F.A.I RTE.	SECTION	COUNTY	TOTAL SHEETS	SHEET NO.
70	82-(1,2)T-17	ST. CLAIR	77	23
FED. ROAD DIST. NO.	ILLINOIS	FED. AID PROJECT		

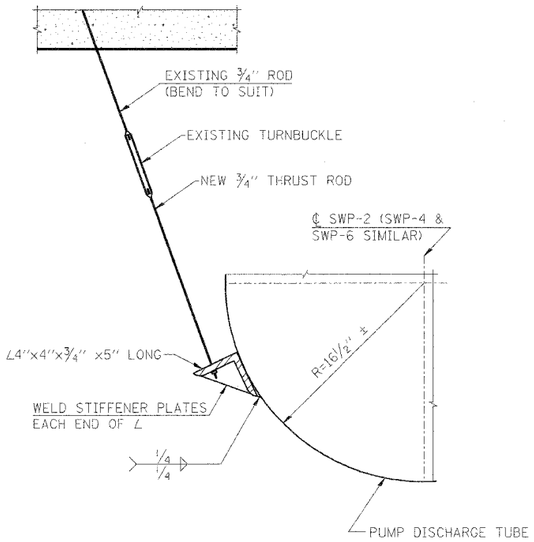

DETAIL A - PUMP BRACE

SCALE: 0' 3" 6" 1'

2 BRACES REQUIRED PER PUMP. TOTAL BRACES REQUIRED 6
TO BE FURNISHED BY PUMP MANUFACTURER.
ALL STEEL SHALL BE HOT DIP GALVANIZED AFTER FABRICATION

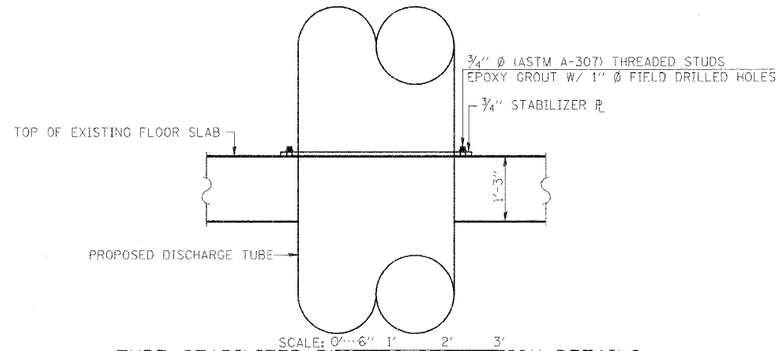

TUBE STABILIZER PLATE INSTALLATION DETAILS

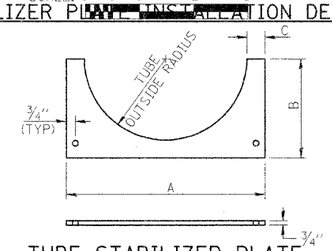

TUBE STABILIZER PLATE

SCALE: 0' 6" 1' 2' 3' (SSP-1 SHOWN)

STABILIZER PLATES TO BE FURNISHED BY PUMP MANUFACTURER.
STEEL SHALL BE HOT DIP GALVANIZED AFTER FABRICATION

LOCATION	FLOOR EL.	A	B	C
SSP-1	393.67	3'-8"	1'-10"	9¼"±
SSP-1	380.0	3'-8"	1'-10"	9¼"±
SWP-2	393.67	4'-6"	2'-3"	9¼"±
SWP-2	380.0	4'-6"	2'-3"	9¼"±
SWP-4	393.67	4'-6"	2'-3"	9¼"±
SWP-4	380.0	4'-6"	2'-3"	9¼"±
SWP-6	393.67	4'-0"	2'-1¾"	6¼"±
SWP-6	380.0	4'-6"	2'-3"	9¼"±

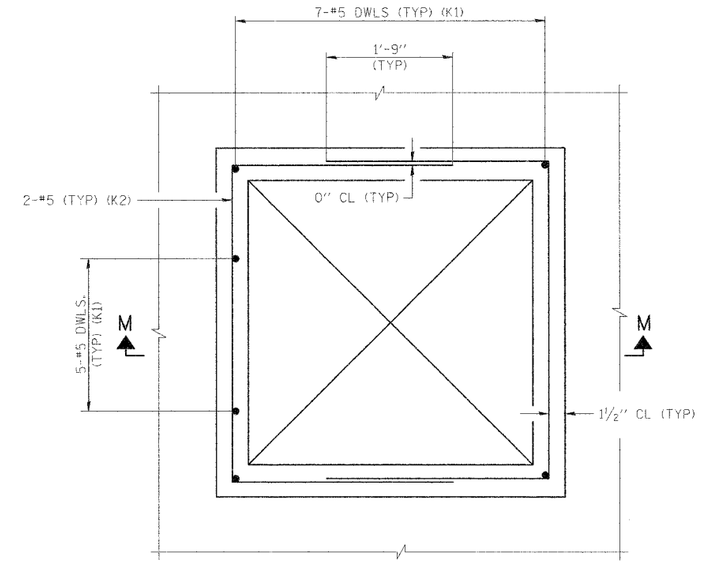

PLAN

(CURB AROUND ROOF OPENING)
SCALE: 0' 6" 1' 2'

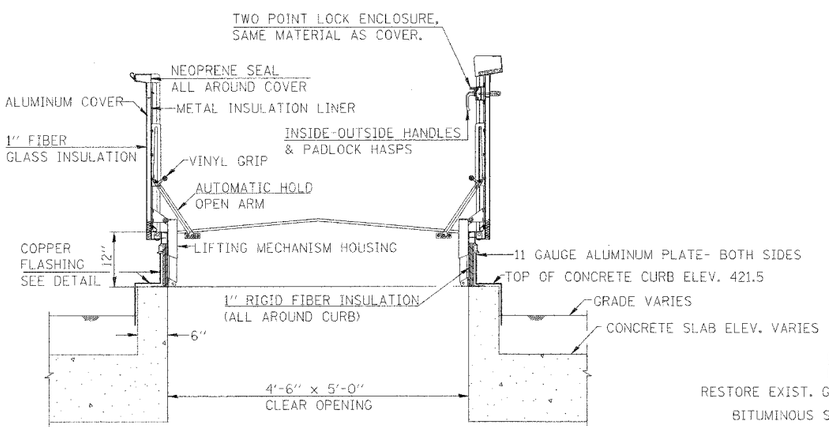

4'-6" X 5'-0" ROOF SCUTTLE OVER EXISTING CURB DETAIL

(AT SWP2 AND SWP5)

SCALE: 0' 6" 1' 2' 3'

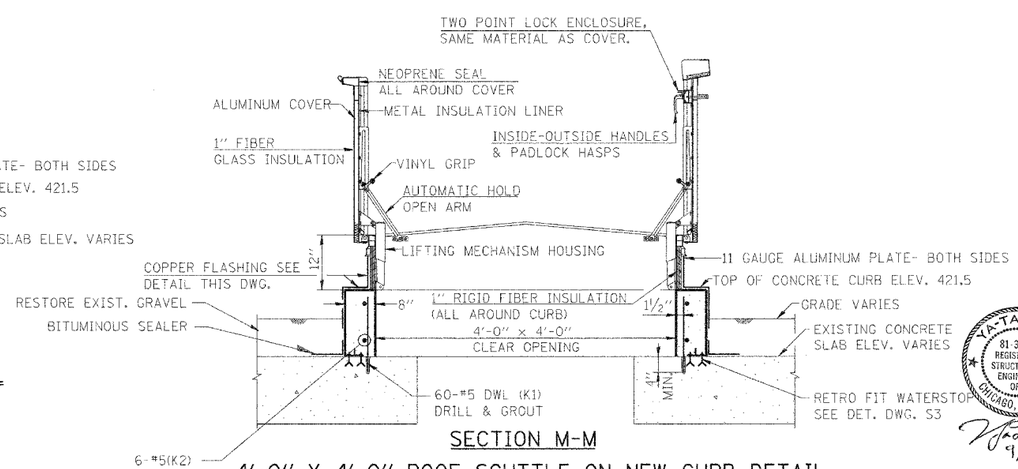

SECTION M-M

4'-0" X 4'-0" ROOF SCUTTLE ON NEW CURB DETAIL

(AT SP1 AND DP1)

SCALE: 0' 6" 1' 2' 3'

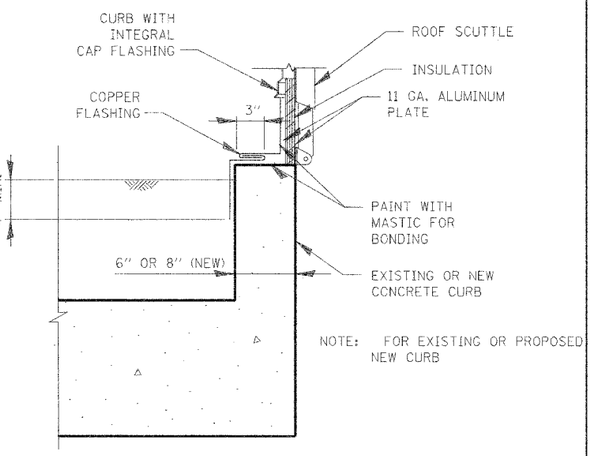

NOTE: FOR EXISTING OR PROPOSED NEW CURB

COPPER FLASHING DETAIL

NTS

YA-TAI LIN
81-3085
REGISTERED STRUCTURAL ENGINEER OF ILLINOIS
CHICAGO, ILLINOIS
9/7/05

ALVORD, BURDICK & HOWSON, L.L.C.
ENGINEERS CHICAGO

S6

REVISIONS	
NAME	DATE

ILLINOIS DEPARTMENT OF TRANSPORTATION

BOWMAN AVENUE PUMP STATION REHABILITATION

MISCELLANEOUS DETAILS

SCALE: AS SHOWN
DATE: 09-12-05
DRAWN BY: JMD
CHECKED BY: KC

PLOT DATE: •DATE-TIME•

PLAN NOTE BOOK NO. ____ SERVICED ___ ___ ___