Notes:
Pour steps monolithically with cap.
Reinforcement bars designated (E) shall be epoxy coated.
Space reinforcement in cap to miss anchor bolts.
For anchor bolt installation details see sheet 11 of 18.
For bar splicer details see sheet 16 of 18.

STATE OF ILLINOIS
DEPARTMENT OF TRANSPORTATION

ROUTE NO.	SECTION	COUNTY	TOTAL SHEETS	SHEET NO.
F.A.S. 1774	113(B-5, B-6)	LOGAN	60	30
FED. ROAD DIST. NO. 7	ILLINOIS	FED. AID PROJECT-		

SHEET NO. 13
18 SHEETS

Contract #72760

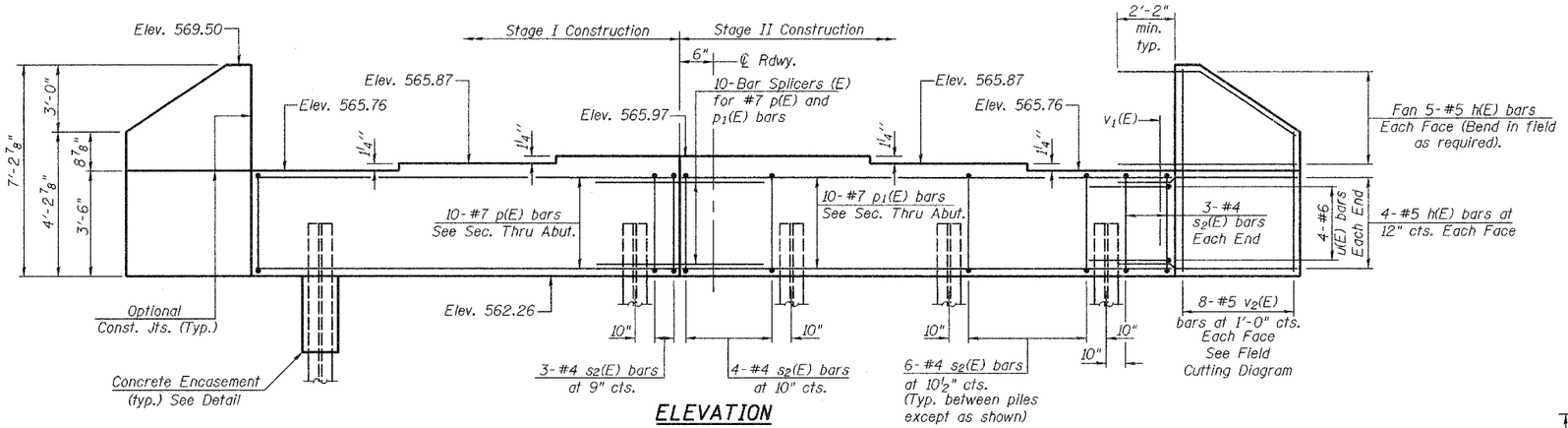

ELEVATION

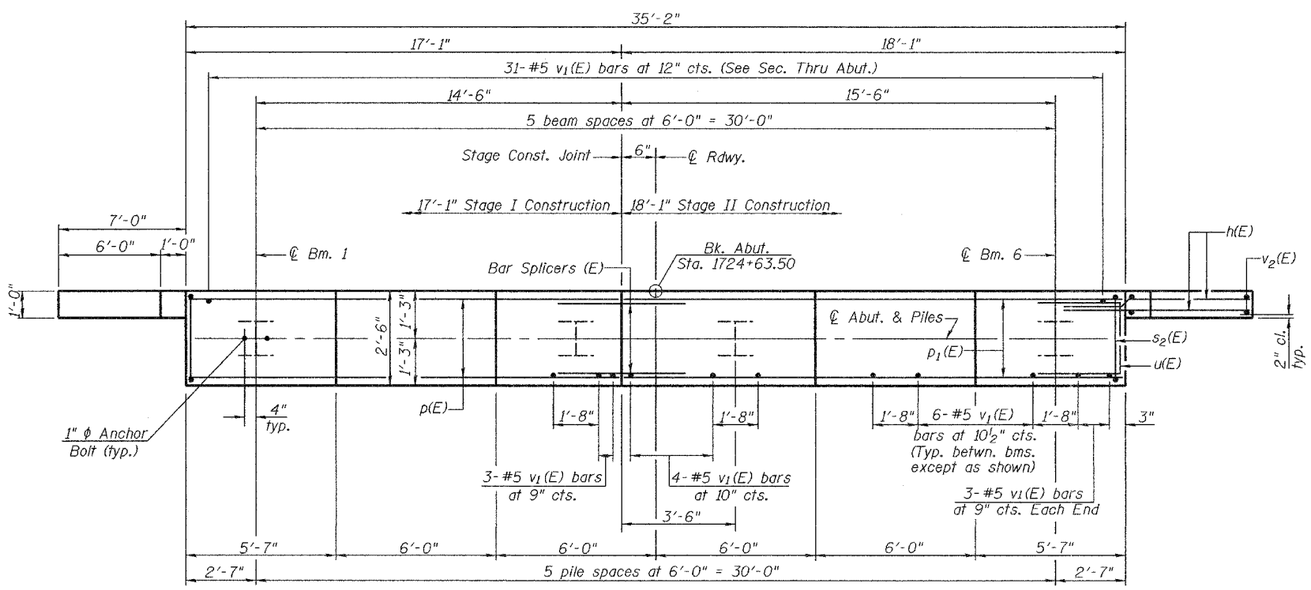

PLAN

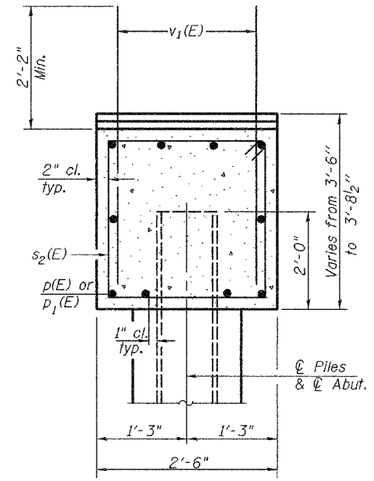

SEC. THRU ABUT.

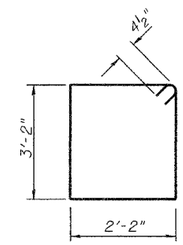

BAR s2(E)

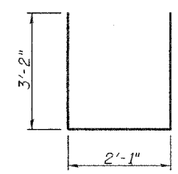

BAR u(E)

BILL OF MATERIAL

Bar	No.	Size	Length	Shape
h(E)	36	#5	10'-0"	
p(E)	10	#7	16'-10"	
p1(E)	10	#7	17'-10"	
s2(E)	37	#4	11'-5"	
u(E)	8	#6	8'-5"	
v1(E)	68	#5	4'-4"	
v2(E)	16	#5	10'-9"	
Concrete Structures			Cu. Yd.	14.9
Reinforcement Bars, Epoxy Coated			pound	1950
Furnishing Steel Piles HP12x53			Foot	285
Driving Steel Piles			Foot	285
Structure Excavation			Cu. Yd.	131.9
Test Pile Steel HP 12x53			Each	1

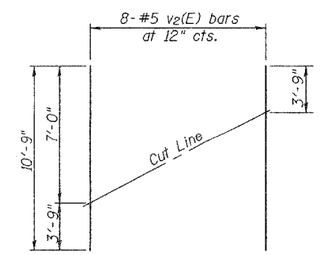

FIELD CUTTING DIAGRAM

Order v2(E) bars full length. Cut as shown and use remainder of bars in opposite face.

PILE DATA

Type: Friction HP12x53
Nominal Required Bearing: 197 Tons
Nominal Design Capacity: 131 Tons
Est. Length: 57'
No. Required: 5+1 Test Pile

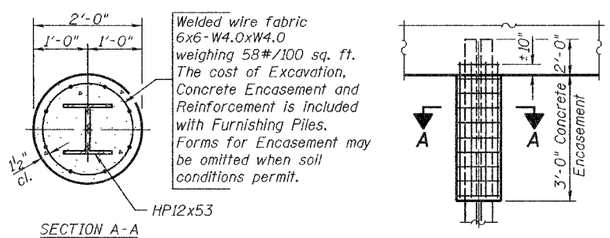

SECTION A-A

PILE ENCASEMENT DETAIL

DESIGNED	Stephen M. Ryan
CHECKED	Chi-Cheung Chau
DRAWN	R. Sommer
CHECKED	SMR/CCC

October 14 2005
EXAMINED Thomas J. Domagalski
ENGINEER OF BRIDGE DESIGN
PASSED Ralph E. Anderson
ENGINEER OF BRIDGES AND STRUCTURES

SOUTH ABUTMENT
F.A.S. RTE. 1774-SEC. 113(B-5,B-6)
LOGAN COUNTY
STATION 1723+50.00
STRUCTURE NO. 054-0505

...\projects\rss00505\0540505.dgn 10/14/2005 9:28:35 AM