ROUTE NO.	SECTION	COUNTY	TOTAL SHEETS	SHEET NO.
F. A. P. 303	129k	WINNEBAGO	585	189
FED. ROAD DIST. NO.	ILLINOIS	FED. AID PROJECT-		
		CONTRACT NO. 64594		

SHEET NO. S10
OF SHEETS S47

STATE OF ILLINOIS
DEPARTMENT OF TRANSPORTATION

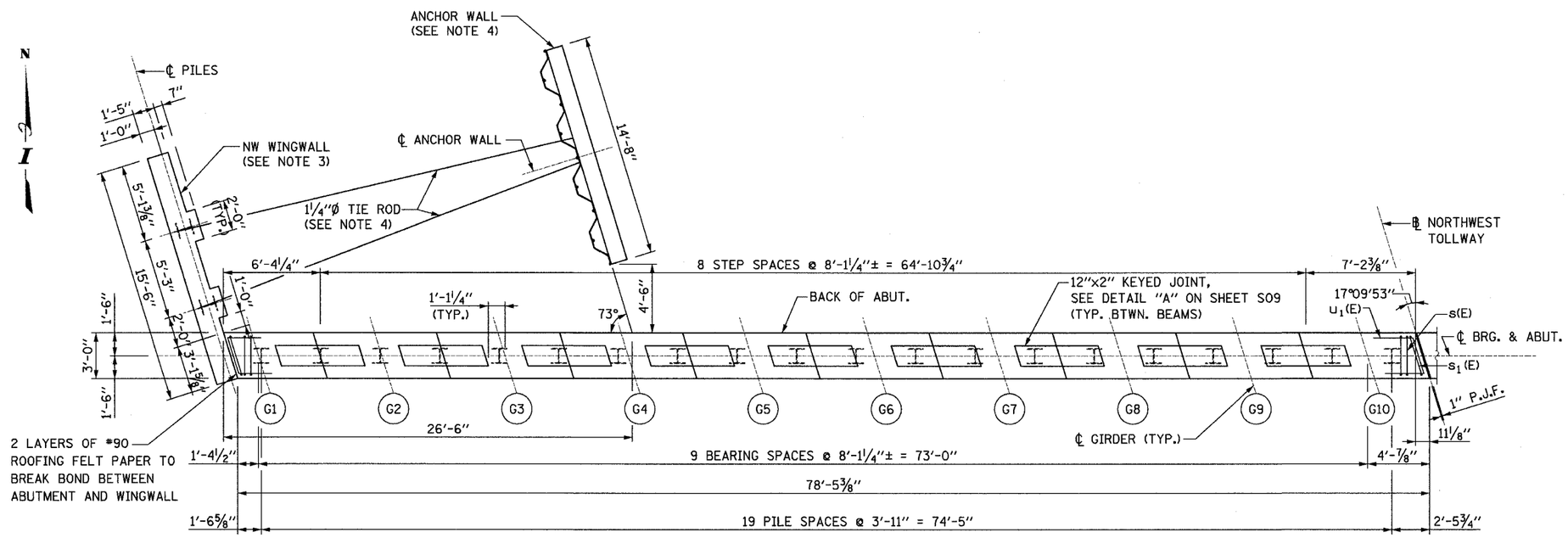

PLAN

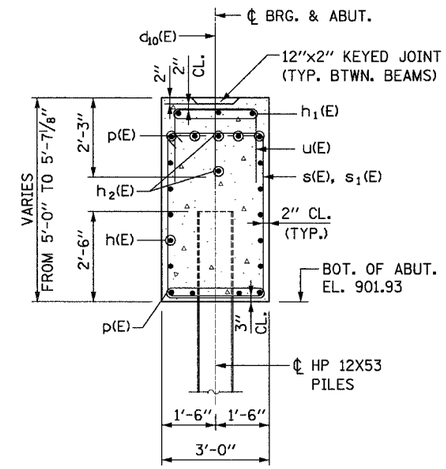

SECTION A-A

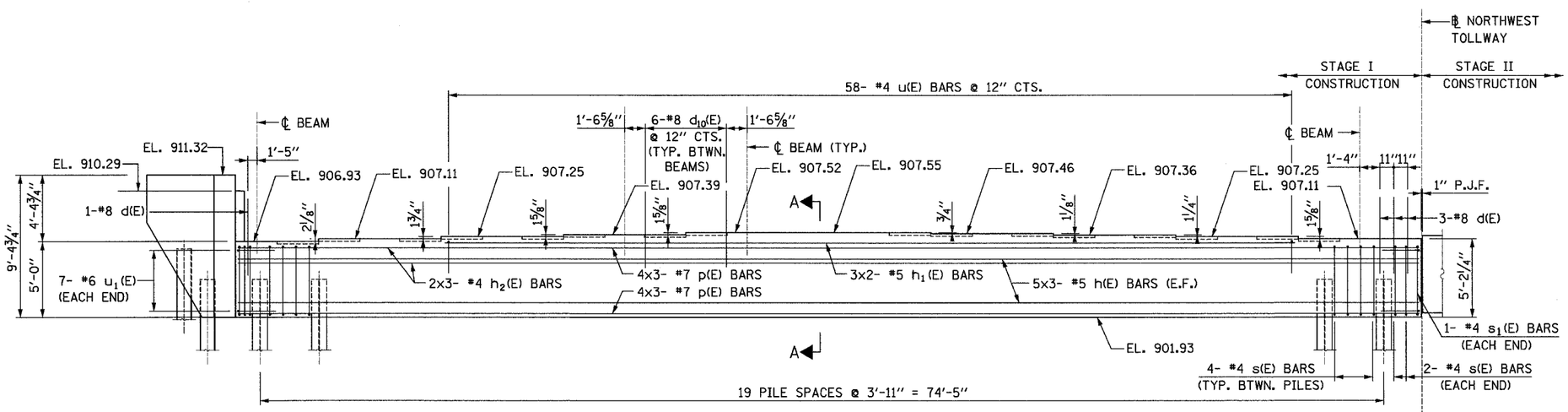

ELEVATION
(LOOKING NORTH)

NOTES:

1. ALL REINFORCEMENT BARS DESIGNATED (E) SHALL BE EPOXY COATED.
2. BARS INDICATED THUS 2X3 -#5 ETC. INDICATES 2 LINE OF BARS WITH 3 LENGTHS PER LINE.
3. FOR BILL OF MATERIAL AND WINGWALL DETAILS, SEE SHEET S11.
4. FOR ANCHOR WALL AND TIE ROD DETAILS, SEE SHEET S15.

DESIGNED	MS
CHECKED	JIG
DRAWN	MS
CHECKED	JIG

PILE DATA

TYPE: STEEL HP 12X53 PILES W/METAL SHOES
DESIGN CAPACITY: 55 TON
DRIVEN CAPACITY: 69 TON
EST. LENGTH: 57'
NO. REQ'D.: 21 PLUS 1 TEST PILE

LEGEND

I - PILE
E.F. - EACH FACE
BOT. - BOTTOM
ABUT. - ABUTMENT
BRG. - BEARING
BTWN. - BETWEEN
P.J.F. - PREFORMED JOINT FILLER

PARSONS BRINCKERHOFF

NORTH ABUTMENT (SB)
N.W. TOLLWAY
OVER IL 173 (F.A.P. ROUTE 303)
SECTION 129K
WINNEBAGO COUNTY
STATION 443+73.62
S.N. 101-9963 (SB) & 101-9964 (NB)
TOLLWAY S.N. 703 (NB) & 704 (SB)

SSDGNSS
SSPRFSS