11-17-2023 LETTING ITEM 095

F.A.P. RTE	SECTION	COUNTY	TOTAL SHEETS	SHEET NO
873	(28-5)K-1	FRANKLIN	162*	1
		ILLINOIS CONTRACT NO. 78814		

* 162 + 1 = 163 TOTAL SHEETS

STATE OF ILLINOIS
DEPARTMENT OF TRANSPORTATION

D-99-069-20

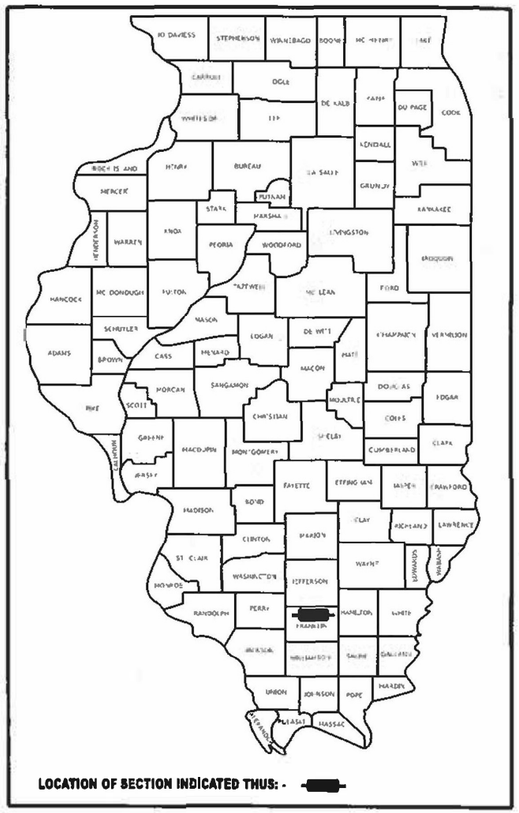

LOCATION OF SECTION INDICATED THUS: -

PROPOSED HIGHWAY PLANS

FAP 873 (IL 149)
SECTION (28-5)K-1
PROJECT NHPP-JH89(002)
ROUNDABOUT
FRANKLIN COUNTY

C99-089-20

FOR INDEX OF SHEETS, SEE SHEET NO. 3

FOR SUMMARY OF QUANTITIES, SEE SHEET NO. 5-14

TRAFFIC DATA
ADT 10400 WITH 3.7% TRUCKS

TOWNSHIP
DENNING

PROJECT ENDS STA. 701+00

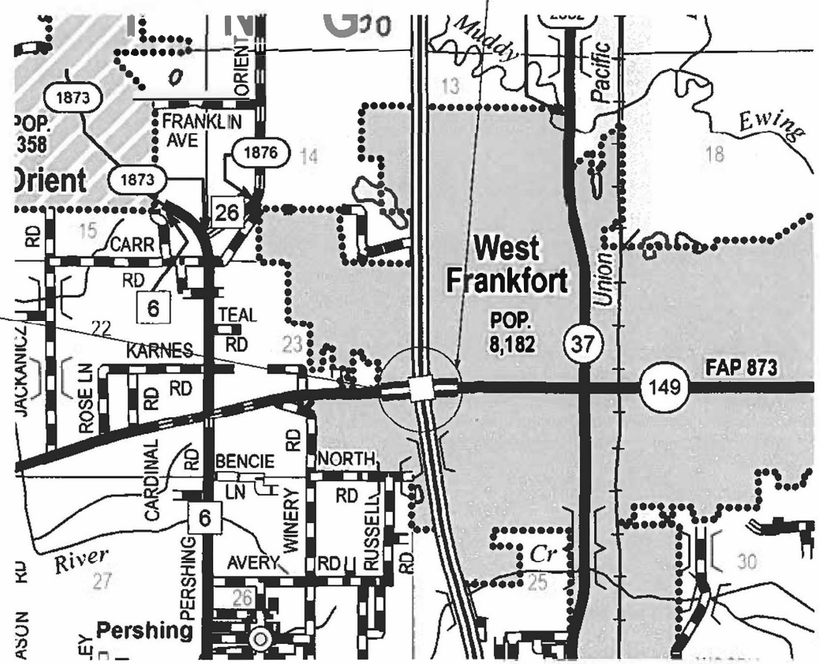

PROJECT BEGINS STA. 682+50

DESIGN DESIGNATION:
1835(23) MINOR ARTERIAL 5.02(PCC-20)

COORDINATE SYSTEM :
EPSG 102671
NAD 1983 STATEPLANE ILLINOIS EAST FIPS 1201 FEET

POSTED SPEED : 35 MPH

J.U.L.I.E.
JOINT UTILITY LOCATION INFORMATION FOR EXCAVATION
1-800-892-0123
OR 811

GROSS LENGTH = 1850 FT. = 0.35 MILES
NET LENGTH = 1850 FT. = 0.35 MILES

STATE OF ILLINOIS
DEPARTMENT OF TRANSPORTATION

SUBMITTED May 15 2023
Kirk H. Brown
REGION FIVE ENGINEER

October 13, 2023
ENGINEER OF DESIGN AND ENVIRONMENT

October 13, 2023
Stephen M. Travis
DIRECTOR OF HIGHWAYS PROJECT IMPLEMENTATION

PROJECT ENGINEER: SUSAN POE
PROJECT DESIGNER: CHRIS RUSSELL

CONTRACT NO. 78814

PRINTED BY THE AUTHORITY OF THE STATE OF ILLINOIS

REV. - MS

Prepared By: Charles Stein
DISTRICT STUDIES & PLANS ENGINEER

Examined By: Nancy Lee
DISTRICT LAND ACQUISITION ENGINEER

Examined By: Connie Nelson
DISTRICT PROGRAM DEVELOPMENT ENGINEER

Examined By: R G B
DISTRICT OPERATIONS ENGINEER

Examined By: Doug Juergens
DISTRICT PROJECT IMPLEMENTATION ENGINEER

Examined By: Doug Juergens
DISTRICT CONSTRUCTION ENGINEER

Examined By: Aaron Hargis
DISTRICT MATERIALS ENGINEER

USER NAME = Tristen Reid	DESIGNED -	REVISED -	
	DRAWN -	REVISED -	
PLOT SCALE = 0.16666633 ' / in.	CHECKED -	REVISED -	
PLOT DATE = 5/9/2023	DATE -	REVISED -	

STATE OF ILLINOIS
DEPARTMENT OF TRANSPORTATION

SIGNATURE SHEET

SCALE: SHEET 2 OF 47 SHEETS STA. TO STA.

F.A.P. RTE.	SECTION	COUNTY	TOTAL SHEETS	SHEET NO.
873	(28-5)K-1	FRANKLIN	47	2

CONTRACT NO. 78814

ILLINOIS FED. AID PROJECT

MODEL: Signature | Sheet
FILE NAME: pw:\\ildot-pw.bentley.com:PWIDOT\Documents\IDOT Offices\District 9\ORD Projects\78814\C-LD\Plan\C-Sheets\D78814-Sht-Cover_Sig.dgn

INDEX OF SHEETS

HIGHWAY STANDARDS

000001-08_STANDARDSYMBOLSABBREVIATIONS-PATTERNS-001
001001-02_AREASOFREINFREBARS
001006_DECIMALOFINCH-FOOT
280001-07_TEMPEROSIONCNTRLSYSTEMS
420001-10_PAVEMENTJOINTS
420101-07_24FTJOINTEDPCCPVMT

424001-11_PERPENDICULARCURBRAMPS
424031-02_MEDIANPEDESTRIANCROSSINGS
483001-06_PCCSHLD
542301-03_PRECASTREINFCONCFLAREDENDSECT
602306-03_INLET-TYPEB
602601-06_PRECASTREINFCONCFLATSLABTOP
604006-05_FRAME-GRATETYPE3
604061-03_FRAME-GRATETYPE12
606001-08_CONCCURBTYPEB-COMBOCONCC-G
606006-04_OUTLETSFORCONCC-G-TYPEB-6.24
606301-04_PCCISLANDS-MEDIANS
630301-09_SHLDWIDENFORTYPE1GRDRAILTERMS
631031-18_TRAFBARTERMTYPE6
701101-05_OFFRDOP-MULTILN-LESSTHAN15FTTOEOP
701106-02_OFFRDOP-MULTILN-MORETHAN15FTAWAY
701311-03_LNCLOSURE2L2W-MOVINGOPDAYONLY
701400-11_APPRCHTOLNCLOSURE-FRWAYEXPWAY
701401-13_LNCLOSUREFRWAYEXPWAY
701428-01_TRAFFICCONTROLSETUPREMOVALFREEWAYEXPRESSWAY
701446-11_TWOLNCLOSURE-FRWAYEXPWAY-284
701451-05_RAMPCLOSUREFREEWAYEXP
701502-09_URBANLNCLOSURE2L2WWITHBIDIRECTLEFTTURNLN
701601-09_URBANLNCLOSUREMULTILN1W2WWITHNONTRVSABLEMED
701801-06_SIDEWALKCORNERORCROSSWALKCLOSURE
701901-08_TRAFCNTRLDEVICES
704001-08_TEMPCONCBARRIER
720001-01_SIGNPANELMOUNTDETAILS
720006-04_SIGNPANELERECTDETAILS

720021-03_SIGNPANELS-EXTRUDEDALUMTYPE
725001-01_OBJECTANDTERMINALMARKERS
728001-01_TELESCOPINGSTEELSIGNSUPPORT
731001-01_BASEFORTELESCOPINGSTEELSIGNSUPPORT
780001-05_TYPICALPVMTMRKINGS
781001-04_TYPICALAPPRAISEDREFLCPVMTMRKRS
782001-01_CURBREFLECTORS
782006-01_GUARDRAILANDBARRIERWALLREFLECTORMOUNTINGDEATILS
805001-01_ELECSRVCINSTALLDETAILS
821101-02_LUMINAIRE WIRING IN POLE
825026-04_LIGHTINGCONTROLLERBASEMOUNT480V
830006-05_LIGHTPOLEALUMINUMDAVITARM
836001-04_LIGHTPOLEFOUNDATION
836011-02_LIGHTPOLEFOUNDATIONWITH44INCONCBARRIER
838001-01_BREAKAWAYDEVICES
BLR21-9_TYPAPPTRAFCNTRLDEVICES-CONSTRONRURALLOCALHWYS

REV. - MS

MODEL: Index [Sheet]
FILE NAME: pw://bdc-pw.bentley.com:PWIDOT/Documents/IDOT Offices/District 8/ORD Projects/78814/CADData/CADsheets/D978814-SHB-Index_GenNotes.dgn

USER NAME = Tristen.Reid	DESIGNED -	REVISED -	
	DRAWN -	REVISED -	
PLOT SCALE = 0.16666633 ' / in.	CHECKED -	REVISED -	
PLOT DATE = 8/24/2023	DATE -	REVISED -	

STATE OF ILLINOIS
DEPARTMENT OF TRANSPORTATION

INDEX OF SHEETS
HIGHWAY STANDARDS

SCALE: | SHEET 3 OF 50 SHEETS | STA. | TO STA.

F.A.P RTE.	SECTION	COUNTY	TOTAL SHEETS	SHEET NO.
873	(28-5)K-1	FRANKLIN	162	3

CONTRACT NO. 78814

ILLINOIS | FED. AID PROJECT

Locations	Temporary Pavement – Top Lift
Mixture Use(s):	Hot-Mix Asphalt Surface Course, Mix-D, N70
PG:	PG64-22
Design Air Voids:	4.0 %, 70 Gyration Design
Mixture Composition: (Gradation Mixture)	9.5mm
Friction Aggregate:	Mix D
Mixture Weight:	112 lbs./Sq Yd/in
Quality Management Program:	QC/QA
Sublot Size:	3000 ton
Material Transfer Device	No

Locations	Stabilized Subbase 4", Temporary Pavement – Lower Lifts
Mixture Use(s):	Hot-Mix Asphalt Binder Course, N70, IL-19.0
PG:	PG64-22
Design Air Voids:	4.0 %, 70 Gyration Design
Mixture Composition: (Gradation Mixture)	IL-19.0 mm
Friction Aggregate:	None
Mixture Weight:	112 lbs./Sq Yd/in
Quality Management Program:	QC/QA
Sublot Size:	3000 ton
Material Transfer Device	No

GENERAL NOTES

FACTORS USED FOR ESTIMATING PLAN QUANTITIES ARE AS FOLLOWS AND SHALL NOT BE USED FOR THE BASIS OF FINAL QUANTITIES:

ALL AGGREGATE	2.05 TONS/CU. YD.
RIPRAP	1.50 TONS/CU. YD.

TRENCH BACKFILL REQUIRED FOR STORM SEWER, SANITARY SEWER, OR WATER MAINS SHALL ONLY BE PLACED UP TO ONE FOOT BELOW THE FINAL GRADE IN AREAS HAVING A PROPOSED GRASS OR SOD SURFACE.

THE PROPOSED LIGHT POLE FOUNDATION SHALL BE FLUSH WITH EXISTING SURFACE.

REMOVAL OF ABANDONED UTILITIES SHALL BE INCLUDED IN THE COST OF EARTH EXCAVATION

DUE TO THE PRESENCE OF ENDAGERED/THREATENED SPECIES OR HABITAT, CLEARING OF TREES SHALL BE PROHIBITED FROM APRIL 1 THROUGH SEPTEMBER 30.

PAYMENT FOR TIEBARS AND DOWEL BARS SHALL BE INCLUDED IN THE COST OF THE PROPOSED PAVEMENT AND/OR COMBINATION CURB AND GUTTER.

ALL AGGREGATE SHOWN ON STANDARD 606301 SHALL NOT BE PAID FOR SEPARATELY BUT SHALL BE INCLUDED IN THE UNIT PRICE FOR STAMPED COLORED PORTLAND CEMENT CONCRETE MEDIAN SURFACE, 4 INCH.

THE REMOVAL OF RIP-RAP IN EXISTING DITCHES SHALL BE INCLUDED IN THE COST OF EARTH EXCAVATION.

CONNECTING OF NEW OR EXISTING STORM SEWERS TO NEW OR EXISTING INLETS OR MANHOLES SHALL BE MADE IN A MANNER WHICH RESULTS IN A NEAT AND WATERTIGHT JOINT. WHEN PLAVED THROUGH THE WALL OF AN INLET OR MANHOLE, STORM SEWER PIPE SHALL BE PLAVED OR CUT FLUSH WITH THE FACE OF THE WALL AND DRESSED WITH MORTAR TO PROVIDE A SMOOTH ROUNDED OR BEVELED EDGE. THIS WORK WILL NOT BE PAID FOR SEPARATELY, BUT SHALL BE CONSTRUCTED AS INCLUDED IN THE CONTRACT UNIT PRICES OF THE STORM SEWERS OR STRUCTERS INVOLVED.

AT ALL LOCATIONS WHERE THE PROPOSED HOT MIX ASPHALT OR CONCRETE PAVEMENT JOINS AN EXISTING HOT MIX ASPHALT OR CONCRETE PAVEMENT, A FULL DEPTH SAWED JOINT SHALL BE CONSTRUCTED. THE COST OF THIS JOINT WILL BE INCLUDED IN THE COST OF THE TYPE OF PAVEMENT BEING CONSTRUCTED.

REV. - MS

SUMMARY OF QUANTITIES

CODE NUMBER	ITEM DESCRIPTION	UNIT	TOTAL QUANTITY	FRANKLIN CO IL 149 90% FEDERAL 10% STATE RURAL ROADWAY 0004	FRANKLIN CO IL 149 90% FEDERAL 10% STATE RURAL LIGHTING 0021	FRANKLIN CO IL 149 90% FEDERAL 10% STATE RURAL BRIDGE 0059
20200100	EARTH EXCAVATION	CU YD	6,879	6,879		
20800150	TRENCH BACKFILL	CU YD	481	481		
25000115	SEEDING, CLASS 1B	ACRE	2.19	2.19		
25000350	SEEDING, CLASS 7	ACRE	2.19	2.19		
25000400	NITROGEN FERTILIZER NUTRIENT	POUND	204	204		
25000500	PHOSPHORUS FERTILIZER NUTRIENT	POUND	204	204		
25000600	POTASSIUM FERTILIZER NUTRIENT	POUND	204	204		
25000700	AGRICULTURAL GROUND LIMESTONE	TON	4.38	4.38		
25100115	MULCH, METHOD 2	ACRE	4.38	4.38		
25100630	EROSION CONTROL BLANKET	SQ YD	1,646	1,646		
28000250	TEMPORARY EROSION CONTROL SEEDING	POUND	657	657		
28000305	TEMPORARY DITCH CHECKS	FOOT	480	480		
28000400	PERIMETER EROSION BARRIER	FOOT	3,533	3,533		
28100107	STONE RIPRAP, CLASS A4	SQ YD	44	44		

REV. - MS

SUMMARY OF QUANTITIES - CONT

CODE NUMBER	ITEM DESCRIPTION	UNIT	TOTAL QUANTITY	FRANKLIN CO IL 149 90% FEDERAL 10% STATE RURAL ROADWAY 0004	FRANKLIN CO IL 149 90% FEDERAL 10% STATE RURAL LIGHTING 0021	FRANKLIN CO IL 149 90% FEDERAL 10% STATE RURAL BRIDGE 0059
31100910	SUBBASE GRANULAR MATERIAL, TYPE A 12"	SQ YD	17,515	17,515		
31200100	STABILIZED SUBBASE 4"	SQ YD	16,833	16,833		
42000401	PORTLAND CEMENT CONCRETE PAVEMENT 9" (JOINTED)	SQ YD	11,686	11,686		
42001300	PROTECTIVE COAT	SQ YD	20,868	20,868		
42400200	PORTLAND CEMENT CONCRETE SIDEWALK 5 INCH	SQ FT	23,517	23,517		
42400800	DETECTABLE WARNINGS	SQ FT	300	300		
44000100	PAVEMENT REMOVAL	SQ YD	13,306	13,306		
44000500	COMBINATION CURB AND GUTTER REMOVAL	FOOT	1,652	1,652		
44003100	MEDIAN REMOVAL	SQ FT	17,062	15,558		1,504
44004250	PAVED SHOULDER REMOVAL	SQ YD	1,729	1,729		
48102100	AGGREGATE WEDGE SHOULDER, TYPE B	TON	19	19		
48300400	PORTLAND CEMENT CONCRETE SHOULDERS 9"	SQ YD	895	895		
50102400	CONCRETE REMOVAL	CU YD	22.6			22.6
50104400	CONCRETE HEADWALL REMOVAL	EACH	5	5		

REV. - MS

SUMMARY OF QUANTITIES - CONT

CODE NUMBER	ITEM DESCRIPTION	UNIT	TOTAL QUANTITY	FRANKLIN CO IL 149 90% FEDERAL 10% STATE RURAL ROADWAY 0004	FRANKLIN CO IL 149 90% FEDERAL 10% STATE RURAL LIGHTING 0021	FRANKLIN CO IL 149 90% FEDERAL 10% STATE RURAL BRIDGE 0059
50105220	PIPE CULVERT REMOVAL	FOOT	50	50		
50157300	PROTECTIVE SHIELD	SQ YD	277			277
50300100	FLOOR DRAINS	EACH	2			2
50300225	CONCRETE STRUCTURES	CU YD	40.7			40.7
50300255	CONCRETE SUPERSTRUCTURE	CU YD	68.1			68.1
50300260	BRIDGE DECK GROOVING	SQ YD	1,615			1,615
50300300	PROTECTIVE COAT	SQ YD	2,287			2,287
50301350	CONCRETE SUPERSTRUCTURE (APPROACH SLAB)	CU YD	130.2			130.2
50800105	REINFORCEMENT BARS	POUND	1,616	1,616		
50800205	REINFORCEMENT BARS, EPOXY COATED	POUND	66,080			66,080
50800515	BAR SPLICERS	EACH	244			244
50901720	BICYCLE RAILING	FOOT	44			44
50901730	BRIDGE FENCE RAILING	FOOT	512	96		416
50901750	PARAPET RAILING	FOOT	250			250

REV. - MS

SUMMARY OF QUANTITIES - CONT

CODE NUMBER	ITEM DESCRIPTION	UNIT	TOTAL QUANTITY	FRANKLIN CO IL 149 90% FEDERAL 10% STATE RURAL ROADWAY 0004	FRANKLIN CO IL 149 90% FEDERAL 10% STATE RURAL LIGHTING 0021	FRANKLIN CO IL 149 90% FEDERAL 10% STATE RURAL BRIDGE 0059
52000110	PREFORMED JOINT STRIP SEAL	FOOT	157			157
54213660	PRECAST REINFORCED CONCRETE FLARED END SECTIONS 15"	EACH	6	6		
54213681	PRECAST REINFORCED CONCRETE FLARED END SECTIONS 36"	EACH	3	3		
54248510	CONCRETE COLLAR	CU YD	1.32	1.32		
550A0070	STORM SEWERS, CLASS A, TYPE 1 15"	FOOT	470	470		
550A0160	STORM SEWERS, CLASS A, TYPE 1 36"	FOOT	70	70		
55100500	STORM SEWER REMOVAL 12"	FOOT	165	165		
55100700	STORM SEWER REMOVAL 15"	FOOT	765	765		
60240220	INLETS, TYPE B, TYPE 3 FRAME AND GRATE	EACH	6	6		
60240315	INLETS, TYPE B, TYPE 12 FRAME AND GRATE	EACH	2	2		
60500040	REMOVING MANHOLES	EACH	2	2		
60500060	REMOVING INLETS	EACH	7	7		
60600095	CLASS SI CONCRETE (OUTLET)	CU YD	23	23		
60600605	CONCRETE CURB, TYPE B	FOOT	620	620		

REV. - MS

MODEL: SOQ 4 [Sheet]
FILE NAME: pw://ildot-pw.bentley.com:PWIDOT/Documents/IDOT Offices/District 8/ORD Projects/78814/CAD/data/CAD/sheets/0278814-SHC-SoQ.dgn

USER NAME = Tristan.Reid	DESIGNED -	REVISED -	
	DRAWN -	REVISED -	
PLOT SCALE = 0.16666633 ' / in.	CHECKED -	REVISED -	
PLOT DATE = 8/24/2023	DATE -	REVISED -	

STATE OF ILLINOIS
DEPARTMENT OF TRANSPORTATION

SUMMARY OF QUANTITIES

SCALE: | SHEET 8 OF 50 SHEETS | STA. TO STA.

F.A.P RTE.	SECTION	COUNTY	TOTAL SHEETS	SHEET NO.
873	(28-5)K-1	FRANKLIN	162	8
		CONTRACT NO. 78814		
	ILLINOIS	FED. AID PROJECT		

SUMMARY OF QUANTITIES - CONT

	CODE NUMBER	ITEM DESCRIPTION	UNIT	TOTAL QUANTITY	FRANKLIN CO IL 149 90% FEDERAL 10% STATE RURAL ROADWAY 0004	FRANKLIN CO IL 149 90% FEDERAL 10% STATE RURAL LIGHTING 0021	FRANKLIN CO IL 149 90% FEDERAL 10% STATE RURAL BRIDGE 0059
	60605000	COMBINATION CONCRETE CURB AND GUTTER, TYPE B-6.24	FOOT	3,040	3,040		
	60608582	COMBINATION CONCRETE CURB AND GUTTER, TYPE M-4.24	FOOT	353	353		
	60610400	COMBINATION CONCRETE CURB AND GUTTER, TYPE M-6.24	FOOT	2,000	2,000		
	60622400	CONCRETE MEDIAN, TYPE SM-6.06	SQ FT	1,235	1,235		
*	63100085	TRAFFIC BARRIER TERMINAL, TYPE 6	EACH	2	2		
*	63100167	TRAFFIC BARRIER TERMINAL, TYPE 1 (SPECIAL) TANGENT	EACH	2	2		
	63200310	GUARDRAIL REMOVAL	FOOT	120	120		
*	66900200	NON-SPECIAL WASTE DISPOSAL	CU YD	260	260		
*	66900530	SOIL DISPOSAL ANALYSIS	EACH	3	3		
*	66901001	REGULATED SUBSTANCES PRE-CONSTRUCTION PLAN	L SUM	1	1		
*	66901003	REGULATED SUBSTANCES FINAL CONSTRUCTION REPORT	L SUM	1	1		
*	66901006	REGULATED SUBSTANCES MONITORING	CAL DA	2	2		
	67000400	ENGINEER'S FIELD OFFICE, TYPE A	CAL MO	13	13		
	67100100	MOBILIZATION	L SUM	1	1		

* SPECIALTY ITEM

REV. - MS

SUMMARY OF QUANTITIES - CONT

CODE NUMBER	ITEM DESCRIPTION	UNIT	TOTAL QUANTITY	FRANKLIN CO IL 149 90% FEDERAL 10% STATE RURAL ROADWAY 0004	FRANKLIN CO IL 149 90% FEDERAL 10% STATE RURAL LIGHTING 0021	FRANKLIN CO IL 149 90% FEDERAL 10% STATE RURAL BRIDGE 0059
70100800	TRAFFIC CONTROL AND PROTECTION, STANDARD 701401	L SUM	1			1
70100815	TRAFFIC CONTROL AND PROTECTION, STANDARD 701446	L SUM	1			1
70102640	TRAFFIC CONTROL AND PROTECTION, STANDARD 701801	L SUM	1	1		
70107025	CHANGEABLE MESSAGE SIGN	CAL DA	150	150		
70200100	NIGHTTIME WORK ZONE LIGHTING	L SUM	1	1		
70300100	SHORT TERM PAVEMENT MARKING	FOOT	640	640		
70300150	SHORT TERM PAVEMENT MARKING REMOVAL	SQ FT	9,396	9,396		
70303100	TEMPORARY PAVEMENT MARKING LETTERS AND SYMBOLS - MODIFIED URETHANE	SQ FT	883	883		
70303120	TEMPORARY PAVEMENT MARKING - LINE 4" - MODIFIED URETHANE	FOOT	6,445	6,445		
70303140	TEMPORARY PAVEMENT MARKING - LINE 8" - MODIFIED URETHANE	FOOT	1,164	1,164		
70303160	TEMPORARY PAVEMENT MARKING - LINE 12" - MODIFIED URETHANE	FOOT	500	500		
70303190	TEMPORARY PAVEMENT MARKING - LINE 18" - MODIFIED URETHANE	FOOT	170	170		
70400100	TEMPORARY CONCRETE BARRIER	FOOT	250			250
70400125	PINNING TEMPORARY CONCRETE BARRIER	EACH	12			12

REV. - MS

MODEL: SOQ 6 [Sheet]
FILE NAME: pw://ildot-pw.bentley.com:PWIDOT/Documents/IDOT Offices/District 8/ORD Projects/78814/CAD/data/CAD sheets/0978814-SHC-SoQ.dgn

USER NAME = Tristan.Reid	DESIGNED -	REVISED -	
	DRAWN -	REVISED -	
PLOT SCALE = 0.16666633 ' / in.	CHECKED -	REVISED -	
PLOT DATE = 8/24/2023	DATE -	REVISED -	

STATE OF ILLINOIS
DEPARTMENT OF TRANSPORTATION

SUMMARY OF QUANTITIES

SCALE: | SHEET 10 OF 50 SHEETS | STA. TO STA.

F.A.P RTE.	SECTION	COUNTY	TOTAL SHEETS	SHEET NO.
873	(28-5)K-1	FRANKLIN	162	10
		CONTRACT NO. 78814		
	ILLINOIS	FED. AID PROJECT		

SUMMARY OF QUANTITIES - CONT

	CODE NUMBER	ITEM DESCRIPTION	UNIT	TOTAL QUANTITY	FRANKLIN CO IL 149 90% FEDERAL 10% STATE RURAL ROADWAY 0004	FRANKLIN CO IL 149 90% FEDERAL 10% STATE RURAL LIGHTING 0021	FRANKLIN CO IL 149 90% FEDERAL 10% STATE RURAL BRIDGE 0059
*	72000100	SIGN PANEL - TYPE 1	SQ FT	383	383		
*	72000300	SIGN PANEL - TYPE 3	SQ FT	906	906		
*	72400310	REMOVE SIGN PANEL - TYPE 1	SQ FT	18	18		
*	72400330	REMOVE SIGN PANEL - TYPE 3	SQ FT	612	612		
*	72400710	RELOCATE SIGN PANEL - TYPE 1	SQ FT	10	10		
*	72400730	RELOCATE SIGN PANEL - TYPE 3	SQ FT	176	176		
*	72501000	TERMINAL MARKER - DIRECT APPLIED	EACH	2	2		
*	72700100	STRUCTURAL STEEL SIGN SUPPORT - BREAKAWAY	POUND	6,426	6,426		
*	72800100	TELESCOPING STEEL SIGN SUPPORT	FOOT	483	483		
*	73000100	WOOD SIGN SUPPORT	FOOT	354	354		
*	73100100	BASE FOR TELESCOPING STEEL SIGN SUPPORT	EACH	29	29		
*	73400100	CONCRETE FOUNDATIONS	CU YD	16	16		
	73700100	REMOVE GROUND MOUNTED SIGN SUPPORT	EACH	16	16		
	73700200	REMOVE CONCRETE FOUNDATION - GROUND MOUNT	EACH	16	16		
*	78009000	MODIFIED URETHANE PAVEMENT MARKING - LETTERS AND SYMBOLS	SQ FT	883	883		
*	78009004	MODIFIED URETHANE PAVEMENT MARKING - LINE 4"	FOOT	6,445	6,445		

* SPECIALTY ITEM

REV. - MS

MODEL: SOQ 7 [Sheet]
FILE NAME: pw://ildot-pw.bentley.com:PWIDOT/Documents/IDOT Offices/District 8/ORD Projects/78814/CAD/data/CAD sheets/0978814-SHC-SoQ.dgn

USER NAME = Tristan.Reid	DESIGNED -	REVISED -	
	DRAWN -	REVISED -	
PLOT SCALE = 0.16666633 ' / in.	CHECKED -	REVISED -	
PLOT DATE = 8/24/2023	DATE -	REVISED -	

STATE OF ILLINOIS
DEPARTMENT OF TRANSPORTATION

SUMMARY OF QUANTITIES

SCALE: | SHEET 11 OF 50 SHEETS | STA. TO STA.

F.A.P RTE.	SECTION	COUNTY	TOTAL SHEETS	SHEET NO.
873	(28-5)K-1	FRANKLIN	162	11
		CONTRACT NO. 78814		
	ILLINOIS	FED. AID PROJECT		

SUMMARY OF QUANTITIES - CONT

	CODE NUMBER	ITEM DESCRIPTION	UNIT	TOTAL QUANTITY	FRANKLIN CO IL 149 90% FEDERAL 10% STATE RURAL ROADWAY 0004	FRANKLIN CO IL 149 90% FEDERAL 10% STATE RURAL LIGHTING 0021	FRANKLIN CO IL 149 90% FEDERAL 10% STATE RURAL BRIDGE 0059
*	78009008	MODIFIED URETHANE PAVEMENT MARKING - LINE 8"	FOOT	1,164	1,164		
*	78009012	MODIFIED URETHANE PAVEMENT MARKING - LINE 12"	FOOT	500	500		
*	78009018	MODIFIED URETHANE PAVEMENT MARKING - LINE 18"	FOOT	170	170		
*	78011000	GROOVING FOR RECESSED PAVEMENT MARKING, LETTERS AND SYMBOLS	SQ FT	883	883		
*	78011025	GROOVING FOR RECESSED PAVEMENT MARKING 5"	FOOT	6,445	6,445		
*	78011045	GROOVING FOR RECESSED PAVEMENT MARKING 9"	FOOT	1,164	1,164		
*	78011065	GROOVING FOR RECESSED PAVEMENT MARKING 13"	FOOT	500	500		
*	78011095	GROOVING FOR RECESSED PAVEMENT MARKING 19"	FOOT	170	170		
*	78100100	RAISED REFLECTIVE PAVEMENT MARKER	EACH	40	40		
*	78200020	CURB REFLECTORS	EACH	30	30		
	78300201	PAVEMENT MARKING REMOVAL - GRINDING	SQ FT	4,034	4,034		
*	80400100	ELECTRIC SERVICE INSTALLATION	EACH	1		1	
*	81028370	UNDERGROUND CONDUIT, PVC, 3" DIA.	FOOT	295		295	
*	81603040	UNIT DUCT, 600V, 2-1C NO.6, 1/C NO.8 GROUND, (XLP-TYPE USE), 1" DIA. POLYETHYLENE	FOOT	4,335		4,335	

* SPECIALTY ITEM

REV. - MS

MODEL: SOQ 8 [Sheet]
FILE NAME: pw://ildot-pw.bentley.com:PWIDOT/Documents/IDOT Offices/District 8/ORD Projects/78814/CADData/CADsheets/0278814-SHC-SoQ.dgn

USER NAME = Tristan.Reid	DESIGNED -	REVISED -	
	DRAWN -	REVISED -	
PLOT SCALE = 0.16666633 ' / in.	CHECKED -	REVISED -	
PLOT DATE = 8/24/2023	DATE -	REVISED -	

STATE OF ILLINOIS
DEPARTMENT OF TRANSPORTATION

SUMMARY OF QUANTITIES

SCALE: | SHEET 12 OF 50 SHEETS | STA. TO STA.

F.A.P RTE.	SECTION	COUNTY	TOTAL SHEETS	SHEET NO.
873	(28-5)K-1	FRANKLIN	162	12
		CONTRACT NO. 78814		
	ILLINOIS	FED. AID PROJECT		

SUMMARY OF QUANTITIES - CONT

	CODE NUMBER	ITEM DESCRIPTION	UNIT	TOTAL QUANTITY	FRANKLIN CO IL 149 90% FEDERAL 10% STATE RURAL ROADWAY 0004	FRANKLIN CO IL 149 90% FEDERAL 10% STATE RURAL LIGHTING 0021	FRANKLIN CO IL 149 90% FEDERAL 10% STATE RURAL BRIDGE 0059
*	82110009	LUMINAIRE, LED, ROADWAY, OUTPUT DESIGNATION I	EACH	22		22	
*	82500360	LIGHTING CONTROLLER, BASE MOUNTED, 480VOLT, 100AMP	EACH	1		1	
*	83002600	LIGHT POLE, ALUMINUM, 40 FT. M.H., 15 FT. DAVIT ARM	EACH	22		22	
*	83600356	LIGHT POLE FOUNDATION, METAL, 15" BOLT CIRCLE, 8 5/8" X 6'	EACH	22		22	
*	83800650	BREAKAWAY DEVICE, COUPLING WITH STAINLESS STEEL SCREEN	EACH	88		88	
	84200600	REMOVAL OF LIGHTING UNIT, NO SALVAGE	EACH	12		12	
	84200804	REMOVAL OF POLE FOUNDATION	EACH	12		12	
	84500110	REMOVAL OF LIGHTING CONTROLLER	EACH	1		1	
	X0323117	LANDSCAPING GRAVEL	SQ YD	1,043	1,043		
*	X8210403	PARAPET MOUNTED BRIDGE LIGHTING SYSTEM	L SUM	1			1
	X1700010	STAMPED COLORED PORTLAND CEMENT CONCRETE PAVEMENT 9" (JOINTED)	SQ YD	2,251	2,251		
	X1700011	STAMPED COLORED PORTLAND CEMENT CONCRETE MEDIAN SURFACE 4 INCH	SQ FT	7,716	7,716		
	X2200003	FENCE (SPECIAL)	FOOT	516	516		
	X4060995	TEMPORARY RAMP (SPECIAL)	SQ YD	196	196		

* SPECIALTY ITEM

REV. - MS

SUMMARY OF QUANTITIES - CONT

CODE NUMBER	ITEM DESCRIPTION	UNIT	TOTAL QUANTITY	FRANKLIN CO IL 149 90% FEDERAL 10% STATE RURAL ROADWAY 0004	FRANKLIN CO IL 149 90% FEDERAL 10% STATE RURAL LIGHTING 0021	FRANKLIN CO IL 149 90% FEDERAL 10% STATE RURAL BRIDGE 0059
X4240440	PORTLAND CEMENT CONCRETE SIDEWALK 6 INCH (SPECIAL)	SQ FT	1,257	1,257		
X4402805	ISLAND REMOVAL	SQ FT	1,059	1,059		
X5503101	PLUG EXISTING PIPE	CU YD	0.28	0.28		
X6024502	INLETS, TYPE B, WITH SPECIAL FRAME AND GRATE	EACH	2	2		
X6061815	COMBINATION CONCRETE CURB AND GUTTER, TYPE M (SPECIAL)	FOOT	841	841		
X6350120	DELINEATOR REMOVAL	EACH	104	104		
X6640300	CHAIN LINK FENCE REMOVAL	FOOT	516	516		
70307120	TEMPORARY PAVEMENT MARKING - LINE 4" - TYPE IV TAPE	FOOT	27,536	27,536		
X7010216	TRAFFIC CONTROL AND PROTECTION, (SPECIAL)	L SUM	1	1		
Z0004552	APPROACH SLAB REMOVAL	SQ YD	293			293
Z0012130	BRIDGE DECK SCARIFICATION 3/4"	SQ YD	1,734			1,734
Z0013798	CONSTRUCTION LAYOUT	L SUM	1	1		
Z0012166	BRIDGE DECK MICROSILICA CONCRETE OVERLAY 2 3/4"	SQ YD	1,734			1,734
Z0016001	DECK SLAB REPAIR (FULL DEPTH, TYPE I)	SQ YD	10			10

REV. - MS

SUMMARY OF QUANTITIES - CONT

	CODE NUMBER	ITEM DESCRIPTION	UNIT	TOTAL QUANTITY	FRANKLIN CO	FRANKLIN CO	FRANKLIN CO
				COUNTY:	FRANKLIN CO	FRANKLIN CO	FRANKLIN CO
				ROUTE:	IL 149	IL 149	IL 149
				FUNDING:	90% FEDERAL 10% STATE	90% FEDERAL 10% STATE	90% FEDERAL 10% STATE
				LOCATION:	RURAL	RURAL	RURAL
					ROADWAY	LIGHTING	BRIDGE
					0004	0021	0059
	Z0018002	DRAINAGE SCUPPERS, DS-11	EACH	4			4
ø	Z0076600	TRAINEES	HOUR	500	500		
	Z0062456	TEMPORARY PAVEMENT	SQ YD	1,350	1,350		
ø	Z0076604	TRAINEES TRAINING PROGRAM GRADUATE	HOUR	500	500		

ø 0042

REV. - MS

MODEL: SOQ 11 [Sheet]
FILE NAME: pw://ildot-pw.bentley.com:PWIDOT/Documents/IDOT Offices/District 9/ORD Projects/78814/CADData/CADsheets/0978814-SHC-SoQ.dgn

USER NAME = Tristen.Reid	DESIGNED -	REVISED -	
	DRAWN -	REVISED -	
PLOT SCALE = 0.08333317 ' / in.	CHECKED -	REVISED -	
PLOT DATE = 8/25/2023	DATE -	REVISED -	

STATE OF ILLINOIS
DEPARTMENT OF TRANSPORTATION

SUMMARY OF QUANTITIES

SCALE:SCALE | SHEET 0 OF 1 SHEETS | STA. TO STA.

F.A.P RTE.	SECTION	COUNTY	TOTAL SHEETS	SHEET NO.
873	(28-5)K-1	FRANKLIN	162	14A

CONTRACT NO. 78814

ILLINOIS | FED. AID PROJECT

TO BE USED
RAMP B
RAMP D

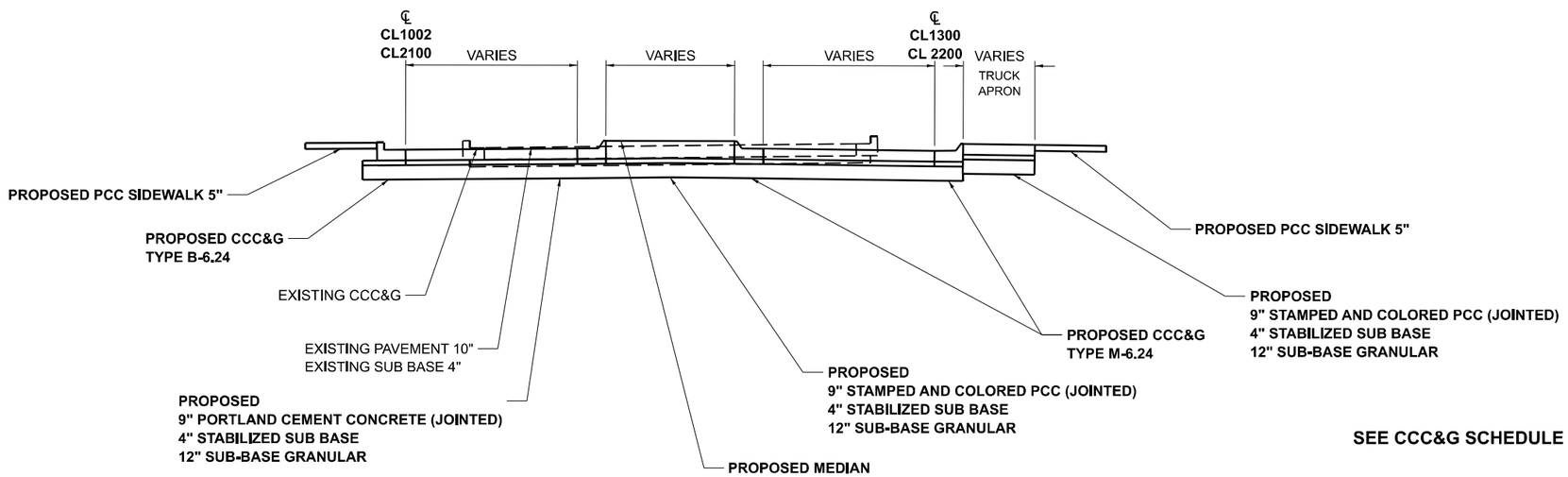

SEE CCC&G SCHEDULE FOR CURB TYPE

TO BE USED
RAMP A
RAMP C

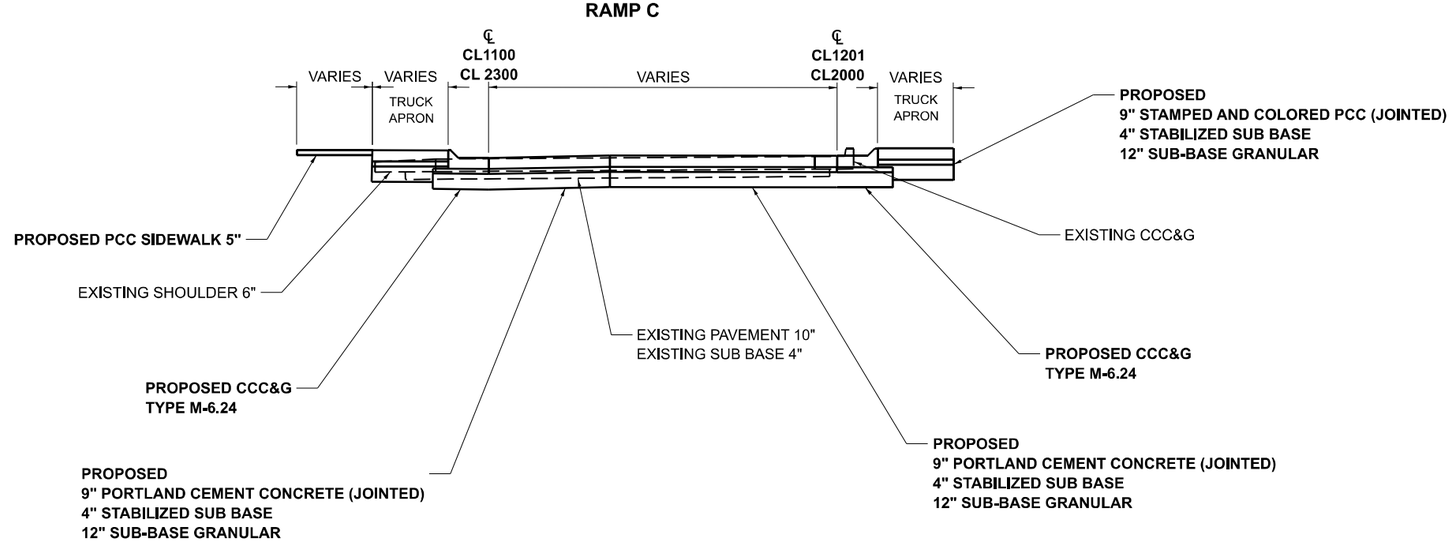

SEE CCC&G SCHEDULE FOR CURB TYPE

MODEL: IL149 - Plan 1 [Sheet]
FILE NAME: pw://ildot-pw.bentley.com:PWIDOT/Documents/IDOT Offices/District 9/ORD Projects/78814/CADData/CADsheets/D278814-Sht3-Typicals.dgn

USER NAME = Tristen.Reid	DESIGNED -	REVISED -	
	DRAWN -	REVISED -	
PLOT SCALE = 0.16666633 ' / in.	CHECKED -	REVISED -	
PLOT DATE = 8/24/2023	DATE -	REVISED -	

STATE OF ILLINOIS
DEPARTMENT OF TRANSPORTATION

TYPICAL SECTIONS

SCALE: 1"=30' | SHEET 1 OF 3 SHEETS | STA. | TO STA.

F.A.P RTE.	SECTION	COUNTY	TOTAL SHEETS	SHEET NO.
873	(28-5)K-1	FRANKLIN	162	15
		CONTRACT NO. 78814		
	ILLINOIS	FED. AID PROJECT		

TO BE USED
IL 149 WB STA 1606+00 TO 1611+41
(SEE BRIDGE PLANS STA 1607+53 TO 1610+30)

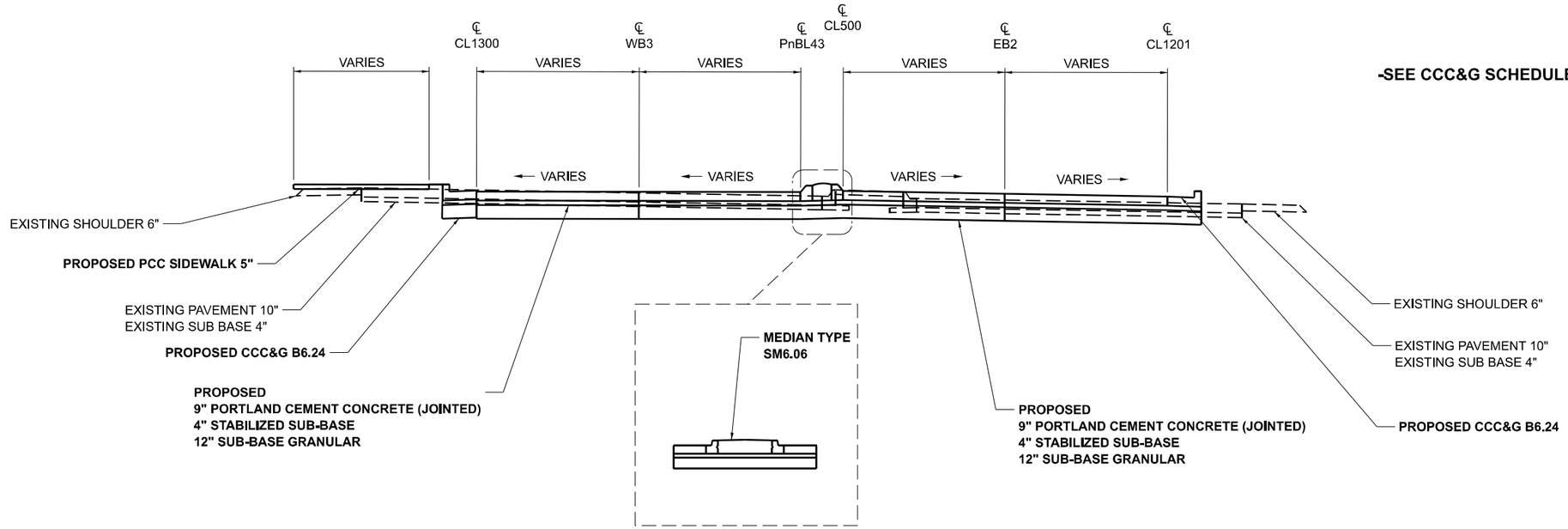

-SEE CCC&G SCHEDULE FOR CURB TYPE

MODEL: Il 149 - Plan 2 [Sheet]
FILE NAME: pw://ildot-pw.bentley.com:PWIDOT/Documents/IDOT Offices/District 5/ORD Projects/78814/CADData/CADsheets/D78814-Sht0-Typical8.dgn

USER NAME = Tristen.Reid	DESIGNED -	REVISED -	
	DRAWN -	REVISED -	
PLOT SCALE = 0.16666633 ' / in.	CHECKED -	REVISED -	
PLOT DATE = 8/24/2023	DATE -	REVISED -	

STATE OF ILLINOIS
DEPARTMENT OF TRANSPORTATION

TYPICAL SECTIONS

SCALE: 1"=30' | SHEET 2 OF 3 SHEETS | STA. TO STA.

F.A.P RTE.	SECTION	COUNTY	TOTAL SHEETS	SHEET NO.
873	(28-5)K-1	FRANKLIN	162	17
		CONTRACT NO. 78814		
	ILLINOIS	FED. AID PROJECT		

CIRCULAR ROADWAY

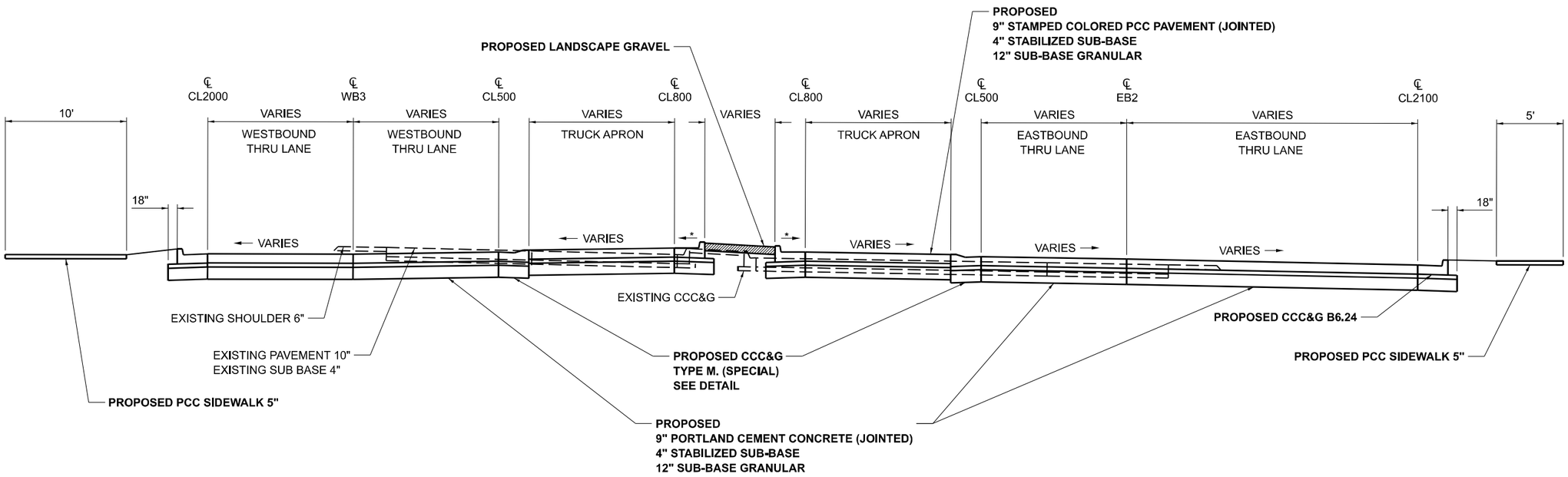

TO BE USED
IL 149 WB STA 1600+00 TO 1603+85
IL 149 WB STA 1613+66 TO 1616+05.5

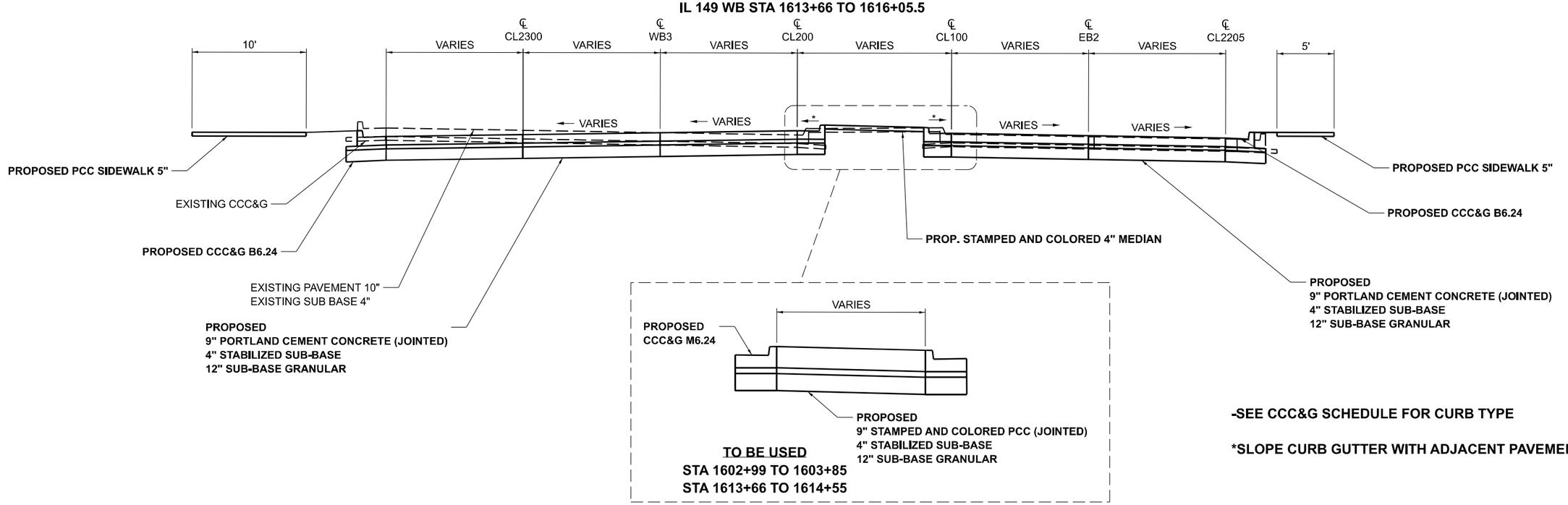

TO BE USED
STA 1602+99 TO 1603+85
STA 1613+66 TO 1614+55

-SEE CCC&G SCHEDULE FOR CURB TYPE

***SLOPE CURB GUTTER WITH ADJACENT PAVEMENT**

MODEL: Il 149 - Plan 3 [Sheet]
FILE NAME: pw://ildot-pw.bentley.com:PWIDOT/Documents/IDOT Offices/District 9/ORD Projects/78814/CADData/CADsheets/0978814-SHS-Typicals.dgn

USER NAME = Tristen.Reid	DESIGNED -	REVISED -	
	DRAWN -	REVISED -	
PLOT SCALE = 0.16666633 ' / in.	CHECKED -	REVISED -	
PLOT DATE = 8/24/2023	DATE -	REVISED -	

STATE OF ILLINOIS
DEPARTMENT OF TRANSPORTATION

TYPICAL SECTIONS

SCALE: SHEET OF SHEETS STA. TO STA.

F.A.P RTE.	SECTION	COUNTY	TOTAL SHEETS	SHEET NO.
873	(28-5)K-1	FRANKLIN	162	16
		CONTRACT NO. 78814		
		ILLINOIS	FED. AID PROJECT	

REMOVAL SCHEDULE

LOCATION STATION TO STATION	LENGTH	WIDTH	PAVEMENT REMOVAL	ISLAND REMOVAL	MEDIAN REMOVAL	PAVED SHOULDER REMOVAL	COMBINATION CURB & GUTTER REMOVAL	GUARDRAIL REMOVAL	COMMENTS
IL 149	FT	FT	SQ YD	SQ FT	SQ FT	SQ YD	FOOT	FOOT	
682+40 TO 685+50	310		295						
683+70 TO 688+05	435					387			
LT 685+50 TO 688+05	255	2				57			
685+50 TO 689+95	445				7425				
690+55 TO 692+97	242				1980				
RT 690+97 TO 692+97 RT	200	5				112			
LT 690+99 TO 692+97 LT	198	5				110			
RT 695+45 TO 697+82 RT	237	5				132			
LT 695+45 TO 697+85 LT	240	5				134			
LT 695+37 TO 696+57	120							120	
695+45 TO 697+87	242				2138				
698+51 TO 701+01	250				4015				
EASTBOUND									
682+48							10		OUTLETS
THRU 685+50 TO 692+97	747	24	1992						
RT 685+90 TO 689+06	316	12	422						
THRU 695+45 TO 701+01.5	556.5	24	1484						
LT 695+45 TO 698+51			408						
WESTBOUND									
683+80							8		OUTLETS
RT LANE 685+50 TO 688+05	255		225						
THRU 685+50 TO 692+97	747	24	1992						
LT 689+89.5 TO 692+97	308		410						
THRU 695+45 TO 701+04	559	24	1491						
RT 699+15 TO 701+19			272						
SOFIA ROAD									
10+13.5 TO 10+40.5	27	7.5	128						
RAMP A (NE RAMP)									
0+12.5 TO 1+98.5	186		517						
0+16 TO 0+40	24			245					
LT 0+46 TO 1+98	152	4				68			
RT 1+37 TO 1+98	61	8				55			
1+37 TO 701+30 IL 149							364		
IL 149 697+84 TO 0+46 RAMP A							74		
RAMP B (SE RAMP)									
LT 6+54 TO 9+96	342	4				152			
RT 6+55 TO 9+60	305	8				272			
6+55 TO 10+44	389		1033						
IL 149 697+82 TO 9+72 RAMP B							106		
9+37 TO 701+02 IL 149							353		
10+25 TO 10+45	20			352					
RAMP C (SW RAMP)									
0+13 TO 2+12	199		620						
0+15 TO 0+38	23			187					
LT 0+57 TO 2+12 LT	155	4				70			
0+85 TO 690+95 IL 149							152		
RT 1+40 TO 2+12 RT	72	8				64			
IL 149 688+68 TO 1+57 RAMP C							225		
RAMP D (NW RAMP)									
RT 9+44 TO 10+04	60	8				54			
LT 9+44 TO 10+83	139	4				62			
9+45 TO 11+13	168		580						
IL 149 688+59 TO 9+83 RAMP D							223		
10+59 TO 690+98 IL 149							137		
10+91 TO 11+11	20			275					
			1314						STAGING TEMP. PAVEMENT
2203+06 TO 2203+50			123						La FIESTA PARKING LOT
TOTALS			13306	1059	15558	1729	1652	120	

MODEL: Schedule [Sheet]
FILE NAME: pw://ildot-pw.bentley.com:PWIDOT/Documents/IDOT Offices-Districts 9/ORD Projects/78814/CADData/CADsheets/D278814-Sht-Schedule.dgn

USER NAME = Tristen.Reid	DESIGNED -	REVISED -
	DRAWN -	REVISED -
PLOT SCALE = 0.16666633 ' / in.	CHECKED -	REVISED -
PLOT DATE = 8/24/2023	DATE -	REVISED -

STATE OF ILLINOIS
DEPARTMENT OF TRANSPORTATION

REMOVAL SCHEDULE

SCALE: SHEET 18 OF 50 SHEETS STA. TO STA.

F.A.P RTE.	SECTION	COUNTY	TOTAL SHEETS	SHEET NO.
873	(28-5)K-1	FRANKLIN	162	18
		CONTRACT NO. 78814		
		ILLINOIS FED. AID PROJECT		

PCC PAVEMENT SCHEDULE

LOCATION STATION TO STATION	LENGTH	SUB-BASE GRANULAR MATERIAL, TYPE A 12"	PCC PAVEMENT, 9" (JOINTED)	STAMPED COLORED PCC PAVEMENT, 9" (JOINTED)	STAMPED COLORED PCC MEDIAN SURFACE, 4"	STABILZED SUB BASE, 4"	PROTECTIVE COAT	TEMPORARY PAVEMENT	COMMENTS
IL 149	FOOT	SQ YD	SQ YD	SQ YD	SQ FT	SQ YD	SQ YD	SQ YD	
682+40 TO 685+50					2480				
700+00 TO 700+30					70				
800+00 TO 800+40					85				
WESTBOUND									
RT LANE 685+50 TO 688+05	255	225	225			225	225		
WESTBOUND THRU LANES									
1600+00 TO 1607+68.5	769	2586	2586			2586	2586		
1610+16 TO 1616+05.39	589	1894	1894			1894	1894		
EASTBOUND THRU LANES									
1700+00 TO 1707+71.5	772	2440	2440			2440	2440		
1710+19 TO 1715+92.5	574	1857	1857			1857	1857		
RAMP A									
2302+01.5 TO 2304+45.22	244	395	395			395	395		
RAMP B									
2200+00 TO 2203+94.3	394	980	980			980	980		
RAMP C									
1102+95.7 TO 1105+79.8	284	391	391			391	391		
RAMP D									
1000+00 TO 1001+89.9	190	505	505			505	505		
ROUNDABOUT									
501+78 TO 502+83	105	132	132			132	132		
511+53 TO 512+55.8	103	133	133			133	133		
SOFIA ROAD									
2300+00 TO 2300+38	38	97	97			97	97		
INSIDE MEDIAN									
103+00 TO 103+90	90	176		176		176	176		
302+69 TO 303+69	100	180		180		180	180		
MEDIAN WESTSIDE									
100+00 TO 103+00					3057		3057		
504+40 TO 504+93					240		240		
MEDIAN EASTSIDE									
509+45 TO 509+98					230		230		
301+20 TO 302+70					1554		1554		
TRUCK LANE									
700+00 TO 703+48	348	530		530		530	530		
800+00 TO 803+29	329	551		551		551	551		
RAMP A									
2001+08		12	12			12			SIDEWALK
2303+40		16	16			16			SIDEWALK
RAMP B									
2202+95		4	4			4			SIDEWALK
RAMP C									
1104+69		8	8			8			SIDEWALK
1201+20		5	5			5			SIDEWALK
RAMP D									
1000+83		6	6			6			SIDEWALK
SUBTOTALS		13123	11686	1437	7716	13123	18153	0	
TOTALS		13937	11686	2251	7716	13937	18967	1350	

MODEL: Schedule-1 [Sheet]
FILE NAME: pw://bdcw.bentley.com:PWIDOT/Documents/IDOT Offices/District 9/ORD Projects/78814/CADData/CADsheets/D78814-Sht5-Schedule.dgn

USER NAME = Tristen.Reid	DESIGNED -	REVISED -	
	DRAWN -	REVISED -	
PLOT SCALE = 0.16666633 ' / in.	CHECKED -	REVISED -	
PLOT DATE = 8/24/2023	DATE -	REVISED -	

STATE OF ILLINOIS
DEPARTMENT OF TRANSPORTATION

PCC PAVEMENT SCHEDULE

SCALE: SHEET 19 OF 50 SHEETS STA. TO STA.

F.A.P RTE.	SECTION	COUNTY	TOTAL SHEETS	SHEET NO.
873	(28-5)K-1	FRANKLIN	162	19

CONTRACT NO. 78814

ILLINOIS FED. AID PROJECT

PCC PAVEMENT SCHEDULE

LOCATION STATION TO STATION	LENGTH	SUB-BASE GRANULAR MATERIAL, TYPE A 12"	PCC PAVEMENT, 9" (JOINTED)	STAMPED COLORED PCC PAVEMENT, 9" (JOINTED)	STAMPED COLORED PCC MEDIAN SURFACE, 4"	STABILZED SUB BASE, 4"	PROTECTIVE COAT	TEMPORARY PAVEMENT	COMMENTS
IL 149	FOOT	SQ YD	SQ YD	SQ YD	SQ FT	SQ YD	SQ YD	SQ YD	
RAMP A OVERSIZED LOAD PAV'T									
2302+86 TO 2303+35	49	60		60		60	60		STOP AT SIDEWALK
2303+45 TO 2304+39	94	134		134		134	134		
2000+00 TO 2001+02	102	93		93		93	93		STOP AT SIDEWALK
2001+12 TO 2001+28	16	18		18		18	18		
RAMP B OVERSIZED LOAD PAV'T									
2202+22 TO 2202+93	71	39		39		39	39		STOP AT SIDEWALK
2202+98 TO 2303+54	156	43		43		43	43		
RAMP B INSIDE ISLAND									
2202+52.6 TO 2203+41	88	71		71		71	71		
RAMP C OVERSIZED LOAD PAV'T									
1200+61 TO 1201+17	56	23		23		23	23		STOP AT SIDEWALK
1201+22 TO 1201+38	16	21		21		21	21		
1104+10 TO 1104+66	56	61		61		61	61		STOP AT SIDEWALK
1104+71 TO 1105+73	102	100		100		100	100		
RAMP D OVERSIZED LOAD PAV'T									
1000+11 TO 1000+77	66	40		40		40	40		STOP AT SIDEWALK
1000+87 TO 1002+30	143	79		79		79	79		
RAMP D INSIDE ISLAND									
1000+66.8 TO 1001+35	68	32		32		32	32		
WEST INNER CIRCLE									
700+00 TO 703+47									
EAST INNER CIRCLE									
800+00 TO 803+66									
								1350	
SUBTOTALS		814	0	814	0	814	814	1350	
TOTALS		13937	11686	2251	7716	13937	18967	1350	

MODEL: Schedule-2 [Sheet]
FILE NAME: pw://bldxw.bentley.com:PWIDOT/Documents/IDOT Offices/Dutes SWRD Projects/78814/CADData/CADSheets/0278814-Sht-E-Schedule.dgn

USER NAME = Tristen.Reid	DESIGNED -	REVISED -	STATE OF ILLINOIS DEPARTMENT OF TRANSPORTATION
	DRAWN -	REVISED -	
PLOT SCALE = 0.16666633 ' / in.	CHECKED -	REVISED -	
PLOT DATE = 8/24/2023	DATE -	REVISED -	

PCC PAVEMENT SCHEDULE CONT.

SCALE: SHEET 20 OF 50 SHEETS STA. TO STA.

F.A.P RTE.	SECTION	COUNTY	TOTAL SHEETS	SHEET NO.
873	(28-5)K-1	FRANKLIN	162	20
		CONTRACT NO. 78814		
	ILLINOIS	FED. AID PROJECT		

PAVEMENT MARKING SCHEDULE

LOCATION STATION TO STATION	LENGTH	MODIFIED URETHANE PAVEMENT MARKING						RAISED REFLECTIVE PAVEMENT MARKER	GROOVING FOR RECESSED PAV'T MARKING 5"	GROOVING FOR RECESSED PAV'T MARKING 9"	GROOVING FOR RECESSED PAV'T MARKING 13"	GROOVING FOR RECESSED PAV'T MARKING 19"	GROOVING FOR RECESSED PAV'T MARKING LETTERS AND SYMBOLS	COMMENTS
		LINE 4"		LINE 8"	LINE 12"	LINE 18"	LETTERS AND SYMBOLS							
		YELLOW SOLID	WHITE SOLID	WHITE	YELLOW	WHITE								
	FOOT	FOOT	FOOT	FOOT	FOOT	FOOT	SQ FT	EACH	FOOT	FOOT	FOOT	FOOT	SQ FT	
IL 149 EASTBOUND														
1700+00 TO 1703+18	318		80						80					SKIP DASH CENTERLINE
1700+00 TO 1702+83	283		283						283					
1700+00 TO 1703+85	385	385							385					
1700+00 TO 1716+00								20						
1702+45							21						21	FISH HOOK THRU
1702+45							32						32	FISH HOOK THRU/RIGHT
1703+80							8						8	YIELD LINE (TRIANGLES)
1703+98							8						8	YIELD LINE (TRIANGLES)
1704+03						50						50		2' SKIP - 2' DASH
1704+37.5 TO 1706+75	237.5		490						490					LANE BUFFER
1704+37.5 TO 1706+75	237.5			240						240				HATCH FOR LANE BUFFER
1706+75 TO 1710+84	409		102						102					SKIP DASH CENTERLINE
1710+84 TO 1712+90	206		427						427					LANE BUFFER
1707+68							35						35	FISH HOOK THRU/LEFT + DOT
1707+68							21						21	FISH HOOK THRU
1707+74 LT							22						22	YIELD
1707+93 RT							22						22	YIELD
1710+28							21						21	FISH HOOK THRU
1710+28							35						35	FISH HOOK THRU/LEFT + DOT
1710+84 TO 1712+90	206			192						192				LANE BUFFER
1712+14							35						35	FISH HOOK THRU/LEFT + DOT
1712+14							21						21	FISH HOOK THRU
1713+25						35						35		2' SKIP - 2' DASH
1713+20 TO 1714+45	125		265						265					LANE BUFFER
1713+20 TO 1714+45	125			96						96				LANE BUFFER
1714+45 TO 1715+92	147		37						37					SKIP DASH CENTERLINE
PAINTED ISLAND					30						30			
1703+18 TO 1704+12			178						178					
RAMP C														
1102+84 TO 1105+65		278			90				278		90			
IL 149 WESTBOUND														
1600+00 TO 1602+53	253		64						64					SKIP DASH CENTERLINE
1600+00 TO 1616+00								20						
1600+00 TO 1603+07	307		307						307					LEFT EOP
1600+00 TO 1603+88	388	388							388					RIGHT EOP
1600+00 TO 1600+54	54		54						54					RIGHT TURN LANE
1600+00 TO 1616+05		475							475					MULTI-USE PATH
1602+53 TO 1604+07	154		323						323					LANE BUFFER
1602+53 TO 1604+07	154			132						132				LANE BUFFER
1604+39 TO 1606+71.5	232.5		480						480					LANE BUFFER
1604+39 TO 1606+71.5	232.5			240						240				LANE BUFFER
1604+07						35						35		2' SKIP - 2' DASH
1606+71.5 TO 1610+81.5	410		103						103					SKIP DASH CENTERLINE
1607+62							21						21	FISH HOOK THRU
1607+62							35						35	FISH HOOK THRU/LEFT + DOT
1610+25							21						21	FISH HOOK THRU
1610+25							35						35	FISH HOOK THRU/LEFT + DOT
1610+81.5 TO 1613+35	253.5		522						522					LANE BUFFER
1610+81.5 TO 1613+35	253.5			264						264				LANE BUFFER
1613+56						50						50		2' SKIP - 2' DASH
1613+60							8						8	YIELD LINE (TRIANGLES)
1613+66 LT							22						22	YIELD
SUBTOTALS		0	3715	1164	120	170	423	40	5241	1164	120	170	423	
TOTALS		1661	4784	1164	500	170	883	40	6445	1164	500	170	883	

MODEL: Schedule-3 [Sheet]
FILE NAME: pw://ildot-pw.bentley.com:PWIDOT/Documents/IDOT Offices-Districts 9/ORD Projects/78814/CADData/CADsheets/D278814-Sht-Schedule.dgn

USER NAME = Tristen.Reid	DESIGNED -	REVISED -	
	DRAWN -	REVISED -	
PLOT SCALE = 0.16666633 ' / in.	CHECKED -	REVISED -	
PLOT DATE = 8/24/2023	DATE -	REVISED -	

STATE OF ILLINOIS
DEPARTMENT OF TRANSPORTATION

PAVE /IENT MARKING SCHEDULE

SCALE: SHEET 21 OF 50 SHEETS STA. TO STA.

F.A.P RTE.	SECTION	COUNTY	TOTAL SHEETS	SHEET NO.
873	(28-5)K-1	FRANKLIN	162	21
		CONTRACT NO. 78814		
		ILLINOIS	FED. AID PROJECT	

PAVEMENT MARKING SCHEDULE

LOCATION STATION TO STATION	LENGTH	MODIFIED URETHANE PAVEMENT MARKING						RAISED REFLECTIVE PAVEMENT MARKER	GROOVING FOR RECESSED PAV'T MARKING 5"	GROOVING FOR RECESSED PAV'T MARKING 9"	GROOVING FOR RECESSED PAV'T MARKING 13"	GROOVING FOR RECESSED PAV'T MARKING 19"	GROOVING FOR RECESSED PAV'T MARKING LETTERS AND SYMBOLS	COMMENTS
		LINE 4"		LINE 8"	LINE 12"	LINE 18"	LETTERS AND SYMBOLS							
		YELLOW SOLID	WHITE SOLID	WHITE	YELLOW	WHITE								
	FOOT	FOOT	FOOT	FOOT	FOOT	FOOT	SQ FT	EACH	FOOT	FOOT	FOOT	FOOT	SQ FT	
1613+72							8						8	YIELD LINE (TRIANGLES)
1613+75 RT							22						22	YIELD
1614+41 TO 1616+05.5	164.5		42						42					SKIP DASH CENTERLINE
1614+80							24						24	FISH HOOK THRU + DOT
1614+80							32						32	FISH HOOK THRU/RIGHT
PAINTED ISLAND														
1613+50 TO 1614+41	91		171		30				171		30			
RAMP A														
2302+02 TO 2304+07	205		169		100				169		100			
RAMP B PAINTED ISLAND					20						20			
2202+15 TO 2202+52	37		80						80					
RAMP B														
2100+00 TO 2101+35	135	135							135					LEFT EOP
2101+42							35						35	FISH HOOK THRU/LEFT + DOT
2101+42							21						21	ONLY/RIGHT ARROW
2102+57							35						35	FISH HOOK THRU/LEFT + DOT
2102+57							21						21	ONLY/RIGHT ARROW
2103+00	5				35						35			CROSSWALKS
2103+11							22						22	YIELD
2103+20							8						8	YIELD LINE (TRIANGLES)
2201+33 TO 2202+15	82		82						82					SOLID CENTERLINE
2200+00 TO 2201+35	135		135						135					RIGHT EOP
2202+95	5				35						35			CROSSWALKS
2203+27							22						22	YIELD
2203+35							8						8	YIELD LINE (TRIANGLES)
RAMP C														
1102+84 TO 1105+65			278						278					
RAMP D PAINTED ISLAND					20						20			
1000+32 TO 1000+66	34		80						80					
RAMP D														
1000+00 TO 1000+32	32		32						32					SOLID CENTERLINE
1000+83	10				70						70			CROSSWALKS
1000+90							21						21	RIGHT/ONLY ARROW
1001+20							22						22	YIELD
1001+25							8						8	YIELD LINE (TRIANGLES)
1303+23							22						22	YIELD
1303+35	10				70						70			CROSSWALKS
1304+05							35						35	FISH HOOK THRU/LEFT + DOT
1304+05							21						21	ONLY/RIGHT ARROW
1303+60							35						35	FISH HOOK THRU/LEFT + DOT
1303+17							8						8	YIELD LINE (TRIANGLES)
ROUND ABOUT														
502+25							15						15	THRU/LEFT ARROW
512+02							15						15	THRU/LEFT ARROW
SUBTOTALS		135	1069	0	380	0	460	0	1204	0	380	0	460	
TOTALS		1661	4784	1164	500	170	883	40	6445	1164	500	170	883	

MODEL: Schedule4 [Sheet]
FILE NAME: pw://bbsrvw.bentley.com:PWIDOT/Documents/IDOT Offices/District 8/ORD Projects/78814/CADData/CADsheets/D978814-Sht5-Schedule.dgn

USER NAME = Tristen.Reid	DESIGNED -	REVISED -	STATE OF ILLINOIS DEPARTMENT OF TRANSPORTATION
	DRAWN -	REVISED -	
PLOT SCALE = 0.16666633 ' / in.	CHECKED -	REVISED -	
PLOT DATE = 8/24/2023	DATE -	REVISED -	

PAVEMEI IT MARKING SCHEDULE CONT.

SCALE: | SHEET 22 OF 50 SHEETS | STA. TO STA.

F.A.P RTE.	SECTION	COUNTY	TOTAL SHEETS	SHEET NO.
873	(28-5)K-1	FRANKLIN	162	22
		CONTRACT NO. 78814		
		ILLINOIS	FED. AID PROJECT	

CURB AND GUTTER SCHEDULE

LOCATION STATION TO STATION	COMB. CONCRETE CURB AND GUTTER, TYPE M-6.24	COMB. CONCRETE CURB AND GUTTER, TYPE M (SPECIAL)	COMB. CONCRETE CURB AND GUTTER, TYPE M 4.24	COMB. CONCRETE CURB AND GUTTER, TYPE B 6.24	CLASS SI CONCRETE	CONCRETE CURB TYPE B	PROTECTIVE COAT	CONCRETE MEDIAN TYPE SM-6.06	CURB REFLECTORS	COMMENTS
IL 149	FOOT	FOOT	FOOT	FOOT	CU YD	FOOT	SQ YD	SQ FT	EACH	
682+40 TO 685+50						620				
MEDIAN EASTBOUND										
CL100 100+00 TO 103+00				300			86			
CL100 103+00 TO 103+90	90						26			
CL300 301+20 TO 302+70				150			43			
CL300 302+70 TO 303+70	100						29			
1705+93 TO 1707+56							47	705		
1710+35 TO 1711+47							32	530		
MEDIAN WESTBOUND										
CL200 200+00 TO 203+00				300			86			
CL200 203+00 TO 203+94	94						27			
CL400 401+20 TO 402+70				150			43			
CL400 402+70 TO 403+65	95						27			
END OF MEDIAN										
CL100 103+90 TO 203+94	52						15			
CL300 303+70 TO 403+65	53						15			
INNER CIRCLE										
CL700 700+00 TO 703+47	347						99			
CL800 800+00 TO 803+66	366						105			
WESTBOUND NORTHSIDE							0			
CL1300 1300+00 TO 1303+11				311			89			
CL2000 2001+43 TO 2004+34				291			83			
CL2300 2300+00 TO 2302+87.5				288			82			
EASTBOUND SOUTHSIDE										
CL1100 1103+40 TO 1104+10				70			20			
CL1201 1201+59.5 TO 1204+57.5				298			85			
CL2100 2103+24.5 TO 2105+94				270			77			
CL2205 2203+54 TO 2206+12				258			74			
RAMP A NE										
CL2300 2302+87.5 TO 2303+83	96						27			
CL2000 2000+60.8 TO 2001+43	82						24			
RAMP B SE									15	
CL2100 2101+59 TO 2103+24.5				166			47			
CL2100 2101+25 TO 2101+59					3		10			CURB OUTLET
CL2100 2201+02 TO 2201+58					5		16			CURB OUTLET
CL2100 2201+60 TO 2202+22				62			18			
CL2100 2202+22 TO 2203+54	132						38			
RAMP C SW										
CL1100 1105+74 TO 1104+10	164						47			
CL1100 1105+79 TO 1105+55					4		7			CURB OUTLET
CL1201 1200+00 TO 1200+24					3		7			CURB OUTLET
CL1201 1200+24 TO 1200+61				37			11			
CL1201 1200+61 TO 1201+59.5	99						28			
RAMP D NW									15	
CL1002 1000+00 TO 1000+24					5		7			CURB OUTLET
CL1002 1000+00 TO 1002+30	230						66			
CL1300 1303+11 TO 1304+00				89			26			
CL1300 1303+89.6 TO 1304+13					3		7			CURB OUTLET
TRUCK APRON WEST										
CL500 500+27 TO 504+40		413					138			
TRUCK APRON EAST										
CL500 510+00 TO 514+28		428					143			
RAMP D ISLAND										
CL1002 1000+66.7 TO 1000+35			152				9			SEE ISLAND DETAIL
RAMP B ISLAND										
CL2205 2202+52.5 TO 2203+75			201				35			SEE ISLAND DETAIL
TOTALS	2000	841	353	3040	23	620	1901	1235	30	

MODEL: Schedule-2 [Sheet]
FILE NAME: pw://bldi4ww.bentley.com:PWIDOT/Documents/IDOT Offices/District 5/ORD Projects/78814/CADData/CADsheets/0278814-Sht-Schedule.dgn

USER NAME = Tristen.Reid	DESIGNED -	REVISED -	
	DRAWN -	REVISED -	
PLOT SCALE = 0.16666633 ' / in.	CHECKED -	REVISED -	
PLOT DATE = 8/24/2023	DATE -	REVISED -	

STATE OF ILLINOIS
DEPARTMENT OF TRANSPORTATION

CUR 3 AND GUTTER SCHEDULE

SCALE: | SHEET 23 OF 50 SHEETS | STA. | TO STA.

F.A.P RTE.	SECTION	COUNTY	TOTAL SHEETS	SHEET NO.
873	(28-5)K-1	FRANKLIN	162	23
		CONTRACT NO. 78814		
	ILLINOIS	FED. AID PROJECT		

DRAINAGE SCHEDULE

LOCATION STATION TO STATION	STORM SEWER, CLASS A, TYPE I 36"	STORM SEWER, CLASS A, TYPE I 15"	PRC FLARED END SECTION, 36"	PRC FLARED END SECTION, 15"	CONCRETE COLLAR	INLET TYPE B, W/ SPECIAL FRAME AND GRATE	INLET TYPE B, W/ TYPE 12 FRAME AND GRATE	INLET TYPE B, W/ TYPE 3 FRAME AND GRATE	TRENCH BACKFILL
	FOOT	FOOT	EACH	EACH	CU YD	EACH	EACH	EACH	CU YD
WEST OF I-57									
1001+59.5 28' RT	35		1		0.44				32
1103+74 35' RT	25		1		0.44				23
502.11 1.5' LT						1			
1303+48.5 25.5' RT		40		1					35
1303+00		85						1	75
1202+00								1	
1201+01 27.5' RT		25		1					22
1607+50.5 12' RT		30					1		27
1204+40								1	18
1204+40.5 20' RT		20		1					
EAST OF I-57									
2003+62 28.5' RT		55		1					49
161+82 11.17' RT							1		
2001+44		70						1	62
511+86.5 1.5' LT		90				1			80
2102+93 18' LT		30		1					27
2103+34.5								1	
2302+86.5								1	22
2302+87 25.5' RT		25		1					
2302+64 35' RT	10		1		0.44				9
TOTALS	70	470	3	6	1.32	2	2	6	481

DRAINAGE REMOVAL SCHEDULE

LOCATION STATION TO STATION	MANHOLE REMOVAL	REMOVING INLETS	STORM SEWER REMOVAL 12"	STORM SEWER REMOVAL 15"	CONCRETE HEADWALL REMOVAL	PLUG EXISTING PIPE	PIPE CULVERT REMOVAL
	EACH	EACH	FOOT	FOOT	EACH	CU YD	FOOT
687+00		1	50		1		
LT 689+05					1		
RT 689+05					1		
690+15		1					
LT 689+05 TO 692+65				370		0.14	
692+65	1	1		40			
695+73	1	1	45				
695+73 TO 698+25				250			
697+67		1					
697+67 TO 698+25			70				
698+25		1					
698+25 TO 698+87				75			
698+87		1					
698+87 TO 699+15				30			
699+15						0.14	
RT 699+15 TO 699+15 LT					2		
La FIESTA PARKING LOT							
2203+06 TO 2203+50							50
TOTALS	2	7	165	765	5	0.28	50

MODEL: Schedule[0] [Sheet]
FILE NAME: pw://bldd-wv.bentley.com:PWIDOT/Documents/IDOT Offices/District 9/ORD Projects/78814/CADData/CADSheets/D978814-Sht5-Schedule.dgn

USER NAME = Tristen.Reid	DESIGNED -	REVISED -
	DRAWN -	REVISED -
PLOT SCALE = 0.16666633 ' / in.	CHECKED -	REVISED -
PLOT DATE = 8/24/2023	DATE -	REVISED -

STATE OF ILLINOIS
DEPARTMENT OF TRANSPORTATION

DRAINAGE SCHEDULE
DRAINAGE REMOVAL SCHEDULE

SCALE: SHEET 24 OF 50 SHEETS STA. TO STA.

F.A.P RTE.	SECTION	COUNTY	TOTAL SHEETS	SHEET NO.
873	(28-5)K-1	FRANKLIN	162	24

CONTRACT NO. 78814

ILLINOIS FED. AID PROJECT

SHOULDER SCHEDULE

LOCATION STATION TO STATION	LENGTH	PORTLAND CEMENT CONCRETE SHOULDERS 9"	STABILIZED SUBBASE 4"	SUB-BASE GRANULAR MATERIAL, TYPE A 12"	AGGREGATE WEDGE TYPE B
IL 149	FOOT	SQ YD	SQ YD	SQ YD	TON
EASTBOUND					
1700+00 TO 1703+42	342	380	48	337	7
WESTBOUND					
1600+00 TO 1603+07	307	273	42	237	6
RAMP A NE					
2000+00 TO 2000+61.7 LT	61.7	28	11	31	2
RAMP B SE					
2100+00 TO 2101+59.5 LT	159.5	71	27	80	4
2200+00 TO 2201+60.5 RT	160.5	143	27	152	
UNDER B-6.24					
MEDIAN EASTBOUND					
100+00 TO 103+00	300		134	134	
301+20 TO 302+72	152		67	67	
MEDIAN WESTBOUND					
200+00 TO 203+00	300		134	134	
401+20 TO 402+70	150		67	67	
WESTBOUND-NORTHSIDE					
1300+00 TO 1303+11	311		139	139	
2001+43 TO 2004+34	291		130	130	
2300+00 TO 2302+87.5	287.5		128	128	
EASTBOUND-SOUTHSIDE					
1102+89 TO 1101+10	179		54	54	
1201+59.5 TO 1204+57.5	298		133	133	
2103+24.5 TO 2105+74	249.5		111	111	
2203+54 TO 2206+12	258		115	115	
RAMP B SE					
2101+59 TO 2103+24.5	165.5		74	74	
2201+60 TO 2202+22	62		28	28	
RAMP C SW					
1200+24 TO 1200+61	37		17	17	
RAMP D NW					
1303+11 TO 1304+00	89		40	40	
UNDER TYPE M (SPECIAL)					
500+27 TO 504+40	413		138	138	
510+00 TO 514+28	428		191	191	
UNDER M-4.24					
1000+66.7 TO 1000+35	31.7		68	68	
2202+52.5 TO 2203+75	122.5		90	90	
UNDER M-6.24					
103+00 TO 103+90	90		40	40	
302+70 TO 303+70	100		45	45	
203+00 TO 203+94	94		42	42	
402+70 TO 403+65	95		43	43	
END OF MEDIAN					
103+90 TO 203+94	52		24	24	
303+70 TO 403+65	53		24	24	
INNER CIRCLE					
700+00 TO 703+47	347		155	155	
800+00 TO 803+66	366		163	163	
RAMP A NE					
2302+87.5 TO 2303+83	95.5		43	43	
SUBTOTALS		895	2592	3274	19
TOTALS		895	2896	3578	19

SHOULDER SCHEDULE

LOCATION STATION TO STATION	LENGTH	PORTLAND CEMENT CONCRETE SHOULDERS 9"	STABILIZED SUBBASE 4"	SUB-BASE GRANULAR MATERIAL, TYPE A 12"	AGGREGATE WEDGE TYPE B
IL 149	FOOT	SQ YD	SQ YD	SQ YD	TON
RAMP B SE					
2202+22 TO 2203+54	132		59	59	
RAMP C SW	0				
1200+61 TO 1201+59.5	98.5		44	44	
1105+74 TO 1104+10	164		73	73	
RAMP D NW					
1000+00 TO 1002+86	286		128	128	
SUBTOTALS		0	304	304	0
TOTALS		895	2896	3578	19

MODEL: Schedule-7 [Sheet]
FILE NAME: pw://ildot-pw.bentley.com:PWIDOT/Documents/IDOT Offices/District 9/ORD Projects/78814/CADData/CADsheets/D978814-Sht-B-Schedules.dgn

USER NAME = Tristen.Reid	DESIGNED -	REVISED -	
	DRAWN -	REVISED -	
PLOT SCALE = 0.16666633 ' / in.	CHECKED -	REVISED -	
PLOT DATE = 8/24/2023	DATE -	REVISED -	

STATE OF ILLINOIS
DEPARTMENT OF TRANSPORTATION

SHOULDER SCHEDULE

SCALE: | SHEET 25 OF 50 SHEETS | STA. | TO STA.

F.A.P RTE.	SECTION	COUNTY	TOTAL SHEETS	SHEET NO.
873	(28-5)K-1	FRANKLIN	162	25

CONTRACT NO. 78814

ILLINOIS | FED. AID PROJECT

SEEDING EROSION CONTROL SCHEDULE

LOCATION STATION AND STATION	SEEDING CLASS 1B	SEEDING CLASS 7	NITROGEN FERTILIZER NUTRIENT	PHOSPHORUS FERTILIZER NUTRIENT	POTASSIUM FERTILIZER NUTRIENT	AGRICULTURAL GROUND LIMESTONE	MULCH METHOD 2	TEMP. EROSION CONTROL SEEDING	STONE RIP RAP CLASS A4	PERIMETER EROSION BARRIER	EROSION CONTROL BLANKET	COMMENTS
IL 149	ACRE	ACRE	POUND	POUND	POUND	TON	ACRE	POUND	SQ YD	FOOT	SQ YD	
EASTBOUND												
RT 682+50 TO 685+50	0.11	0.11	10	10	10	0.22	0.22	33			534	8' WIDE RT/LT
683+75 RT									7			CURB OUTLET-FACTORY OUTLET BLVD.
1700+00 TO 1703+83											340	8' WIDE RT
50' RT 1700+00 TO 1702+85 62' RT										285		EB2
RT 1700+00 TO 1704+00 RT	0.26	0.26	24	24	24	0.52	0.52	78				EB2
62' RT 1702+85 TO 1703+85 70' RT										100		EB2
62' RT 1704+85 TO 1707+75 30'RT										280		EB2
RT 1704+85 TO 1707+75	0.16	0.16	15	15	15	0.32	0.32	48				EB2
70' RT 1710+30 TO 1710+96 55' RT										67		EB2
RT 1710+40.5 TO 1712+28.5	0.16	0.16	15	15	15	0.32	0.32	48				EB2
55' RT 1710+96 TO 1712+50 55' RT										125		EB2
45' RT 1713+40 TO 1715+10 22' RT										155		EB2
RT 1713+45 TO 1715+92.5	0.05	0.05	5	5	5	0.1	0.10	15				EB2
22' RT 1715+10 TO 1715+92 22' RT										82		EB2
WESTBOUND												
682+50 LT									7			
LT 682+50 TO 685+50	0.08	0.08	7	7	7	0.16	0.16	24				
1600+00 TO 1603+77											335	8' WIDE LT
55' LT 1600+00 TO 1600+64 58' LT										65		WB3
58' LT 1600+64 TO 1603+55 50' LT										275		WB3
LT 1600+00 TO 1604+00	0.35	0.35	31	31	31	0.7	0.70	105				WB3
1603+75 55' LT									15			WB3
55' LT 1604+80 TO 1607+75 30' LT										285		WB3
LT 1605+00 TO 1607+75.5	0.14	0.14	13	13	13	0.28	0.28	42				WB3
LT 1610+08 TO 1613+00	0.19	0.19	17	17	17	0.38	0.38	57				WB3
30' LT 1610+09 TO 1612+78 60' LT										275		WB3
LT 1614+00 TO 1616+05	0.02	0.02	2	2	2	0.04	0.04	6				WB3
1614+12 70' LT									15			WB3
53' LT 1614+25 TO 1616+00 45' LT										180		WB3
RAMP D												
RT 1000+00 TO 1001+50	0.08	0.08	8	8	8	0.16	0.16	24				CL1002
25' RT 1000+00 TO 1001+82 32' RT										154		CL1002
1303+08 TO 1304+13 RT	0.06	0.06	6	6	6	0.12	0.12	18				CL1300
25' RT 1303+47 TO 1304+13 25' RT										75		CL1300
RAMP C												
1103+86 TO 1105+77											170	8' WIDE RT
46' RT 1103+80 TO 1105+79 30' RT										150		
1103+87 TO 1105+79	0.14	0.14	13	13	13	0.28	0.28	42				CL1100
15' RT 1200+00 TO 1200+98 30' RT										100		
1200+00 TO 1201+75	0.05	0.05	5	5	5	0.1	0.10	15				CL1201
RAMP B												
20' LT 2100+00 TO 2102+90 30' LT										285		CL2100
2100+00 TO 2103+00											267	8' WIDE LT
2100+00 TO 2103+65	0.14	0.14	13	13	13	0.28	0.28	42				CL2100
20' RT 2200+00 TO 2203+58 20' RT										350		CL2205
2200+00 TO 2203+71	0.04	0.04	4	4	4	0.08	0.08	12				CL2205
RAMP A												
40' RT 2000+00 TO 2000+85 40' RT										85		CL2000
2000+00 TO 2001+55	0.08	0.08	8	8	8	0.16	0.16	24				CL2000
35' RT 2302+48 TO 2304+45 15' RT										160		CL2300
2302+48 TO 2304+45	0.08	0.08	8	8	8	0.16	0.16	24				CL2300
TOTALS	2.19	2.19	204	204	204	4.38	4.38	657	44	3533	1646	

MODEL: Schedule4j [Sheet]
FILE NAME: pw://bbkcs-pw.bentley.com:PWIDOT/Documents/IDOT Offices/District 9/ORD Projects/78814/CAData/CADsheets/0978814-SHEE-Schedule.dgn

USER NAME = Tristen.Reid	DESIGNED -	REVISED -	
	DRAWN -	REVISED -	
PLOT SCALE = 0.16666633 ' / in.	CHECKED -	REVISED -	
PLOT DATE = 8/24/2023	DATE -	REVISED -	

STATE OF ILLINOIS
DEPARTMENT OF TRANSPORTATION

SEEDING EROSION CONTROL SCHEDULE

SCALE: | SHEET 26 OF 50 SHEETS | STA. TO STA.

F.A.P RTE.	SECTION	COUNTY	TOTAL SHEETS	SHEET NO.
873	(28-5)K-1	FRANKLIN	162	26
		CONTRACT NO. 78814		
		ILLINOIS	FED. AID PROJECT	

SIDEWALK SCHEDULE

LOCATION STATION TO STATION	DETECTABLE WARNING	PCC SIDEWALK 5"	COMMENTS
IL 149	SQ FT	SQ FT	
EASTBOUND - SOUTH 5'			
682+30 TO 685+50		1845	
1700+00 TO 1704+50		2290	
1704+73 TO 1707+55		1430	
1710+33 TO 1712+64		1140	
1712+93 TO 1715+92		1540	
WESTBOUND - NORTH 10'			
682+62 TO 685+51		2615	
1600+00 TO 1604+37		4268	
1604+65 TO 1607+53		2895	
1610+51 TO 1613+05		2562	
1613+26 TO 1616+05		2932	
RAMP A			
2001+08	60		
2303+40	60		
RAMP B			
2103+00	15		
2202+96	15		
RAMP C			
1201+20	15		
1104+70	15		
RAMP D			
1000+83	60		
1303+37	60		
TOTALS	300	23517	

FENCE SCHEDULE

LOCATION STATION TO STATION	FENCE (SPECIAL)	CHAIN LINK FENCE REMOVAL
IL 149	FOOT	FOOT
EASTBOUND		
70'RT 1701+50 TO 1702+98.5 103.5'RT	150	150
47'RT 1714+02.5 TO 1715+10.7 45'RT	100	100
45'RT 1715+10.7 TO 1715+10.7 25'RT	20	20
25'RT 1715+10.7 TO 1715+92.5 25'RT	86	86
WESTBOUND		
58.5'LT 1602+45.5 TO 1603+31 94'LT	80	80
RAMP B		
97'RT 2203+16.5 TO 1714+02.5 47'RT	80	80
TO		
TOTALS	516	516

GUARDRAIL SCHEDULE

LOCATION STATION TO STATION	TRAFFIC BARRIER TERMINAL TYPE 1 (SPECIAL)	TRAFFIC BARRIER TERMINAL TYPE 6	TERMINAL MARKER DIRECT APPLIED	COMMENTS
IL 149	EACH	EACH	EACH	
EAST			1	
1706+91.5 TO 1707+41.5	1			
1707+41.5 TO 1707+79.0 RT		1		
WEST			1	
1610+16 TO 1610+53.5		1		
1610+53.5 TO 1611+03.5	1			
TOTALS	2	2	2	

MODEL: Schedule-Sol [Sheet]
FILE NAME: pw://ildot-pw.bentley.com:PWIDOT/Documents/IDOT Offices/District 9/ORD Projects/78814/CADData/CADsheets/D978814-Sht5-Schedules.dgn

USER NAME = Tristen.Reid	DESIGNED -	REVISED -	
	DRAWN -	REVISED -	
PLOT SCALE = 0.16666633 ' / in.	CHECKED -	REVISED -	
PLOT DATE = 10/5/2023	DATE -	REVISED -	

STATE OF ILLINOIS
DEPARTMENT OF TRANSPORTATION

SIDEWALK, FENCE
GUARDRAIL SCHEDULE

SCALE: SHEET 27 OF 50 SHEETS STA. TO STA.

F.A.P RTE.	SECTION	COUNTY	TOTAL SHEETS	SHEET NO.
873	(28-5)K-1	FRANKLIN	162	27

CONTRACT NO. 78814

ILLINOIS FED. AID PROJECT

EARTHWORK SCHEDULE

LOCATION STATION TO STATION	EARTH EXCAVATION	EXCAVATION TO BE USED IN EMBANKMENT ADJUSTED FOR SHRINKAGE	EMBANKMENT	EARTHWORK BALANCE WASTE (+) OR SHORTAGE (-)
	CU YD	CU YD	CU YD	CU YD
STAGE 1	364.10	273.08	341.5	-68.43
STAGE 2	1919.00	1439.25	509	930.25
STAGE 3	739.40	554.55	248.7	305.85
STAGE 4	538.40	403.80	210.2	193.60
STAGE 5	1742.00	1306.50	509	797.50
STAGE 6	329.20	246.90	216.2	30.70
STAGE 7	771.80	578.85	56.5	522.35
STAGE 2	475.00	356.25	504.3	-148.05
TOTALS	6879	5159	2595	2564

RAILING SCHEDULE

LOCATION STATION TO STATION			BRIDGE FENCE RAILING	PCC SIDEWALK 6" (SPECIAL)
IL 149			FOOT	SQ FT
EASTBOUND				
1707+55	TO	1707+90		175
1709+99	TO	1710+34		175
1710+10	TO	1710+42	32	
WESTBOUND				
1607+43	TO	1607+75	32	
1607+53	TO	1607+88		350
1609+96	TO	1610+31		557
1610+08	TO	1610+40	32	
TOTALS			96	1257

MODEL: Schedule-10 [Sheet]
FILE NAME: pw://bbos-pw.bentley.com:PWIDOT/Documents/IDOT Offices/District 9/ORD Projects/78814/CADData/CADsheets/D978814-SHEE-Schedules.dgn

USER NAME = Tristen.Reid	DESIGNED -	REVISED -
	DRAWN -	REVISED -
PLOT SCALE = 0.16666633 ' / in.	CHECKED -	REVISED -
PLOT DATE = 8/24/2023	DATE -	REVISED -

STATE OF ILLINOIS
DEPARTMENT OF TRANSPORTATION

EARTHWORK SCHEDULE
RAILING SCHEDULE

SCALE: | SHEET 28 OF 50 SHEETS | STA. | TO STA.

F.A.P RTE.	SECTION	COUNTY	TOTAL SHEETS	SHEET NO.
873	(28-5)K-1	FRANKLIN	162	28
		CONTRACT NO. 78814		
		ILLINOIS	FED. AID PROJECT	

DITCH CHECKS

LOCATION STATION TO STATION	TEMPORARY DITCH CHECK	COMMENTS
	FOOT	
IL 149 EASBOUND		
STA 682+50	8	
STA 683+00	8	
STA 683+50	8	
STA 684+00	8	
STA 684+50	8	
STA 685+00	8	
STA 685+50	8	
STA 1700+25	8	
STA 1700+50	8	
STA 1700+75	8	
STA 1701+00	8	
STA 1701+25	8	
STA 1701+50	8	
STA 1701+75	8	
STA 1702+00	8	
STA 1702+25	8	
STA 1702+50	8	
STA 1702+75	8	
STA 1703+00	8	
STA 1703+25	8	
IL 149 WESTBOUND		
STA 682+50	8	
STA 683+00	8	
STA 683+50	8	
STA 684+00	8	
STA 684+50	8	
STA 685+00	8	
STA 685+50	8	
STA 1600+25	8	
STA 1600+50	8	
STA 1600+75	8	
STA 1601+00	8	
STA 1601+25	8	
STA 1601+50	8	
STA 1601+75	8	
STA 1602+00	8	
STA 1602+25	8	
STA 1602+50	8	
STA 1602+75	8	
STA 1703+00	8	
STA 1703+25	8	
SUBTOTALS	320	
TOTALS	480	

DITCH CHECKS

LOCATION STATION TO STATION	TEMPORARY DITCH CHECK	COMMENTS
	FOOT	
RAMP C		
STA 1104+00	8	
STA 1104+25	8	
STA 1104+50	8	
STA 1104+75	8	
STA 1105+00	8	
STA 1105+25	8	
STA 1105+50	8	
STA 1105+75	8	
RAMP B		
STA 2100+00	8	
STA 2100+25	8	
STA 2100+50	8	
STA 2100+75	8	
STA 2101+00	8	
STA 2101+25	8	
STA 2101+50	8	
STA 2101+75	8	
STA 2102+00	8	
STA 2102+25	8	
STA 2102+50	8	
STA 2102+75	8	
SUBTOTALS	160	
TOTALS	480	

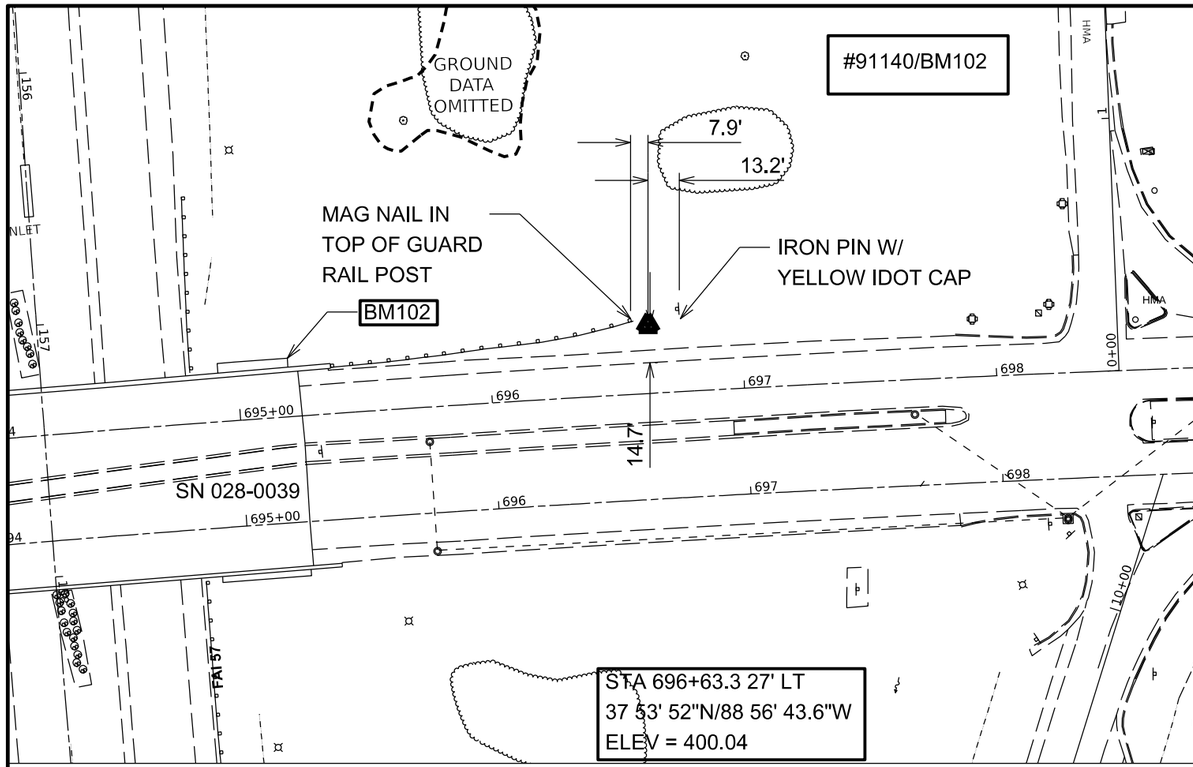

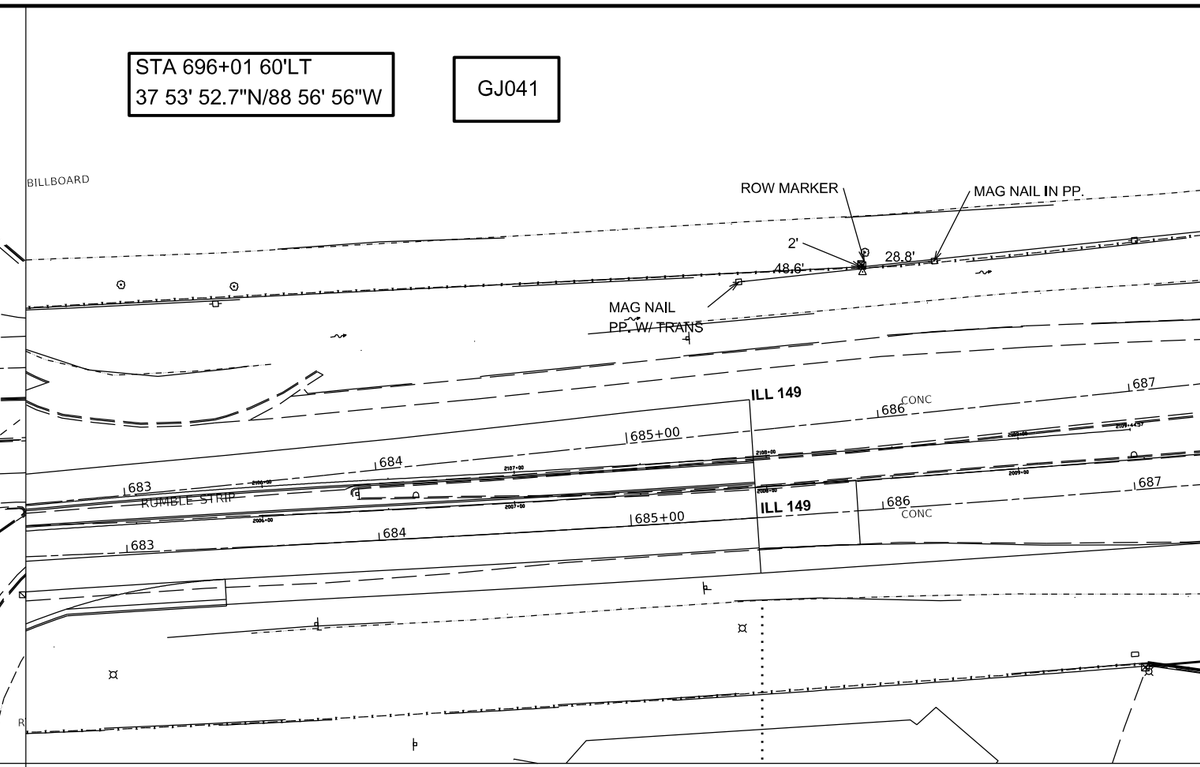

USER NAME = $USER$	DESIGNED -	REVISED -	STATE OF ILLINOIS DEPARTMENT OF TRANSPORTATION
	DRAWN -	REVISED -	
PLOT SCALE = $SCALE$	CHECKED -	REVISED -	
PLOT DATE = $DATE$	DATE -	REVISED -	

TIE POINTS

SCALE: SHEET OF SHEETS STA. TO STA.

F.A. RTE.	SECTION	COUNTY	TOTAL SHEETS	SHEET NO.
873	(28-5)K-1	FRANKLIN	162	30

CONTRACT NO. 78814

ILLINOIS FED. AID PROJECT

MODEL: $MODELNAME$
FILE NAME: $FILE$

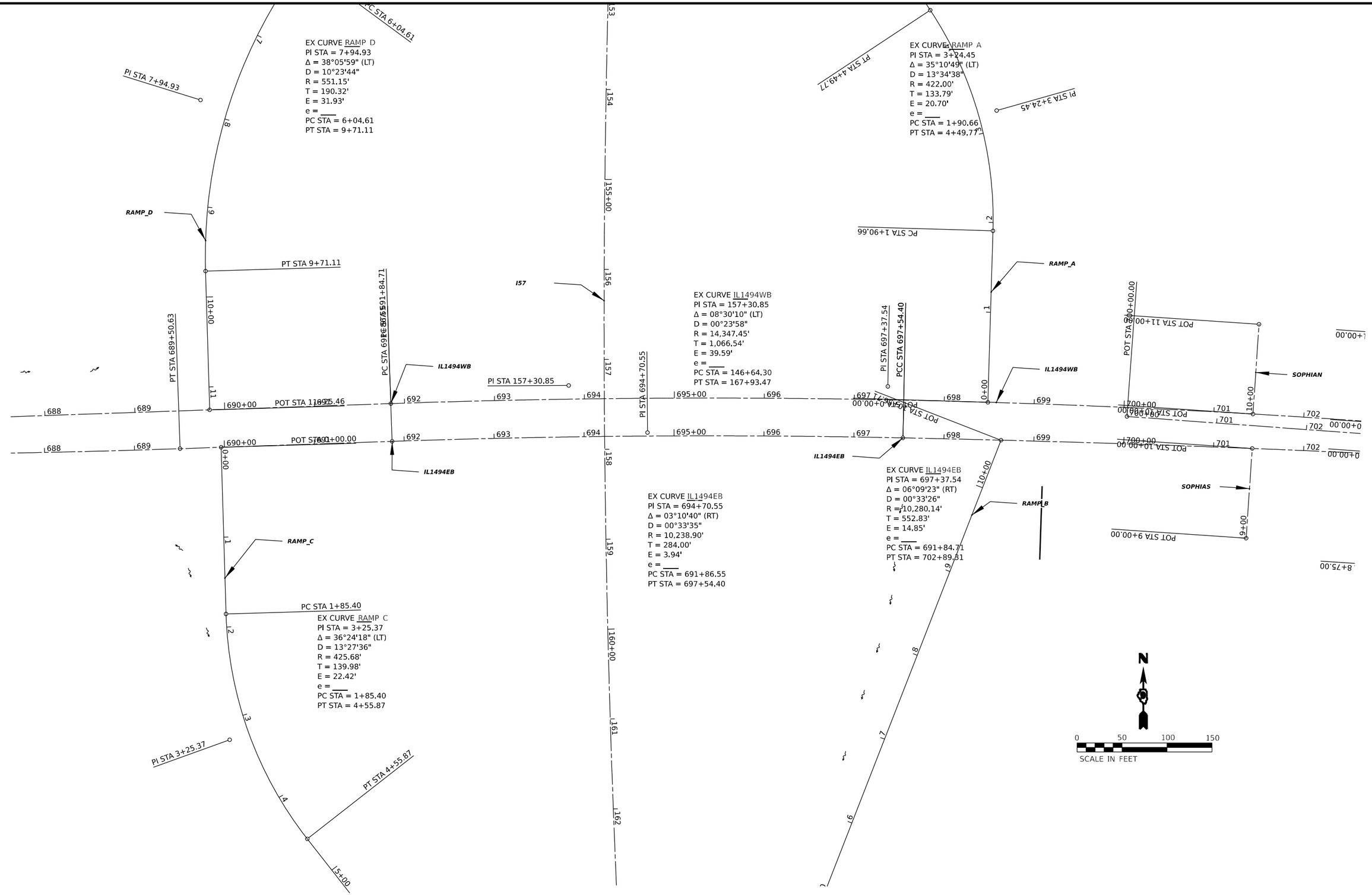

MODEL: $MODELNAME$
FILE NAME: $FILE$

USER NAME = $USER$	DESIGNED -	REVISED -	
	DRAWN -	REVISED -	
PLOT SCALE = $SCALE$	CHECKED -	REVISED -	
PLOT DATE = $DATE$	DATE -	REVISED -	

STATE OF ILLINOIS
DEPARTMENT OF TRANSPORTATION

EXISTNG GEOPAK ELEMENTS

SCALE: | SHEET OF SHEETS | STA. TO STA.

F.A.P. RTE.	SECTION	COUNTY	TOTAL SHEETS	SHEET NO.
873	(28-5)K-1	FRANKLIN	162	31
		CONTRACT NO. 78814		
		ILLINOIS	FED. AID PROJECT	

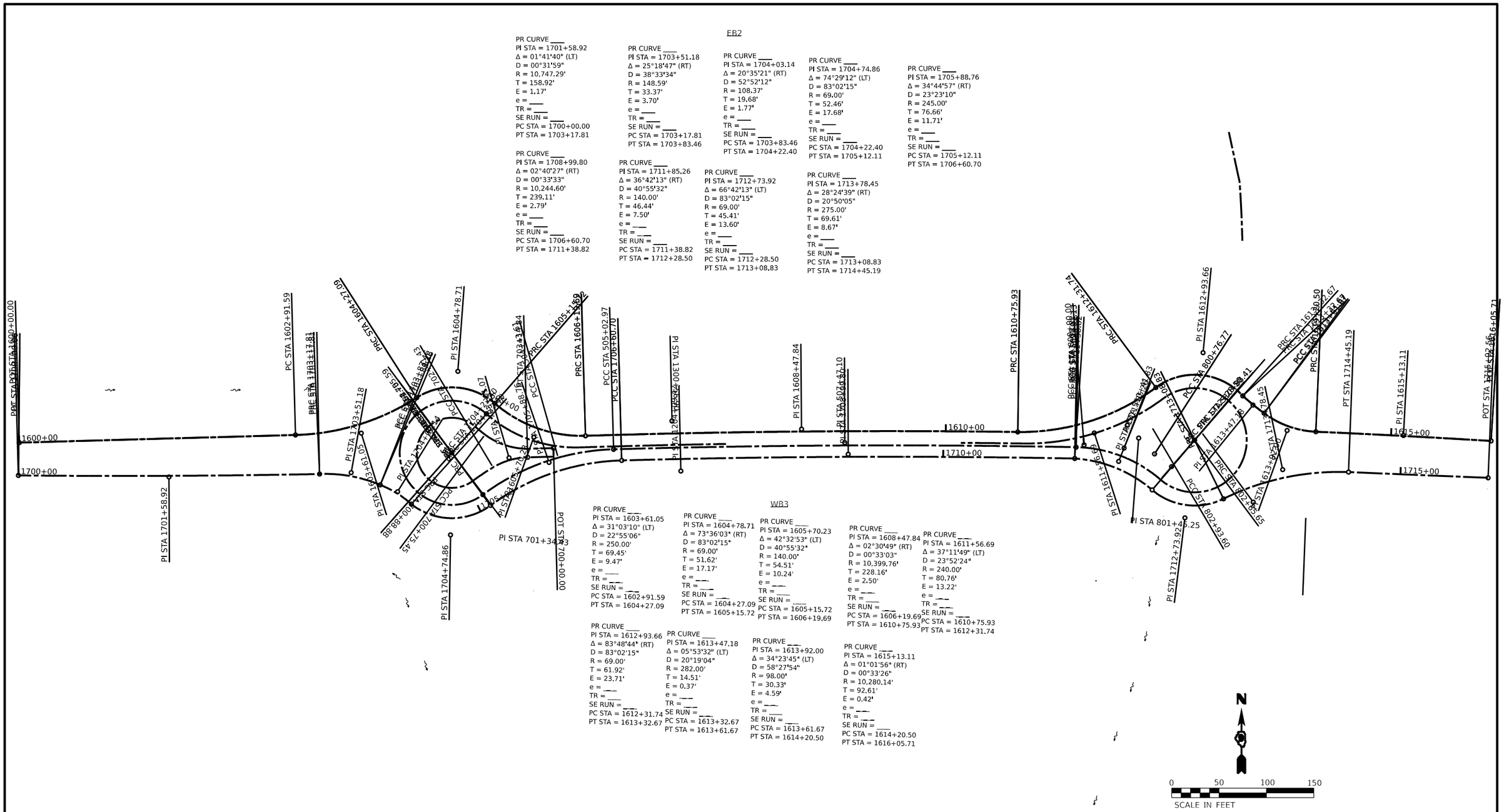

EB2

PR CURVE ____
PI STA = 1701+58.92
Δ = 01°41'40" (LT)
D = 00°31'59"
R = 10,747.29'
T = 158.92'
E = 1.17'
e = ____
TR = ____
SE RUN = ____
PC STA = 1700+00.00
PT STA = 1703+17.81

PR CURVE ____
PI STA = 1703+51.18
Δ = 25°18'47" (RT)
D = 38°33'34"
R = 148.59'
T = 33.37'
E = 3.70'
e = ____
TR = ____
SE RUN = ____
PC STA = 1703+17.81
PT STA = 1703+83.46

PR CURVE ____
PI STA = 1704+03.14
Δ = 20°35'21" (RT)
D = 52°52'12"
R = 108.37'
T = 19.68'
E = 1.77'
e = ____
TR = ____
SE RUN = ____
PC STA = 1703+83.46
PT STA = 1704+22.40

PR CURVE ____
PI STA = 1704+74.86
Δ = 74°29'12" (LT)
D = 83°02'15"
R = 69.00'
T = 52.46'
E = 17.68'
e = ____
TR = ____
SE RUN = ____
PC STA = 1704+22.40
PT STA = 1705+12.11

PR CURVE ____
PI STA = 1705+88.76
Δ = 34°44'57" (RT)
D = 23°23'10"
R = 245.00'
T = 76.66'
E = 11.71'
e = ____
TR = ____
SE RUN = ____
PC STA = 1705+12.11
PT STA = 1706+60.70

PR CURVE ____
PI STA = 1708+99.80
Δ = 02°40'27" (RT)
D = 00°33'33"
R = 10,244.60'
T = 239.11'
E = 2.79'
e = ____
TR = ____
SE RUN = ____
PC STA = 1706+60.70
PT STA = 1711+38.82

PR CURVE ____
PI STA = 1711+85.26
Δ = 36°42'13" (RT)
D = 40°55'32"
R = 140.00'
T = 46.44'
E = 7.50'
e = ____
TR = ____
SE RUN = ____
PC STA = 1711+38.82
PT STA = 1712+28.50

PR CURVE ____
PI STA = 1712+73.92
Δ = 66°42'13" (LT)
D = 83°02'15"
R = 69.00'
T = 45.41'
E = 13.60'
e = ____
TR = ____
SE RUN = ____
PC STA = 1712+28.50
PT STA = 1713+08.83

PR CURVE ____
PI STA = 1713+78.45
Δ = 28°24'39" (RT)
D = 20°50'05"
R = 275.00'
T = 69.61'
E = 8.67'
e = ____
TR = ____
SE RUN = ____
PC STA = 1713+08.83
PT STA = 1714+45.19

WB3

PR CURVE ____
PI STA = 1603+61.05
Δ = 31°03'10" (LT)
D = 22°55'06"
R = 250.00'
T = 69.45'
E = 9.47'
e = ____
TR = ____
SE RUN = ____
PC STA = 1602+91.59
PT STA = 1604+27.09

PR CURVE ____
PI STA = 1604+78.71
Δ = 73°36'03" (RT)
D = 83°02'15"
R = 69.00'
T = 51.62'
E = 17.17'
e = ____
TR = ____
SE RUN = ____
PC STA = 1604+27.09
PT STA = 1605+15.72

PR CURVE ____
PI STA = 1605+70.23
Δ = 42°32'53" (LT)
D = 40°55'32"
R = 140.00'
T = 54.51'
E = 10.24'
e = ____
TR = ____
SE RUN = ____
PC STA = 1605+15.72
PT STA = 1606+19.69

PR CURVE ____
PI STA = 1608+47.84
Δ = 02°30'49" (RT)
D = 00°33'03"
R = 10,399.76'
T = 228.16'
E = 2.50'
e = ____
TR = ____
SE RUN = ____
PC STA = 1606+19.69
PT STA = 1610+75.93

PR CURVE ____
PI STA = 1611+56.69
Δ = 37°11'49" (LT)
D = 23°52'24"
R = 240.00'
T = 80.76'
E = 13.22'
e = ____
TR = ____
SE RUN = ____
PC STA = 1610+75.93
PT STA = 1612+31.74

PR CURVE ____
PI STA = 1612+93.66
Δ = 83°48'44" (RT)
D = 83°02'15"
R = 69.00'
T = 61.92'
E = 23.71'
e = ____
TR = ____
SE RUN = ____
PC STA = 1612+31.74
PT STA = 1613+32.67

PR CURVE ____
PI STA = 1613+47.18
Δ = 05°53'32" (LT)
D = 20°19'04"
R = 282.00'
T = 14.51'
E = 0.37'
e = ____
TR = ____
SE RUN = ____
PC STA = 1613+32.67
PT STA = 1613+61.67

PR CURVE ____
PI STA = 1613+92.00
Δ = 34°23'45" (LT)
D = 58°27'54"
R = 98.00'
T = 30.33'
E = 4.59'
e = ____
TR = ____
SE RUN = ____
PC STA = 1613+61.67
PT STA = 1614+20.50

PR CURVE ____
PI STA = 1615+13.11
Δ = 01°01'56" (RT)
D = 00°33'26"
R = 10,280.14'
T = 92.61'
E = 0.42'
e = ____
TR = ____
SE RUN = ____
PC STA = 1614+20.50
PT STA = 1616+05.71

MODEL: $MODELNAME$
FILE NAME: $FILE$

USER NAME = $USER$	DESIGNED -	REVISED -	
	DRAWN -	REVISED -	
PLOT SCALE = $SCALE$	CHECKED -	REVISED -	
PLOT DATE = $DATE$	DATE -	REVISED -	

STATE OF ILLINOIS
DEPARTMENT OF TRANSPORTATION

PROPOSED GEOPAK ELEMENTS

SCALE: | SHEET OF SHEETS | STA. TO STA.

F.A.P. RTE.	SECTION	COUNTY	TOTAL SHEETS	SHEET NO.
873	(28-5)K-1	FRANKLIN	162	32
		CONTRACT NO. 78814		
		ILLINOIS	FED. AID PROJECT	

CL1100

PR CURVE ____
PI STA = 1101+41.76
Δ = 01°30'35" (LT)
D = 00°31'57"
R = 10,759.29'
T = 141.76'
E = 0.93'
e = ____
TR = ____
SE RUN = ____
PC STA = 1100+00.00
PT STA = 1102+83.50

PR CURVE ____
PI STA = 1103+33.17
Δ = 27°53'45" (RT)
D = 28°38'52"
R = 200.00'
T = 49.67'
E = 6.08'
e = ____
TR = ____
SE RUN = ____
PC STA = 1102+83.50
PT STA = 1103+80.88

PR CURVE ____
PI STA = 1104+24.67
Δ = 43°25'08" (RT)
D = 52°05'13"
R = 110.00'
T = 43.80'
E = 8.40'
e = ____
TR = ____
SE RUN = ____
PC STA = 1103+80.88
PT STA = 1104+64.23

PR CURVE ____
PI STA = 1105+15.38
Δ = 16°37'44" (RT)
D = 16°22'13"
R = 350.00'
T = 51.15'
E = 3.72'
e = ____
TR = ____
SE RUN = ____
PC STA = 1104+64.23
PT STA = 1105+65.81

CL1300

PR CURVE ____
PI STA = 1300+56.90
Δ = 00°38'02" (LT)
D = 00°33'25"
R = 10,288.34'
T = 56.90'
E = 0.16'
e = ____
TR = ____
SE RUN = ____
PC STA = 1300+00.00
PT STA = 1301+13.80

PR CURVE ____
PI STA = 1301+82.29
Δ = 37°48'29" (RT)
D = 28°38'52"
R = 200.00'
T = 68.49'
E = 11.40'
e = ____
TR = ____
SE RUN = ____
PC STA = 1301+13.80
PT STA = 1302+45.78

PR CURVE ____
PI STA = 1302+79.99
Δ = 42°43'05" (LT)
D = 65°28'51"
R = 87.50'
T = 34.22'
E = 6.45'
e = ____
TR = ____
SE RUN = ____
PC STA = 1302+45.78
PT STA = 1303+11.01

PR CURVE ____
PI STA = 1303+33.54
Δ = 23°09'04" (LT)
D = 52°05'13"
R = 110.00'
T = 22.53'
E = 2.28'
e = ____
TR = ____
SE RUN = ____
PC STA = 1303+11.01
PT STA = 1303+55.46

CL2000

PR CURVE ____
PI STA = 2001+34.75
Δ = 109°56'28" (RT)
D = 212°57'28"
R = 10.00'
T = 14.27'
E = 7.42'
e = ____
TR = ____
SE RUN = ____
PC STA = 2001+20.49
PT STA = 2001+39.68

PR CURVE ____
PI STA = 2001+89.14
Δ = 58°57'19" (LT)
D = 65°28'51"
R = 87.50'
T = 49.46'
E = 13.01'
e = ____
TR = ____
SE RUN = ____
PC STA = 2001+39.68
PT STA = 2002+29.71

PR CURVE ____
PI STA = 2003+11.36
Δ = 37°34'40" (RT)
D = 23°52'24"
R = 240.00'
T = 81.65'
E = 13.51'
e = ____
TR = ____
SE RUN = ____
PC STA = 2002+29.71
PT STA = 2003+87.12

PR CURVE ____
PI STA = 2004+20.72
Δ = 00°22'27" (LT)
D = 00°33'25"
R = 10,288.34'
T = 33.60'
E = 0.05'
e = ____
TR = ____
SE RUN = ____
PC STA = 2003+87.12
PT STA = 2004+54.32

CL2300

PR CURVE ____
PI STA = 2300+29.36
Δ = 89°55'00" (RT)
D = 21°58'19"
R = 15.00'
T = 14.98'
E = 6.20'
e = ____
TR = ____
SE RUN = ____
PC STA = 2300+14.38
PT STA = 2300+37.92

PR CURVE ____
PI STA = 2302+78.88
Δ = 75°20'44" (RT)
D = 57°17'45"
R = 100.00'
T = 77.21'
E = 26.34'
e = ____
TR = ____
SE RUN = ____
PC STA = 2302+01.67
PT STA = 2303+33.17

PR CURVE ____
PI STA = 2303+70.19
Δ = 14°04'12" (RT)
D = 19°05'55"
R = 300.00'
T = 37.02'
E = 2.28'
e = ____
TR = ____
SE RUN = ____
PC STA = 2303+33.17
PT STA = 2304+06.84

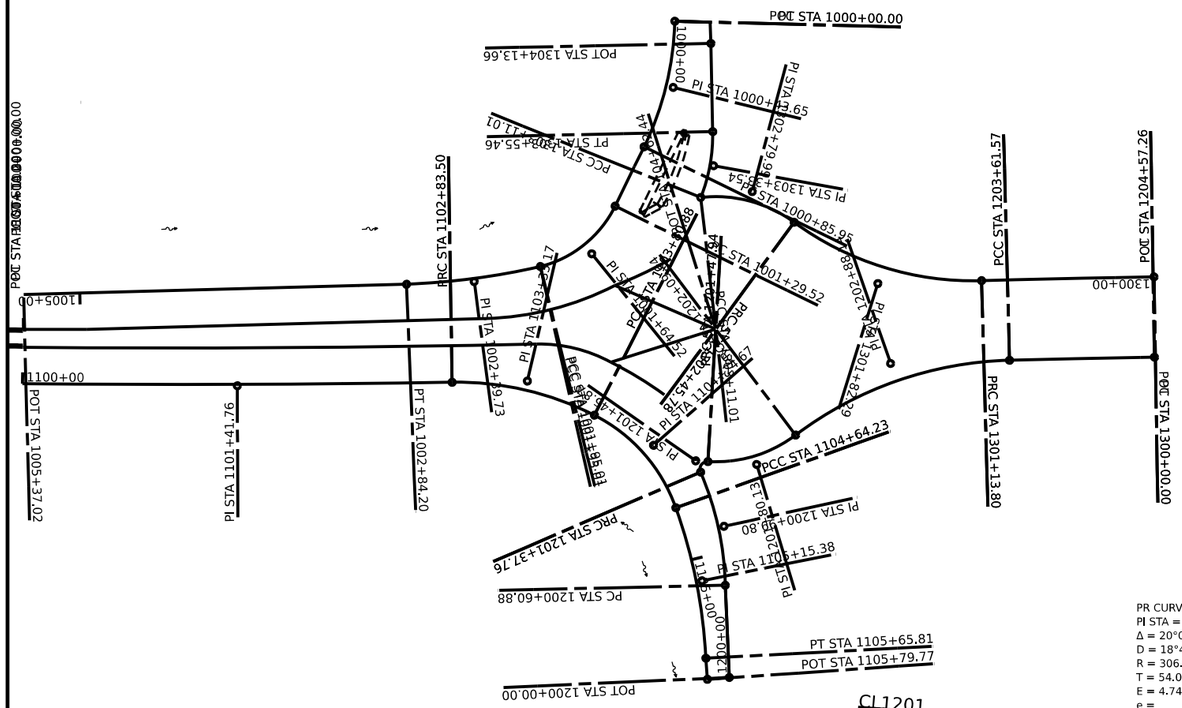

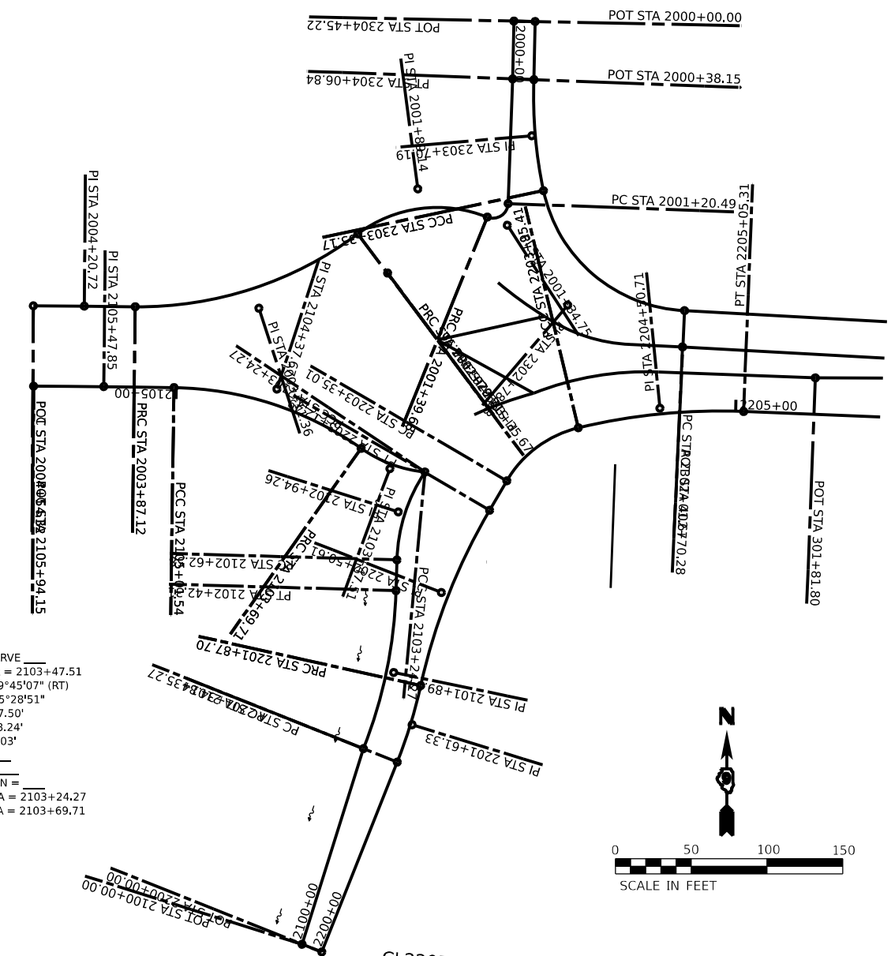

CL2100

PR CURVE ____
PI STA = 2101+89.34
Δ = 20°02'31" (LT)
D = 18°43'27"
R = 306.00'
T = 54.07'
E = 4.74'
e = ____
TR = ____
SE RUN = ____
PC STA = 2101+35.27
PT STA = 2102+42.31

PR CURVE ____
PI STA = 2102+94.26
Δ = 32°08'02" (RT)
D = 52°05'13"
R = 110.00'
T = 31.68'
E = 4.47'
e = ____
TR = ____
SE RUN = ____
PC STA = 2102+62.58
PT STA = 2103+24.27

PR CURVE ____
PI STA = 2103+47.51
Δ = 29°45'07" (RT)
D = 65°28'51"
R = 87.50'
T = 23.24'
E = 3.03'
e = ____
TR = ____
SE RUN = ____
PC STA = 2103+24.27
PT STA = 2103+69.71

PR CURVE ____
PI STA = 2104+37.67
Δ = 34°20'03" (LT)
D = 26°02'37"
R = 220.00'
T = 67.96'
E = 10.26'
e = ____
TR = ____
SE RUN = ____
PC STA = 2103+69.71
PT STA = 2105+01.54

PR CURVE ____
PI STA = 2105+47.85
Δ = 00°31'06" (LT)
D = 00°33'35"
R = 10,235.34'
T = 46.31'
E = 0.10'
e = ____
TR = ____
SE RUN = ____
PC STA = 2105+01.54
PT STA = 2105+94.15

CL1002

PR CURVE ____
PI STA = 1000+43.65
Δ = 24°37'25" (RT)
D = 28°38'52"
R = 200.00'
T = 43.65'
E = 4.71'
e = ____
TR = ____
SE RUN = ____
PC STA = 1000+00.00
PT STA = 1000+85.95

PR CURVE ____
PI STA = 1001+64.52
Δ = 50°01'47" (RT)
D = 76°23'40"
R = 75.00'
T = 35.00'
E = 7.76'
e = ____
TR = ____
SE RUN = ____
PC STA = 1001+29.52
PT STA = 1001+95.01

PR CURVE ____
PI STA = 1002+39.73
Δ = 10°31'52" (RT)
D = 11°48'28"
R = 485.24'
T = 44.72'
E = 2.06'
e = ____
TR = ____
SE RUN = ____
PC STA = 1001+95.01
PT STA = 1002+84.20

CL1201

PR CURVE ____
PI STA = 1200+99.80
Δ = 22°01'28" (LT)
D = 28°38'52"
R = 200.00'
T = 38.92'
E = 3.75'
e = ____
TR = ____
SE RUN = ____
PC STA = 1200+60.88
PT STA = 1201+37.76

PR CURVE ____
PI STA = 1201+45.87
Δ = 116°39'48" (RT)
D = 65°54'56"
R = 5.00'
T = 8.11'
E = 4.52'
e = ____
TR = ____
SE RUN = ____
PC STA = 1201+37.76
PT STA = 1201+47.95

PR CURVE ____
PI STA = 1201+80.13
Δ = 40°24'02" (LT)
D = 65°28'51"
R = 87.50'
T = 32.19'
E = 5.73'
e = ____
TR = ____
SE RUN = ____
PC STA = 1201+47.94
PT STA = 1202+09.64

PR CURVE ____
PI STA = 1202+88.14
Δ = 35°31'51" (RT)
D = 23°23'10"
R = 245.00'
T = 78.50'
E = 12.27'
e = ____
TR = ____
SE RUN = ____
PC STA = 1202+09.64
PT STA = 1203+61.57

PR CURVE ____
PI STA = 1204+09.42
Δ = 00°32'08" (RT)
D = 00°33'35"
R = 10,235.34'
T = 47.85'
E = 0.11'
e = ____
TR = ____
SE RUN = ____
PC STA = 1203+61.57
PT STA = 1204+57.26

CL2205

PR CURVE ____
PI STA = 2202+50.61
Δ = 17°52'29" (RT)
D = 14°19'26"
R = 400.00'
T = 62.91'
E = 4.92'
e = ____
TR = ____
SE RUN = ____
PC STA = 2201+87.70
PT STA = 2203+12.49

PR CURVE ____
PI STA = 2204+50.71
Δ = 15°44'31" (RT)
D = 14°19'26"
R = 400.00'
T = 55.30'
E = 3.80'
e = ____
TR = ____
SE RUN = ____
PC STA = 2203+95.41
PT STA = 2205+05.31

PR CURVE ____
PI STA = 2203+66.96
Δ = 46°08'57" (RT)
D = 76°23'40"
R = 75.00'
T = 31.95'
E = 6.52'
e = ____
TR = ____
SE RUN = ____
PC STA = 2203+35.01
PT STA = 2203+95.41

PR CURVE ____
PI STA = 2201+61.33
Δ = 09°10'45" (LT)
D = 17°21'44"
R = 330.00'
T = 26.49'
E = 1.06'
e = ____
TR = ____
SE RUN = ____
PC STA = 2201+34.84
PT STA = 2201+87.70

MODEL: $MODELNAME$
FILE NAME: $FILEL$

USER NAME = $USER$	DESIGNED -	REVISED -	
	DRAWN -	REVISED -	
PLOT SCALE = $SCALE$	CHECKED -	REVISED -	
PLOT DATE = $DATE$	DATE -	REVISED -	

STATE OF ILLINOIS
DEPARTMENT OF TRANSPORTATION

PROPOSED GEOPAK ELEMENTS

SCALE: SHEET OF SHEETS STA. TO STA.

F.A.P. RTE.	SECTION	COUNTY	TOTAL SHEETS	SHEET NO.
873	(28-5)K-1	FRANKLIN	162	33
		CONTRACT NO. 78814		
		ILLINOIS	FED. AID PROJECT	

CL700

PR CURVE ____
PI STA = 700+51.35
Δ = 38°19'40" (RT)
D = 76°23'40"
R = 75.00'
T = 26.06'
E = 4.40'
e = ____
TR = ____
SE RUN = ____
PC STA = 700+25.28
PT STA = 700+75.45

PR CURVE ____
PI STA = 700+82.1
Δ = 04°52'02" (RT)
D = 36°15'47"
R = 158.00'
T = 6.71'
E = 0.14'
e = ____
TR = ____
SE RUN = ____
PC STA = 700+75.5
PT STA = 700+88.88

PR CURVE ____
PI STA = 701+34.43
Δ = 258°09'55" (LT)
D = 154°51'12"
R = 37.00'
T = 45.56'
E = 21.69'
e = ____
TR = ____
SE RUN = ____ CL700
PC STA = 700+88.88
PT STA = 702+55.59

PR CURVE ____
PI STA = 702+68.52
Δ = 05°37'47" (RT)
D = 21°47'08"
R = 263.00'
T = 12.93'
E = 0.32'
e = ____
TR = ____
SE RUN = ____
PC STA = 702+55.59
PT STA = 702+81.43

PR CURVE ____
PI STA = 703+01.07
Δ = 29°20'26" (RT)
D = 76°23'40"
R = 75.00'
T = 19.63'
E = 2.53'
e = ____
TR = ____
SE RUN = ____
PC STA = 702+81.43
PT STA = 703+19.84

CL800

PR CURVE ____
PI STA = 800+53.25
Δ = 37°18'47" (RT)
D = 76°23'40"
R = 75.00'
T = 25.32'
E = 4.16'
e = ____
TR = ____
SE RUN = ____
PC STA = 800+27.93
PT STA = 800+76.77

PR CURVE ____
PI STA = 800+88.04
Δ = 08°09'32" (RT)
D = 36°15'47"
R = 158.00'
T = 11.27'
E = 0.40'
e = ____
TR = ____
SE RUN = ____
PC STA = 800+76.77
PT STA = 800+99.37

PR CURVE ____
PI STA = 801+45.25
Δ = 257°38'41" (LT)
D = 154°51'12"
R = 37.00'
T = 45.98'
E = 22.02'
e = ____
TR = ____
SE RUN = ____
PC STA = 800+99.27
PT STA = 802+65.65

PR CURVE ____
PI STA = 802+79.64
Δ = 06°12'25" (RT)
D = 22°12'28"
R = 258.00'
T = 13.99'
E = 0.38'
e = ____
TR = ____
SE RUN = ____
PC STA = 802+65.65
PT STA = 802+93.60

PR CURVE ____
PI STA = 803+10.84
Δ = 25°53'48" (RT)
D = 76°23'40"
R = 75.00'
T = 17.24'
E = 1.96'
e = ____
TR = ____
SE RUN = ____
PC STA = 802+93.60
PT STA = 803+27.50

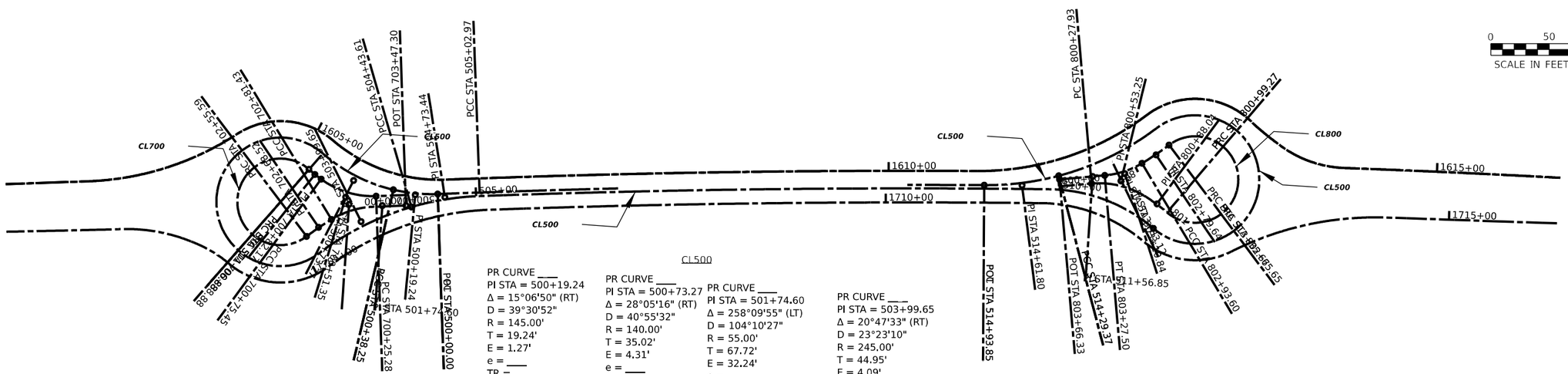

CL500

PR CURVE ____
PI STA = 500+19.24
Δ = 15°06'50" (RT)
D = 39°30'52"
R = 145.00'
T = 19.24'
E = 1.27'
e = ____
TR = ____
SE RUN = ____
PC STA = 500+00.00
PT STA = 500+38.25

PR CURVE ____
PI STA = 500+73.27
Δ = 28°05'16" (RT)
D = 40°55'32"
R = 140.00'
T = 35.02'
E = 4.31'
e = ____
TR = ____
SE RUN = ____
PC STA = 500+38.25
PT STA = 501+06.88

PR CURVE ____
PI STA = 501+74.60
Δ = 258°09'55" (LT)
D = 104°10'27"
R = 55.00'
T = 67.72'
E = 32.24'
e = ____
TR = ____
SE RUN = ____
PC STA = 501+06.88
PT STA = 503+54.70

PR CURVE ____
PI STA = 503+99.65
Δ = 20°47'33" (RT)
D = 23°23'10"
R = 245.00'
T = 44.95'
E = 4.09'
e = ____
TR = ____
SE RUN = ____
PC STA = 503+54.70
PT STA = 504+43.61

PR CURVE ____
PI STA = 504+73.44
Δ = 14°10'16" (RT)
D = 23°52'24"
R = 240.00'
T = 29.83'
E = 1.85'
e = ____
TR = ____
SE RUN = ____
PC STA = 504+43.61
PT STA = 505+02.97

PR CURVE ____
PI STA = 507+47.10
Δ = 02°43'32" (RT)
D = 00°33'30"
R = 10,261.87'
T = 244.12'
E = 2.90'
e = ____
TR = ____
SE RUN = ____
PC STA = 505+02.97
PT STA = 509+91.13

PR CURVE ____
PI STA = 510+41.83
Δ = 39°48'55" (RT)
D = 40°55'32"
R = 140.00'
T = 50.70'
E = 8.90'
e = ____
TR = ____
SE RUN = ____
PC STA = 509+91.13
PT STA = 510+88.41

PR CURVE ____
PI STA = 511+56.85
Δ = 257°34'32" (LT)
D = 104°10'27"
R = 55.00'
T = 68.44'
E = 32.80'
e = ____
TR = ____
SE RUN = ____
PC STA = 510+88.41
PT STA = 513+35.67

PR CURVE ____
PI STA = 513+83.12
Δ = 22°22'08" (RT)
D = 23°52'24"
R = 240.00'
T = 47.45'
E = 4.65'
e = ____
TR = ____
SE RUN = ____
PC STA = 513+35.67
PT STA = 514+29.37

PR CURVE ____
PI STA = 514+61.80
Δ = 15°04'47" (RT)
D = 23°23'10"
R = 245.00'
T = 32.43'
E = 2.14'
e = ____
TR = ____
SE RUN = ____
PC STA = 514+29.37
PT STA = 514+93.85

MODEL: $MODELN$AME$
FILE NAME: $FILEL$

USER NAME = $USER$	DESIGNED -	REVISED -	
	DRAWN -	REVISED -	
PLOT SCALE = $SCALE$	CHECKED -	REVISED -	
PLOT DATE = $DATE$	DATE -	REVISED -	

STATE OF ILLINOIS
DEPARTMENT OF TRANSPORTATION

PROPOSED GEOPAK ELEMENTS

SCALE: | SHEET OF SHEETS | STA. TO STA.

F.A.P. RTE.	SECTION	COUNTY	TOTAL SHEETS	SHEET NO.
873	(28-5)K-1	FRANKLIN	162	34
		CONTRACT NO. 78814		
	ILLINOIS	FED. AID PROJECT		

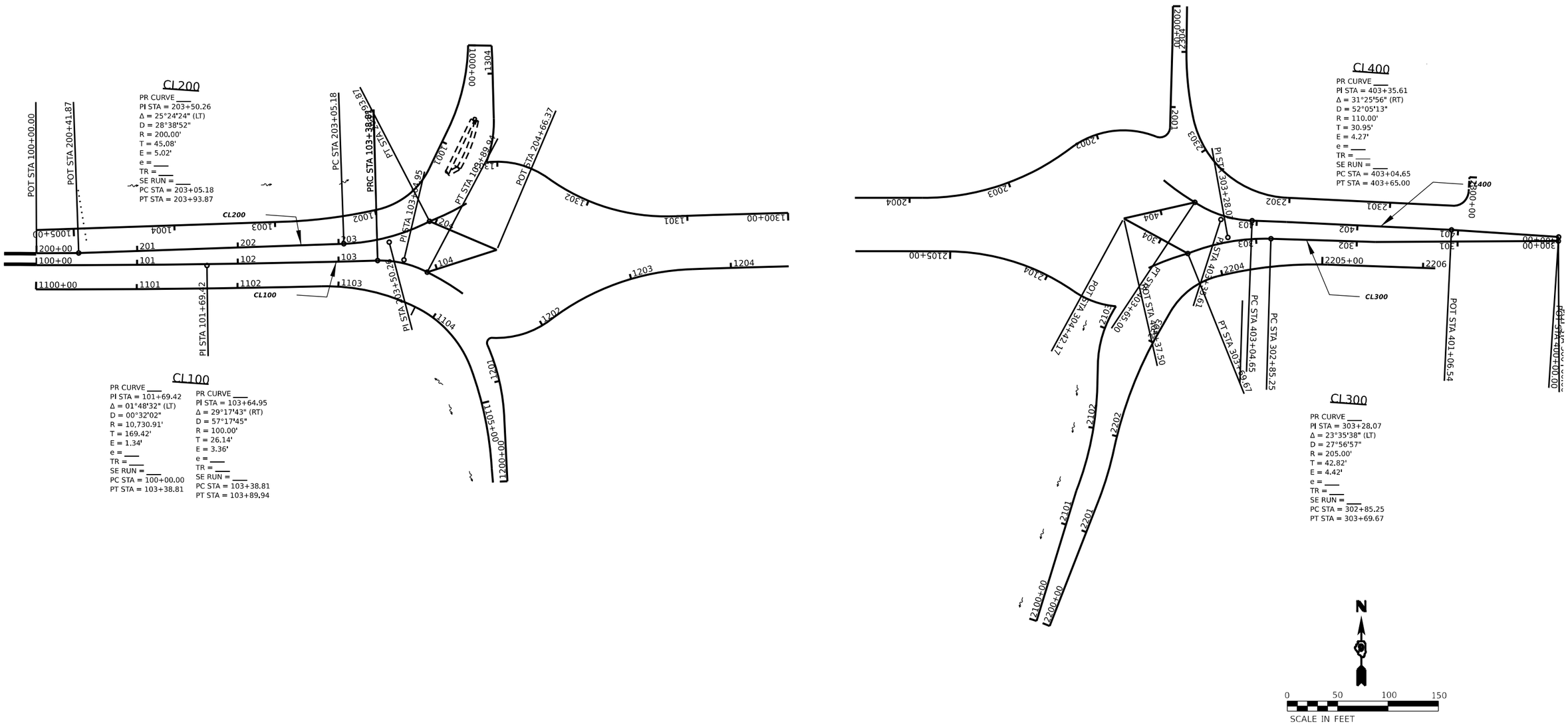

MODEL: $MODELNAME$
FILE NAME: $FILE$

USER NAME = $USER$	DESIGNED -	REVISED -	
	DRAWN -	REVISED -	
PLOT SCALE = $SCALE$	CHECKED -	REVISED -	
PLOT DATE = $DATE$	DATE -	REVISED -	

STATE OF ILLINOIS
DEPARTMENT OF TRANSPORTATION

PROPOSED GEOPAK ELEVATIONS

SCALE: SHEET OF SHEETS STA. TO STA.

F.A.P. RTE.	SECTION	COUNTY	TOTAL SHEETS	SHEET NO.
873	(28-5)K-1	FRANKLIN	162	35
		CONTRACT NO. 78814		
		ILLINOIS	FED. AID PROJECT	

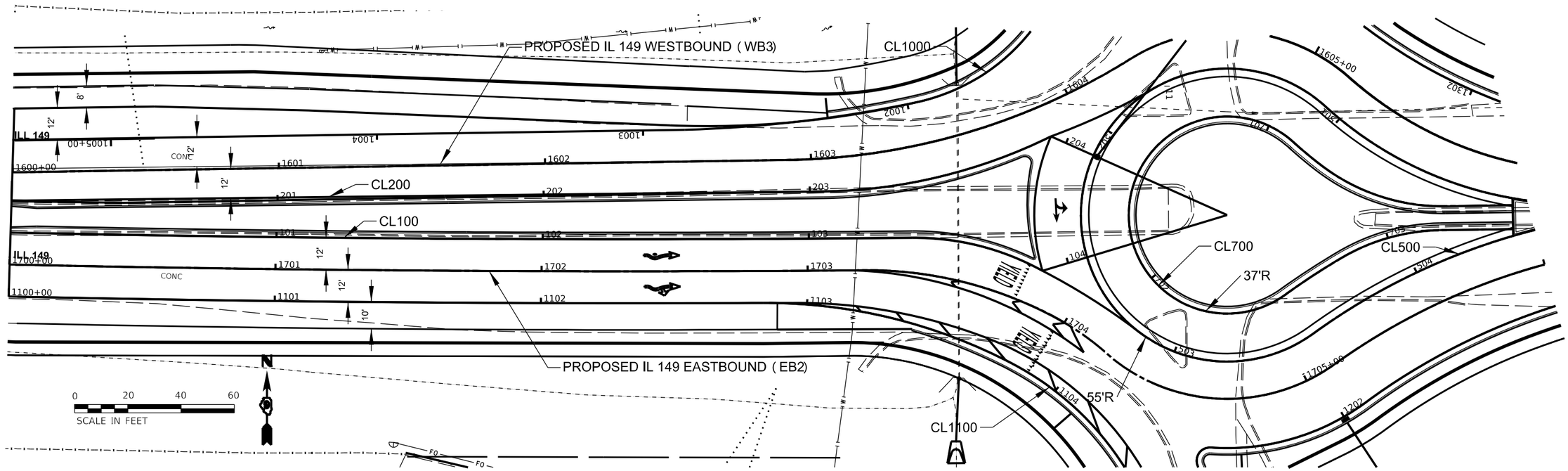

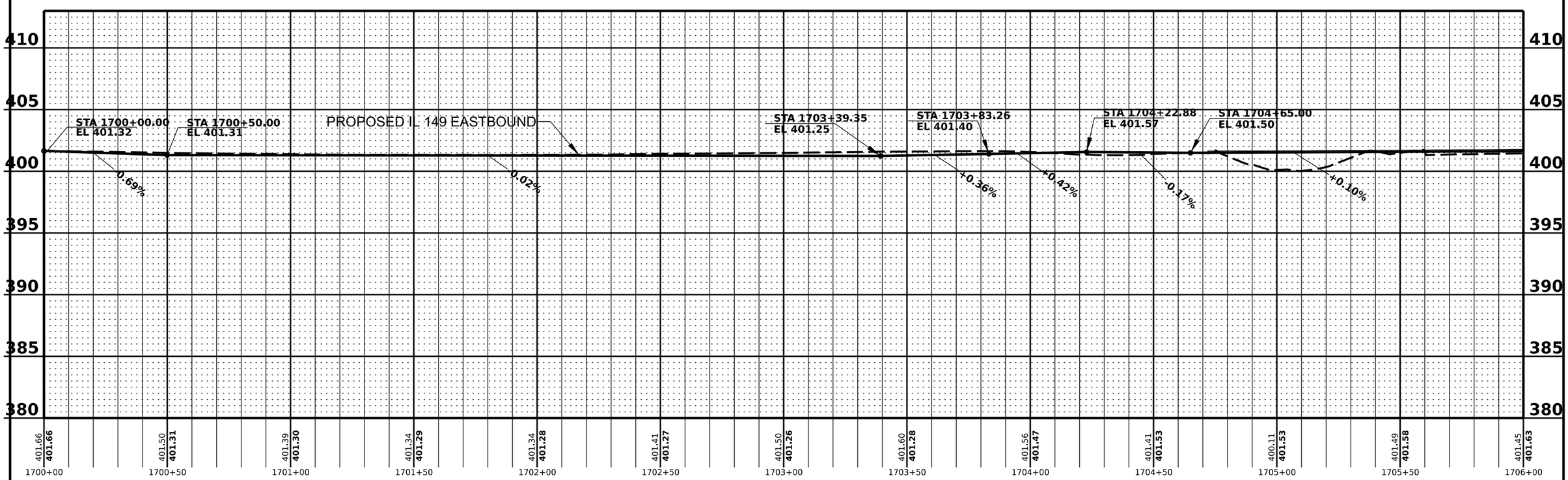

MODEL: $MODELNAME$
FILE NAME: $FILE$

USER NAME = $USER$	DESIGNED -	REVISED -	
	DRAWN -	REVISED -	
PLOT SCALE = $SCALE$	CHECKED -	REVISED -	
PLOT DATE = $DATE$	DATE -	REVISED -	

STATE OF ILLINOIS
DEPARTMENT OF TRANSPORTATION

PLAN PROFILE
IL 149 EASTBOUND

SCALE: SHEET OF SHEETS STA. TO STA.

F.A.P. RTE.	SECTION	COUNTY	TOTAL SHEETS	SHEET NO.
873	(28-5)K-1	FRANKLIN	162	36
		CONTRACT NO. 78814		
		ILLINOIS FED. AID PROJECT		

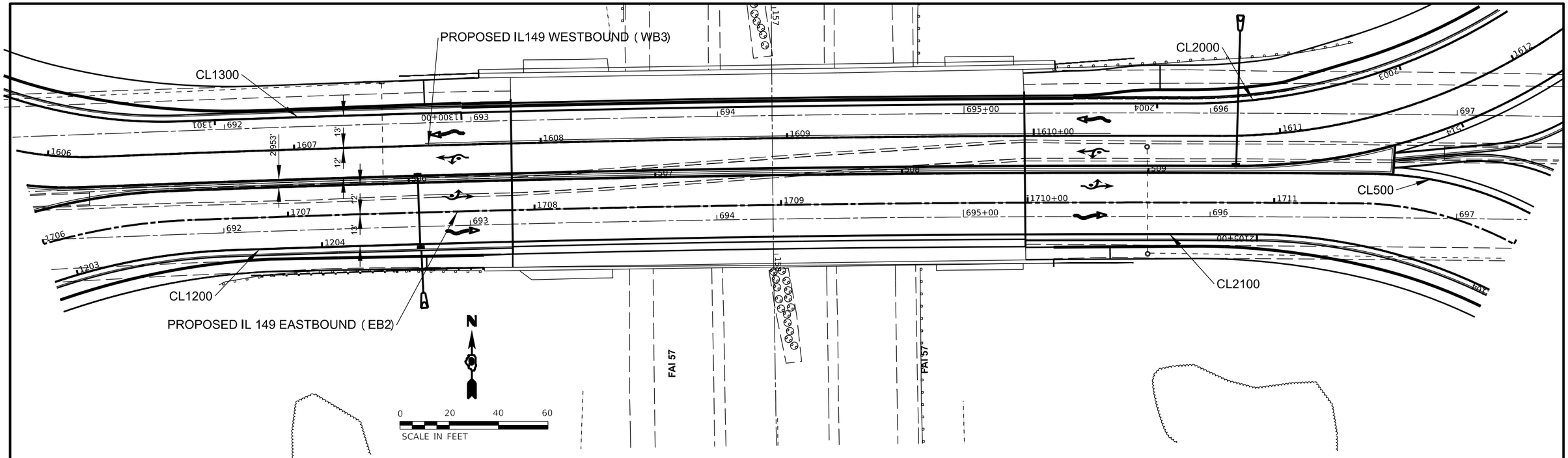

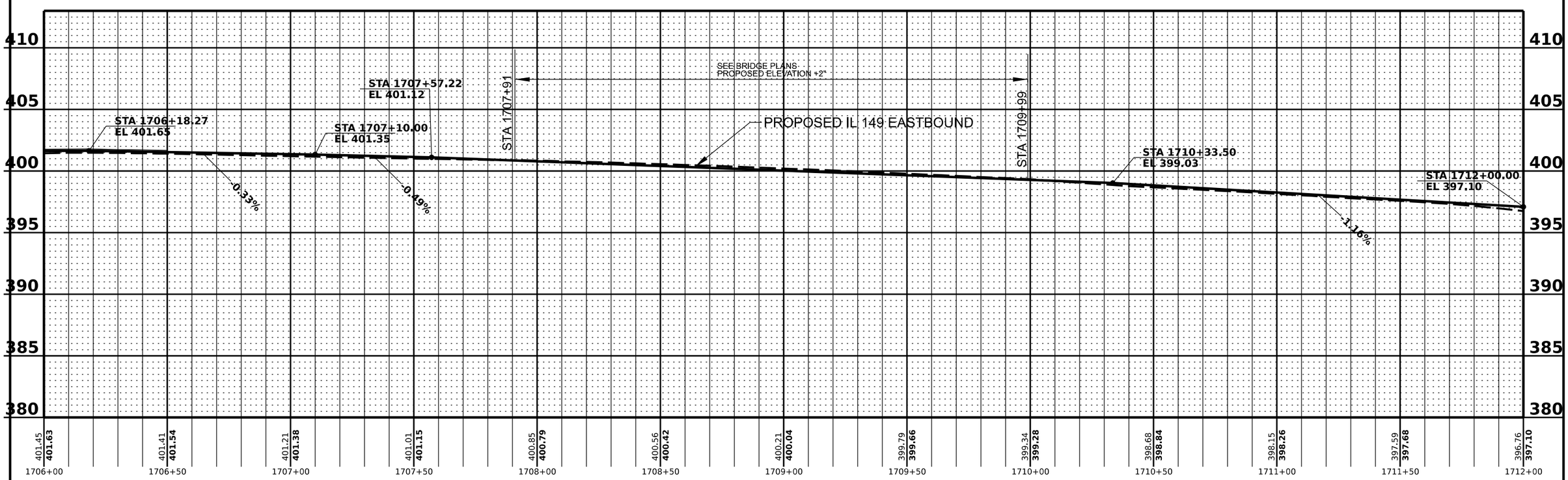

MODEL: $MODELNAME$
FILE NAME: $FILE$

USER NAME = $USER$	DESIGNED -	REVISED -	
	DRAWN -	REVISED -	
PLOT SCALE = $SCALE$	CHECKED -	REVISED -	
PLOT DATE = $DATE$	DATE -	REVISED -	

STATE OF ILLINOIS
DEPARTMENT OF TRANSPORTATION

PLAN PROFILE
IL 149 EASTBOUND

SCALE: SHEET OF SHEETS STA. TO STA.

F.A.P. RTE.	SECTION	COUNTY	TOTAL SHEETS	SHEET NO.
873	(28-5)K-1	FRANKLIN	162	37
		CONTRACT NO. 78814		
		ILLINOIS FED. AID PROJECT		

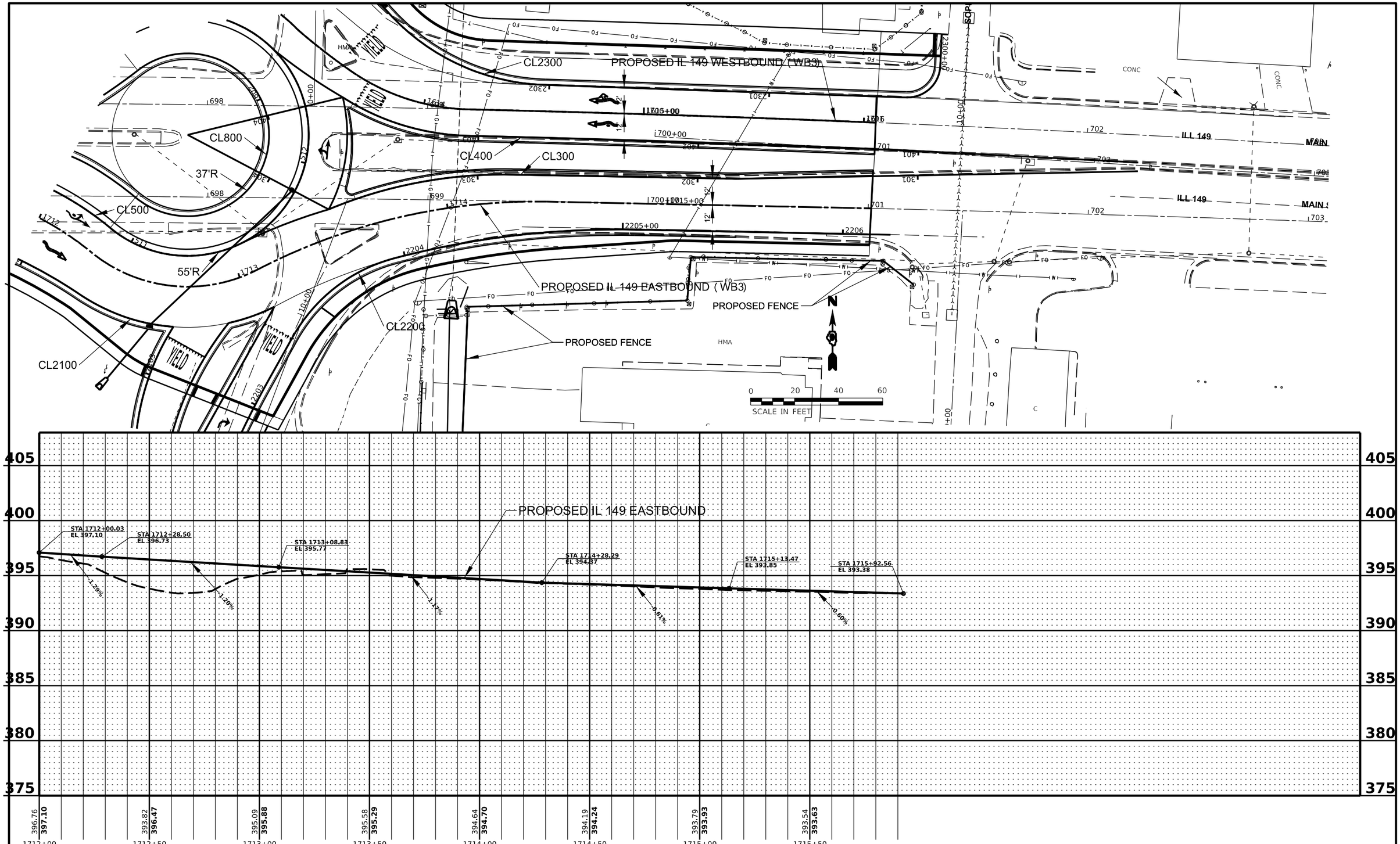

MODEL: $MODELNAME$
FILE NAME: $FILE$

USER NAME = $USER$	DESIGNED -	REVISED -	
	DRAWN -	REVISED -	
PLOT SCALE = $SCALE$	CHECKED -	REVISED -	
PLOT DATE = $DATE$	DATE -	REVISED -	

STATE OF ILLINOIS
DEPARTMENT OF TRANSPORTATION

PLAN PROFILE
IL 149 EASTBOUND

SCALE: SHEET OF SHEETS STA. TO STA.

F.A.P. RTE.	SECTION	COUNTY	TOTAL SHEETS	SHEET NO.
873	(28-5)K-1	FRANKLIN	162	38
		CONTRACT NO. 78814		
		ILLINOIS FED. AID PROJECT		

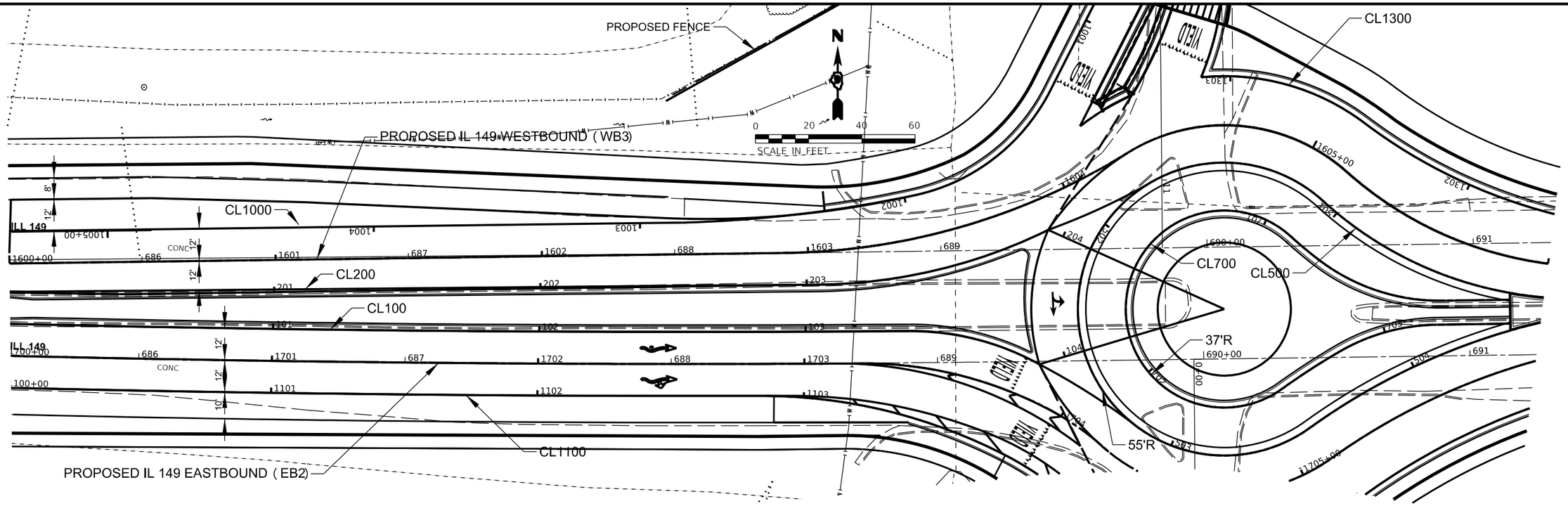

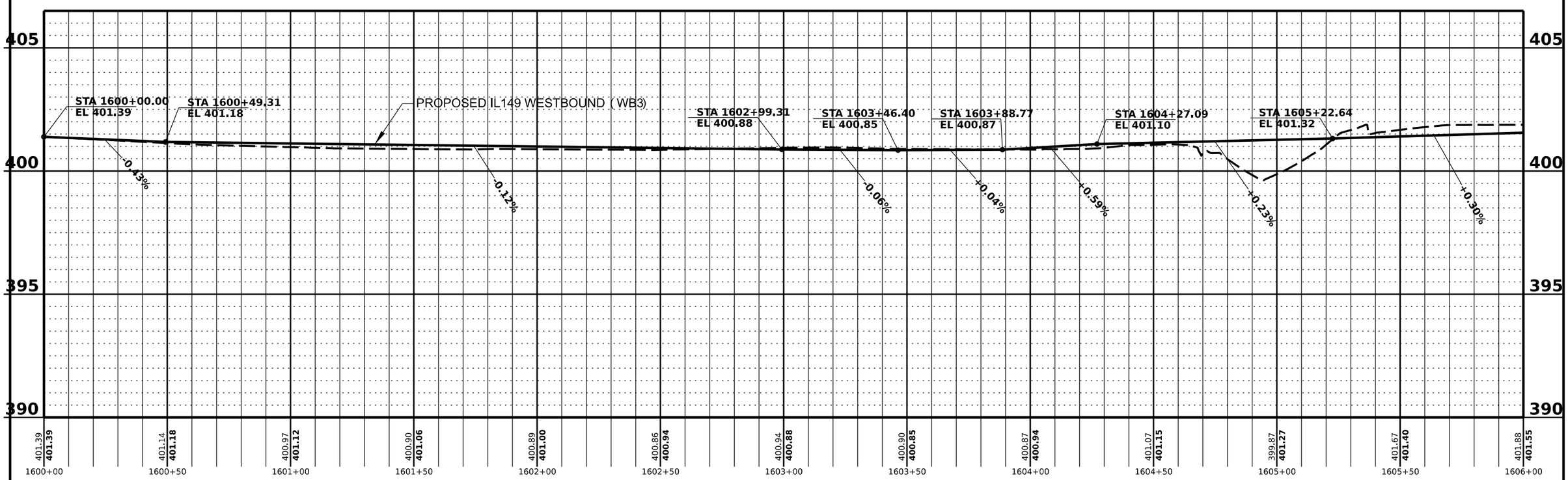

MODEL: $MODELNAME$
FILE NAME: $FILEL$

USER NAME = $USER$	DESIGNED -	REVISED -	
	DRAWN -	REVISED -	
PLOT SCALE = $SCALE$	CHECKED -	REVISED -	
PLOT DATE = $DATE$	DATE -	REVISED -	

STATE OF ILLINOIS
DEPARTMENT OF TRANSPORTATION

PLAN PROFILE
IL 149 WESTBOUND

SCALE: SHEET OF SHEETS STA. TO STA.

F.A.P. RTE.	SECTION	COUNTY	TOTAL SHEETS	SHEET NO.
873	(28-5)K-1	FRANKLIN	162	39
		CONTRACT NO. 78814		
		ILLINOIS FED. AID PROJECT		

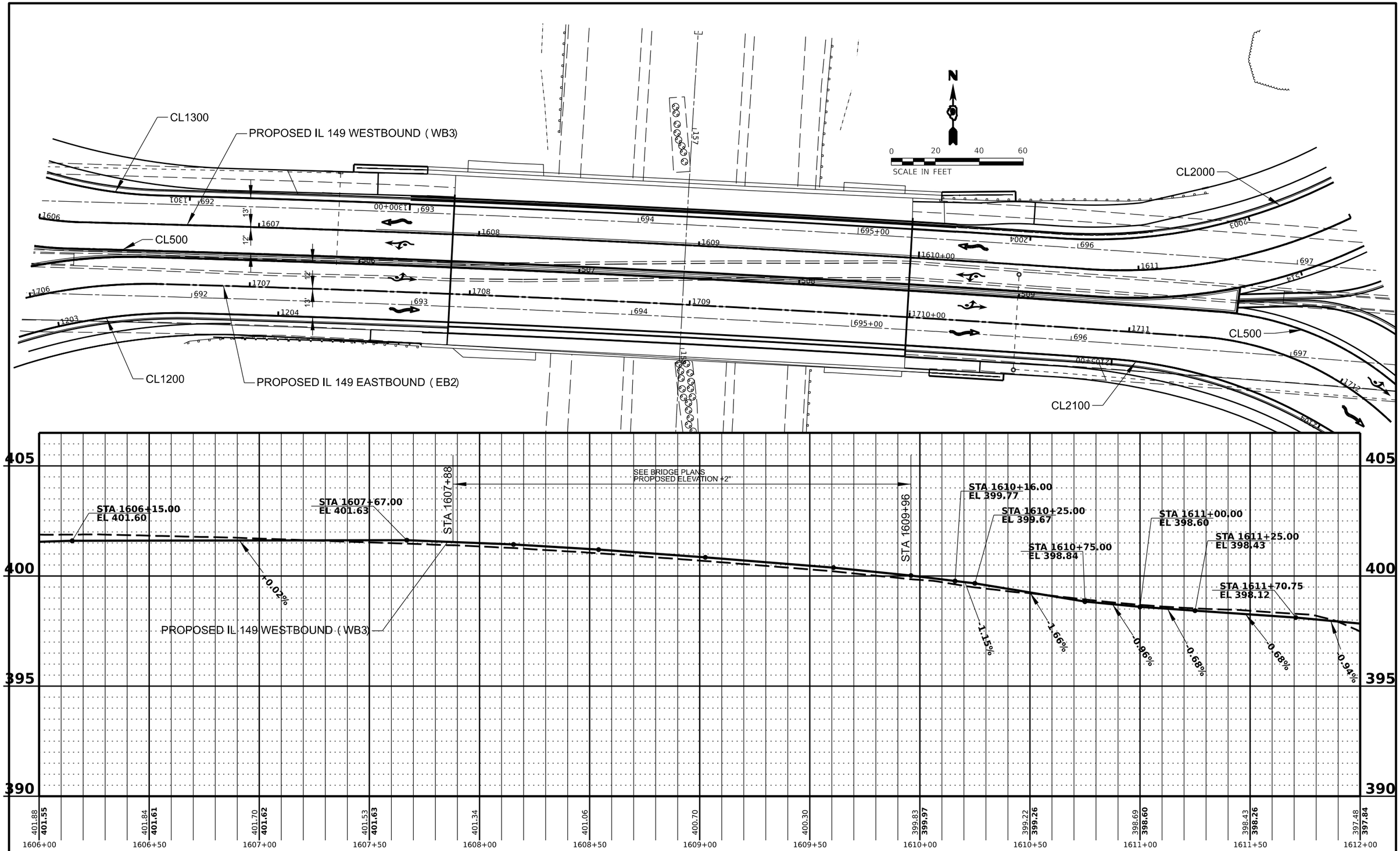

MODEL: $MODELNAME$
FILE NAME: $FILE$

USER NAME = $USER$	DESIGNED -	REVISED -	
	DRAWN -	REVISED -	
PLOT SCALE = $SCALE$	CHECKED -	REVISED -	
PLOT DATE = $DATE$	DATE -	REVISED -	

STATE OF ILLINOIS
DEPARTMENT OF TRANSPORTATION

PLAN PROFILE
IL 149 WESTBOUND

SCALE: SHEET OF SHEETS STA. TO STA.

F.A.P. RTE.	SECTION	COUNTY	TOTAL SHEETS	SHEET NO.
873	(28-5)K-1	FRANKLIN	162	40
		CONTRACT NO. 78814		
	ILLINOIS	FED. AID PROJECT		

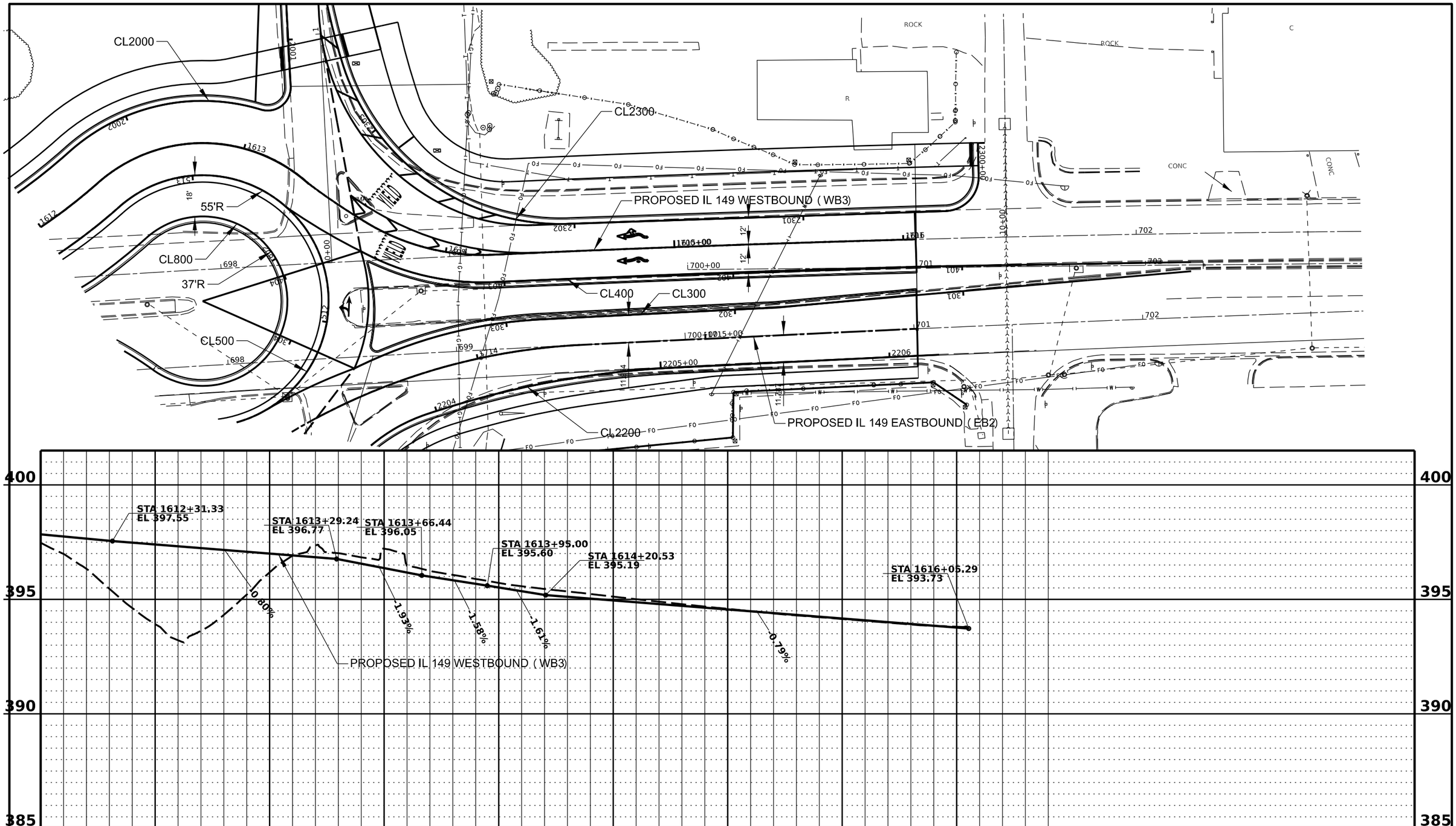

USER NAME = $USER$	DESIGNED -	REVISED -	
	DRAWN -	REVISED -	
PLOT SCALE = $SCALE$	CHECKED -	REVISED -	
PLOT DATE = $DATE$	DATE -	REVISED -	

STATE OF ILLINOIS
DEPARTMENT OF TRANSPORTATION

PLAN PROFILE
IL 149 WESTBOUND

SCALE: SHEET OF SHEETS STA. TO STA.

F.A.P. RTE.	SECTION	COUNTY	TOTAL SHEETS	SHEET NO.
873	(28-5)K-1	FRANKLIN	162	41

CONTRACT NO. 78814

ILLINOIS FED. AID PROJECT

MODEL: $MODELNAME$
FILE NAME: $FILE$

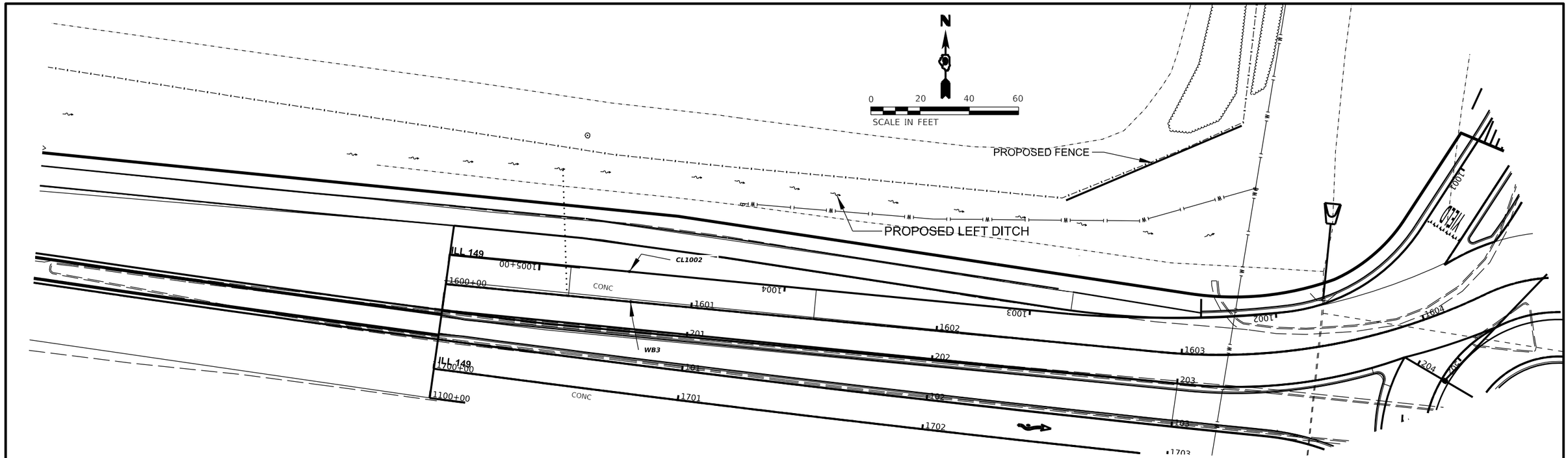

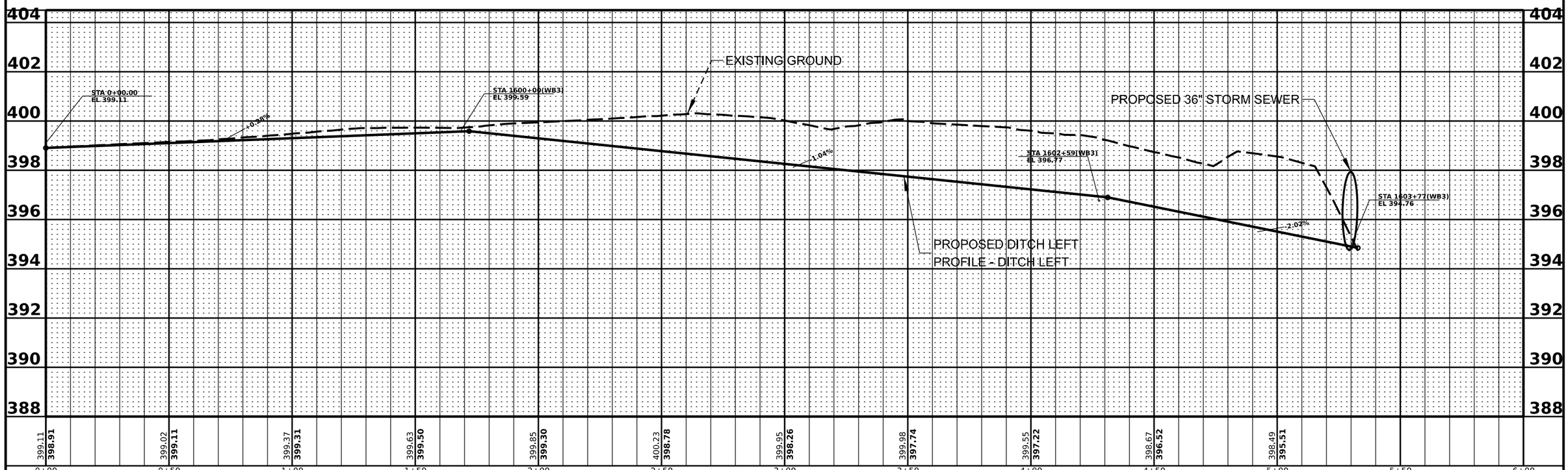

PLAN		BY	DATE
	SURVEYED		
	PLOTTED		
	ALIGNMENT CHECKED		
NOTE BOOK	RT. OF WAY CHECKED		
NO.	CADD FILE NAME		

PROFILE		BY	DATE
	SURVEYED		
	PLOTTED		
	GRADES CHECKED		
NOTE BOOK	B.M. NOTED		
NO.	STRUCTURE NOTAT'NS CH'KD		

MODEL: $MODELNAME$
FILE NAME: $FILEL$

USER NAME = $USER$	DESIGNED -	REVISED -	
	DRAWN -	REVISED -	
PLOT SCALE = $SCALE$	CHECKED -	REVISED -	
PLOT DATE = $DATE$	DATE -	REVISED -	

STATE OF ILLINOIS
DEPARTMENT OF TRANSPORTATION

DITCH PROFILE IL149 LEFT

SCALE: SHEET OF SHEETS STA. TO STA.

F.A.P. RTE.	SECTION	COUNTY	TOTAL SHEETS	SHEET NO.
873	(28-5)K-1	FRANKLIN	162	42
		CONTRACT NO. 78814		
	ILLINOIS	FED. AID PROJECT		

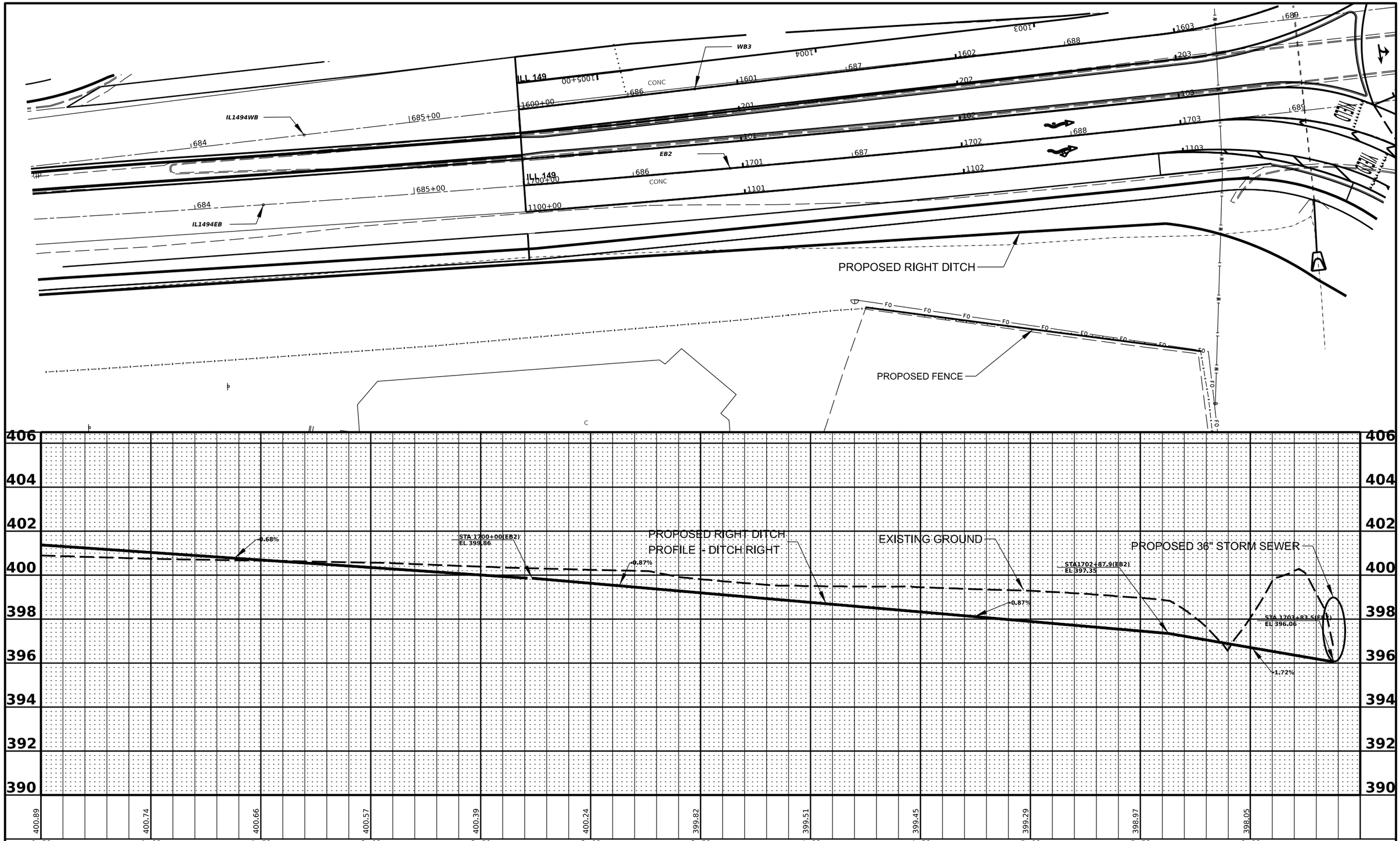

PLAN
NOTE BOOK NO.
SURVEYED
PLOTTED
ALIGNMENT CHECKED
RT. OF WAY CHECKED
CADD FILE NAME
BY
DATE

PROFILE
NOTE BOOK NO.
SURVEYED
PLOTTED
GRADES CHECKED
B.M. NOTED
STRUCTURE NOTAT'NS CH'KD
BY
DATE

MODEL: $MODELNAME$
FILE NAME: $FILE$

USER NAME = $USER$	DESIGNED -	REVISED -	
	DRAWN -	REVISED -	
PLOT SCALE = $SCALE$	CHECKED -	REVISED -	
PLOT DATE = $DATE$	DATE -	REVISED -	

STATE OF ILLINOIS
DEPARTMENT OF TRANSPORTATION

DITCH PROFILE IL 149 RIGHT

SCALE: SHEET OF SHEETS STA. TO STA.

F.A.P. RTE.	SECTION	COUNTY	TOTAL SHEETS	SHEET NO.
873	(28-5)K-1	FRANKLIN	162	43
		CONTRACT NO. 78814		
	ILLINOIS	FED. AID PROJECT		

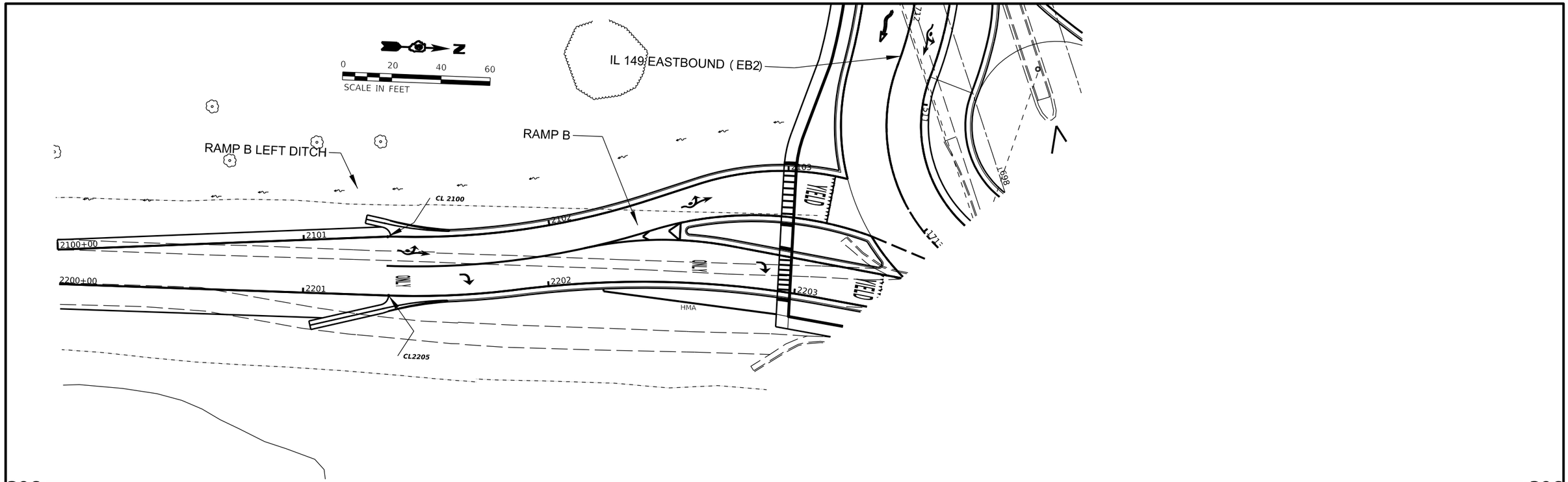

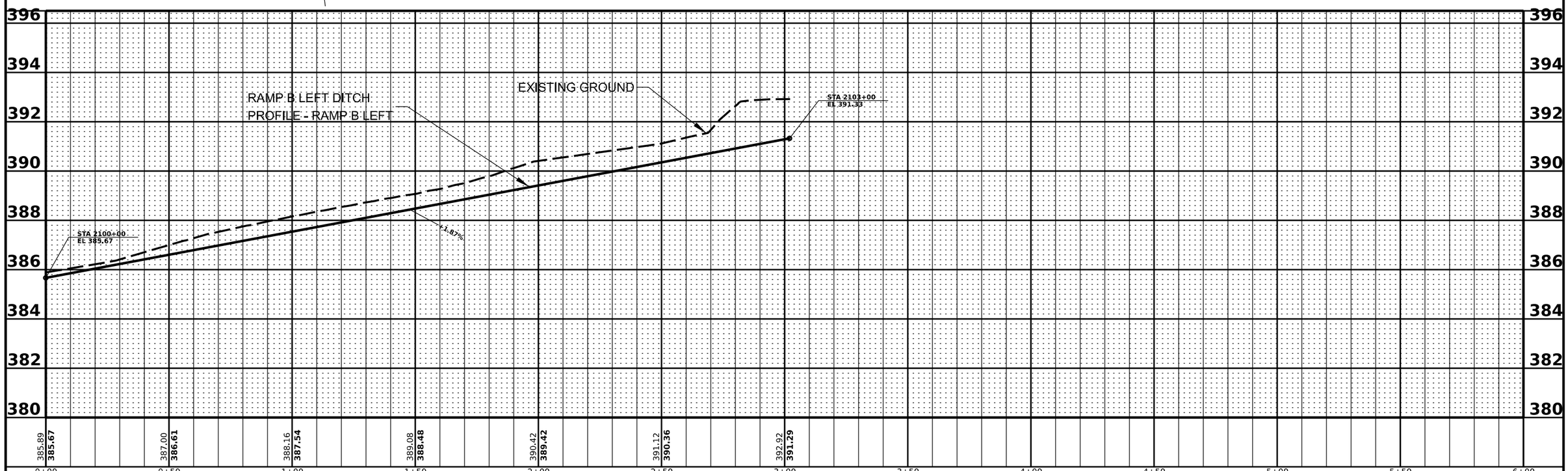

PLAN		BY	DATE
NOTE BOOK NO.	SURVEYED		
	PLOTTED		
	ALIGNMENT CHECKED		
	RT. OF WAY CHECKED		
	CADD FILE NAME		

PROFILE		BY	DATE
NOTE BOOK NO.	SURVEYED		
	PLOTTED		
	GRADES CHECKED		
	B.M. NOTED		
	STRUCTURE NOTAT'NS CH'KD		

MODEL: $MODELNAME$
FILE NAME: $FILE$

USER NAME = $USER$	DESIGNED -	REVISED -	
	DRAWN -	REVISED -	
PLOT SCALE = $SCALE$	CHECKED -	REVISED -	
PLOT DATE = $DATE$	DATE -	REVISED -	

STATE OF ILLINOIS
DEPARTMENT OF TRANSPORTATION

RAMP B DITCH PROFILE

SCALE: SHEET OF SHEETS STA. TO STA.

F.A.P. RTE.	SECTION	COUNTY	TOTAL SHEETS	SHEET NO.
873	(28-5) K-1	FRANKLIN	162	44
		CONTRACT NO. 78814		
		ILLINOIS FED. AID PROJECT		

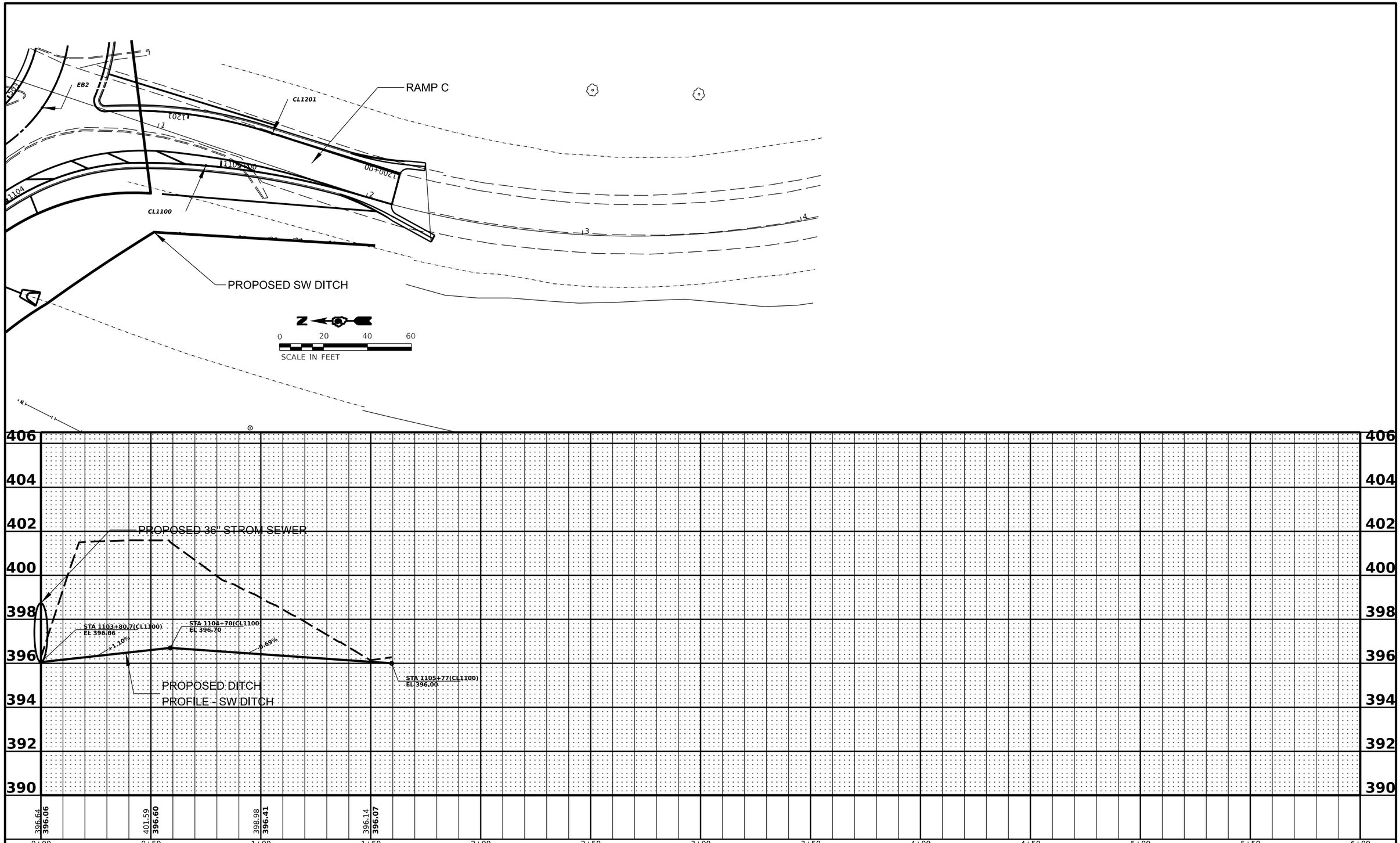

PLAN		BY	DATE
	SURVEYED		
	PLOTTED		
	ALIGNMENT CHECKED		
NOTE BOOK	RT. OF WAY CHECKED		
NO._____	CADD FILE NAME		

PROFILE		BY	DATE
	SURVEYED		
	PLOTTED		
	GRADES CHECKED		
NOTE BOOK	B.M. NOTED		
NO._____	STRUCTURE NOTAT'NS CH'KD		

MODEL: $MODEL$NAME$
FILE NAME: $FILEL$

USER NAME = $USER$	DESIGNED -	REVISED -	
	DRAWN -	REVISED -	
PLOT SCALE = $SCALE$	CHECKED -	REVISED -	
PLOT DATE = $DATE$	DATE -	REVISED -	

STATE OF ILLINOIS
DEPARTMENT OF TRANSPORTATION

DITCH PROFILE RAMP C RIGHT

SCALE: SHEET OF SHEETS STA. TO STA.

F.A.P. RTE.	SECTION	COUNTY	TOTAL SHEETS	SHEET NO.
873	(28-5)K-1	FRANKLIN	162	45
		CONTRACT NO. 78814		
		ILLINOIS	FED. AID PROJECT	

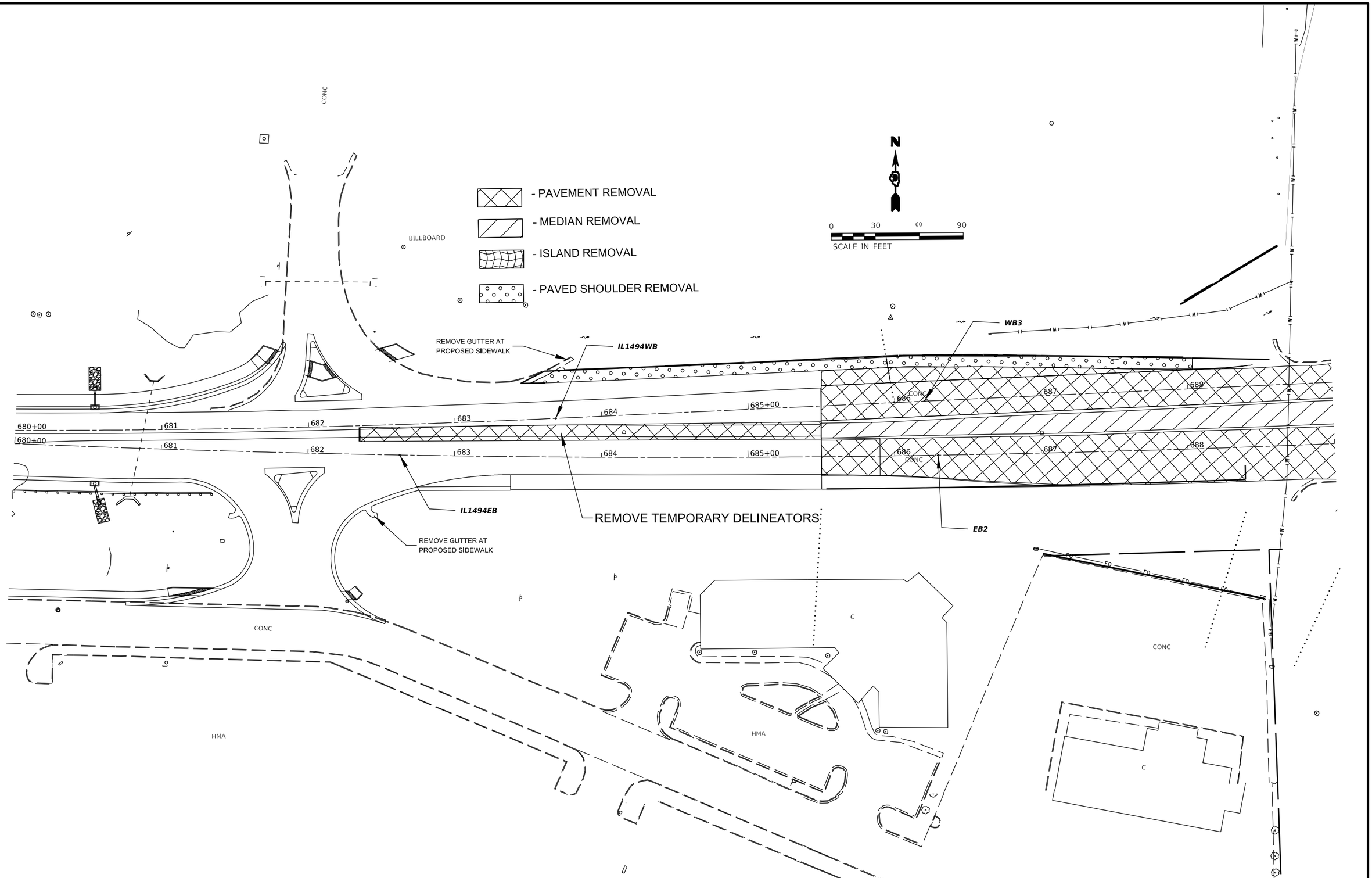

MODEL: $MODELNAME$
FILE NAME: $FILE$

USER NAME = $USER$	DESIGNED -	REVISED -	
	DRAWN -	REVISED -	
PLOT SCALE = $SCALE$	CHECKED -	REVISED -	
PLOT DATE = $DATE$	DATE -	REVISED -	

STATE OF ILLINOIS
DEPARTMENT OF TRANSPORTATION

REMOVAL SHEET

SCALE: | SHEET OF SHEETS | STA. TO STA.

F.A.P. RTE.	SECTION	COUNTY	TOTAL SHEETS	SHEET NO.
873	(28-5) K-1	FRANKLIN	162	46
		CONTRACT NO.78814		
	ILLINOIS	FED. AID PROJECT		

RAMP D

- PAVEMENT REMOVAL
- MEDIAN REMOVAL
- ISLAND REMOVAL
- PAVED SHOULDER REMOVAL

FENCE REMOVAL

COMB. CONCRETE CURB REMOVAL

COMB. CONCRETE CURB REMOVAL

IL 149 WESTBOUND

685+00 686 687 688 689 690+00 691 692 693

IL 149 EASTBOUND

COMB. CONCRETE CURB REMOVAL

COMB. CONCRETE CURB REMOVAL

FENCE REMOVAL

CONC

HMA

RAMP C

N

0 30 60 90

SCALE IN FEET

MODEL: $MODELNAME$
FILE NAME: $FILE$

USER NAME = $USER$	DESIGNED -	REVISED -	STATE OF ILLINOIS DEPARTMENT OF TRANSPORTATION
	DRAWN -	REVISED -	
PLOT SCALE = $SCALE$	CHECKED -	REVISED -	
PLOT DATE = $DATE$	DATE -	REVISED -	

REMOVAL SHEET

SCALE: SHEET OF SHEETS STA. TO STA.

F.A.P. RTE.	SECTION	COUNTY	TOTAL SHEETS	SHEET NO.
873	(28-5) K-1	FRANKLIN	162	47

CONTRACT NO. 78814

ILLINOIS FED. AID PROJECT

- PAVEMENT REMOVAL
- MEDIAN REMOVAL
- ISLAND REMOVAL
- PAVED SHOULDER REMOVAL

RAMP A

ABANDONED 3" PIPE ENCASED IN A 6" PIPE TO BE REMOVED WITHIN CONSTRUCTION LIMITS. TO BE INCLUDED IN THE COST OF EARTH EXCAVATION.

COMB. CURB & GUTTER REMOVAL

GUARDRAIL REMOVAL

IL 149 WESTBOUND

COMB. CURB & GUTTER REMOVAL

IL 149 EASTBOUND

COMB. CURB & GUTTER REMOVAL

FENCE REMOVAL

COMB. CURB & GUTTER REMOVAL

PIPE CULVERT REMOVAL, 50'

SAW CUT EXISTING PARKING LOT AT ROW. TO BE INCLUDED IN THE COST OF PAVEMENT REMOVAL.

RAMP B

N

0 30 60 90

SCALE IN FEET

MODEL: $MODELNAME$
FILE NAME: $FILE$

USER NAME = $USER$	DESIGNED -	REVISED -	
	DRAWN -	REVISED -	
PLOT SCALE = $SCALE$	CHECKED -	REVISED -	
PLOT DATE = $DATE$	DATE -	REVISED -	

STATE OF ILLINOIS
DEPARTMENT OF TRANSPORTATION

REMOVAL SHEET

SCALE: | SHEET OF SHEETS | STA. TO STA.

F.A.P. RTE.	SECTION	COUNTY	TOTAL SHEETS	SHEET NO.
873	(28-5) K-1	FRANKLIN	162	48
		CONTRACT NO. 78814		
	ILLINOIS	FED. AID PROJECT		

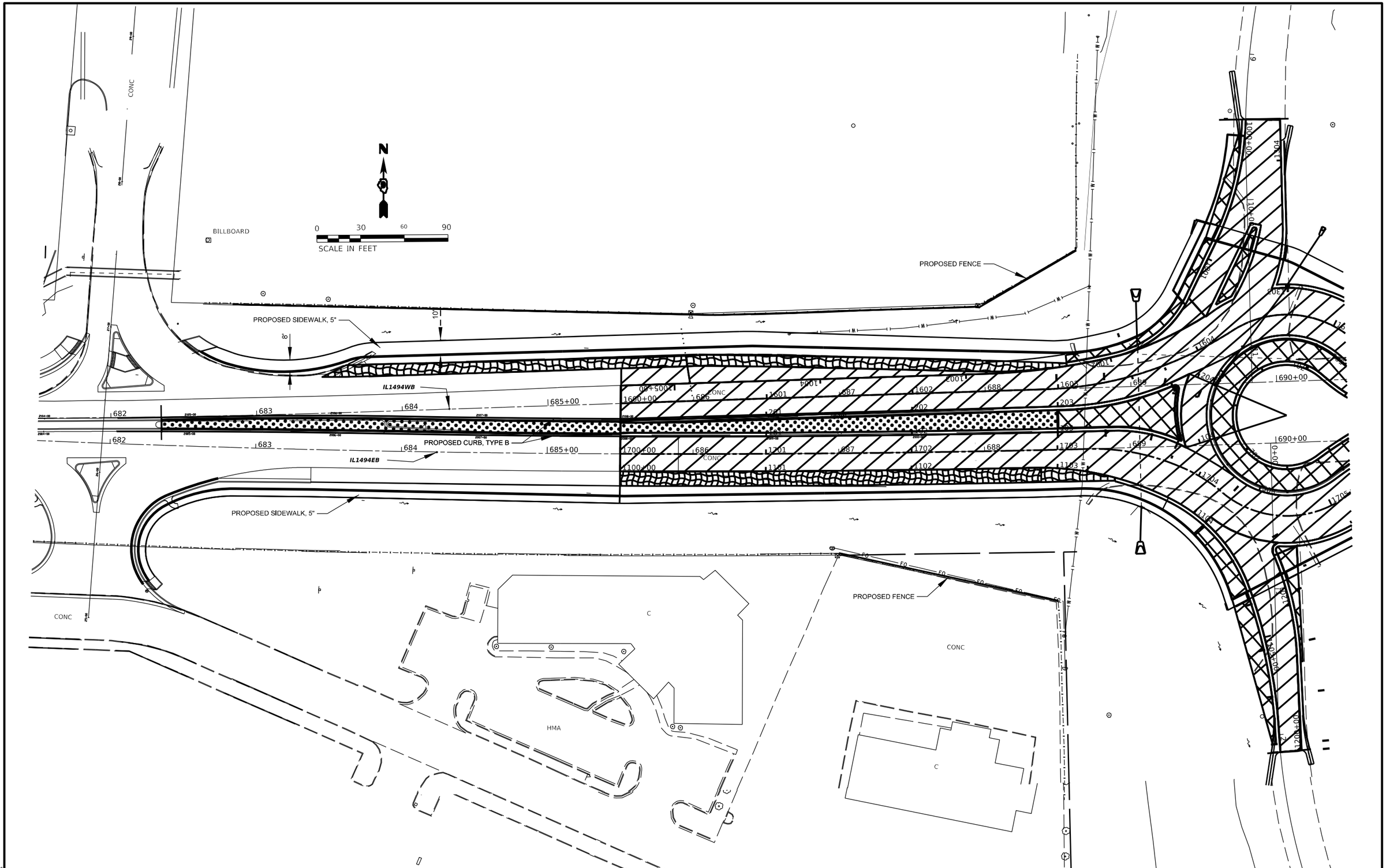

USER NAME = $USER$	DESIGNED -	REVISED -	
	DRAWN -	REVISED -	
PLOT SCALE = $SCALE$	CHECKED -	REVISED -	
PLOT DATE = $DATE$	DATE -	REVISED -	

STATE OF ILLINOIS
DEPARTMENT OF TRANSPORTATION

CONSTRUCTION SHEET

SCALE: | SHEET OF SHEETS | STA. TO STA.

F.A.P. RTE.	SECTION	COUNTY	TOTAL SHEETS	SHEET NO.
873	(28-5) K-1	FRANKLIN	162	49

CONTRACT NO. 78814

ILLINOIS | FED. AID PROJECT

MODEL: $MODELNAME$
FILE NAME: $FILE$

OUTLET FOR CURB AND GUTTER

CL1000

PCC PAVEMENT 9"

CL1300

LANDSCAPE GRAVEL

PCC SIDEWALK 5"

CL500

WB3

PCC SIDEWALK 5"

CL200

CL100

CL700

EB2

PCC SIDEWALK 5"

CL1100

PCC SIDEWALK 5"

CL1200

PCC PAVEMENT 9"

IN AREAS WHERE PCC SIDEWALK
IS LOCATED IN THE OSOW PAVEMENT
SIDEWALK WILL BE
PCC PAVEMENT 9"
STABILIZED SUB-BASE 4"
SUB-BASE GRAN. MAT. 12"

OUTLET FOR CURB AND GUTTER

RIPRAP

FAI 57

PCC PAVEMENT, 9" (JOINTED)
- STABILIZED SUB-BASE 4"
SUB-BASE GRANULAR MATERIAL TYPE A, 12"

STAMPED COLORED PCC PAVEMENT, 9" (JOINTED)
- STABILIZED SUB-BASE 4"
SUB-BASE GRANULAR MATERIAL TYPE A, 12"

PCC SHOULDERS, 9"
- STABILIZED SUB-BASE 4"
SUB-BASE GRANULAR MATERIAL TYPE A, 12"
AGGREGATE WEDGE, TYPE B

- STAMPED & COLORED PCC MEDIAN SURFACE 4"

N

0 30 60 90
SCALE IN FEET

MODEL: $MODELNAME$
FILE NAME: $FILEL$

USER NAME = $USER$	DESIGNED -	REVISED -	
	DRAWN -	REVISED -	
PLOT SCALE = $SCALE$	CHECKED -	REVISED -	
PLOT DATE = $DATE$	DATE -	REVISED -	

STATE OF ILLINOIS
DEPARTMENT OF TRANSPORTATION

CONSTRUCTION SHEET

SCALE: | SHEET OF SHEETS | STA. TO STA.

F.A.P. RTE.	SECTION	COUNTY	TOTAL SHEETS	SHEET NO.
873	(28-5)K-1	FRANKLIN	162	50

CONTRACT NO. 78814

ILLINOIS | FED. AID PROJECT

IN AREAS WHERE PCC SIDEWALK
IS LOCATED IN THE OSOW PAVEMENT
SIDEWALK WILL BE
PCC PAVEMENT 9"
STABILIZED SUB-BASE 4"
SUB-BASE GRAN. MAT. 12"

CL2000
PCC PAVEMENT 9"
CL500
LANDSCAPE GRAVEL
PCC SIDEWALK 5"
GUARDRAIL
CL800
CL2300
CL WB3
CL400
CL300
CL EB2
CL2200
CL2100
PCC SIDEWALK 5"
PCC PAVEMENT, 9"
PCC PAVEMENT 9"
OUTLET FOR CURB AND GUTTER
PROPOSED FENCE
PROPOSED FENCE
PROPOSED FENCE
SOPHIA ST
SOPHIA ST
OAK ST
ILL 149
ILL 149
FAI 57
ROCK
CONC
HMA
O&C

PCC PAVEMENT, 9" (JOINTED)
- STABILIZED SUB-BASE 4"
SUB-BASE GRANULAR MATERIAL TYPE A, 12"

STAMPED COLORED PCC PAVEMENT, 9" (JOINTED)
- STABILIZED SUB-BASE 4"
SUB-BASE GRANULAR MATERIAL TYPE A, 12"

PCC SHOULDERS, 9"
- STABILIZED SUB-BASE 4"
SUB-BASE GRANULAR MATERIAL TYPE A, 12"
AGGREGATE WEDGE, TYPE B

- STAMPED & COLORED PCC MEDIAN SURFACE 4"

N

0 30 60 90
SCALE IN FEET

MODEL: $MODELNAME$
FILE NAME: $FILE$

USER NAME = $USER$	DESIGNED -	REVISED -	
	DRAWN -	REVISED -	
PLOT SCALE = $SCALE$	CHECKED -	REVISED -	
PLOT DATE = $DATE$	DATE -	REVISED -	

STATE OF ILLINOIS
DEPARTMENT OF TRANSPORTATION

CONSTRUCTION SHEET

SCALE: SHEET OF SHEETS STA. TO STA.

F.A.P. RTE.	SECTION	COUNTY	TOTAL SHEETS	SHEET NO.
873	(28-5)K-1	FRANKLIN	162	51

CONTRACT NO. 78814

ILLINOIS FED. AID PROJECT

STAGE 1

SHIFT TRAFFIC AS SHOWN. EXISTING OUTER SIGNALS TO BE MAINTAINED FOR USE.

REMOVE MEDIAN AND ISLANDS AS SHOWN

CONSTRUCT THE TEMP. PAVEMENT, PCC PAVEMENT, AND CURB & GUTTER

SIGN IL 149 ACCORDING TO STANDARD 701602, REPLACE W20-5L(0)-48 WITH W1-4R

INSTALL PROTECTIVE SHIELD UNDER IL 149 STRUCTURE. SEE STRUCTURES PLAN SHEETS

8 - 24 HOUR WORK DAYS HAVE BEEN ALLOTTED FOR THIS WORK.

0 30 60 90
SCALE IN FEET

N

-PROP. PCC PAVEMENT

- PROP. MEDIAN & ISLAND REMOVAL, CONSTRUCT TEMPORARY PAVEMENT

-REMOVE DELINEATORS AND PATCH TEMPORARY PAVEMENT

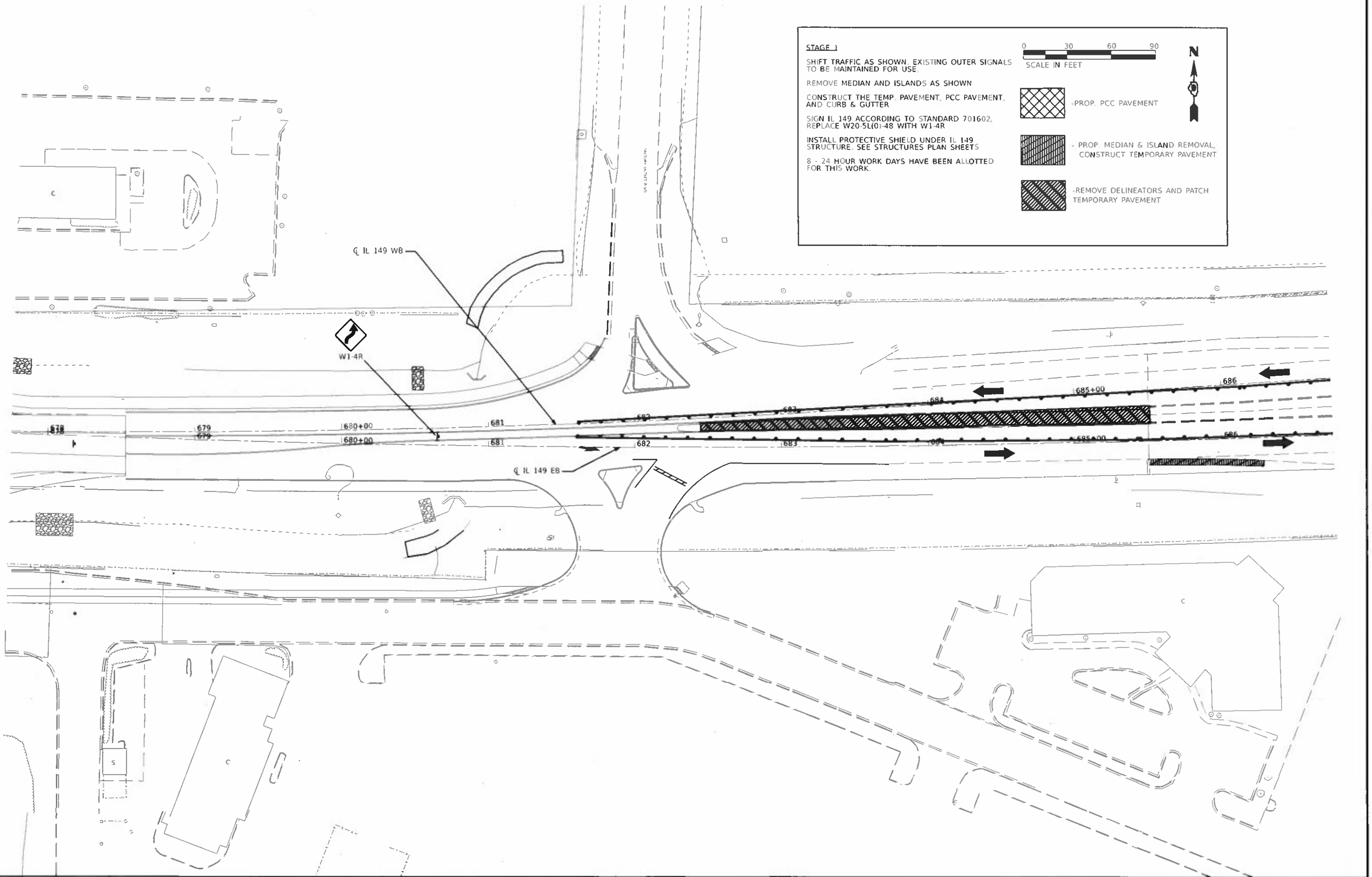

USER NAME = Sean.Greenlee	DESIGNED -	REVISED -	
	DRAWN -	REVISED -	
PLOT SCALE = 0.16666633 ' / in	CHECKED -	REVISED -	
PLOT DATE = 5/15/2023	DATE -	REVISED -	

STATE OF ILLINOIS
DEPARTMENT OF TRANSPORTATION

STAGE 1

SCALE: SHEET OF SHEETS STA. TO STA.

F.A.P. RTE.	SECTION	COUNTY	TOTAL SHEETS	SHEET NO.
873	(28-5)K-1	FRANKLIN	162	52
		CONTRACT NO. 78814		
	ILLINOIS	FED. AID PROJECT		

MODEL: Stage1_1 - Stage1_1 [Sheet]
FILE NAME: pw://idot.pw.bentley.com:PWIDOT/Documents/D01 D. ceDistrict 9/Projects/78814/Roll-Ahead/Sheets, DGN/ROH/D9781 4-Stage1-Sheets

STAGE 1

REMOVE MEDIAN AND ISLANDS AS SHOWN

CONSTRUCT THE TEMP. PAVEMENT, PCC PAVEMENT, CURB & GUTTER, AND MEDIAN

INSTALL PROTECTIVE SHIELD UNDER IL 149 STRUCTURE, SEE STRUCTURES PLAN SHEETS

SIGN IL 149 ACCORDING TO STANDARD 701602

8 - 24 HOUR WORK DAYS HAVE BEEN ALLOTTED FOR THIS WORK.

0 30 60 90
SCALE IN FEET

N

-PROP. PCC PAVEMENT

- PROP. MEDIAN & ISLAND REMOVAL, CONSTRUCT TEMPORARY PAVEMENT

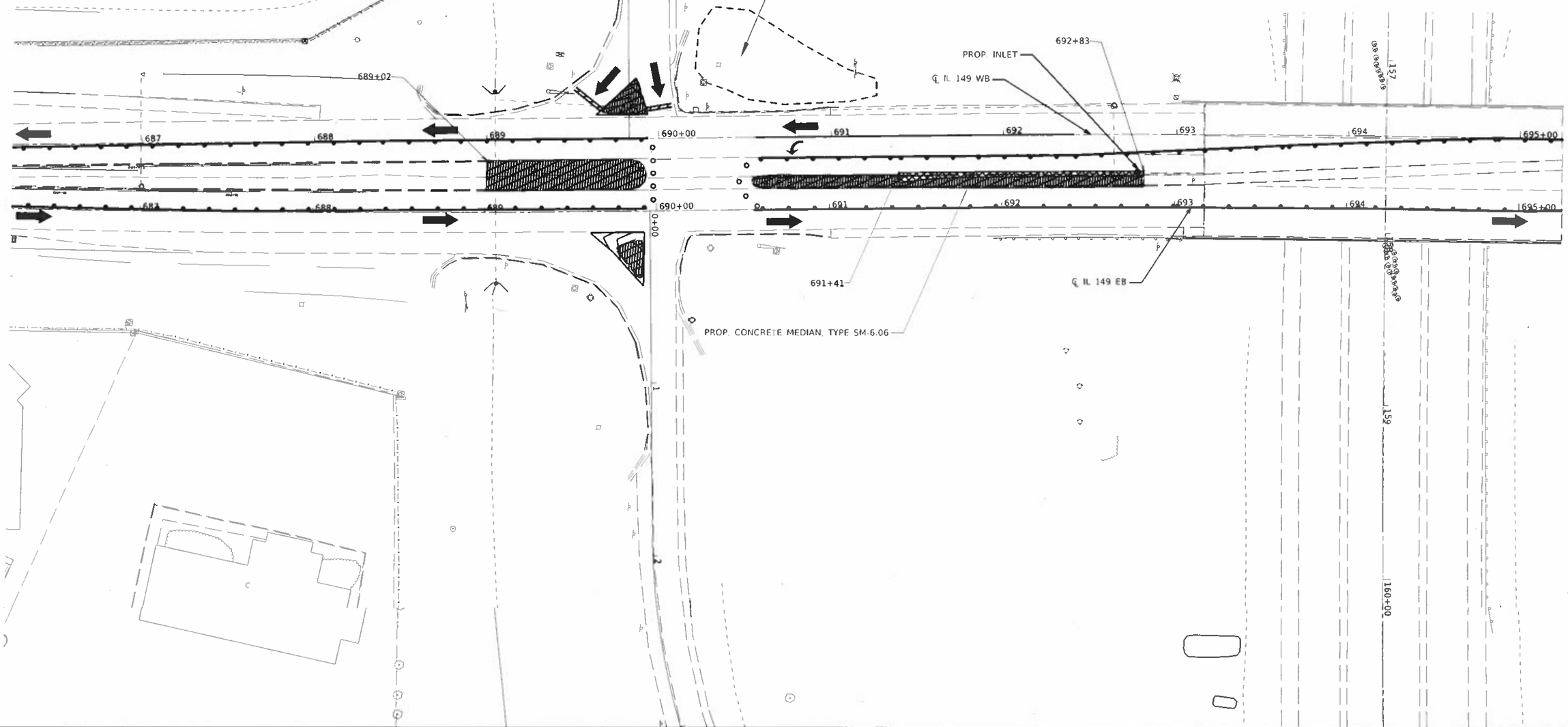

USER NAME = Sean Greenlee	DESIGNED -	REVISED -	
	DRAWN -	REVISED -	
PLOT SCALE = 0.16666633 ' / in	CHECKED -	REVISED -	
PLOT DATE = 5/15/2023	DATE -	REVISED -	

STATE OF ILLINOIS
DEPARTMENT OF TRANSPORTATION

STAGE 1

SCALE: SHEET OF SHEETS STA. TO STA.

F.A.P. RTE.	SECTION	COUNTY	TOTAL SHEETS	SHEET NO.
873	(28-5)K-1	FRANKLIN	162	53

CONTRACT NO. 78814

ILLINOIS FED. AID PROJECT

MODEL: Stage1_1 - Stage1_2 (Sheet)
FILE NAME: pw://ildot-pw.bentley.com:PWIDOT:/Documents/100 - Greenfield/Ohio Creek/Design/78814/Ohio Creek CADD data/Cad Sheets/Ohio Creek 78814 Stage1 Sheets

STAGE 1

REMOVE MEDIAN AND ISLANDS AS SHOWN

CONSTRUCT THE TEMP. PAVEMENT, PCC PAVEMENT, AND CURB & GUTTER

INSTALL PROTECTIVE SHIELD UNDER IL 149 STRUCTURE. SEE STRUCTURES PLAN SHEETS

SIGN IL 149, EAST OF I-57, ACCORDING TO STANDARD 701502

8 - 24 HOUR WORK DAYS HAVE BEEN ALLOTTED FOR THIS WORK.

0 30 60 90
SCALE IN FEET

N

- PROP. PCC PAVEMENT
- PROP. MEDIAN & ISLAND REMOVAL, CONSTRUCT TEMPORARY PAVEMENT
- PROP. PCC PAVEMENT COLORED AND STAMPED

APPROX. LIMITS FOR EARTH EXCAVATION FROM STAGE 2 TO BALANCE BORROW EXCAVATION FOR SE RAMP CONSTRUCTED IN STAGE 1.

PROP. CONCRETE MEDIAN, TYPE SM-6.06

695+60

699+35

℄ IL 149 WB

695+00 696 697 698 699 700+00 701 702 703

10+00

PROP. INLET

696+48

℄ IL 149 EB

697+63

9+00

CANOPY

C

S

R

STAGE 2

TRAFFIC CONTROL WILL BE PAID FOR AS TRAFFIC CONTROL AND PROTECTION SPECIAL.

SIGN IL 149 ACCORDING TO STANDARD 701602, REPLACE W20-5L(0)-48 WITH W1-4R

35 - 8 HOUR WORK DAYS HAVE BEEN ALLOTTED FOR THIS WORK.

0 30 60 90
SCALE IN FEET

N

-PROP. PCC PAVEMENT

-PROP. PCC SHOULDER

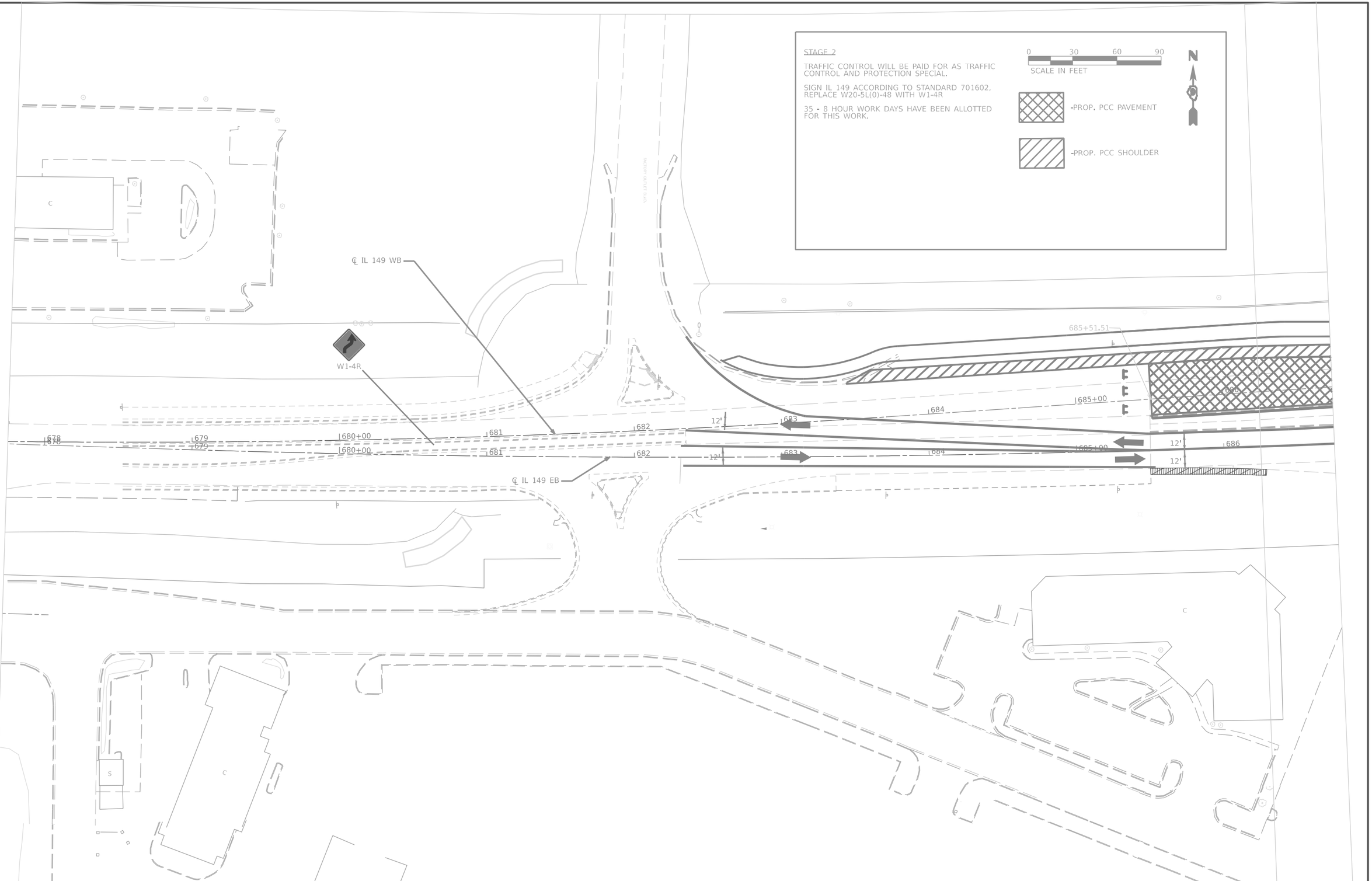

USER NAME = $USER$	DESIGNED -	REVISED -	STATE OF ILLINOIS DEPARTMENT OF TRANSPORTATION	STAGE 2			F.A.P. RTE.	SECTION	COUNTY	TOTAL SHEETS	SHEET NO.
	DRAWN -	REVISED -					873	(28-5)K-1	FRANKLIN	162	55
PLOT SCALE = $SCALE$	CHECKED -	REVISED -							CONTRACT NO. 78814		
PLOT DATE = $DATE$	DATE -	REVISED -		SCALE:	SHEET OF SHEETS	STA. TO STA.		ILLINOIS	FED. AID PROJECT		

MODEL: $MODELNAME$
FILE NAME: $FILE$

STAGE 2

TRAFFIC CONTROL WILL BE PAID FOR AS TRAFFIC CONTROL AND PROTECTION SPECIAL.

SIGN IL 149 ACCORDING TO STANDARD 701602, REPLACE W20-5L(0)-48 WITH W1-4R

35 - 8 HOUR WORK DAYS HAVE BEEN ALLOTTED FOR THIS WORK.

30 60 90
SCALE IN FEET

N

-PROP. PCC PAVEMENT

-PROP. PCC SHOULDER

-PROP. TEMP. PAVEMENT

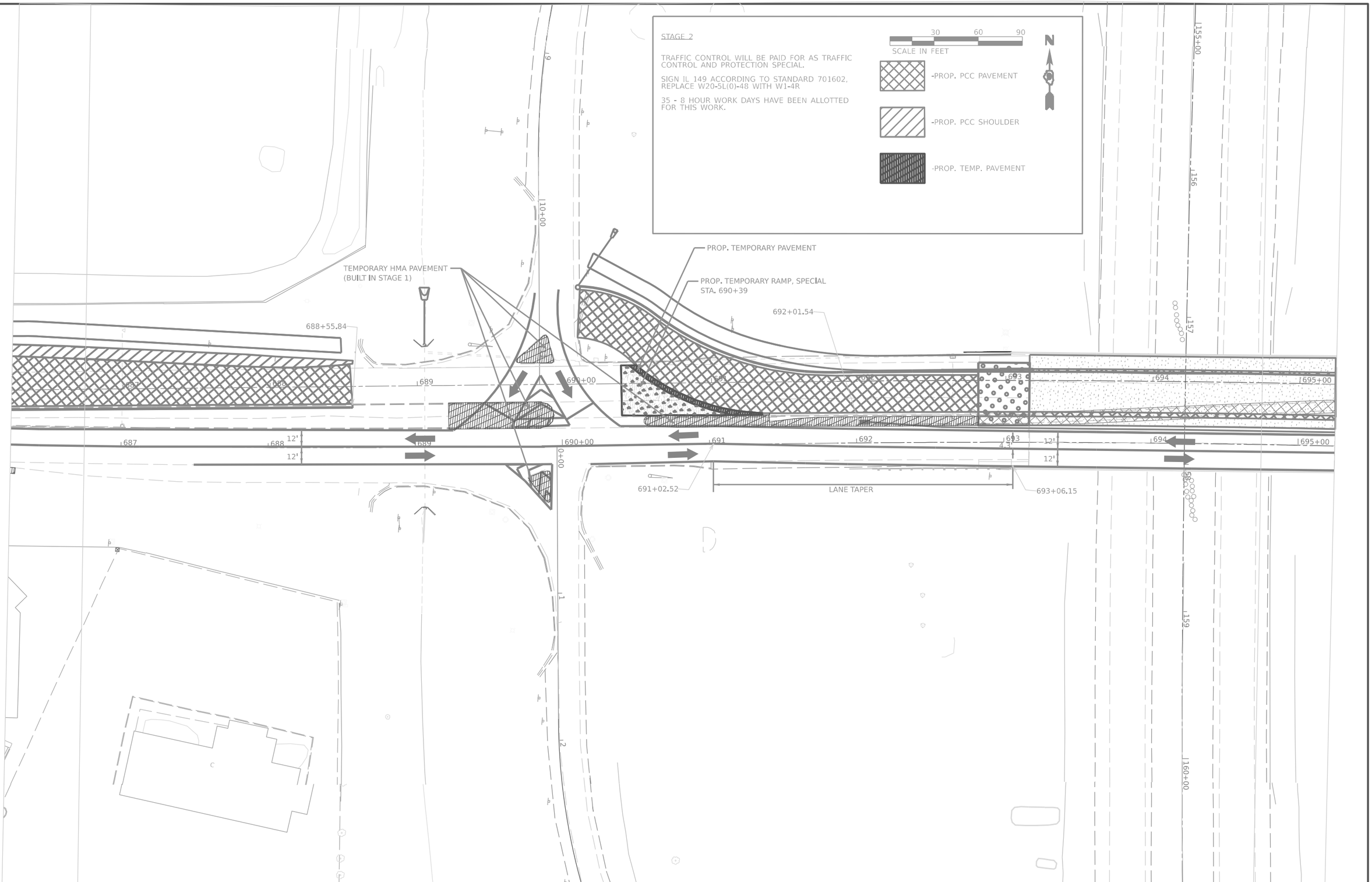

USER NAME = $USER$	DESIGNED -	REVISED -	
	DRAWN -	REVISED -	
PLOT SCALE = $SCALE$	CHECKED -	REVISED -	
PLOT DATE = $DATE$	DATE -	REVISED -	

STATE OF ILLINOIS
DEPARTMENT OF TRANSPORTATION

STAGE 2

SCALE: SHEET OF SHEETS STA. TO STA.

F.A.P. RTE.	SECTION	COUNTY	TOTAL SHEETS	SHEET NO.
873	(28-5)K-1	FRANKLIN	162	56
		CONTRACT NO. 78814		
		ILLINOIS FED. AID PROJECT		

MODEL: $MODELNAME$
FILE NAME: $FILE$

STAGE 2

TRAFFIC CONTROL WILL BE PAID FOR AS TRAFFIC CONTROL AND PROTECTION SPECIAL.

SIGN IL 149 ACCORDING TO STANDARD 701602, REPLACE W20-5L(0)-48 WITH W1-4R

35 - 8 HOUR WORK DAYS HAVE BEEN ALLOTTED FOR THIS WORK.

30 60 90
SCALE IN FEET

N

-PROP. PCC PAVEMENT

-PROP. PCC SHOULDER

-PROP. TEMP. PAVEMENT

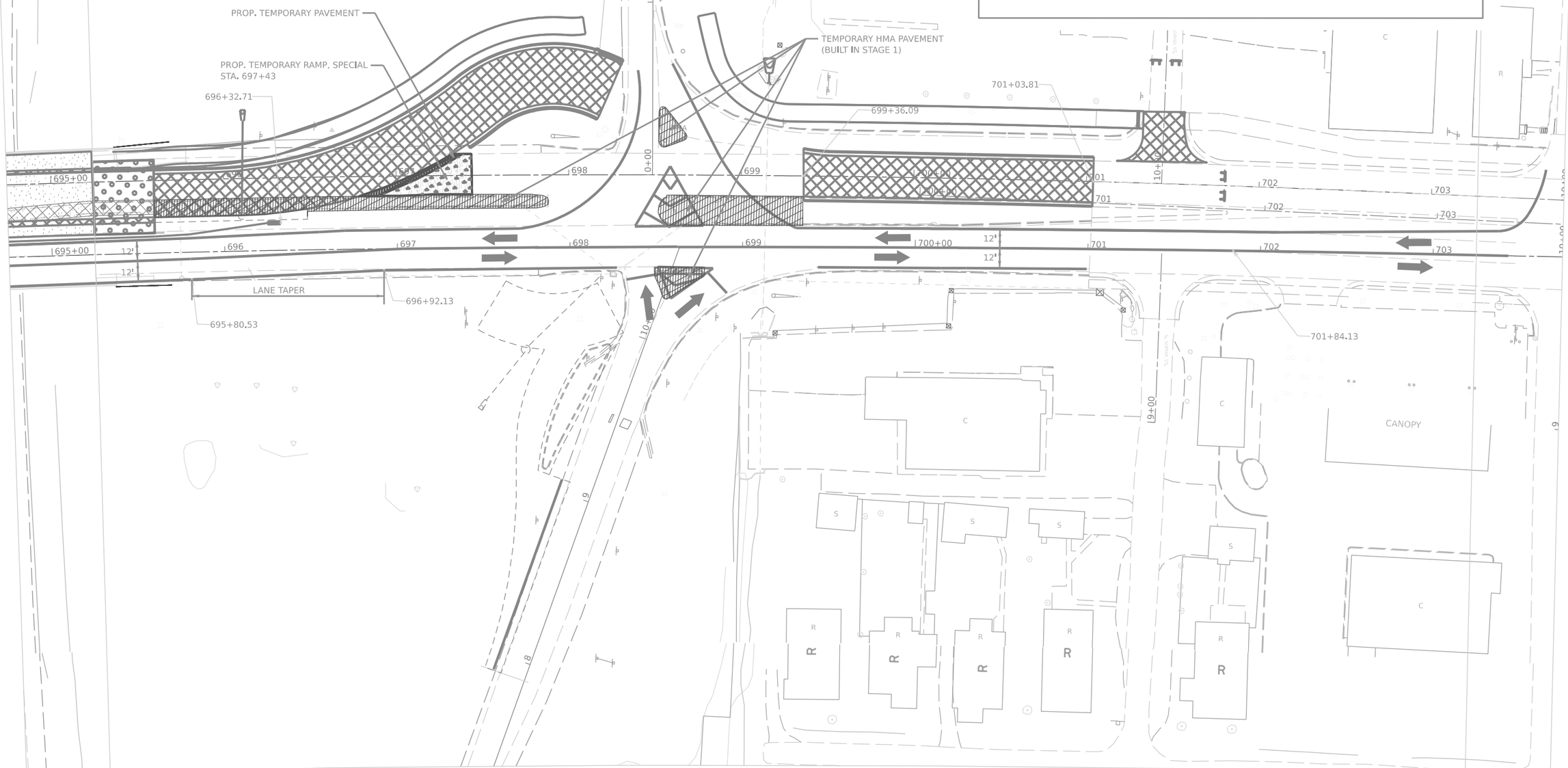

USER NAME = $USER$	DESIGNED -	REVISED -	
	DRAWN -	REVISED -	
PLOT SCALE = $SCALE$	CHECKED -	REVISED -	
PLOT DATE = $DATE$	DATE -	REVISED -	

STATE OF ILLINOIS
DEPARTMENT OF TRANSPORTATION

STAGE 2

SCALE: | SHEET OF SHEETS | STA. TO STA.

F.A.P. RTE.	SECTION	COUNTY	TOTAL SHEETS	SHEET NO.
873	(28-5)K-1	FRANKLIN	162	57
		CONTRACT NO. 78814		
	ILLINOIS	FED. AID PROJECT		

MODEL: $MODELNAME$
FILE NAME: $FILE$

STAGE 2

TRAFFIC CONTROL WILL BE PAID FOR AS TRAFFIC CONTROL AND PROTECTION SPECIAL.

SIGN IL 149 ACCORDING TO STANDARD 701502.

35 - 8 HOUR WORK DAYS HAVE BEEN ALLOTTED FOR THIS WORK.

30 60 90
SCALE IN FEET

N

-PROP. PCC PAVEMENT

-PROP. PCC SHOULDER

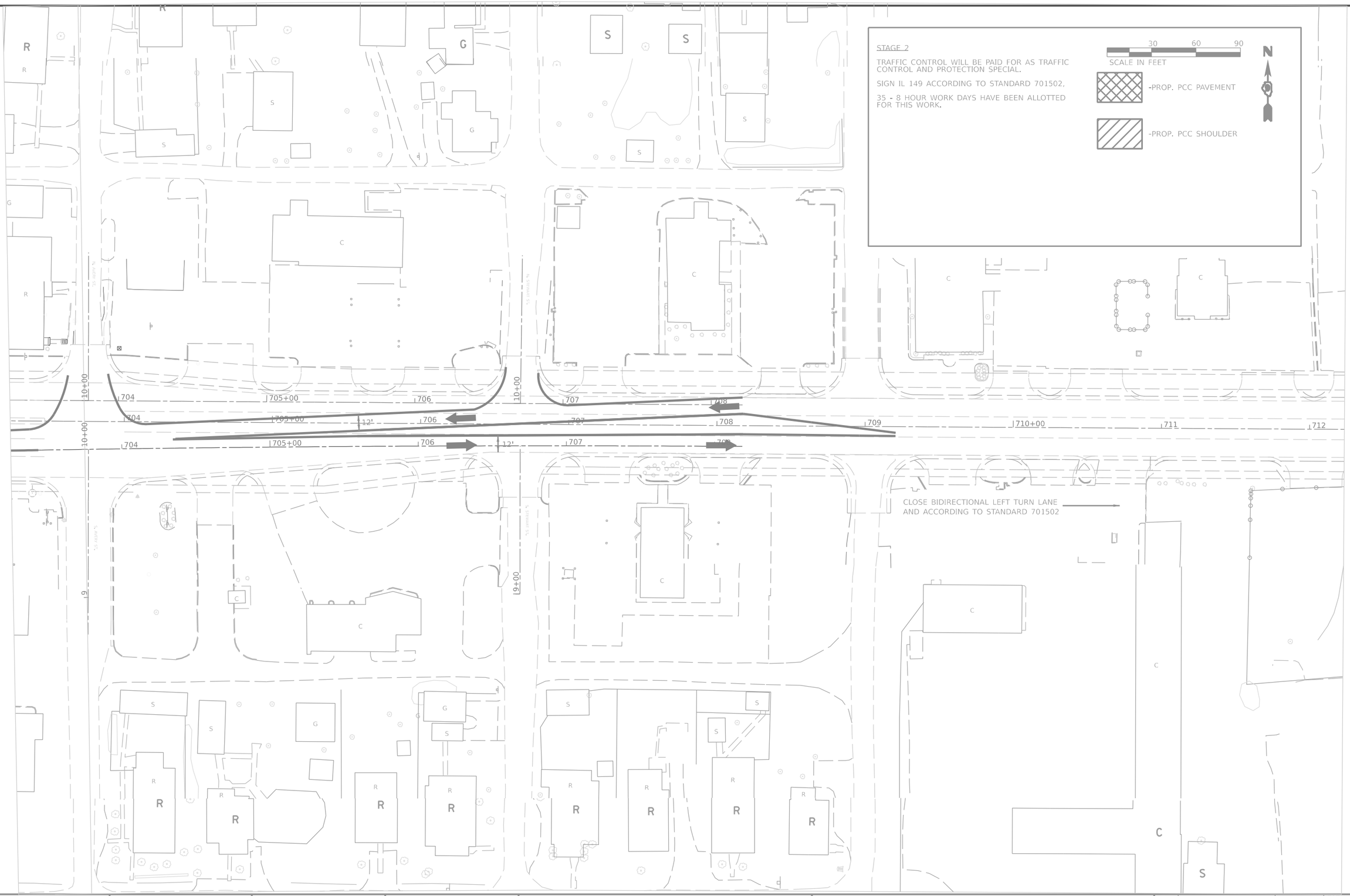

MODEL: $MODELNAME$
FILE NAME: $FILE$

USER NAME = $USER$	DESIGNED -	REVISED -	STATE OF ILLINOIS DEPARTMENT OF TRANSPORTATION
	DRAWN -	REVISED -	
PLOT SCALE = $SCALE$	CHECKED -	REVISED -	
PLOT DATE = $DATE$	DATE -	REVISED -	

STAGE 2

SCALE: SHEET OF SHEETS STA. TO STA.

F.A.P. RTE.	SECTION	COUNTY	TOTAL SHEETS	SHEET NO.
873	(28-5)K-1	FRANKLIN	162	58
		CONTRACT NO. 78814		
		ILLINOIS FED. AID PROJECT		

STAGE 3

TRAFFIC CONTROL WILL BE PAID FOR AS TRAFFIC CONTROL AND PROTECTION SPECIAL.

SIGN IL 149 ACCORDING TO STANDARD 701602. REPLACE W20-5L(0)-48 WITH W1-4R

REFER TO STAGE 2 SHEETS FOR TRAFFIC CONTROL LAYOUT

CLOSE THE I-57 NB ON RAMP ACCORDING TO STANDARD 701451

5 - 24 HOUR WORK DAYS HAVE BEEN ALLOTTED FOR THIS WORK.

30 60 90
SCALE IN FEET

N

-PROP. PCC PAVEMENT

-PROP. PCC PAVEMENT STAMPED COLORED

PROP. TEMPORARY PAVEMENT

695+00 696 697 698 699 700+00 701 702 703

12' 12' 12' 12'

10+00

19+00

CANOPY

USER NAME = Sean.Greenlee	DESIGNED -	REVISED -	STATE OF ILLINOIS DEPARTMENT OF TRANSPORTATION	STAGE 3	F.A.P. RTE	SECTION	COUNTY	TOTAL SHEETS	SHEET NO	
	DRAWN -	REVISED -			873	(28-5)K-1	FRANKLIN	162	59	
PLOT SCALE = 0.16666633 ' / in	CHECKED -	REVISED -					CONTRACT NO. 78814			
PLOT DATE = 3/15/2023	DATE -	REVISED -		SCALE SHEET OF SHEETS STA. TO STA.			ILLINOIS FED. AID PROJECT			

STAGE 4

TRAFFIC CONTROL WILL BE PAID FOR AS TRAFFIC CONTROL AND PROTECTION SPECIAL

SIGN IL 149 ACCORDING TO STANDARD 701602. REPLACE W20-5L(0)-48 WITH W1-4R

REFER TO STAGE 2 SHEETS FOR TRAFFIC CONTROL LAYOUT

CLOSE THE I-57 SB OFF RAMP ACCORDING TO STANDARD 701451

5 - 24 HOUR WORK DAYS HAVE BEEN ALLOTTED FOR THIS WORK

30 60 90
SCALE IN FEET

N

PROP. PCC PAVEMENT

PROP. PCC PAVEMENT STAMPED COLORED

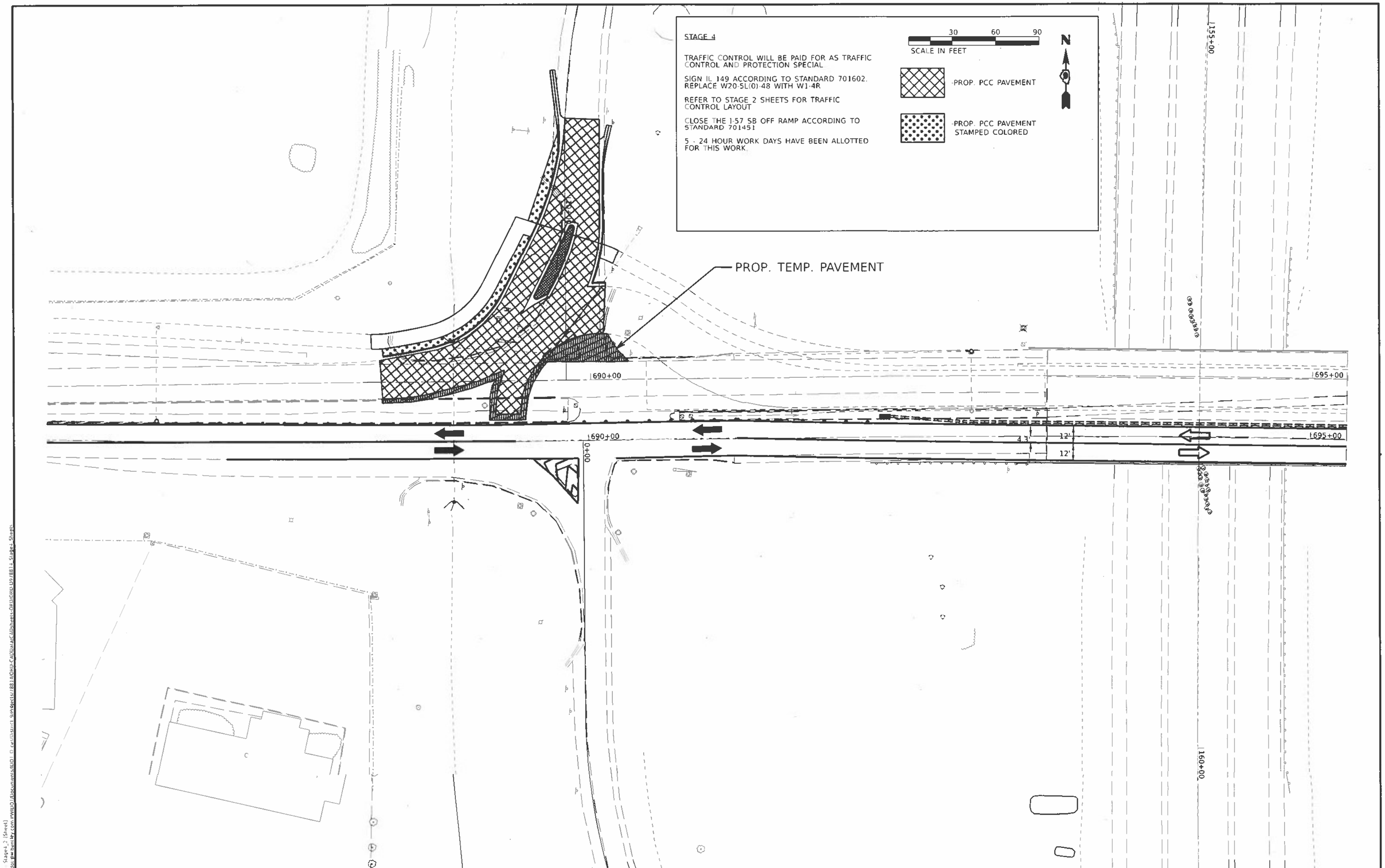

USER NAME = Sean Greenlee	DESIGNED -	REVISED -	STATE OF ILLINOIS DEPARTMENT OF TRANSPORTATION
	DRAWN -	REVISED -	
PLOT SCALE = 0.16666633 ' / in	CHECKED -	REVISED -	
PLOT DATE = 5/15/2023	DATE -	REVISED -	

STAGE 4

SCALE: | SHEET OF SHEETS | STA. TO STA.

F.A.P. RTE.	SECTION	COUNTY	TOTAL SHEETS	SHEET NO.
873	(28-5)K-1	FRANKLIN	162	60
		CONTRACT NO. 78814		
		ILLINOIS FED. AID PROJECT		

MODEL: IL149-LU - Stage4_2 [Sheet]
FILE NAME: pw:\\dot-pw.bentley.com:PWIDOT\dot\documents\DOT1.D.cw\District 8\78814\CHU1-Cad\Data\CADsheets-CHU\CHU09\78814-Stage4_Sheets.

STAGE 5

TRAFFIC CONTROL WILL BE PAID FOR AS TRAFFIC CONTROL AND PROTECTION SPECIAL.

SIGN IL 149 ACCORDING TO STANDARD 701602, REPLACE W20-5L(0)-48 WITH W1-4R

37 - 8 HOUR WORK DAYS HAVE BEEN ALLOTTED FOR THIS WORK.

0 30 60 90
SCALE IN FEET

N

-PROP. PCC PAVEMENT

-PROP. PCC SHOULDER

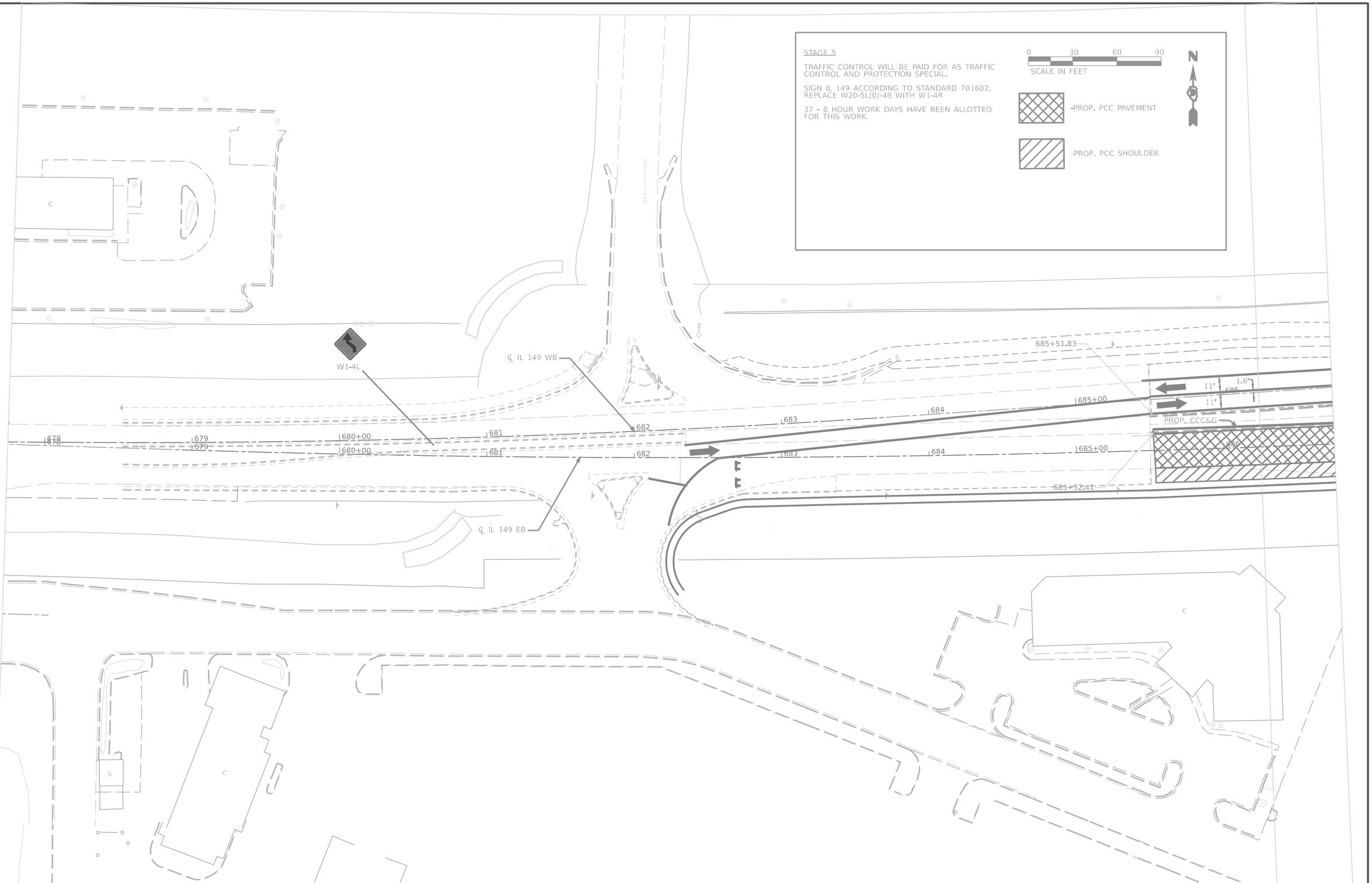

MODEL: $MODELNAME$
FILE NAME: $FILE$

USER NAME = $USER$	DESIGNED -	REVISED -	STATE OF ILLINOIS DEPARTMENT OF TRANSPORTATION	STAGE 5	F.A.P. RTE.	SECTION	COUNTY	TOTAL SHEETS	SHEET NO.
	DRAWN -	REVISED -			873	(28-5)K-1	FRANKLIN	162	61
PLOT SCALE = $SCALE$	CHECKED -	REVISED -					CONTRACT NO. 78814		
PLOT DATE = $DATE$	DATE -	REVISED -		SCALE: SHEET OF SHEETS STA. TO STA.		ILLINOIS	FED. AID PROJECT		

STAGE 5

TRAFFIC CONTROL WILL BE PAID FOR AS TRAFFIC CONTROL AND PROTECTION SPECIAL.

37 -8 HOUR WORK DAYS HAVE BEEN ALLOTTED FOR THIS WORK.

30 60 90
SCALE IN FEET

-PROP. PCC PAVEMENT

-PROP. PCC SHOULDER

N

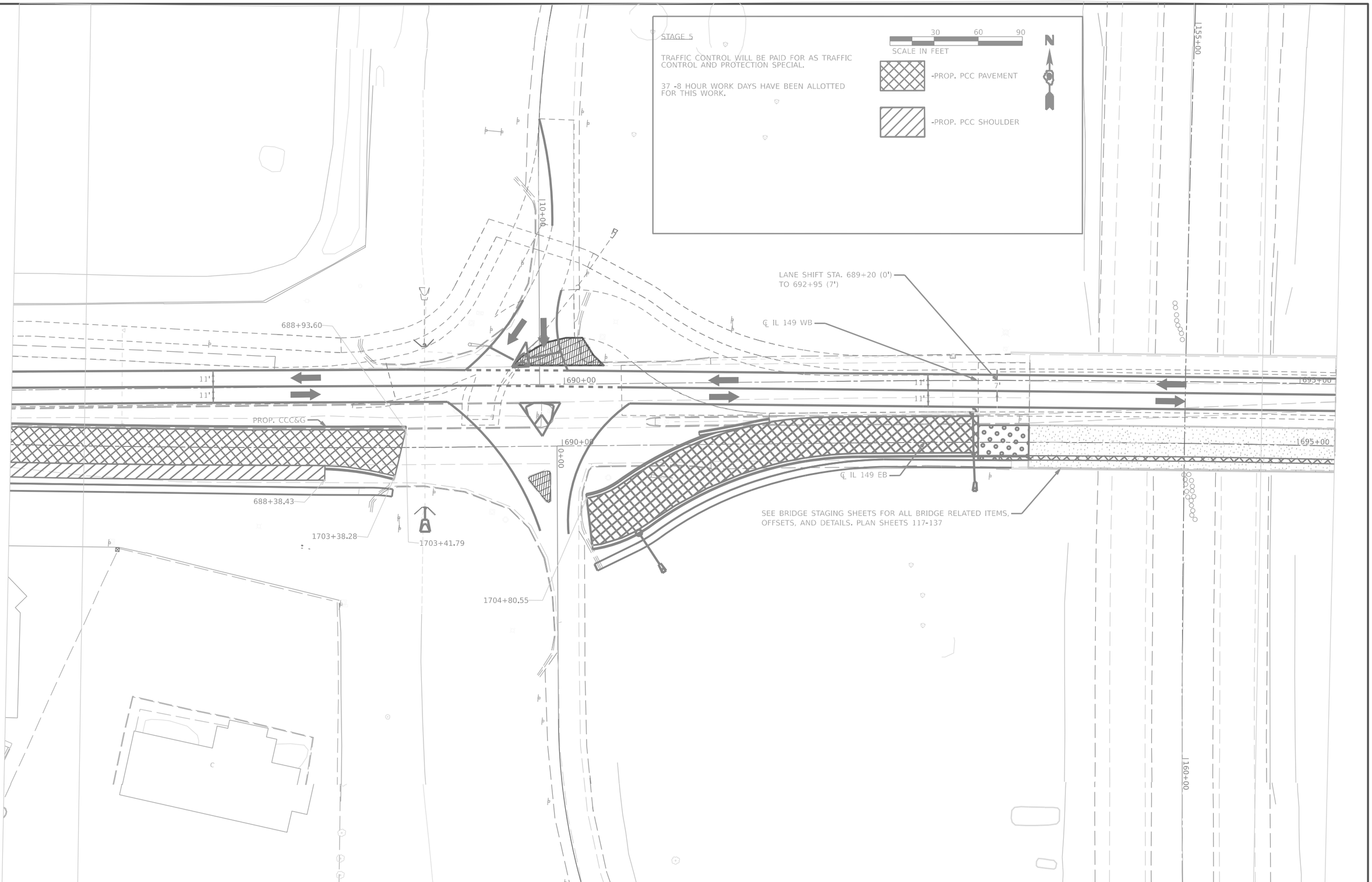

MODEL: SMODELNAME$
FILE NAME: $FILE$

USER NAME = $USER$	DESIGNED -	REVISED -	
	DRAWN -	REVISED -	
PLOT SCALE = $SCALE$	CHECKED -	REVISED -	
PLOT DATE = $DATE$	DATE -	REVISED -	

STATE OF ILLINOIS
DEPARTMENT OF TRANSPORTATION

STAGE 5

SCALE: SHEET OF SHEETS STA. TO STA.

F.A.P. RTE.	SECTION	COUNTY	TOTAL SHEETS	SHEET NO.
873	(28-5)K-1	FRANKLIN	162	62

CONTRACT NO. 78814

ILLINOIS FED. AID PROJECT

STAGE 5

TRAFFIC CONTROL WILL BE PAID FOR AS TRAFFIC CONTROL AND PROTECTION SPECIAL.

SIGN IL 149 ACCORDING TO STANDARD 701602.

37 - 8 HOUR WORK DAYS HAVE BEEN ALLOTTED FOR THIS WORK.

30 60 90
SCALE IN FEET

N

-PROP. PCC PAVEMENT

-PROP. PCC SHOULDER

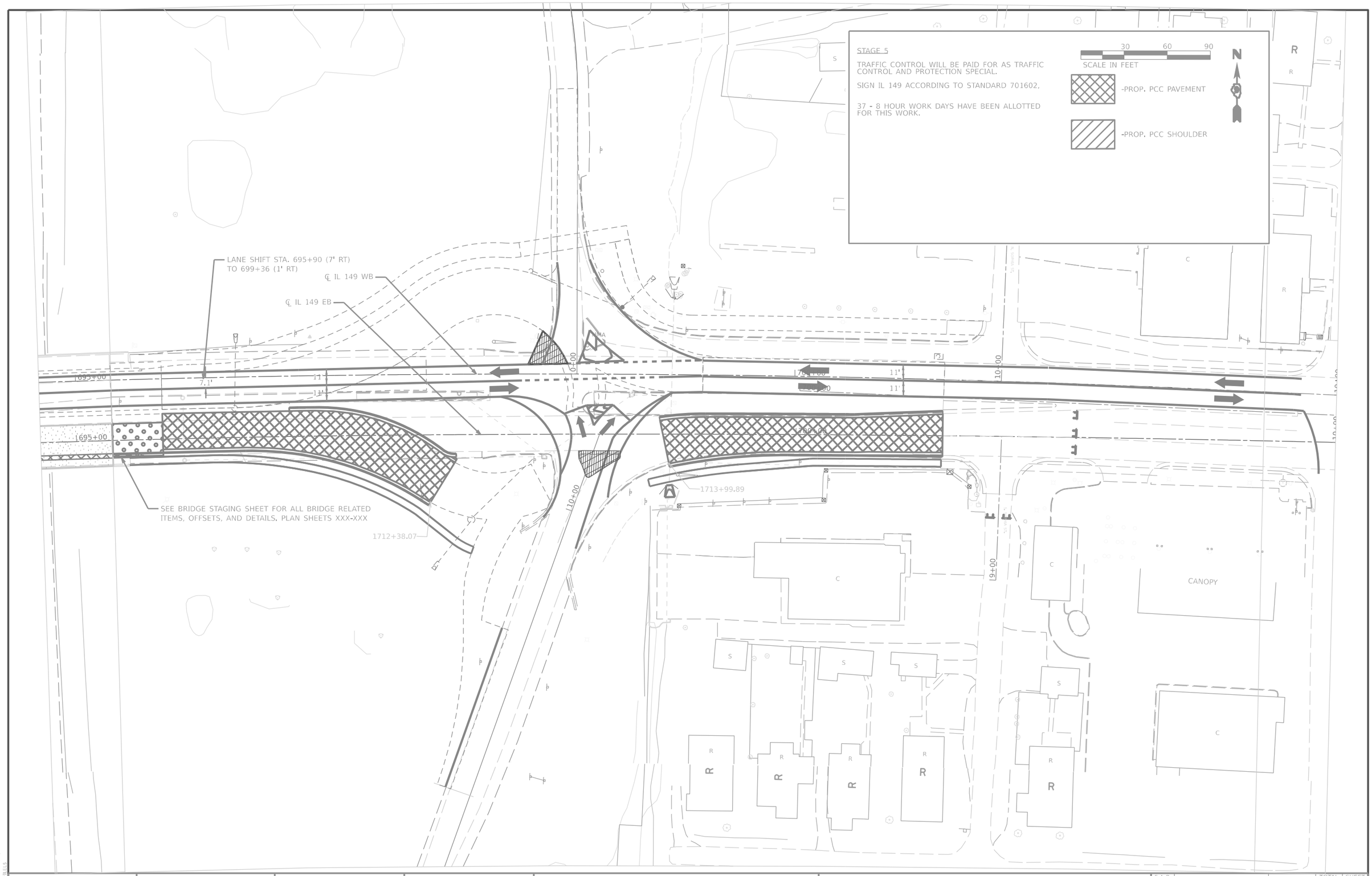

USER NAME = $USER$	DESIGNED -	REVISED -	
	DRAWN -	REVISED -	
PLOT SCALE = $SCALE$	CHECKED -	REVISED -	
PLOT DATE = $DATE$	DATE -	REVISED -	

STATE OF ILLINOIS
DEPARTMENT OF TRANSPORTATION

STAGE 5

SCALE: SHEET OF SHEETS STA. TO STA.

F.A.P. RTE.	SECTION	COUNTY	TOTAL SHEETS	SHEET NO.
873	(28-5)K-1	FRANKLIN	162	63
		CONTRACT NO. 78814		
		ILLINOIS FED. AID PROJECT		

MODEL: $MODELNAME$
FILE NAME: $FILE$

STAGE 5

TRAFFIC CONTROL WILL BE PAID FOR AS TRAFFIC CONTROL AND PROTECTION SPECIAL.

SIGN IL 149 ACCORDING TO STANDARD 701502.

37 - 8 HOUR WORK DAYS HAVE BEEN ALLOTTED FOR THIS WORK.

30 60 90
SCALE IN FEET

N

-PROP. PCC PAVEMENT

-PROP. PCC SHOULDER

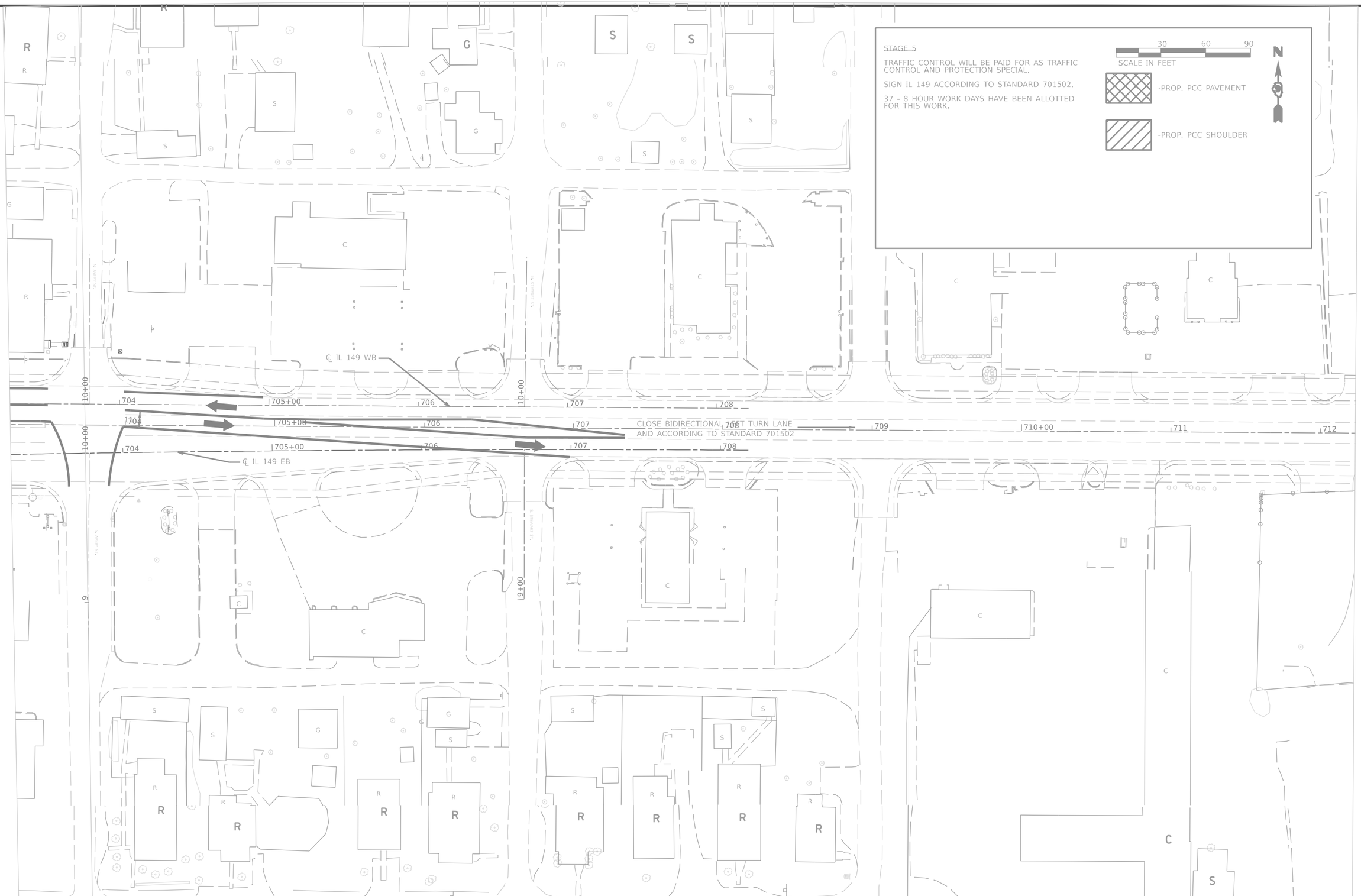

MODEL: $MODELNAME$
FILE NAME: $FILE$

USER NAME = $USER$	DESIGNED -	REVISED -	STATE OF ILLINOIS DEPARTMENT OF TRANSPORTATION
	DRAWN -	REVISED -	
PLOT SCALE = $SCALE$	CHECKED -	REVISED -	
PLOT DATE = $DATE$	DATE -	REVISED -	

STAGE 5

SCALE: SHEET OF SHEETS STA. TO STA.

F.A.P. RTE.	SECTION	COUNTY	TOTAL SHEETS	SHEET NO.
873	(28-5)K-1	FRANKLIN	162	64
		CONTRACT NO. 78814		
	ILLINOIS	FED. AID PROJECT		

LANE SHIFT STA. 695+90 (7' RT)
TO 699+36 (1' RT)

℄ IL 149 WB

℄ IL 149 EB

PROP. TEMPORARY PAVEMENT

695+00 696 697 698 699 700+00 701 702 703

10+00

9+00

CANOPY

STAGE 6

TRAFFIC CONTROL WILL BE PAID FOR AS TRAFFIC CONTROL AND PROTECTION SPECIAL.

REFER TO STAGE 5 SHEETS FOR TRAFFIC CONTROL LAYOUT

CLOSE THE I-57 NB OFF RAMP ACCORDING TO STANDARD 701451

5 - 24 HOUR WORK DAYS HAVE BEEN ALLOTTED FOR THIS WORK.

30 60 90
SCALE IN FEET

N

-PROP. PCC PAVEMENT

-PROP. PCC SHOULDER

MODEL: IL149UB1 - Stage6_2 [Sheet]
FILE NAME: pw://dbpw.dot.illinois.com:PWIDOT1/Documents/IDOT_D_ceDistrict_9/Projects/88141/DVD C4D22/arCADsheets/CAD/DVD-D9/78811-Stage6.dwg

USER NAME = Sean Greenlee	DESIGNED -	REVISED -	
	DRAWN -	REVISED -	
PLOT SCALE = 0.16666633 ' / in	CHECKED -	REVISED -	
PLOT DATE = 5/15/2023	DATE -	REVISED -	

STATE OF ILLINOIS
DEPARTMENT OF TRANSPORTATION

STAGE 6

SCALE: SHEET OF SHEETS STA. TO STA.

F.A.P. RTE.	SECTION	COUNTY	TOTAL SHEETS	SHEET NO.
873	(28-5)K-1	FRANKLIN	162	65

CONTRACT NO. 78814

ILLINOIS FED. AID PROJECT

STAGE 7

TRAFFIC CONTROL WILL BE PAID FOR AS TRAFFIC CONTROL AND PROTECTION SPECIAL.

REFER TO STAGE 5 SHEETS FOR TRAFFIC CONTROL LAYOUT

CLOSE THE I-57 SB ON RAMP ACCORDING TO STANDARD 701451

5 - 24 HOUR WORK DAYS HAVE BEEN ALLOTTED FOR THIS WORK.

30 60 90
SCALE IN FEET

-PROP. PCC PAVEMENT

-PROP. PCC PAVEMENT STAMPED COLORED

N

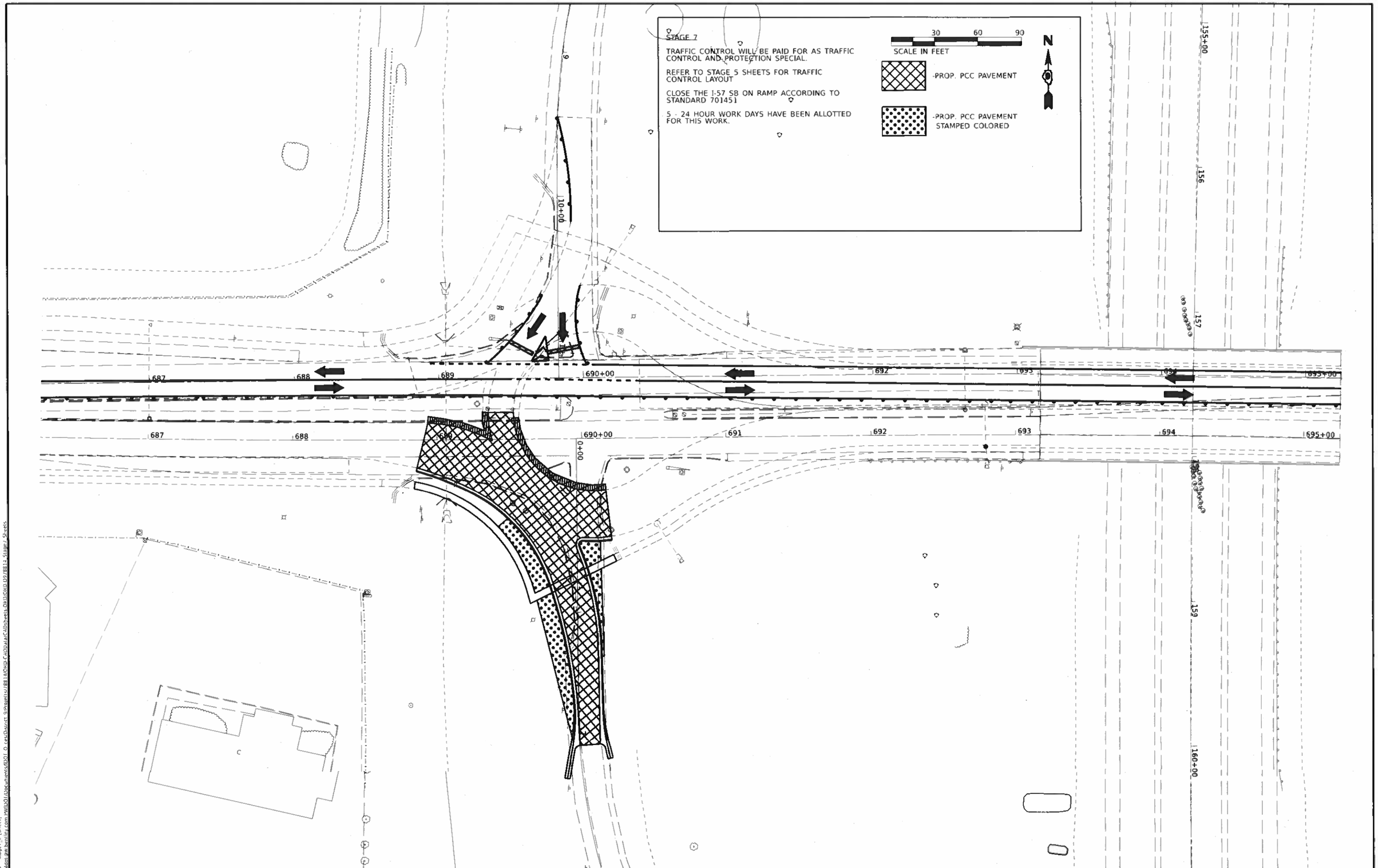

MODEL: IL149-L6 Stage7_2 [Sheet]
FILE NAME: /mnt/Alloy/gis_temp/ccm-swf1301/Documents/78814/Old-Cad/data/Cad/Sheets/0610-09/78814-Stage7_Sheets.dgn

USER NAME = Sean Greenlee	DESIGNED -	REVISED -	STATE OF ILLINOIS DEPARTMENT OF TRANSPORTATION	STAGE 7			F.A.P. RTE	SECTION	COUNTY	TOTAL SHEETS / SHEET NO.
	DRAWN -	REVISED -					873	(28-5)K-1	FRANKLIN	162 / 66
PLOT SCALE = 0.16666633 ' / in	CHECKED -	REVISED -							CONTRACT NO. 78814	
PLOT DATE = 5/15/2023	DATE -	REVISED -		SCALE:	SHEET OF SHEETS	STA. TO STA.		ILLINOIS FED. AID PROJECT		

STAGE 8

TRAFFIC CONTROL WILL BE PAID FOR AS TRAFFIC CONTROL AND PROTECTION SPECIAL.

SIGN IL 149 ACCORDING TO STANDARD 701602, REPLACE W20-5L(0)-48 WITH W1-4R

9 - 24 HOUR WORK DAYS HAVE BEEN ALLOTTED FOR THIS WORK.

0 30 60 90
SCALE IN FEET

N

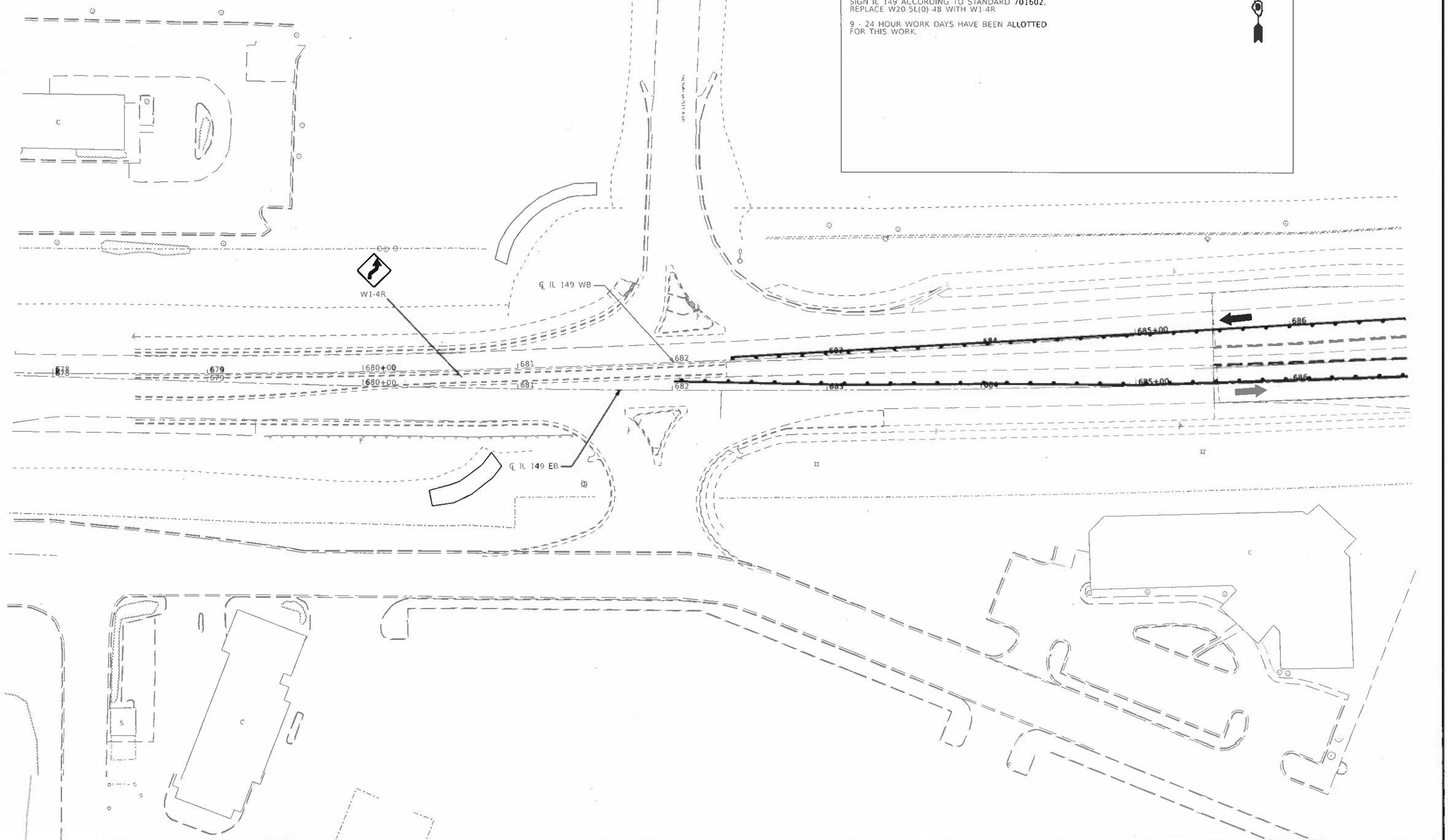

USER NAME = Sean Greenlee	DESIGNED -	REVISED -	STATE OF ILLINOIS DEPARTMENT OF TRANSPORTATION
	DRAWN -	REVISED -	
PLOT SCALE = 0.16666633 / in	CHECKED -	REVISED -	
PLOT DATE = 5/15/2023	DATE -	REVISED -	

STAGE 8

SCALE: SHEET OF SHEETS STA. TO STA.

F.A.P. RTE.	SECTION	COUNTY	TOTAL SHEETS	SHEET NO.
873	(28-5)K-1	FRANKLIN	162	67

CONTRACT NO. 78814

ILLINOIS FED. AID PROJECT

MODEL: IL149LG - Stage8_1 [Sheet]
FILE NAME: pw://dpw.bentley.com:PWIDOT:Documents:8001 D ceuDistrict 9\Projects\78814\ROW\CADData\CADSheets\ROW\D9\78814-Stage8.dgn

STAGE 8

TRAFFIC CONTROL WILL BE PAID FOR AS TRAFFIC CONTROL AND PROTECTION SPECIAL.

SIGN IL 149 ACCORDING TO STANDARD 701602, REPLACE W20-5L(0)-48 WITH W1-4R

9 - 24 HOUR WORK DAYS HAVE BEEN ALLOTTED FOR THIS WORK.

0 30 60 90
SCALE IN FEET

N

PROP. PCC PAVEMENT STAMPED AND COLORED

PROP. LANDSCAPING GRAVEL

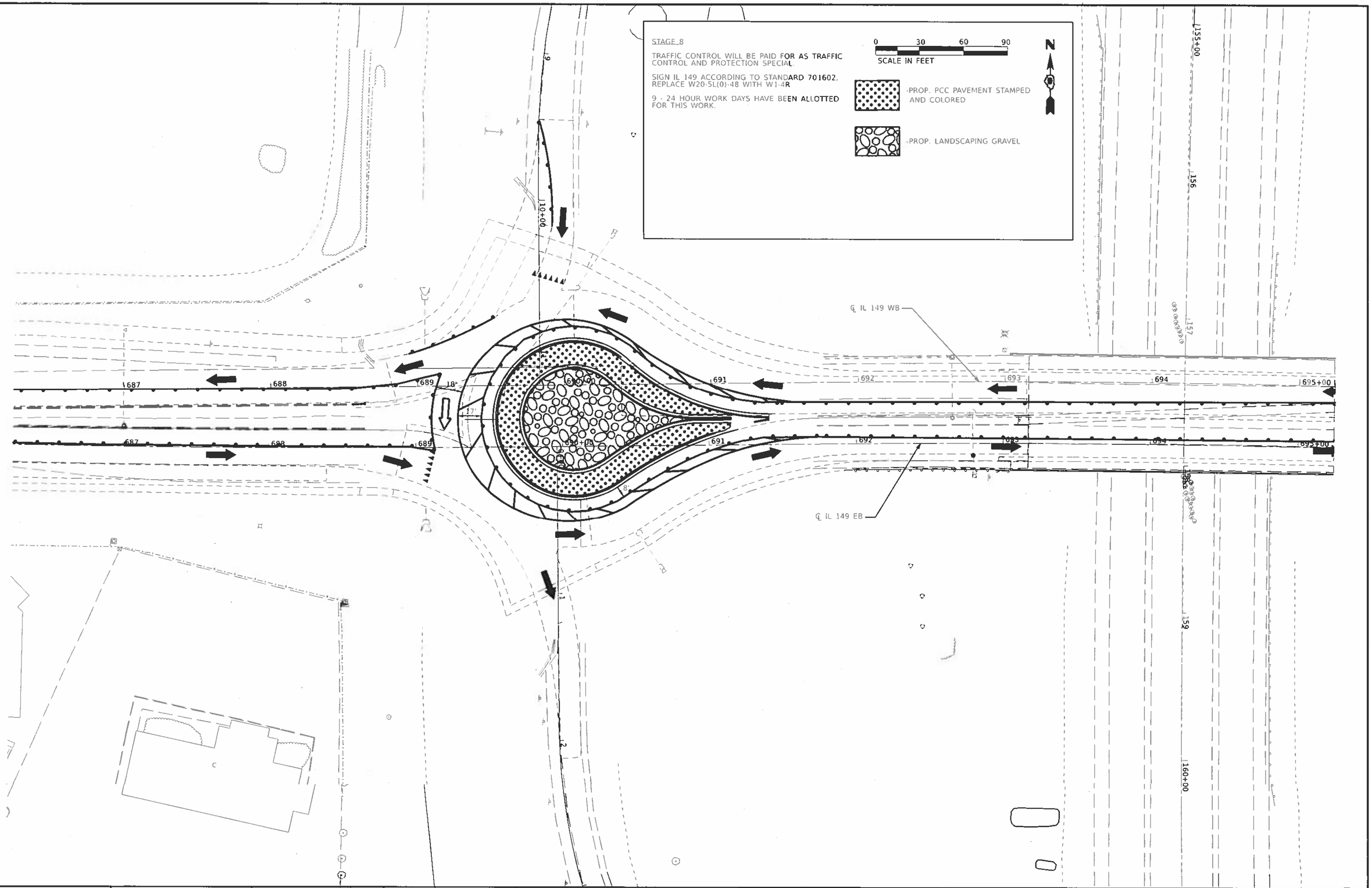

USER NAME = Sean Greenlee	DESIGNED -	REVISED -	STATE OF ILLINOIS DEPARTMENT OF TRANSPORTATION	STAGE 8	F.A.P. RTE.	SECTION	COUNTY	TOTAL SHEETS	SHEET NO.
	DRAWN -	REVISED -			873	(28-5)K-1	FRANKLIN	162	68
PLOT SCALE = 0.16666633 ' / in	CHECKED -	REVISED -					CONTRACT NO. 78814		
PLOT DATE = 5/15/2023	DATE -	REVISED -		SCALE: SHEET OF SHEETS STA. TO STA.			ILLINOIS FED. AID PROJECT		

MODEL: IL149LG - Stage8_2 [Sheet]
FILE NAME: pw:\\ildot.pw.bentley.com:PWIDOT\Documents\D0\D-6\ed0kacr\Projects\78814\Final\Contract\Sheets\040\040-1091881-Stage8.dgn

STAGE 8

TRAFFIC CONTROL WILL BE PAID FOR AS TRAFFIC CONTROL AND PROTECTION SPECIAL.

SIGN IL 149 ACCORDING TO STANDARD 701602, REPLACE W20-5L(0)-48 WITH W1-4R

9 - 24 HOUR WORK DAYS HAVE BEEN ALLOTTED FOR THIS WORK.

0 30 60 90
SCALE IN FEET

N

-PROP. PCC PAVEMENT STAMPED AND COLORED

-PROP. LANDSCAPING GRAVEL

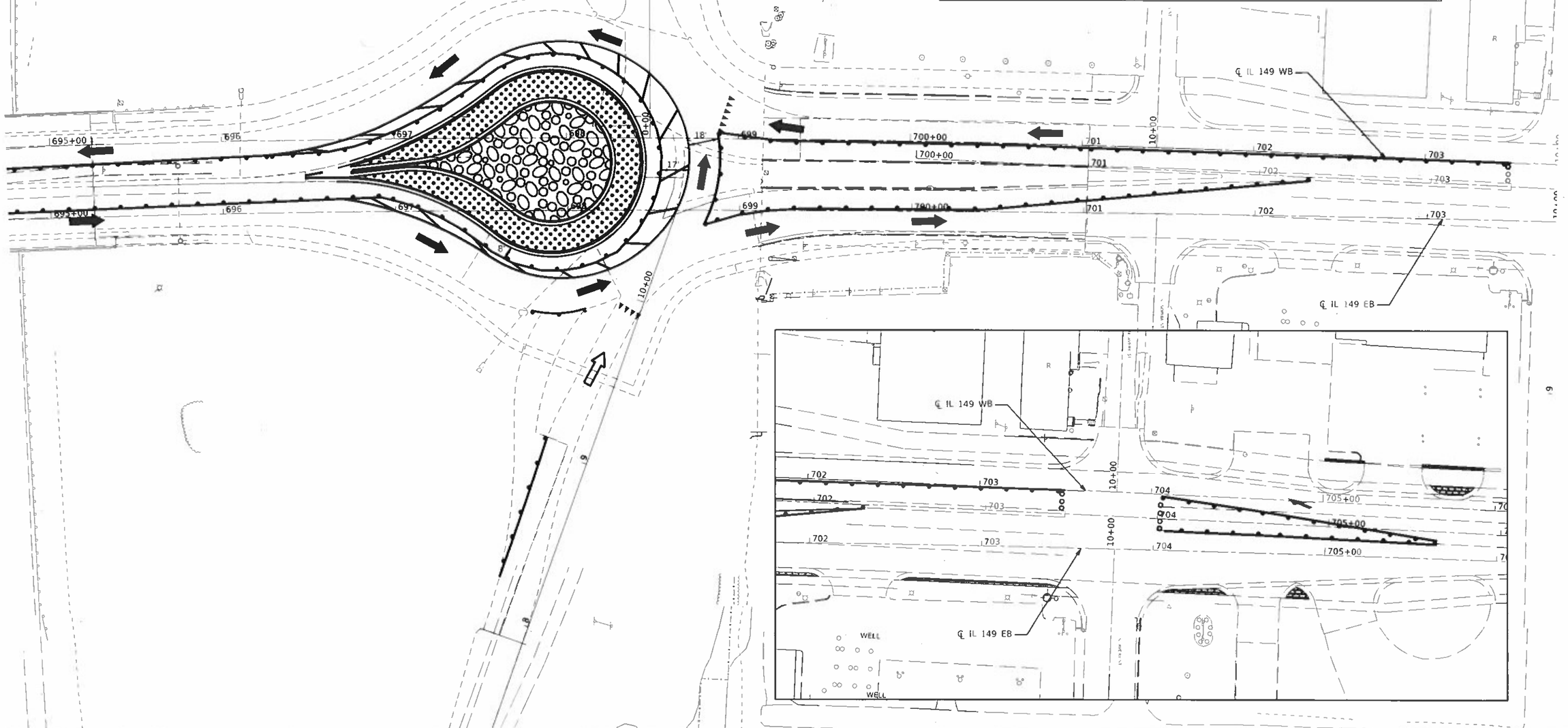

USER NAME = Sean Greenlee	DESIGNED -	REVISED -	
	DRAWN -	REVISED -	
PLOT SCALE = 0.16666633 ' / in	CHECKED -	REVISED -	
PLOT DATE = 5/15/2023	DATE -	REVISED -	

STATE OF ILLINOIS
DEPARTMENT OF TRANSPORTATION

STAGE 8

SCALE: SHEET OF SHEETS STA. TO STA.

F.A.P. RTE.	SECTION	COUNTY	TOTAL SHEETS	SHEET NO.
873	(28-5)K-1	FRANKLIN	162	69
		CONTRACT NO. 78814		
		ILLINOIS FED. AID PROJECT		

MODEL: IL149LB_Stage8_3 (Sheet)
FILE NAME: P:\Projects\Illinois DOT\78814\Drawings\78814-Stage8.dgn

STAGE 9

TRAFFIC CONTROL WILL BE PAID FOR AS TRAFFIC CONTROL AND PROTECTION SPECIAL.

SIGN IL 149 ACCORDING TO STANDARD 701602. REPLACE W20-5L(0)-48 WITH W1-4R

10 CONSECUTIVE - 24 HOUR WORK DAYS HAVE BEEN ALLOTTED FOR THIS WORK.

3 CONSECUTIVE - 24 HOUR RAMP RENTAL DAYS HAVE BEEN PROVIDED TO CONSTRUCT PROPOSED SPLITTER ISLANDS TO MEET THE DROP OFF POLICY AND OPEN THE LEFT TURNING MOVEMENTS TO AND FROM THE RAMPS.

THESE 3 RAMP RENTAL DAYS SHALL START AT THE BEGINING OF STAGE 9.

0 30 60 90
SCALE IN FEET

N

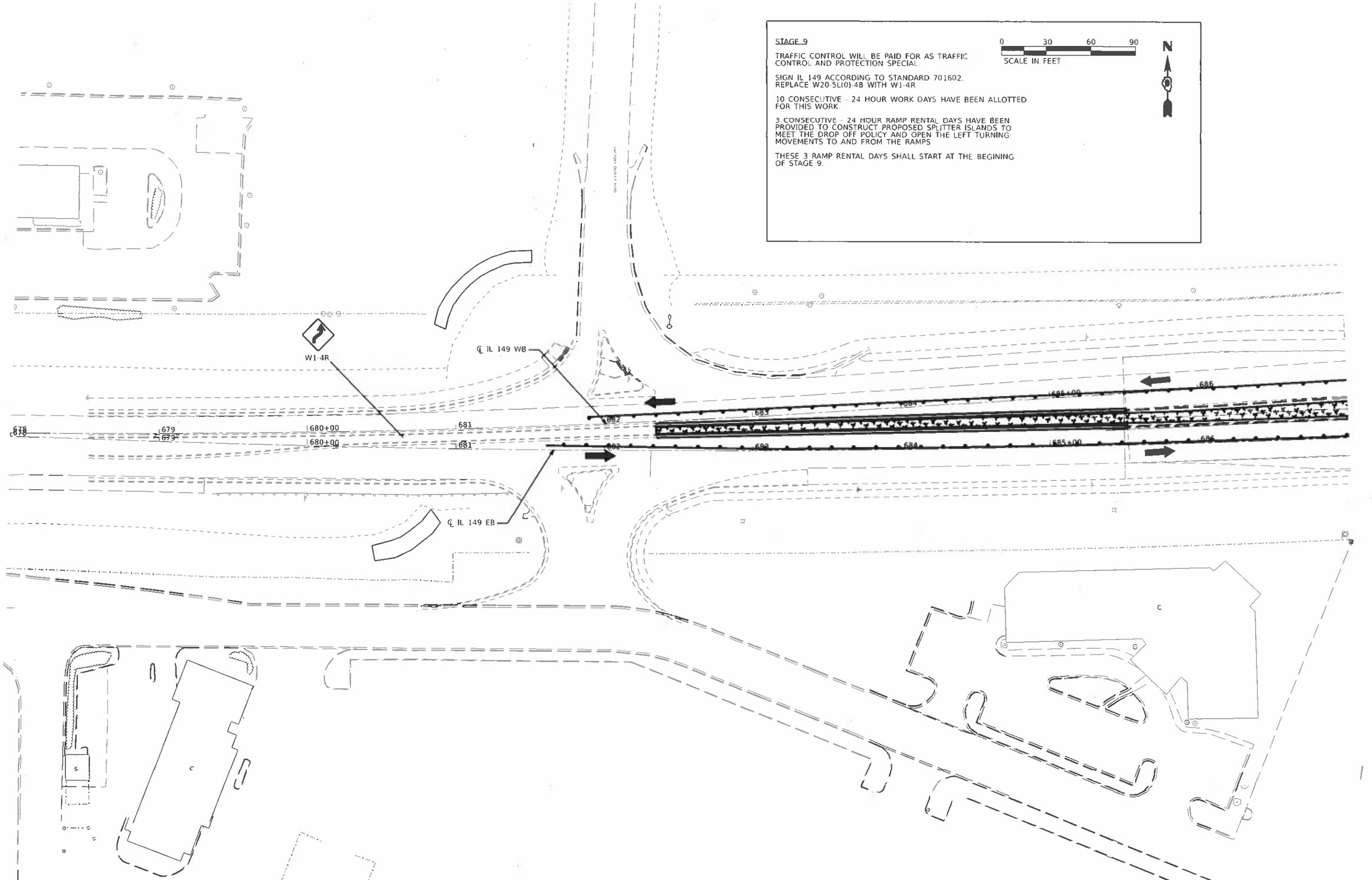

USER NAME = Sean Greenlee	DESIGNED -	REVISED -	
	DRAWN -	REVISED -	
PLOT SCALE = 0.16666633 ' / in	CHECKED -	REVISED -	
PLOT DATE = 5/15/2023	DATE -	REVISED -	

STATE OF ILLINOIS
DEPARTMENT OF TRANSPORTATION

STAGE 9

SCALE: SHEET OF SHEETS STA. TO STA.

F.A.P. RTE.	SECTION	COUNTY	TOTAL SHEETS	SHEET NO.
873	(28-5)K-1	FRANKLIN	162	70
		CONTRACT NO. 78814		
		ILLINOIS FED. AID PROJECT		

MODEL: IL149-EB - Stage9_1 (Sheet)
FILE NAME: pw:\\gdc-pw.bentley.com:PWIDOT\Documents\IDOT O'Leary District 9\Projects\78814\DHD-CAD\data\All\Sheets OHD\DHD-D9-78814-Stage9 Sheets

STAGE 9

TRAFFIC CONTROL WILL BE PAID FOR AS TRAFFIC CONTROL AND PROTECTION SPECIAL.

SIGN IL 149 ACCORDING TO STANDARD 701602. REPLACE W20-5L(0)-48 WITH W1-4R

10 - 24 HOUR WORK DAYS HAVE BEEN ALLOTTED FOR THIS WORK.

3 CONSECUTIVE - 24 HOUR RAMP RENTAL DAYS HAVE BEEN PROVIDED TO CONSTRUCT PROPOSED SPLITTER ISLANDS TO MEET THE DROP OFF POLICY AND OPEN THE LEFT TURNING MOVEMENTS TO AND FROM THE RAMPS.

THESE 3 RAMP RENTAL DAYS SHALL START AT THE BEGINING OF STAGE 9.

0 30 60 90
SCALE IN FEET

N

-PROP. PCC PAVEMENT STAMPED AND COLORED

-PROP. CONTRETE MEDIAN SURFACE 4" STAMPED AND COLORED .

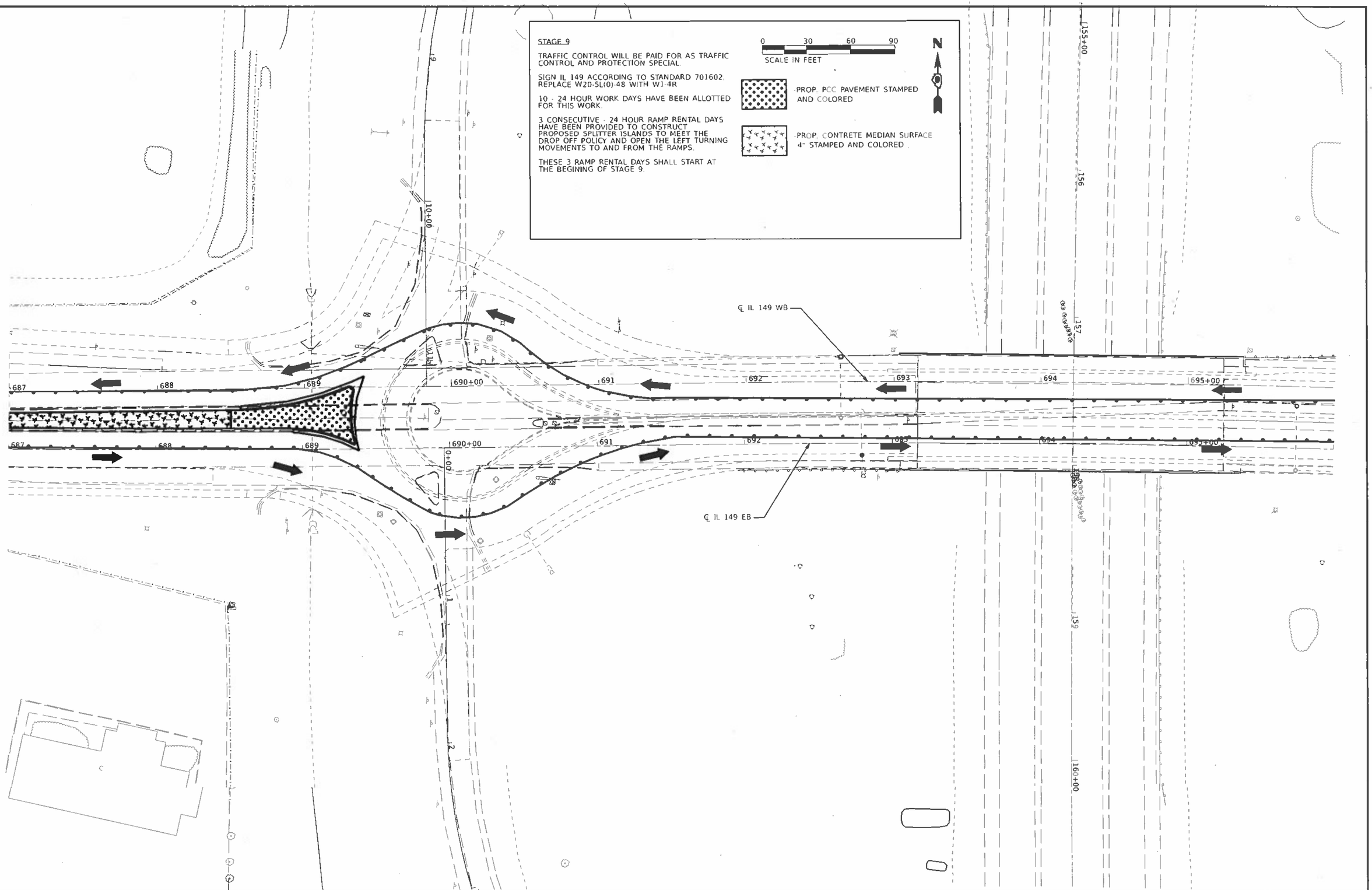

USER NAME = Sean Greenlee	DESIGNED -	REVISED -	
	DRAWN -	REVISED -	
PLOT SCALE = 0.16666633 ' / in	CHECKED -	REVISED -	
PLOT DATE = 5/15/2023	DATE -	REVISED -	

STATE OF ILLINOIS
DEPARTMENT OF TRANSPORTATION

STAGE 9

SCALE: SHEET OF SHEETS STA. TO STA.

F.A.P. RTE.	SECTION	COUNTY	TOTAL SHEETS	SHEET NO
873	(28-5)K-1	FRANKLIN	162	71

CONTRACT NO 78814

ILLINOIS FED. AID PROJECT

MODEL: IL149EB - Stage9_2 [Sheet]
FILE NAME: pw://idot.pw.bentley.com:PWIDOT/Documents/60401 0 Leo District 9/projects/78814/DHD CADData/CADSheets OH/DHD DM 78814 Stage9 Sheets

STAGE 9

TRAFFIC CONTROL WILL BE PAID FOR AS TRAFFIC CONTROL AND PROTECTION SPECIAL.

SIGN IL 149 ACCORDING TO STANDARD 701501

10 - 24 HOUR WORK DAYS HAVE BEEN ALLOTTED FOR THIS WORK.

3 CONSECUTIVE - 24 HOUR RAMP RENTAL DAYS HAVE BEEN PROVIDED TO CONSTRUCT PROPOSED SPLITTER ISLANDS TO MEET THE DROP OFF POLICY AND OPEN THE LEFT TURNING MOVEMENTS TO AND FROM THE RAMPS.

THESE 3 RAMP RENTAL DAYS SHALL START AT THE BEGINING OF STAGE 9.

0 30 60 90
SCALE IN FEET

N

-PROP. PCC PAVEMENT STAMPED AND COLORED

-PROP. CONTRETE MEDIAN SURFACE 4" STAMPED AND COLORED

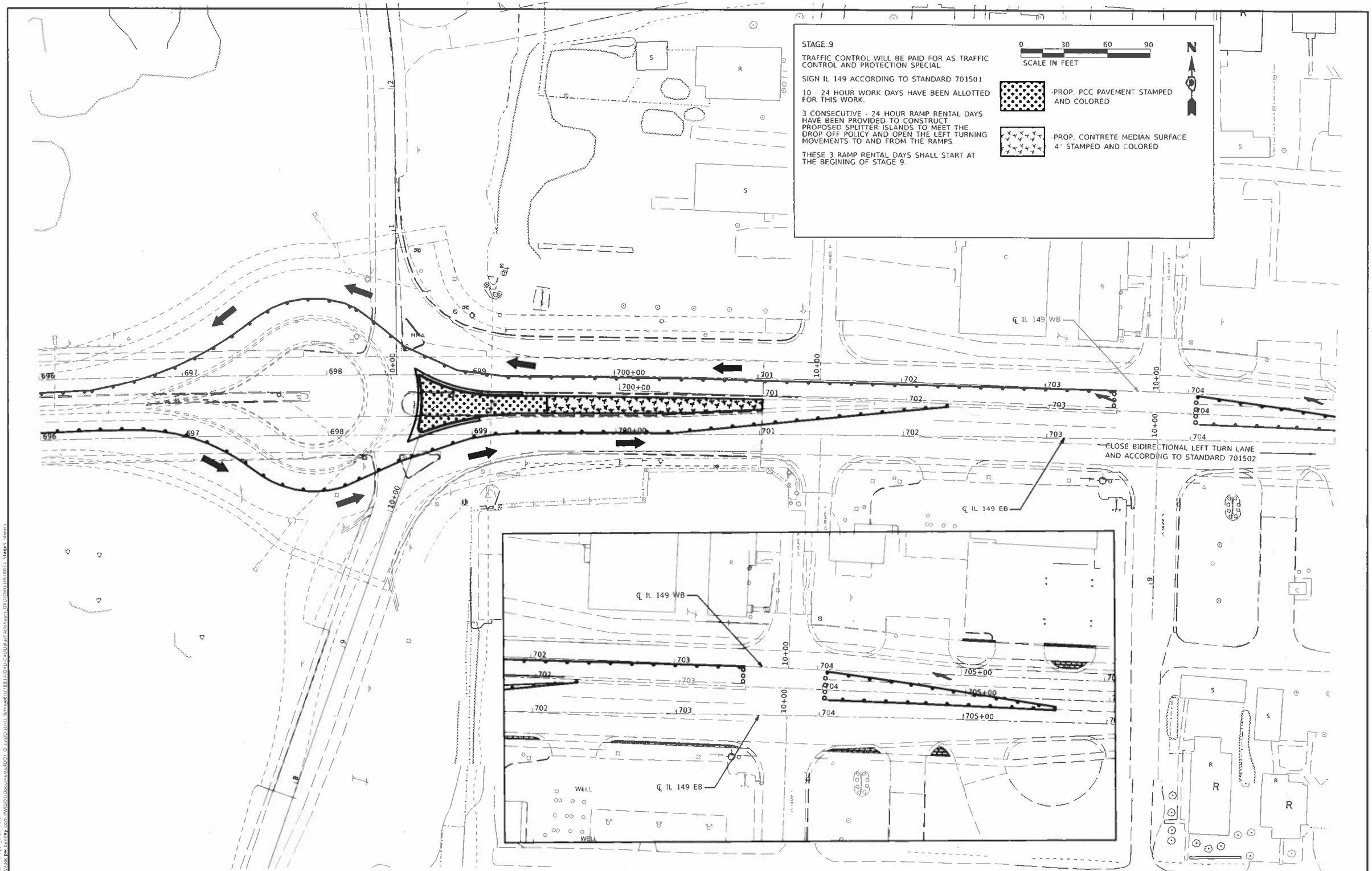

USER NAME = Sean Greenlee	DESIGNED -	REVISED -
	DRAWN -	REVISED -
PLOT SCALE = 0.16666633 ' / in	CHECKED -	REVISED -
PLOT DATE = 5/15/2023	DATE -	REVISED -

STATE OF ILLINOIS
DEPARTMENT OF TRANSPORTATION

STAGE 9

SCALE: | SHEET OF SHEETS | STA. TO STA.

F.A.P. RTE.	SECTION	COUNTY	TOTAL SHEETS	SHEET NO.
873	(28-5)K-1	FRANKLIN	162	72

CONTRACT NO. 78814

ILLINOIS FED. AID PROJECT

MODEL: IL149LU - Stage9_3 [Sheet]
FILE NAME: pw://ildot.pw.bentley.com:PWIDOT/Documents/D01 - O cadDistrict 9/projects/78814/DRU-CAD/Data/CADsheets-DRU/DRU-B9728814-Stage9-Sheets

PERIMETER EROSION BARRIER

PERIMETER EROSION BARRIER

PERIMETER EROSION BARRIER

PERIMETER EROSION BARRIER

PERIMETER EROSION BARRIER

PERIMETER EROSION BARRIER

STONE RIPRAP, CLASS A4

-EROSION CONTROL BLANKET

-SEEDING, CLASS 1B

-TEMPORARY DITCH CHECK

- STONE DUMPED RIPRAP, CLASS A4

RIPRAP

RIPRAP

BILLBOARD

ROCK

CONC

HMA

O&C

MODEL: $MODELNAME$
FILE NAME: $FILE$

USER NAME = $USER$	DESIGNED -	REVISED -	
	DRAWN -	REVISED -	
PLOT SCALE = $SCALE$	CHECKED -	REVISED -	
PLOT DATE = $DATE$	DATE -	REVISED -	

STATE OF ILLINOIS
DEPARTMENT OF TRANSPORTATION

EROSION CONTROL

SCALE: | SHEET OF SHEETS | STA. TO STA.

F.A.P. RTE.	SECTION	COUNTY	TOTAL SHEETS	SHEET NO.
873	(28-5) K-1	FRANKLIN	162	73
		CONTRACT NO. 78814		
		ILLINOIS	FED. AID PROJECT	

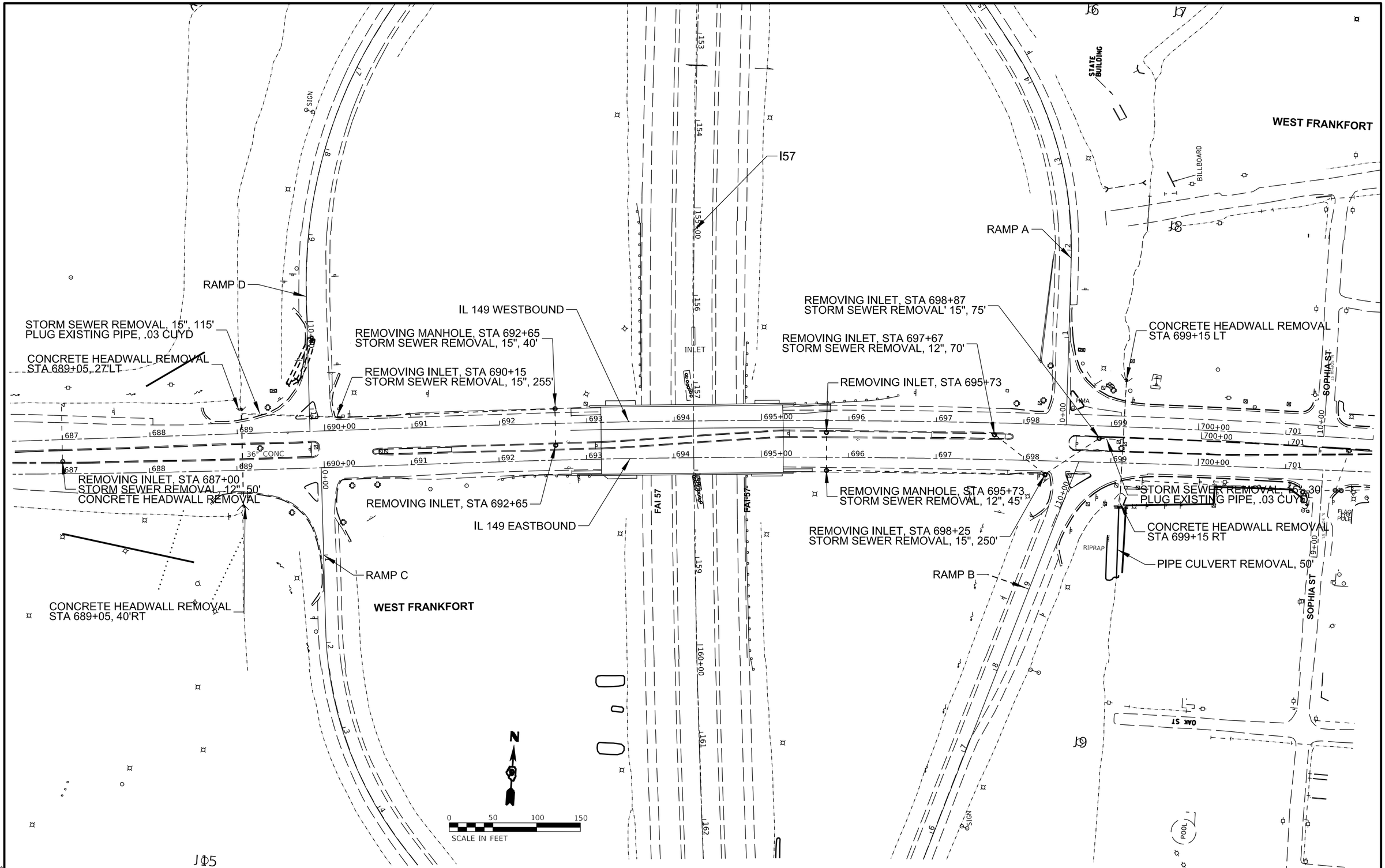

USER NAME = $USER$	DESIGNED -	REVISED -	STATE OF ILLINOIS DEPARTMENT OF TRANSPORTATION
	DRAWN -	REVISED -	
PLOT SCALE = $SCALE$	CHECKED -	REVISED -	
PLOT DATE = $DATE$	DATE -	REVISED -	

DRAINAGE REMOVAL SHEET

SCALE: SHEET OF SHEETS STA. TO STA.

F.A.P. RTE.	SECTION	COUNTY	TOTAL SHEETS	SHEET NO.
873	28-5(K-1)	FRANKLIN	162	74
		CONTRACT NO. 78814		
		ILLINOIS	FED. AID PROJECT	

MODEL: $MODELNAME$
FILE NAME: $FILE$

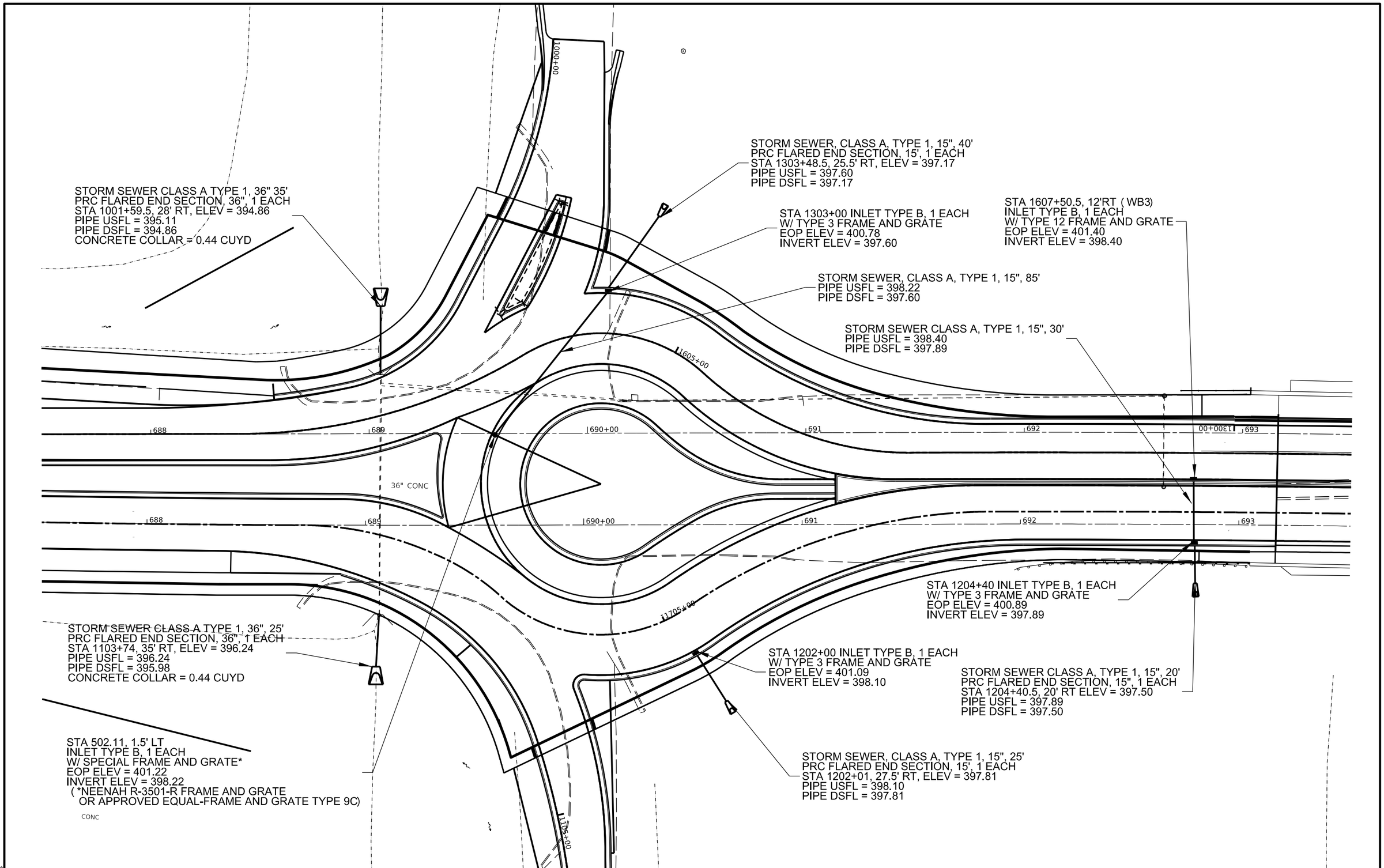

MODEL: $MODELNAME$
FILE NAME: $FILE$

USER NAME = $USER$	DESIGNED -	REVISED -	
	DRAWN -	REVISED -	
PLOT SCALE = $SCALE$	CHECKED -	REVISED -	
PLOT DATE = $DATE$	DATE -	REVISED -	

STATE OF ILLINOIS
DEPARTMENT OF TRANSPORTATION

STORM SEWER

SCALE: | SHEET OF SHEETS | STA. TO STA.

F.A.P. RTE.	SECTION	COUNTY	TOTAL SHEETS	SHEET NO.
	(28-5) K-1	FRANKLIN	162	75
		CONTRACT NO. 78814		
	ILLINOIS	FED. AID PROJECT		

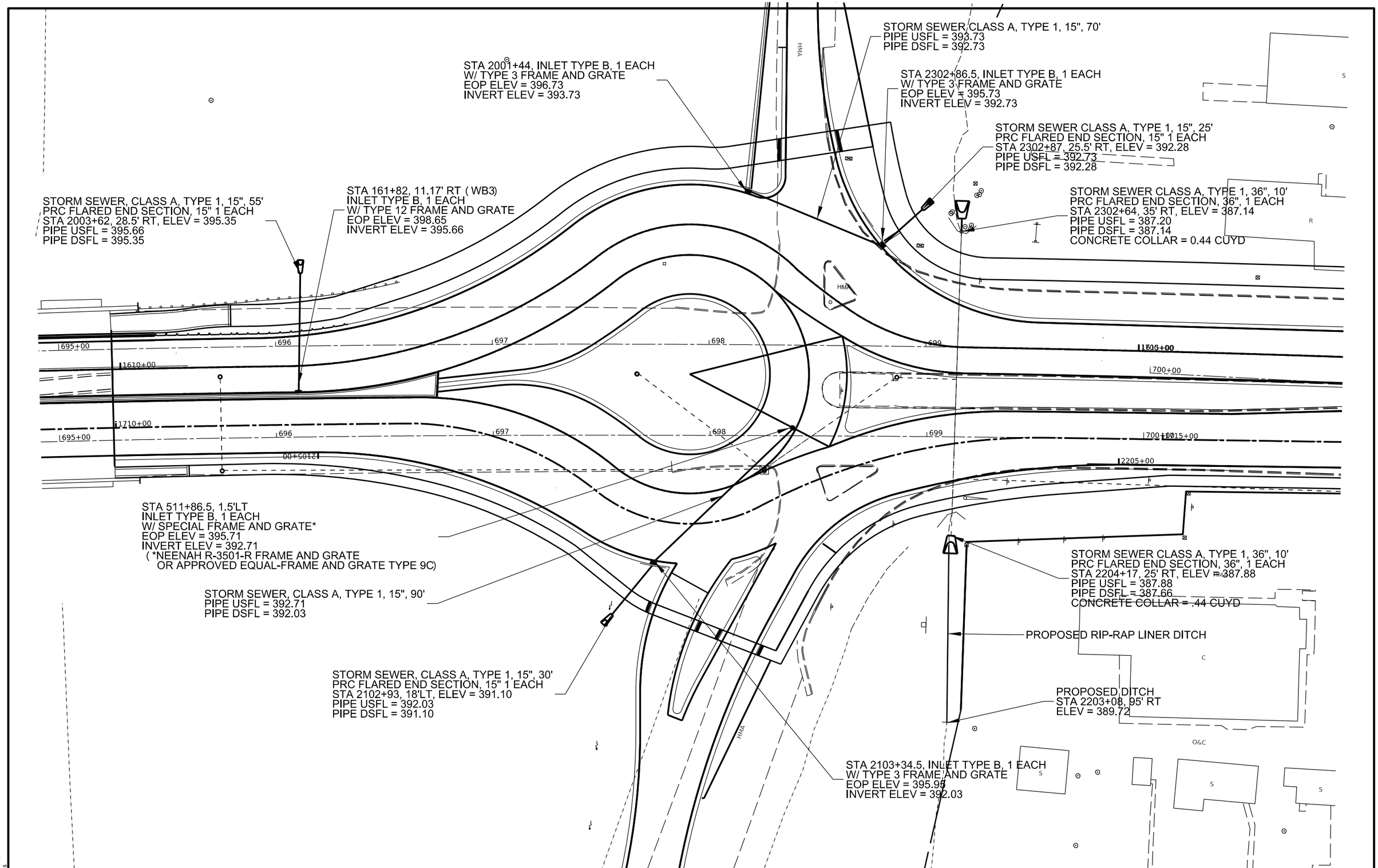

MODEL: $MODELNAME$
FILE NAME: $FILE$

USER NAME = $USER$	DESIGNED -	REVISED -	
	DRAWN -	REVISED -	
PLOT SCALE = $SCALE$	CHECKED -	REVISED -	
PLOT DATE = $DATE$	DATE -	REVISED -	

STATE OF ILLINOIS
DEPARTMENT OF TRANSPORTATION

STORM SEWER

SCALE: | SHEET OF SHEETS | STA. TO STA.

F.A.P. RTE.	SECTION	COUNTY	TOTAL SHEETS	SHEET NO.
873	(28-5) K-1	FRANKLIN	162	76

CONTRACT NO. 78814

ILLINOIS | FED. AID PROJECT

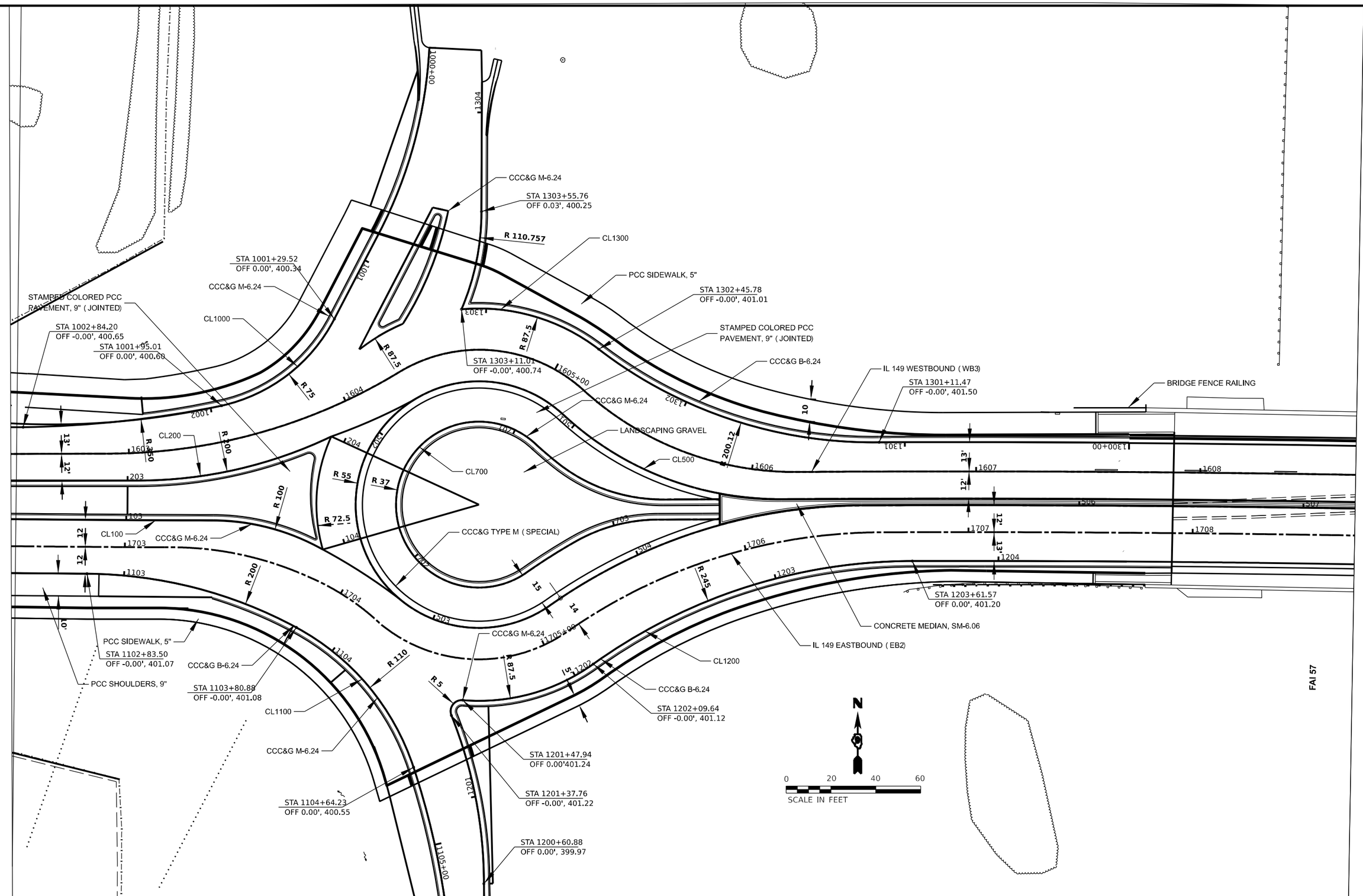

MODEL: $MODELNAME$
FILE NAME: $FILE$

USER NAME = $USER$	DESIGNED -	REVISED -	
	DRAWN -	REVISED -	
PLOT SCALE = $SCALE$	CHECKED -	REVISED -	
PLOT DATE = $DATE$	DATE -	REVISED -	

STATE OF ILLINOIS
DEPARTMENT OF TRANSPORTATION

GEOMETRICS SHEET

SCALE: SHEET OF SHEETS STA. TO STA.

F.A.P. RTE.	SECTION	COUNTY	TOTAL SHEETS	SHEET NO.
873	(28-5) K-1	FRANKLIN	162	77
		CONTRACT NO. 78814		
		ILLINOIS FED. AID PROJECT		

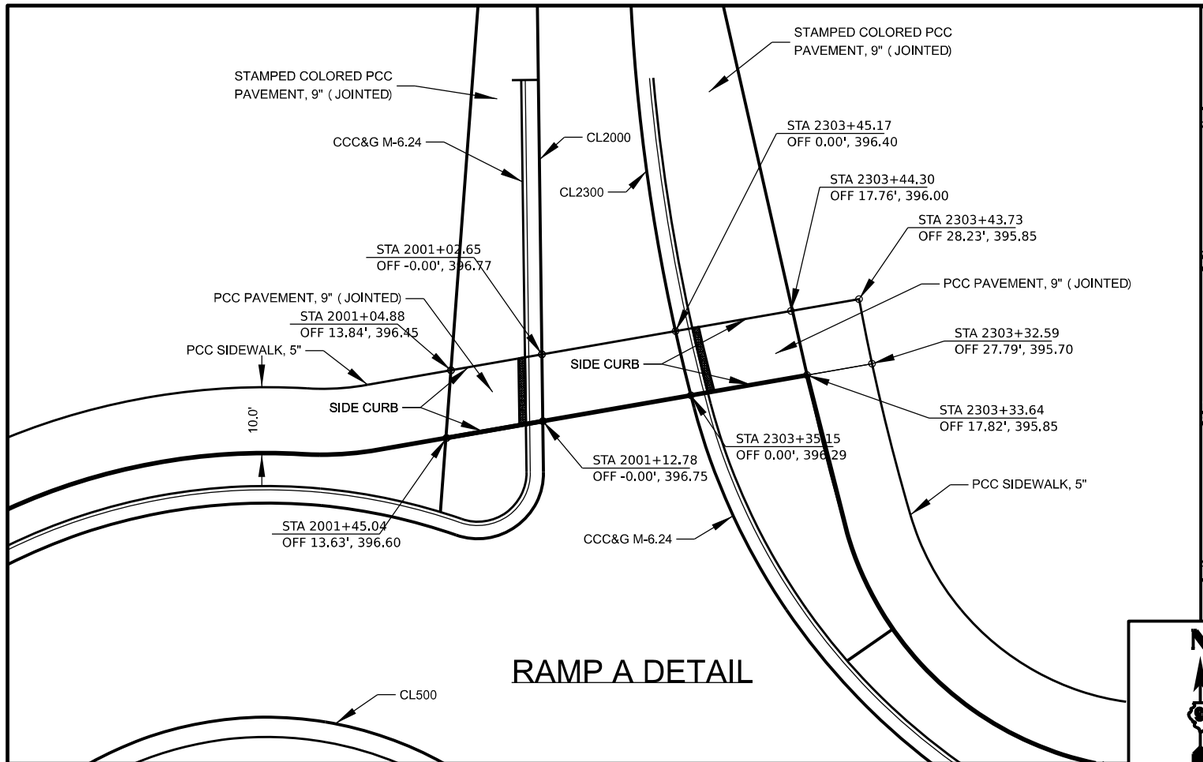

RAMP A DETAIL

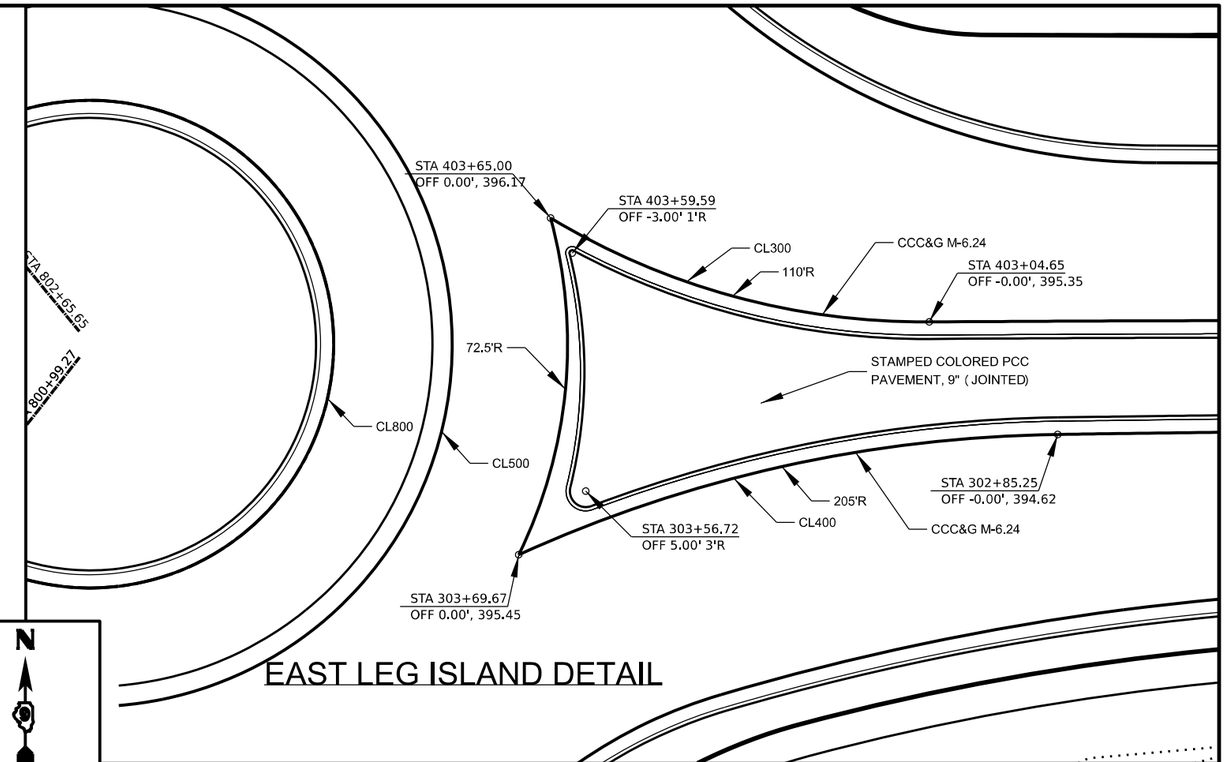

EAST LEG ISLAND DETAIL

N

NOT TO SCALE

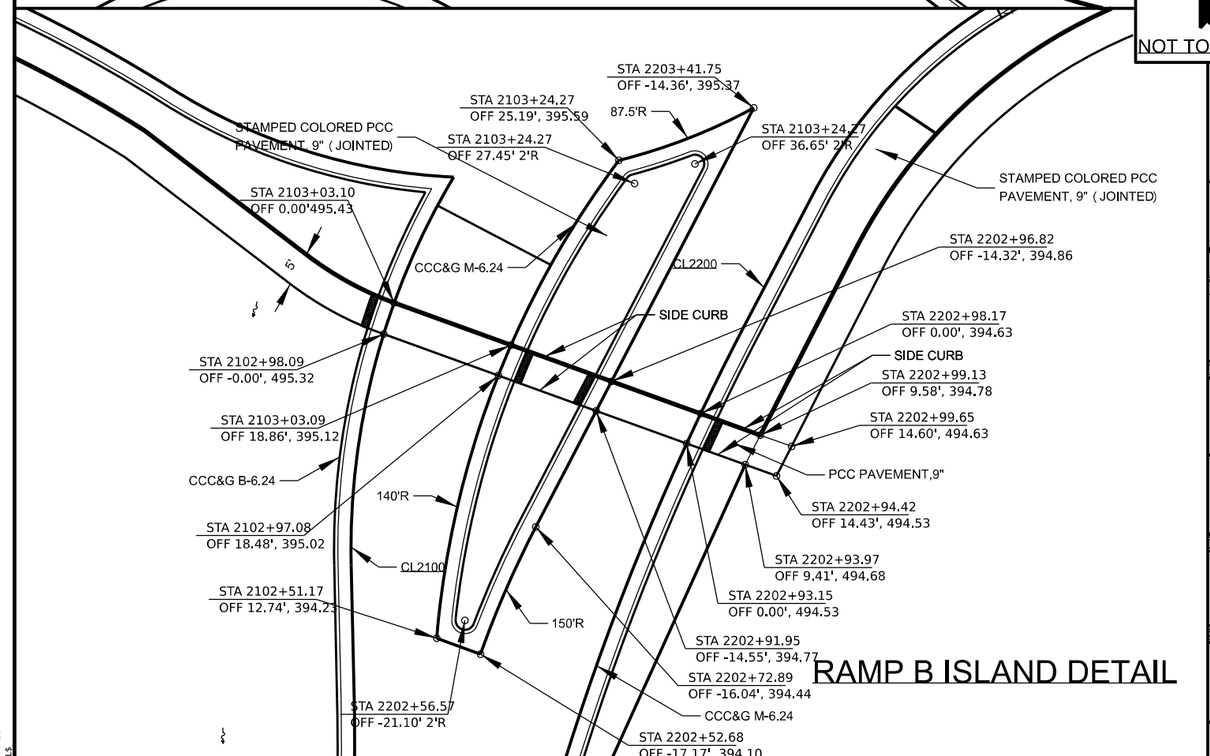

RAMP B ISLAND DETAIL

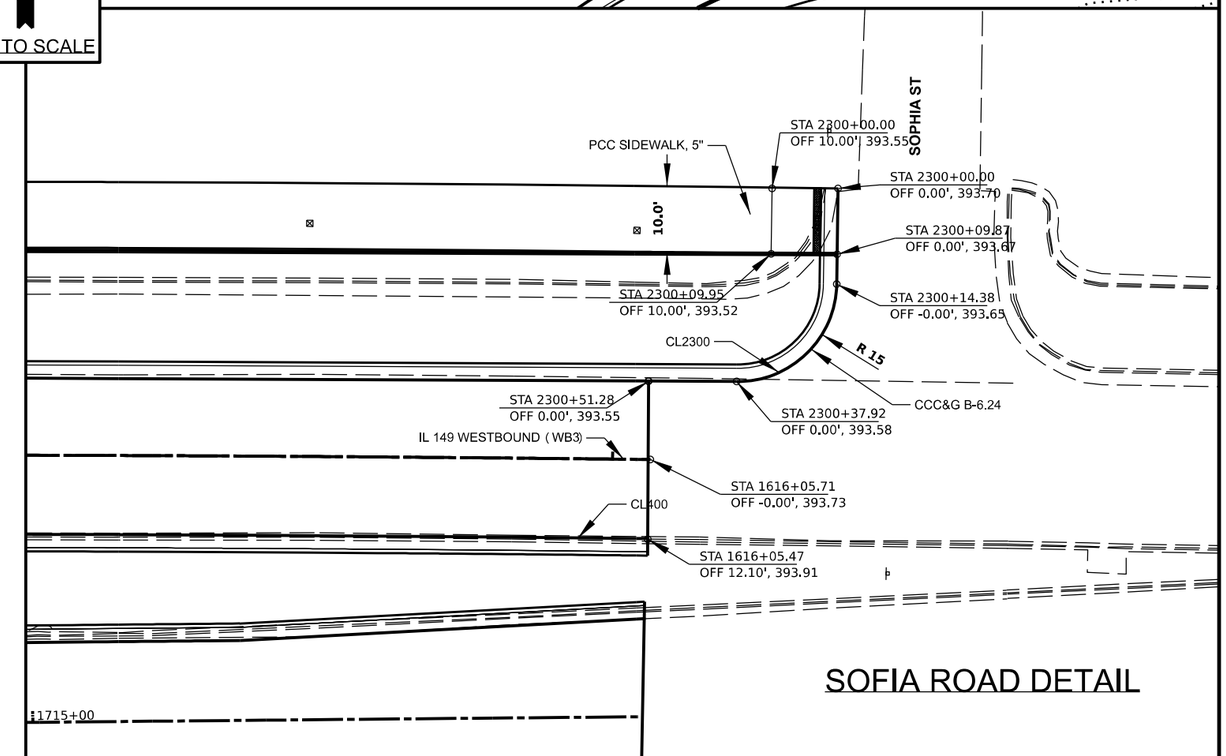

SOFIA ROAD DETAIL

MODEL: $MODELNAME$
FILE NAME: $FILEL$

USER NAME = $USER$	DESIGNED -	REVISED -	
	DRAWN -	REVISED -	
PLOT SCALE = $SCALE$	CHECKED -	REVISED -	
PLOT DATE = $DATE$	DATE -	REVISED -	

STATE OF ILLINOIS
DEPARTMENT OF TRANSPORTATION

GEOMETRICS SHEET

SCALE: | SHEET OF SHEETS | STA. TO STA.

F.A.P. RTE.	SECTION	COUNTY	TOTAL SHEETS	SHEET NO.
873	(28-5) K-1	FRANKLIN	162	78

CONTRACT NO.

ILLINOIS | FED. AID PROJECT

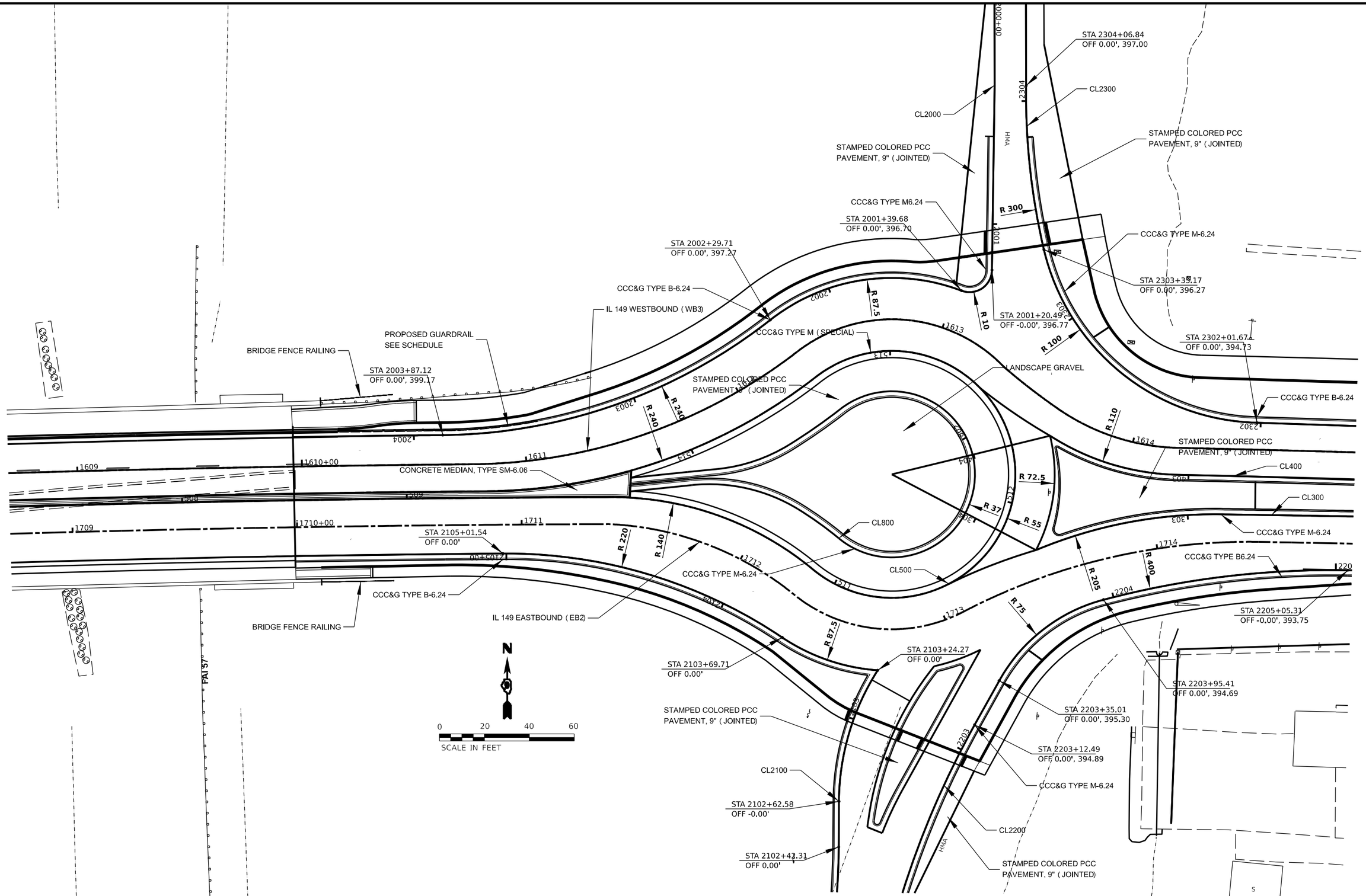

MODEL: $MODELNAME$
FILE NAME: $FILE$

USER NAME = $USER$	DESIGNED -	REVISED -	
	DRAWN -	REVISED -	
PLOT SCALE = $SCALE$	CHECKED -	REVISED -	
PLOT DATE = $DATE$	DATE -	REVISED -	

STATE OF ILLINOIS
DEPARTMENT OF TRANSPORTATION

GEOMETRICS SHEET

SCALE: | SHEET OF SHEETS | STA. TO STA.

F.A.P. RTE.	SECTION	COUNTY	TOTAL SHEETS	SHEET NO.
873	(28-5) K-1	FRANKLIN	162	79
		CONTRACT NO.		
		ILLINOIS	FED. AID PROJECT	

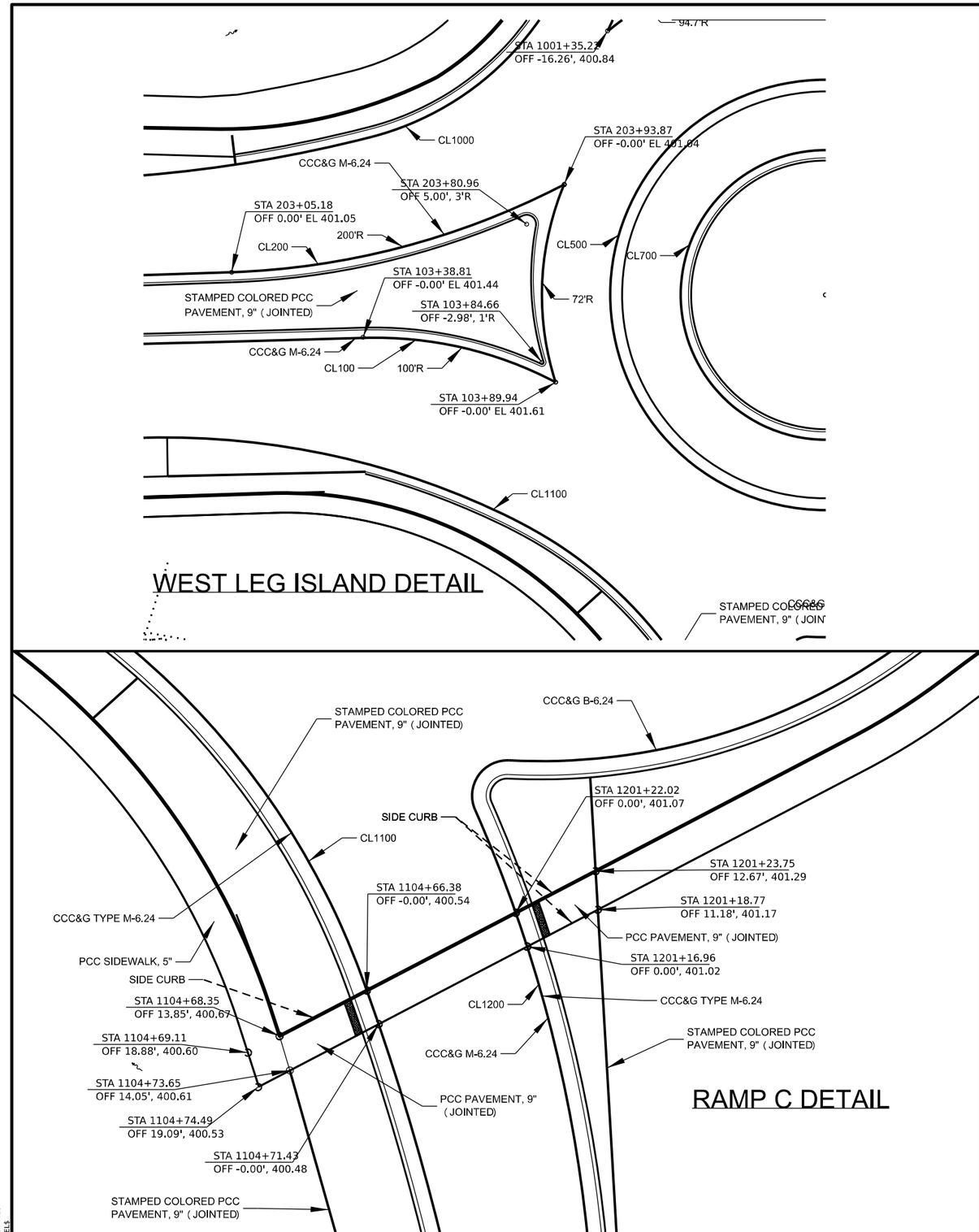

WEST LEG ISLAND DETAIL

RAMP D ISLAND DETAIL

RAMP C DETAIL

MODEL: $MODELNAME$
FILE NAME: $FILE$

USER NAME = $USER$	DESIGNED -	REVISED -	
	DRAWN -	REVISED -	
PLOT SCALE = $SCALE$	CHECKED -	REVISED -	
PLOT DATE = $DATE$	DATE -	REVISED -	

STATE OF ILLINOIS
DEPARTMENT OF TRANSPORTATION

GEOMETRICS SHEET

SCALE: | SHEET OF SHEETS | STA. TO STA.

F.A.P. RTE.	SECTION	COUNTY	TOTAL SHEETS	SHEET NO.
873	(28-5) K-1	FRANKLIN	162	80

CONTRACT NO.

ILLINOIS | FED. AID PROJECT

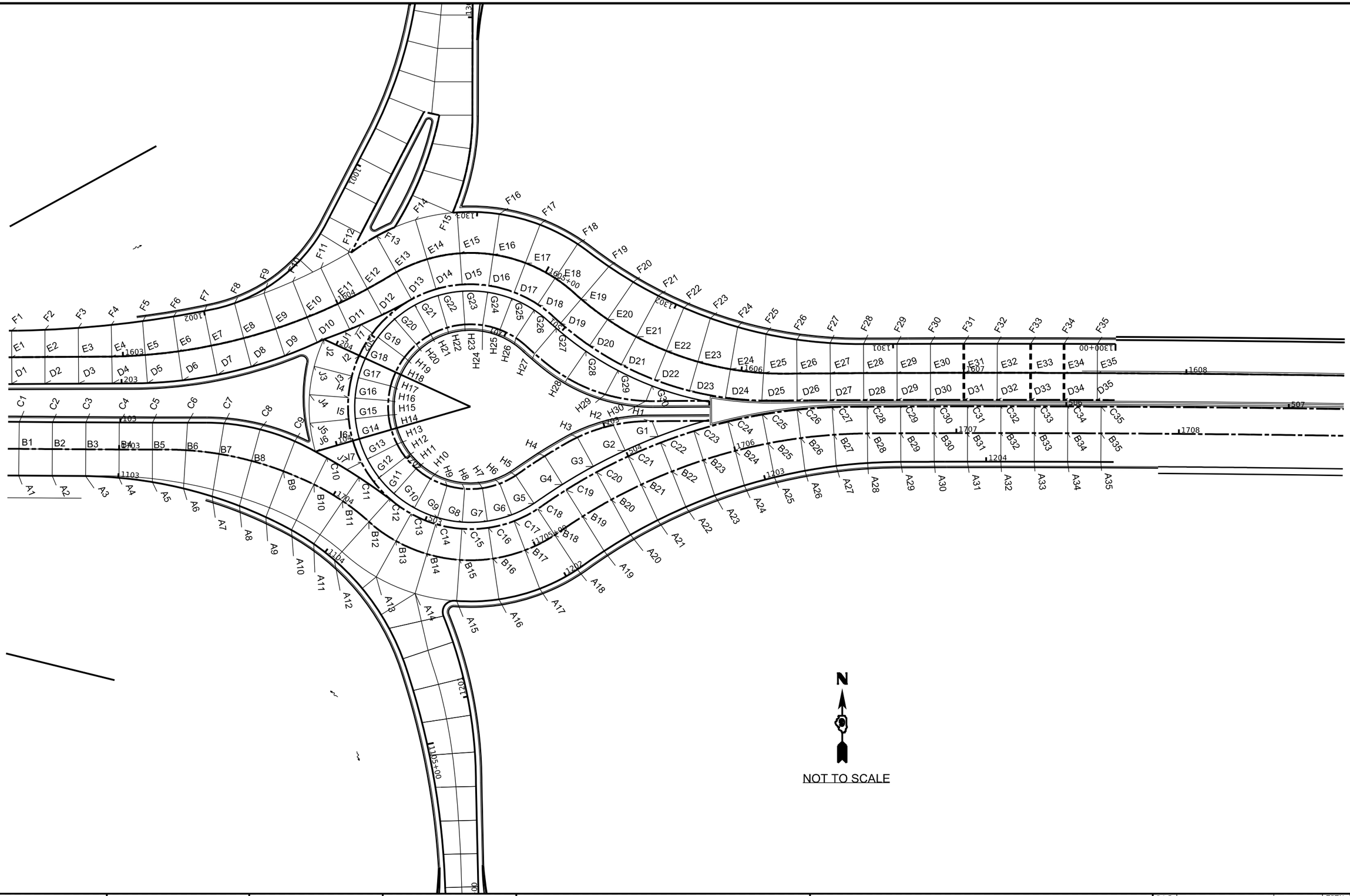

USER NAME = $USER$	DESIGNED -	REVISED -	
	DRAWN -	REVISED -	
PLOT SCALE = $SCALE$	CHECKED -	REVISED -	
PLOT DATE = $DATE$	DATE -	REVISED -	

STATE OF ILLINOIS
DEPARTMENT OF TRANSPORTATION

JOINTING DETAIL

SCALE: | SHEET OF SHEETS | STA. TO STA.

F.A.P. RTE.	SECTION	COUNTY	TOTAL SHEETS	SHEET NO.
873	(28-5) K-1	FRANKLIN	162	81
		CONTRACT NO.		
	ILLINOIS	FED. AID PROJECT		

MODEL: $MODELNAME$
FILE NAME: $FILE$

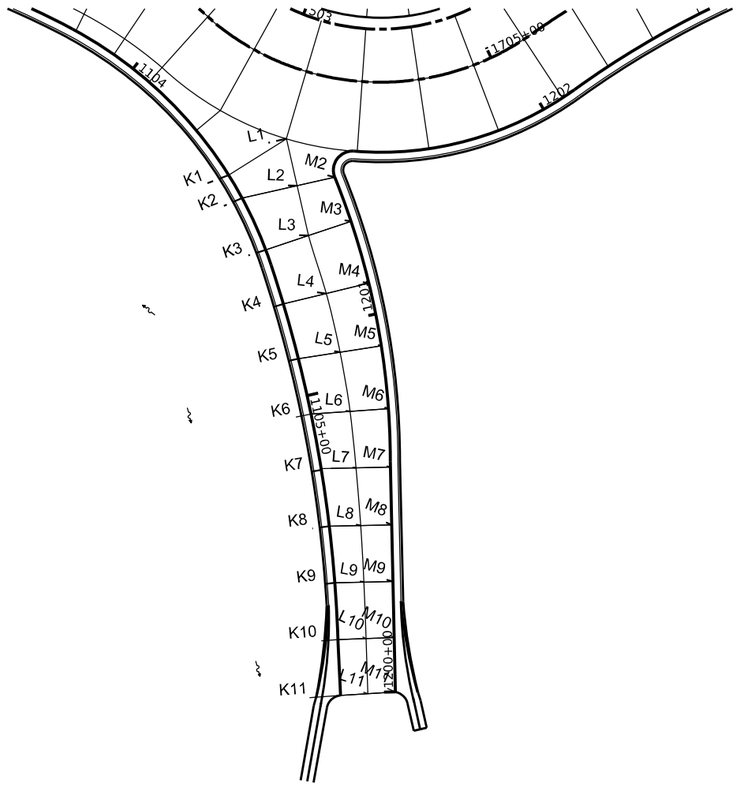

RAMP C

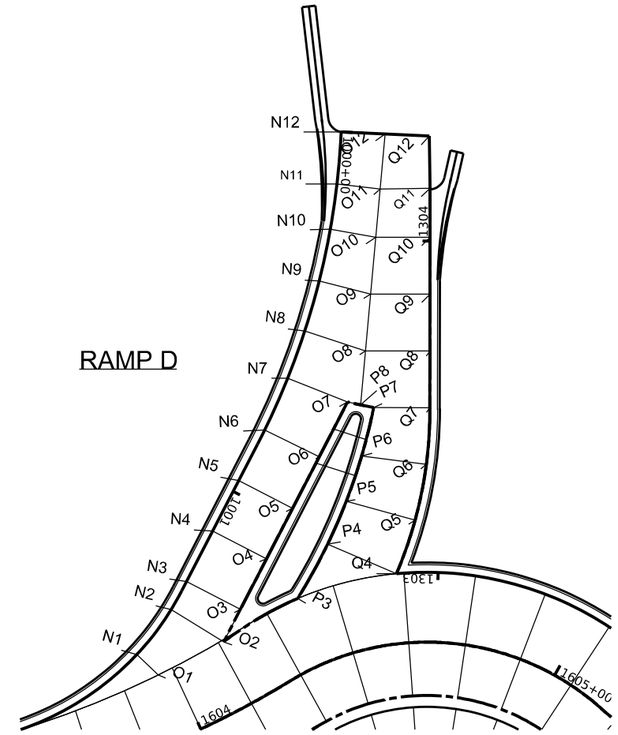

RAMP D

N

NOT TO SCALE

MODEL: $MODELNAME$
FILE NAME: $FILE$

USER NAME = $USER$	DESIGNED -	REVISED -	
	DRAWN -	REVISED -	
PLOT SCALE = $SCALE$	CHECKED -	REVISED -	
PLOT DATE = $DATE$	DATE -	REVISED -	

STATE OF ILLINOIS
DEPARTMENT OF TRANSPORTATION

JOINTING DETAIL

SCALE: | SHEET 0 OF SHEETS | STA. TO STA.

F.A.P. RTE.	SECTION	COUNTY	TOTAL SHEETS	SHEET NO.
873	(28-5) K-1	FRANKLIN	162	82
		CONTRACT NO.		
		ILLINOIS FED. AID PROJECT		

POINT NO.	STA.	OFFSET	ELEV.
A1	1102+55.28 (CL1100)	0	401.09
A2	1102+70.30 (CL1100)	0	401.08
A3	1102+85.32 (CL1100)	0	401.08
A4	1103+00.36 (CL1100)	0	401.06
A5	1103+15.51 (CL1100)	0	401.03
A6	1103+29.77 (CL1100)	0	400.99
A7	1103+43.10 (CL1100)	0	400.98
A8	1103+56.16 (CL1100)	0	401.02
A9	1103+69.03 (CL1100)	0	401.05
A10	1103+81.39 (CL1100)	0	401.08
A11	1103+93.70 (CL1100)	0	401.11
A12	1104+05.48 (CL1100)	0	401.15
A13	1104+23.5(CL1100)	8.2'L	401.25
A14	1104+38(CL1100)	18'L	401.25
A15	1201+48.83 (CL1201)	0	401.25
A16	1201+67.85 (CL1201)	0	401.19
A17	1201+86.87 (CL1201)	0	401.13
A18	1202+05.90 (CL1201)	0	401.11
A19	1202+20.49 (CL1201)	0	401.16
A20	1202+34.39 (CL1201)	0	401.20
A21	1202+48.30 (CL1201)	0	401.24
A22	1202+62.25 (CL1201)	0	401.28
A23	1202+76.22 (CL1201)	0	401.33
A24	1202+90.23 (CL1201)	0	401.37
A25	1203+04.28 (CL1201)	0	401.41
A26	1203+18.37 (CL1201)	0	401.38
A27	1203+32.50 (CL1201)	0	401.32
A28	1203+46.68 (CL1201)	0	401.26
A29	1203+61.57 (CL1201)	0	401.20
A30	1203+76.62 (CL1201)	0	401.14
A31	1203+91.60 (CL1201)	0	401.08
A32	1204+06.58 (CL1201)	0	401.02
A33	1204+21.56 (CL1201)	0	400.96
A34	1204+36.54 (CL1201)	0	400.91
A35	1204+51.53 (CL1201)	0	400.85

POINT NO.	EB2 STA.	OFFSET	ELEV.
B1	1702+55	0	401.27
B2	1702+70	0	401.26
B3	1702+85	0	401.26
B4	1703+00	0	401.26
B5	1703+15	0	401.25
B6	1703+30	0	401.25
B7	1703+45	0	401.27
B8	1703+60	0	401.32
B9	1703+75	0	401.38
B10	1703+90	0	401.43
B11	1704+05	0	401.50
B12	1704+20	0	401.56
B13	1704+35	0	401.55
B14	1704+50	0	401.53
B15	1704+65	0	401.50
B16	1704+80	0	401.51
B17	1704+95	0	401.52
B18	1705+10	0	401.54
B19	1705+25	0	401.56
B20	1705+40	0	401.57
B21	1705+55	0	401.59
B22	1705+70	0	401.60
B23	1705+85	0	401.62
B24	1706+00	0	401.63
B25	1706+15	0	401.65
B26	1706+30	0	401.61
B27	1706+45	0	401.56
B28	1706+60	0	401.51
B29	1706+75	0	401.46
B30	1706+90	0	401.41
B31	1707+05	0	401.36
B32	1707+20	0	401.30
B33	1707+35	0	401.23
B34	1707+50	0	401.15
B35	1707+65	0	401.06

POINT NO.	STA.	OFFSET	ELEV.
C1	102+54.56 (CL100)	0	401.46
C2	102+69.55 (CL100)	0	401.46
C3	102+84.53 (CL100)	0	401.45
C4	103+00.00 (CL100)	0	401.45
C5	103+14.50 (CL100)	0	401.45
C6	103+30.21 (CL100)	0	401.45
C7	103+46.60 (CL100)	0	401.47
C8	103+63.07 (CL100)	0	401.52
C9	103+79.56 (CL100)	0	401.58
C10	1703+90(EB2)	13.3'L	401.64
C11	17704+05(EB2)	13.0'L	401.72
C12	502+81.22 (CL500)	0	401.81
C13	502+93.03 (CL500)	0	401.83
C14	503+04.99 (CL500)	0	401.84
C15	503+16.94 (CL500)	0	401.85
C16	503+28.90 (CL500)	0	401.86
C17	503+40.86 (CL500)	0	401.88
C18	503+52.81 (CL500)	0	401.89
C19	503+68.12 (CL500)	0	401.90
C20	503+83.99 (CL500)	0	401.92
C21	503+99.84 (CL500)	0	401.93
C22	504+15.70 (CL500)	0	401.95
C23	504+31.54 (CL500)	0	401.97
C24	504+47.38 (CL500)	0	401.98
C25	504+63.20 (CL500)	0	402.00
C26	504+78.82 (CL500)	0	401.95
C27	504+94.78 (CL500)	0	401.89
C28	505+10.00 (CL500)	0	401.83
C29	505+25.57 (CL500)	0	401.77
C30	505+40.59 (CL500)	0	401.71
C31	505+55.61 (CL500)	0	401.64
C32	505+70.63 (CL500)	0	401.58
C33	505+85.64 (CL500)	0	401.52
C34	506+00.66 (CL500)	0	401.46
C35	506+15.68 (CL500)	0	401.40

POINT NO.	STA.	OFFSET	ELEV.
D1	202+50.69 (CL200)	0	401.13
D2	202+65.69 (CL200)	0	401.11
D3	202+80.69 (CL200)	0	401.09
D4	202+95.86 (CL200)	0	401.07
D5	203+11.61 (CL200)	0	401.05
D6	203+27.39 (CL200)	0	401.05
D7	203+43.20 (CL200)	0	401.05
D8	203+59.00 (CL200)	0	401.05
D9	203+74.79 (CL200)	0	401.05
D10	203+90.56 (CL200)	0	401.05
D11	1604+00(WB3)	12.6'R	401.13
D12	1604+15(WB3)	13.5'R	401.23
D13	501+75.69 (CL500)	0	401.32
D14	501+63.73 (CL500)	0	401.36
D15	501+51.78 (CL500)	0	401.39
D16	501+39.84 (CL500)	0	401.42
D17	501+27.91 (CL500)	0	401.46
D18	501+15.98 (CL500)	0	401.49
D19	501+02.74 (CL500)	0	401.53
D20	500+86.21 (CL500)	0	401.58
D21	500+69.68 (CL500)	0	401.62
D22	500+53.16 (CL500)	0	401.67
D23	500+36.68 (CL500)	0	401.72
D24	500+20.24 (CL500)	0	401.76
D25	500+03.87 (CL500)	0	401.81
D26	1+42.68 (PrBL43)	0	401.78
D27	1+27.70 (PrBL43)	0	401.74
D28	1+12.72 (PrBL43)	0	401.69
D29	0+97.74 (PrBL43)	0	401.65
D30	0+82.75 (PrBL43)	0	401.60
D31	0+67.76 (PrBL43)	0	401.56
D32	0+52.79 (PrBL43)	0	401.51
D33	0+37.80 (PrBL43)	0	401.47
D34	0+22.82 (PrBL43)	0	401.42
D35	0+07.84 (PrBL43)	0	401.37

POINT NO.	WB3 STA.	OFFSET	ELEV.
E1	1602+50	0	400.94
E2	1602+65	0	400.88
E3	1602+80	0	400.90
E4	1602+95	0	400.88
E5	1603+10	0	400.87
E6	1603+25	0	400.86
E7	1603+40	0	400.85
E8	1603+55	0	400.85
E9	1603+70	0	400.86
E10	1603+85	0	400.87
E11	1604+00	0	400.94
E12	1604+15	0	401.02
E13	1604+30	0	401.10
E14	1604+45	0	401.14
E15	1604+60	0	401.17
E16	1604+75	0	401.21
E17	1604+90	0	401.24
E18	1605+05	0	401.28
E19	1605+20	0	401.31
E20	1605+35	0	401.36
E21	1605+50	0	401.40
E22	1605+65	0	401.45
E23	1605+80	0	401.49
E24	1605+95	0	401.54
E25	1606+10	0	401.59
E26	1606+25	0	401.60
E27	1606+40	0	401.61
E28	1606+55	0	401.61
E29	1606+70	0	401.61
E30	1606+85	0	401.61
E31	1607+00	0	401.62
E32	1607+15	0	401.62
E33	1607+30	0	401.62
E34	1607+45	0	401.63
E35	1607+60	0	401.63

POINT NO.	STA.	OFFSET	ELEV.
F1	1002+87.02 (CL1002)	0	400.66
F2	1002+72.01 (CL1002)	0	400.63
F3	1002+56.99 (CL1002)	0	400.61
F4	1002+42.13 (CL1002)	0	400.59
F5	1002+27.98 (CL1002)	0	400.57
F6	1002+13.90 (CL1002)	0	400.59
F7	1001+99.86 (CL1002)	0	400.60
F8	1001+85.80 (CL1002)	0	400.60
F9	1603+70(WB3)	16.7'L	400.61
F10	1603+85(WB3)	17.3'L	400.60
F11	1604+00(WB3)	17.8'L	400.67
F12	1604+15(WB3)	18.2'L	400.75
F13	1604+30(WB3)	18.5'L	400.83
F14	1604+45(WB3)	18.5'L	400.95
F15	1303+09.06 (CL1300)	0	400.75
F16	1302+90.05 (CL1300)	0	400.83
F17	1302+71.05 (CL1300)	0	400.91
F18	1302+52.06 (CL1300)	0	400.99
F19	1302+34.73 (CL1300)	0	401.06
F20	1302+21.80 (CL1300)	0	401.10
F21	1302+09.01 (CL1300)	0	401.15
F22	1301+96.25 (CL1300)	0	401.19
F23	1301+83.45 (CL1300)	0	401.24
F24	1301+70.53 (CL1300)	0	401.28
F25	1301+57.40 (CL1300)	0	401.33
F26	1301+43.42 (CL1300)	0	401.37
F27	1301+28.30 (CL1300)	0	401.44
F28	1301+13.26 (CL1300)	0	401.51
F29	1300+98.25 (CL1300)	0	401.57
F30	1300+83.23 (CL1300)	0	401.63
F31	1300+68.20 (CL1300)	0	401.69
F32	1300+53.19 (CL1300)	0	401.75
F33	1300+38.17 (CL1300)	0	401.80
F34	1300+23.15 (CL1300)	0	401.86
F35	1300+08.13 (CL1300)	0	401.87

POINT NO.	CL500 STA.	OFFSET	ELEV.
G1	504+15.67	3'	402.21
G2	503+99.8	3'	402.21
G3	503+83.9	3'	402.21
G4	503+68.1	3'	402.22
G5	503+52.8	3'	402.22
G6	503+40.8	3'	402.22
G7	503+28.9	3'	402.22
G8	503+16.9	3'	402.23
G9	503+05	3'	402.23
G10	502+93	3'	402.23
G11	502+81.2	3'	402.23
G12	502+70.8	3'	402.25
G13	502+60.4	3'	402.23
G14	502+50	3'	402.24
G15	502+40.1	3'	402.10
G16	502+30.3	3'	401.96
G17	502+20.5	3'	401.81
G18	502+10.7	3'	401.67
G19	501+99	3'	401.71
G20	501+87.3	3'	401.74
G21	501+75.7	3'	401.77
G22	501+63.7	3'	401.81
G23	501+51.7	3'	401.84
G24	501+39.8	3'	401.87
G25	501+27.9	3'	401.91
G26	501+15.9	3'	401.94
G27	501+02.7	3'	401.98
G28	500+86	3'	402.03
G29	500+69.7	3'	402.07
G30	500+53.2	3'	402.12

POINT NO.	CL700 STA.	OFFSET	ELEV.
H1	703+21.57	0	401.91
H2	703+05	0	402.00
H3	702+87	0	402.03
H4	702+70.03	0	402.04
H5	702+54.32	0	402.04
H6	702+46.67	0	402.04
H7	702+38.24	0	402.04
H8	702+30.19	0	402.05
H9	702+22.15	0	402.05
H10	702+14.11	0	402.05
H11	702+06.16	0	402.05
H12	701+99.14	0	402.05
H13	701+92.13	0	402.06
H14	701+85.12	0	402.06
H15	701+78.52	0	401.92
H16	701+71.93	0	401.78
H17	701+65.35	0	401.63
H18	701+58.76	0	401.49
H19	701+50.87	0	401.52
H20	701+43.02	0	401.55
H21	701+35.16	0	401.58
H22	701+27.12	0	401.61
H23	701+19.08	0	401.64
H24	701+11.05	0	401.67
H25	701+03.02	0	401.70
H26	700+95	0	401.73
H27	700+83.98	0	401.76
H28	700+65.52	0	401.79
H29	700+47.02	0	401.80
H30	700+28.37	0	401.77

POINT NO.	CL500 STA.	OFFSET	ELEV.
I1	501+99.03	0	401.26
I2	502+10.76	0	401.22
I3	502+20.55	0	401.36
I4	502+30.34	0	401.51
I5	502+40.13	0	401.65
I6	502+45.95	0	401.79
I7	502+60.37	0	401.78

POINT NO.	CL500 STA.	OFFSET	ELEV.
J1	501+99	6.5'R	401.06
J2	502+10.7	17.5'R	401.04
J3	502+20.5	17.5'R	401.18
J4	502+30.5	17.5'R	401.33
J5	502+40.5	17.5'R	401.47
J6	502+50	17.5'R	401.61
J7	502+60	7.3'R	401.69

POINT NO.	CL1100 STA.	OFFSET	ELEV.
K1	1104+30.00	0	400.84
K2	1104+45.00	0	400.76
K3	1104+60.00	0	400.60
K4	1104+75.00	0	400.44
K5	1104+90.00	0	400.29
K6	1105+05.00	0	400.13
K7	1105+20.00	0	399.92
K8	1105+35.00	0	399.66
K9	1105+50.00	0	399.40
K10	1105+65.00	0	399.14
K11	1105+79.77	0	398.96

POINT NO.	CL1100 STA.	OFFSET	ELEV.
L1	1104+38	18'L	401.25
L2	1104+48.5	14.5'L	401.04
L3	1104+60	11.9'L	400.85
L4	1104+75.5	11.6'L	400.67
L5	1104+91	11.0'L	400.43
L6	1105+06	10.2'L	400.19
L7	1105+21	9.1'L	399.93
L8	1105+35.7	8.2'L	399.64
L9	1105+50.5	7.6'L	399.28
L10	1105+65	7.5'L	398.9
L11	1105+79.5	7.2'L	398.6

POINT NO.	CL1201 STA.	OFFSET	ELEV.
M2	1201+37.76	0	401.23
M3	1201+25.36	0	401.10
M4	1201+08.37	0	400.90
M5	1200+91.49	0	400.58
M6	1200+74.81	0	400.25
M7	1200+59.36	0	399.95
M8	1200+44.12	0	399.62
M9	1200+29.17	0	399.17
M10	1200+14.33	0	398.73
M11	1200+00.00	0	398.30

POINT NO.	CL1002 STA.	OFFSET	ELEV.
N1	1001+50.22	0	400.43
N2	1001+35.22	0	400.37
N3	1001+26.80	0	400.33
N4	1001+11.80	0	400.26
N5	1000+96.80	0	400.19
N6	1000+81.80	0	400.13
N7	1000+66.80	0	400.06
N8	1000+53.59	0	400.00
N9	1000+40	0	399.94
N10	1000+25.83	0	399.87
N11	1000+13.81	0	399.82
N12	1000+00	0	399.76

POINT NO.	CL1000 STA.	OFFSET	ELEV.
O1	1001+50.5	7.8'L	400.65
O2	1001+35.5	16.2'L	400.84
O3	1001+26.8	16.0'L	400.76
O4	1001+11.8	16.0'L	400.64
O5	1000+96.8	16.0'L	400.52
O6	1000+81.8	16.0'L	400.4
O7	1000+66.8	17.0'L	400.28
O8	1000+53.5	17.0'L	400.19
O9	1000+39.8	14.0'L	400.06
O10	1000+25.8	12.2'L	399.93
O11	1000+13.8	11.5'L	399.82
O12	1000+00	11.5'L	399.69

POINT NO.	CL1300 STA.	OFFSET	ELEV.
P3	1303+11.01	26.9'L	400.94
P4	1303+11.02	19.7'L	400.75
P5	1303+26	18.8'L	400.61
P6	1303+41	17.2'L	400.47
P7	1303+56	14.9'L	400.33
P8	1303+56.75	18.3'L	400.31

POINT NO.	STA.	OFFSET	ELEV.
Q4	1303+11.01 (CL1300)	0	401.06
Q5	1303+26 (CL1300)	0	400.84
Q6	1303+41 (CL1300)	0	400.63
Q7	1303+56.02 (CL1300)	0	400.42
Q8	1303+71 (CL1300)	0	400.20
Q9	1303+86 (CL1300)	0	399.99
Q10	1304+01 (CL1300)	0	399.78
Q11	0+00.28 (PrBL61)	0	399.59
Q12	0+14.06 (PrBL61)	0	399.35

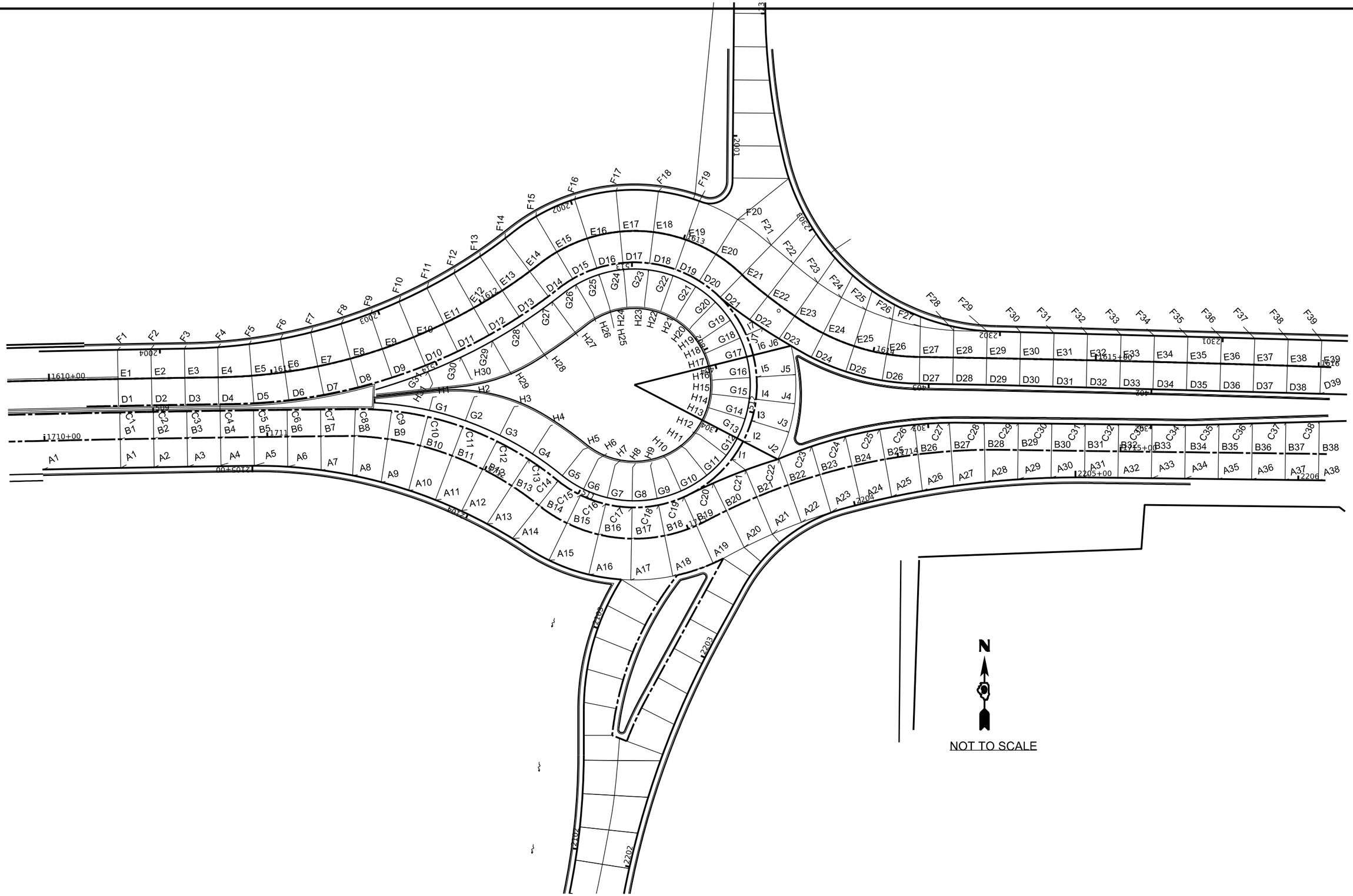

USER NAME = $USER$	DESIGNED -	REVISED -	
	DRAWN -	REVISED -	
PLOT SCALE = $SCALE$	CHECKED -	REVISED -	
PLOT DATE = $DATE$	DATE -	REVISED -	

STATE OF ILLINOIS
DEPARTMENT OF TRANSPORTATION

JOINTING DETAIL

SCALE: | SHEET OF SHEETS | STA. TO STA.

F.A.P. RTE.	SECTION	COUNTY	TOTAL SHEETS	SHEET NO.
873	(28-5) K-1	FRANKLIN	162	86
		CONTRACT NO.		
	ILLINOIS	FED. AID PROJECT		

MODEL: $MODELNAME$
FILE NAME: $FILE$

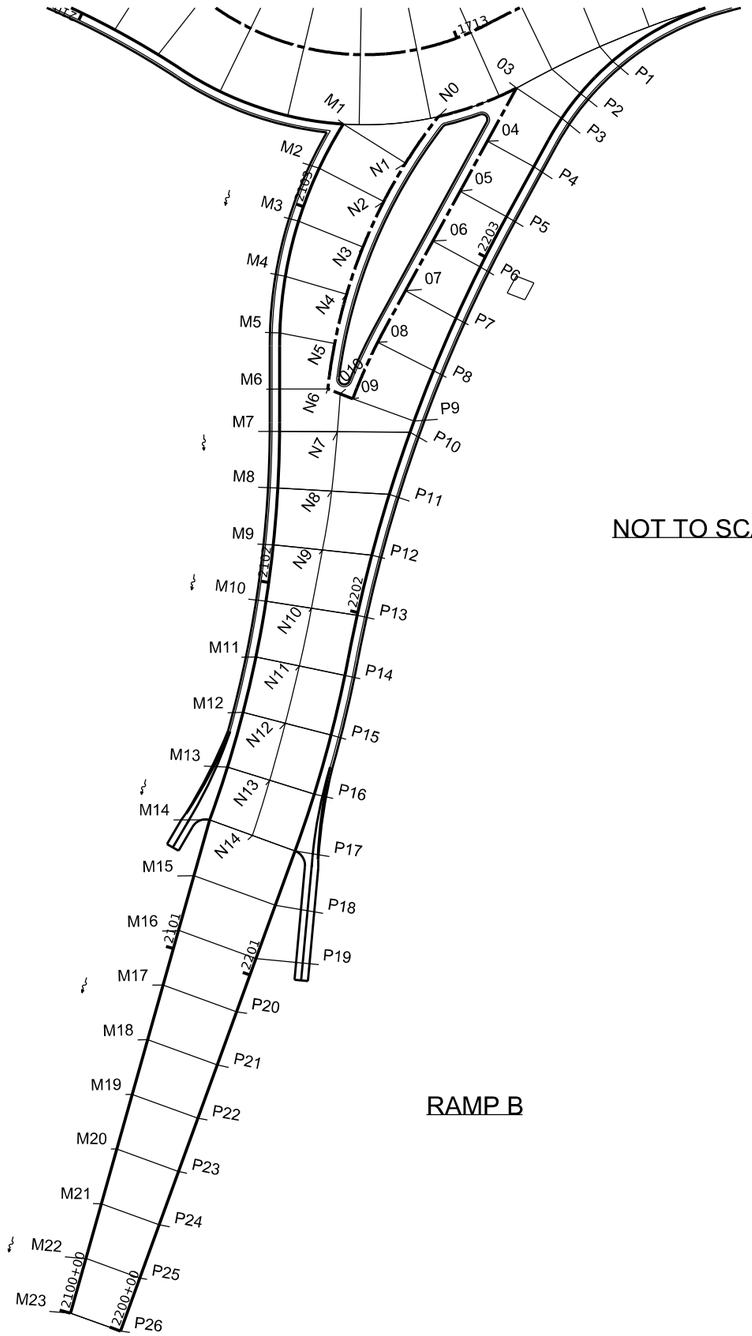

NOT TO SCALE

RAMP B

N

NOT TO SCALE

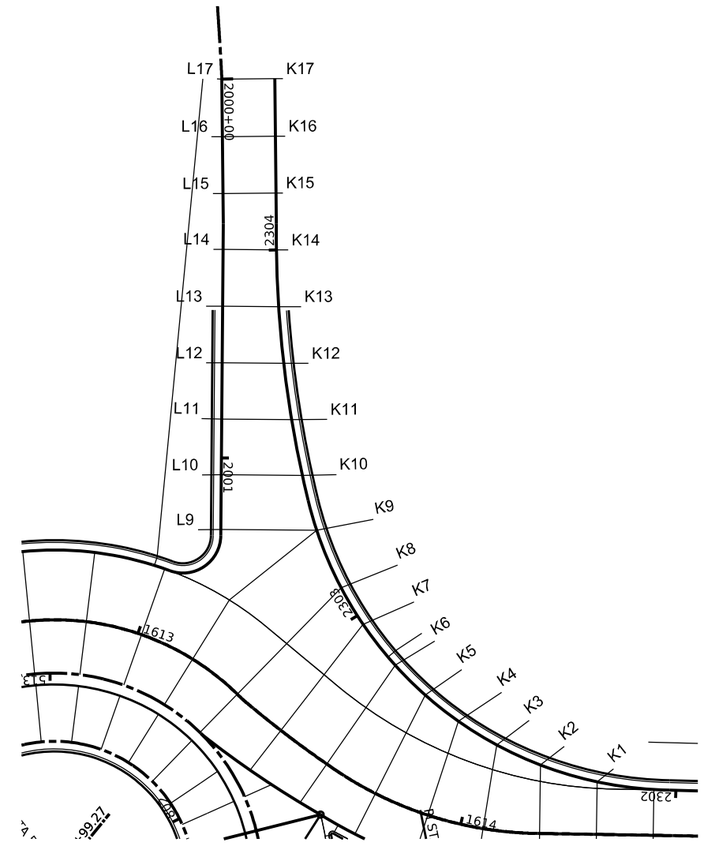

RAMP A

MODEL: $MODELNAME$
FILE NAME: $FILEL$

USER NAME = $USER$	DESIGNED -	REVISED -	
	DRAWN -	REVISED -	
PLOT SCALE = $SCALE$	CHECKED -	REVISED -	
PLOT DATE = $DATE$	DATE -	REVISED -	

STATE OF ILLINOIS
DEPARTMENT OF TRANSPORTATION

JOINTING DETAIL

SCALE: | SHEET OF SHEETS | STA. TO STA.

F.A.P. RTE.	SECTION	COUNTY	TOTAL SHEETS	SHEET NO.
873	(28-5) K-1	FRANKLIN	162	87
		CONTRACT NO.		
		ILLINOIS	FED. AID PROJECT	

POINT NO.	STA.	OFFSET	ELEV.
A1	2105+59.01 (CL2100)	0	398.77
A2	2105+44.03 (CL2100)	0	398.59
A3	2105+29.05 (CL2100)	0	398.42
A4	2105+14.06 (CL2100)	0	398.25
A5	2104+99.08 (CL2100)	0	398.07
A6	2104+84.08 (CL2100)	0	397.88
A7	2104+69.01 (CL2100)	0	397.68
A8	2104+54.64 (CL2100)	0	397.45
A9	2104+41.52 (CL2100)	0	397.24
A10	2104+28.63 (CL2100)	0	397.06
A11	2104+15.87 (CL2100)	0	396.86
A12	2104+03.14 (CL2100)	0	396.69
A13	2103+90.34 (CL2100)	0	396.51
A14	2103+77.18 (CL2100)	0	396.35
A15	2103+58.12 (CL2100)	0	396.18
A16	2103+39.10 (CL2100)	0	396.00
A17	1712+74(EB2)	18.5'R	395.81
A18	1712+89(EB2)	18.5'R	395.61
A19	1713+04(EB2)	18.5'R	395.42
A20	1713+19(EB2)	18.3'R	395.26
A21	1713+34(EB2)	18.0'R	395.11
A22	1713+49(EB2)	17.8'R	394.94
A23	2203+88.80 (CL2205)	0	394.78
A24	2204+02.85 (CL2205)	0	394.61
A25	2204+16.91 (CL2205)	0	394.44
A26	2204+31.00 (CL2205)	0	394.28
A27	2204+45.15 (CL2205)	0	394.12
A28	2204+59.37 (CL2205)	0	394.01
A29	2204+74.06 (CL2205)	0	393.93
A30	2204+89.09 (CL2205)	0	393.84
A31	2205+04.10 (CL2205)	0	393.76
A32	2205+19.10 (CL2205)	0	393.68
A33	2205+34.10 (CL2205)	0	393.59
A34	2205+49.10 (CL2205)	0	393.51
A35	2205+64.10 (CL2205)	0	393.43
A36	2205+79.10 (CL2205)	0	393.36
A37	2205+94.10 (CL2205)	0	393.30
A38	2206+09.10 (CL2205)	0	393.23

POINT NO.	EB2 STA.	OFFSET	ELEV.
B1	1710+34	0	399.02
B2	1710+49	0	398.85
B3	1710+64	0	398.68
B4	1710+79	0	398.50
B5	1710+94	0	398.33
B6	1711+09	0	398.16
B7	1711+24	0	397.98
B8	1711+39	0	397.81
B9	1711+54	0	397.63
B10	1711+69	0	397.46
B11	1711+84	0	397.29
B12	1711+99	0	397.11
B13	1712+14	0	396.92
B14	1712+29	0	396.73
B15	1712+44	0	396.55
B16	1712+59	0	396.37
B17	1712+74	0	396.19
B18	1712+89	0	396.01
B19	1713+04	0	395.83
B20	1713+19	0	395.65
B21	1713+34	0	395.48
B22	1713+49	0	395.30
B23	1713+64	0	395.12
B24	1713+79	0	394.95
B25	1713+94	0	394.77
B26	1714+09	0	394.60
B27	1714+24	0	394.42
B28	1714+39	0	394.31
B29	1714+54	0	394.21
B30	1714+69	0	394.12
B31	1714+84	0	394.03
B32	1714+99	0	393.94
B33	1715+14	0	393.85
B34	1715+29	0	393.76
B35	1715+44	0	393.67
B36	1715+59	0	393.58
B37	1715+74	0	393.49
B38	1715+89	0	393.40

POINT NO.	STA.	OFFSET	ELEV.
C1	508+84.99 (CL500)	0	399.29
C2	509+00 (CL500)	0	399.12
C3	509+15.03 (CL500)	0	398.95
C4	509+30 (CL500)	0	398.78
C5	509+45.07 (CL500)	0	398.60
C6	509+60.08 (CL500)	0	398.43
C7	509+75.10 (CL500)	0	398.26
C8	509+90.69 (CL500)	0	398.08
C9	510+07.04 (CL500)	0	397.90
C10	510+23.45 (CL500)	0	397.71
C11	510+39.91 (CL500)	0	397.52
C12	510+56.40 (CL500)	0	397.34
C13	511+72.91 (CL500)	0	397.16
C14	510+89.26 (CL500)	0	396.98
C15	511+01.22 (CL500)	0	396.83
C16	511+13.18 (CL500)	0	396.65
C17	511+25.13 (CL500)	0	396.47
C18	511+37.09 (CL500)	0	396.29
C19	511+49.05 (CL500)	0	396.11
C20	1713+19(EB2)	13.7'L	395.89
C21	1713+34(EB2)	13.0'L	395.67
C22	303+69.67 (CL300)	0	395.45
C23	303+53.40 (CL300)	0	395.29
C24	303+37.66 (CL300)	0	395.14
C25	303+21.91 (CL300)	0	394.98
C26	303+06.17 (CL300)	0	394.83
C27	302+90.44 (CL300)	0	394.67
C28	302+74.75 (CL300)	0	394.56
C29	302+59.43 (CL300)	0	394.46
C30	302+44.43 (CL300)	0	394.37
C31	302+29.43 (CL300)	0	394.28
C32	302+14.43 (CL300)	0	394.18
C33	301+99.43 (CL300)	0	394.09
C34	301+84.43 (CL300)	0	394.00
C35	301+69.42 (CL300)	0	393.91
C36	301+54.41 (CL300)	0	393.82
C37	301+39.40 (CL300)	0	393.72
C38	301+24.39 (CL300)	0	393.63

MODEL: $MODELNAME$
FILE NAME: $FILEL$

USER NAME = $USER$	DESIGNED -	REVISED -
	DRAWN -	REVISED -
PLOT SCALE = $SCALE$	CHECKED -	REVISED -
PLOT DATE = $DATE$	DATE -	REVISED -

STATE OF ILLINOIS
DEPARTMENT OF TRANSPORTATION

EAST ELEVATIONS

SCALE: | SHEET OF SHEETS | STA. TO STA.

F.A.P. RTE.	SECTION	COUNTY	TOTAL SHEETS	SHEET NO.
873	(28-5) K-1	FRANKLIN	162	88

CONTRACT NO. 78814

ILLINOIS FED. AID PROJECT

POINT NO.	STA.	OFFSET	ELEV.
D1	0+50.87 (PrBL44)	0	399.33
D2	0+35.89 (PrBL44)	0	399.13
D3	0+20.91 (PrBL44)	0	398.93
D4	0+05.92 (PrBL44)	0	398.74
D5	514+84.01 (CL500)	0	398.63
D6	514+68.22 (CL500)	0	398.59
D7	514+52.41 (CL500)	0	398.54
D8	514+36.58 (CL500)	0	398.50
D9	514+20.74 (CL500)	0	398.46
D10	514+04.88 (CL500)	0	398.41
D11	513+89.01 (CL500)	0	398.29
D12	513+73.14 (CL500)	0	398.13
D13	513+57.26 (CL500)	0	397.97
D14	513+41.39 (CL500)	0	397.82
D15	513+27.93 (CL500)	0	397.68
D16	513+15.97 (CL500)	0	397.56
D17	513+04.03 (CL500)	0	397.44
D18	512+90.09 (CL500)	0	397.32
D19	512+80 (CL500)	0	397.20
D20	512+68.22 (CL500)	0	397.08
D21	512+56.30 (CL500)	0	396.97
D22	1613+46(WB3)	13.2'R	396.63
D23	1613+61(WB3)	12.4'R	396.31
D24	403+54.61 (CL400)	0	396.04
D25	403+37.77 (CL400)	0	395.83
D26	403+20.93 (CL400)	0	395.59
D27	403+04.16 (CL400)	0	395.35
D28	402+89.17 (CL400)	0	395.23
D29	402+74.19 (CL400)	0	395.11
D30	402+59.21 (CL400)	0	395.00
D31	402+44.23 (CL400)	0	394.88
D32	402+29.24 (CL400)	0	394.76
D33	402+14.26 (CL400)	0	394.65
D34	401+99.28 (CL400)	0	394.53
D35	401+84.30 (CL400)	0	394.41
D36	401+69.32 (CL400)	0	394.30
D37	401+54.33 (CL400)	0	394.18
D38	401+39.35 (CL400)	0	394.06
D39	401+24.37 (CL400)	0	393.95

POINT NO.	WB3 STA.	OFFSET	ELEV.
E1	1610+31	0	399.57
E2	1610+46	0	399.32
E3	1610+61	0	399.07
E4	1610+76	0	398.83
E5	1610+91	0	398.69
E6	1611+06	0	398.56
E7	1611+21	0	398.46
E8	1611+36	0	398.36
E9	1611+51	0	398.25
E10	1611+66	0	398.15
E11	1611+81	0	398.02
E12	1611+96	0	397.88
E13	1612+11	0	397.74
E14	1612+26	0	397.60
E15	1612+41	0	397.47
E16	1612+56	0	397.35
E17	1612+71	0	297.23
E18	1612+86	0	397.11
E19	1613+01	0	396.99
E20	1613+16	0	396.87
E21	1613+31	0	396.73
E22	1613+46	0	396.44
E23	1613+61	0	396.16
E24	1613+76	0	395.90
E25	1613+91	0	395.66
E26	1614+06	0	395.42
E27	1614+21	0	395.19
E28	1614+36	0	395.07
E29	1614+51	0	394.95
E30	1614+66	0	394.83
E31	1614+81	0	394.71
E32	1614+96	0	394.59
E33	1615+11	0	394.48
E34	1615+26	0	394.36
E35	1615+41	0	394.24
E36	1615+56	0	394.12
E37	1615+71	0	394.00
E38	1615+86	0	393.88
E39	1616+01	0	393.81

POINT NO.	STA.	OFFSET	ELEV.
F1	2004+19.03 (CL2000)	0	399.81
F2	2004+04.01 (CL2000)	0	399.51
F3	2003+88.99 (CL2000)	0	399.21
F4	2003+73.97 (CL2000)	0	398.92
F5	2003+59.82 (CL2000)	0	398.73
F6	2003+45.71 (CL2000)	0	398.54
F7	2003+31.65 (CL2000)	0	398.35
F8	2003+17.63 (CL2000)	0	398.20
F9	2003+03.65 (CL2000)	0	398.05
F10	2002+89.70 (CL2000)	0	397.90
F11	2002+75.78 (CL2000)	0	397.76
F12	2002+61.89 (CL2000)	0	397.61
F13	2002+48.02 (CL2000)	0	397.47
F14	2002+34.17 (CL2000)	0	397.32
F15	2002+17.12 (CL2000)	0	397.20
F16	2001+98.11 (CL2000)	0	397.08
F17	2001+79.09 (CL2000)	0	396.96
F18	2001+60.09 (CL2000)	0	396.84
F19	2001+41.09 (CL2000)	0	396.72
F20	1613+16(WB3)	18.3'L	396.59
F21	1613+31(WB3)	18.6'L	396.44
F22	1613+46(WB3)	18.6'L	396.17
F23	1613+61(WB3)	18.1'L	395.87
F24	1613+76(WB3)	18.0'L	395.63
F25	1613+91(WB3)	17.1'L	395.40
F26	1614+06(WB3)	15.7'L	395.19
F27	1614+21(WB3)	13.7'L	394.98
F28	1614+36(WB3)	12.1'L	394.87
F29	2302+05.77 (CL2300)	0	394.77
F30	2301+90.76 (CL2300)	0	394.65
F31	2301+75.74 (CL2300)	0	394.53
F32	2301+60.72 (CL2300)	0	394.41
F33	2301+45.71 (CL2300)	0	394.30
F34	2301+30.69 (CL2300)	0	394.18
F35	2301+15.67 (CL2300)	0	394.06
F36	2301+00.66 (CL2300)	0	393.94
F37	2300+85.64 (CL2300)	0	393.82
F38	2300+70.62 (CL2300)	0	393.70
F39	2300+55.60 (CL2300)	0	393.59

POINT NO.	CL500 STA.	OFFSET	ELEV.
G1	510+23.45 (CL500)	3'	398.16
G2	510+39.91 (CL500)	3'	397.97
G3	510+56.40 (CL500)	3'	397.79
G4	511+72.91 (CL500)	3'	397.61
G5	510+89.26 (CL500)	3'	397.43
G6	511+01.22 (CL500)	3'	397.28
G7	511+13.18 (CL500)	3'	397.10
G8	511+25.13 (CL500)	3'	396.92
G9	511+37.09 (CL500)	3'	396.74
G10	511+49.05 (CL500)	3'	396.56
G11	511+76.7(CL500)	3'	396.25
G12	511+76.65(CL500)	3'	396.259
G13	511+86.22(CL500)	3'	396.162
G14	511+96.16(CL500)	3'	396.343
G15	512+06.10(CL500)	3'	396.524
G16	512+16.04(CL500)	3'	396.705
G17	512+26.01(CL500)	3'	396.924
G18	512+35.54(CL500)	3'	397.059
G19	512+35.5(CL500)	3'	397.06
G20	512+56.30 (CL500)	3'	397.42
G21	512+68.22 (CL500)	3'	397.53
G22	512+80 (CL500)	3'	397.65
G23	512+90.09 (CL500)	3'	397.77
G24	513+04.03 (CL500)	3'	397.89
G25	513+15.97 (CL500)	3'	398.01
G26	513+27.93 (CL500)	3'	398.13
G27	513+41.39 (CL500)	3'	398.27
G28	513+57.26 (CL500)	3'	398.42
G29	513+73.14 (CL500)	3'	398.58
G30	512+89.01 (CL500)	3'	398.74
G31	514+04.88 (CL500)	3'	398.86

POINT NO.	CL800 STA.	OFFSET	ELEV.
H1	800+26.15	0	398.08
H2	800+44.80	0	397.92
H3	800+60.30	0	397.77
H4	800+81.75	0	397.61
H5	800+99.99	0	397.46
H6	801+07.93	0	397.28
H7	801+15.97	0	397.11
H8	801+24.02	0	396.93
H9	801+32.06	0	396.76
H10	801+40.00	0	396.59
H11	801+49.72	0	396.42
H12	801+58.67	0	396.29
H13	801+65.11	0	395.94
H14	801+71.80	0	396.40
H15	801+78.48	0	396.58
H16	801+85.17	0	396.75
H17	801+91.88	0	396.93
H18	801+98.29	0	397.10
H19	802+04.71	0	397.27
H20	802+12.24	0	397.45
H21	802+20.25	0	397.56
H22	802+28.27	0	397.68
H23	802+36.29	0	397.80
H24	802+44.32	0	397.92
H25	802+52.35	0	398.04
H26	802+60.39	0	398.16
H27	802+71.87	0	398.30
H28	802+88.87	0	398.46
H29	803+05.89	0	398.60
H30	803+23.13	0	398.72
H31	803+40.51	0	398.62

POINT NO.	CL500 STA.	OFFSET	ELEV.
I1	511+76.65	0	395.81
I2	511+86.22	0	395.71
I3	511+96.16	0	395.89
I4	512+06.10	0	396.07
I5	512+16.04	0	396.26
I6	512+26.01	0	396.47
I7	512+35.54	0	396.61

POINT NO.		OFFSET	ELEV.
J2	511+86.22	17.5'R	395.45
J3	511+96.16	17.5'R	395.63
J4	512+06.10	17.5'R	395.81
J5	512+16.04	17.5'R	395.99
J6	512+26.01	17.5'R	396.17
J7	512+35.54	7.8'R	396.49

POINT NO.	CL2300 STA.	OFFSET	ELEV.
K1	2302+20.92	0	394.84
K2	2302+34.54	0	394.93
K3	2302+49.28	0	395.14
K4	2302+61.15	0	395.33
K5	2302+72.35	0	395.51
K6	2302+83.51	0	395.69
K7	2302+97.24	0	395.91
K8	2303+08.51	0	396.04
K9	2303+25.00	0	396.20
K10	2303+40.00	0	396.35
K11	2303+54.99	0	396.49
K12	2303+70.00	0	396.64
K13	2303+85.00	0	396.79
K14	2304+00.00	0	396.94
K15	2304+15.00	0	397.08
K16	2304+30.00	0	397.23
K17	2304+45.22	0	397.38

POINT NO.	CL2000 STA.	OFFSET	ELEV.
L9	2001+18.91	0	396.74
L10	2001+04.43	0	396.77
L11	2000+89.73	0	396.79
L12	2000+74.89	0	396.81
L13	2000+59.97	0	396.84
L14	2000+44.99	0	396.86
L15	2000+30.22	0	396.89
L16	2000+15.22	0	396.91
L17	2000+00.00	0	396.94

POINT NO.	CL2100 STA.	OFFSET	ELEV.
M1	2103+24.27	0	395.86
M2	2103+11.00	0	395.59
M3	2102+95.99	0	395.28
M4	2102+81.00	0	394.98
M5	2102+65.99	0	394.67
M6	2102+51.17	0	394.37
M7	2102+40.00	0	394.14
M8	2102+25.00	0	393.84
M9	2102+10.00	0	393.53
M10	2101+95.00	0	393.24
M11	2101+80.00	0	392.92
M12	2101+65.00	0	392.63
M13	2101+50.00	0	392.32
M14	2101+35.23	0	392.01
M15	2101+20.00	0	391.71
M16	2101+05.00	0	391.41
M17	2100+90.00	0	391.10
M18	2100+75.00	0	390.79
M19	2100+60.00	0	390.49
M20	2100+45.00	0	390.18
M21	2100+30.00	0	389.87
M22	2100+15.00	0	389.57
M23	2100+00.00	0	389.26

POINT NO.	CL2100 STA.	OFFSET	ELEV.
N1	2103+24.30	19.4'R	395.46
N2	2103+10.20	19.2'R	395.23
N3	2102+94.30	18.3'R	394.98
N4	2102+78.60	16.7'R	394.76
N5	2102+63.30	14.5'R	394.47
N6	2102+51.20	12.7'R	394.24
N7	2102+40	15.3'R	393.97
N8	2102+25	14.3'R	393.64
N9	2102+10	13.0'R	393.33
N10	2101+95	12.2'R	393.03
N11	2101+80	11.7'R	392.74
N12	2101+65	11.5'R	392.44
N13	2101+50	11.7'R	392.14
N14	2101+34.5	12.0'R	391.84

POINT NO.	CL2200 STA.	OFFSET	ELEV.
O3	2203+41.7	14.5'L	395.37
O4	2203+27	14.0'L	395.34
O5	2203+12	14.0'L	395.15
O6	2202+97.5	14.3'L	394.88
O7	2202+83	15.1'L	394.62
O8	2202+68.3	16.5'L	394.37
O9	2202+52.7	17.2'L	394.11
O10	2202+52.7	20.7'L	394.17

POINT NO.	STA.	OFFSET	ELEV.
P1	2203+61.97	0	395.14
P2	2203+50.00	0	395.31
P3	2203+41.75	0	395.42
P4	2203+27.00	0	395.16
P5	2203+12.00	0	394.88
P6	2202+97.00	0	394.61
P7	2202+82.00	0	394.34
P8	2202+67.00	0	394.06
P9	2202+52.68	0	393.80
P10	2202+49.58	0	393.75
P11	2202+32.29	0	393.43
P12	2202+15.60	0	393.13
P13	2201+99.26	0	392.83
P14	2201+83.07	0	392.54
P15	2201+66.89	0	392.25
P16	2201+50.72	0	391.95
P17	2201+36.84	0	391.66
P18	2201+19.60	0	391.39
P19	2201+04.67	0	391.12
P20	2200+89.69	0	390.84
P21	2200+74.73	0	390.57
P22	2200+59.77	0	390.30
P23	2200+44.81	0	390.03
P24	2200+29.85	0	389.74
P25	2200+14.89	0	389.48
P26	2200+00.00	0	389.21

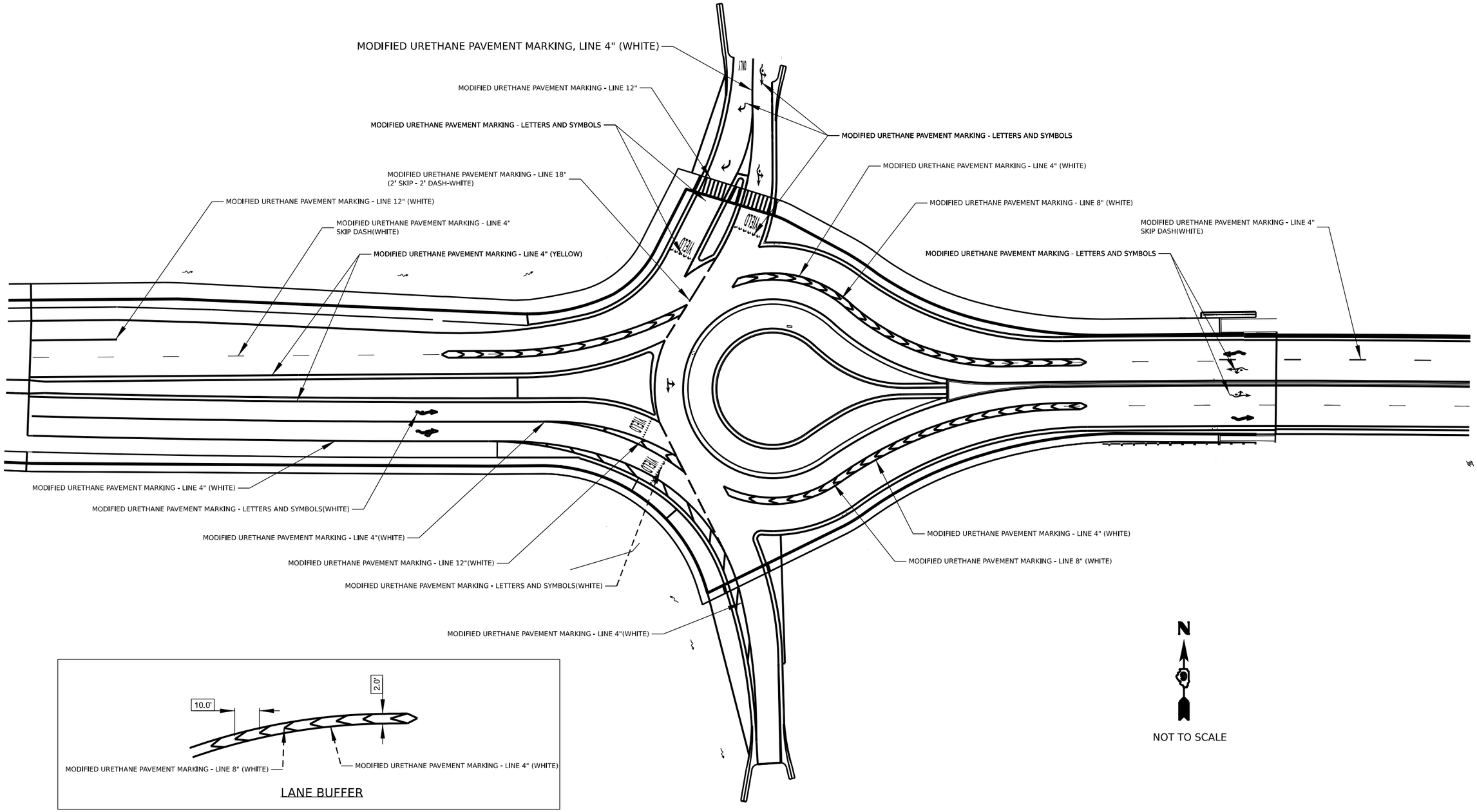

MODEL: $MODELNAME$
FILE NAME: $FILEL$

USER NAME = $USER$	DESIGNED -	REVISED -	
	DRAWN -	REVISED -	
PLOT SCALE = $SCALE$	CHECKED -	REVISED -	
PLOT DATE = $DATE$	DATE -	REVISED -	

STATE OF ILLINOIS
DEPARTMENT OF TRANSPORTATION

PAVEMENT MARKING

SCALE: | SHEET OF SHEETS | STA. TO STA.

F.A.P. RTE.	SECTION	COUNTY	TOTAL SHEETS	SHEET NO.
873	(28-5)K-1	FRANKLIN	162	92

CONTRACT NO. 78814

ILLINOIS | FED. AID PROJECT

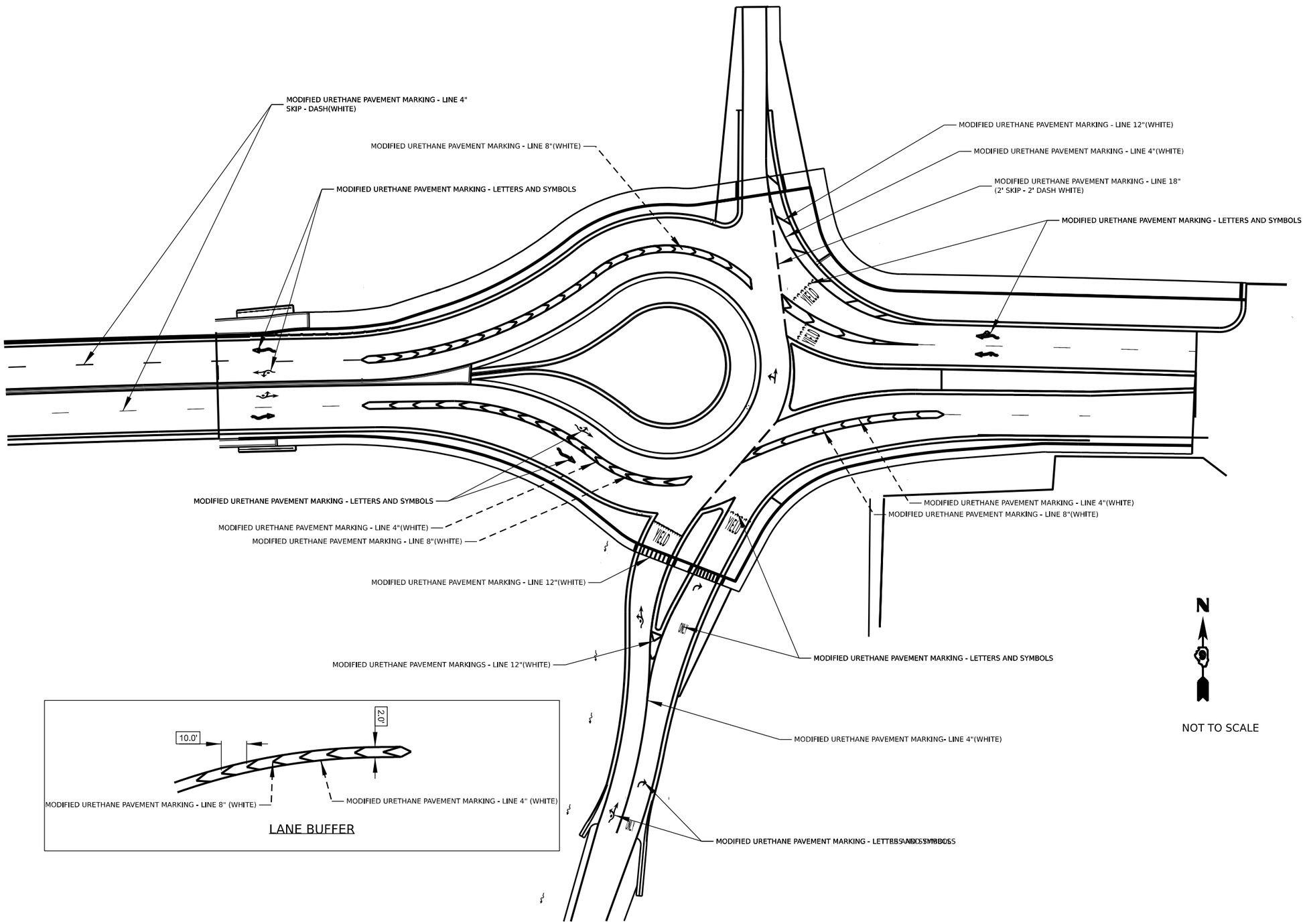

MODEL: $MODELNAME$
FILE NAME: $FILE$

USER NAME = $USER$	DESIGNED -	REVISED -	
	DRAWN -	REVISED -	
PLOT SCALE = $SCALE$	CHECKED -	REVISED -	
PLOT DATE = $DATE$	DATE -	REVISED -	

STATE OF ILLINOIS
DEPARTMENT OF TRANSPORTATION

PAVEMENT MARKINGS

SCALE: | SHEET OF SHEETS | STA. TO STA.

F.A.P. RTE.	SECTION	COUNTY	TOTAL SHEETS	SHEET NO.
873	(28-5)K-1	FRANKLIN	162	93

CONTRACT NO.

ILLINOIS | FED. AID PROJECT

SIGNING SCHEDULE

LOCATION	SIGN NAME	STATE ROUTE SIGN	INTERSTATE SIGN	CARDINAL DIRECTION	DIRECTIONAL ARROW	ONE WAY	ROUNDABOUT DIRECTIONAL	PEDESTRIAN CROSSING	DO NOT ENTER	YIELD	KEEP RIGHT	YIELD AHEAD	ROUNDABOUT CIRCULATION	ADVISORY SPEED	REMOVE SIGN PANEL TYPE 1
		COMBINATION**				COMBINATION			COMBINATION*				COMBINATION		
	MUTCD NO.	M1-5	M1-1	M3-1(l),2,3(l),4	M6-2(l) & M6-2	R6-1r	R6-4	W11-2A	R5-1	R1-2	R4-7	W3-2a	W2-6	W13-1	W3-3
	SIZE	24" X 24"	24" X 24"	24" X 12"	21" X 15"	36" X 12"	30" X 24"	36" X 36"	36" X 36"	36" X 36 "X 36"	24" X 30"	36" X 36"	36" X 36"	24" X 24"	36" X 36"
	SHAPE	SQUARE	SHIELD	RECT.	RECT.	RECT.	RECT.	DIAMOND	SQUARE	TRIANGULAR	RECT.	DIAMOND	DIAMOND	SQUARE	DIAMOND
	SIGN AREA (SF)	4.00	4.00	2.00	2.19	3.00	5.00	9.00	9.00	4.50	5.00	9.00	9.00	4.00	9.00
I-57 NB EXIT RAMP												1	1	1	1
EAST OF ROUNDABOUT											1	1	1	1	
EAST ROUNDABOUT		1	1	2	2	2	2	5	5	5					
BETWEEN ROUNDABOUTS															
WEST ROUNDABOUT		1	1	2	2	2	2	5	5	5					
WEST OF ROUNDABOUT												1	1	1	
I-57 SB EXIT RAMP												1	1	1	1
SIGN PANEL TYPE		1	1	1	1	1	1	1	1	1	1	1	1	1	1
TOTAL SIGNS		2	2	4	4	4	4	10	10	10	1	4	4	4	2
TOTAL AREA (SF)		8	8	8	9	12	20	90	90	45	5	36	36	16	18
POST TYPE		TSSS				TSSS		TSSS	TSSS		TSSS	WOOD	WOOD		
LENGTH / INSTALLATION (FOOT)		63				62		172	171		15	65	73		

* THE "DO NOT ENTER" SIGNS WILL BE MOUNTED ON THE BACK OF THE "YIELD" SIGNS

** EITHER INTERSTATE SIGN M1-1 OR STATE ROUTE SIGN M1-5 WILL BE USED FOR THE COMBINATION, NOT BOTH

SIGN PANEL TYPE 1 TOTAL =	383	SQ FT
WOOD SIGN SUPPORT TOTAL LENGTH =	138	FOOT
TELESCOPING STEEL SIGN SUPPORT (TSSS) =	483	FOOT
BASE FOR TELESCOPING STEEL SIGN SUPPORT =	29	EACH

MODEL: Sign_Schedule_1 [Sheet]
FILE NAME: pw://bldxw.bentley.com:PWIDOT/Documents/IDOT Offices/District 9/ORD Projects/78814/CADData/CADsheets/0278814-Sht-Signing_Schedule.dgn

USER NAME = JaredHarp	DESIGNED -	REVISED -	
	DRAWN -	REVISED -	
PLOT SCALE = 0.16666633 ' / in.	CHECKED -	REVISED -	
PLOT DATE = 5/16/2023	DATE -	REVISED -	

STATE OF ILLINOIS
DEPARTMENT OF TRANSPORTATION

SIGNING SCHEDULE

SCALE:SCALE | SHEET 0 OF 1 SHEETS | STA. TO STA.

F.A.P. RTE.	SECTION	COUNTY	TOTAL SHEETS	SHEET NO.
873	(28-5)K-1	FRANKLIN	162	94

CONTRACT NO. 78814

ILLINOIS | FED. AID PROJECT

SIGNING SCHEDULE (SPECIALTY)

LOCATION	SIGN NAME	LANE SIGN	DESTINATION GUIDE	STRUCTURAL STEEL SIGN SUPPORT BREAKAWAY	CONCRETE FOUNDATIONS	REINFORCEMENT BARS	WOOD SIGN SUPPORT	REMOVE GROUND MOUNTED SIGN SUPPORT	REMOVE CONCRETE FOUNDATION GROUND MOUNT	RELOCATE SIGN PANEL TYPE 1	RELOCATE SIGN PANEL TYPE 3	REMOVE SIGN PANEL TYPE 3
		SQ FT	SQ FT	POUND	CU YD	POUND	FOOT	EACH	EACH	SQ FT	SQ FT	SQ FT
	MUTCD NO.	SPECIALTY	SPECIALTY									
	SIZE	VARIES	VARIES									
	SHAPE	RECT.	RECT.									
	SIGN AREA (SF)	VARIES	VARIES									
I-57 NB EXIT RAMP		1	1	1749	4.2	468		4	4	5	88	113
EAST OF ROUNDABOUT		1	1	880	2.4	184	54	2	2			133
EAST ROUNDABOUT								2	2			60
BETWEEN ROUNDABOUTS		2	2	1080	2.8	312	108					
WEST ROUNDABOUT								2	2			60
WEST OF ROUNDABOUT		1	1	968	2.4	184	54	2	2			133
I-57 SB EXIT RAMP		1	1	1749	4.2	468		4	4	5	88	113
SIGN PANEL TYPE		3	3									
TOTAL SIGNS		6	6									
TOTAL AREA (SF)		304	602									
TOTAL		906		6426	16	1616	216	16	16	10	176	612

R6-1r -- ONE WAY
R6-4 -- ROUNDABOUT DIRECTIONAL
R5-1 -- DO NOT ENTER
R1-2 -- YIELD
R4-7 -- KEEP RIGHT
W11-2A -- PEDESTRIAN CROSSING
M1-5 -- STATE ROUTE SIGN
M1-1 -- INTERSTATE SIGN
M3-3(I) & M3-4 -- CARDINAL DIRECTION
M6-2(I) & M6-2 -- DIRECTIONAL ARROW
W2-6 -- ROUNDABOUT CIRCULATION
W13-1 ADVISORY SPEED 15 MPH
W3-2A YIELD AHEAD SYMBOL

* R5-1 MOUNTED ON BACK OF YIELD SIGN

STA. 1614+50 ₿ WB3
22' LT TO CENTER OF SIGN
SIGN PANEL - TYPE 3
DESTINATION GUIDE 2
STRUCTURAL STEEL SIGN SUPPORT - BREAKAWAY
CONCRETE FOUNDATIONS, GROUND MOUNT
2 - W10 X 22 POSTS
LENGTHS 17 FT & 17 FT

REMOVE GROUND MOUNTED SIGN SUPPORT
REMOVE CONCRETE FOUNDATION GROUND MOUNT
REMOVE SIGN PANEL TYPE 3

STA. 1615+30 ₿ WB3
22' LT TO CENTER OF SIGN
SIGN PANEL - TYPE 3
LANE SIGN 2
WOOD SIGN SUPPORT

STA. 701+05 ₿ IL149WB
22' RT TO CENTER OF SIGN
SIGN PANEL - TYPE 1
W3-2a
WOOD SIGN SUPPORT

STA. 701+85 ₿ IL149WB
20' RT TO CENTER OF SIGN
SIGN PANEL - TYPE 1
W2-6 & W13-1
WOOD SIGN SUPPORT

STA. 1610+50 ₿ WB3
35' LT TO CENTER OF SIGN
SIGN PANEL - TYPE 3
LANE SIGN 1
WOOD SIGN SUPPORT

STA. 1710+50 ₿ EB2
30' RT TO CENTER OF SIGN
SIGN PANEL - TYPE 3
DESTINATION GUIDE 4
STRUCTURAL STEEL SIGN SUPPORT - BREAKAWAY
CONCRETE FOUNDATIONS, GROUND MOUNT
2 - W6 X 15 POSTS
LENGTHS 15 FT & 16 FT

REMOVE GROUND MOUNTED SIGN SUPPORT
REMOVE CONCRETE FOUNDATION GROUND MOUNT
REMOVE SIGN PANEL TYPE 3

M1-1, M3-1(I), & M6-2(I)

W11-2A

R1-2 & R5-1

R6-1 & R6-4

M1-5, M3-2, & M6-2

R4-7

3" PIPE IN 6" CASING
CAPPED AND PURGED-
N BOTH DIRECTIONS-

YIELD

ONE WAY

N

USER NAME = JaredHarp	DESIGNED -	REVISED -	
	DRAWN -	REVISED -	
PLOT SCALE = 0.16666633 ' / in.	CHECKED -	REVISED -	
PLOT DATE = 5/16/2023	DATE -	REVISED -	

STATE OF ILLINOIS
DEPARTMENT OF TRANSPORTATION

SIGNING PLAN VIEW

SCALE:SCALE | SHEET 0 OF 1 SHEETS | STA. TO STA.

F.A.P. RTE.	SECTION	COUNTY	TOTAL SHEETS	SHEET NO.
873	(28-5)K-1	FRANKLIN	162	96

CONTRACT NO. 78814

ILLINOIS | FED. AID PROJECT

MODEL: Sign_Plan_View_1 [Sheet]
FILE NAME: pw://ildot.pw.bentley.com:PWIDOT/Documents/IDOT Offices/District 9/ORD Projects/78814/CADData/CADsheets/D278814-Sht-Signs_Plan_View.dgn

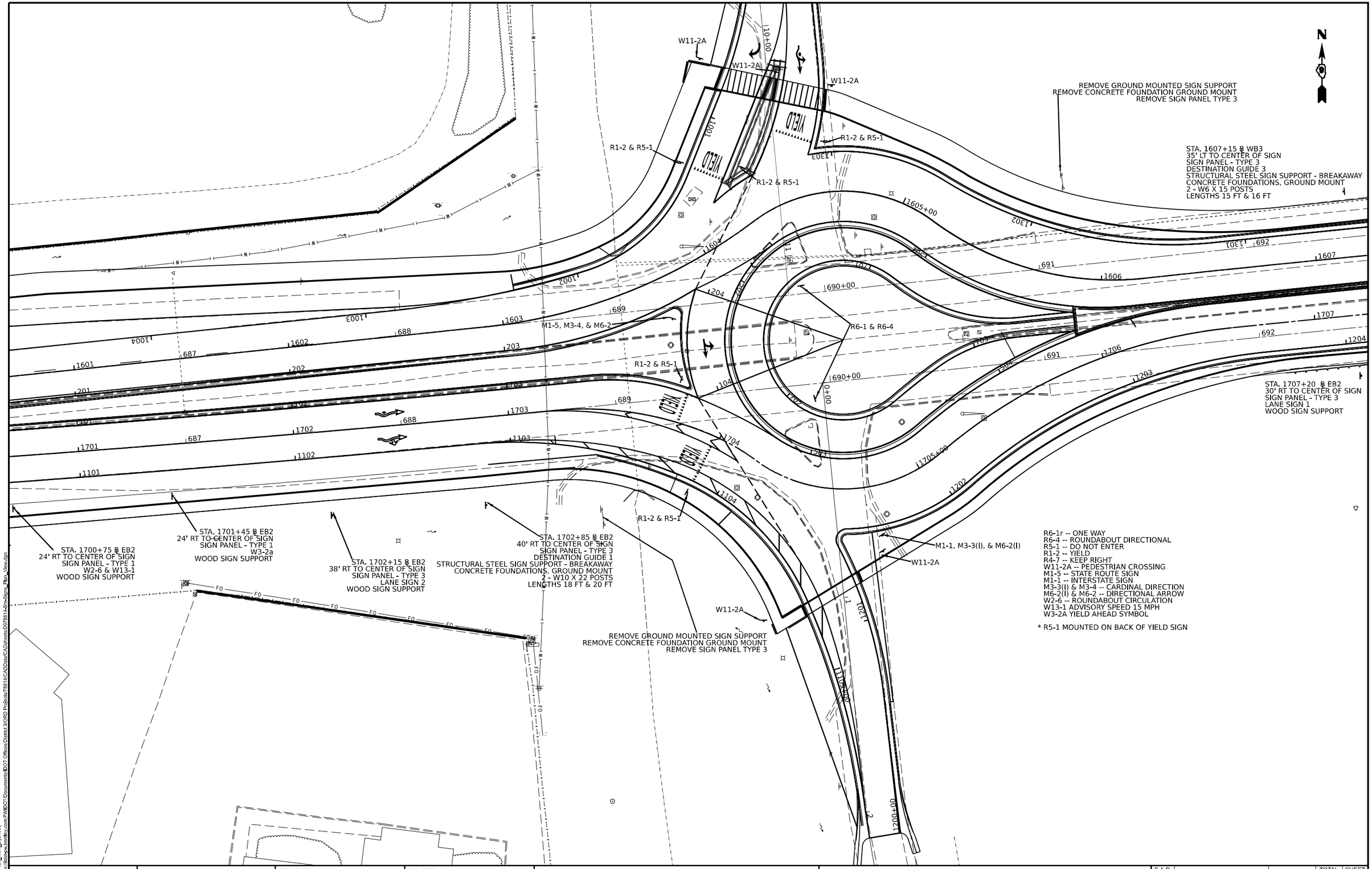

MODEL: Sign_Plan_View_2 [Sheet]
FILE NAME: pw://ildot-pw.bentley.com:PWIDOT/Documents/IDOT Offices/District 8/ORD Projects/78814/CADData/CADsheets/0978814-Sheet_Plan_View.dgn

USER NAME = JaredHarp	DESIGNED -	REVISED -	
	DRAWN -	REVISED -	
PLOT SCALE = 0.16666633 ' / in.	CHECKED -	REVISED -	
PLOT DATE = 5/16/2023	DATE -	REVISED -	

STATE OF ILLINOIS
DEPARTMENT OF TRANSPORTATION

SIGNING PLAN VIEW

SCALE:SCALE | SHEET 0 OF 1 SHEETS | STA. | TO STA.

F.A.P. RTE.	SECTION	COUNTY	TOTAL SHEETS	SHEET NO.
873	(28-5)K-1	FRANKLIN	162	97

CONTRACT NO. 78814

ILLINOIS | FED. AID PROJECT

MODEL: Sign_Plan_View_3 [Sheet]
FILE NAME: pw://bikevw.bentley.com:PW\IDOT\Documents\IDOT Offices\District 5\ORD Projects\78814\CADData\CADsheets\0278814-Sht-Signs_Plan_View.dgn

USER NAME = Jared.Harp	DESIGNED -	REVISED -	
	DRAWN -	REVISED -	
PLOT SCALE = 0.16666633 ' / in.	CHECKED -	REVISED -	
PLOT DATE = 5/16/2023	DATE -	REVISED -	

STATE OF ILLINOIS
DEPARTMENT OF TRANSPORTATION

SIGNING PLAN VIEW

SCALE:SCALE | SHEET 0 OF 1 SHEETS | STA. | TO STA.

F.A.P. RTE.	SECTION	COUNTY	TOTAL SHEETS	SHEET NO.
873	(28-5)K-1	FRANKLIN	162	98

CONTRACT NO. 78814

ILLINOIS | FED. AID PROJECT

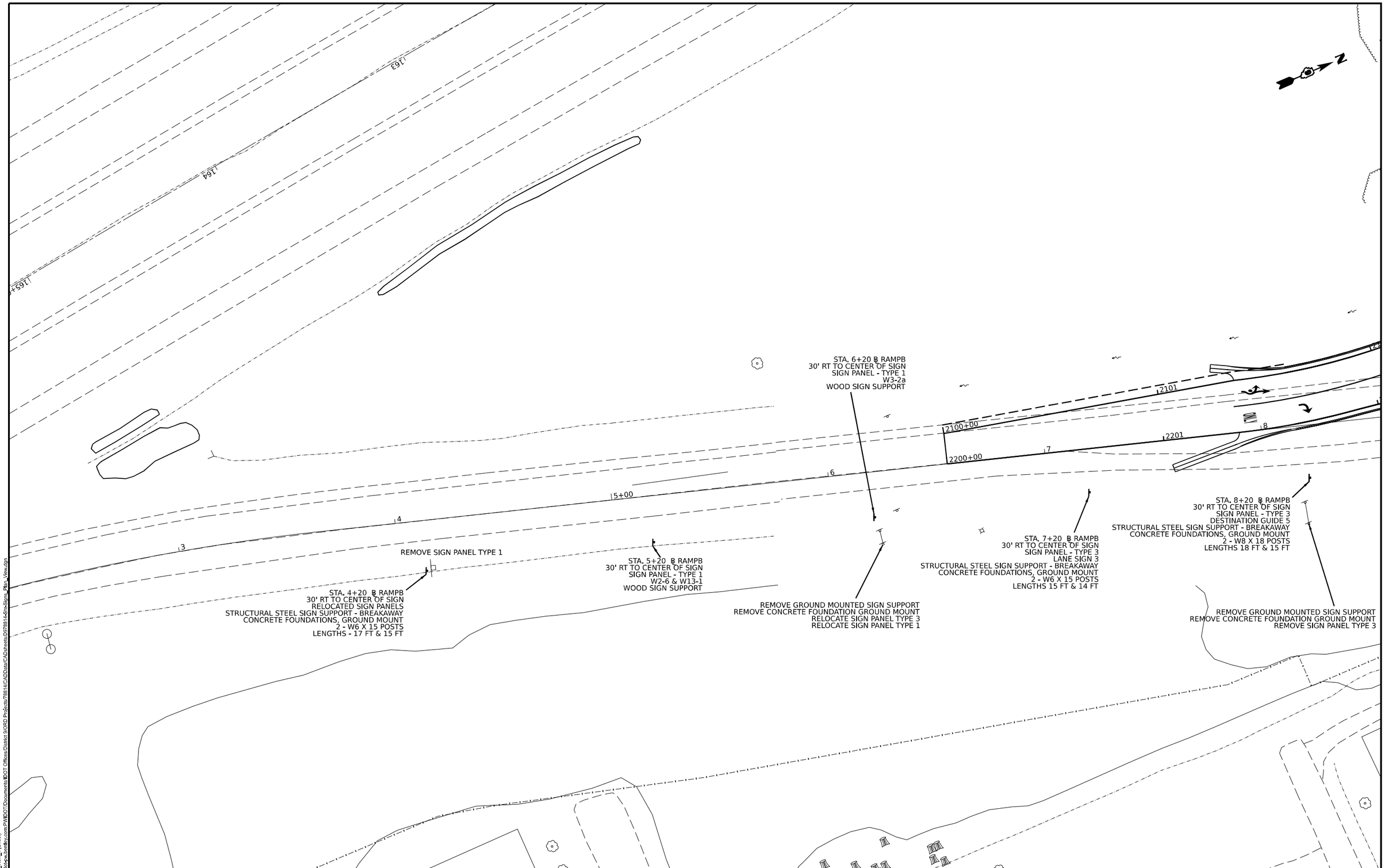

MODEL: Sign_Plan_View_4 [Sheet]
FILE NAME: pw://ildot-pw.bentley.com:PWIDOT/Documents/IDOT Offices/District 9/ORD Projects/78814/CADData/CADsheets/0278814-Sht-Signs_Plan_View.dgn

USER NAME = JaredJHarp	DESIGNED -	REVISED -	
	DRAWN -	REVISED -	
PLOT SCALE = 0.16666633 ' / in.	CHECKED -	REVISED -	
PLOT DATE = 5/16/2023	DATE -	REVISED -	

STATE OF ILLINOIS
DEPARTMENT OF TRANSPORTATION

SIGNING PLAN VIEW

SCALE:SCALE | SHEET 0 OF 1 SHEETS | STA. | TO STA.

F.A.P. RTE.	SECTION	COUNTY	TOTAL SHEETS	SHEET NO.
873	(28-5)K-1	FRANKLIN	162	99

CONTRACT NO. 78814

ILLINOIS | FED. AID PROJECT

DESTINATION GUIDE 1

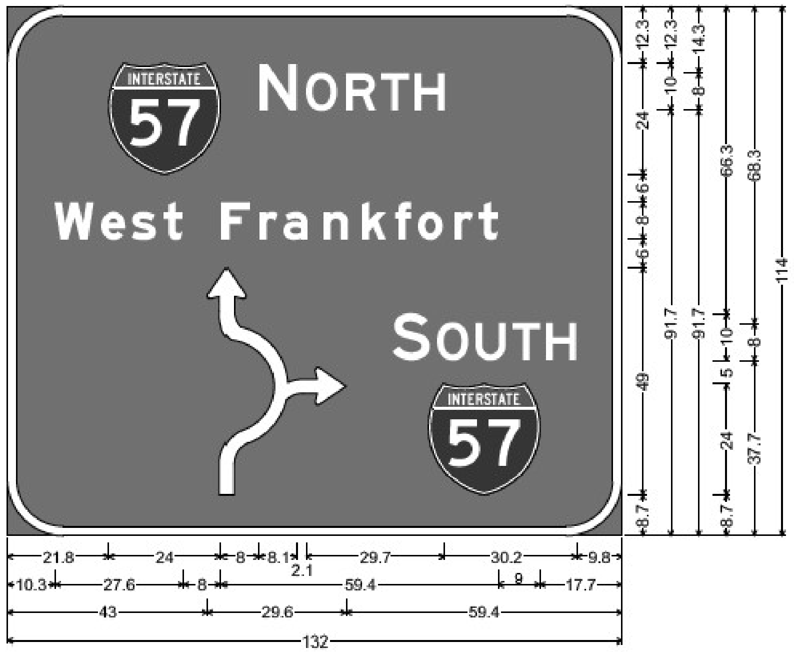

12.0" Radius, 2.0" Border, White on Green;
"NORTH", E 2K; "West Frankfort", E Mod 2K; "SOUTH", E 2K;
Table of widths and spaces

	57		N		O		R		T		H
21.8	24.0	8.0	8.1	2.1	6.7	1.8	6.5	0.9	6.0	1.4	6.4

	S		O		U		T		H	
-11.3	8.1	1.5	6.7	1.9	6.4	1.4	6.0	1.4	6.4	9.8

	W		e		s		t
10.3	8.4	1.2	5.3	1.6	5.3	1.6	4.2

	F		r		a		n		k		f		o		r		t
8.0	5.9	2.1	4.0	1.2	5.3	3.2	5.3	3.2	5.3	1.7	3.3	1.8	5.4	2.5	4.0	1.0	4.2

	57	
-14.9	23.9	17.7

	≻	
43.0	29.6	59.4

DESTINATION GUIDE 2

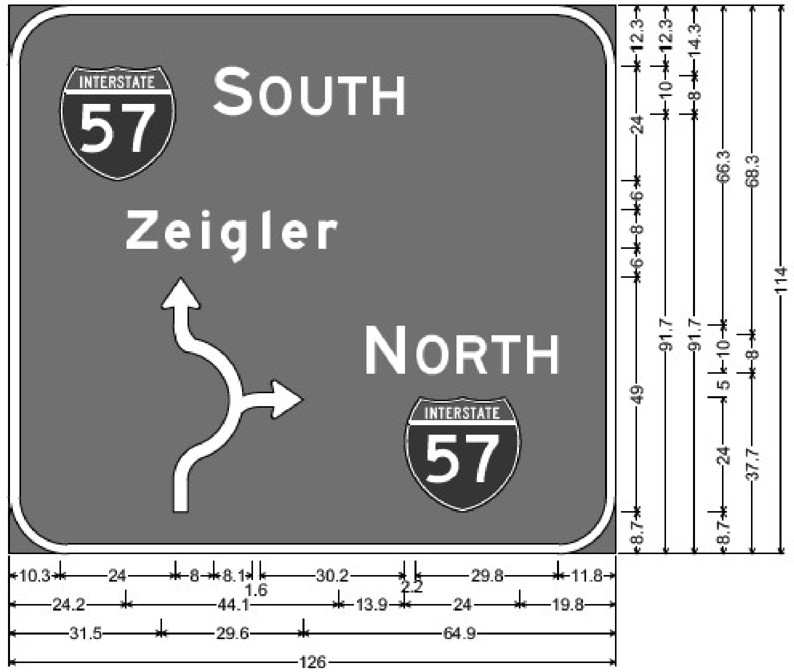

12.0" Radius, 2.0" Border, White on Green;
"SOUTH", E 2K; "Zeigler", E Mod 2K; "NORTH", E 2K;
Table of widths and spaces

	57		S		O		U		T		H
10.3	24.0	8.0	8.1	1.6	6.7	1.8	6.5	1.4	6.0	1.3	6.5

	N		O		R		T		H	
-7.9	8.0	2.1	6.7	1.9	6.4	0.9	6.0	1.4	6.5	11.8

	Z		e		i		g		l		e		r		57	
24.2	6.5	1.4	5.3	2.5	1.6	2.5	5.3	3.2	1.6	2.4	5.3	2.5	4.0	13.9	24.0	19.8

	≻	
31.5	29.6	64.9

DESTINATION GUIDE 3

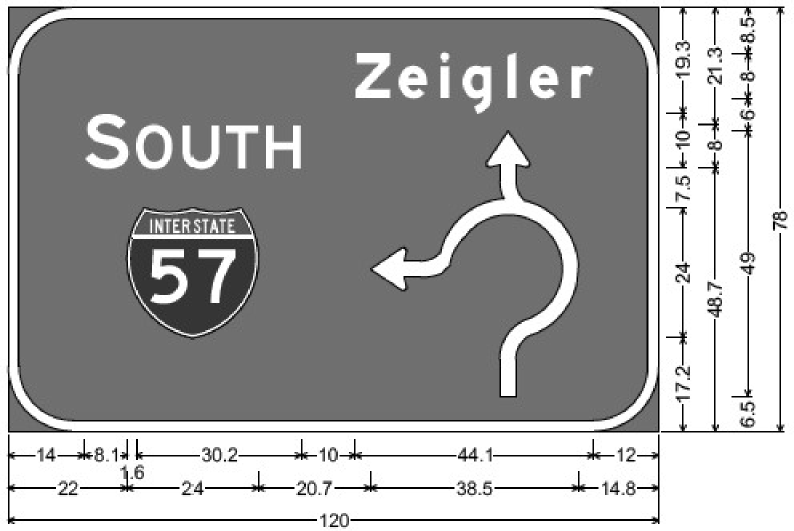

12.0" Radius, 2.0" Border, White on Green;
"SOUTH", E 2K; "Zeigler", E Mod 2K;

DESTINATION GUIDE 4

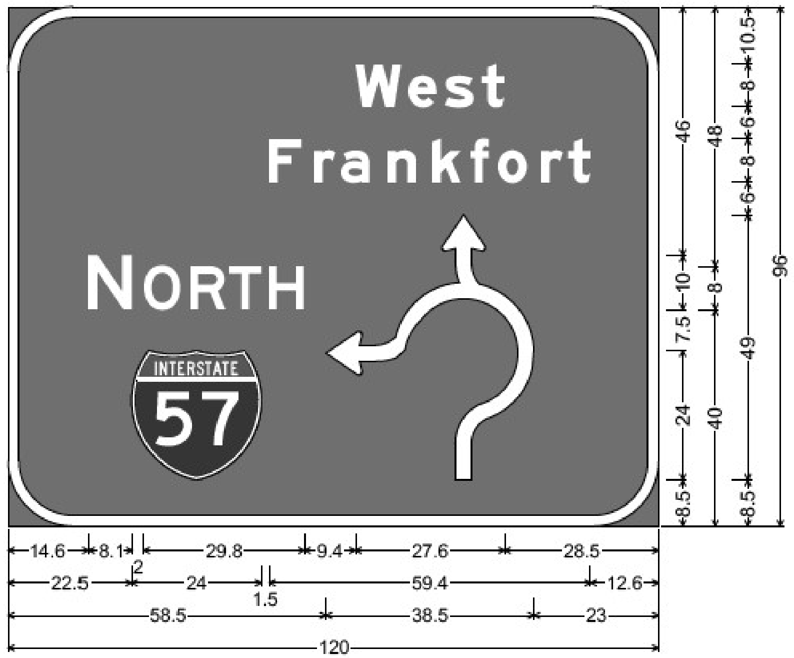

12.0" Radius, 2.0" Border, White on Green;
"NORTH", E 2K; "West", E Mod 2K; "Frankfort", E Mod 2K;

MODEL: Sign_Panel_Details_1 [Sheet]
FILE NAME: pw://ildot-pw.bentley.com:PWIDOT/Documents/IDOT Offices/District 9/ORD Projects/78814/CADData/CADsheets/D978814-Sht-Sign_Panel_Details.dgn

USER NAME = Jared.Harp	DESIGNED -	REVISED -	
	DRAWN -	REVISED -	
PLOT SCALE = 0.16666633 ' / in.	CHECKED -	REVISED -	
PLOT DATE = 5/16/2023	DATE -	REVISED -	

STATE OF ILLINOIS
DEPARTMENT OF TRANSPORTATION

SIGN PANEL DETIALS

SCALE:SCALE | SHEET 0 OF 1 SHEETS | STA. | TO STA.

F.A.P. RTE.	SECTION	COUNTY	TOTAL SHEETS	SHEET NO.
873	(28-5)K-1	FRANKLIN	162	100

CONTRACT NO. 78814

ILLINOIS | FED. AID PROJECT

DESTINATION GUIDE 5

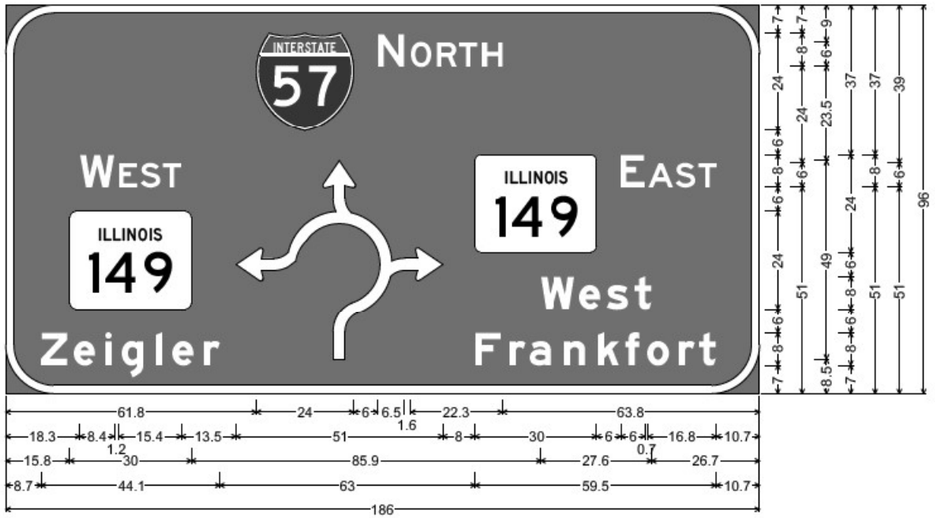

12.0" Radius, 2.0" Border, White on Green;
"NORTH", E 2K; "WEST", E 2K; "Zeigler", E Mod 2K; "EAST", E 2K; "West", E Mod 2K;
"Frankfort", E Mod 2K;

DESTINATION GUIDE 6

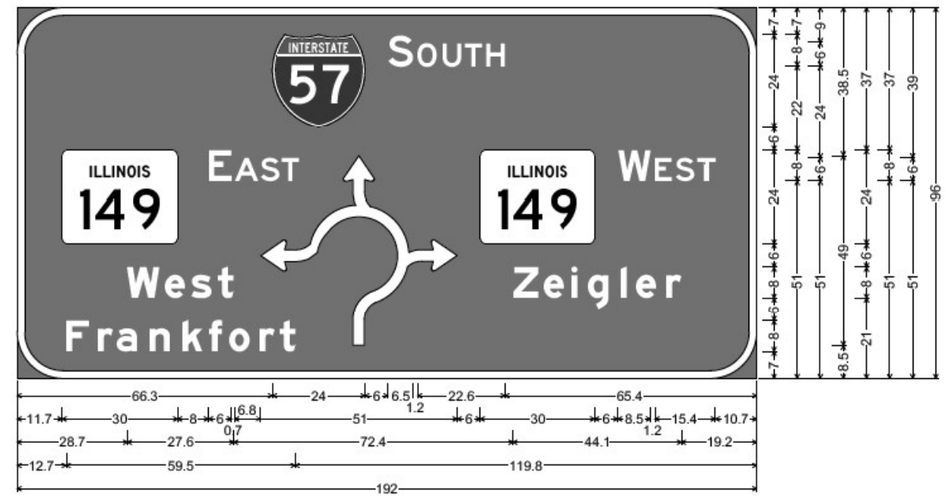

12.0" Radius, 2.0" Border, White on Green;
"SOUTH", E 2K; "EAST", E 2K; "West", E Mod 2K; "Frankfort", E Mod 2K; "WEST", E 2K;
"Zeigler", E Mod 2K;
Table of widths and spaces

66.3	24.0	6.0	S 6.5	1.2	O 5.0	1.4	U 4.8	1.1	T 4.5	1.0	H 4.8	65.4																							
11.7	30.0	8.0	E 6.0	0.7	A 6.2	0.6	S 4.9	0.6	T 4.5	-9.9	50.9	6.0	30.0	6.0	W 8.5	1.2	E 4.5	0.8	S 4.9	0.7	T 4.5	10.7													
28.7	W 8.4	1.2	e 5.3	1.6	s 5.3	1.6	t 4.2	72.4	Z 6.5	1.4	e 5.3	2.5	i 1.6	2.5	g 5.3	3.2	l 1.6	2.4	e 5.3	2.5	r 4.0	19.2													
12.7	F 6.0	2.1	r 4.0	1.2	a 5.3	3.2	n 5.3	3.2	k 5.3	1.6	f 3.4	1.8	o 5.4	2.5	r 4.0	1.0	t 4.2	119.8																	

MODEL: Sign_Panel_Details_2 [Sheet]
FILE NAME: pw://ildot-pw.bentley.com:PWIDOT/Documents/IDOT Offices/District 5/ORD Projects/78814/CADData/CADsheets/D378814-Sht-Sign_Panel_Details.dgn

USER NAME = JaredJHarp	DESIGNED -	REVISED -	
	DRAWN -	REVISED -	
PLOT SCALE = 0.16666633 ' / in.	CHECKED -	REVISED -	
PLOT DATE = 5/16/2023	DATE -	REVISED -	

STATE OF ILLINOIS
DEPARTMENT OF TRANSPORTATION

SIGN PANEL DETAILS

SCALE:SCALE | SHEET 0 OF 1 SHEETS | STA. | TO STA.

F.A.P. RTE.	SECTION	COUNTY	TOTAL SHEETS	SHEET NO.
873	(28-5)K-1	FRANKLIN	162	101
		CONTRACT NO. 78814		
		ILLINOIS	FED. AID PROJECT	

LANE SIGN 1

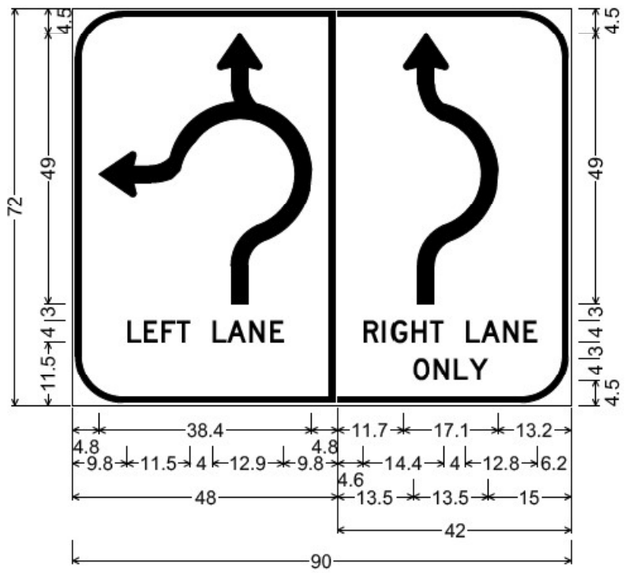

9.0" Radius, 1.0" Border, 0.5" Indent, Black on White;
"LEFT LANE", D 2K;

9.0" Radius, 1.0" Border, 0.5" Indent, Black on White;
"RIGHT LANE", D 2K; "ONLY", D 2K;

LANE SIGN 2

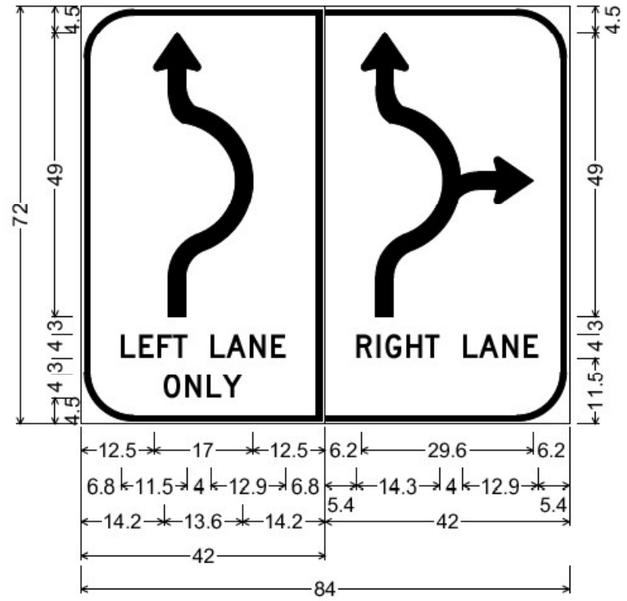

9.0" Radius, 1.0" Border, 0.5" Indent, Black on White;
"LEFT LANE", D 2K; "ONLY", D 2K;

9.0" Radius, 1.0" Border, 0.5" Indent, Black on White;
"RIGHT LANE", D 2K;

LANE SIGN 3

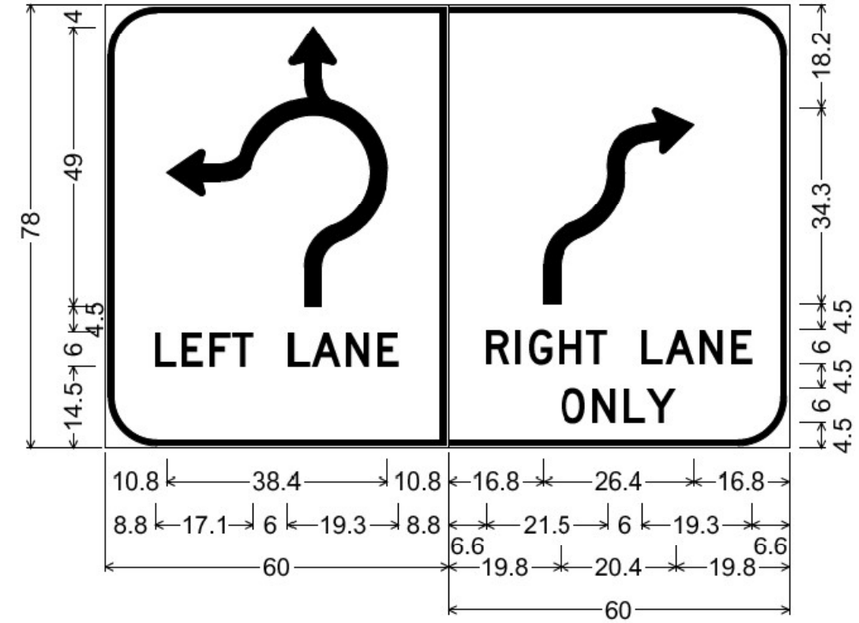

9.0" Radius, 1.0" Border, 0.5" Indent, Black on White;
"LEFT LANE", D 2K;

9.0" Radius, 1.0" Border, 0.5" Indent, Black on White;
"RIGHT LANE", D 2K; "ONLY", D 2K;

Table of distances between letter and object lefts

10.8	38.4	10.8							
8.8	L 4.6	E 4.7	F 4.1	T 9.7	L 4.1	A 6.0	N 5.5	E 3.7	8.8
16.8	26.4	16.8							
6.6	R 5.1	I 2.3	G 5.4	H 5.0	T 9.7	L 4.1	A 6.0	N 5.5	E 3.7	6.6
19.8	O 5.6	N 5.5	L 4.1	Y 5.2	19.8				

MODEL: Sign_Panel_Details_3 [Sheet]
FILE NAME: pw://bdxw.bentley.com:PWIDOT/Documents/IDOT Offices/District 5/ORD Projects/78814/CADData/CADsheets/0278814-Sht-Sign_Panel_Details.dgn

USER NAME = JaredHarp	DESIGNED -	REVISED -	
	DRAWN -	REVISED -	
PLOT SCALE = 0.16666633 ' / in.	CHECKED -	REVISED -	
PLOT DATE = 5/16/2023	DATE -	REVISED -	

STATE OF ILLINOIS
DEPARTMENT OF TRANSPORTATION

SIGN PANEL DETAILS

SCALE:SCALE | SHEET 0 OF 1 SHEETS | STA. | TO STA.

F.A.P. RTE.	SECTION	COUNTY	TOTAL SHEETS	SHEET NO.
873	(28-5)K-1	FRANKLIN	162	102

CONTRACT NO. 78814

ILLINOIS | FED. AID PROJECT

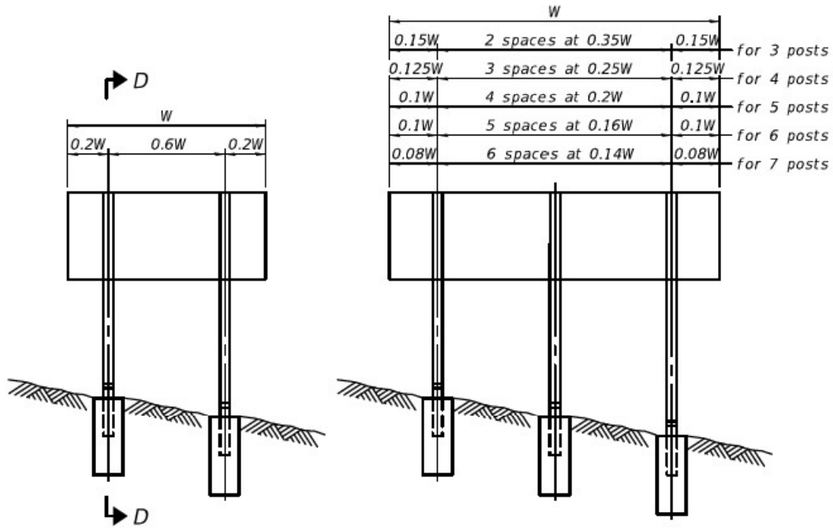

ELEVATION

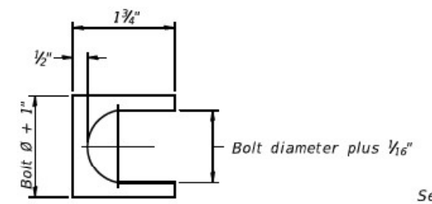

SHIM DETAIL

Furnish two 0.01" thick and two 0.03" thick stainless steel or brass (ASTM B36) shims per post.

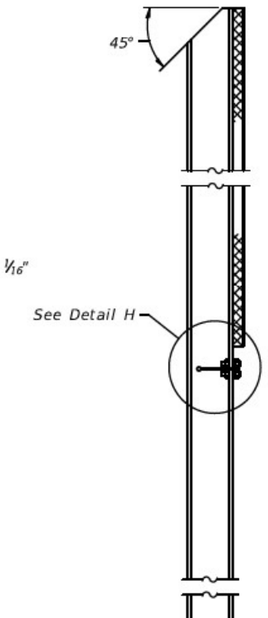

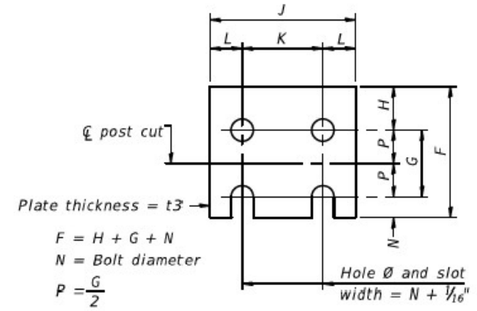

FUSE PLATE DETAIL

(Install with notches down.)

FUSE PLATE DATA		
N = Bolt Diameter	G	H
½"	2"	1⅛"
⅝"	2¼"	1¼"
¾"	2½"	1⅜"
⅞"	2¾"	1½"
1"	3"	1⅝"
1⅛"	3¼"	1¾"
1¼"	3½"	1⅞"

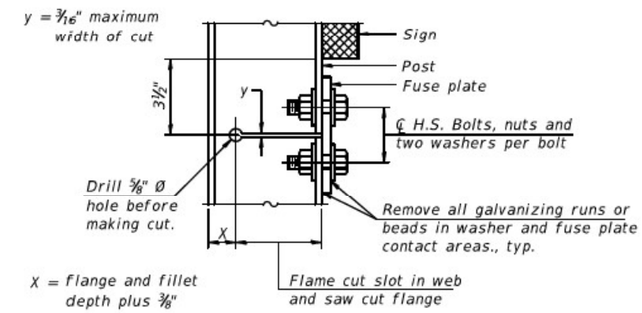

DETAIL H

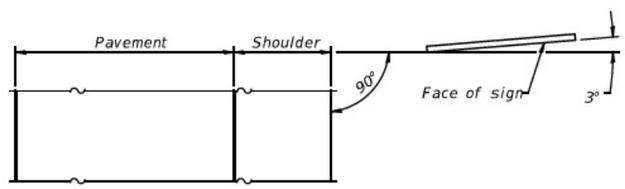

LOCATION SKETCH

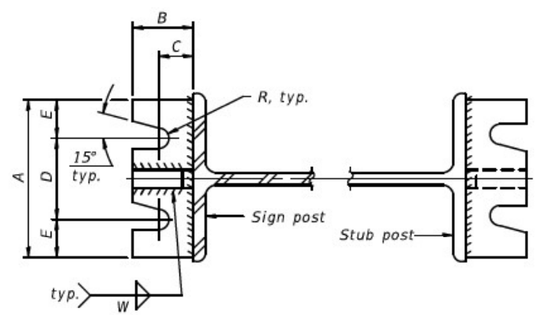

SECTION A-A

SECTION B-B

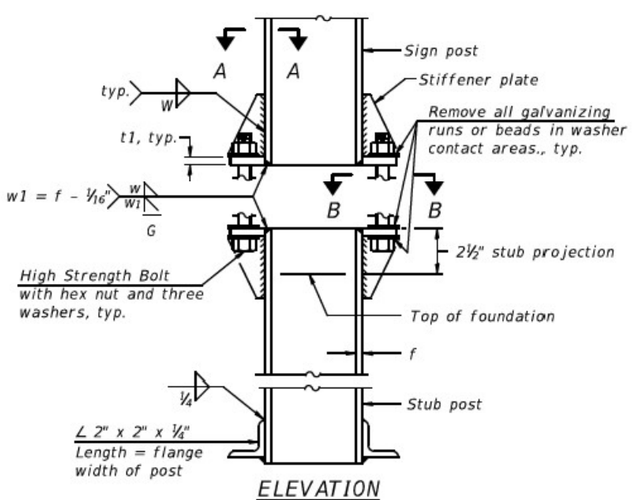

ELEVATION

SIGN POST & STUB POST

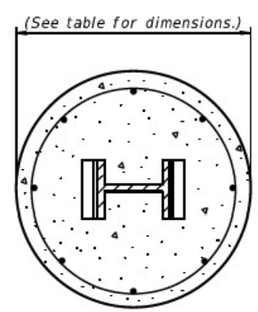

SECTION C-C

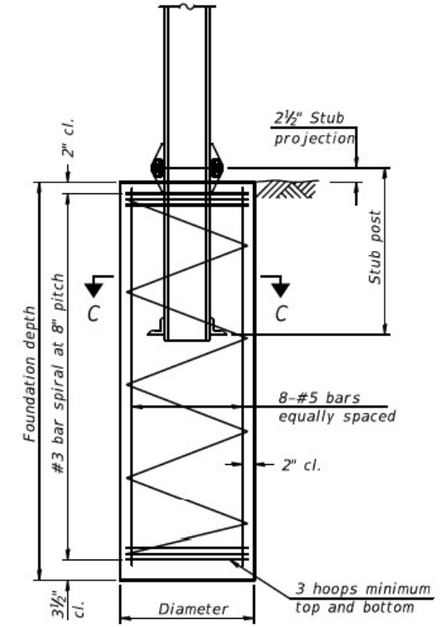

SECTION D-D

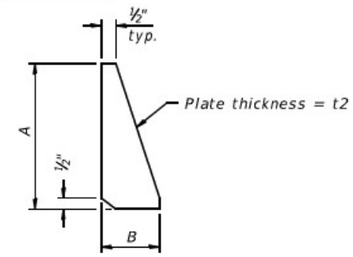

STIFFENER PLATE DETAIL

Diameter

GENERAL NOTES

Posts shall be plumbed by using shims with post-to-stub post connection bolts snug tight only. Final tightening of all High Strength Bolts shall be in accordance with Article 727.05 and threads at the junction of the bolt and nut shall be burred or center punched to prevent the nut from loosening.

LOADING: 80 m.p.h. wind with 30% gust factor, normal to sign.

DESIGN STRESSES:
Structural steel - 20,000 p.s.i.
Reinforcing steel - 20,000 p.s.i.
Concrete - 1,400 p.s.i.
Footing soil pressure - 2,000 p.s.f.

After fabrication, the post, fuse plate and upper 6", min. of the stub post shall be hot-dip galvanized in accordance with AASHTO M111. All bolts, nuts and washers shall be hot-dip galvanized in accordance with AASHTO M232.

Work this sheet with Base Sheet BAW-A-2.

BAW-A-1 2-17-2017

(Sheet 1 of 2)

USER NAME = JaredHarp	DESIGNED -	REVISED -	STATE OF ILLINOIS DEPARTMENT OF TRANSPORTATION
	DRAWN -	REVISED -	
PLOT SCALE = 0.16666633 ' / in.	CHECKED -	REVISED -	
PLOT DATE = 5/16/2023	DATE -	REVISED -	

BREAK-AWAY WIDE FLANGE STEEL SIGN POST DETAILS

SCALE: 1"=5' | SHEET 0 OF 1 SHEETS | STA. ___+__.__ TO STA. ___+__.__

F.A.P. RTE.	SECTION	COUNTY	TOTAL SHEETS	SHEET NO.
873	(28-5)K-1	FRANKLIN	162	103
		CONTRACT NO. 78814		
		ILLINOIS FED. AID PROJECT		

MODEL: Break_Away_Post_I [Sheet]
FILE NAME: pw://bldsew.bentley.com:PWIDOT/Documents/IDOT Offices/District 5/ORD Projects/78814/CADData/CADSheets/0978814-Sht-Break_Away_Steel_Post.dgn

POST	CONCRETE FOUNDATION TABLE								POST TO STUB POST CONNECTION DATA										FUSE PLATE DATA			
	Foundation			Reinforcement				Stub Post														
	Diameter	*Minimum Depth	Concrete (1) cu. yds.)	Vertical Bars Length	Bar Spirals Diameter	Bar Spirals Length	lbs. (2)	Length	Bolt Size	A	B	C	D	E	t1	t2	R	W	J	K	L	t3
W6x9	2'-0"	6'-0"	0.70	5'-9"	1'-8½"	79'-0"	78	2'-3"	⅝" x 3¼"	6"	2¼"	1¼"	3½"	1⅛"	¾"	½"	11/32"	¼"	4"	2¼"	⅞"	¼"
W6x15	2'-0"	6'-0"	0.70	5'-9"	1'-8½"	79'-0"	78	2'-6"	⅝" x 3¼"	6"	2¼"	1¼"	3½"	1⅛"	¾"	½"	11/32"	¼"	6"	3½"	1¼"	⅜"
W8x18	2'-0"	6'-0"	0.70	5'-9"	1'-8½"	79'-0"	78	2'-6"	¾" x 3¾"	6"	2½"	1⅜"	3¼"	1⅜"	1"	½"	13/32"	5/16"	5¼"	2¾"	1¼"	⅜"
W10x22	2'-6"	6'-6"	1.18	6'-3"	2'-2½"	105'-0"	92	3'-0"	¾" x 3¾"	6"	2½"	1⅜"	3¼"	1⅜"	1"	½"	13/32"	5/16"	5¾"	2¾"	1½"	½"
W10x26	2'-6"	7'-0"	1.27	6'-9"	2'-2½"	112'-0"	98	3'-0"	⅞" x 4"	7"	2¾"	1½"	4"	1½"	1"	¾"	15/32"	⅜"	5¾"	2¾"	1½"	⅝"
W12x26	2'-6"	7'-9"	1.41	7'-6"	2'-2½"	119'-0"	107	3'-0"	⅞" x 4"	7"	2¾"	1½"	4"	1½"	1"	¾"	15/32"	⅜"	6½"	3½"	1½"	⅝"
W14x30	3'-0"	7'-3"	1.90	7'-0"	2'-8½"	145'-0"	113	3'-0"	⅞" x 4"	7"	2¾"	1½"	4"	1½"	1"	¾"	15/32"	⅜"	6¾"	3½"	1⅝"	½"
W14x38	3'-0"	8'-0"	2.09	7'-9"	2'-8½"	153'-0"	122	3'-6"	1" x 4½"	7½"	3"	1¾"	4"	1¾"	1¼"	¾"	17/32"	⅜"	6¾"	3½"	1⅝"	½"
W16x45	3'-0"	8'-6"	2.23	8'-3"	2'-8½"	162'-0"	130	3'-6"	1" x 4½"	7½"	3"	1¾"	4"	1¾"	1¼"	¾"	17/32"	⅜"	7"	3½"	1¾"	½"

*Dimensional changes required for varying site conditions shall be approved by the Engineer.

POST	FUSE PLATE BOLT SIZE																				
	Sign Height																				
	4'-0"	5'-0"	6'-0"	7'-0"	8'-0"	9'-0"	10'-0"	11'-0"	12'-0"	13'-0"	14'-0"	15'-0"	16'-0"	17'-0"	18'-0"	19'-0"	20'-0"	21'-0"	22'-0"	23'-0"	24'-0"
W6x9	½" x 1½"	½" x 1½"	½" x 1½"	½" x 1½"	—	—	—	—	—	—	—	—	—	—	—	—	—	—	—	—	—
W6x15	½" x 1¾"	½" x 1¾"	½" x 1¾"	⅝" x 2"	⅝" x 2"	¾" x 2"	¾" x 2"	¾" x 2"	¾" x 2"	—	—	—	—	—	—	—	—	—	—	—	—
W8x18	½" x 1¾"	½" x 1¾"	½" x 1¾"	½" x 1¾"	⅜" x 2"	⅝" x 2"	¾" x 2"	¾" x 2"	¾" x 2"	¾" x 2"	—	—	—	—	—	—	—	—	—	—	—
W10x22	½" x 2"	½" x 2"	½" x 2"	½" x 2"	½" x 2"	⅝" x 2"	⅝" x 2"	¾" x 2¼"	¾" x 2¼"	¾" x 2¼"	¾" x 2¼"	¾" x 2¼"	¾" x 2¼"	—	—	—	—	—	—	—	—
W10x26	½" x 2"	½" x 2"	½" x 2"	½" x 2"	½" x 2"	⅝" x 2¼"	⅝" x 2¼"	¾" x 2½"	¾" x 2½"	¾" x 2½"	¾" x 2½"	¾" x 2½"	¾" x 2½"	¾" x 2½"	—	—	—	—	—	—	—
W12x26	½" x 2"	½" x 2"	½" x 2"	½" x 2"	½" x 2"	⅝" x 2¼"	⅝" x 2¼"	¾" x 2½"	¾" x 2½"	¾" x 2½"	¾" x 2½"	¾" x 2½"	¾" x 2½"	¾" x 2½"	¾" x 2½"	—	—	—	—	—	—
W14x30	½" x 2"	½" x 2"	½" x 2"	½" x 2"	½" x 2"	⅝" x 2"	⅝" x 2"	¾" x 2¼"	¾" x 2¼"	¾" x 2¼"	¾" x 2¼"	¾" x 2¼"	¾" x 2¼"	¾" x 2¼"	¾" x 2¼"	¾" x 2¼"	¾" x 2¼"	—	—	—	—
W14x38	½" x 2"	½" x 2"	½" x 2"	½" x 2"	½" x 2"	⅝" x 2¼"	⅝" x 2¼"	¾" x 2½"	¾" x 2½"	¾" x 2½"	¾" x 2½"	⅞" x 2½"	⅞" x 2½"	1" x 2¾"	1" x 2¾"	1" x 2¾"	1" x 2¾"	1" x 2¾"	1" x 2¾"	1" x 2¾"	1" x 2¾"
W16x45	—	½" x 2"	½" x 2"	½" x 2"	½" x 2"	½" x 2"	½" x 2"	⅜" x 2¼"	⅝" x 2¼"	⅝" x 2¼"	¾" x 2½"	¾" x 2½"	⅞" x 2½"	⅞" x 2½"	⅞" x 2½"	1" x 2¾"	1" x 2¾"	1" x 2¾"	1" x 2¾"	1" x 2¾"	1" x 2¾"

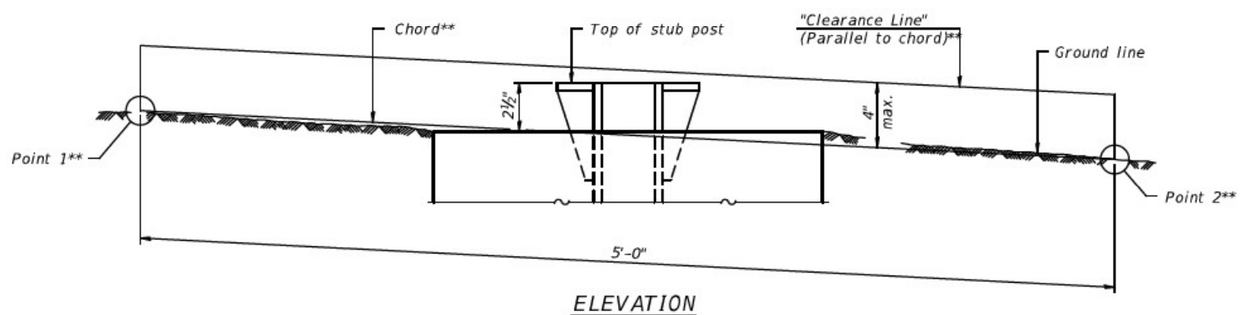

ELEVATION
GROUND LINE & STUB POST

** For all "Point 1" and "Point 2" locations, "Clearance Line" must be at or above top of stub post.

(1) Quantity includes all concrete necessary for one foundation.

(2) Includes reinforcement bars and spiral hooping for one foundation.

BAW-A-2 2-17-2017

(Sheet 2 of 2)

MODEL: Break_Away_Post_2 [Sheet]
FILE NAME: pw://ildot-pw.bentley.com:PWIDOT/Documents/IDOT Offices/Dist6 \\ORD Projects/78814/CADData/CADsheets/0278814-Sht-Break_Away_Steel_Post.dgn

USER NAME = JaredHarp	DESIGNED -	REVISED -	
	DRAWN -	REVISED -	
PLOT SCALE = 0.16666633 ' / in.	CHECKED -	REVISED -	
PLOT DATE = 5/16/2023	DATE -	REVISED -	

STATE OF ILLINOIS
DEPARTMENT OF TRANSPORTATION

BREAK-AWAY WIDE FLANGE
STEEL SIGN POST DETAILS

SCALE: 1"=5' | SHEET 0 OF 1 SHEETS | STA. ___+__.__ TO STA. ___+__.__

F.A.P. RTE.	SECTION	COUNTY	TOTAL SHEETS	SHEET NO.
873	(28-5)K-1	FRANKLIN	162	104

CONTRACT NO. 78814

ILLINOIS | FED. AID PROJECT

THIS SPACE INTENTIONALLY LEFT BLANK

TELESCOPING STEEL SIGN SUPPORT

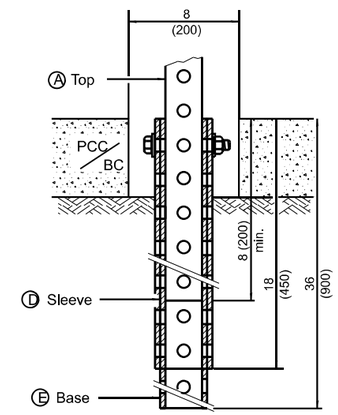

PAVEMENT MOUNT DETAIL

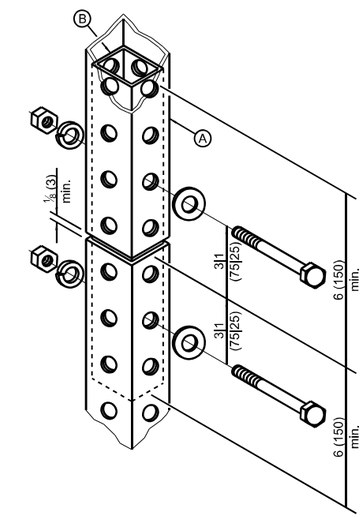

SPLICE DETAIL

Core Diameter / Depth

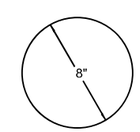

Ⓐ	2 x 2 x var. (51 x 51 var.)
Ⓑ	1¾ x 1¾ x 12 (44 x 44 x 300)
Ⓒ	2¼ x 2¼ x 60 (57 x 57 x 1500)
Ⓓ	2½ x 2½ x 18 (64 x 64 x 450)
Ⓔ	2¼ x 2¼ x 36) (57 x 57 x 900)

GENERAL NOTES

All bolts ⅜ (M10) hex head zinc or cadmium plated.

All dimensions are in inches (millimeters) unless otherwise shown.

	DRAWN	11/22/2022
	REVISED	
	REVISED	
STD. 9-29	REVISED	

MODEL: Telescoping_Sign_Support_L [Sheet]
FILE NAME: pw://ildot-pw.bentley.com:PWIDOT/Documents/IDOT Offices/Ottawa/WORD Projects/78814/CADData/CADsheets/0978814-Sht-Ottawa_Detail_S-29.dgn

USER NAME = JaredHarp	DESIGNED -	REVISED -	
	DRAWN -	REVISED -	
PLOT SCALE = 0.16666633 ' / in.	CHECKED -	REVISED -	
PLOT DATE = 5/16/2023	DATE -	REVISED -	

STATE OF ILLINOIS
DEPARTMENT OF TRANSPORTATION

DETAIL: TELESCOPING STEEL SIGN SUPPORT

SCALE:SCALE | SHEET 0 OF 1 SHEETS | STA. TO STA.

F.A.P. RTE.	SECTION	COUNTY	TOTAL SHEETS	SHEET NO.
873	(28-5)K-1	FRANKLIN	162	105
		CONTRACT NO. 78814		
	ILLINOIS	FED. AID PROJECT		

LIGHTING LEGEND

- PROPOSED LIGHTING UNIT ALUMINUM 40' M.H., 15' D.A., LED LUMINAIRE WITH 15" B.C. ON 8-5/8" X 6' METAL FOUNDATION AND BREAKAWAY COUPLINGS WITH STAINLESS STEEL SCREEN
- PROPOSED LIGHTING CONTROLLER, BASE MOUNTED, 240/480V, 100 AMP, 1-PHASE, 3-WIRE
- PROPOSED ELECTRIC SERVICE
- PROPOSED UNIT DUCT, 600V, 2-1C NO.6, 1/C NO.8 GROUND, (XLP-TYPE USE), 1" DIA. POLYETHYLENE
- EXISTING TENON MOUNT LIGHTING UNIT TO REMAIN
- R EXISTING TENON MOUNT LIGHTING UNIT TO BE REMOVED, FOUNDATION TO BE REMOVED
- R EXISTING LIGHTING CONTROLLER TO BE REMOVED
- EXISTING LIGHTING CABLE TO BE REMOVED

GENERAL NOTES:

1. ALL SETBACKS ARE MEASURED FROM EDGE OF PAVEMENT.

HIGHWAY STANDARDS

821101-02	LUMINAIRE WIRING IN POLE
825026-04	LIGHTING CONTROLLER, BASE MOUNTED, 480V
830006-05	LIGHT POLE ALUMINUM DAVIT ARM
830021-03	LIGHT POLE STEEL TENON TOP
836001-04	LIGHT POLE FOUNDATION
838001-01	BREAKAWAY DEVICES

INDEX OF SHEETS

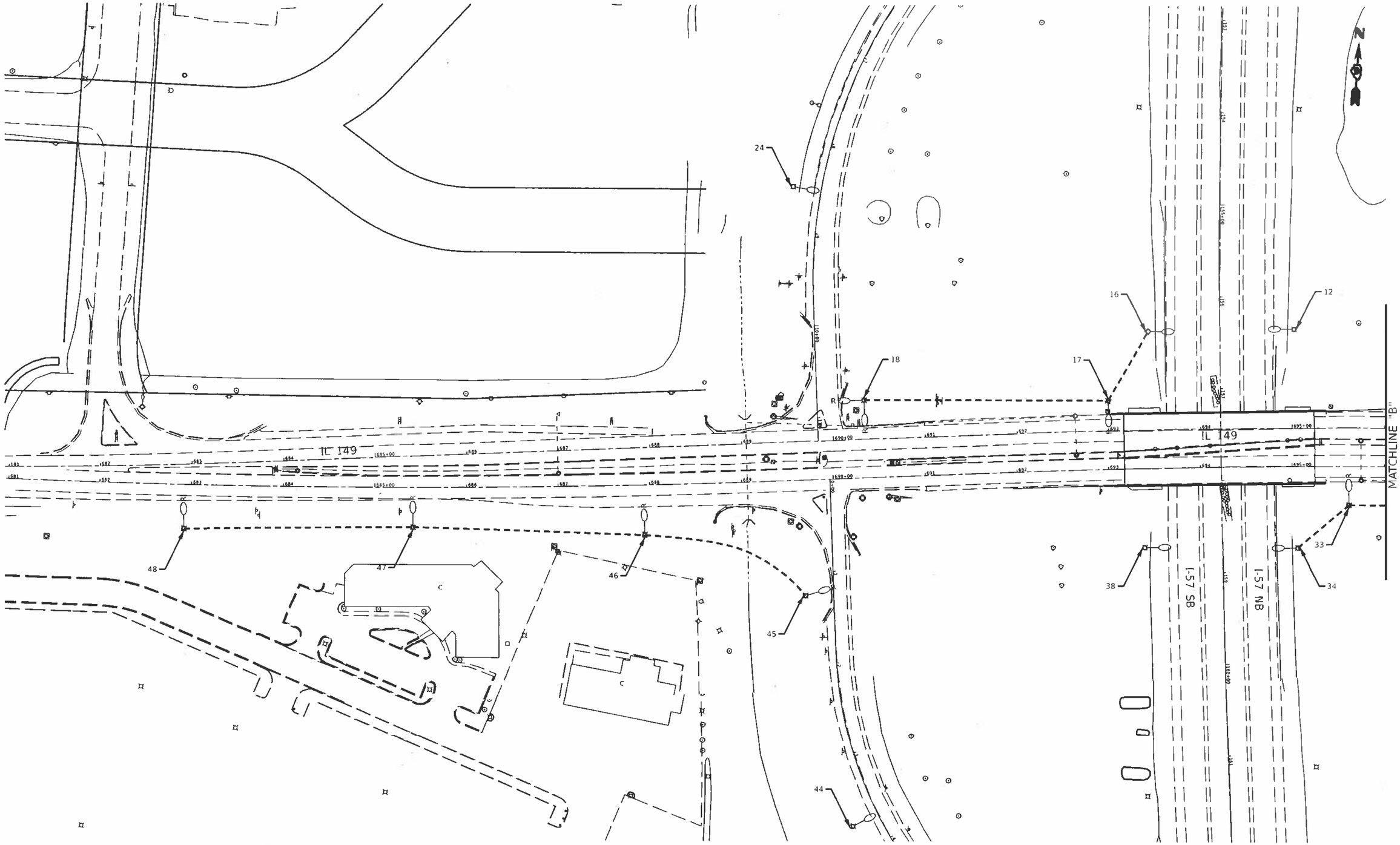

FILE NAME = $FILES$	USER NAME = $USER$	DESIGNED -	REVISED -
		DRAWN -	REVISED -
	PLOT SCALE = $SCALE$	CHECKED -	REVISED -
	PLOT DATE = $DATE$	DATE -	REVISED -

STATE OF ILLINOIS
DEPARTMENT OF TRANSPORTATION

I-57 AND IL 149 INTERCHANGE
LIGHTING REMOVAL PLAN

SCALE: 1"=50' | SHEET 2 OF 11 SHEETS | STA. | TO STA.

F.A.I. RTE.	SECTION	COUNTY	TOTAL SHEETS	SHEET NO.
57		FRANKLIN	162	107
		CONTRACT NO. 78814		
		ILLINOIS FED. AID PROJECT		

NOTES:

1. THE EXISTING LIGHTING CONTROLLER IS FED FROM THE EXISTING PUMP STATION. THE LIGHTING CONTROLLER AND CONDUCTORS TO THE PUMP STATION SHALL BE REMOVED. REMOVAL OF THE CONDUCTORS SHALL BE INCLUDED IN THE COST THE LIGHTING CONTROLLER REMOVAL. REMOVAL OF THE LIGHTING CONTROLLER SHALL BE STAGED SO THAT CIRCUIT CONTINUITY IS MAINTAINED.

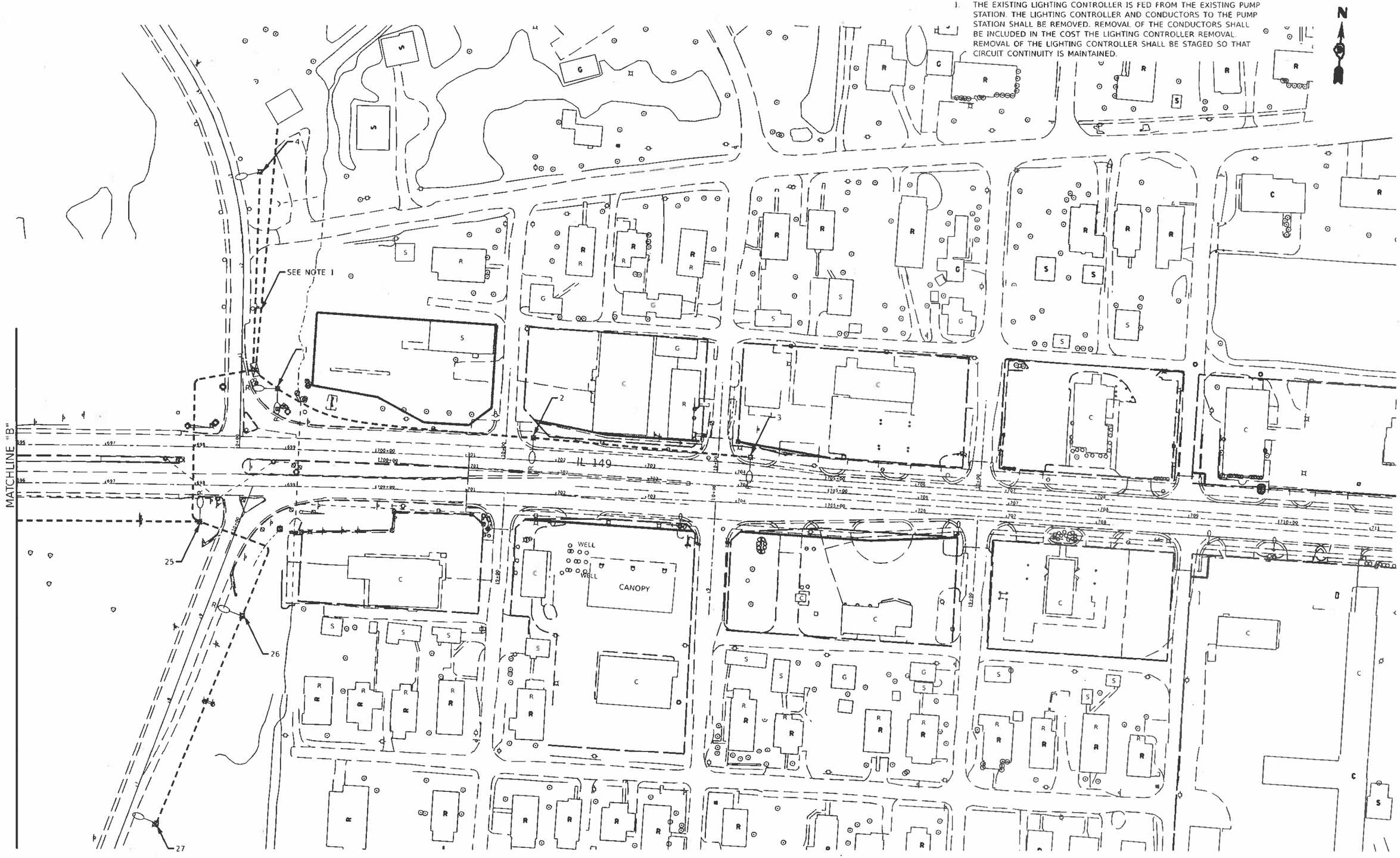

FILE NAME = $FILES$	USER NAME = $USER$	DESIGNED -	REVISED -	STATE OF ILLINOIS DEPARTMENT OF TRANSPORTATION	I-57 AND IL 149 INTERCHANGE LIGHTING REMOVAL PLAN	F.A.I. RTE.	SECTION	COUNTY	TOTAL SHEETS	SHEET NO.
		DRAWN -	REVISED -			57		FRANKLIN	162	108
	PLOT SCALE = $SCALE$	CHECKED -	REVISED -					CONTRACT NO. 78814		
	PLOT DATE = $DATE$	DATE -	REVISED -		SCALE: 1"=50' SHEET 3 OF 11 SHEETS STA. TO STA.			ILLINOIS FED. AID PROJECT		

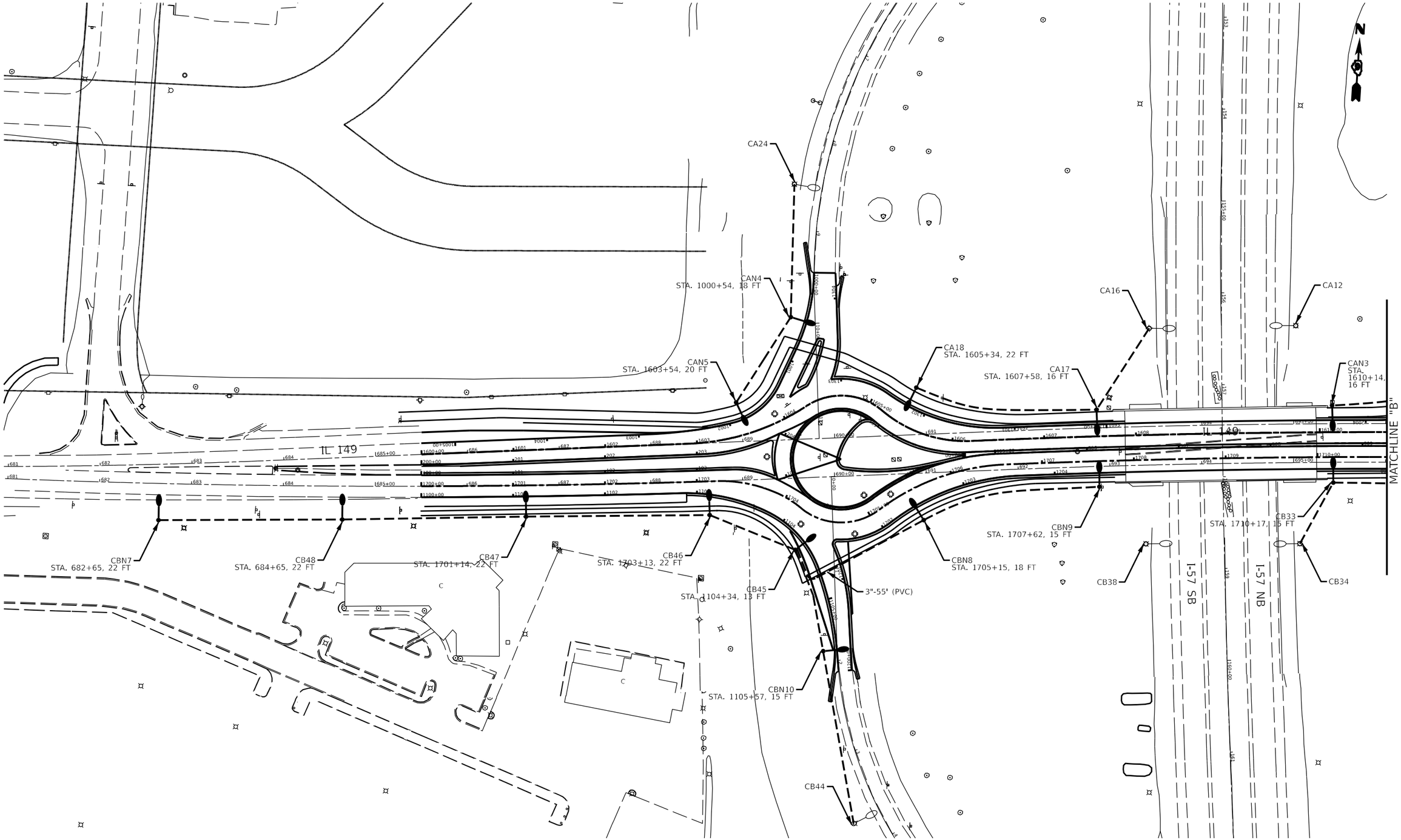

FILE NAME = $FILES$	USER NAME = $USER$	DESIGNED -	REVISED -
		DRAWN -	REVISED -
	PLOT SCALE = $SCALE$	CHECKED -	REVISED -
	PLOT DATE = $DATE$	DATE -	REVISED -

STATE OF ILLINOIS
DEPARTMENT OF TRANSPORTATION

I-57 AND IL 149 INTERCHANGE
PROPOSED LIGHTING PLAN

SCALE: 1"=50' | SHEET 4 OF 11 SHEETS | STA. TO STA.

F.A.I. RTE.	SECTION	COUNTY	TOTAL SHEETS	SHEET NO.
57	(28-5)K-1	FRANKLIN	162	109

CONTRACT NO. 78814

ILLINOIS FED. AID PROJECT

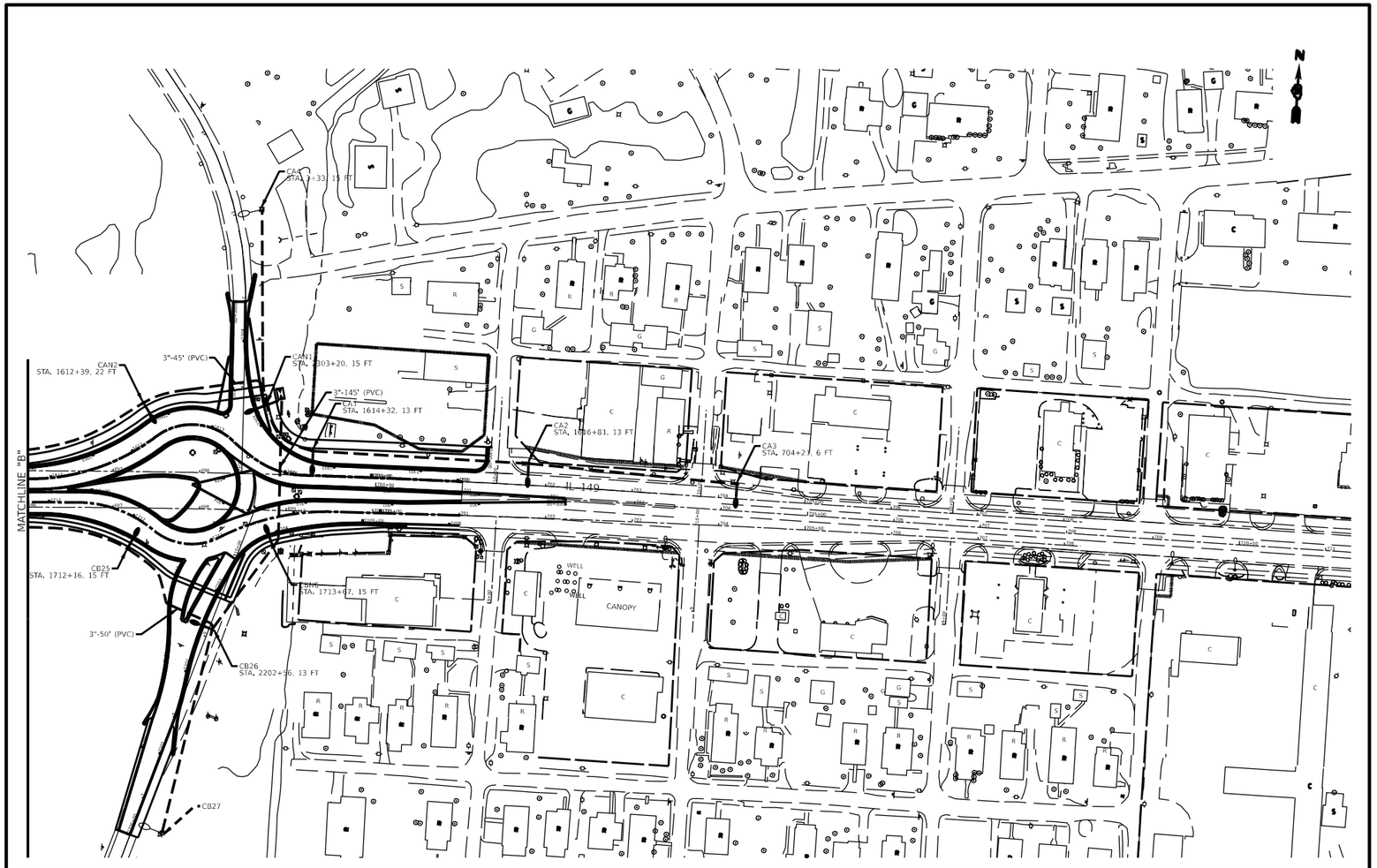

FILE NAME = $FILES$	USER NAME = $USER$	DESIGNED -	REVISED -	STATE OF ILLINOIS DEPARTMENT OF TRANSPORTATION	I-57 AND IL 149 INTERCHANGE PROPOSED LIGHTING PLAN	F.A.I. RTE.	SECTION	COUNTY	TOTAL SHEETS	SHEET NO.
		DRAWN -	REVISED -			57	(20-5R-1)	FRANKLIN	162	110
	PLOT SCALE = $SCALE$	CHECKED -	REVISED -					CONTRACT NO. 70B14		
	PLOT DATE = $DATE$	DATE -	REVISED -		SCALE: 1"=50' SHEET 5 OF 11 SHEETS STA. TO STA.			ALL PORTIONS FED. AID PROJECT		

LUMINAIRE, LED, ROADWAY, OUTPUT DESIGNATION I

Project

Date	Contract Number	Section Number	County
03-15-2023	78814		FRANKLIN

Marked Route Number	Municipality

Roadway

Lane Width	#of Lanes	Median Width	I.E.S Surface Classification	Q-Zero Value
12 ft	1	N/A	R3	0.07

Structure

Mounting Height	Arm Length	Set Back	Number of Luminaires (Highmast & Sign Lighting Only)
40 ft	15 ft	15 ft	N/A

Luminaire

Description	I.E.S. Transverse Distribution	I.E.S. Lateral Distribution
LUMINAIRE, LED, ROADWAY, OUTPUT DESIGNATION I	TYPE II	SHORT/MEDIUM

Total Light Loss Factor (LLF)	BUG Rating	Shields	Dimming Protocol
0.7	U = 0	N/A	0-10V

Layout

Spacing (to Nearest 5 Ft)	Configuration (Opposite, Staggered, 1 Sided, or Median)
210 ft	1 Sided

Performance

Average Illuminance, E_{AVE} (fc)	Uniformity Ratio, E_{AVE}/E_{MIN}
≥ 1.6	≤ 3.0:1

Average Luminance, L_{AVE} (cd/m^2)	Uniformity Ratio, L_{AVE}/L_{MIN}	Uniformity Ratio, L_{MAX}/L_{MIN}	Veiling Luminance Ratio, L_V/L_{MIN}
≥ 1.9	≤ 3.0:1	≤ 6.0:1	≤ 0.3:1

Light Tresspass

Distance to ROW (behind pole)	Max. Horizontal Illuminance at ROW, E_H	Max. Vertical Illuminance at ROW, E_V
N/A	N/A	N/A

Notes

1. Set Back is from Edge of Pavement (white line) except for sign luminaires when it is vertical and horizontal distance from the sign to the luminaire.
2. Lighting calculations shall be performed with all luminaires oriented toward and perpendicular to roadway.
3. Total Light Loss Factor (LLF) = the product of "Lumen Maintenance" (LLD) = 0.9, "Dirt Depreciation" (LDD) = 0.8, and "Equipment Factors" (EF) = 0.95.
4. Performance requirements shall be the minimum acceptable standards of photometric performance for the luminaire, based on the given conditions above.
5. Lighting calculations shall be performed in one direction only.
6. Compliance with performance criteria shall be held to one significant digit.

NOTES:

1. ALL NECESSARY REVISIONS TO THE WIRING SHOWN ON THIS SHEET SHALL BE MADE AT NO ADDITIONAL COST TO THE DEPARTMENT AND TO THE SATISFACTION OF THE ENGINEER.

ROADWAY LUMINAIRE, LED

GROUND ROD

N# NEW POLE

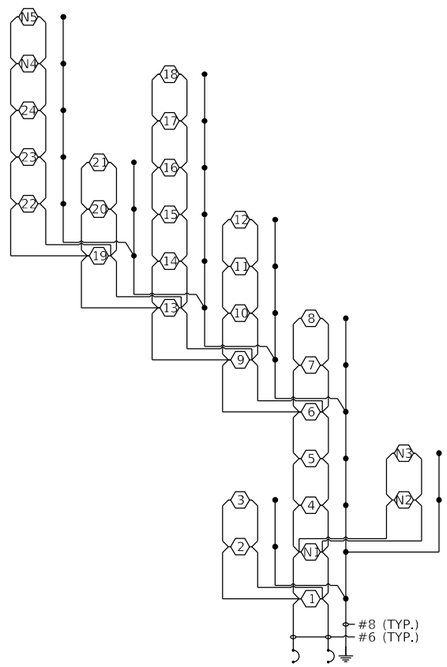

2 POLE 40 AMP BREAKER
CKT A

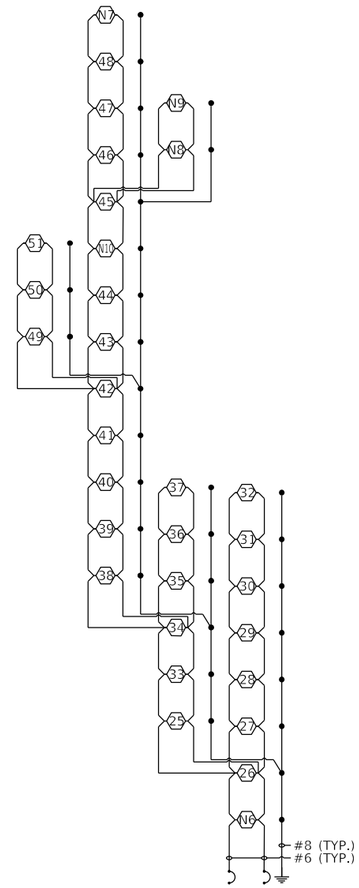

2 POLE 40 AMP BREAKER
CKT B

PROPOSED LIGHTING CONTROLLER
BASE MOUNTED, 480 VOLT, 100 AMP

FILE NAME = D978814-LightDetail-02.dgn	USER NAME = Christopher.Russell	DESIGNED -	REVISED -	STATE OF ILLINOIS DEPARTMENT OF TRANSPORTATION	I-57 AND IL 149 INTERCHANGE WIRING DIAGRAMS	F.A.I. RTE.	SECTION	COUNTY	TOTAL SHEETS	SHEET NO.
		DRAWN -	REVISED -			57	(28-5)K-1	FRANKLIN	162	112
	PLOT SCALE = 100.0000 ' / in.	CHECKED -	REVISED -					CONTRACT NO. 78814		
	PLOT DATE = 5/17/2023	DATE -	REVISED -		SCALE: NONE SHEET 7 OF 11 SHEETS STA. TO STA.		ILLINOIS FED. AID PROJECT			

ROUTE NO.	PROJ.	COUNTY	TOTAL SHEETS	SHEET NO.
I-57, SBI 149	+	FRANKLIN	15	3
SECTION NO.	DIST. NO.	ILLINOIS	PROJECT	
+ 28 (3-1, 3S, 3-2, 5S, 5-3)HL-1				

DETAILS OF INTERCHANGE

NORTH HALF OF F.A.I. ROUTE 57 & S.B.I. ROUTE 149 INTERCHANGE

(WEST FRANKFORT)

LEGEND

- EXIST. LIGHT POLE, LUMINAIRE AND FOUNDATION TO BE REMOVED. (SEE SCHEDULE, SHT. 6)
- EXIST. CONTROL INSTALLATION TO BE REMOVED (SEE SCHEDULE, SHT. 6)
- EXIST. CONDUIT AND CABLE TO BE ABANDONED AS DIRECTED BY THE ENGINEER.
- EXIST. PAVED DITCH
- PROP. STEEL LIGHT POLE, 45' MH, TENON MOUNT WITH SODIUM VAPOR LUMINAIRE, MULTI-MOUNT, 250 WATT. NUMBER IN CIRCLE INDICATES POSITION OF POLE ON [illegible]
- PROP. STEEL LIGHT POLE, 45' MH, TENON MOUNT - TWIN WITH SODIUM VAPOR LUMINAIRES, MULTI-MT. 250 WATT. NUMBER IN CIRCLE INDICATES POSITION OF POLE ON [illegible] NUMBER INDICATES [illegible] OF LUMINAIRES IN DIAGRAM.
- PROP. CONTROL INSTALLATION

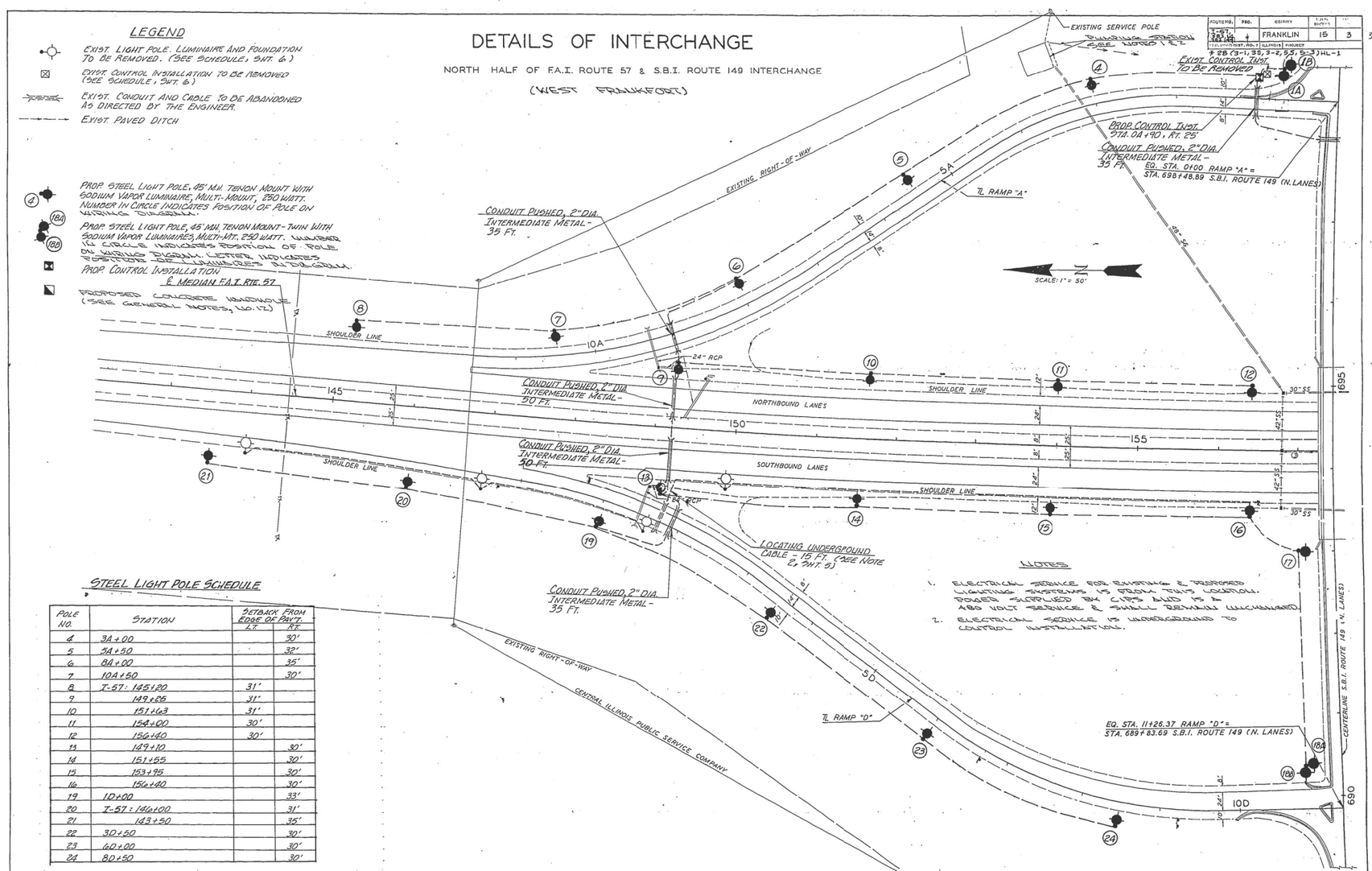

NOTES

1. ELECTRICAL SERVICE FOR EXISTING & PROPOSED LIGHTING SYSTEMS IS FROM THIS LOCATION. POWER SUPPLIED BY CUSTOMER AND IS A 480 VOLT SERVICE & SHALL REMAIN UNCHANGED.
2. ELECTRICAL SERVICE IS UNDERGROUND TO CONTROL INSTALLATION.

STEEL LIGHT POLE SCHEDULE

POLE NO.	STATION	SETBACK FROM EDGE OF PAVT. LT.	SETBACK FROM EDGE OF PAVT. RT.
4	3A+00		30'
5	5A+50		32'
6	8A+00		35'
7	10A+50		30'
8	T-57: 145+20	31'	
9	149+25	31'	
10	151+63	31'	
11	154+00	30'	
12	156+40	30'	
13	149+10		30'
14	151+55		30'
15	153+95		30'
16	156+40		30'
19	1D+00		33'
20	T-57: 140+00		31'
21	143+50		35'
22	3D+50		30'
23	6D+00		30'
24	8D+50		30'

Rev. 7-11-66 JWM

DETAILS OF NORTH HALF OF F.A.I. ROUTE 57 AND S.B.I. ROUTE 149 INTERCHANGE

D C B A 0 A B C D

TAMERAN

FOR INFORMATION ONLY

FILE NAME = D978814-LightDetail-03.dgn	USER NAME = Christopher.Russell	DESIGNED -	REVISED -
		DRAWN -	REVISED -
	PLOT SCALE = 100.0000 ' / in.	CHECKED -	REVISED -
	PLOT DATE = 5/17/2023	DATE -	REVISED -

STATE OF ILLINOIS
DEPARTMENT OF TRANSPORTATION

I-57 AND IL 149 INTERCHANGE
ELECTRICAL DETAILS

SCALE: NONE | SHEET 8 OF 11 SHEETS | STA. | TO STA.

F.A.I. RTE.	SECTION	COUNTY	TOTAL SHEETS	SHEET NO.
57	(28-5)K-1	FRANKLIN	162	113

CONTRACT NO. 78814

ILLINOIS FED. AID PROJECT

SECTION NO.	REG.	COUNTY	TOTAL SHEETS	SHEET NO.
(28-5)K-1 57 149 S.B.I. 149	5	FRANKLIN	15	4
100. HOLD DIST. NO. 7	ILLINOIS	PROJECT		

28 (S-1,35,3-2,65,5-3) HL-1

DETAILS OF S.B.I. ROUTE 149

(WEST FRANKFORT)

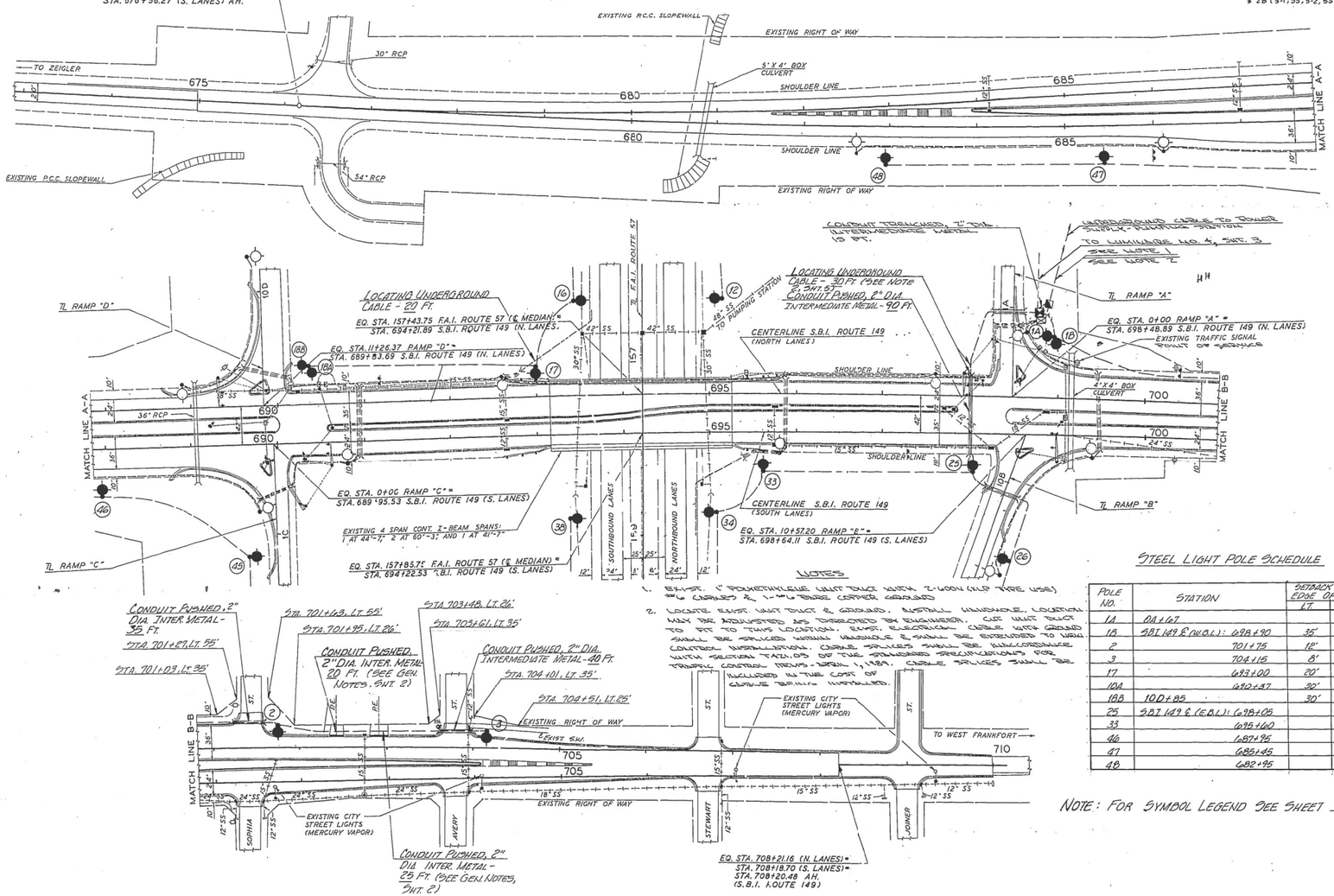

NOTES

1. 84-FT. 1" POLYETHYLENE UNIT DUCT WITH 2-600V (XLP TYPE USE) #6 CABLES & 1-#6 BARE COPPER GROUND.
2. LOCATE EXIST. UNIT DUCT & GROUND. INSTALL HANDHOLE. LOCATION MAY BE ADJUSTED AS DIRECTED BY ENGINEER. CUT UNIT DUCT TO FIT TO THIS LOCATION. EXIST. ELECTRICAL CABLE WITH GROUND SHALL BE SPLICED NEWLY INSTALLED & SHALL BE EXTENDED TO NEW CONTROL INSTALLATION. CABLE SPLICES SHALL BE IN ACCORDANCE WITH SECTION 721.03 OF THE STANDARD SPECIFICATIONS FOR TRAFFIC CONTROL DEVICES - SPAN 1, 1984. CABLE SPLICES SHALL BE INCLUDED IN THE COST OF CABLE BEING INSTALLED.

STEEL LIGHT POLE SCHEDULE

POLE NO.	STATION	SETBACK FROM EDGE OF PAVT. LT.	SETBACK FROM EDGE OF PAVT. RT.
1A	DA+167		30'
1B	SBI 149 ℄ (W.B.L.): 698+90	35'	
2	701+75	12'	
3	704+15	8'	
17	693+00	20'	
10A	690+37	30'	
18B	10D+85	30'	
25	SBI 149 ℄ (E.B.L.): 698+05		30'
33	695+60		30'
46	687+95		30'
47	685+45		30'
48	682+95		30'

NOTE: FOR SYMBOL LEGEND SEE SHEET 3.

DETAILS OF S.B.I. ROUTE 149 STA. 673+00 TO STA. 710+00

D C B A 0 A B C D

TAMERAN

FOR INFORMATION ONLY

FILE NAME = D978814-LightDetail-04.dgn	USER NAME = Christopher.Russell	DESIGNED -	REVISED -	STATE OF ILLINOIS DEPARTMENT OF TRANSPORTATION	I-57 AND IL 149 INTERCHANGE ELECTRICAL DETAILS	F.A.I. RTE.	SECTION	COUNTY	TOTAL SHEETS	SHEET NO.
		DRAWN -	REVISED -			57	(28-5)K-1	FRANKLIN	162	114
	PLOT SCALE = 100.0000 ' / in.	CHECKED -	REVISED -			CONTRACT NO. 78814				
	PLOT DATE = 5/17/2023	DATE -	REVISED -		SCALE: NONE SHEET 9 OF 11 SHEETS STA. TO STA.	ILLINOIS FED. AID PROJECT				

ILLINOIS FED. AID PROJECT	SEC.	COUNTY	TOTAL SHEETS	SHEET NO.
F.A.I. 57 & S.B.I. 149	↓	FRANKLIN	15	5

S.P. HIGHWAY NO. 7 ILLINOIS PROJECT

↓ ZB (3-1, 3-2, 5S, 5-3) HL-1

DETAILS OF INTERCHANGE

SOUTH HALF OF F.A.I. ROUTE 57 & S.B.I. ROUTE 149 INTERCHANGE
(WEST FRANKFORT)

NOTES

1. EXIST. SHOULDER SHALL BE REMOVED ALONG F.A.I. RTE. 57 AT RT. STA. 170+90 TO RT. STA. 172+40 AND LT. STA. 171+70 TO LT. STA. 173+20 AS BITUMINOUS SHOULDER REMOVAL. A FULL-DEPTH SAWCUT SHALL BE CONSTRUCTED PRIOR TO THE SHOULDER REMOVAL. PROP. BITUMINOUS SHOULDERS 8" SHALL BE INSTALLED AFTER PROP. UNIT DUCT IS PLACED IN TRENCH. THE WORK TO COMPLETE THE SAWCUT SHALL BE INCLUDED IN THE COST FOR BIT. SHOULDER REMOVAL.
2. EXIST. UNIT DUCT SHALL BE LOCATED PRIOR TO INSTALLATION OF PROP. UNIT DUCT. THIS SHALL BE PAID FOR AS LOCATING UNDERGROUND CABLE.

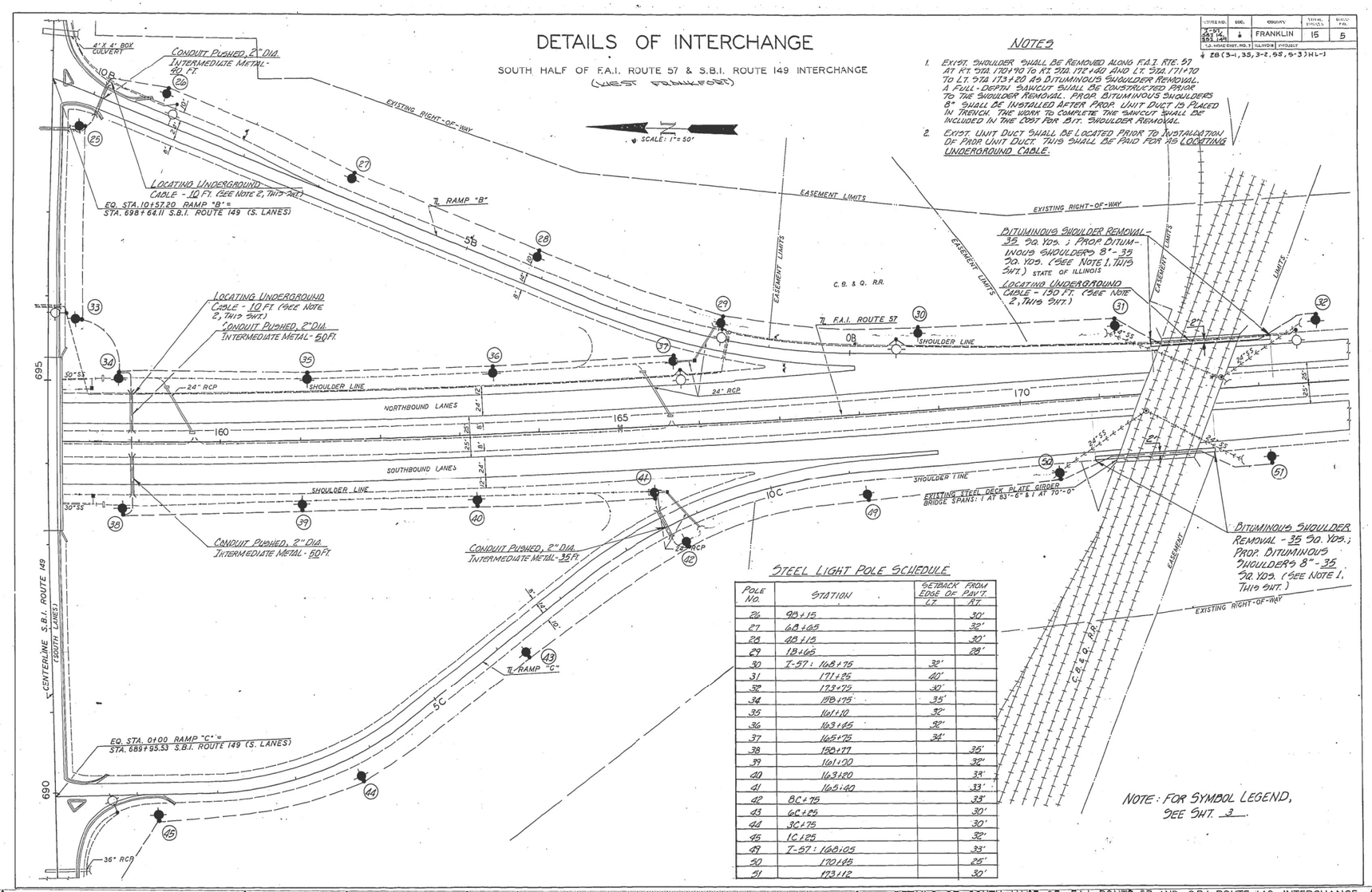

STEEL LIGHT POLE SCHEDULE

POLE NO.	STATION	SETBACK FROM EDGE OF PAV'T. LT.	SETBACK FROM EDGE OF PAV'T. RT.
26	9B+15		30'
27	6B+65		32'
28	4B+15		30'
29	1B+65		28'
30	I-57: 168+75	32'	
31	171+25	40'	
32	173+75	30'	
34	198+75	35'	
35	161+10	32'	
36	163+45	32'	
37	165+75	34'	
38	150+77		35'
39	161+00		32'
40	163+20		33'
41	165+40		33'
42	8C+75		33'
43	6C+25		30'
44	3C+75		30'
45	1C+25		32'
49	I-57: 168+05		33'
50	170+45		25'
51	173+12		30'

DETAILS OF SOUTH HALF OF F.A.I. ROUTE 57 AND S.B.I. ROUTE 149 INTERCHANGE

D C B A 0 A B C D

TAMERAN

FOR INFORMATION ONLY

FILE NAME = D978814-LightDetail-05.dgn	USER NAME = Christopher.Russell	DESIGNED -	REVISED -
		DRAWN -	REVISED -
	PLOT SCALE = 100.0000 ' / in.	CHECKED -	REVISED -
	PLOT DATE = 5/17/2023	DATE -	REVISED -

STATE OF ILLINOIS
DEPARTMENT OF TRANSPORTATION

I-57 AND IL 149 INTERCHANGE
ELECTRICAL DETAILS

SCALE: NONE | SHEET 10 OF 11 SHEETS | STA. | TO STA.

F.A.I. RTE.	SECTION	COUNTY	TOTAL SHEETS	SHEET NO.
57	(28-5)K-1	FRANKLIN	162	115

CONTRACT NO. 78814

ILLINOIS FED. AID PROJECT

ROUTE NO.	SEC.	COUNTY	TOTAL SHEETS	SHEET NO.
I-57, 149 IL, 581 149	*	FRANKLIN	15	6
FED. ROAD DIST. NO. 7	ILLINOIS	PROJECT		

* 28 (3-1, 33, 3-2, 58, 5-3) HL-1

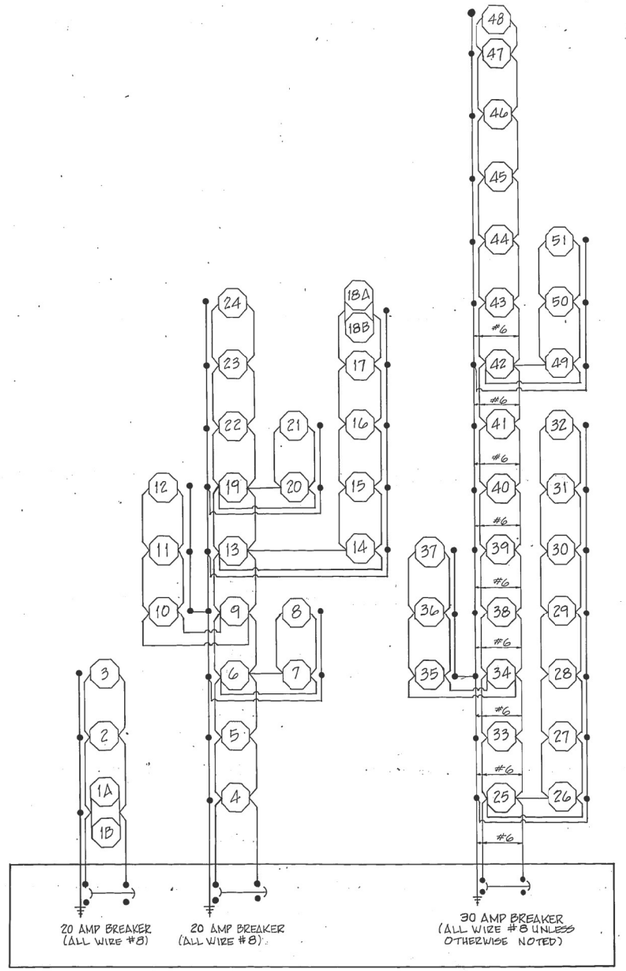

CONTROL INSTALLATION, TYPE CB-RCS-100AMP-480VOLT

WIRING DIAGRAM
(W. FRANKFORT)

REMOVAL SCHEDULE
(WEST FRANKFORT)

QUANT.	UNIT	ITEM
1	EACH	CONTROL INSTALLATION
20	EACH	LIGHT POLE WITH LUMINAIRE
20	EACH	LIGHT POLE FOUNDATION

NOTE: ALL EXIST. CONDUIT AND WIRING FOR LIGHTING TO BE ABANDONED AS DIRECTED BY THE ENGINEER. THIS WORK SHALL BE PAID FOR AS MAINTENANCE AND REMOVAL OF EXISTING LIGHTING SYSTEM COMPLETE.

REV.

DETAIL WIRING DIAGRAM (W. FRANKFORT); REMOVAL SCHEDULE (W. FRANKFORT)

D C B A 0 A B C D

TAMERAN

FOR INFORMATION ONLY

FILE NAME = D978814-LightDetail-06.dgn	USER NAME = Christopher.Russell	DESIGNED -	REVISED -	STATE OF ILLINOIS DEPARTMENT OF TRANSPORTATION	I-57 AND IL 149 INTERCHANGE ELECTRICAL DETAILS		F.A.I. RTE.	SECTION	COUNTY	TOTAL SHEETS / SHEET NO.
		DRAWN -	REVISED -				57	(28-5)K-1	FRANKLIN	162 / 116
	PLOT SCALE = 100.0000 ' / in.	CHECKED -	REVISED -				CONTRACT NO. 78814			
	PLOT DATE = 5/17/2023	DATE -	REVISED -		SCALE: NONE	SHEET 11 OF 11 SHEETS	STA.	TO STA.	ILLINOIS FED. AID PROJECT	

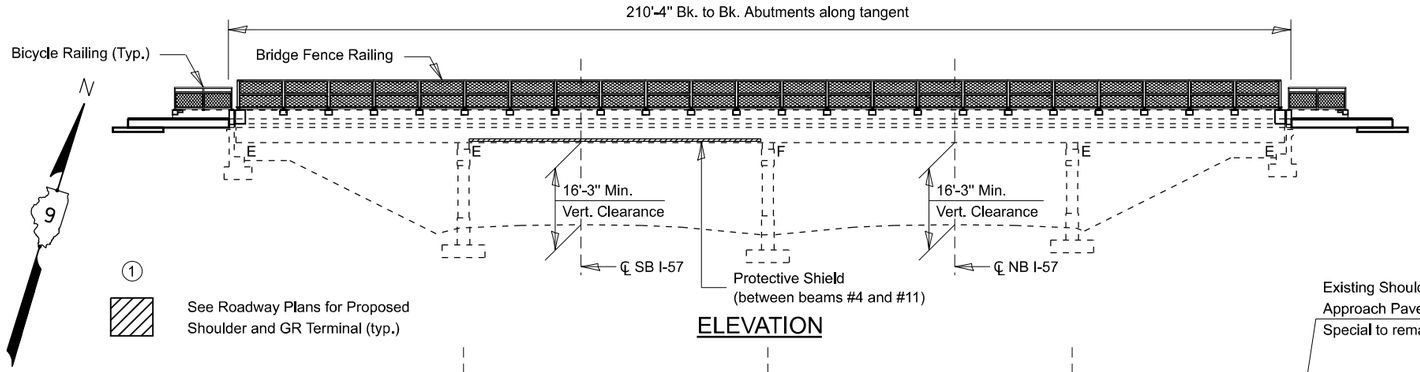

ELEVATION

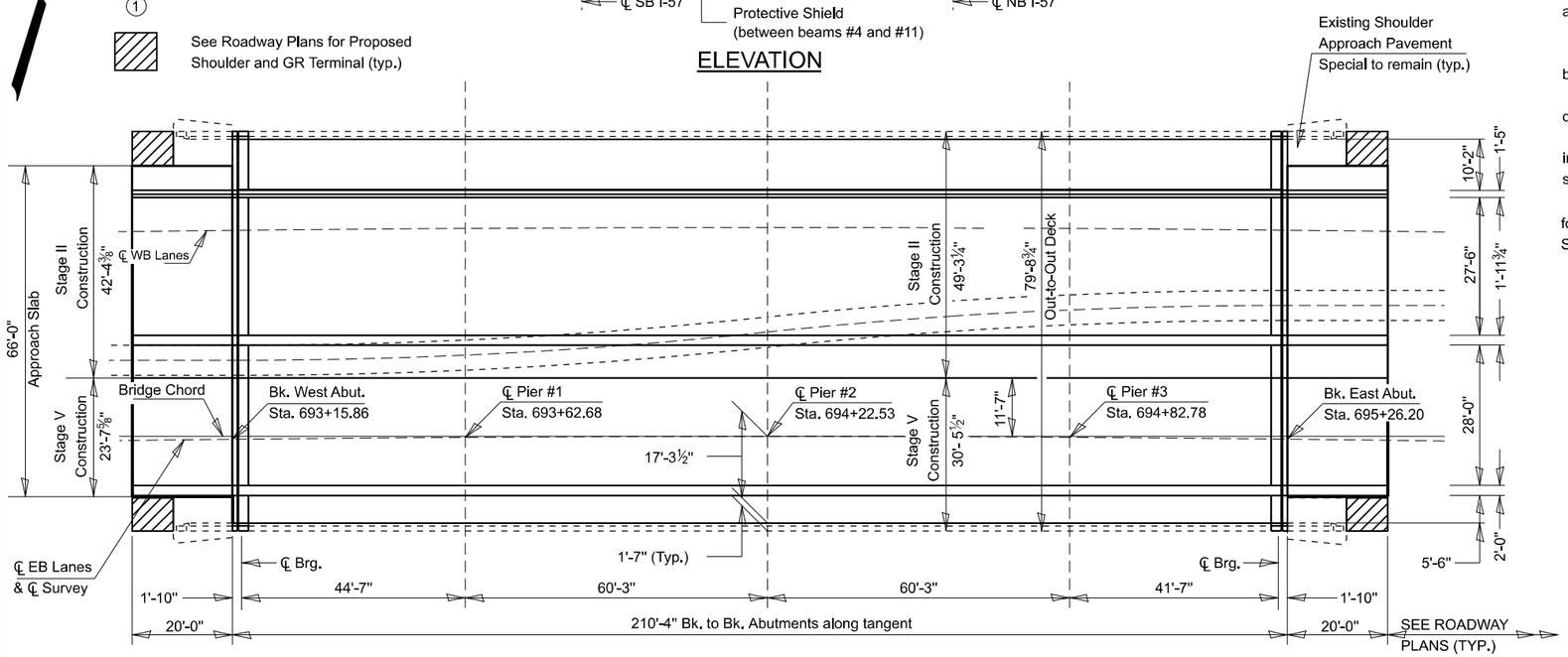

PLAN

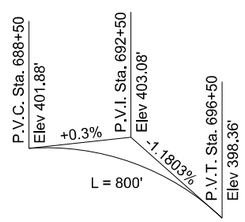

PROFILE GRADE

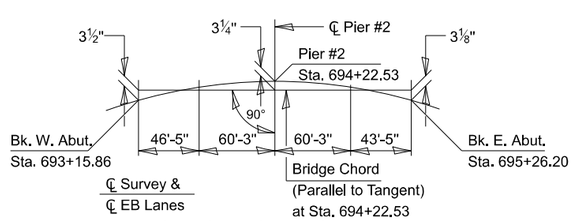

OFFSET SKETCH

DESIGN STRESSES - NEW CONSTRUCTION

f c = 3,500 psi
fy = 60,000 psi

SCOPE OF WORK

JOINT RECONSTRUCTION AT BOTH ABUTMENTS
FULL DEPTH DECK SLAB REPAIRS TO REMOVE & REPLACE
DRAINAGE SCUPPERS AND FLOOR DRAINS
REMOVE AND REPLACE CONCRETE MEDIAN
CONSTRUCT NEW PARAPET WITH OUTWARD
FACING LIGHTING FOR A MULTI-USE PATH
MICROSILICA CONCRETE OVERLAY
INSTALL RAILINGS ON TOP OF EXISTING
AND NEW PARAPETS
REMOVE & REPLACE BRIDGE APPROACH SLABS

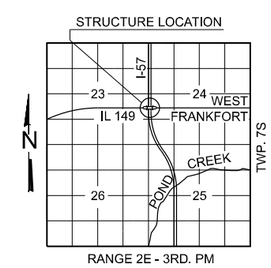

LOCATION SKETCH

GENERAL NOTES

Reinforcement bars designated (E) shall be epoxy coated.

Plan dimensions and details relative to existing plans are subject to nominal construction variations. The Contractor shall field verify existing dimensions and details affecting new construction and make necessary approved adjustments prior to construction or ordering of materials. Such variations shall not be cause for additional compensation for a change in scope of the work, however, the Contractor will be paid for the quantity actually furnished at the unit price bid for the work.

Prior to pouring the new concrete at the abutment joints, all heavy or loose rust, loose mill scale, and other loose or potentially detrimental foreign material shall be removed from the surfaces in contact with concrete. Tightly adhered paint may remain unless otherwise noted. Removal shall be accomplished by methods that will not damage the steel and the cost will be included in the pay item covering removal of the existing concrete.

Protective coat shall be applied to all new concrete surfaces on bridge parapet areas, concrete overlay, and bridge approach slabs. Seasonal limits for application shall not apply.

Synthetic fibers shall be added to the Bridge Deck Microsilica Concrete Overlay, see Special Provisions.

The reference line for stationing on this project follows the original construction survey line of the bridge and coincides with the outer edge of the traffic lane.

Joint openings shall be adjusted according to Article 520.04 of the Standard Specifications when the deck is poured at an ambient temperature other than 50°F.

Existing reinforcement bars extending into the removal area shall be cleaned, straightened, and incorporated into the new construction. Any reinforcement bars that are damaged during concrete removal shall be replaced with an approved bar splicer or anchorage system. Cost included with Concrete Removal.

The organic zinc-rich/ Epoxy/ Urethane paint system shall be used for shop and field painting.The color for the final finish coat on Parapet, Bicycle, and Bridge Fence Railing shall be black, Munsell Number N1. See Setion 506 of the Standard Specifications for "Cleaning and Painting New Steel Structures".

TOTAL BILL OF MATERIAL

	PAY ITEM	UNIT	QUANTITY
*	Protective Coat	Sq. Yd.	2,287
	Median Removal	Sq. Ft.	1,504
	Concrete Removal	Cu. Yd.	22.6
	Protective Shield	Sq. Yd.	277
	Floor Drains	Each	2
	Concrete Structures	Cu. Yd.	40.7
	Concrete Superstructure	Cu. Yd.	68.1
	Bridge Deck Grooving	Sq. Yd.	1,615
	Concrete Superstructure (Approach Slab)	Cu. Yd.	130.2
	Reinforcement Bars, Epoxy Coated	Pound	66,080
	Bar Splicers	Each	244
	Bicycle Railing	Foot	44
	Bridge Fence Railing	Foot	416
	Parapet Railing	Foot	250
	Preformed Joint Strip Seal	Foot	157
	Temporary Concrete Barrier	Foot	250
	Pinning Temporary Concrete Barrier	Each	12
	Approach Slab Removal	Sq. Yd.	293
	Bridge Deck Scarification, ¾"	Sq. Yd.	1,734
	Bridge Deck Microsilica Concrete Overlay, 2¾"	Sq. Yd.	1,734
	Deck Slab Repair (Full Depth, Type I)	Sq. Yd.	10
	Drain Scuppers, DS-11	Each	4
	Parapet Mounted Bridge Lighting System	Lump Sum	1

* On New Concrete Areas As Well As Joints

BRIDGE REPAIRS
IL. RTE. 149 OVER F.A.I. RTE. 57
F.A.I. ROUTE 57 SECTION 28-5(K-1)
FRANKLIN COUNTY
STATION 157+85.75 (F.A.I. RTE. 57)
STATION 694+22.53 (IL. RTE. 149)
STRUCTURE NO. 028-0039

MODEL: General Plan and Elevation [Sheet]
FILE NAME: pw://ildot-pw.bentley.com:PWIDOT/Documents/IDOT Offices-Districts 9/ORD Projects-78814/CADData/CADsheets/D278814-Sht-Structures.dgn

USER NAME = Zachary.Lomax	DESIGNED -	REVISED -	
	DRAWN -	REVISED -	
PLOT SCALE = 0.16666633 ' / in.	CHECKED -	REVISED -	
PLOT DATE = 5/16/2023	DATE -	REVISED -	

STATE OF ILLINOIS
DEPARTMENT OF TRANSPORTATION

GENERAL PLAN AND ELEVATION

SCALE: | SHEET 1 OF 21 SHEETS | STA. TO STA.

F.A.P RTE.	SECTION	COUNTY	TOTAL SHEETS	SHEET NO.
873	(28-5)K-1	FRANKLIN	162	117
		CONTRACT NO. 78814		
		ILLINOIS FED. AID PROJECT		

STAGE II REMOVAL

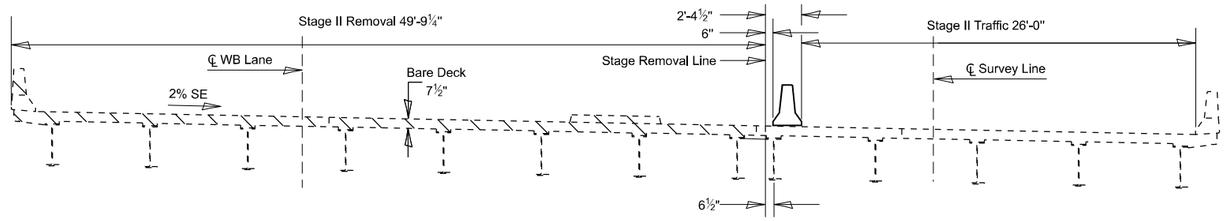

STAGE II CONSTRUCTION

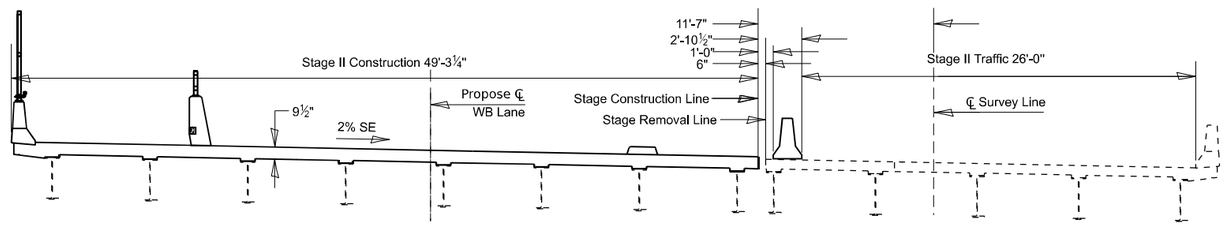

BILL OF MATERIAL

Item	Unit	Total
Temporary Concrete Barrier	Feet	250
Pinning Temporary Concrete Barrier	Each	12

STAGE V REMOVAL

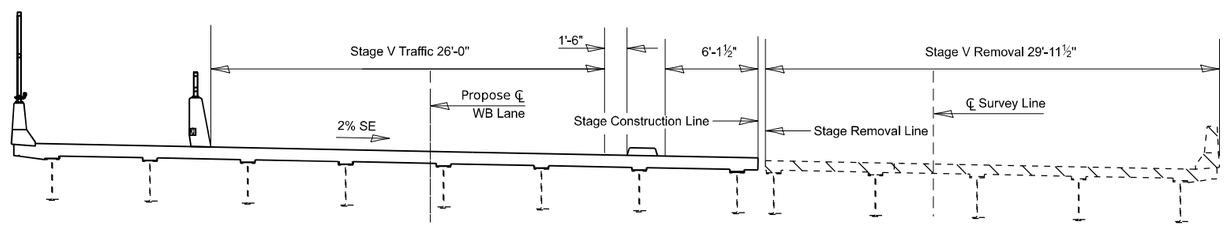

STAGE V CONSTRUCTION

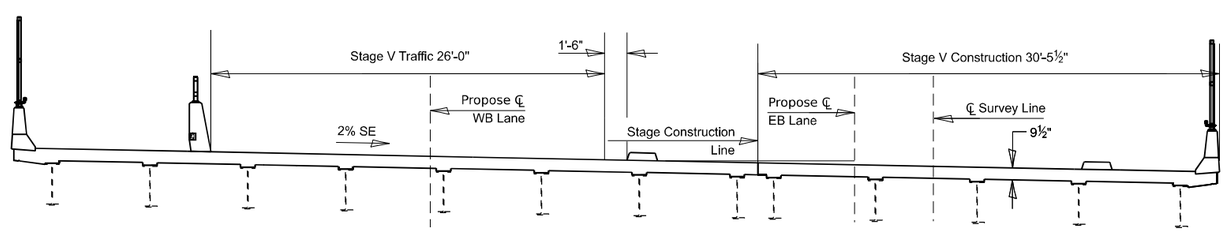

All Sections are looking East and
within limits of the Joint Reconstruction

STAGING DETAILS
IL. RTE. 149 OVER F.A.I. RTE. 57
F.A.I. ROUTE 57 SECTION 28-5(K-1)
FRANKLIN COUNTY
STATION 157+85.75 (F.A.I. RTE. 57)
STATION 694+22.53 (IL. RTE. 149)
STRUCTURE NO. 028-0039

MODEL: Staging Details-1 [Sheet]
FILE NAME: pw://ildot-pw.bentley.com:PWIDOT/Documents/IDOT Offices/District 9/ORD Projects/78814/CADData/CADsheets/D978814-SHTO-Structures.dgn

USER NAME = Zachary.Lomax	DESIGNED -	REVISED -	
	DRAWN -	REVISED -	
PLOT SCALE = 0.16666633 ' / in.	CHECKED -	REVISED -	
PLOT DATE = 5/16/2023	DATE -	REVISED -	

STATE OF ILLINOIS
DEPARTMENT OF TRANSPORTATION

STAGING DETAILS 1
STRUCTURE NO. 028-0039

SCALE: | SHEET 2 OF 21 SHEETS | STA. | TO STA.

F.A.P. RTE.	SECTION	COUNTY	TOTAL SHEETS	SHEET NO.
873	(28-5)K-1	FRANKLIN	162	118
		CONTRACT NO. 78814		
		ILLINOIS	FED. AID PROJECT	

SECTION THROUGH ABUTMENTS SHOWING JOINT RECONSTRUCTION

Looking East

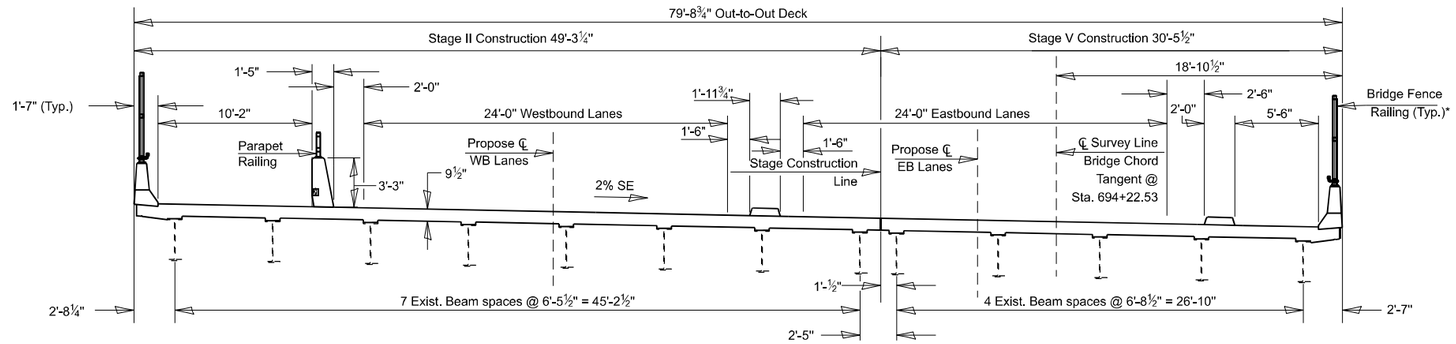

*Over Approach, Bicycle Railing will be Installed on Existing Parapets (Typ.)

SECTION THROUGH CONCRETE OVERLAY

Looking East

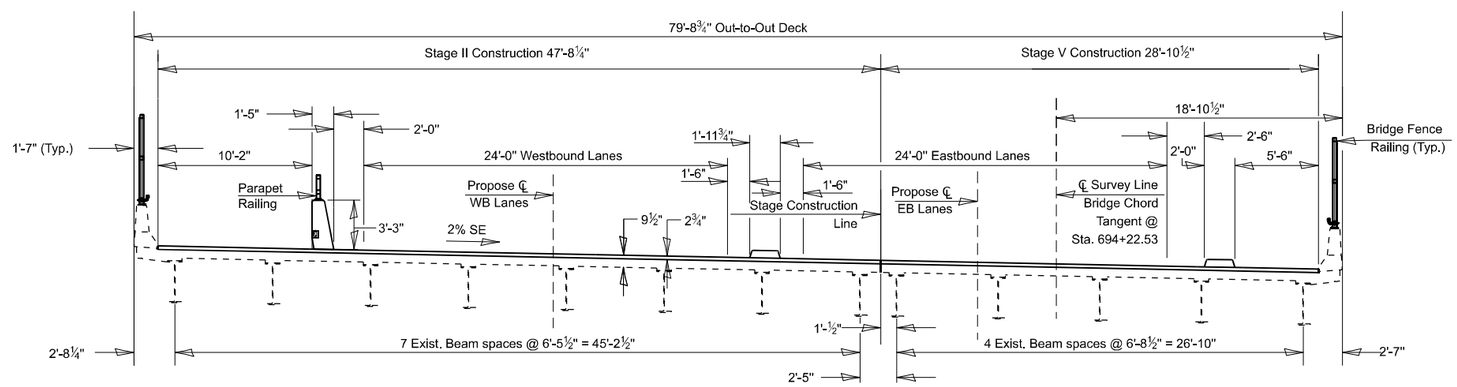

STAGING DETAILS
IL. RTE. 149 OVER F.A.I. RTE. 57
F.A.I. ROUTE 57 SECTION 28-5(K-1)
FRANKLIN COUNTY
STATION 157+85.75 (F.A.I. RTE. 57)
STATION 694+22.53 (IL. RTE. 149)
STRUCTURE NO. 028-0039

MODEL: Staging Details 2 [Sheet]
FILE NAME: pw://ildot-pw.bentley.com:PWIDOT/Documents/IDOT Offices/District 9/ORD Projects/78814/CADData/CADsheets/D978814-Sht0-Structures.dgn

USER NAME = Zachary.Lomax	DESIGNED -	REVISED -	STATE OF ILLINOIS DEPARTMENT OF TRANSPORTATION
	DRAWN -	REVISED -	
PLOT SCALE = 0.16666633 ' / in.	CHECKED -	REVISED -	
PLOT DATE = 5/16/2023	DATE -	REVISED -	

STAGING DETAILS 2
STRUCTURE NO. 028-0039

SCALE: | SHEET 3 OF 21 SHEETS | STA. | TO STA.

F.A.P. RTE.	SECTION	COUNTY	TOTAL SHEETS	SHEET NO.
873	(28-5)K-1	FRANKLIN	162	119
		CONTRACT NO. 78814		
	ILLINOIS	FED. AID PROJECT		

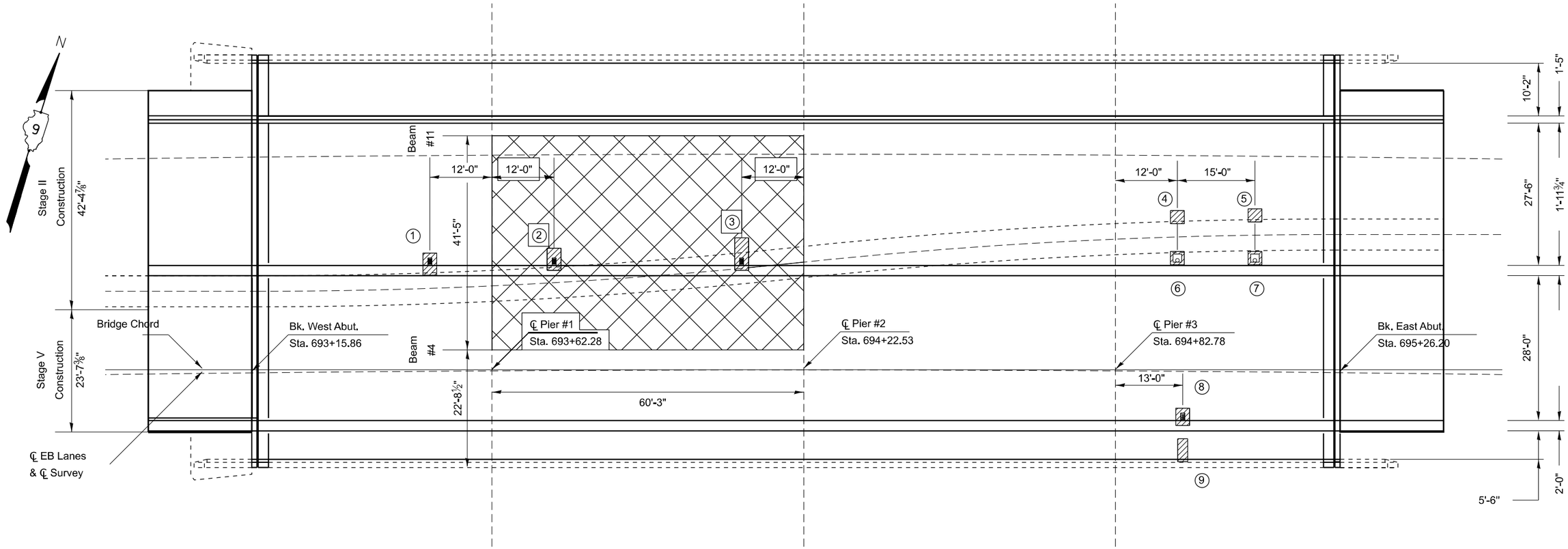

PLAN

NOTES:
The residential engineer will determine final patch locations and quantities in the field before bridge deck patching operations begin.

Area of deck repairs are estimates. The engineer shall show actual lovations for deck repairs on as-built plans.

FULL DEPTH DECK REPAIR				
NUMBER	LENGTH (FT)	WIDTH (FT)	DRAIN TYPE	AREA (SQ YD)
1	4'-3"	2'-8"	DS-11	1.3
2	4'-3"	2'-8"	DS-11	1.3
3	6'-3"	2'-8"	DS-11	1.9
4	2'-7"	2'-8"	REMOVAL	0.8
5	2'-7"	2'-8"	REMOVAL	0.8
6	2'-7"	2'-8"	6" Ø FLOOR DRAINS	0.8
7	2'-7"	2'-8"	6" Ø FLOOR DRAINS	0.8
8	3'-4"	2'-8"	DS-11	1.0
9	5'-4"	2'-0"	REMOVAL	1.2

DECK SLAB REPAIR (FULL DEPTH, TYPE I)

LIMITS OF PROTECTIVE SHIELD

BILL OF MATERIAL

PAY ITEM	UNIT	QUANTITY
Protective Shield	Sq Yd	277
Floor Drains	Each	2
Deck Slab Repair (Full Depth, Type 1)	Sq. Yd.	10

FULL DEPTH DECK PATCHES TO RELOCATE OR ELIMINATE SCUPPERS AND FLOOR DRAINS

MODEL: Drain Extensions Eliminations [Sheet]
FILE NAME: pw://ildot-pw.bentley.com:PWIDOT/Documents/IDOT Offices/District 9/ORD Projects/78814/CADData/CADsheets/D978814-Sht2-Structures.dgn

USER NAME = Zachary.Lomax	DESIGNED -	REVISED -
	DRAWN -	REVISED -
PLOT SCALE = 0.16666633 ' / in.	CHECKED -	REVISED -
PLOT DATE = 5/16/2023	DATE -	REVISED -

STATE OF ILLINOIS
DEPARTMENT OF TRANSPORTATION

DRAIN EXTENSIONS/ELIMINATIONS
STRUCTURE NO. 028-0039

SCALE: | SHEET 4 OF 21 SHEETS | STA. TO STA.

F.A.P. RTE.	SECTION	COUNTY	TOTAL SHEETS	SHEET NO.
873	(28-5)K-1	FRANKLIN	162	120
		CONTRACT NO. 78814		
	ILLINOIS	FED. AID PROJECT		

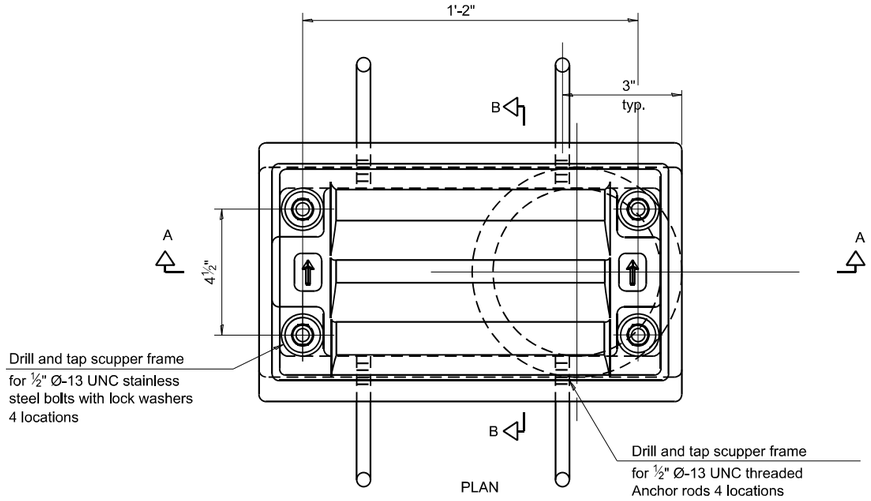

PLAN

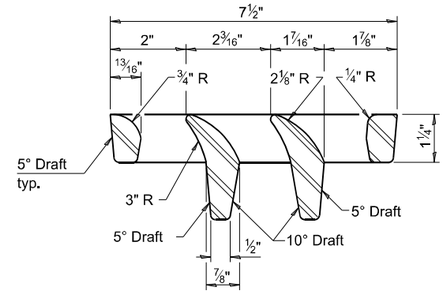

VANE GRATE DETAIL

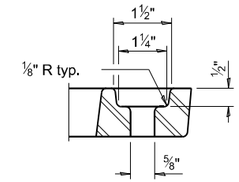

GRATE BOLT HOLE DETAIL

Notes:

All cast iron parts shall be gray iron conforming to the requirements of AASHTO M105, Class 35B and AASHTO M306.

Bolts, anchor rods, nuts and washers shall be according to ASTM A307 and shall be galvanized according to AASHTO M232. As an alternate stainless steel may be used.

Stainless steel hardware shall be according to Article 1006.29(d) of the Standard Specifications.

Structural steel weldments of equal sections and of the same configuration may be substituted for the cast iron scupper frames and downspouts; however, the scupper grates shall remain cast iron. Fillet or full penetration welds shall be used for the weldments. Details shall be submitted to the Engineer for approval.

Structural steel scupper frames and downspouts, when utilized, shall be galvanized according to AASHTO M111.

As an alternate, fiberglass may be used for downspouts according to ASTM D2996 with a short-time rupture strength hoop tensile stress of 30,000 psi min. in lieu of the cast iron or structural steel.

Exterior surfaces of downspouts and exterior exposed surfaces of the scupper frame below deck shall be treated as specified on sheet 7 of 21.

The Contractor shall take appropriate measures to assure that Protective Coat is not applied to the scupper.

Cost of the grate, frame, downspout, anchor rods, nuts and washers including complete installation of the scupper shall be paid for at the contract unit price for Drainage Scuppers, DS-11.

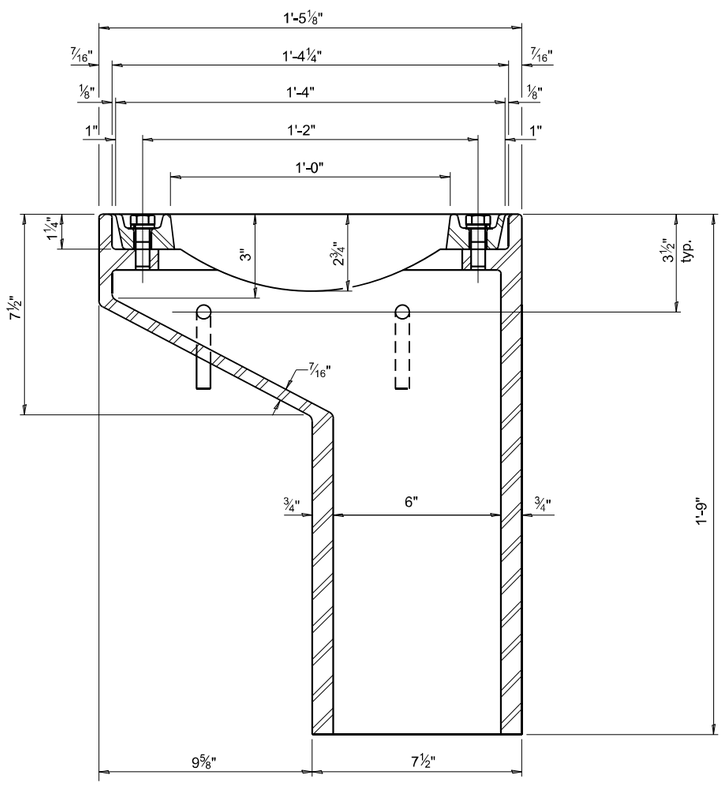

SECTION A-A

See sheet 3 of 19 for scupper location relative to parapet.

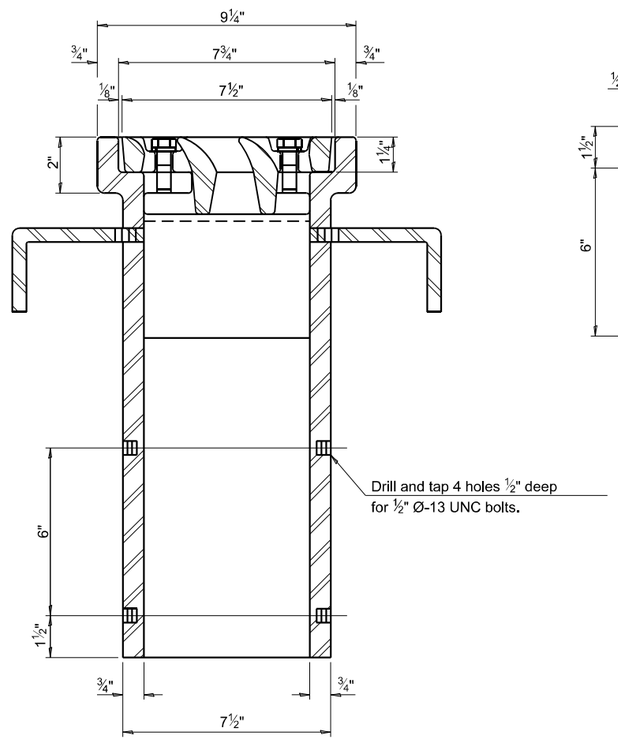

SECTION B-B

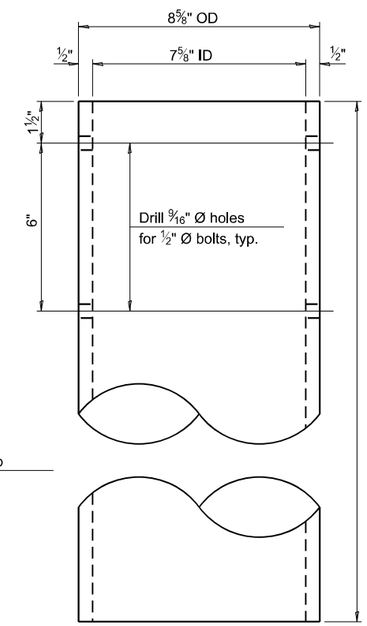

DOWNSPOUT

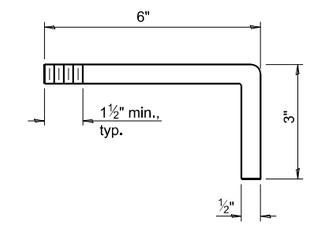

ANCHOR ROD DETAIL

BILL OF MATERIAL

ITEM	UNIT	QUANTITY
Drainage Scuppers, DS-11	Each	4

DS-11 2-1-2023

DRAINAGE SCUPPERS, DS-11
STRUCTURE NO. 028-0039

MODEL: Scupper Details [Sheet]
FILE NAME: pw://ildotcpw.bentley.com:PWIDOT/Documents/IDOT Offices/Districts 9/ORD Projects/78814/CADData/CADsheets/D978814-SHT0-Structures.dgn

USER NAME = Zachary.Lomax	DESIGNED -	REVISED -	
	DRAWN -	REVISED -	
PLOT SCALE = 0.16666633 ' / in.	CHECKED -	REVISED -	
PLOT DATE = 5/16/2023	DATE -	REVISED -	

STATE OF ILLINOIS
DEPARTMENT OF TRANSPORTATION

SCUPPER DETAILS
STRUCTURE NO. 028-0039

SCALE: | SHEET 5 OF 21 SHEETS | STA. | TO STA.

F.A.P. RTE.	SECTION	COUNTY	TOTAL SHEETS	SHEET NO.
873	(28-5)K-1	FRANKLIN	162	121

CONTRACT NO. 78814

ILLINOIS | FED. AID PROJECT

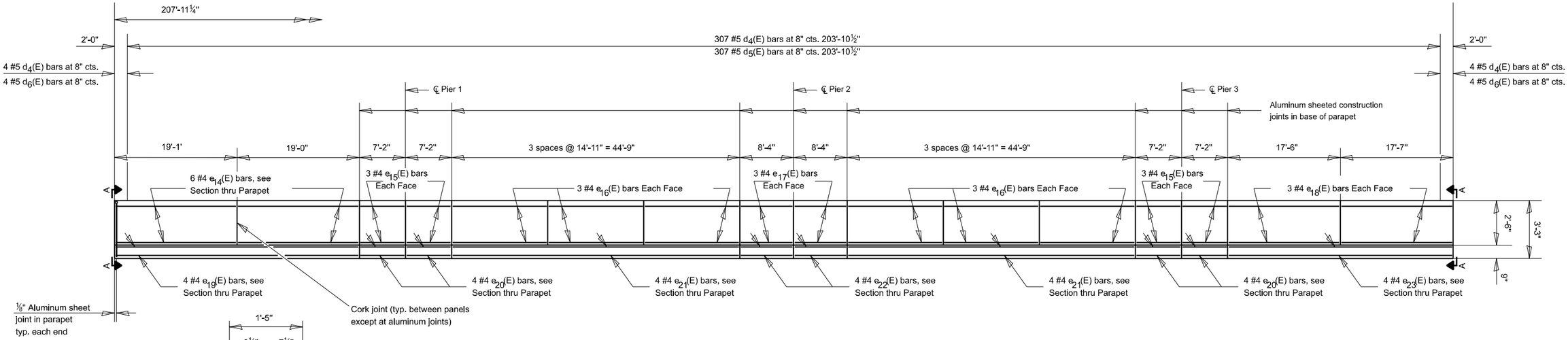

INSIDE ELEVATION OF PARAPET

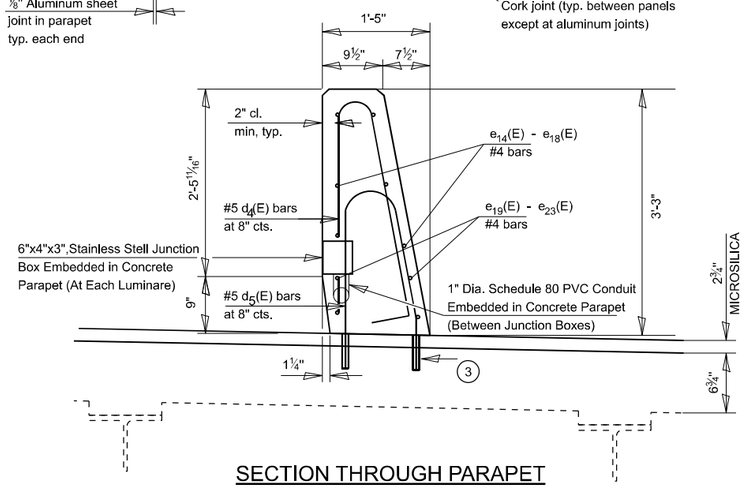

SECTION THROUGH PARAPET
(outside limits of joint reconstruction)

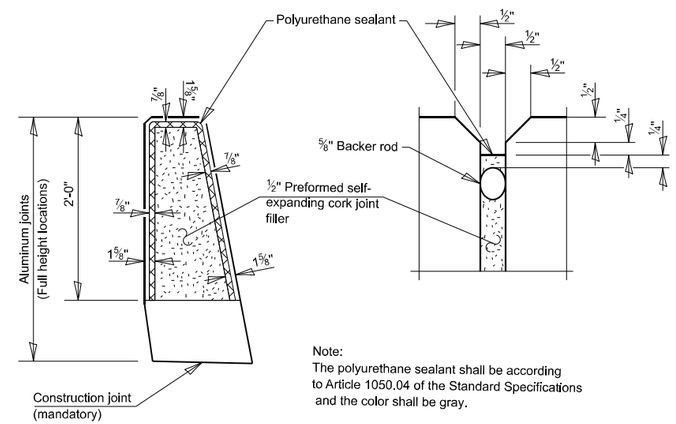

Note:
The polyurethane sealant shall be according to Article 1050.04 of the Standard Specifications and the color shall be gray.

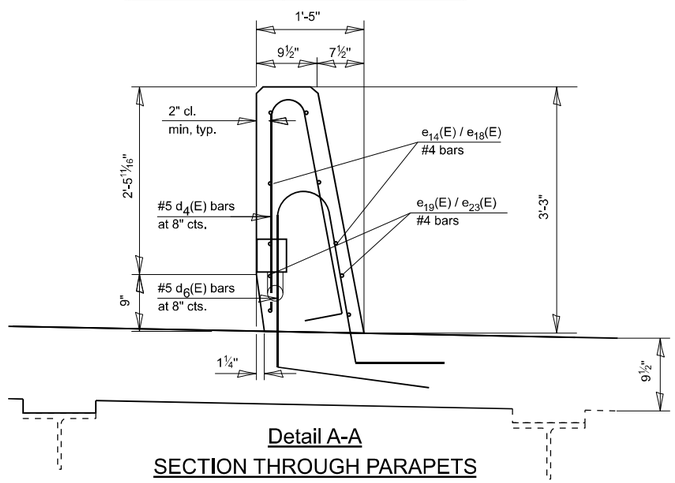

Detail A-A
SECTION THROUGH PARAPETS
(within joint reconstruction)

SUPER STRUCTURE BILL OF MATERIAL (New Parapet and New Medians within limits of Bridge)

Bar	No.	Size	Length	Shape
a_3(E)	32	#5	1'-6"	
b_7(E)	48	#5	28'-9"	
c_2(E)	836	#5	1'-3"	
c_3(E)	418	#5	1'-5"	
d_4(E)	315	#5	6'-5"	
d_5(E)	307	#5	6'-2"	
d_6(E)	8	#5	8'-2"	
e_{14}(E)	12	#4	18'-8"	
e_{15}(E)	24	#4	6'-10"	
e_{16}(E)	36	#4	14'-7"	
e_{17}(E)	12	#4	8'-0"	
e_{18}(E)	12	#4	17'-2"	
e_{19}(E)	4	#4	37'-8"	
e_{20}(E)	16	#4	6'-10"	
e_{21}(E)	8	#4	44'-5"	
e_{22}(E)	8	#4	8'-0"	
e_{23}(E)	4	#4	34'-8"	
* Protective Coat			Sq. Yd.	1,962
* Median Removal			Sq. Ft.	1,264
Concrete Superstructure			Cu. Yd.	40.8
** Bridge Deck Grooving			Sq. Yd.	1,615
Reinforcement Bars, Epoxy Coated			Pound	8,710
Bridge Deck Scarification, ¾"			Sq. Yd.	1,734
Bridge Deck Microsilica Concrete Overlay, 2¾"			Sq. Yd.	1,734

*Quantites Over Joint Reconstruction Included
**Quantites Include Approach Slabs and Joint Reconstruction

(Sheet 1 of 2)

MODEL: Superstructure Details-1 [Sheet]
FILE NAME: pw://ildot-pw.bentley.com:PWIDOT/Documents/IDOT Offices/District 9/ORD Projects/78814/CADData/CADsheets/D978814-SHTO-Structures.dgn

USER NAME = Zachary.Lomax	DESIGNED -	REVISED -	
	DRAWN -	REVISED -	
PLOT SCALE = 0.16666633 ' / in.	CHECKED -	REVISED -	
PLOT DATE = 5/16/2023	DATE -	REVISED -	

STATE OF ILLINOIS
DEPARTMENT OF TRANSPORTATION

SUPERSTRUCTURE DETAILS 1
STRUCTURE NO. 028-0039

SCALE: | SHEET 6 OF 21 SHEETS | STA. | TO STA.

F.A.P. RTE.	SECTION	COUNTY	TOTAL SHEETS	SHEET NO.
873	(28-5)K-1	FRANKLIN	162	122
		CONTRACT NO. 78814		
		ILLINOIS	FED. AID PROJECT	

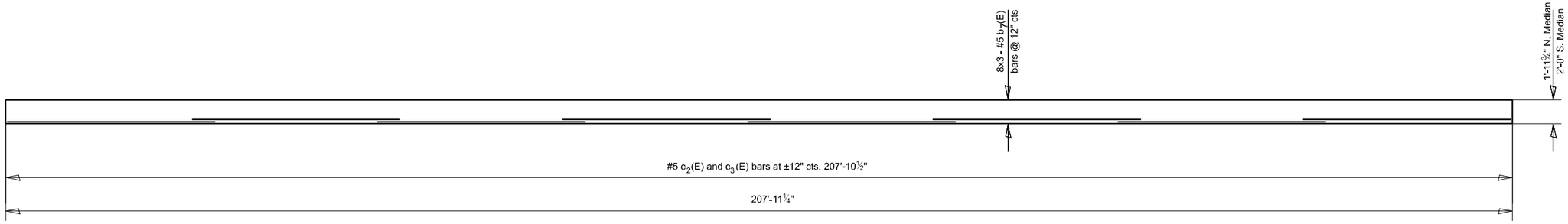

PLAN VIEW OF MEDIANS

Min Bar Lap
#5 - 3'-2"

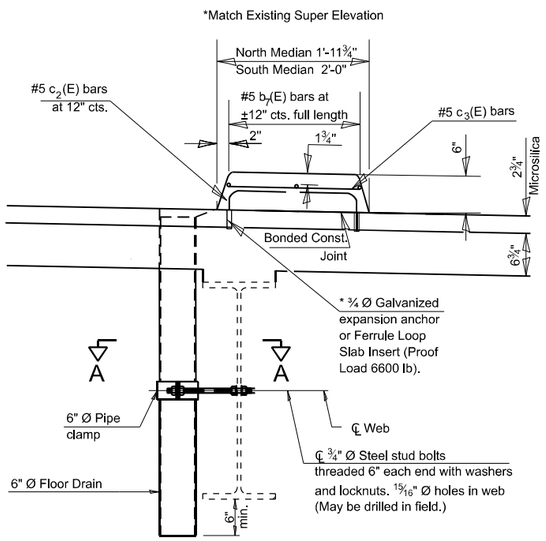

* The cost of expansion anchors/inserts is included in the cost of Reinforcement Bars, Epoxy Coated.

**Full width along joint - backer rod not required.

SECTION THROUGH MEDIAN
(Showing Floor Drain)

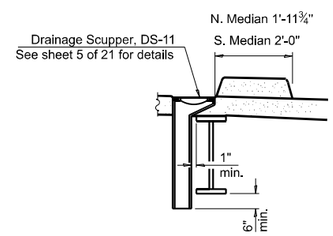

SECTION B-B

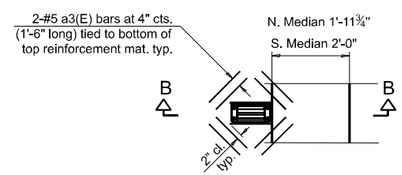

PLAN

Note:
Cut longitudinal reinforcement to clear drainage scuppers.

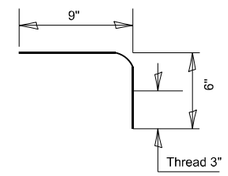

BAR c_2(E)

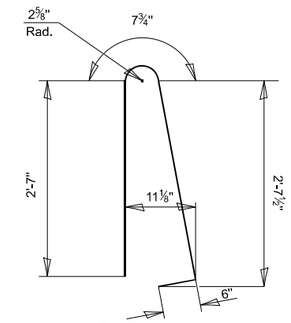

BAR d_4(E)

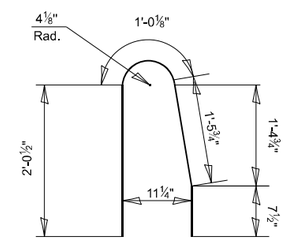

BAR d_5(E)

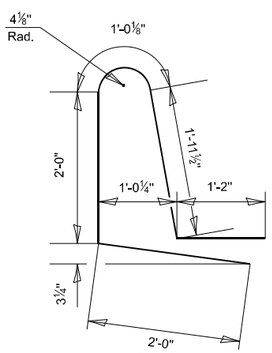

BAR d_6(E)

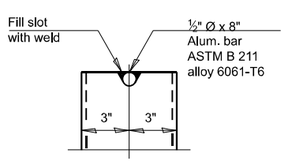

ALUMINUM TUBE

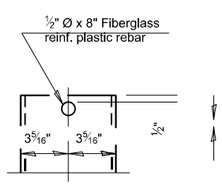

FIBERGLASS PIPE

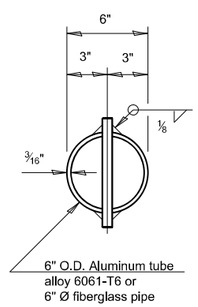

TOP PLAN
(Showing aluminum tube)

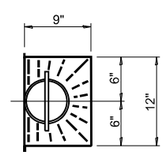

TOP PLAN

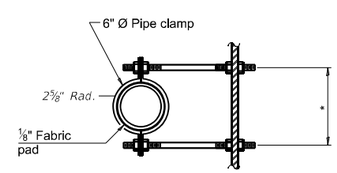

SECTION A-A

*Dimension as required by pipe clamp

NOTES:

1. Bars Indicated thus: 8x3 -#5 etc. indicates 3 lines of #5 bars with 8 lengths per line.
2. Work this sheet with S5
3. Drill and set #5 d_5(E) bar according to Articale 509.06 of the Standard Specifications. Drilled holes shall be 6". Contractor shall take all necessary precautions to prevent drilled hold interference with deck reinforcement bars. Locate lonitudinal bars to miss drilled locations. Locate drilled holes to miss transverse bars in deck.
4. Fiberglass pipe shall conform to ASTM D2996, with short-time rupture strength hoop tensile stress of 30,000 p.s.i. minimum.
5. The exterior surfaces of the floor drains and drainage scuppers shall be painted according to Article 506 with the finish coat as specified. The exterior surfaces of the drains shall be cleaned according to the Society of Protective Coatings's Spec. SSPC-SP1 prior to painting.
6. The top portion of aluminum floor drains shall be coated to minimize reaction with wet concrete.
7. The clamping device shall be galvanized according to AASHTO M 232. Cost of clamping device included
with Floor Drains.
8. The ⅛" aluminum sheet shall be ASTM B 209 alloy 3003-H14 and coated to minimize reaction with wet concrete. Cost included with Concrete Superstructure.

(Sheet 2 of 2)

MODEL: Superstructure Details 3 [Sheet]
FILE NAME: pw://ildot-pw.bentley.com:PWIDOT/Documents/IDOT Offices/District 9/ORD Projects/78814/CADData/CADsheets/D978814-Sht5-Structures.dgn

USER NAME = Zachary.Lomax	DESIGNED -	REVISED -	
	DRAWN -	REVISED -	
PLOT SCALE = 0.16666633 ' / in.	CHECKED -	REVISED -	
PLOT DATE = 5/16/2023	DATE -	REVISED -	

STATE OF ILLINOIS
DEPARTMENT OF TRANSPORTATION

SUPERSTRUCTURE DETAILS 2
STRUCTURE NO. 028-0039

SCALE: | SHEET 7 OF 21 SHEETS | STA. | TO STA.

F.A.P. RTE.	SECTION	COUNTY	TOTAL SHEETS	SHEET NO.
873	(28-5)K-1	FRANKLIN	162	123
		CONTRACT NO. 78814		
		ILLINOIS	FED. AID PROJECT	

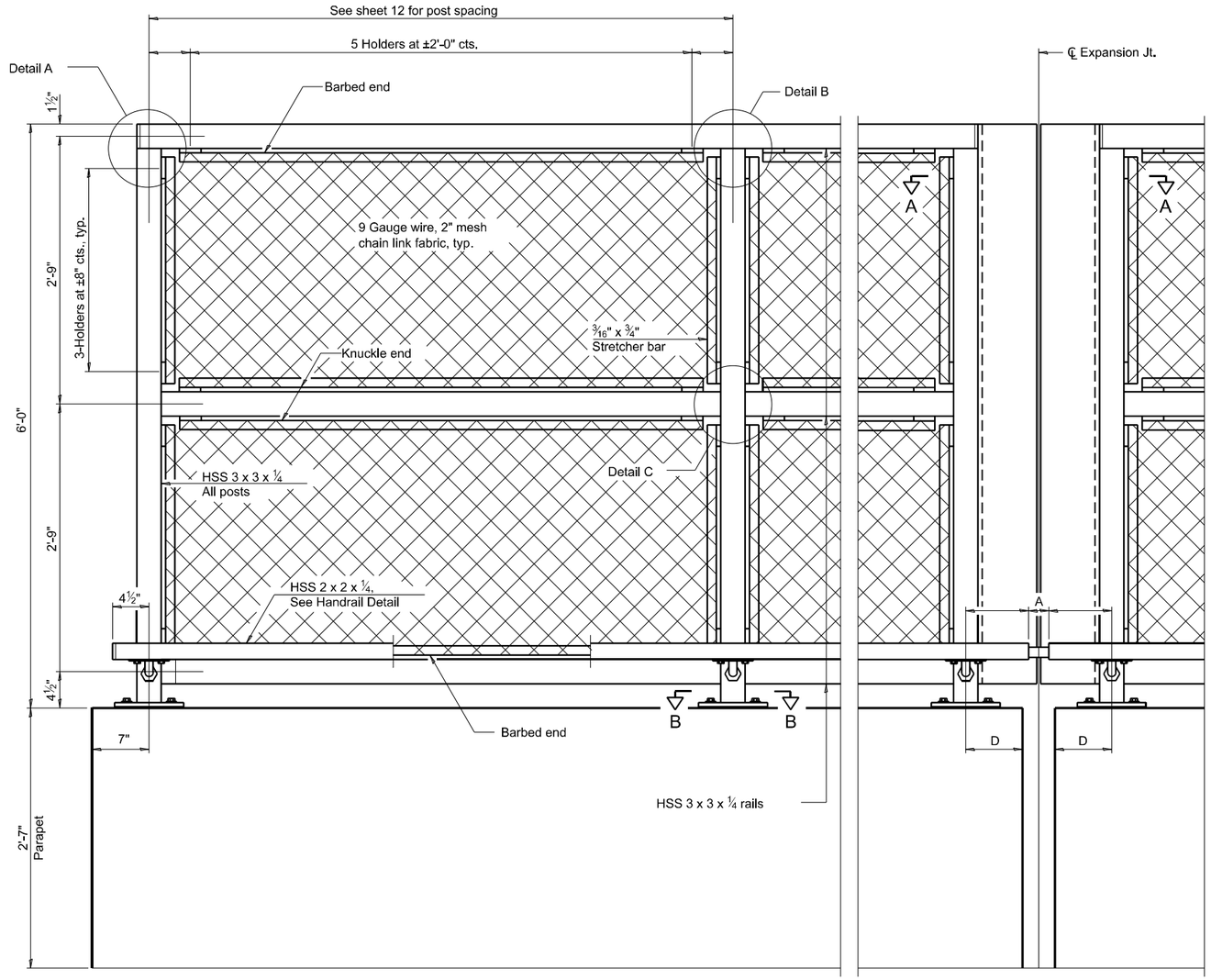

ELEVATION BRIDGE FENCE RAILING

(Inside face)

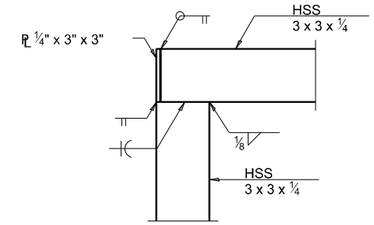

DETAIL A

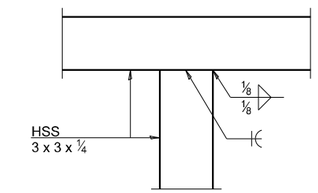

DETAIL B

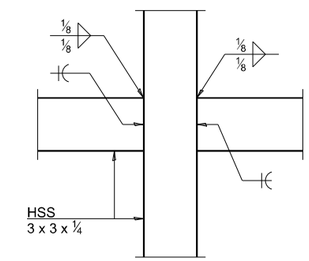

DETAIL C

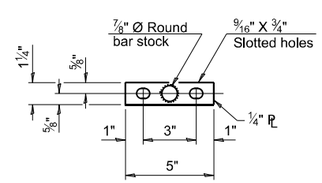

VIEW C-C

(Handrail)

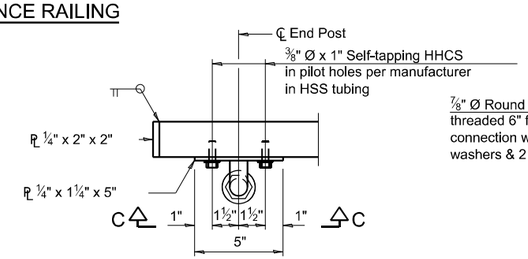

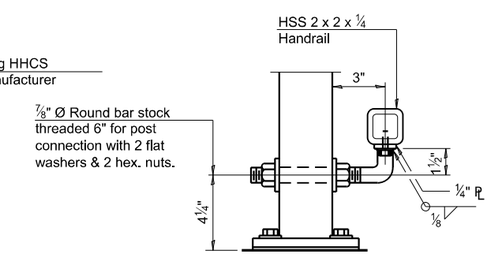

HANDRAIL DETAIL

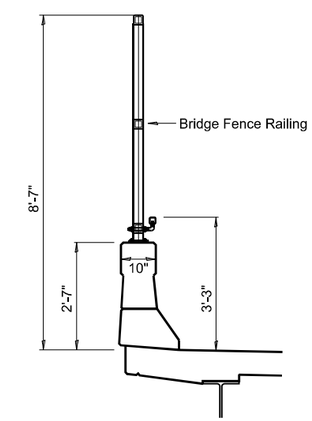

SECTION THROUGH DECK

(At Joint Reconstruction)

RAILING CRITERIA

NCHRP 350 Test Level	4
Max Post Spacing	10'-0"
Railing Weight (plf)	50

R-28 Modified 9-1-2022

(Sheet 1 of 2)

BRIDGE FENCE RAILING
STRUCTURE NO. 028-0039

MODEL: Rail Design[Sheet]
FILE NAME: pw://ildotpw.bentley.com:PWIDOT/Documents/IDOT Offices/District 9/ORD Projects/78814/CADData/CADsheets/D978814-SHT-Structures.dgn

USER NAME = Zachary.Lomax	DESIGNED -	REVISED -	
	DRAWN -	REVISED -	
PLOT SCALE = 0.16666633 ' / in.	CHECKED -	REVISED -	
PLOT DATE = 5/16/2023	DATE -	REVISED -	

STATE OF ILLINOIS
DEPARTMENT OF TRANSPORTATION

BRIDGE FENCE RAILING DETAILS 1
STRUCTURE NO. 028-0039

SCALE: SHEET 8 OF 21 SHEETS STA. TO STA.

F.A.P. RTE.	SECTION	COUNTY	TOTAL SHEETS	SHEET NO.
873	(28-5)K-1	FRANKLIN	162	124
		CONTRACT NO. 78814		
		ILLINOIS	FED. AID PROJECT	

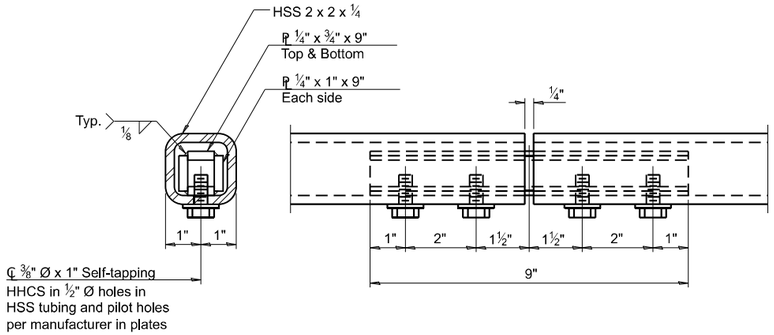

AT HANDRAIL

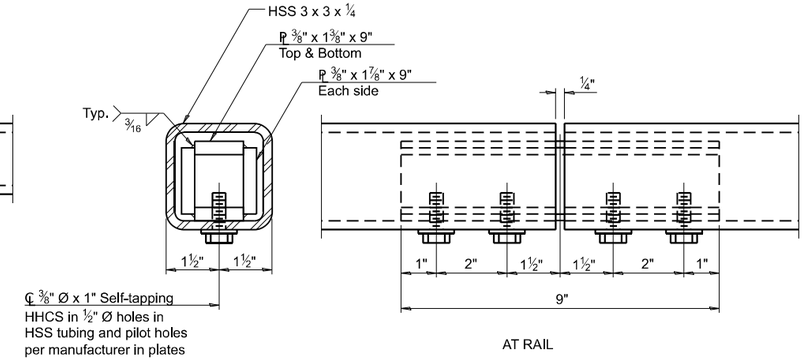

AT RAIL

MATERIAL SPLICE

Notes:

Place reinforcement bars to miss anchor rod locations.

CVN testing is not required for the HSS tubing used in the Bridge Fence Railing.

All HSS tubing used for the Handrail shall be CVN tested according to Article 1006.34(b) of the Standard Specifications.

All heavy hex nuts shall be according to ASTM A 563 grade DH.

All fully threaded anchor rods shall be ASTM F1554 grade 105.

The post base plate shall be fastened to the curb snug tight and given an additional ⅛" turn.

Rail splice inserts may be built out of bent plates of the same thicknesses and outside geometry limits as the 4 plate rail splice inserts shown.

When the contract specifies a galvanized railing, all steel rail elements shall be galvanized according to Article 509.05 of the Standard Specifications. When the contract specifies a painted railing, all posts, rail, splices, anchor devices and plates of the railing shall be painted according to the paint system for railings as specified in the General Notes.

See sheet 13 of 21 for dimensions of concrete openings at expansion joints.

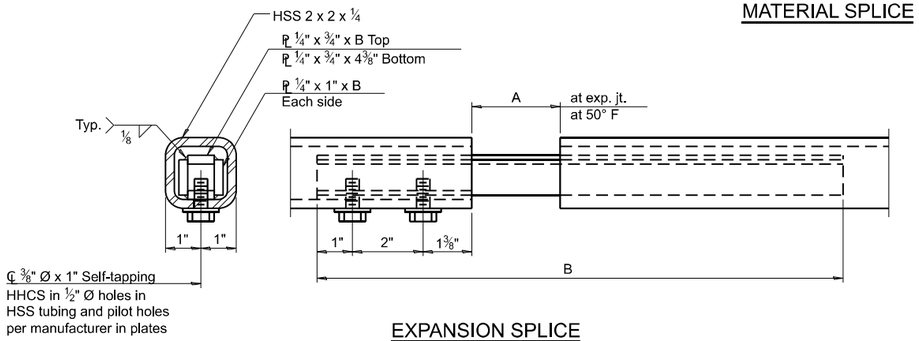

EXPANSION SPLICE

(Weld bottom plate on bolt side)

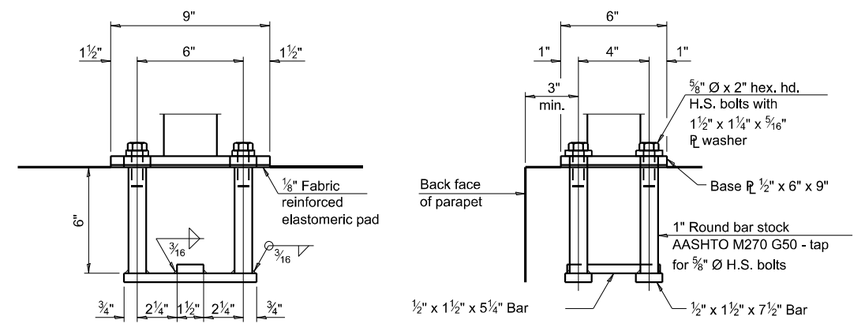

ANCHORAGE ASSEMBLY

The Bridge Fence Railing fasteners for end posts near expansion joints may need to be installed prior to installing the bent plates.

In lieu of the cast-in-place anchor device shown, the Contractor has the option of drilling and setting ⅝" Ø fully threaded anchor rods with the same plate washers as specified above and heavy hex lock nuts according to Article 509.06 of the Standard Specifications. Embedment shall be according to the manufacturer's specifications.

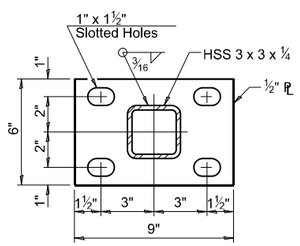

SECTION B-B

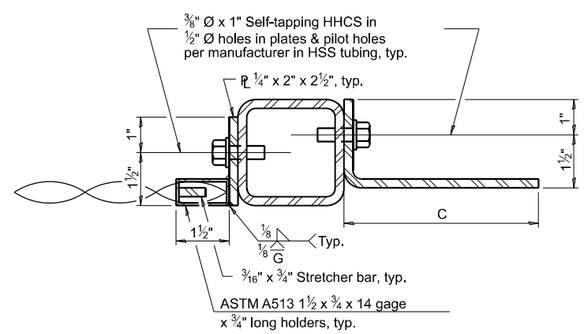

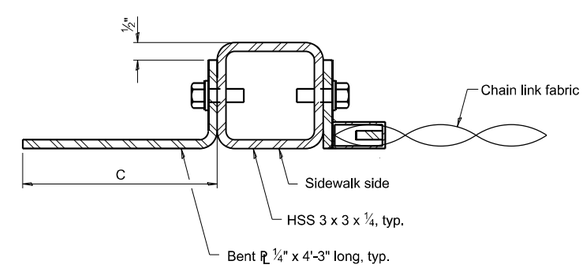

SECTION A-A

TABLE OF DIMENSIONS

Location	T	A	B	C	D
Over Strip Seal Jt.	≤4"	2½"	1'-5⅞"	7¼"	7"
Over Finger or Modular Jt.	≤9½"	5½"	1'-11⅝"		
Over Finger or Modular Jt.	≤15"	8¼"	2'-5⅛"		

T= ; total movement based on total temperature range from -20°F to 120°F along centerline of roadway at expansion joint.

BILL OF MATERIAL

Item	Unit	Quantity
Bridge Fence Railing	Foot	416

R-28

9-1-2022

(Sheet 2 of 2)

BRIDGE FENCE RAILING
STRUCTURE NO. 028-0039

MODEL: Rail Design 1 [Sheet]
FILE NAME: pw://idot-pw.bentley.com:PWIDOT/Documents/IDOT Offices/District 9/ORD Projects/78814/CADData/CADsheets/D978814-Sht0-Structures.dgn

USER NAME = Zachary.Lomax	DESIGNED -	REVISED -	
	DRAWN -	REVISED -	
PLOT SCALE = 0.16666633 ' / in.	CHECKED -	REVISED -	
PLOT DATE = 5/16/2023	DATE -	REVISED -	

STATE OF ILLINOIS
DEPARTMENT OF TRANSPORTATION

BRIDGE FENCE RAILING DEATILS 2
STRUCTURE NO. 028-0039

SCALE: | SHEET 9 OF 21 SHEETS | STA. | TO STA.

F.A.P. RTE.	SECTION	COUNTY	TOTAL SHEETS	SHEET NO.
873	(28-5)K-1	FRANKLIN	162	125

CONTRACT NO. 78814

ILLINOIS | FED. AID PROJECT

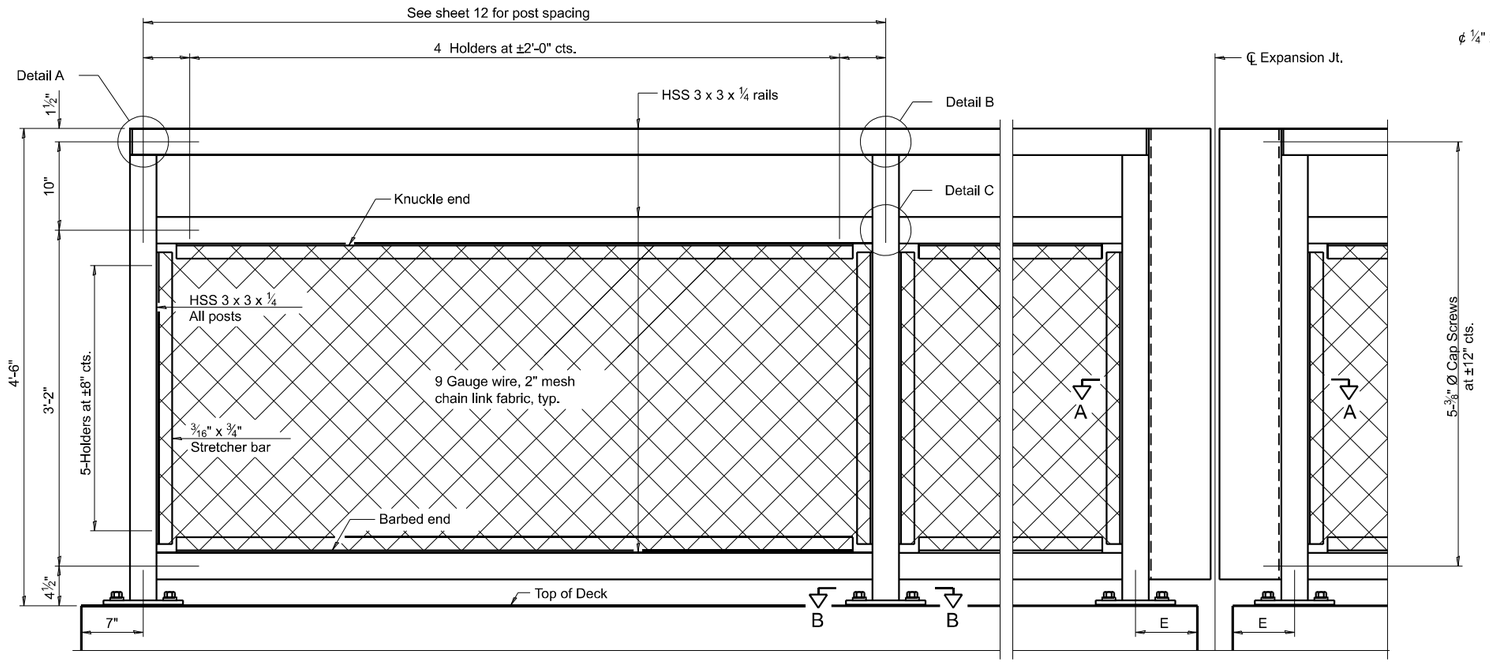

ELEVATION BICYCLE RAILING
(Inside face)

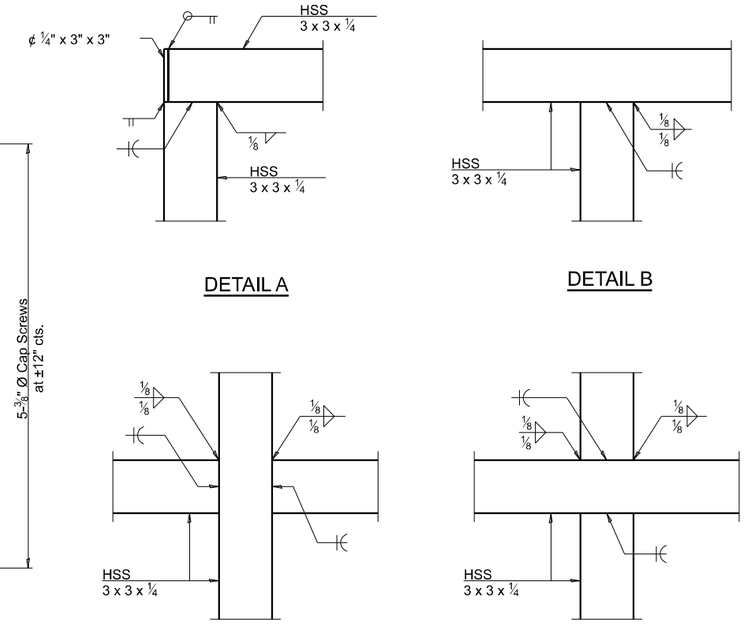

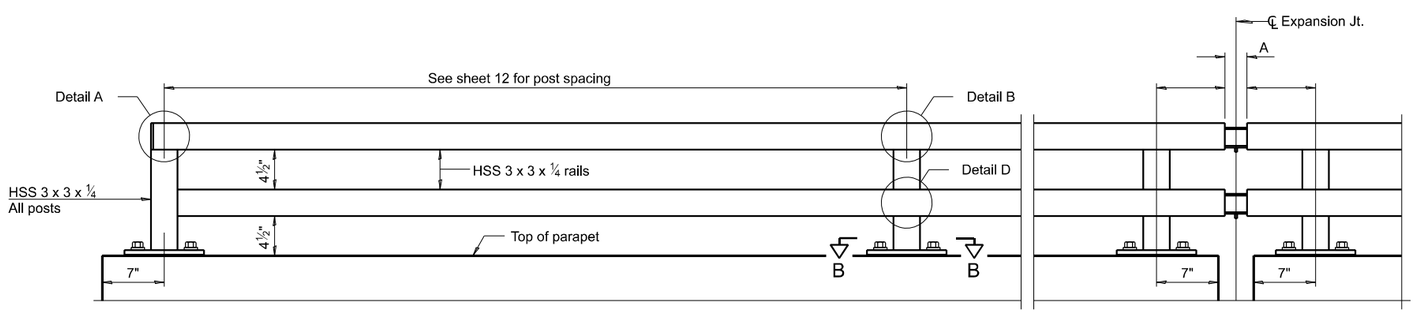

ELEVATION PARAPET RAILING
(Inside face)

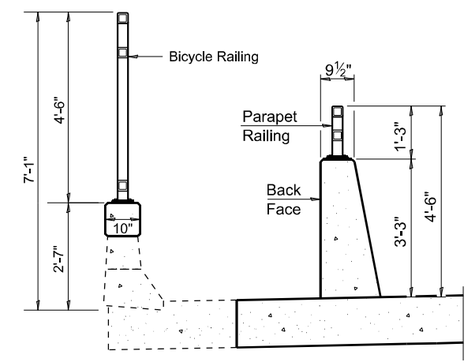

SECTION THRU APPROACH SLAB

RAILING CRITERIA

MASH 2016 Test Level	4
Parapet Railing Weight (plf)	25
Bicycle Railing Weight (plf)	50
Max Post Spacing	10'-0"

R-29 Modified 9-1-2022

(Sheet 1 of 2)

BICYCLE RAILING AND PARAPET RAILING
STRUCTURE NO. 028-0039

MODEL: Parapet Railing [Sheet]
FILE NAME: pw://ildot-pw.bentley.com:PWIDOT/Documents/IDOT Offices/District 9/ORD Projects/78814/CADData/CADsheets/D978814-Sht0-Structures.dgn

USER NAME = Zachary.Lomax	DESIGNED -	REVISED -	
	DRAWN -	REVISED -	
PLOT SCALE = 0.16666633 ' / in.	CHECKED -	REVISED -	
PLOT DATE = 5/16/2023	DATE -	REVISED -	

STATE OF ILLINOIS
DEPARTMENT OF TRANSPORTATION

PARAPET RAILING DETAILS 1
STRUCTURE NO. 028-0039

SCALE: SHEET 10 OF 21 SHEETS STA. TO STA.

F.A.P. RTE.	SECTION	COUNTY	TOTAL SHEETS	SHEET NO.
873	(28-5)K-1	FRANKLIN	162	126
		CONTRACT NO. 78814		
	ILLINOIS	FED. AID PROJECT		

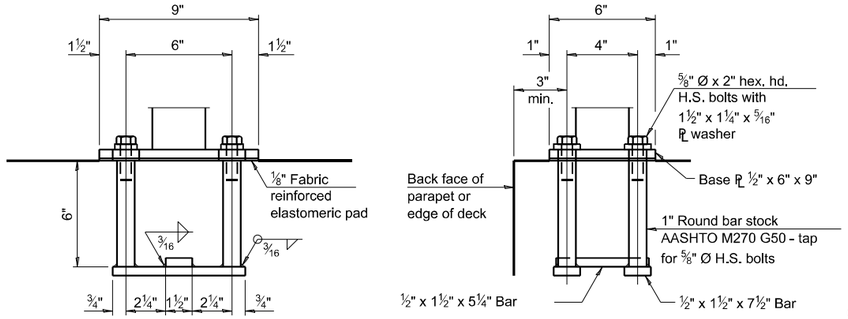

ANCHORAGE ASSEMBLY

The Bicycle Railing fasteners for end posts near expansion joints may need to be installed prior to installing the bent plates.

In lieu of the cast-in-place anchor device shown, the Contractor has the option of drilling and setting ⅝" Ø fully threaded anchor rods with the same plate washers as specified above and heavy hex lock nuts according to Article 509.06 of the Standard Specifications. Embedment shall be according to the manufacturer's specifications.

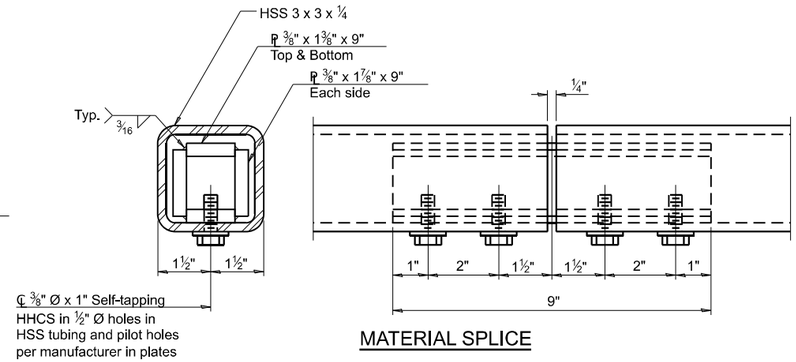

MATERIAL SPLICE

Notes:

Place reinforcement bars to miss anchor rod locations.

CVN testing is not required for the HSS tubing used in the Bicycle Railing.

All HSS tubing used for the Parapet Railing shall be CVN tested according to Article 1006.34(b) of the Standard Specifications.

All HSS tubing used for the Parapet Railing shall be ASTM A500 grade C.

All base plates used for the Paraper Railing shall be AASHTO M270 grade 50.

All heavy hex nuts shall be according to ASTM A 563 grade DH.

All fully threaded anchor rods shall be ASTM F1554 grade 105.

The post base plate shall be fastened to the curb snug tight and given an additional ⅛" turn.

Rail splice inserts may be built out of bent plates of the same thicknesses and outside geometry limits as the 4 plate rail splice inserts shown.

When the contract specifies a galvanized railing, all steel rail elements shall be galvanized according to Article 509.05 of the Standard Specifications. When the contract specifies a painted railing, all posts, rail, splices, anchor devices and plates of the railing shall be painted according to the paint system for railings as specified in the General Notes.

See sheet 13 of 21 for dimensions of concrete openings at expansion joints.

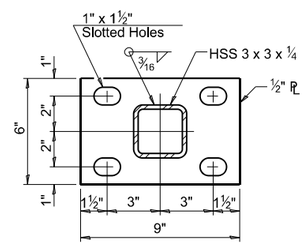

SECTION B-B

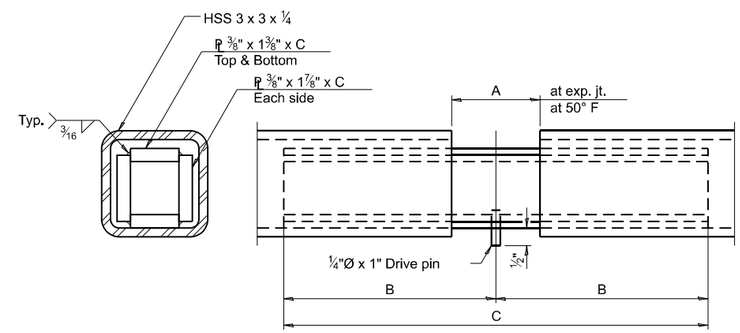

EXPANSION SPLICE

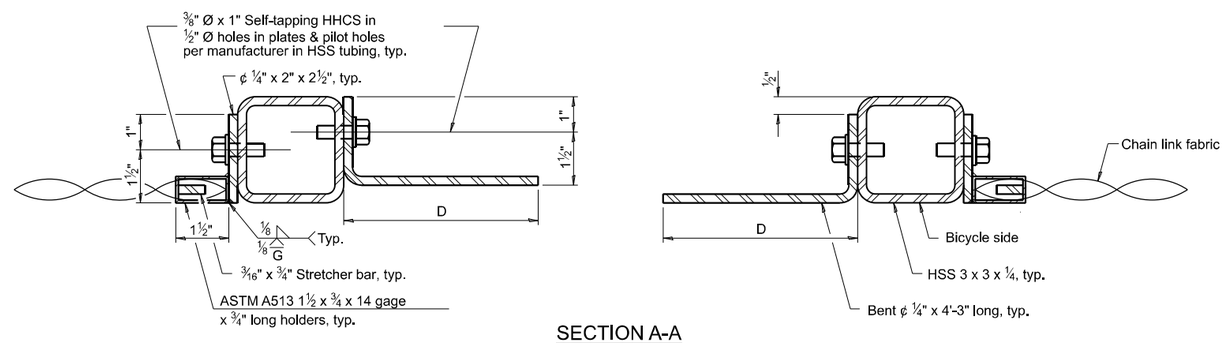

SECTION A-A

TABLE OF DIMENSIONS

Location	T	A	B	C	D	E
Over Strip Seal Jt.	≤4"	2½"	1'-2"	2'-4"	7¼"	7"
Over Finger or Modular Jt.	≤9½"	5½"	1'-7¾"	3'-3½"		
Over Finger or Modular Jt.	≤15"	8¼"	2'-1¼"	4'-2½"		

T= ; total movement based on total temperature range from -20°F to 120°F along centerline of roadway at expansion joint.

BILL OF MATERIAL

Item	Unit	Quantity
Bicycle Railing	Foot	44
Parapet Railing	Foot	250

R-29 9-1-2022

(Sheet 2 of 2)

BICYCLE RAILING AND PARAPET RAILING
STRUCTURE NO. 028-0039

MODEL: Parapet Railing-1 [Sheet]
FILE NAME: pw://ildot-pw.bentley.com:PWIDOT/Documents/IDOT Offices/District 9/ORD Projects/78814/CADData/CADsheets/D978814-Sht0-Structures.dgn

USER NAME = Zachary.Lomax	DESIGNED -	REVISED -	
	DRAWN -	REVISED -	
PLOT SCALE = 0.16666633 ' / in.	CHECKED -	REVISED -	
PLOT DATE = 5/16/2023	DATE -	REVISED -	

STATE OF ILLINOIS
DEPARTMENT OF TRANSPORTATION

PARAPET RAILING DETAILS 2
STRUCTURE NO. 028-0039

SCALE: SHEET 11 OF 21 SHEETS STA. TO STA.

F.A.P. RTE.	SECTION	COUNTY	TOTAL SHEETS	SHEET NO.
873	(28-5)K-1	FRANKLIN	162	127
		CONTRACT NO. 78814		
		ILLINOIS	FED. AID PROJECT	

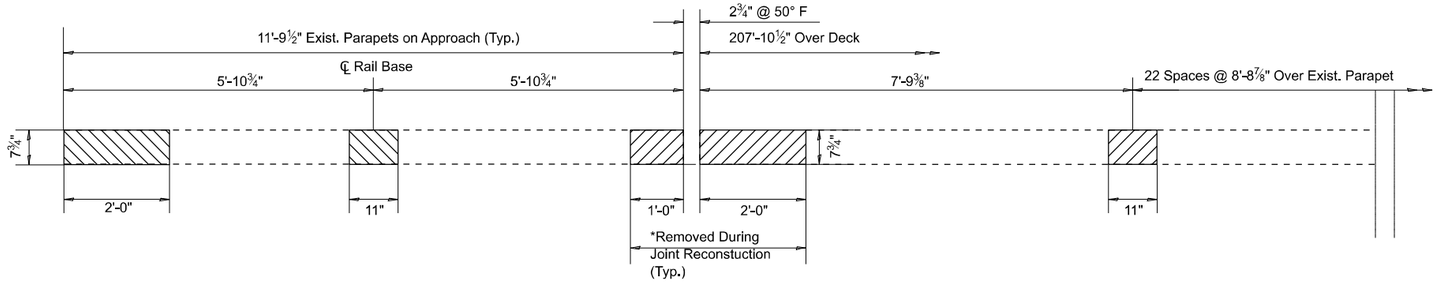

PLAN VIEW OF CONCRETE REMOVAL OF EXIST. PARAPETS (typ.)

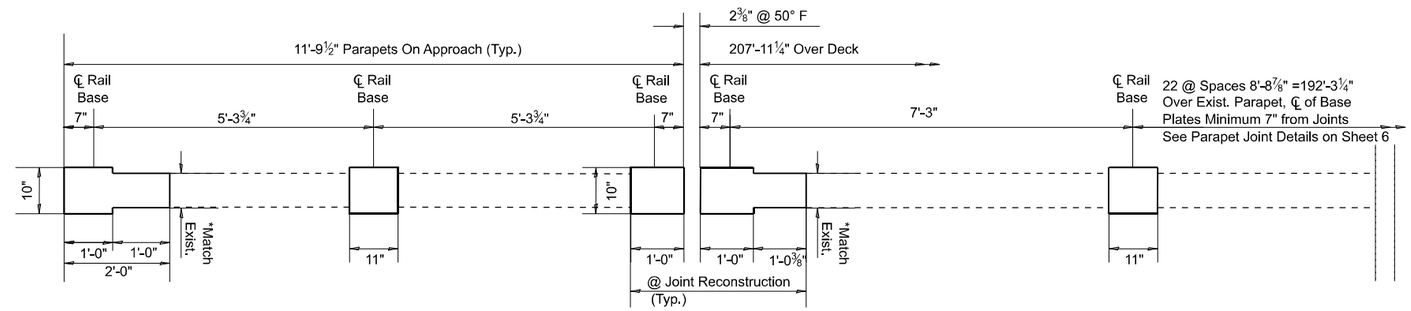

PLAN VIEW SHOWING NEW CONCRETE FOR BRIDGE FENCE RAILING POSTS (Typ.)

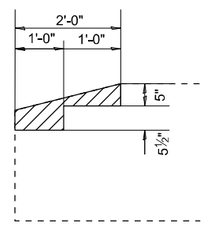

CONCRETE REMOVAL FOR RAIL BASE @ ENDS OF EXIST. PARAPETS (Typ.)

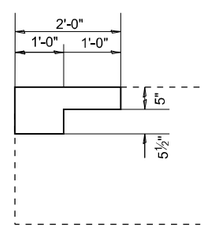

CONCRETE FOR RAIL BASE @ ENDS OF EXIST. PARAPETS (Typ.)

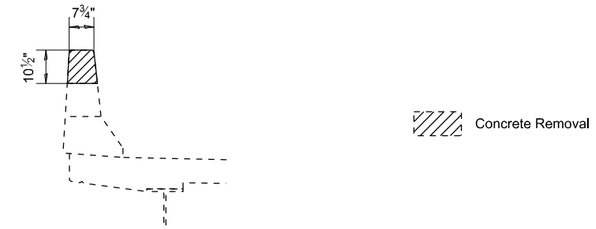

SECTION THRU EXIST. PARAPETS @ PROPOSED RAIL BASE (Typ.)

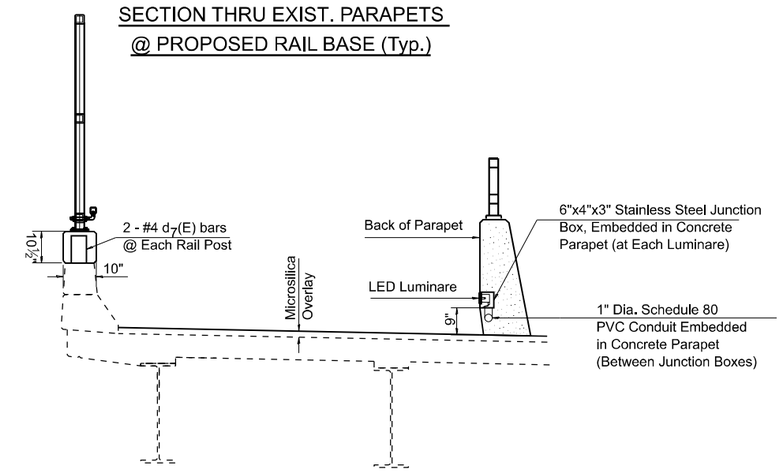

SECTION THRU PARAPETS (Outside Limits of Joint Reconstruction)

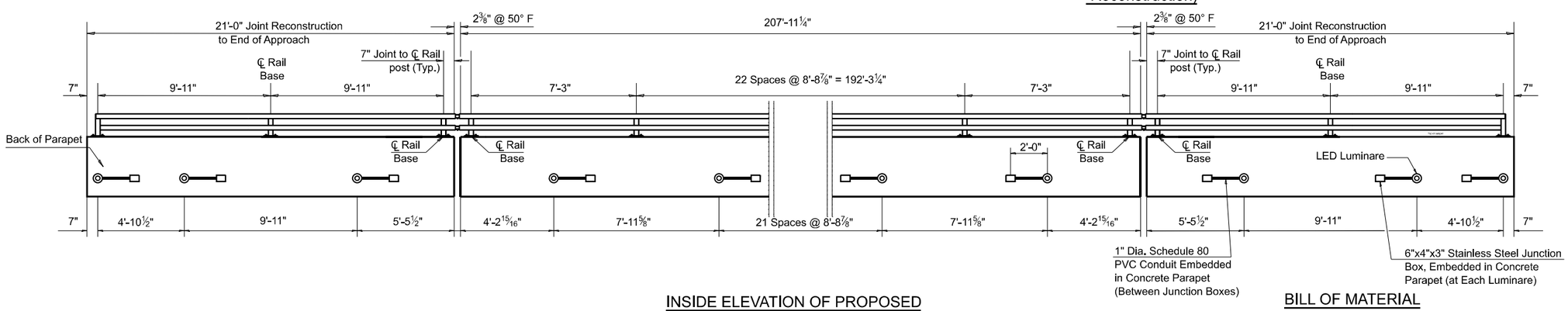

INSIDE ELEVATION OF PROPOSED PARAPET (Facing South)

BILL OF MATERIAL

(Modifications to Exist. Parapets to AccomodateBridge Fence Railing/Bicycle Railing and Lighting in New Parapet)

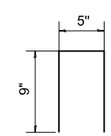

Bar d7(E)

Bar	Number	Size	Length	Shape
d7(E)	124	#4	1'-11"	⊓

	Item	Unit	Quantity
*	Concrete Removal	Cu. Yd.	1.1
*	Concrete Superstructure	Cu. Yd.	1.4
	Reinforcement Bars, Epoxy Coated	Pounds	160
	Parapet Mounted Bridge Lighting System	Lump Sum	1

*Quantites Over Approach Slabs Included

MODEL: Rail Design-2 [Sheet]
FILE NAME: pw://ildot-pw.bentley.com:PWIDOT/Documents/IDOT Offices/District 9/ORD Projects/78814/CADData/CADsheets/D978814-Sht0-Structures.dgn

USER NAME = Zachary.Lomax	DESIGNED -	REVISED -	
	DRAWN -	REVISED -	
PLOT SCALE = 0.16666633 ' / in.	CHECKED -	REVISED -	
PLOT DATE = 5/16/2023	DATE -	REVISED -	

STATE OF ILLINOIS
DEPARTMENT OF TRANSPORTATION

PARAPET AND RAIL DETAILS 1
STRUCTURE NO. 028-0039

SCALE: | SHEET 12 OF 21 SHEETS | STA. | TO STA.

F.A.P. RTE.	SECTION	COUNTY	TOTAL SHEETS	SHEET NO.
873	(28-5)K-1	FRANKLIN	162	128
		CONTRACT NO. 78814		
		ILLINOIS	FED. AID PROJECT	

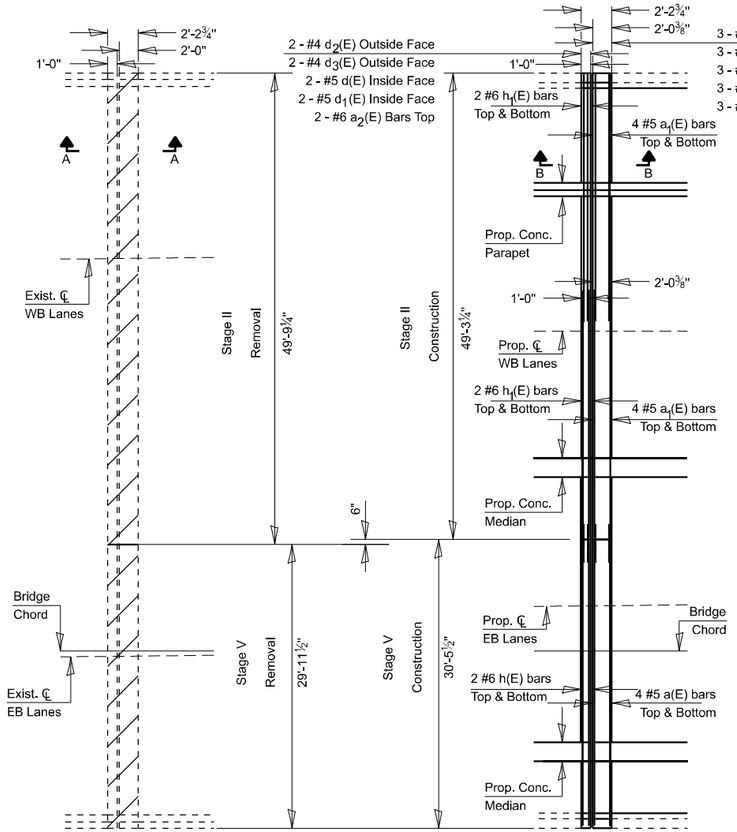

SECTION @ ABUTMENTS
SHOWING CONCRETE REMOVAL

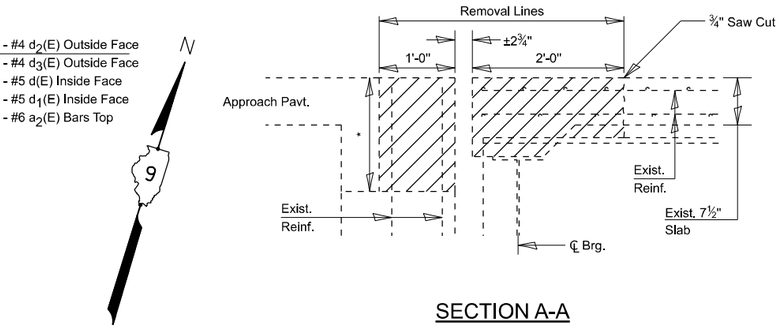

SECTION @ ABUTMENTS
SHOWING NEW CONCRETE

See sheets 6,7, and 19 of 21 for Rebar details within joint reconstruction for new interior parapet and concrete medians.

MIN BAR LAP
#5 - 3'-2"
#6 - 3'-10"

SECTION A-A

* 1.1' to 1.7' b/w Front of S. Parapet & Bridge Chord
1.2' to 2.1' b/w Bridge Chord & Front of N. Parapet

Dimensions are based on a rolled rail strip joint. If the Contractor elects to use welded rail strip seal joint deck dimensions may require adjustments to satisfy the details on sheet 14 of 21.

Concrete Removal

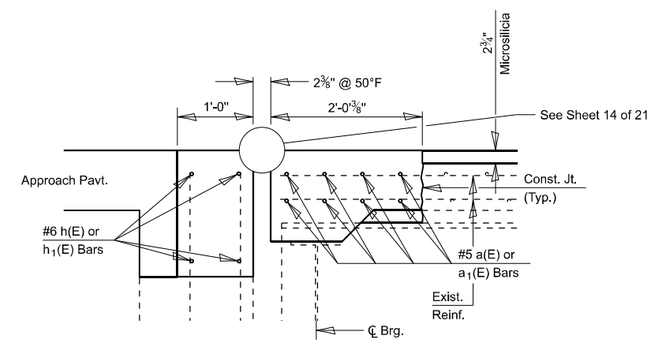

SECTION B-B

BILL OF MATERIAL (TWO ABUTMENTS)

Bar	No.	Size	Length	Shape
a(E)	16	#5	28-6"	
a_1(E)	32	#5	26'-1"	
a_2(E)	20	#6	4'-0"	
d(E)	20	#5	3'-0"	
d_1(E)	20	#5	2'-7"	
d_2(E)	20	#4	3'-0"	
d_3(E)	20	#4	3'-7"	
h(E)	8	#6	28'-6"	
h_1(E)	16	#6	26'-5"	
Concrete Removal			Cu. Yd.	21.5
Concrete Superstructure			Cu. Yd.	25.9
Bar Splicers			Each	24
Reinforcement Bars, Epoxy Coated			Pounds	2,650

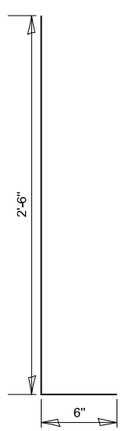

BARS d(E) & d_2(E)

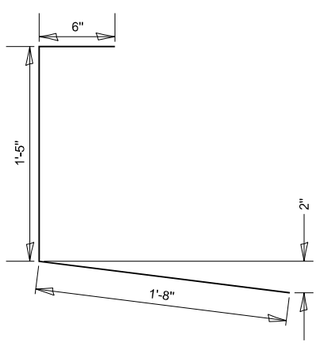

BAR d_3(E)

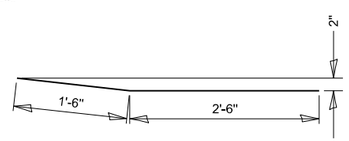

BAR a_2(E)

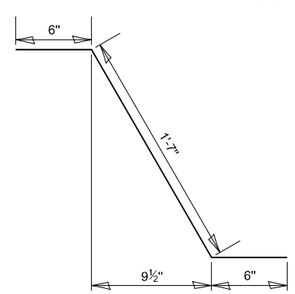

BAR d_1(E)

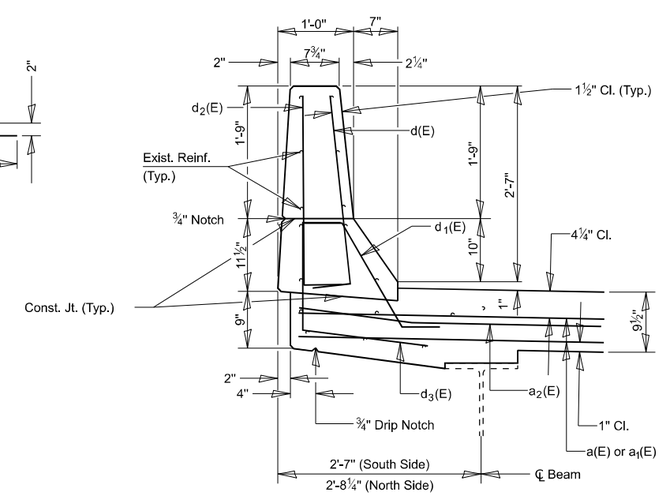

SECTION THROUGH PARAPETS
AND END POSTS @ ABUTMENTS

JOINT RECONSTRUCTION DETAILS
IL. RTE. 149 OVER F.A.I. RTE. 57
F.A.I. ROUTE 57 SECTION 28-5(K-1)
FRANKLIN COUNTY
STATION 157+85.75 (F.A.I. RTE. 57)
STATION 694+22.53 (IL. RTE. 149)
STRUCTURE NO. 028-0039

MODEL: Abutment Design-1 [Sheet]
FILE NAME: pw://ildot-pw.bentley.com:PWIDOT/Documents/IDOT Offices/District 9/ORD Projects/78814/CADData/CADsheets/D978814-Sht04structures.dgn

USER NAME = Zachary.Lomax	DESIGNED -	REVISED -	
	DRAWN -	REVISED -	
PLOT SCALE = 0.16666633 ' / in.	CHECKED -	REVISED -	
PLOT DATE = 5/16/2023	DATE -	REVISED -	

STATE OF ILLINOIS
DEPARTMENT OF TRANSPORTATION

JOINT RECONSTRUCTION DETAILS
STRUCTURE NO. 028-0039

SCALE: | SHEET 13 OF 21 SHEETS | STA. | TO STA.

F.A.P. RTE.	SECTION	COUNTY	TOTAL SHEETS	SHEET NO.
873	(28-5)K-1	FRANKLIN	162	129
		CONTRACT NO. 78814		
		ILLINOIS	FED. AID PROJECT	

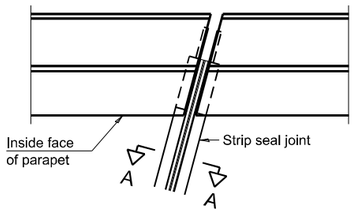

FOR SKEWS ≤ 30°

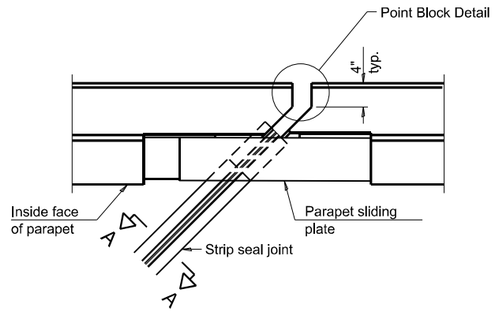

FOR SKEWS > 30°

PLAN AT PARAPET

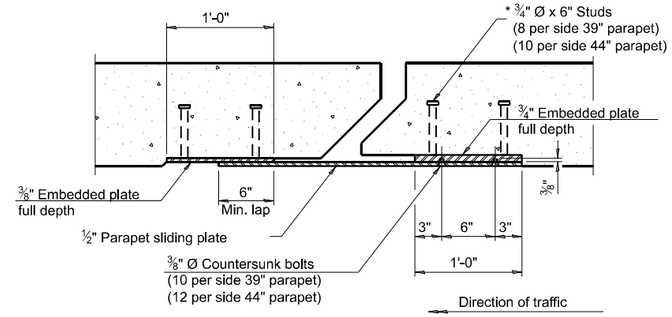

SECTION B-B

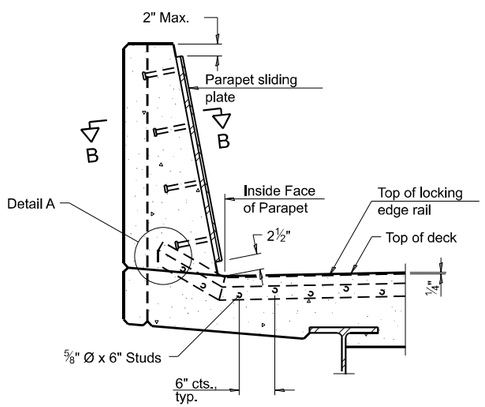

SECTION AT PARAPET

(Skews > 30° shown. Skews ≤ 30° similar except as shown in plan view.)

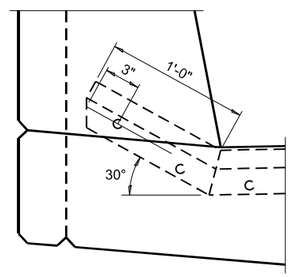

DETAIL A

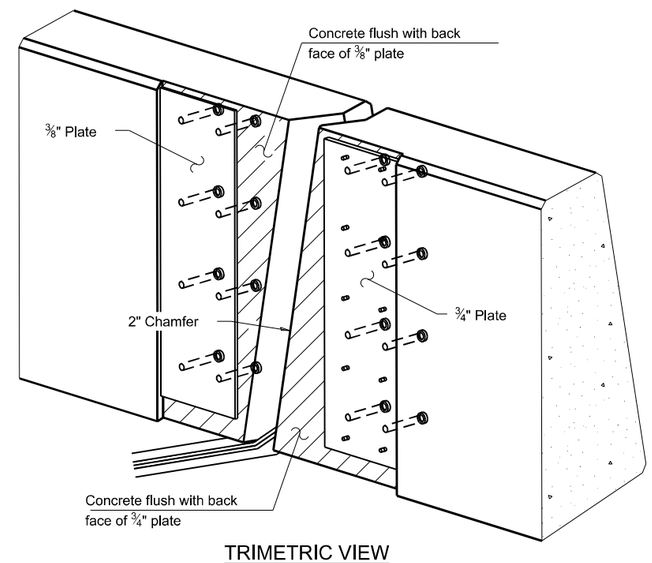

TRIMETRIC VIEW

(Showing embedded plates only)

Notes:

The strip seal shall be made continuous and shall have a minimum thickness of ¼". The configuration of the strip seal shall match the configuration of the locking edge rails. Open or "webbed" strip seal gland configurations are not permitted. The gland shall be sized for a maximum rated movement of 4 inches.

The locking edge rails depicted are configured for typical applications and are conceptual only. The actual configuration of the locking edge rails and matching strip seal may vary from manufacturer to manufacturer provided they fit the application and meet the minimum anchorage shown. Flanged edge rails, however, will not be allowed. Locking edge rails may exceed the 4½" maximum depth provided the anchorage system is revised according to the manufacturer's recommendation.

The manufacturer's recommended installation methods shall be followed.

All steel components shall be galvanized after fabrication according to Article 520.03 of the Standard Specifications.

The Maximum space between locking edge rail segments shall be 3/16" and sealed with a suitable sealant; however, any rail joint within 10' measured perpendicular to the face of the curb or parapet shall be welded as shown in the locking edge rail splice detail.

Cost of parapet sliding plates, embedded plates, and anchorage studs included with Preformed Joint Strip Seal.

39" constant slope barrier shown, 44" constant slope barrier similar as noted.

The concrete opening below the strip seal will vary based on the locking edge rail chosen by the Contractor. Deck and parapet lengths shown elsewhere in the plans are dimensioned to the concrete opening, not the joint opening, and are based on the rolled locking edge rail. If the Contractor elects to use a different locking edge rail, dimensional adjustments may be required. One exception to this would be the strip seal joint at the end of the precast bridge approach slab. For these cases the pavement connector length shall be adjusted, not the length of the bridge approach slab.

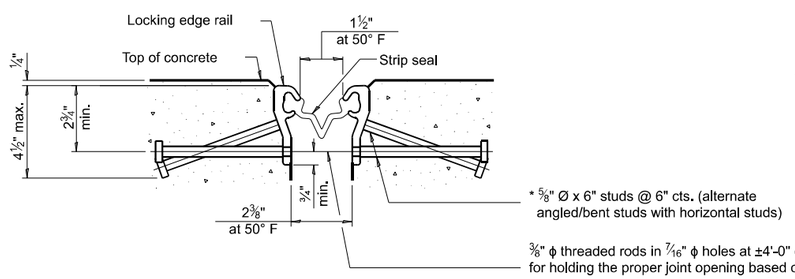

SHOWING ROLLED RAIL JOINT

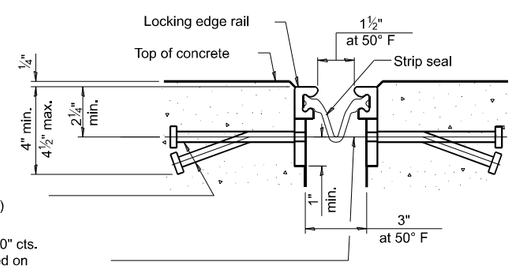

SHOWING WELDED RAIL JOINT

SECTION A-A

* Granular or solid flux filled headed studs conforming to Article 1006.32 of the Std. Specs., automatically end welded.

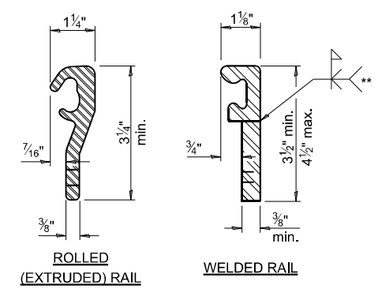

ROLLED (EXTRUDED) RAIL

WELDED RAIL

LOCKING EDGE RAILS

** Back gouge not required if complete joint penetration is verified by mock-up.

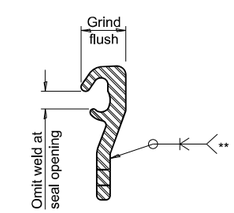

LOCKING EDGE RAIL SPLICE

The inside of the locking edge rail groove shall be free of weld residue. Rolled rail shown, welded rail similar.

BILL OF MATERIAL

Item	Unit	Total
Preformed Joint Strip Seal	Foot	157

EJ-SS

1-1-2020

PREFORMED JOINT STRIP SEAL
STRUCTURE NO. 028-0039

MODEL: Preformed Joint Seal Detail [Sheet]
FILE NAME: pw://ildot-pw.bentley.com:PWIDOT/Documents/IDOT Offices/District 9/ORD Projects-78814/CADData/CADsheets/D978814-SHKO-Structures.dgn

USER NAME = Zachary.Lomax	DESIGNED -	REVISED -	
	DRAWN -	REVISED -	
PLOT SCALE = 0.16666633 ' / in.	CHECKED -	REVISED -	
PLOT DATE = 5/16/2023	DATE -	REVISED -	

STATE OF ILLINOIS
DEPARTMENT OF TRANSPORTATION

PREFORMED JOINT STRIP SEAL DETAILS
STRUCTURE NO. 028-0039

SCALE: | SHEET 14 OF 21 SHEETS | STA. TO STA.

F.A.P. RTE.	SECTION	COUNTY	TOTAL SHEETS	SHEET NO.
873	(28-5)K-1	FRANKLIN	162	130
		CONTRACT NO. 78814		
	ILLINOIS	FED. AID PROJECT		

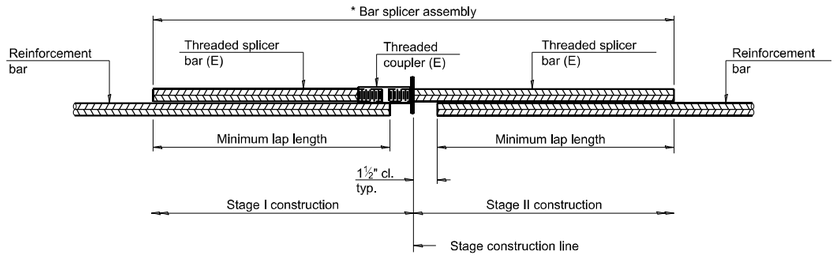

STANDARD BAR SPLICER ASSEMBLY PLAN

(All components shall be provided from one supplier)

Threaded splicer bar length = min. lap length + 1½" + thread length

* Epoxy not required on Bar Splicer Assembly components used in conjunction with black bars.

Location	Bar size	No. assemblies required	Minimum lap length
Deck	#5	16	3'-6"
Hatch Block	#6	8	4'-0"
Top Appr. Slab	#5	60	2'-3"
Bot. Appr. Slab	#8	80	3'-8"
Top Appr. Ftg.	#5	40	2'-3"
Bot. Appr. Ftg.	#5	40	2'-3"

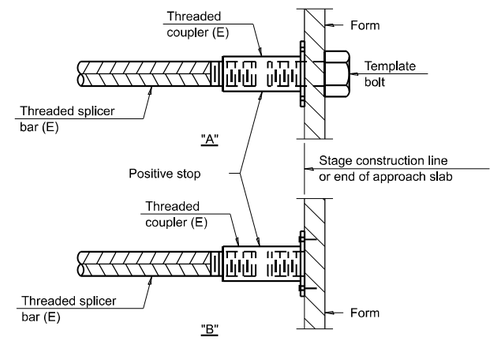

INSTALLATION AND SETTING METHODS

"A" : Set bar splicer assembly by means of a template bolt.
"B" : Set bar splicer assembly by nailing to wood forms or cementing to steel forms.
(E) : Indicates epoxy coating.

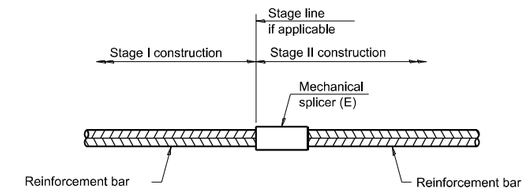

STANDARD MECHANICAL SPLICER

Location	Bar size	No. assemblies required

Notes:
Splicer bars shall be deformed with threaded ends and have a minimum 60 ksi yield strength.
All reinforcement shall be lapped and tied to the splicer bars.
Bar splicer assemblies shall be epoxy coated according to the requirements for reinforcement bars. See Section 508 of the Standard Specifications.
See approved list of bar splicer assemblies and mechanical splicers for alternatives.

BAR SPLICER ASSEMBLY DETAILS
IL. RTE. 149 OVER F.A.I. RTE. 57
F.A.I. ROUTE 57 SECTION 28-5(K-1)
FRANKLIN COUNTY
STATION 157+85.75 (F.A.I. RTE. 57)
STATION 694+22.53 (IL. RTE. 149)
STRUCTURE NO. 028-0039

BSD-1 1-1-2020

MODEL: Bar Slicer Details-1 (Sheet)
FILE NAME: pw://ildot-pw.bentley.com:PWIDOT/Documents/IDOT Offices/District 9/ORD Projects/78814/CADData/CADsheets/D978814-SHTO-Structures.dgn

USER NAME = Zachary.Lomax	DESIGNED -	REVISED -	STATE OF ILLINOIS DEPARTMENT OF TRANSPORTATION
	DRAWN -	REVISED -	
PLOT SCALE = 0.16666633 ' / in.	CHECKED -	REVISED -	
PLOT DATE = 5/16/2023	DATE -	REVISED -	

BAR SLICER ASSEMBLY DETAILS
STRUCTURE NO. 028-0039

SCALE: SHEET 15 OF 21 SHEETS STA. TO STA.

F.A.P. RTE.	SECTION	COUNTY	TOTAL SHEETS	SHEET NO.
873	(28-5)K-1	FRANKLIN	162	131
		CONTRACT NO. 78814		
		ILLINOIS	FED. AID PROJECT	

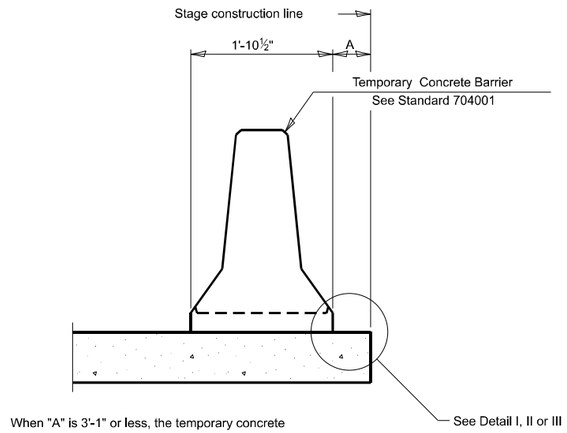

When "A" is 3'-1" or less, the temporary concrete barrier shall be restrained to the new slab according to Detail I, II or III. No restraint is required when "A" is greater than 3'-1".

NEW SLAB OR NEW DECK BEAM

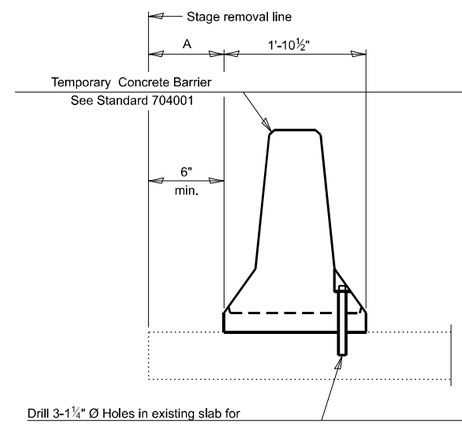

Drill 3-1¼" Ø Holes in existing slab for 1" Ø restraining pins. Traffic side only. Cost of restraining pins are included with Temporary Concrete Barrier. No restraint is required when "A" is greater than 3'-1".

EXISTING SLAB

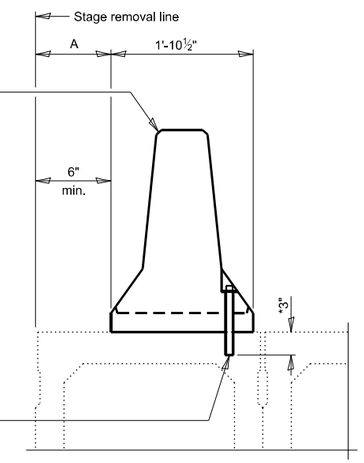

* When hot-mix asphalt wearng surface is present, embedment shall be 3" plus the wearing surface depth.

EXISTING DECK BEAM

SECTIONS THRU SLAB OR DECK BEAM

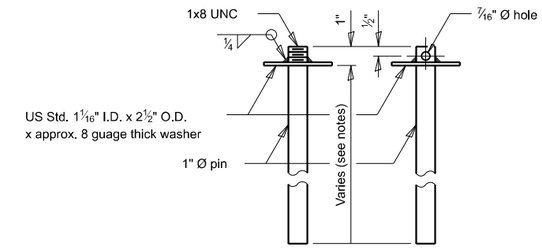

RESTRAINING PIN

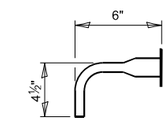

BAR SPLICER FOR #4 BAR - DETAIL III

Notes:

Cost of retainer assembly is included with Temporary Concrete Barrier.

A retainer assembly shall be located at the approximate ℄ of each temporary concrete barrier.

The retainer plate shall not be removed until the concrete on the adjacent stage is ready to be poured. For Detail III applications the retainer plate shall not be removed until just prior to placing the adjacent beam.

When the 'A' dimension is less than 1½", the wood block shall be omitted and the barrier shall be placed in direct contact with the steel retainer plate. For deck beam applications the minimum required 'A' distance is 6" to accommodate the shear key clamping device.

Detail I - Installation for a new bridge deck or bridge slab.

Detail II - Installation for a new deck beam with an initial concrete wearing surface. Additional bar splicers shall be provided at 6'-0" centers and paired with the bar splicers of the concrete wearing surface reinforcement to accommodate the installation of the retainer assemblies. The cost of the additional bar splicers is included with the concrete wearing surface.

Detail III - Installation for a new deck beam with no initial wearing surface or with an initial hot-mix asphalt (HMA) wearing surface present. The deck beam directly beneath the temporary concrete barrier shall be fabricated with bar splicer inserts in the side of the beam, as detailed, to accommodate the installation of the retainer assemblies. A pair of bar splicers, 6" apart, shall be placed at 6'-0" centers along the length of the beam. The cost of the bar splicers is included with the deck beam.

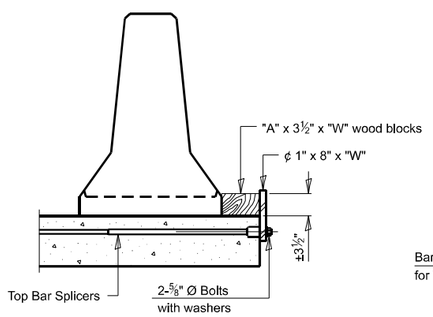

DETAIL I

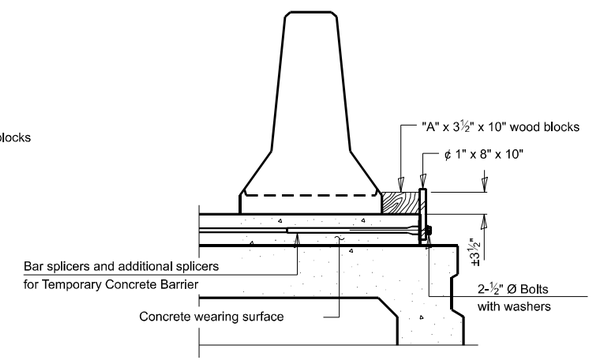

DETAIL II

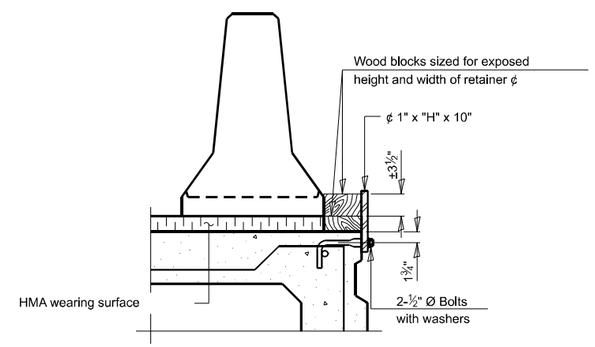

DETAIL III

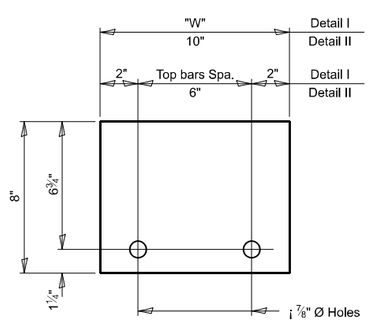

STEEL RETAINER ¢ 1" x 8" x "W"

(Detail I and II)

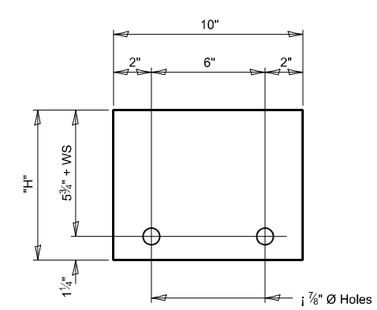

STEEL RETAINER ¢ 1" x "H" x 10"

(Detail III)

TEMPORARY CONCRETE BARRIER FOR STAGE CONSTRUCTION DETAILS
IL. RTE. 149 OVER F.A.I. RTE. 57
F.A.I. ROUTE 57 SECTION 28-5(K-1)
FRANKLIN COUNTY
STATION 157+85.75 (F.A.I. RTE. 57)
STATION 694+22.53 (IL. RTE. 149)
STRUCTURE NO. 028-0039

R-27 8-11-2017

MODEL: Temporary Concrete Barrier for Stage Construction Details [Sheet]
FILE NAME: pw://ildot-pw.bentley.com:PWIDOT/Documents/IDOT Offices/District 9/ORD Projects/78814/CADData/CADsheets/D978814-Sht0-Structures.dgn

USER NAME = Zachary.Lomax	DESIGNED -	REVISED -	
	DRAWN -	REVISED -	
PLOT SCALE = 0.16666633 ' / in.	CHECKED -	REVISED -	
PLOT DATE = 5/16/2023	DATE -	REVISED -	

STATE OF ILLINOIS
DEPARTMENT OF TRANSPORTATION

TEMPORARY CONCRETE BARRIER FOR STAGE CONSTRUCTION DETAILS

SCALE: | SHEET 16 OF 21 SHEETS | STA. | TO STA.

F.A.P. RTE.	SECTION	COUNTY	TOTAL SHEETS	SHEET NO.
873	(28-5)K-1	FRANKLIN	162	132
		CONTRACT NO. 78814		
	ILLINOIS	FED. AID PROJECT		

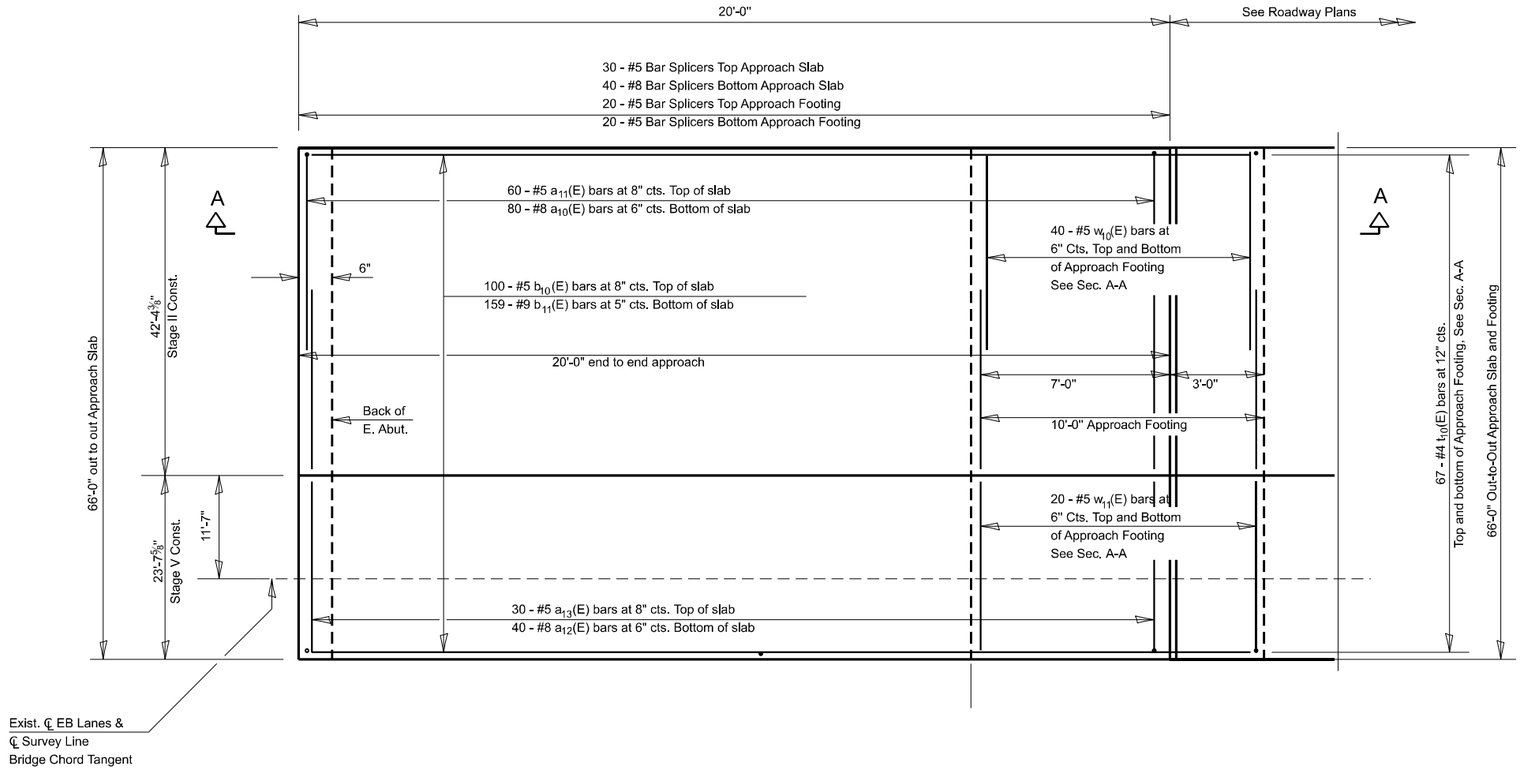

(E. Approach Slab; W. Approach Slab Similar)

PLAN

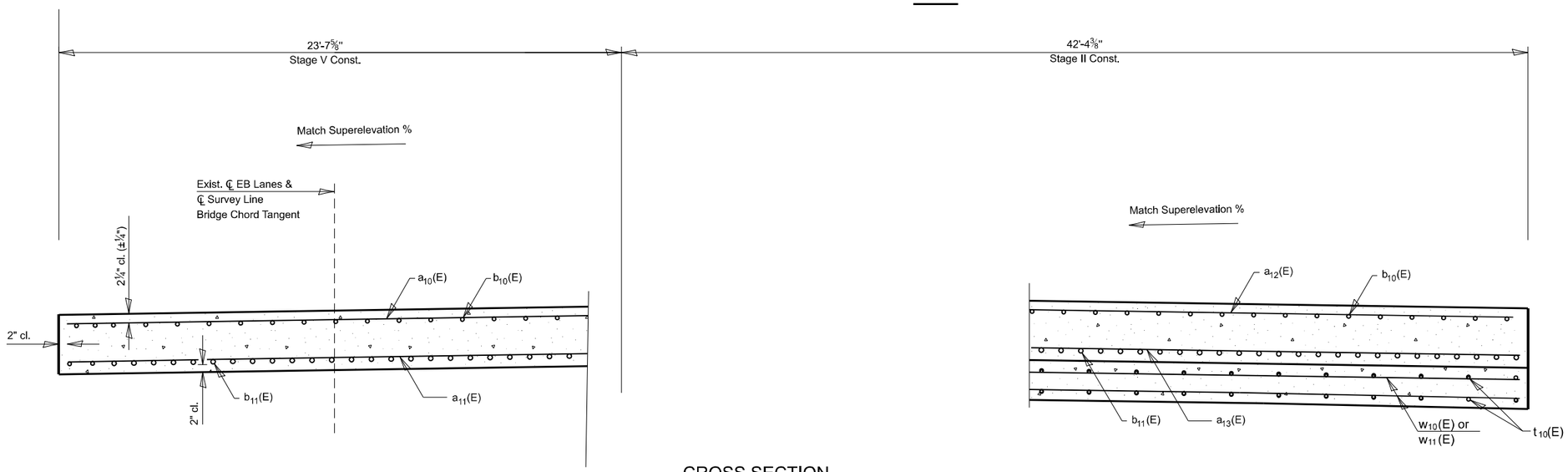

NEAR ABUTMENT

CROSS SECTION

(Looking West)

AT APPROACH FOOTING

TWO BRIDGE APPROACH SLABS BILL OF MATERIAL

(Includes new parapet and new medians within limits of Bridge Approach Slabs)

Bar	No.	Size	Length	Shape
a10(E)	120	#5	22'-7"	
a11(E)	160	#8	23'-7"	
a12(E)	60	#5	23'-4"	
a13(E)	80	#8	23'-4"	
b8(E)	12	#5	20'-8"	
b9(E)	12	#5	4'-1"	
b10(E)	200	#5	19'-8"	
b11(E)	318	#9	19'-8"	
c2(E)	176	#5	1'-4"	
c3(E)	88	#5	2'-4"	
d4(E)	68	#5	6'-5"	
d6(E)	68	#5	8'-2"	
e24(E)	20	#4	20'-8"	
t10(E)	268	#4	9'-8"	
w10(E)	160	#5	22'-7"	
w11(E)	80	#5	23'-4"	
v100(E)	134	#5	3'-0"	
Protective Coat			Sq. Yd.	325
Median Removal			Sq. Ft.	240
Approach Slab Removal			Sq. Yd.	293
Concrete Superstructure (Approach Slab)			Cu. Yd.	130.2
Concrete Structures			Cu. Yd.	40.7
Bar Splicers			Each	220
Reinforcement Bars, Epoxy Coated			Pound	54,560

(Sheet 1 of 3)

USER NAME = Zachary.Lomax	DESIGNED -	REVISED -	
	DRAWN -	REVISED -	
PLOT SCALE = 0.16666633 ' / in.	CHECKED -	REVISED -	
PLOT DATE = 5/16/2023	DATE -	REVISED -	

STATE OF ILLINOIS
DEPARTMENT OF TRANSPORTATION

APPROACH DETAILS 1
STRUCTURE NO. 028-0039

SCALE: | SHEET 17 OF 21 SHEETS | STA. TO STA.

F.A.P. RTE.	SECTION	COUNTY	TOTAL SHEETS	SHEET NO.
873	(28-5)K-1	FRANKLIN	162	133

CONTRACT NO. 78814

ILLINOIS | FED. AID PROJECT

MODEL: Approach Details [Sheet]
FILE NAME: pw://ildot-pw.bentley.com:PWIDOT/Documents/IDOT Offices/District 9/ORD Projects/78814/CADData/CADsheets/D978814-Sht02-Structures.dgn

Notes:

Approach slab shall be paid for as Concrete Superstructure (Approach Slab).
Approach footing concrete shall be paid for as Concrete Structures.
The approach footing maximum applied service bearing pressure (Qmax) = 2.0 ksf.
Cost of excavation for approach footing included with Concrete Structures.

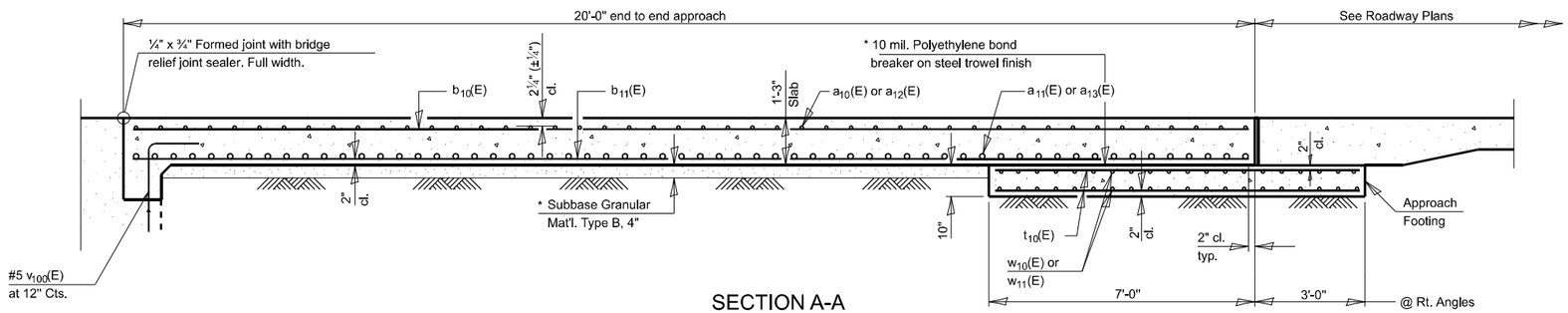

SECTION A-A

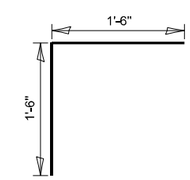

Bar v_{100}(E)

(Sheet 2 of 2)

USER NAME = Zachary.Lomax	DESIGNED -	REVISED -	STATE OF ILLINOIS DEPARTMENT OF TRANSPORTATION	APPROACH DETAILS 2 STRUCTURE NO. 028-0039	F.A.P. RTE.	SECTION	COUNTY	TOTAL SHEETS	SHEET NO.
	DRAWN -	REVISED -			873	(28-5)K-1	FRANKLIN	162	134
PLOT SCALE = 0.16666633 ' / in.	CHECKED -	REVISED -					CONTRACT NO. 78814		
PLOT DATE = 5/16/2023	DATE -	REVISED -		SCALE: SHEET 18 OF 21 SHEETS STA. TO STA.		ILLINOIS	FED. AID PROJECT		

MODEL: Approach Details-1 [Sheet]
FILE NAME: pw://ildot-pw.bentley.com:PWIDOT7/Documents/IDOT Offices/District 9/ORD Projects/78814/CADData/CADsheets/D978814-SHEQ-Structures.dgn

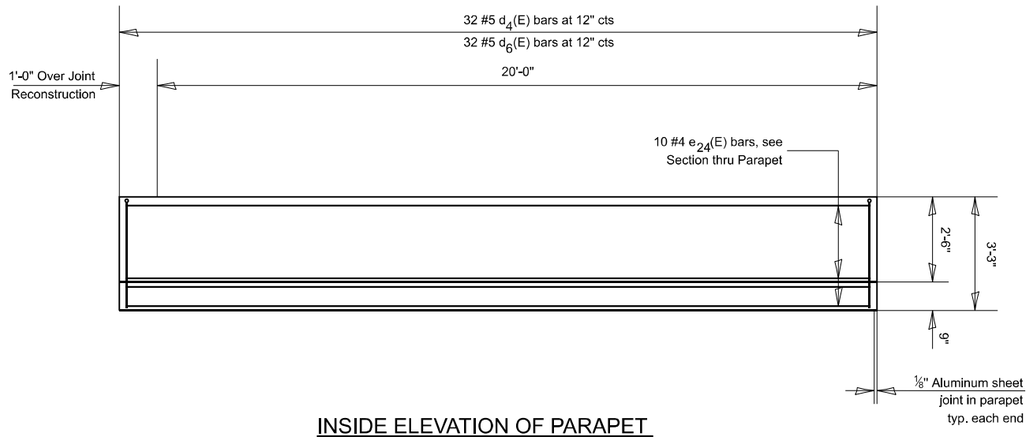

INSIDE ELEVATION OF PARAPET
OVER BRIDGE APPROACH SLABS AND
JOINT RECONSTRUCTION
(TYP. EACH END)

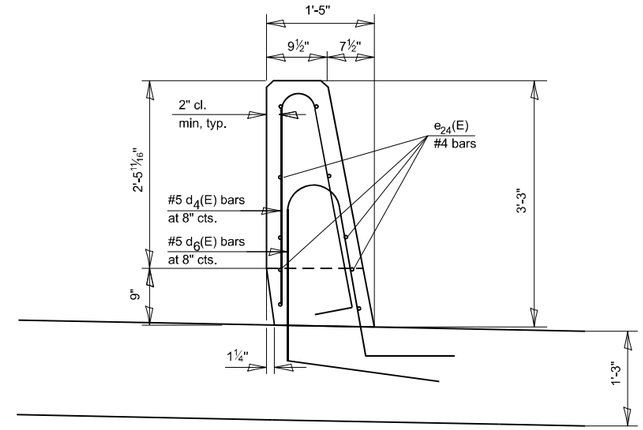

SECTION THROUGH PARAPET
(within limits of BRIDGE APPROACH SLABS
AND JOINT RECONSTRUCTION)

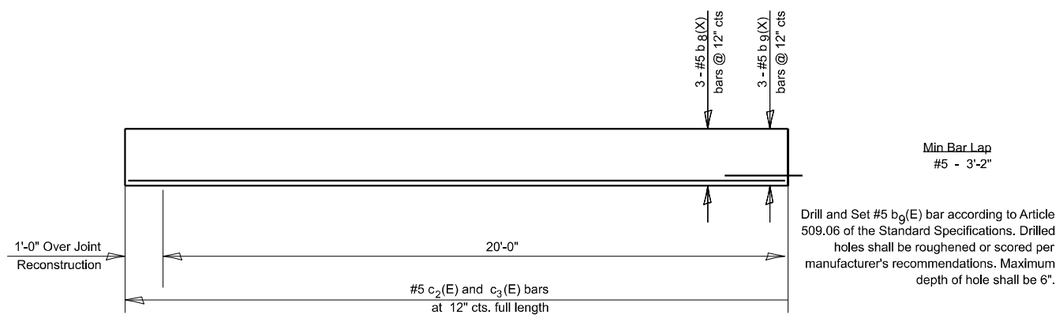

PLAN VIEW OF MEDIANS OVER
BRIDGE APPROACH SLABS
AND JOINT RECONSTRUCTION
(TYP. EACH END)

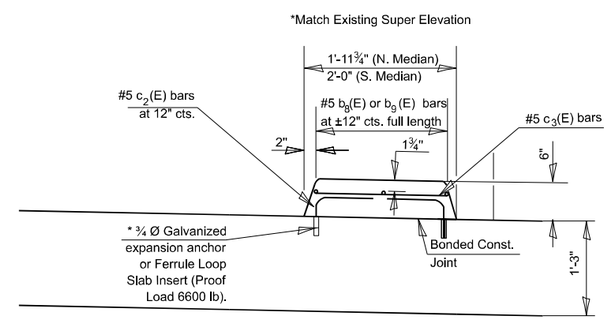

SECTION THROUGH MEDIANS
(within limits of BRIDGE APPROACH SLABS
AND JOINT RECONSTRUCTION)

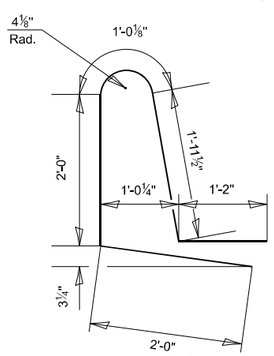

BAR d_6(E)

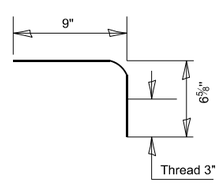

BAR c_2(E)

(Sheet 3 of 3)

MODEL: Approach Parapet Design [Sheet]
FILE NAME: pw://ildot-pw.bentley.com:PWIDOT/Documents/IDOT Offices/District 9/ORD Projects/78814/CADData/CADsheets/D978814-Sht0-Structures.dgn

USER NAME = Zachary.Lomax	DESIGNED -	REVISED -	
	DRAWN -	REVISED -	
PLOT SCALE = 0.16666633 ' / in.	CHECKED -	REVISED -	
PLOT DATE = 5/16/2023	DATE -	REVISED -	

STATE OF ILLINOIS
DEPARTMENT OF TRANSPORTATION

APPROACH DETAILS 3
STRUCTURE NO. 028-0039

SCALE: | SHEET 19 OF 21 SHEETS | STA. | TO STA.

F.A.P. RTE.	SECTION	COUNTY	TOTAL SHEETS	SHEET NO.
873	(28-5)K-1	FRANKLIN	162	135
		CONTRACT NO. 78814		
	ILLINOIS	FED. AID PROJECT		

Bench Mark: Steel bolt set in N.W. handrail of C. & E.I. R.R. and 7th Street Bridge - Southbound lanes. Sta. 119+71.94, Elev. 420.30

Existing Structure: S.N. 028-0039 built as F.A.I. Rte.57, Sec. 28-5H(BF)-1 in 1963. The Superstructure consists of R.C. deck supported on 4 span continuous W.F. beams. The Contractor shall remove and replace the existing R.C. deck, and reuse substructure units and steel, utilizing stage construction. No salvage.

STATE OF ILLINOIS
DEPARTMENT OF TRANSPORTATION

FOR INFORMATION ONLY

ROUTE NO.	SECTION	COUNTY	TOTAL SHEETS	SHEET NO.
F.A.I. 57	(28-5HB) -1D	FRANKLIN		
FED. ROAD DIST. NO. 7	ILLINOIS	FED. AID PROJECT-		

SHEET NO. 1
23 SHEETS

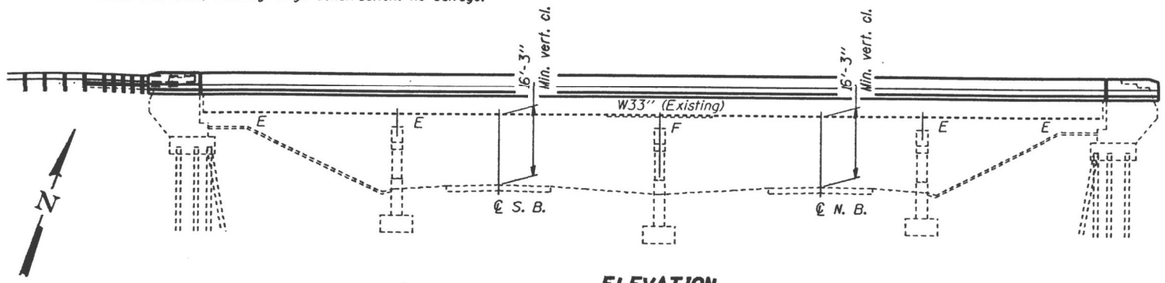

ELEVATION

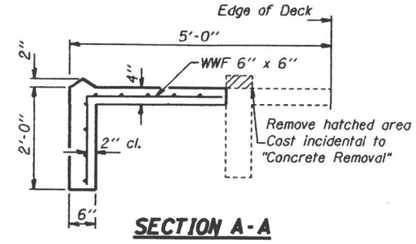

SECTION A-A

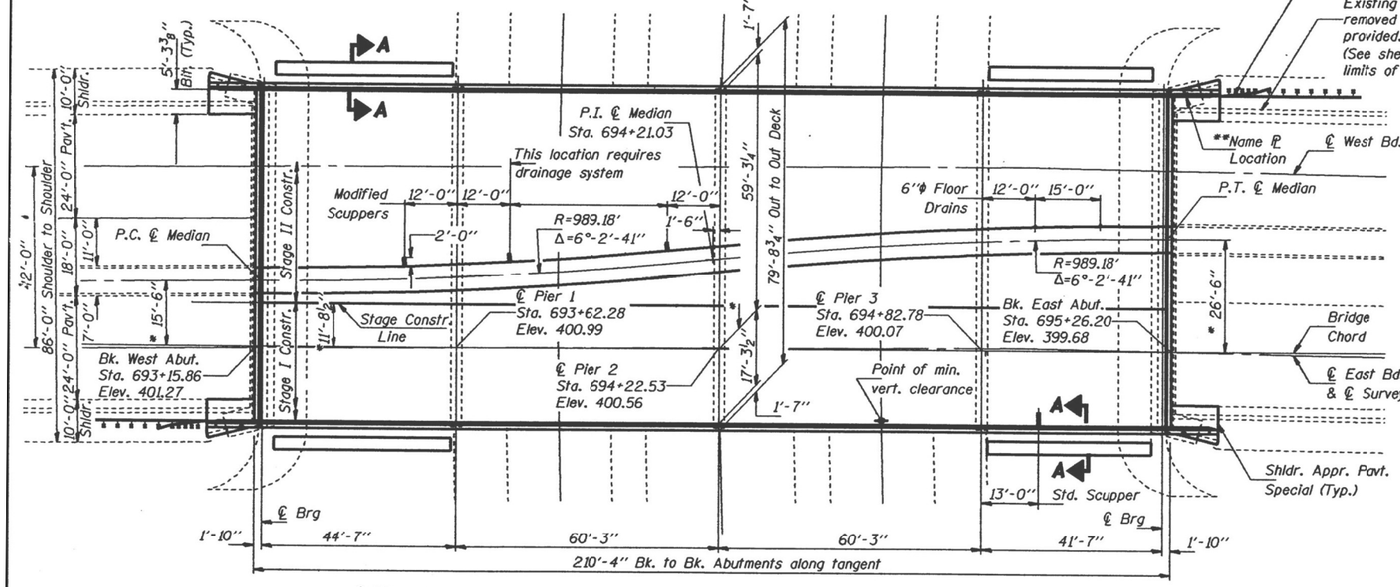

PLAN

* Measured from bridge chord.

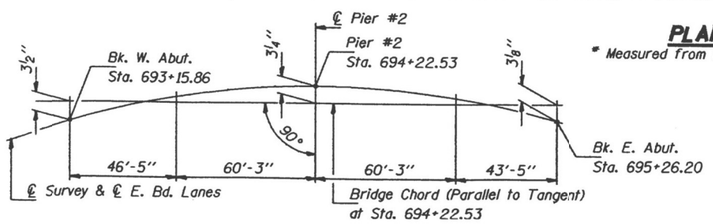

OFFSET SKETCH

CURVE DATA

(Ill. Route 149)
Δ = 3°-13.07'
D = 0°-34'
L = 567.86'
T = 284.00
R = 10,111.06

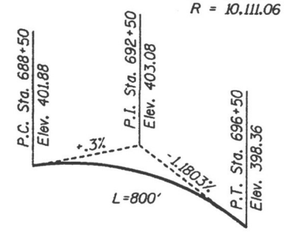

PROFILE GRADE

ILL. Rte. 149 Along ℄ E.B. Lanes

DESIGN SPECIFICATIONS

1992 AASHTO &
1983 Seismic Retrofitting Guidelines for Highway Bridges. (FHWA/RD-83 / 007)

LOADING HS 20-44

Allow 25#/ sq. ft. for future wearing surface.

DESIGN STRESSES

FIELD UNITS
f'c = 3,500 psi
fy = 60,000 psi (Reinf.)
fy = 36,000 psi (Str. Steel - M270 Gr.36)
fs = 18,000 psi (Existing Structural Steel)

SEISMIC DATA

Seismic Performance Catetgory = B
Acceleration Coefficient = 0.095
Site Coefficient = 0.1

STATION 157+85.75
REBUILT 199 BY
STATE OF ILLINOIS
F.A.I. RT. 57 SEC. (28-5HB-1)D
F.A. PROJ.
LOADING HS20
STR. NO. 028-0039

NAME PLATE

** Existing Name Plate to be cleaned and relocated next to the new Name Plate on the New Parapet. Cost incidental to "Name Plates."

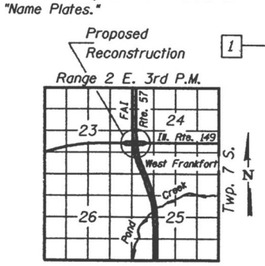

LOCATION SKETCH

GENERAL NOTES

Fasteners shall be high strength bolts. Bolts 3/4" ϕ. open holes 15/16"ϕ. unless otherwise noted.

Field welding of construction accessories will not be permitted to the bottom flange of beams nor to the top flange for a distance equal to one-fourth the span length each way from the pier supports. Field welding in other areas will be permitted only when approved by the Engineer.

Reinforcement bars shall conform to the requirements of AASHTO M-31, M-42 or M-53 Grade 60.

Plan dimensions and details relative to existing structure have been taken from existing plans, and a field survey, and are subject to nominal construction variations. It shall be the Contractor's responsibility to verify such dimensions and details in the field and make necessary approved adjustments prior to construction or ordering of materials. Such variations shall not be cause for additional compensation for a change in the scope of the work, however, the Contractor will be paid for the quantity actually furnished at the unit price bid for the work.

Two 1/8" adjusting shims, of the dimensions of the top bearing plate at Piers #1 & #3 and of the bottom bearing plate at Pier #2, and the E. & W. Abut. shall be provided for each new bearing in addition to all other plates or shims.

Cleaning and painting of the existing structural steel shall be as specified in the Special Provision for "Cleaning and Painting Existing Steel Structures". All existing structural steel within 5 feet of either side of expansion joints shall be cleaned by Method 1. All remaining existing structural steel shall be cleaned by Method 2. The Lead and Chromate Free Alkyd Paint System shall be used for painting of existing structural steel. The prime and intermediate coats shall be applied as specified in the special provision followed by one complete final finish coat over all steel surfaces.

The estimated area to be cleaned by Method 1 is 1080 sq. ft.

The Inorganic Zinc-Silicate/Acrylic/Acrylic Paint System shall be used for shop and field painting of new structural steel except where otherwise noted.

The color of the final finish coat for the facia Beams shall be Interstate Green, Munsell No. 7.5 G 4/8. The color of the finish coat for the interior Beams shall be Light Grey. Munsell No. 10 Y 7/1.

(General Notes continued on next sheet)

TOTAL BILL OF MATERIAL

	ITEM	UNIT	SUPER	SUB	TOTAL
	Concrete Removal	Cu. Yd.		22	22
***	Removal of Existing Concrete Deck	Each	1		1
	Floor Drains	Each	2		2
	Concrete Superstructure	Cu. Yd.	490.8		490.8
▲	Protective Coat	Sq. Yd.	2045		2045
	Elastomeric Brg. Assembly Type I	Each	26		26
	Elastomeric Brg. Assembly Type II	Each	26		26
	Structural Steel	Lbs.	22,550		22,550
	Reinforcement Bars, Epoxy Coated	Lbs.	112,810	4260	117,070
	Name Plates	Each	1		1
	Bridge Deck Grooving	Sq. Yd.	1555		1555
	Jack & Remove Exist. Bearings	Each	65		65
	Structure Excavation	Cu. Yd.		19	19
	Preformed Joint Seal 4"	Ft.	161		161
	Drainage Scuppers	Each	1		1
	Drainage Scuppers Special	Each	3		3
	Cleaning and Painting Steel Bridge	L. Sum	1		1
	Power Tool Cleaning Residue Containment and Disposal	L. Sum	1		1
	Blasting Residue Containment and Disposal	L. Sum	1		1
	Slope Wall 4"	Sq. Yd.	99		99
	Stud Shear Connectors	Each	6747		6747

*** Includes Removal of existing railing and expansion plates.
▲ Includes deck & top and inside face of Parapet.

GENERAL PLAN
ILL. RTE. 149 OVER F.A.I. RTE. 57
F.A.I. ROUTE 57 SECTION (28-5HB-1)D
FRANKLIN COUNTY
STATION 157+85.75 (F.A.I. RTE. 57)
STATION 694+22.53 (ILL. RTE. 149)
STRUCTURE NUMBER 028-0039

DESIGNED Michael D. Cline
CHECKED Shaker Ashour
DRAWN John F. Schneller Jr.
CHECKED

June 13, 1994
EXAMINED Craig D. Kaspar — ENGINEER OF BRIDGE DESIGN
PASSED Ralph E. Anderson — ENGINEER OF BRIDGES AND STRUCTURES

STATE OF ILLINOIS — RALPH E. ANDERSON — 081-004625 — LICENSED STRUCTURAL ENGINEER

USER NAME = Zachary.Lomax	DESIGNED -	REVISED -	
	DRAWN -	REVISED -	
PLOT SCALE = 0.16666633 ' / in.	CHECKED -	REVISED -	
PLOT DATE = 5/17/2023	DATE -	REVISED -	

STATE OF ILLINOIS
DEPARTMENT OF TRANSPORTATION

FOR INFORMATION ONLY
SN 028-0039

SCALE: ____ SHEET 20 OF 21 SHEETS STA. ____ TO STA. ____

F.A.P. RTE.	SECTION	COUNTY	TOTAL SHEETS	SHEET NO.
873	(28-5)K-1	FRANKLIN	162	136
		CONTRACT NO. 78814		
		ILLINOIS FED. AID PROJECT		

MODEL: Information 1 [Sheet]
FILE NAME: pw://ildot-pw.bentley.com:PWIDOT/Documents/IDOT Offices/District 9/ORD Projects/78814/CADData/CADSheets/D978814-SNIO-Structures.dgn

FOR INFORMATION ONLY

STATE OF ILLINOIS
DEPARTMENT OF TRANSPORTATION

ROUTE NO.	SECTION	COUNTY	TOTAL SHEETS	SHEET NO.
F.A.I. 57	(28-5HB-1)D	FRANKLIN		
FED. ROAD DIST. NO. 7	ILLINOIS	FED. AID PROJECT-		

SHEET NO. 9
23 SHEETS

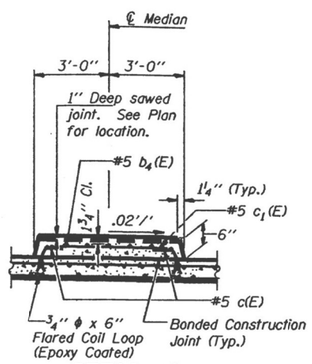

DETAIL "C"

For Median location see Sheet #1 of 23.

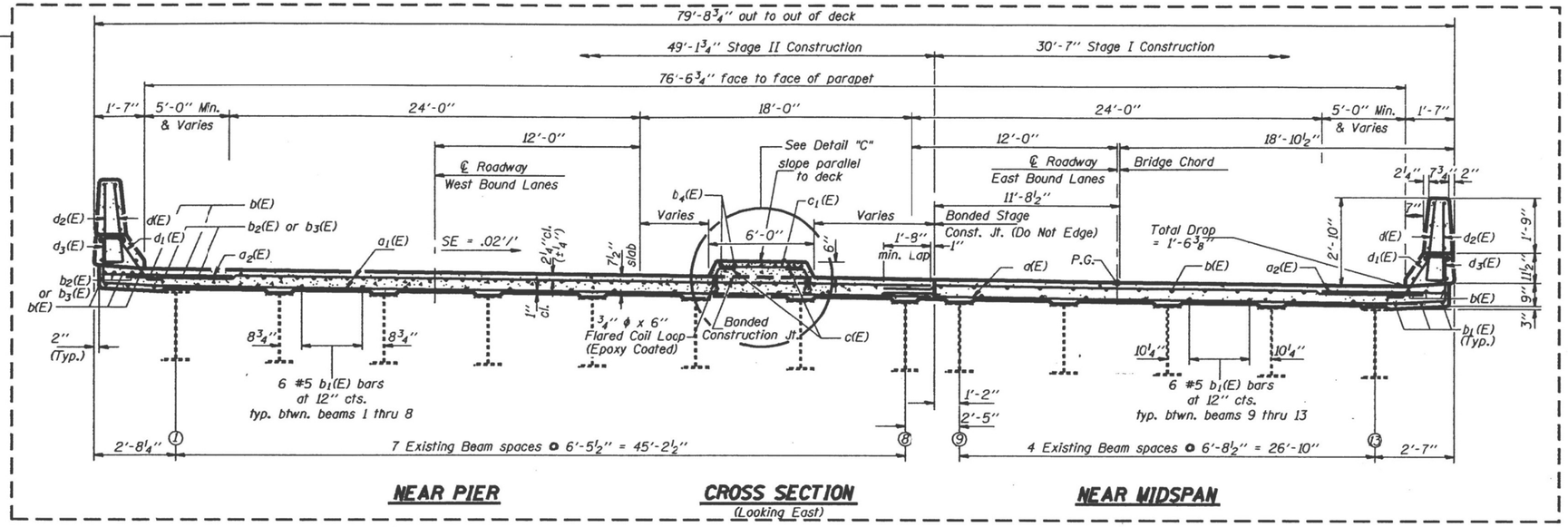

NEAR PIER **CROSS SECTION** (Looking East) **NEAR MIDSPAN**

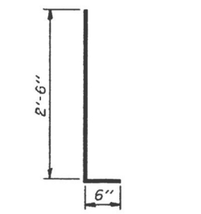

BARS d(E) & d_2(E)

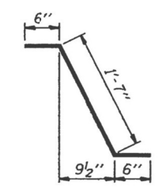

BAR d_1(E)

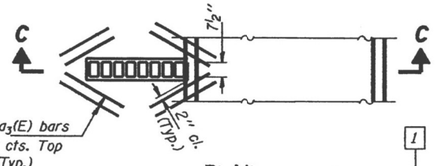

PLAN

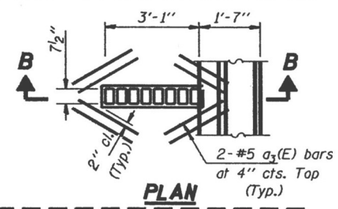

PLAN

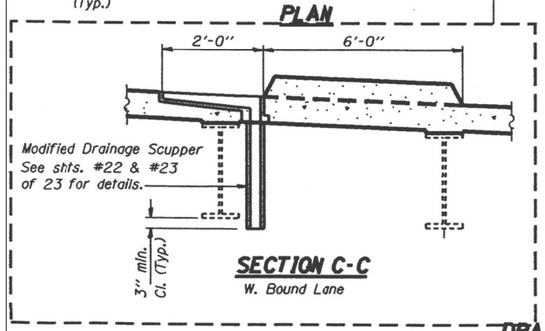

SECTION C-C

W. Bound Lane

DRAINAGE SCUPPER

Note: For locations of Drainage Scupper, See sheet #1 of 22.

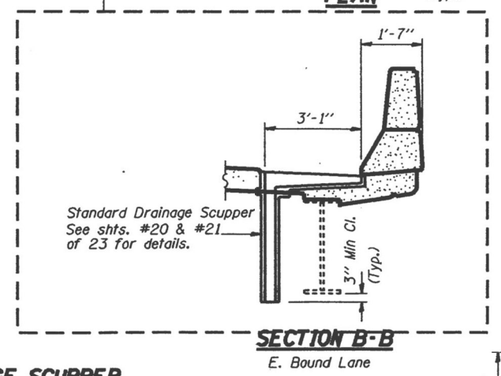

SECTION B-B

E. Bound Lane

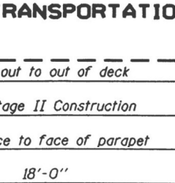

END TREATMENT

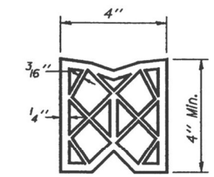

PREFORMED JOINT SEAL (4")

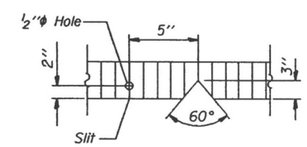

SEAL CUT-OUT

Hatched area to be poured after Superstructure forms have been removed. Quantity of Concrete to be included with Concrete Superstructure.

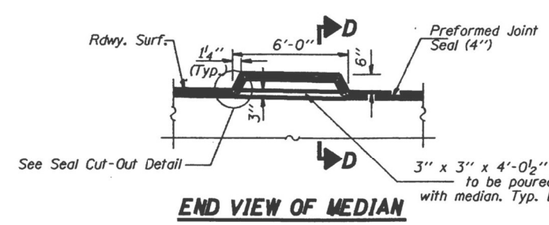

END VIEW OF MEDIAN

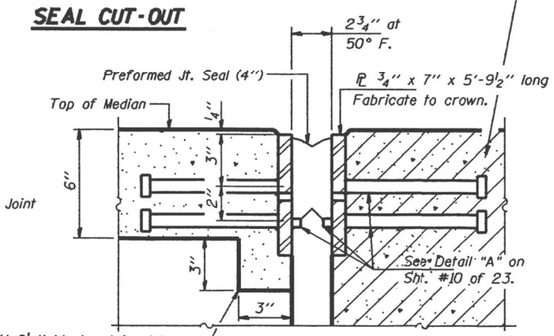

SECTION D-D

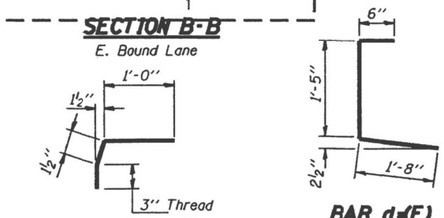

BAR d_3(E)

Bar c(E)

Note: Reinforcement bars designated (E) shall be epoxy coated.
Cut bars to clear Drainage Scuppers.
The Cost of Epoxy Coated Flared Coil Loops is incidental to "Reinforcement Bars, Epoxy Coated."

SUPERSTRUCTURE DETAILS
F.A.I. RT. 57 SEC. (28-5HB-1)D
FRANKLIN COUNTY
STA. 157+85.75

DESIGNED	Michael D. Cima M.A.S.
CHECKED	Shaker Asfour
DRAWN	Shane Summer
CHECKED	S.A. J.F.S.

June 13, 1994
EXAMINED — ENGINEER OF BRIDGE DESIGN
PASSED — ENGINEER OF BRIDGES AND STRUCTURES

S-1-0 12-31-87

MODEL: Information 2 [Sheet]
FILE NAME: pw://ildot-pw.bentley.com:PWIDOT/Documents/IDOT Offices/District 9/ORD Projects/78814/CADData/CADsheets/D978814-Sht0-Structures.dgn

USER NAME = Zachary.Lomax	DESIGNED - ____	REVISED - ____	
	DRAWN - ____	REVISED - ____	
PLOT SCALE = 0.16666633 ' / in.	CHECKED - ____	REVISED - ____	
PLOT DATE = 5/17/2023	DATE - ____	REVISED - ____	

STATE OF ILLINOIS
DEPARTMENT OF TRANSPORTATION

FOR INFORMATION ONLY
SN 028-0039

SCALE: ____ SHEET 21 OF 21 SHEETS STA. ____ TO STA. ____

F.A.P. RTE.	SECTION	COUNTY	TOTAL SHEETS	SHEET NO.
873	(28-5)K-1	FRANKLIN	162	137
		CONTRACT NO. 78814		
		ILLINOIS	FED. AID PROJECT	

Figure 3B-16. Recommended Yield Line Layouts

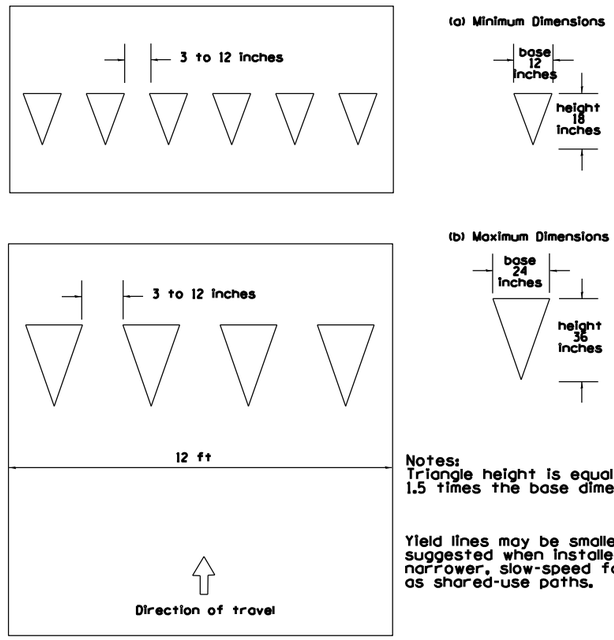

Notes:
Triangle height is equal to 1.5 times the base dimension.

Yield lines may be smaller than suggested when installed on much narrower, slow-speed facilities such as shared-use paths.

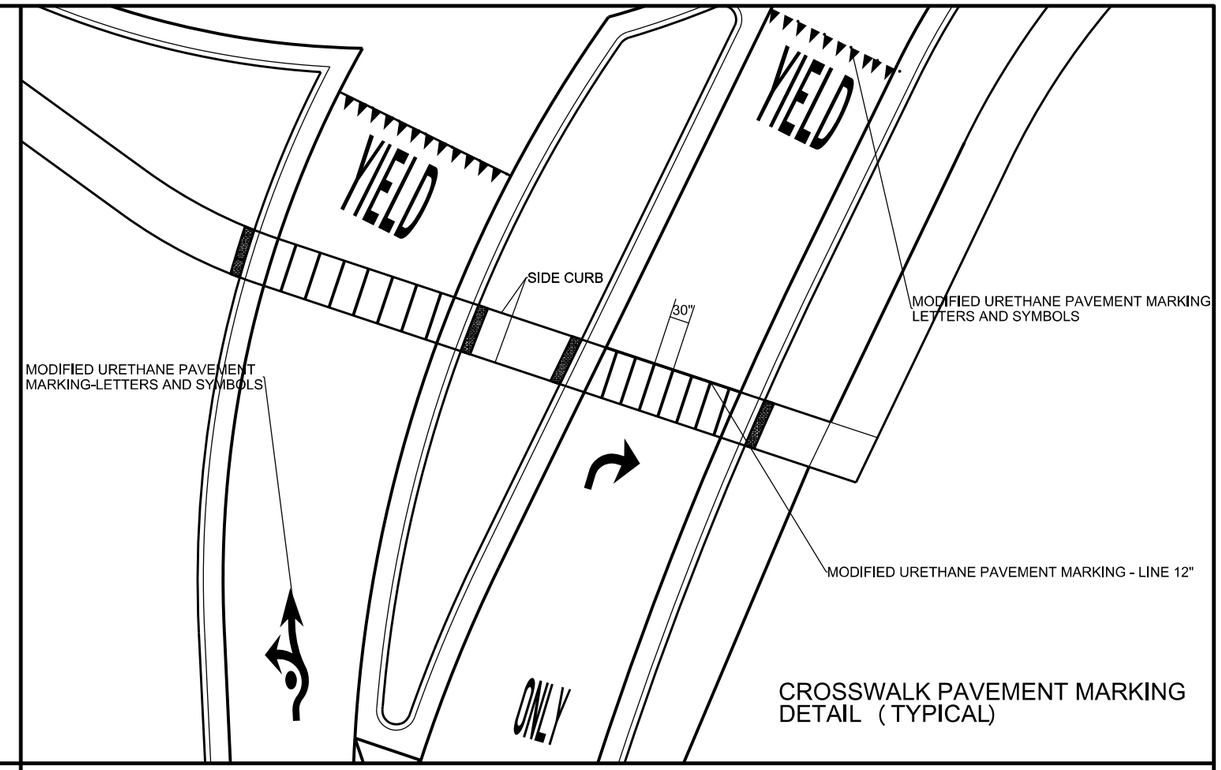

CROSSWALK PAVEMENT MARKING DETAIL (TYPICAL)

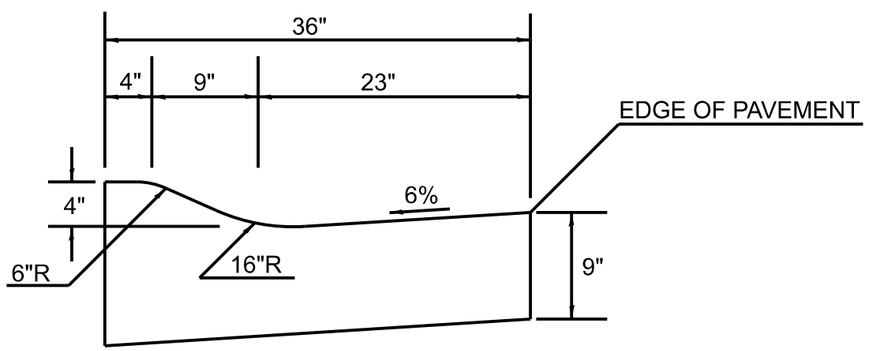

COMBINATION CONCRETE CURB AND GUTTER, TYPE M (SPECIAL)

CONCRETE COLLAR
PIPE TO PIPE

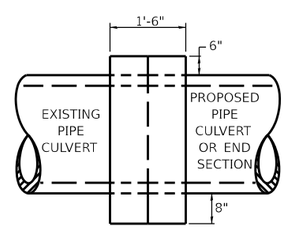

SIDE VIEW

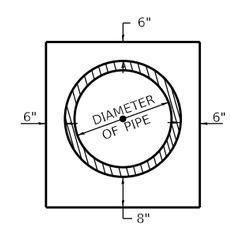

END VIEW

TABULATION

DIAMETER OF PIPE	CL SI CONC CU YDS EST
12"	0.24
15"	0.29
18"	0.32
24"	0.44
30"	0.56
36"	0.66
42"	0.80
48"	0.93
54"	1.07
60"	1.22
72"	1.55

THE CONCRETE COLLAR SHALL BE PAID FOR AT THE CONTRACT UNIT PRICE PER CUBIC YARD FOR CONCRETE COLLAR, AS SHOWN ON THE PLANS, WHICH PRICE SHALL INCLUDE THE REMOVAL OF SUCH PORTIONS THE EXISTING HEADWALLS AS MAY BE REQUIRED.

CLASS SI CONCRETE SHALL BE USED THROUGHOUT.

REVISIONS

DRAWN	7-13-90
REVISED	8-22-94
REVISED	3-26-08
REVISED	5-17-13
REVISED	10-21-21

STD. 9-79

MODEL: $MODELNAME$
FILE NAME: $FILEL$

USER NAME = $USER$	DESIGNED -	REVISED -
	DRAWN -	REVISED -
PLOT SCALE = $SCALE$	CHECKED -	REVISED -
PLOT DATE = $DATE$	DATE -	REVISED -

STATE OF ILLINOIS
DEPARTMENT OF TRANSPORTATION

DETAIL SHEET

SCALE: SHEET OF SHEETS STA. TO STA.

F.A.P. RTE.	SECTION	COUNTY	TOTAL SHEETS	SHEET NO.
873	(28-5) K-1	FRANKLIN	162	138

CONTRACT NO. 78814

ILLINOIS FED. AID PROJECT

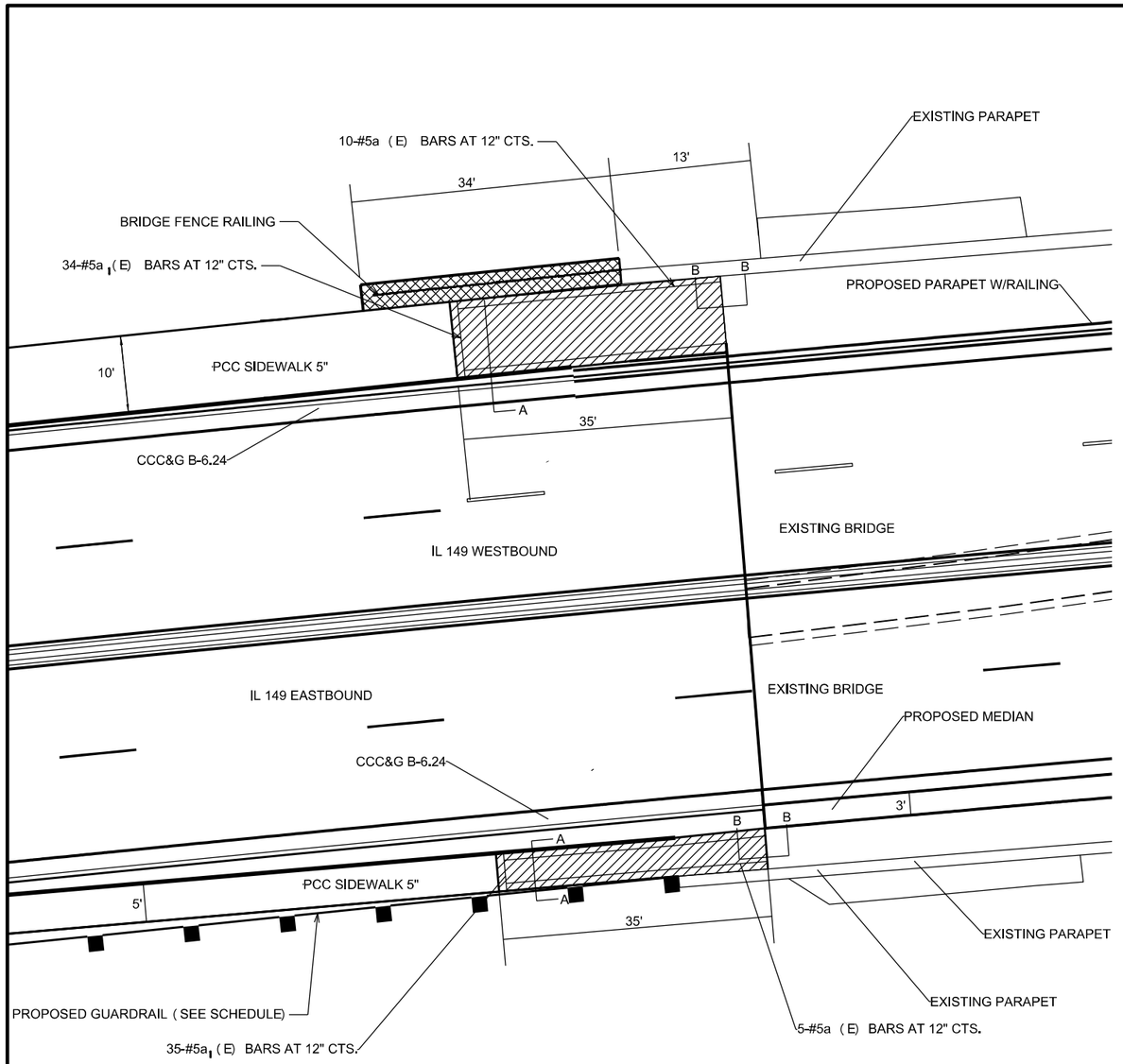

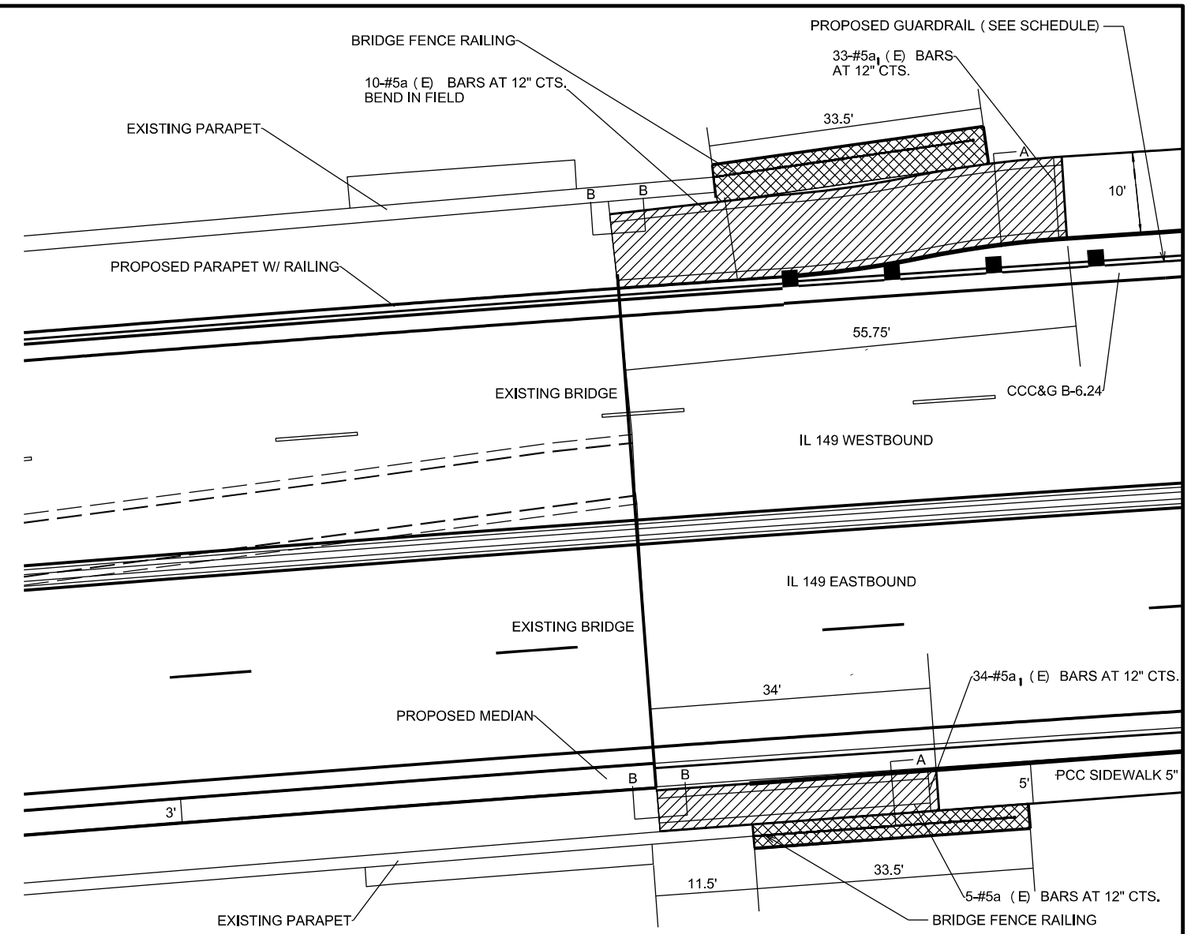

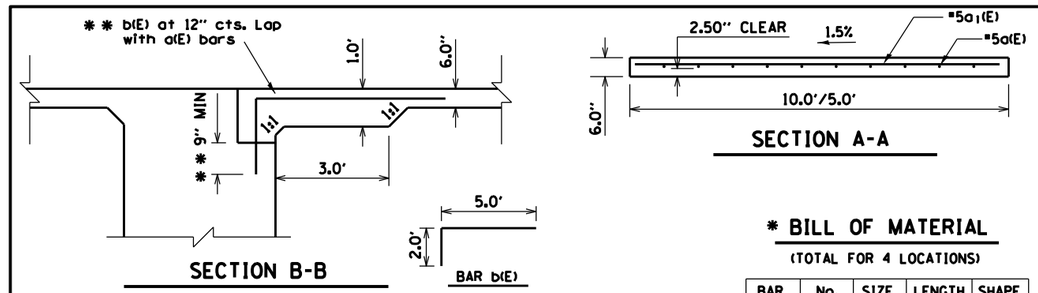

** DRILL AND EPOXY GROUT 9" MIN. INTO NEW CONCRETE ACCORDING TO ARTICLE 584 OFTHE STANDARD SPECIFICATIONS. COST INCLUDED IN PCC SIDEWALK 6", SPECIAL.

* BILL OF MATERIAL

(TOTAL FOR 4 LOCATIONS)

BAR	No.	SIZE	LENGTH	SHAPE
a(E)	10	#5	54'-0"	——
a(E)	20	#5	34'-0"	——
a_1(E)	77	#5	9'-0"	——
a_1(E)	69	#5	4'-0"	——
b(E)	30	#5	7'-0"	¬

ALL REINFORCEMENT BARS SHALL BE EPOXY COATED.

* ALL REINFORCEMENT BARS AND EXPANSION JOINTS WILL BE INCLUDED IN THE COST OF PCC SIDEWALK 6", SPECIAL.

DESIGN STRESSES

fy = 60,000 PSI

f'c = 3,500 PSI

PCC SIDEWALK 6", SPECIAL

PCC SHOULDER 6"

6" PCC SHOULDER SHALL EXTEND TO 18" BEHIND CENTER OF BRIDGE FENCE RAILING AS SHOWN. COST OF 6" PCC SHOULDER SHALL BE INCLUDED IN THE COST OF BRIDGE FENCE RAILING, SEE STRUCTURE PLANS FOR BRIDGE FENCE RAILING DETAILS.

N

NOT TO SCALE

MODEL: $MODELNAME$
FILE NAME: $FILEL$

USER NAME = $USER$	DESIGNED -	REVISED -
	DRAWN -	REVISED -
PLOT SCALE = $SCALE$	CHECKED -	REVISED -
PLOT DATE = $DATE$	DATE -	REVISED -

STATE OF ILLINOIS
DEPARTMENT OF TRANSPORTATION

DETAIL SHEET

SCALE: SHEET OF SHEETS STA. TO STA.

F.A.P. RTE.	SECTION	COUNTY	TOTAL SHEETS	SHEET NO.
873	(28-5) K-1	FRANKLIN	162	139
		CONTRACT NO. 78814		
		ILLINOIS	FED. AID PROJECT	

TEMPORARY DITCH CHECKS

PLACEMENT OF TEMPORARY DITCH CHECK IN DRAINAGE WAY

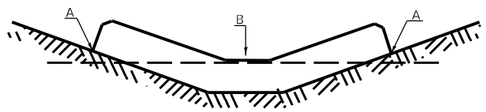

POINTS A SHOULD BE HIGHER THAN POINT B

SPACING BETWEEN TEMPORARY DITCH CHECKS

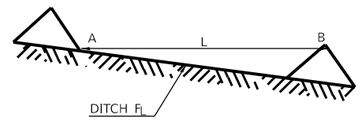

L = THE DISTANCE SUCH THAT POINTS A AND B ARE OF EQUAL ELEVATION

B = THE LOW POINT IN CENTER OF CHECK

REVISIONS

DRAWN	9-01-99
REVISED	10-3-01
RESIZED	5-8-08
REVISED	05-04-10
REVIEWED	5-17-13
REVISED	10-21-21

STD. 9-108

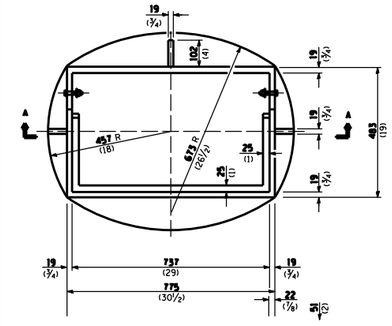

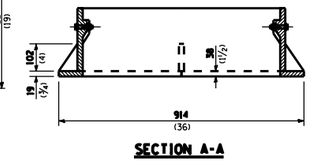

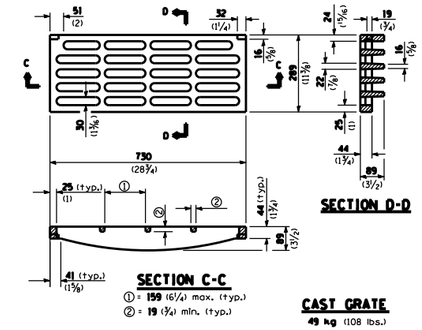

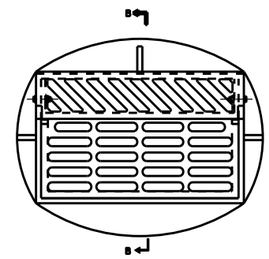

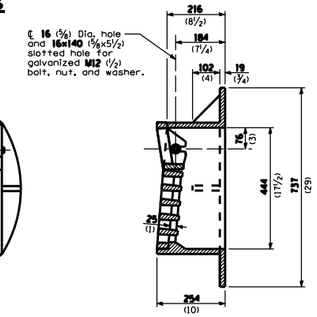

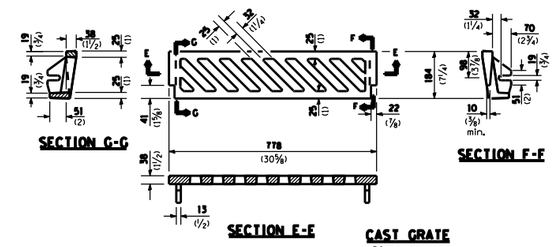

CAST GRATE
24 kg (52 lbs.)

All dimensions are in millimeters (inches) unless otherwise shown.

FRAME AND GRATE
TYPE 9C

SEEDING & MULCHING

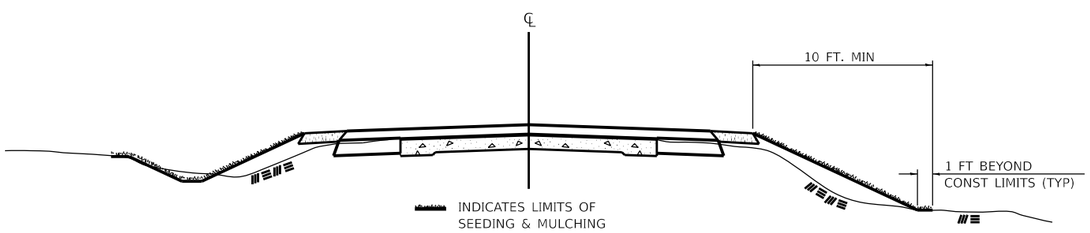

GENERAL NOTES

IN GENERAL, ALL EARTH SURFACES DISTURBED DURING CONSTRUCTION OPERATIONS SHALL BE SEEDED AND MULCHED UPON COMPLETION OF ALL GRADING OPERATIONS.

ON DETOUR ROADS, SLOPES SHALL BE SEEDED IMMEDIATELY UPON COMPLETION OF ANY GIVEN STAGE GRADING. TEMPORARY SEEDING SHALL BE CLASS 7.

FERTILIZER NUTRIENTS SHALL BE APPLIED TO ALL SEEDED AREAS. LIMESTONE SHALL BE APPLIED TO ALL AREAS OF FINAL SEEDING.

THE RATES OF APPLICATION OF FERTILIZER, MULCH AND LIMESTONE SHALL BE AS SPECIFIED IN THE SPECIAL PROVISIONS FOR ROAD AND BRIDGE CONSTRUCTION.

SECTIONS 250 AND 251 SHALL GOVERN THIS WORK EXCEPT AS SPECIFIED HEREIN OR AS NOTED IN THE SPECIAL PROVISIONS.

REVISIONS

REDRAWN	2-15-89
REVISED	8-15-94
REVISED	6-3-99
REVISED	3-27-08
REVISED	5-16-13
REVISED	10-21-21

STD. 9-12

PAVEMENT MARKING DETAIL MULTI-USE TRAIL

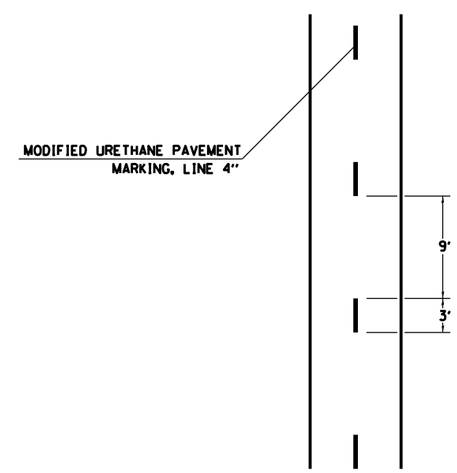

MODEL: $MODEL$NAME$
FILE NAME: $FILEL$

USER NAME = $USER$	DESIGNED -	REVISED -	STATE OF ILLINOIS DEPARTMENT OF TRANSPORTATION
	DRAWN -	REVISED -	
PLOT SCALE = $SCALE$	CHECKED -	REVISED -	
PLOT DATE = $DATE$	DATE -	REVISED -	

DETAIL SHEET

SCALE: SHEET OF SHEETS STA. TO STA.

F.A.P. RTE.	SECTION	COUNTY	TOTAL SHEETS	SHEET NO.
873	(28-5) K-1	FRANKLIN	162	140

CONTRACT NO. 78814

ILLINOIS FED. AID PROJECT

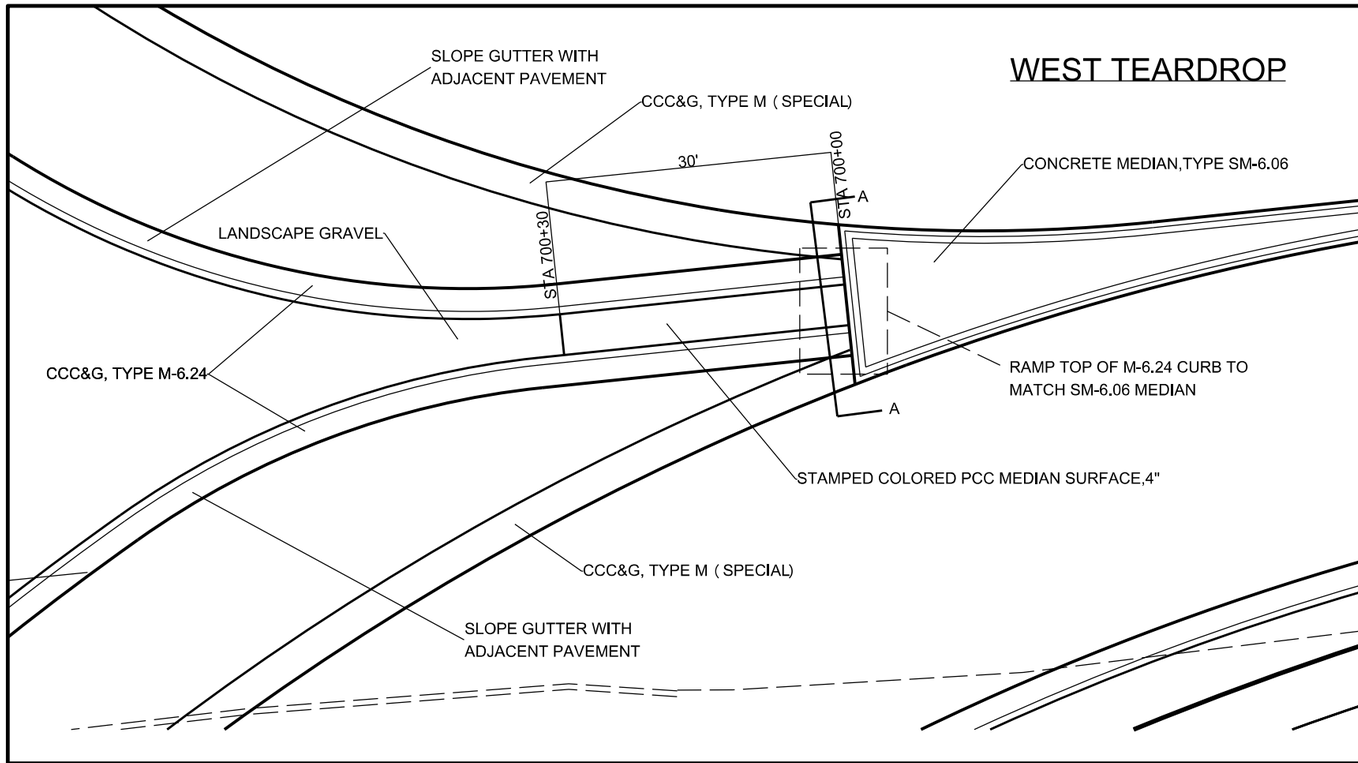

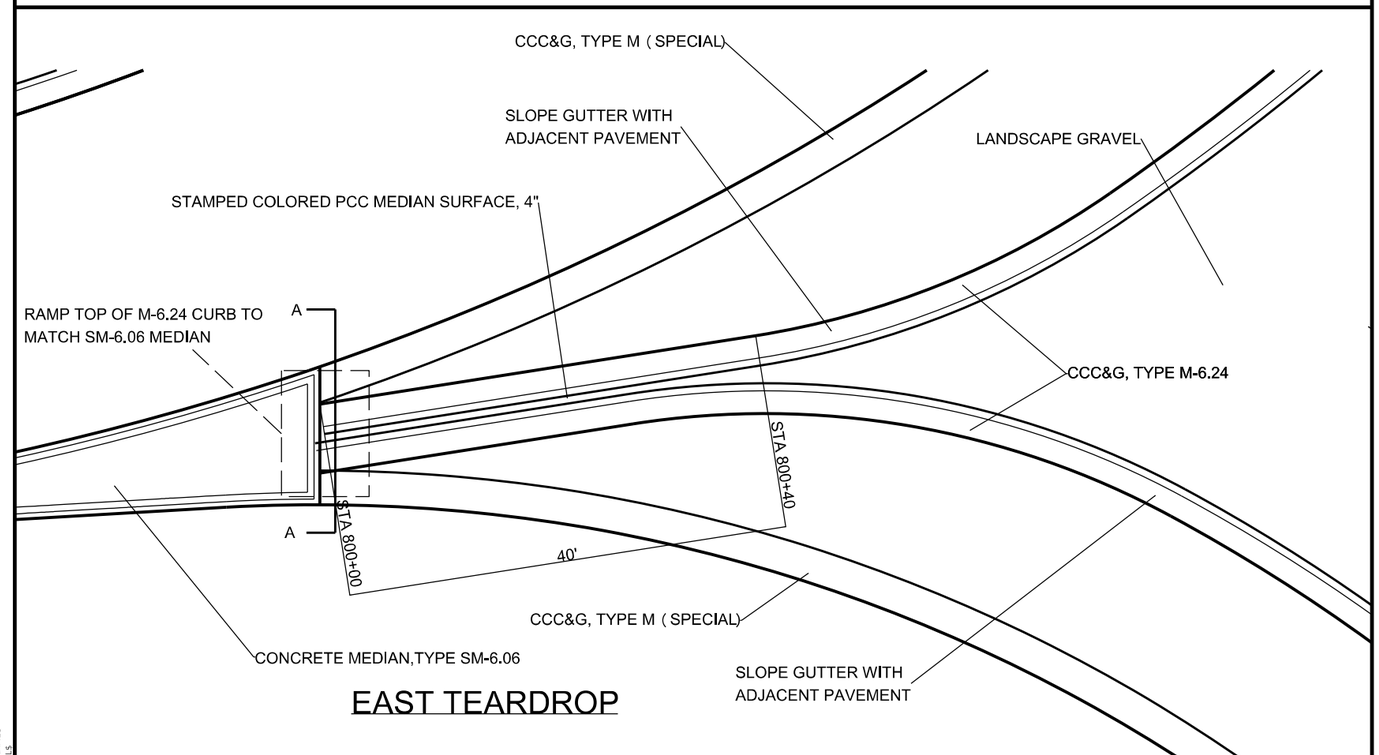

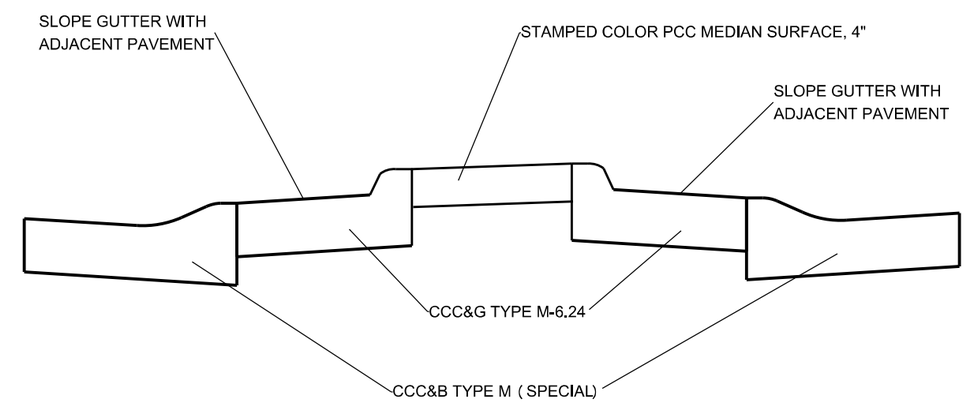

A-A

MODEL: $MODELNAME$
FILE NAME: $FILEL$

USER NAME = $USER$	DESIGNED -	REVISED -	STATE OF ILLINOIS DEPARTMENT OF TRANSPORTATION
	DRAWN -	REVISED -	
PLOT SCALE = $SCALE$	CHECKED -	REVISED -	
PLOT DATE = $DATE$	DATE -	REVISED -	

DETAIL SHEET

SCALE: SHEET OF SHEETS STA. TO STA.

F.A.P. RTE.	SECTION	COUNTY	TOTAL SHEETS	SHEET NO.
873	(28-5) K-1	FRANKLIN	162	141

CONTRACT NO. 78814

ILLINOIS FED. AID PROJECT

ENERGY DISSIPATOR

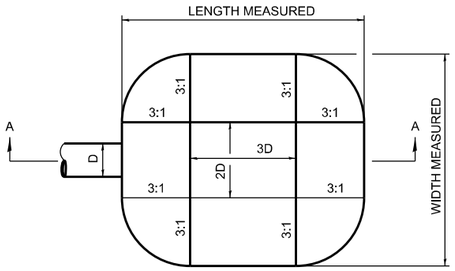

D= INSIDE DIAMETER OF PIPE CULVERT
OR CLEAR HEIGHT OF BOX CULVERT

PLAN

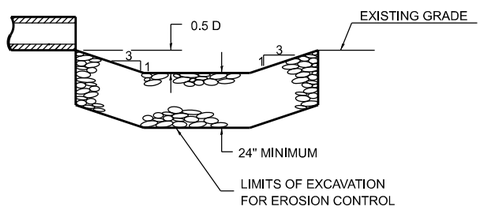

SECTION A–A

EARTH EXCAVATION FOR ENERGY DISSIPATOR

THIS WORK INVOLVES THE EXCAVATION OF EARTH AS SHOWN IN THE SKETCH TO THE LENGTH, WIDTH, AND DEPTH AS SPECIFIED. THE EARTH EXCAVATION WILL BE UTILIZED IN THE ROADWAY EMBANKMENT OR WASTED AS DIRECTED BY THE ENGINEER. THE EXCAVATION SHALL BE PERFORMED AT THE SAME TIME AS THE CULVERT OR DITCH IS CONSTRUCTED TO SERVE AS A TEMPORARY SEDIMENT TRAP.

EARTHWORK WILL BE CONSIDERED INCLUDED IN THE COST OF THE RIPRAP.

ENERGY DISSIPATOR IS TO BE CONSTRUCTED AT THE LOCATION INDICATED ON THE PLAN AND PROFILE SHEETS.

RIPRAP FOR ENERGY DISSIPATOR

RIPRAP FOR ENERGY DISSIPATOR SHALL BE CONSTRUCTED IN ACCORDANCE WITH SECTION 281 EXCEPT AS REVISED HEREIN.

THE LENGTH, WIDTH, AND DEPTH FOR RIPRAP PLACEMENT SHALL BE AS SPECIFIED IN THESE DETAILS UNLESS OTHERWISE SPECIFIED IN THE PLANS. THE OUTSIDE CORNERS CAN BE ROUNDED OR SQUARED.

THE RIPRAP FOR THE ENERGY DISSIPATOR SHALL BE PAID FOR AT THE CONTRACT UNIT PRICE PER SQUARE YARD FOR **STONE DUMPED RIPRAP.**

THE STONE DUMPED RIPRAP SHALL CONFORM TO THE QUALITY AND GRADATION REQUIREMENTS OF STONE RIPRAP, CLASS A4.

FILTER FABRIC AND BEDDING MATERIAL AS SPECIFIED IN SECTION 281 WILL NOT BE REQUIRED.

DRAWN	02-15-89
REVISED	03-26-08
REVISED	10-21-22
REVISED	05-03-22

STD. 9-06

TYPICAL DETAIL OF STONE RIPRAP DITCH LINING

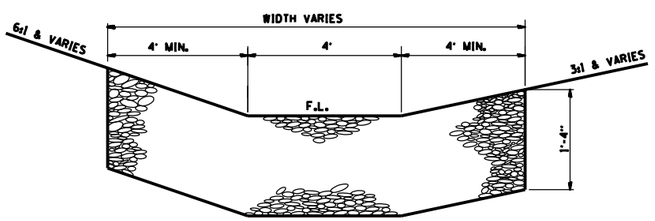

NOTES

THIS WORK INCLUDES THE EARTH EXCAVATION REQUIRED TO PLACE THE RIPRAP AS SHOWN. THE MATERIAL RESULTING FROM THE EARTH EXCAVATION SHALL BE PLACED IN THE ROADWAY EMBANKMENT, OR WASTED AS DIRECTED BY THE ENGINEER. THE EARTHWORK SHALL BE CONSIDERED INCLUDED IN THE COST OF THE DITCH.

THE RIPRAP DITCH SHALL BE CONSTRUCTED AT THE LOCATIONS SHOWN IN THE PLANS OR AS DIRECTED BY THE ENGINEER. CONSTRUCTION OF THE STONE RIPRAP DITCH SHALL CONFORM TO THE REQUIREMENTS FOR CLASS A4 RIPRAP AS INDICATED IN SECTION 281 OF STANDARD SPECIFICATIONS.

THIS WORK SHALL BE PAID FOR AT THE CONTRACT UNIT PRICE PER SQ YD FOR **STONE RIPRAP, CLASS A4,** WHICH PRICE SHALL INCLUDE ALL MATERIAL, LABOR AND EQUIPMENT TO COMPLETE THE WORK IN PLACE AS SHOWN.

BEDDING MATERIAL AND FILTER FABRIC AS SPECIFIED IN SECTION 281 OF THE STANDARD SPECIFICATIONS WILL NOT BE REQUIRED.

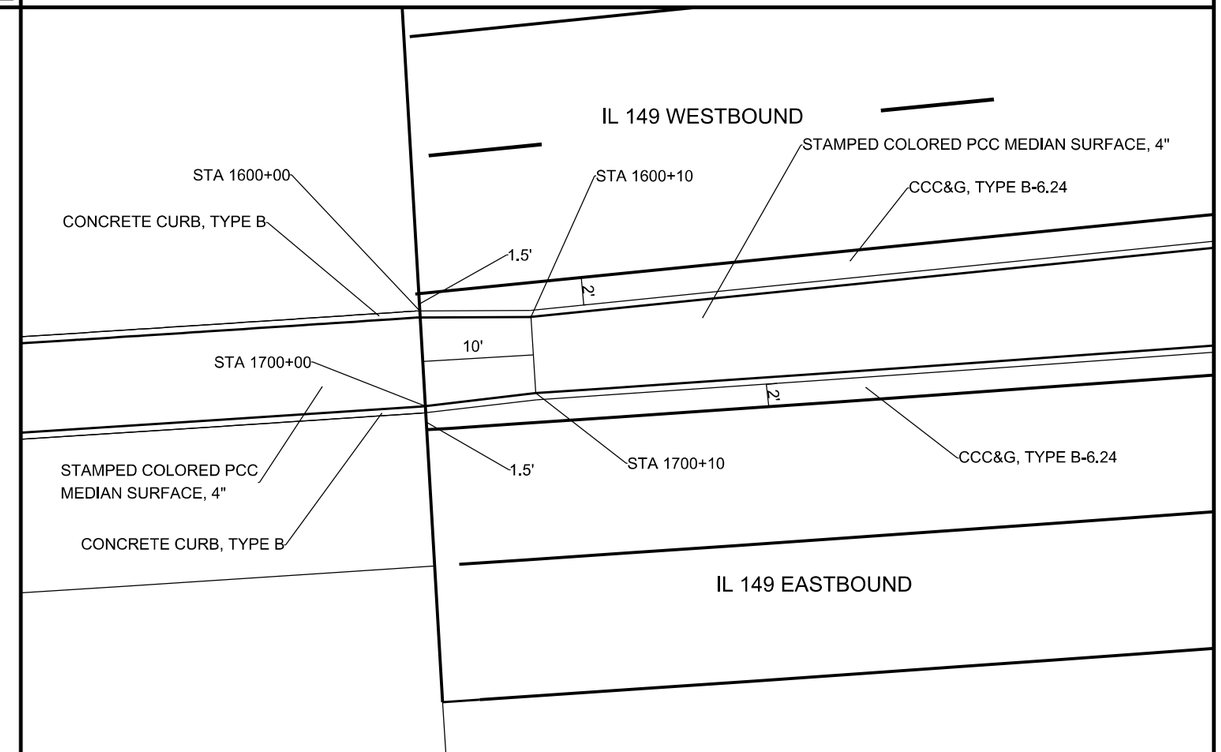

MODEL: $MODELNAME$
FILE NAME: $FILEL$

USER NAME = $USER$	DESIGNED -	REVISED -	
	DRAWN -	REVISED -	
PLOT SCALE = $SCALE$	CHECKED -	REVISED -	
PLOT DATE = $DATE$	DATE -	REVISED -	

STATE OF ILLINOIS
DEPARTMENT OF TRANSPORTATION

DETAIL SHEET

SCALE: | SHEET OF SHEETS | STA. TO STA.

F.A.P. RTE.	SECTION	COUNTY	TOTAL SHEETS	SHEET NO.
873	(28-5) K-1	FRANKLIN	162	142

CONTRACT NO. 78814

ILLINOIS | FED. AID PROJECT

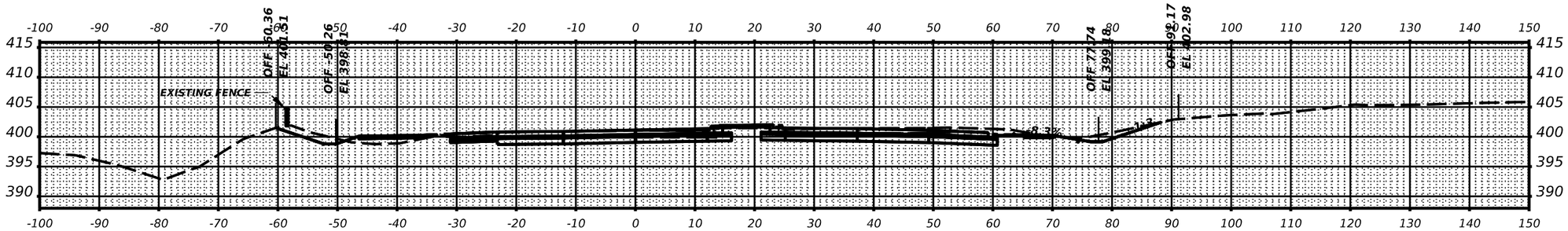

STA 1600+75.00

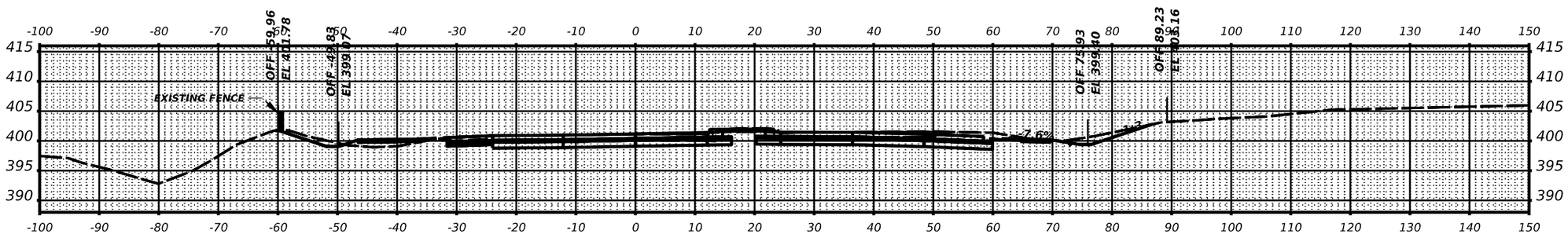

STA 1600+50.00

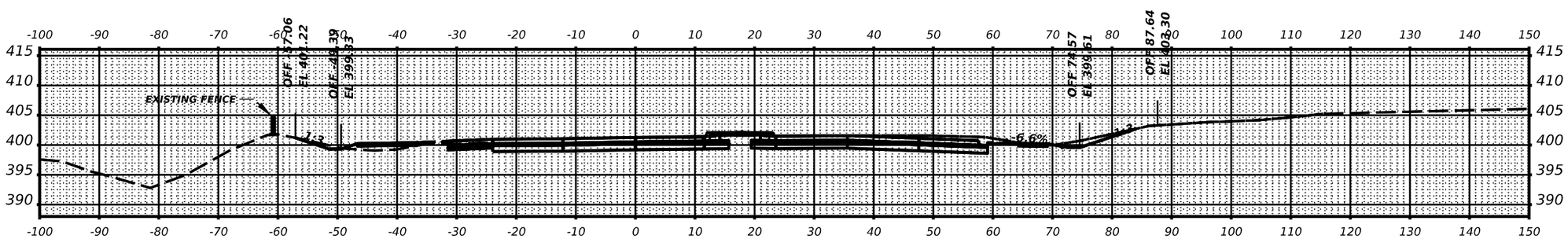

STA 1600+25.00

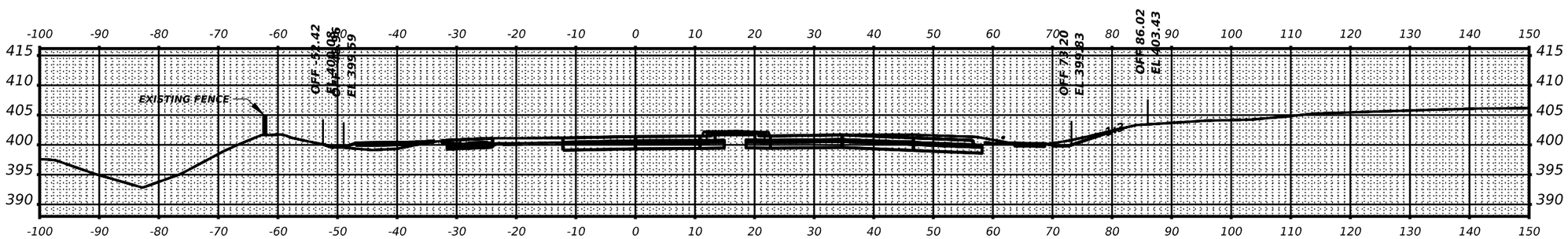

STA 1600+00.00

USER NAME = $USER$	DESIGNED - _____	REVISED - _____	STATE OF ILLINOIS DEPARTMENT OF TRANSPORTATION
	DRAWN - _____	REVISED - _____	
PLOT SCALE = $SCALE$	CHECKED - _____	REVISED - _____	
PLOT DATE = $DATE$	DATE - _____	REVISED - _____	

IL 149 CROSS SECTIONS

SCALE: _____ SHEET __ OF __ SHEETS STA. _____

F.A.P. RTE.	SECTION	COUNTY	TOTAL SHEETS	SHEET NO.
873	(28-5)K-1	FRANKLIN	162	143

CONTRACT NO. 78814

ILLINOIS FED. AID PROJECT

FINAL SURVEY		BY	DATE
NOTE BOOK	SURVEYED		
	PLOTTED		
	TEMPLATE		
	AREAS		
NO.	AREAS CHECKED		

ORIGINAL SURVEY		BY	DATE
NOTE BOOK	SURVEYED		
	PLOTTED		
	TEMPLATE		
	AREAS		
NO.	AREAS CHECKED		

MODEL: $MODELNAME$
FILE NAME: $FILEL$

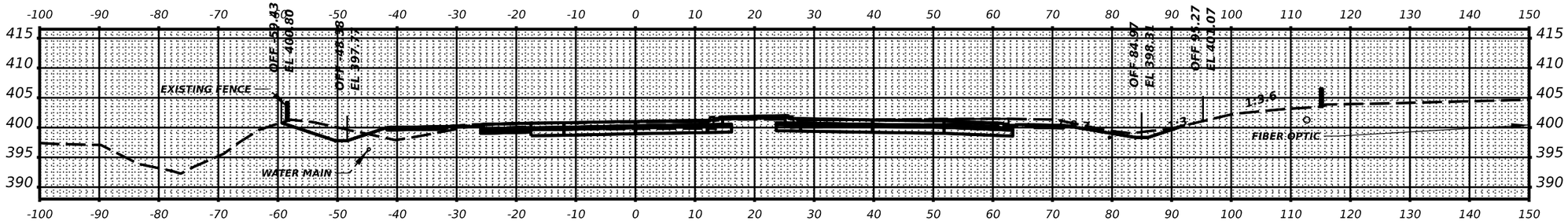

STA 1601+75.00

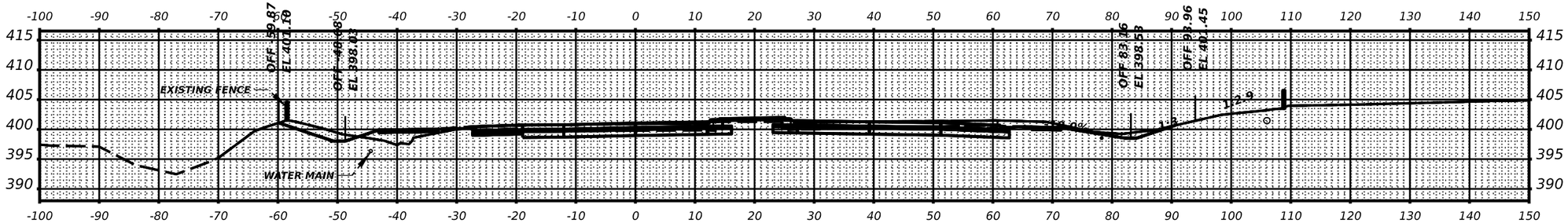

STA 1601+50.00

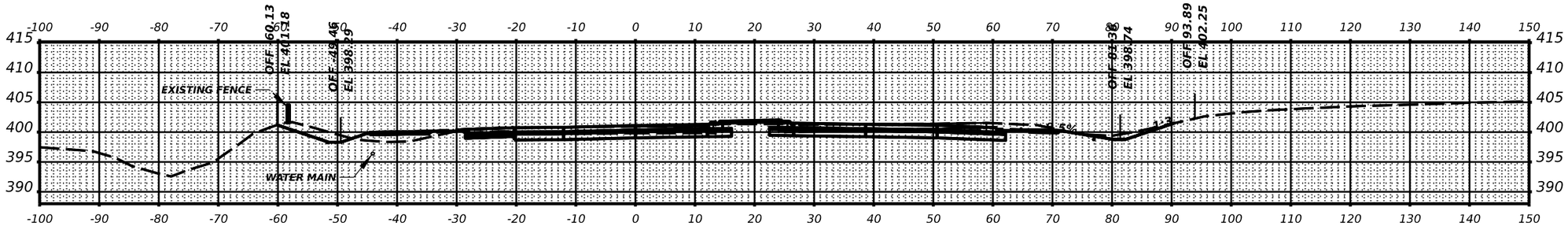

STA 1601+25.00

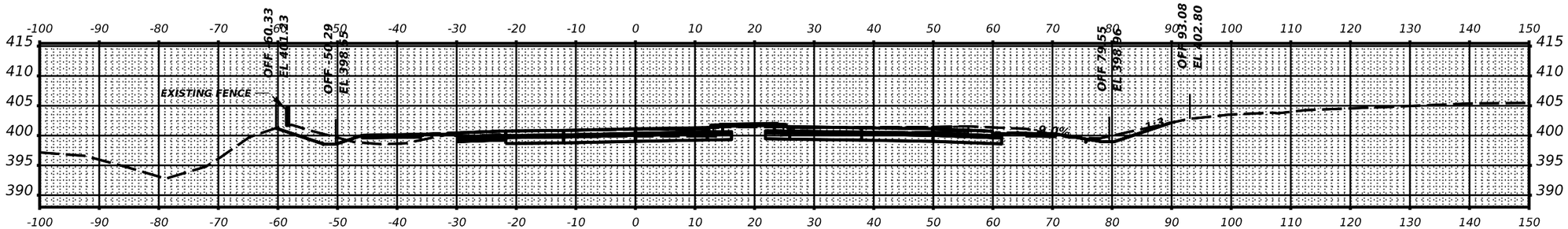

STA 1601+00.00

USER NAME = $USER$	DESIGNED - _____	REVISED - _____	STATE OF ILLINOIS DEPARTMENT OF TRANSPORTATION
	DRAWN - _____	REVISED - _____	
PLOT SCALE = $SCALE$	CHECKED - _____	REVISED - _____	
PLOT DATE = $DATE$	DATE - _____	REVISED - _____	

IL 149 CROSS SECTIONS

SCALE: _____ SHEET __ OF __ SHEETS STA. _____

F.A.P. RTE.	SECTION	COUNTY	TOTAL SHEETS	SHEET NO.
873	(28-5)K-1	FRANKLIN	162	144

CONTRACT NO. 78814

ILLINOIS FED. AID PROJECT

FINAL SURVEY		BY	DATE
NOTE BOOK NO.	SURVEYED		
	PLOTTED		
	TEMPLATE		
	AREAS		
	AREAS CHECKED		

ORIGINAL SURVEY		BY	DATE
NOTE BOOK NO.	SURVEYED		
	PLOTTED		
	TEMPLATE		
	AREAS		
	AREAS CHECKED		

MODEL: $MODELNAME$
FILE NAME: $FILE$

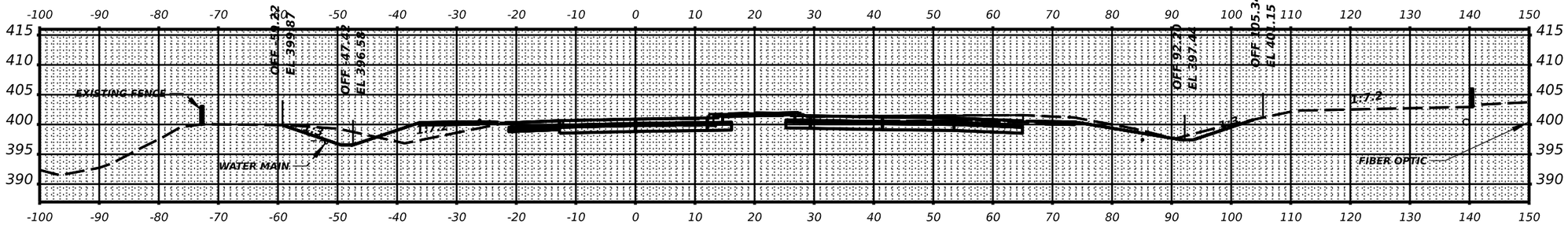

STA 1602+75.00

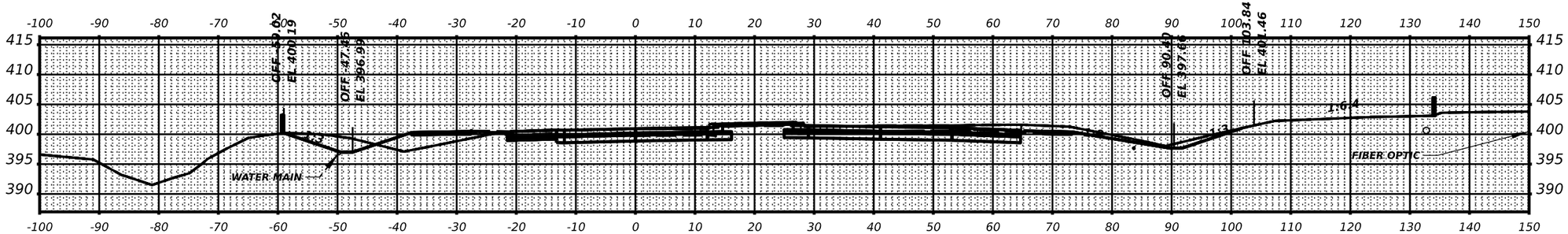

STA 1602+50.00

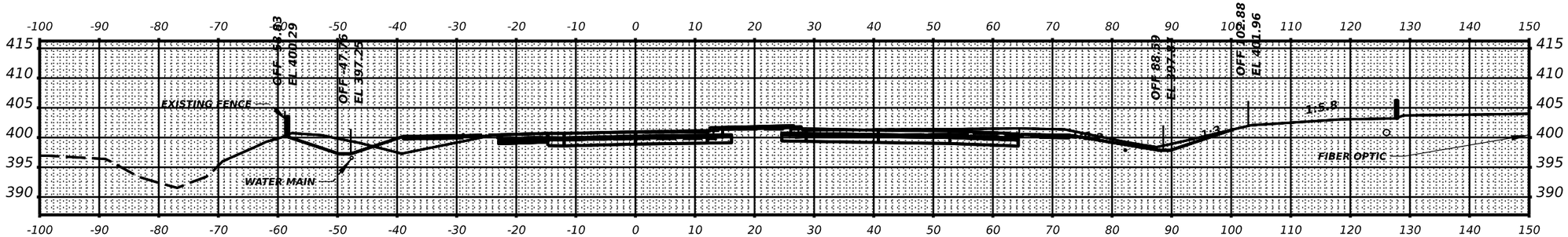

STA 1602+25.00

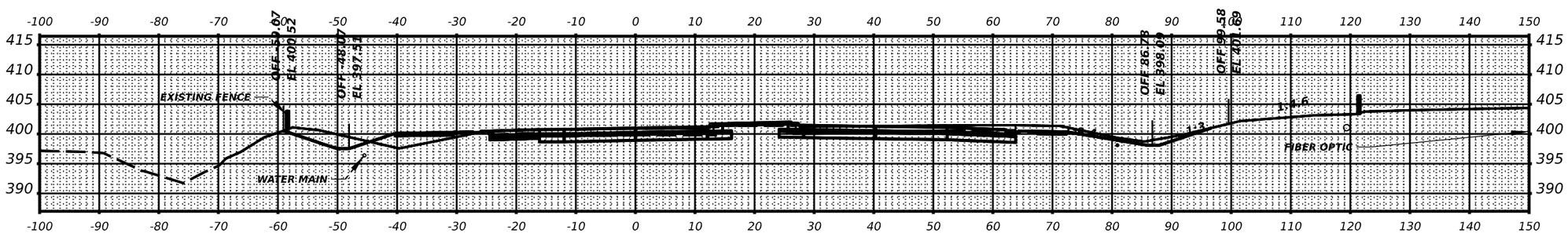

STA 1602+00.00

USER NAME = $USER$	DESIGNED - _____	REVISED - _____	
	DRAWN - _____	REVISED - _____	
PLOT SCALE = $SCALE$	CHECKED - _____	REVISED - _____	
PLOT DATE = $DATE$	DATE - _____	REVISED - _____	

STATE OF ILLINOIS
DEPARTMENT OF TRANSPORTATION

IL 149 CROSS SECTIONS

SCALE: _____ SHEET __ OF __ SHEETS STA. _____

F.A.P. RTE.	SECTION	COUNTY	TOTAL SHEETS	SHEET NO.
873	(28-5)K-1	FRANKLIN	162	145

CONTRACT NO. 78814

ILLINOIS FED. AID PROJECT

FINAL SURVEY			
NOTE BOOK	SURVEYED		DATE
	PLOTTED		BY
	TEMPLATE		
	AREAS		
NO.	AREAS CHECKED		

ORIGINAL SURVEY			
NOTE BOOK	SURVEYED		DATE
	PLOTTED		BY
	TEMPLATE		
	AREAS		
NO.	AREAS CHECKED		

MODEL: $MODELNAME$
FILE NAME: $FILE$

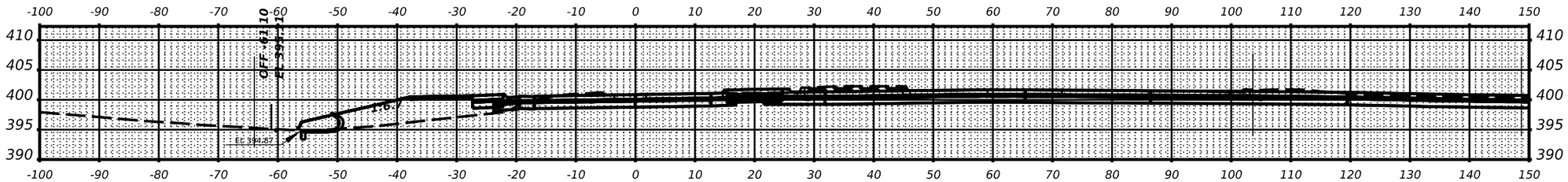

STA 1603+75.00

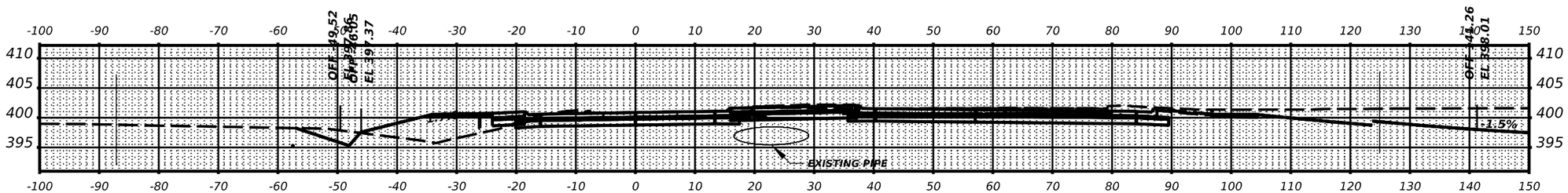

STA 1603+50.00

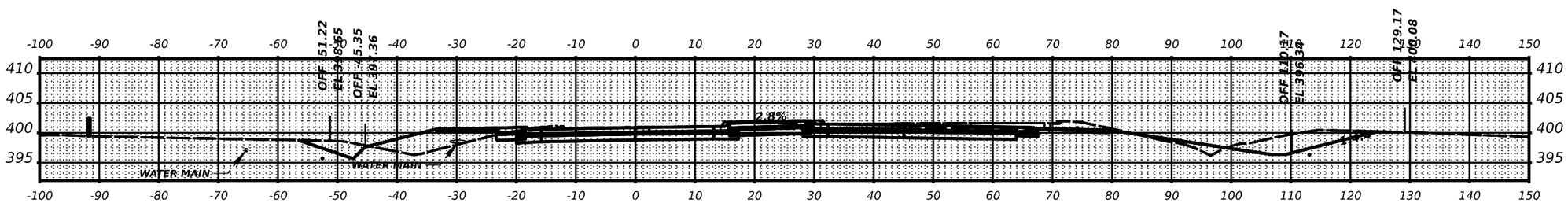

STA 1603+25.00

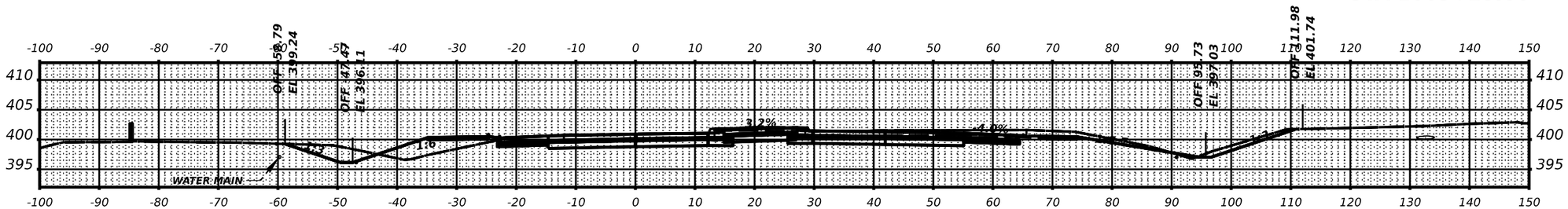

STA 1603+00.00

USER NAME = $USER$	DESIGNED - _____	REVISED - _____	
	DRAWN - _____	REVISED - _____	
PLOT SCALE = $SCALE$	CHECKED - _____	REVISED - _____	
PLOT DATE = $DATE$	DATE - _____	REVISED - _____	

STATE OF ILLINOIS
DEPARTMENT OF TRANSPORTATION

IL 149 CROSS SECTIONS

SCALE: _____ | SHEET __ OF __ SHEETS | STA. _____

F.A.P. RTE.	SECTION	COUNTY	TOTAL SHEETS	SHEET NO.
873	(28-5)K-1	FRANKLIN	162	146
		CONTRACT NO. 78814		
		ILLINOIS	FED. AID PROJECT	

FINAL SURVEY: NOTE BOOK NO. ___ SURVEYED ___ PLOTTED ___ TEMPLATE ___ AREAS ___ AREAS CHECKED ___ BY ___ DATE ___

ORIGINAL SURVEY: NOTE BOOK NO. ___ SURVEYED ___ PLOTTED ___ TEMPLATE ___ AREAS ___ AREAS CHECKED ___ BY ___ DATE ___

MODEL: $MODELNAME$
FILE NAME: $FILEL$

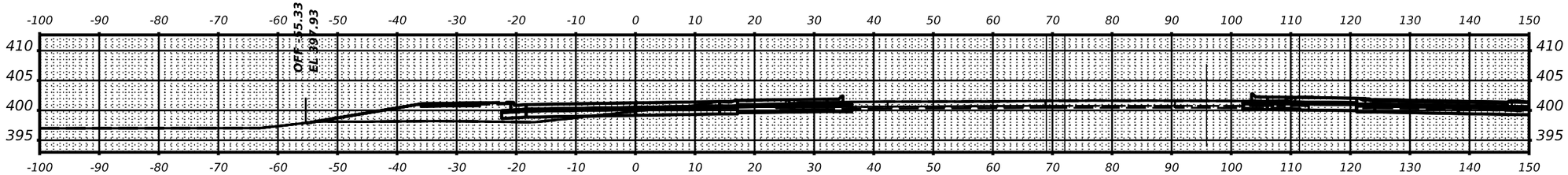

STA 1605+00.00

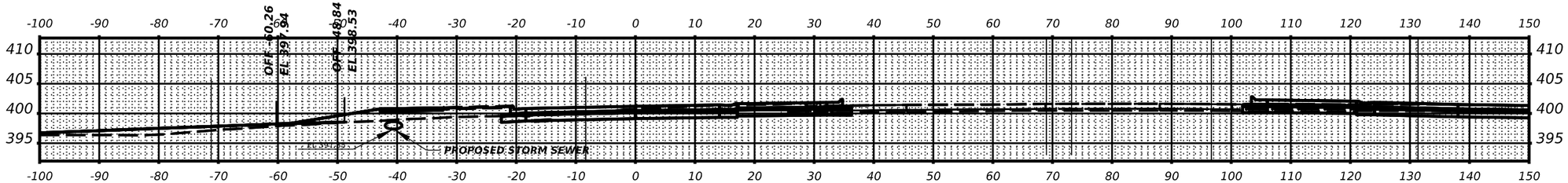

STA 1604+75.00

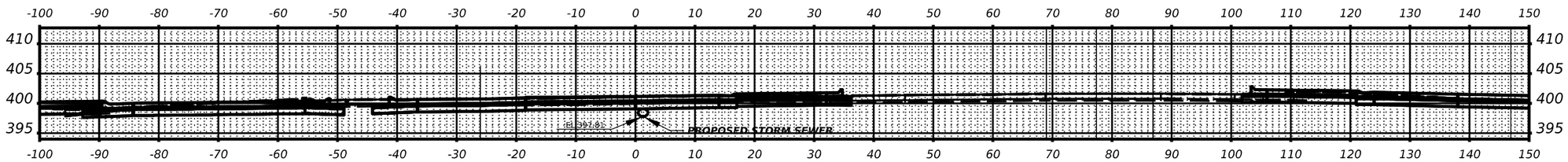

STA 1604+50.00

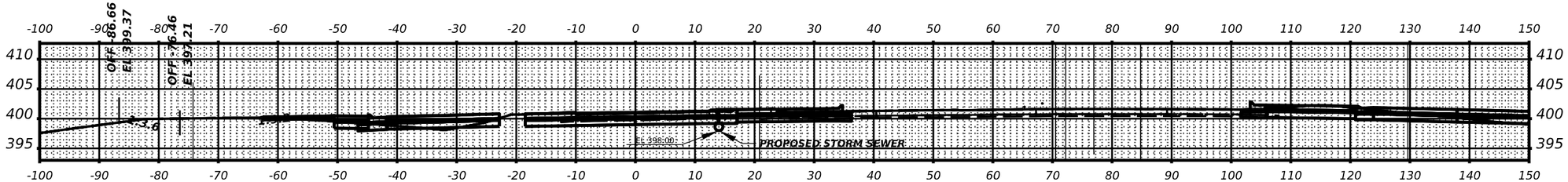

STA 1604+25.00

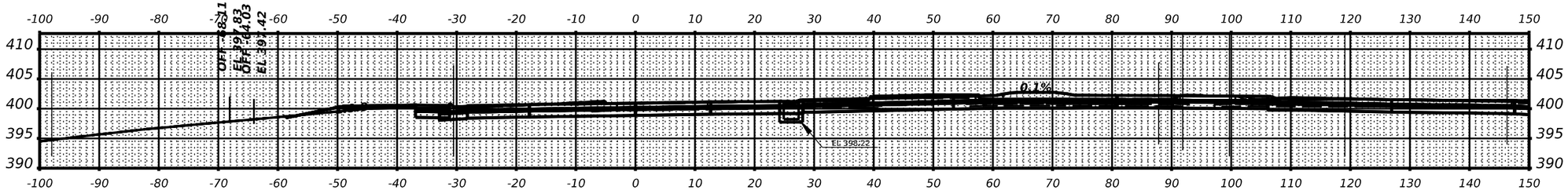

STA 1604+00.00

USER NAME = $USER$	DESIGNED - _____	REVISED - _____	STATE OF ILLINOIS DEPARTMENT OF TRANSPORTATION
	DRAWN - _____	REVISED - _____	
PLOT SCALE = $SCALE$	CHECKED - _____	REVISED - _____	
PLOT DATE = $DATE$	DATE - _____	REVISED - _____	

IL 149 CROSS SECTIONS

SCALE: _____ SHEET __ OF __ SHEETS STA. _____

F.A.P. RTE.	SECTION	COUNTY	TOTAL SHEETS	SHEET NO.
873	(28-5)K-1	FRANKLIN	162	147

CONTRACT NO. 78814

ILLINOIS FED. AID PROJECT

FINAL SURVEY: NOTE BOOK NO. ___ SURVEYED ___ PLOTTED ___ TEMPLATE ___ AREAS ___ AREAS CHECKED ___ BY ___ DATE ___

ORIGINAL SURVEY: NOTE BOOK NO. ___ SURVEYED ___ PLOTTED ___ TEMPLATE ___ AREAS ___ AREAS CHECKED ___ BY ___ DATE ___

MODEL: $MODEL$ NAMES
FILE NAME: $FILE$

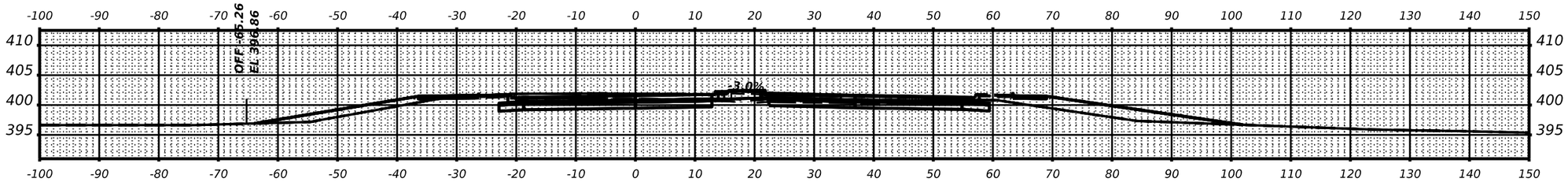

STA 1606+00.00

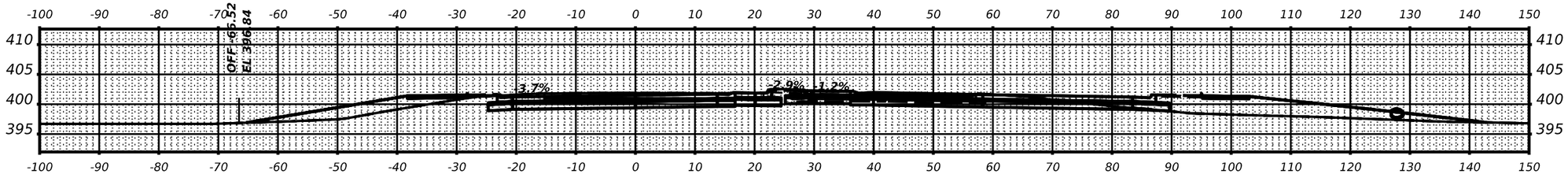

STA 1605+75.00

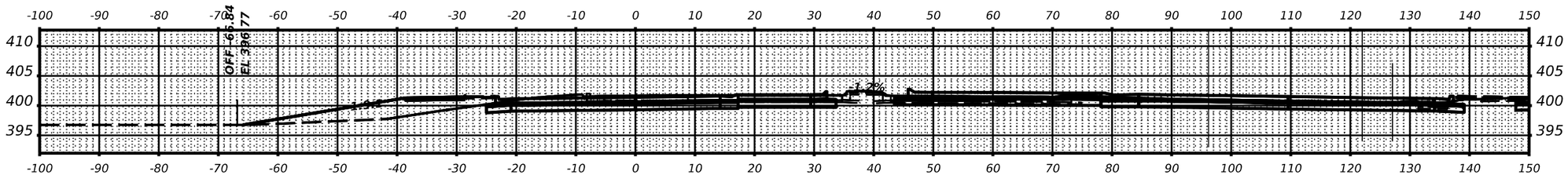

STA 1605+50.00

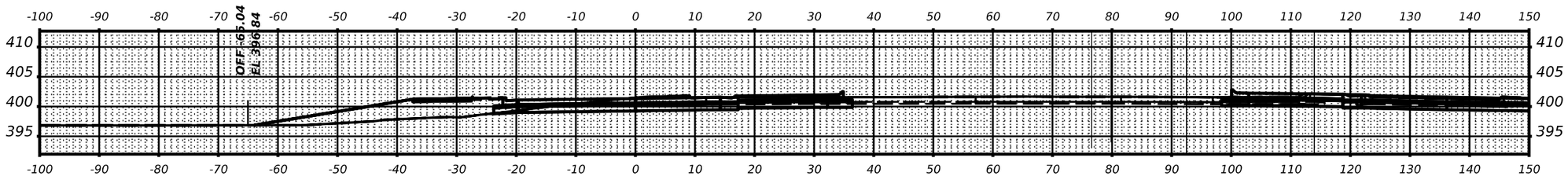

STA 1605+25.00

USER NAME = $USER$	DESIGNED - _____	REVISED - _____	STATE OF ILLINOIS DEPARTMENT OF TRANSPORTATION
	DRAWN - _____	REVISED - _____	
PLOT SCALE = $SCALE$	CHECKED - _____	REVISED - _____	
PLOT DATE = $DATE$	DATE - _____	REVISED - _____	

IL 149 CROSS SECTIONS

SCALE: _____ SHEET __ OF __ SHEETS STA. _____

F.A.P. RTE.	SECTION	COUNTY	TOTAL SHEETS	SHEET NO.
873	(28-5)K-1	FRANKLIN	162	148

CONTRACT NO. 78814

ILLINOIS | FED. AID PROJECT

FINAL SURVEY — NOTE BOOK NO. — SURVEYED — PLOTTED — TEMPLATE — AREAS — AREAS CHECKED — BY — DATE

ORIGINAL SURVEY — NOTE BOOK NO. — SURVEYED — PLOTTED — TEMPLATE — AREAS — AREAS CHECKED — BY — DATE

MODEL: $MODELNAME$
FILE NAME: $FILE$

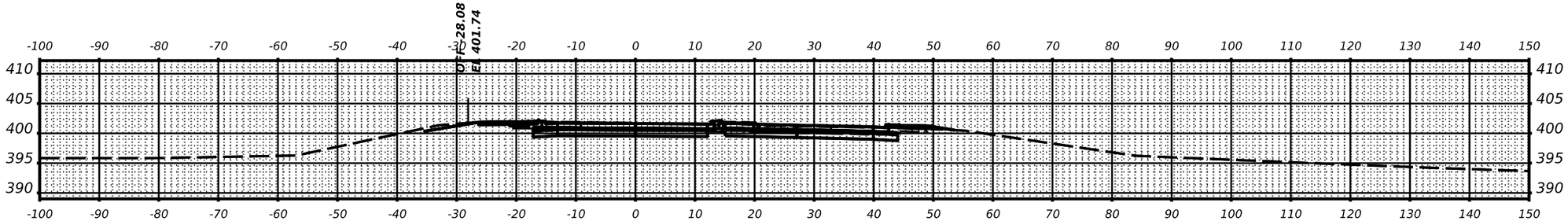

STA 1607+00.00

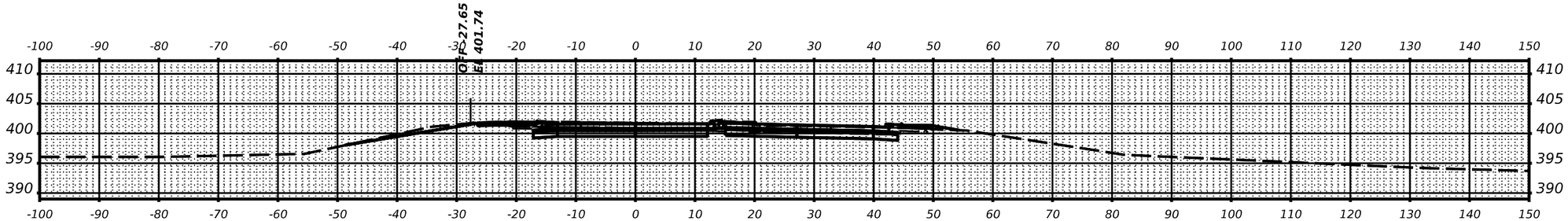

STA 1606+75.00

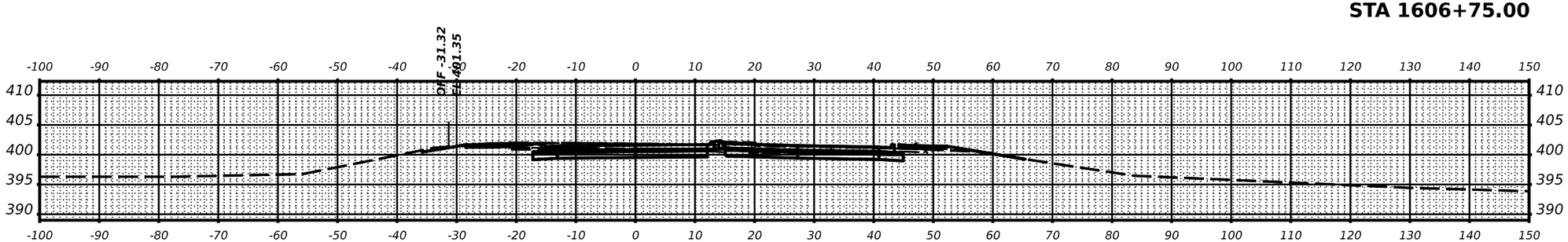

STA 1606+50.00

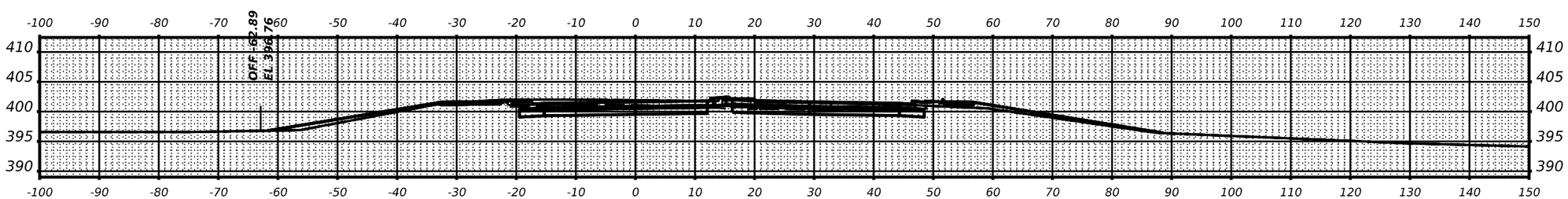

STA 1606+25.00

FINAL SURVEY	DATE	BY
SURVEYED		
PLOTTED		
TEMPLATE		
AREAS		
AREAS CHECKED		
NOTE BOOK NO.		

ORIGINAL SURVEY	DATE	BY
SURVEYED		
PLOTTED		
TEMPLATE		
AREAS		
AREAS CHECKED		
NOTE BOOK NO.		

MODEL: $MODELNAME$
FILE NAME: $FILEL$

USER NAME = $USER$	DESIGNED -	REVISED -
	DRAWN -	REVISED -
PLOT SCALE = $SCALE$	CHECKED -	REVISED -
PLOT DATE = $DATE$	DATE -	REVISED -

STATE OF ILLINOIS
DEPARTMENT OF TRANSPORTATION

IL 149 CROSS SECTIONS

SCALE: | SHEET OF SHEETS | STA.

F.A.P. RTE.	SECTION	COUNTY	TOTAL SHEETS	SHEET NO.
873	(28-5)K-1	FRANKLIN	162	149

CONTRACT NO. 78814

ILLINOIS | FED. AID PROJECT

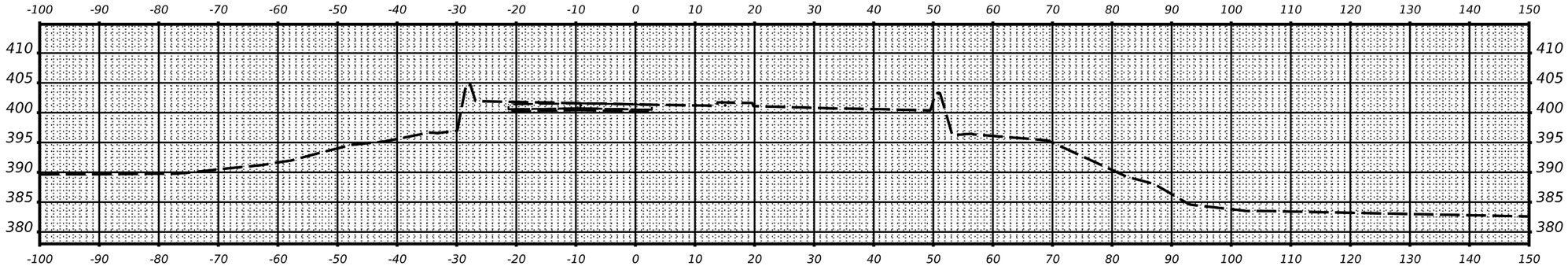

STA 1607+88.35

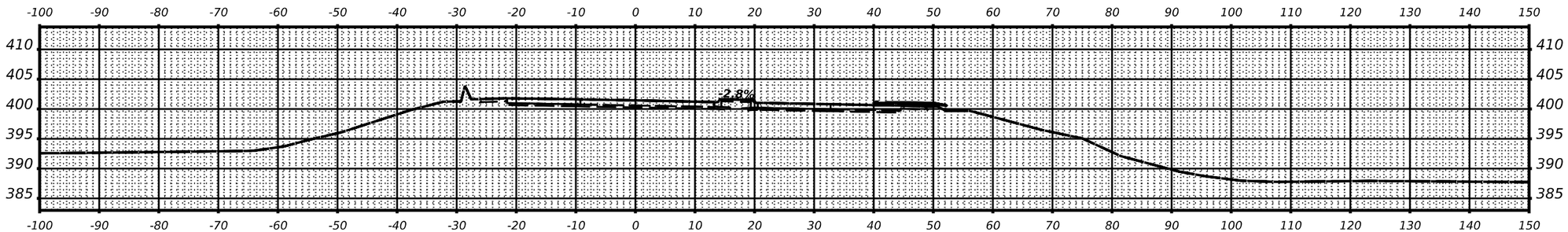

STA 1607+75.00

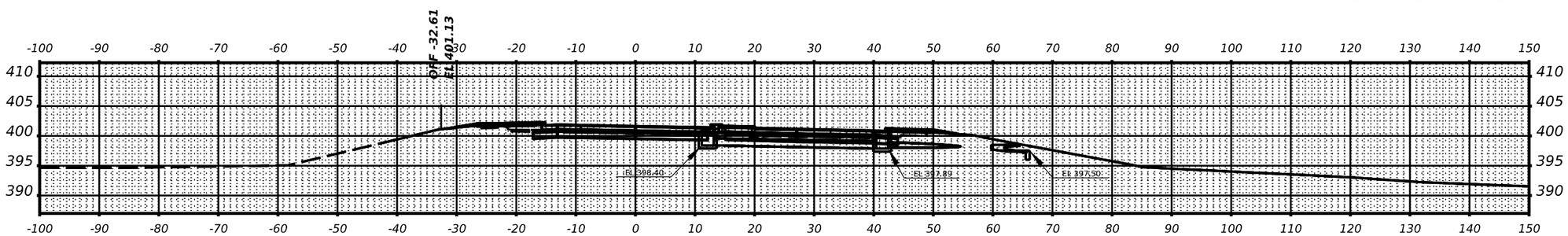

STA 1607+50.00

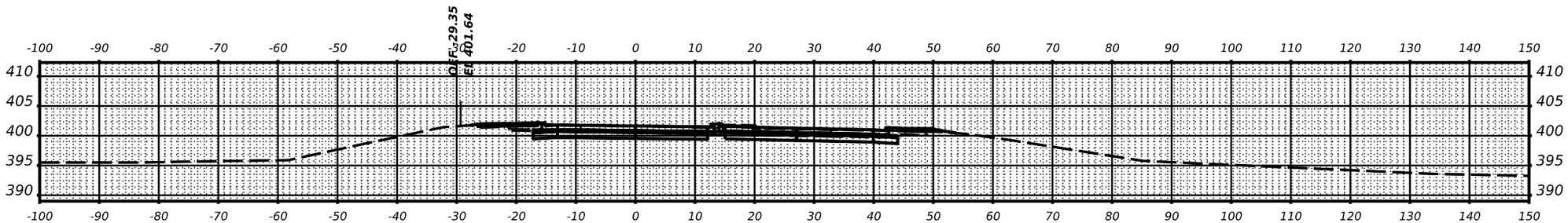

STA 1607+25.00

FINAL SURVEY	DATE	BY
SURVEYED		
PLOTTED		
TEMPLATE		
AREAS		
AREAS CHECKED		
NOTE BOOK NO.		

ORIGINAL SURVEY	DATE	BY
SURVEYED		
PLOTTED		
TEMPLATE		
AREAS		
AREAS CHECKED		
NOTE BOOK NO.		

MODEL: $MODELNAME$
FILE NAME: $FILE$

USER NAME = $USER$	DESIGNED - _____	REVISED - _____
	DRAWN - _____	REVISED - _____
PLOT SCALE = $SCALE$	CHECKED - _____	REVISED - _____
PLOT DATE = $DATE$	DATE - _____	REVISED - _____

STATE OF ILLINOIS
DEPARTMENT OF TRANSPORTATION

IL 149 CROSS SECTIONS

SCALE: _____ | SHEET __ OF __ SHEETS | STA. _____

F.A.P. RTE.	SECTION	COUNTY	TOTAL SHEETS	SHEET NO.
873	(28-5)K-1	FRANKLIN	162	150

CONTRACT NO. 78814

ILLINOIS | FED. AID PROJECT

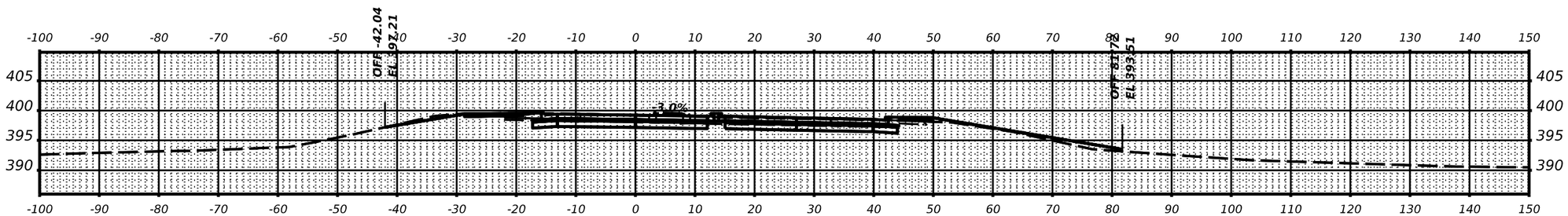

STA 1610+50.00

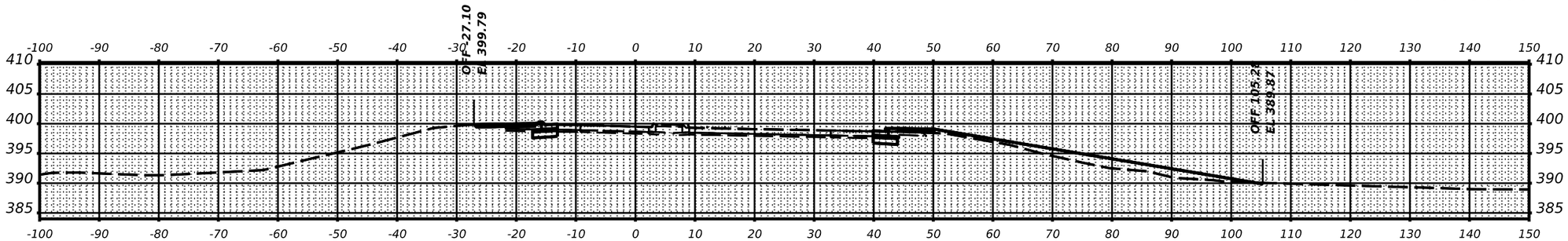

STA 1610+25.00

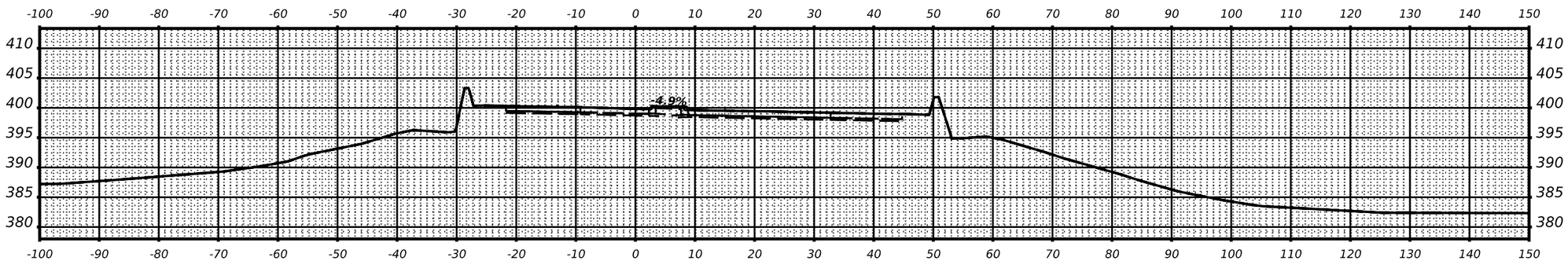

STA 1610+00.00

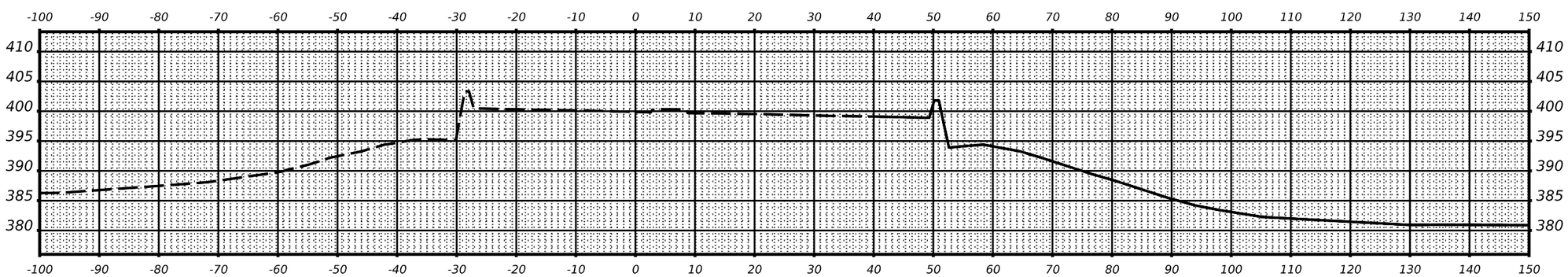

STA 1609+95.66

FINAL SURVEY		BY	DATE
NOTE BOOK	SURVEYED		
	PLOTTED		
	TEMPLATE		
	AREAS		
NO.	AREAS CHECKED		

ORIGINAL SURVEY		BY	DATE
NOTE BOOK	SURVEYED		
	PLOTTED		
	TEMPLATE		
	AREAS		
NO.	AREAS CHECKED		

MODEL: $MODELNAME$
FILE NAME: $FILEL$

USER NAME = $USER$	DESIGNED - _____	REVISED - _____
	DRAWN - _____	REVISED - _____
PLOT SCALE = $SCALE$	CHECKED - _____	REVISED - _____
PLOT DATE = $DATE$	DATE - _____	REVISED - _____

STATE OF ILLINOIS
DEPARTMENT OF TRANSPORTATION

IL 149 CROSS SECTIONS

SCALE: _____ | SHEET __ OF __ SHEETS | STA. _____

F.A.P. RTE.	SECTION	COUNTY	TOTAL SHEETS	SHEET NO.
873	(28-5)K-1	FRANKLIN	162	151
		CONTRACT NO. 78814		
		ILLINOIS	FED. AID PROJECT	

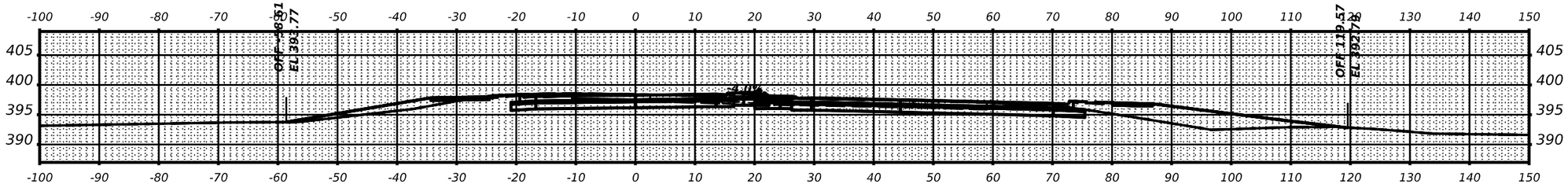

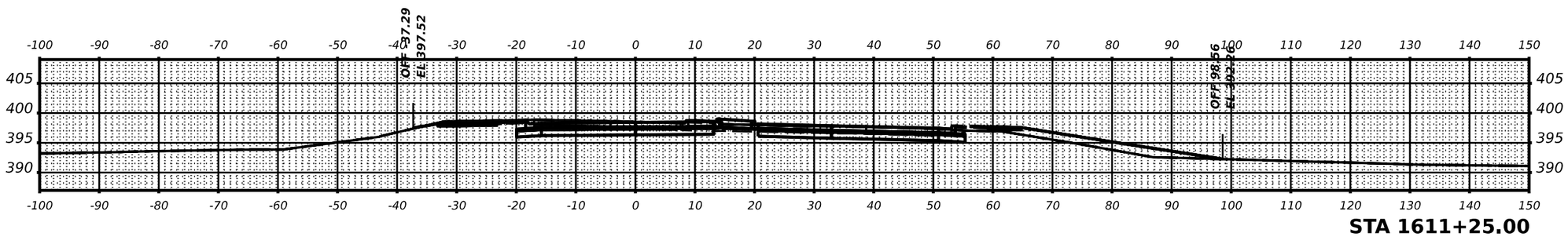

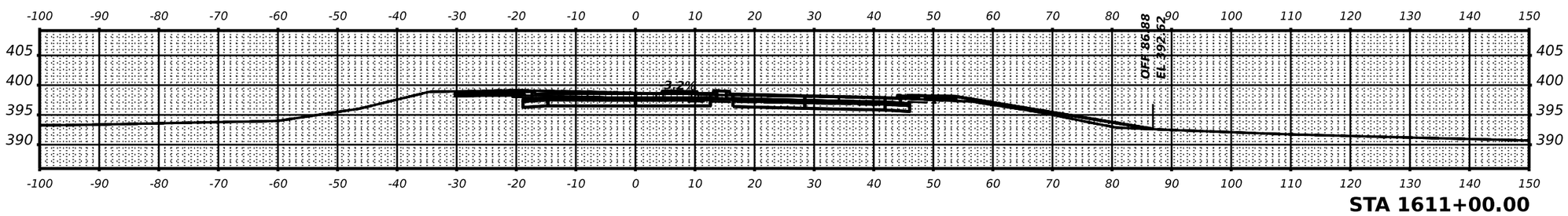

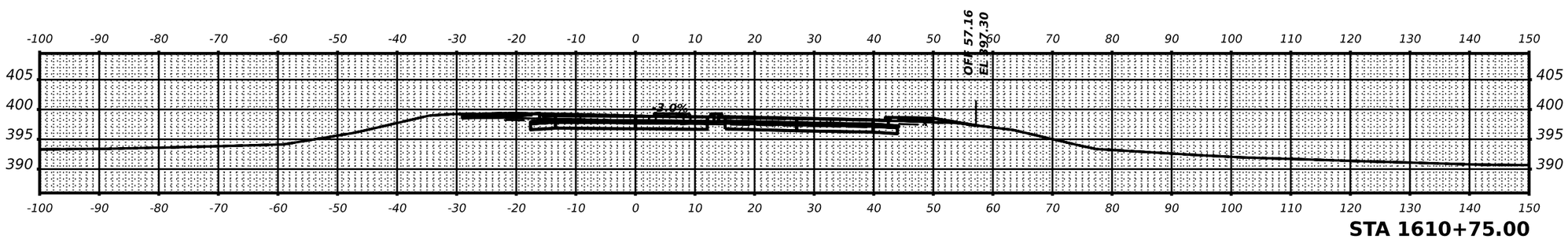

FINAL SURVEY	DATE	BY
SURVEYED		
PLOTTED		
TEMPLATE		
AREAS		
AREAS CHECKED		
NOTE BOOK NO.		

ORIGINAL SURVEY	DATE	BY
SURVEYED		
PLOTTED		
TEMPLATE		
AREAS		
AREAS CHECKED		
NOTE BOOK NO.		

MODEL: $MODELNAME$
FILE NAME: $FILEL$

USER NAME = $USER$	DESIGNED - _____	REVISED - _____
	DRAWN - _____	REVISED - _____
PLOT SCALE = $SCALE$	CHECKED - _____	REVISED - _____
PLOT DATE = $DATE$	DATE - _____	REVISED - _____

STATE OF ILLINOIS
DEPARTMENT OF TRANSPORTATION

IL 149 CROSS SECTIONS

SCALE: _____ | SHEET __ OF __ SHEETS | STA. _____

F.A.P. RTE.	SECTION	COUNTY	TOTAL SHEETS	SHEET NO.
873	(28-5)K-1	FRANKLIN	162	152

CONTRACT NO. 78814

ILLINOIS | FED. AID PROJECT

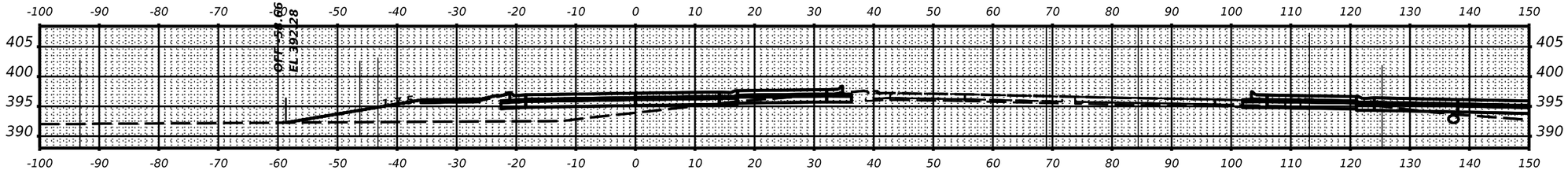

STA 1612+75.00

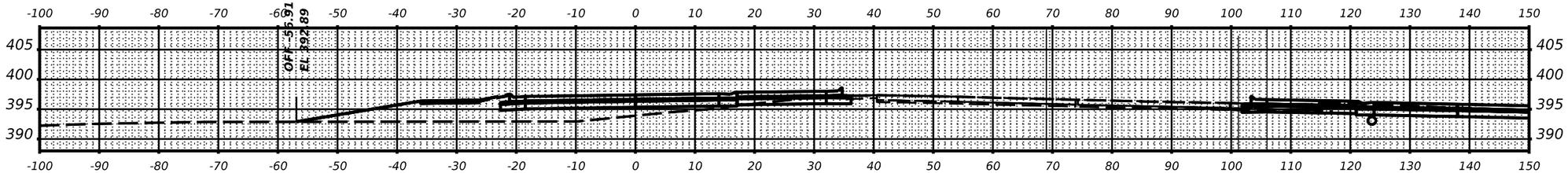

STA 1612+50.00

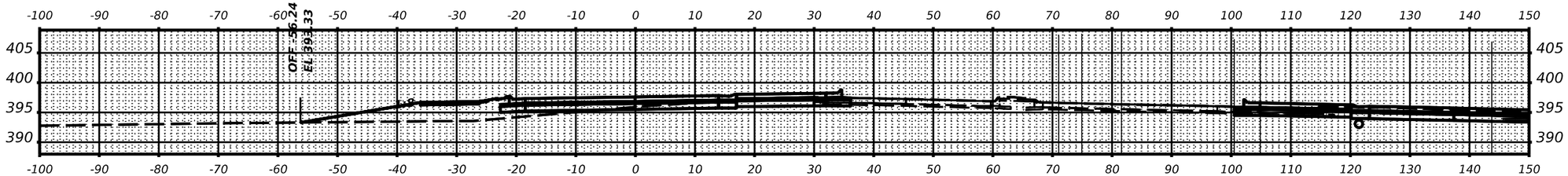

STA 1612+25.00

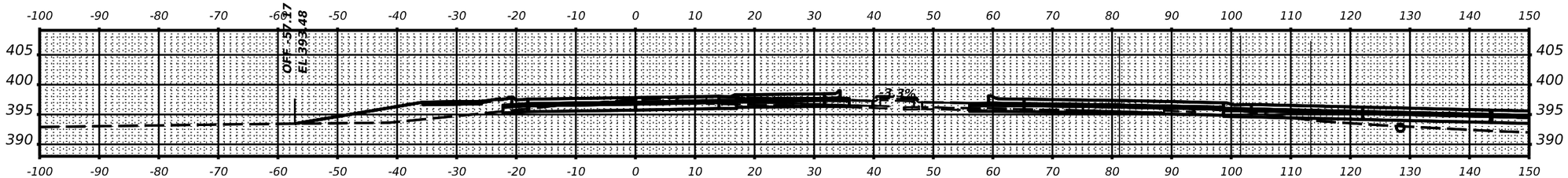

STA 1612+00.00

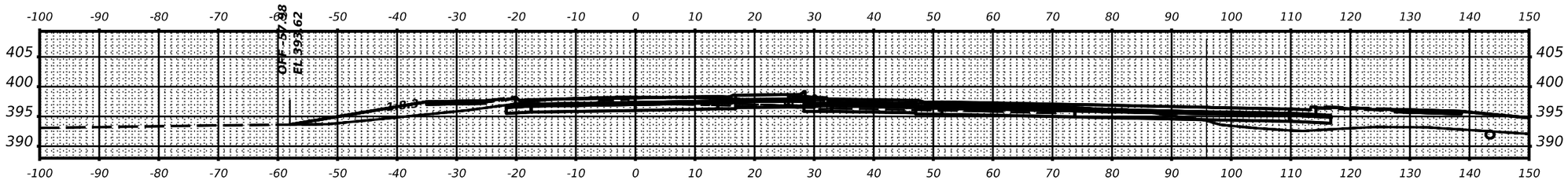

STA 1611+75.00

FINAL SURVEY			
NOTE BOOK	SURVEYED	BY	DATE
NO.	PLOTTED		
	TEMPLATE		
	AREAS		
	AREAS CHECKED		

ORIGINAL SURVEY			
NOTE BOOK	SURVEYED	BY	DATE
NO.	PLOTTED		
	TEMPLATE		
	AREAS		
	AREAS CHECKED		

MODEL: $MODELNAME$
FILE NAME: $FILEL$

USER NAME = $USER$	DESIGNED - _____	REVISED - _____
	DRAWN - _____	REVISED - _____
PLOT SCALE = $SCALE$	CHECKED - _____	REVISED - _____
PLOT DATE = $DATE$	DATE - _____	REVISED - _____

STATE OF ILLINOIS
DEPARTMENT OF TRANSPORTATION

IL 149 CROSS SECTIONS

SCALE: _____ SHEET __ OF __ SHEETS STA. _____

F.A.P. RTE.	SECTION	COUNTY	TOTAL SHEETS	SHEET NO.
873	(28-5)K-1	FRANKLIN	162	153

CONTRACT NO. 78814

ILLINOIS | FED. AID PROJECT

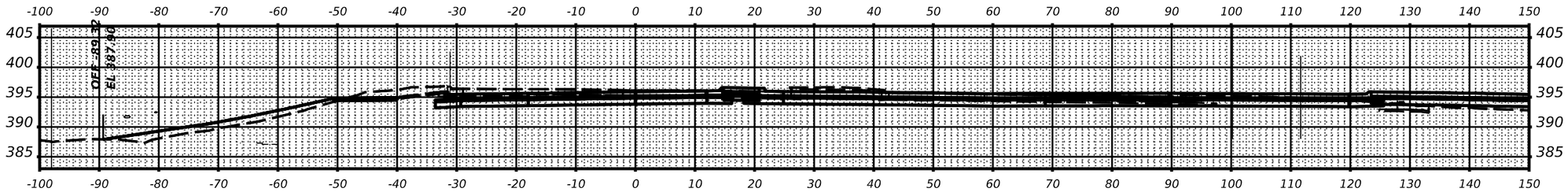

STA 1613+75.00

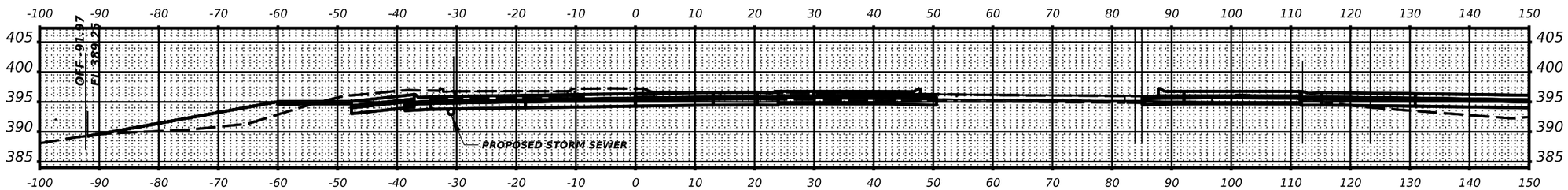

STA 1613+50.00

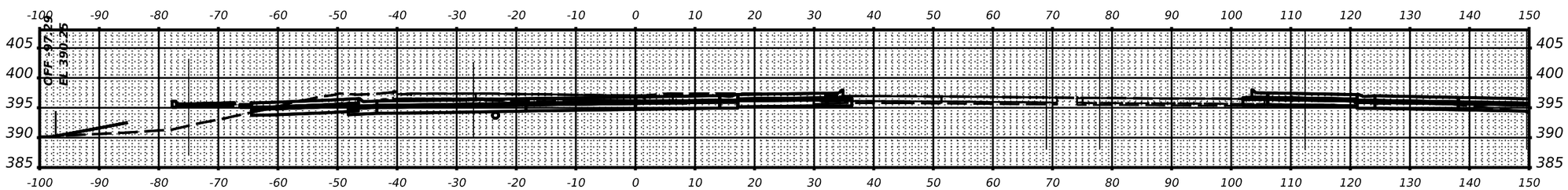

STA 1613+25.00

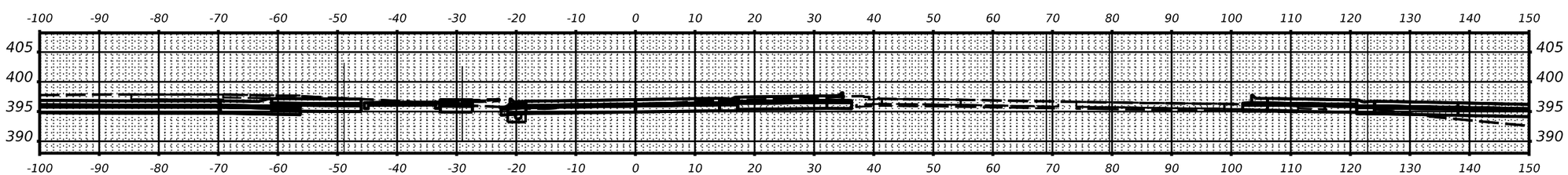

STA 1613+00.00

USER NAME = $USER$	DESIGNED - _____	REVISED - _____	STATE OF ILLINOIS DEPARTMENT OF TRANSPORTATION
	DRAWN - _____	REVISED - _____	
PLOT SCALE = $SCALE$	CHECKED - _____	REVISED - _____	
PLOT DATE = $DATE$	DATE - _____	REVISED - _____	

IL 149 CROSS SECTIONS

SCALE: _____ SHEET __ OF __ SHEETS STA. _____

F.A.P. RTE.	SECTION	COUNTY	TOTAL SHEETS	SHEET NO.
873	(28-5)K-1	FRANKLIN	162	154

CONTRACT NO. 78814

ILLINOIS | FED. AID PROJECT

FINAL SURVEY					
NOTE BOOK NO.	SURVEYED	PLOTTED	TEMPLATE	AREAS	AREAS CHECKED

DATE	BY	

ORIGINAL SURVEY					
NOTE BOOK NO.	SURVEYED	PLOTTED	TEMPLATE	AREAS	AREAS CHECKED

DATE	BY	

MODEL: $MODELNAME$
FILE NAME: $FILE1$

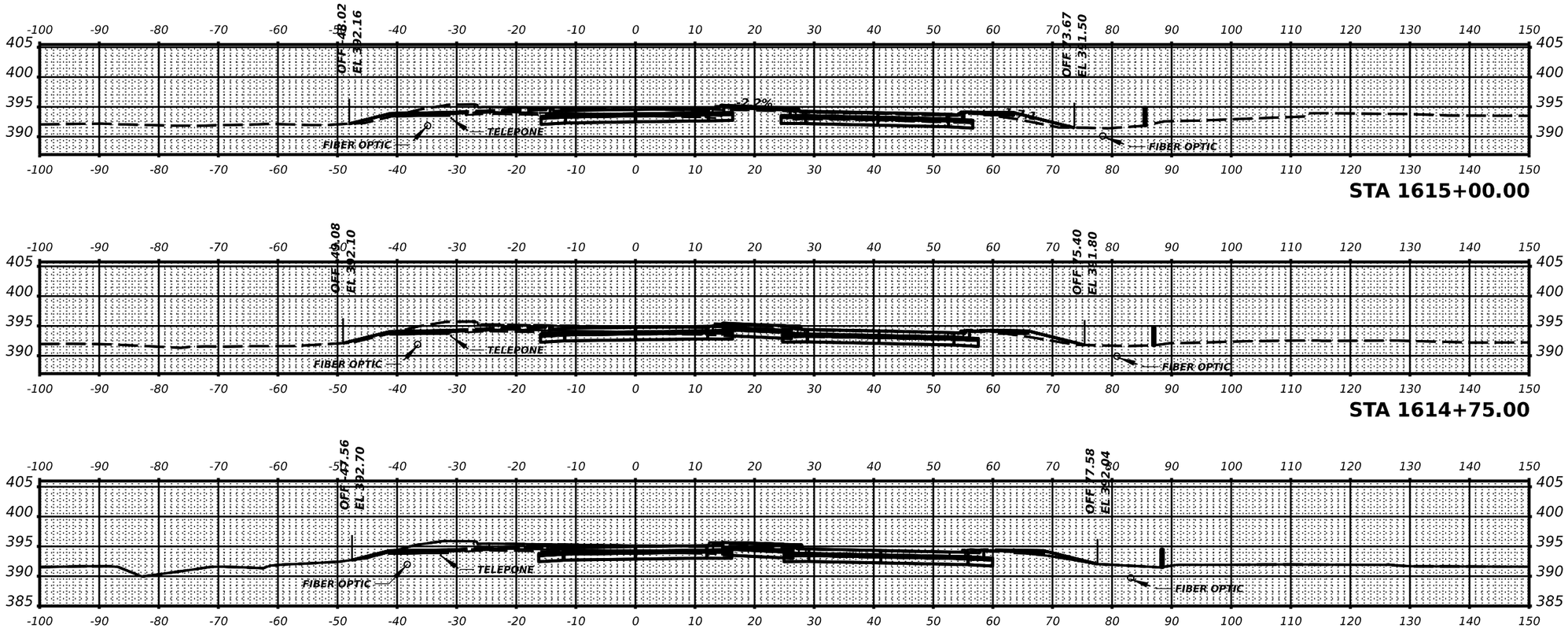

STA 1615+00.00

STA 1614+75.00

STA 1614+50.00

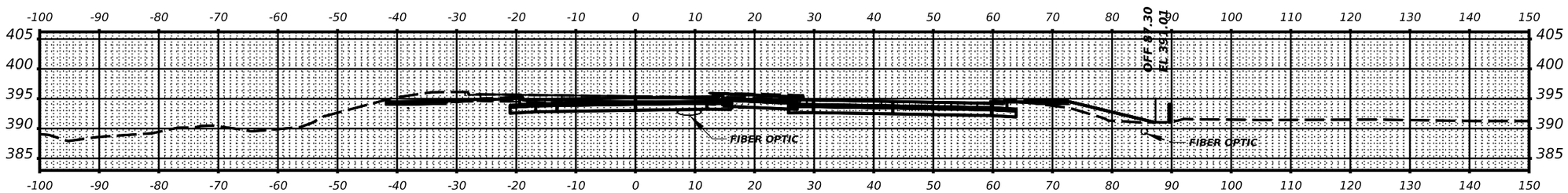

STA 1614+25.00

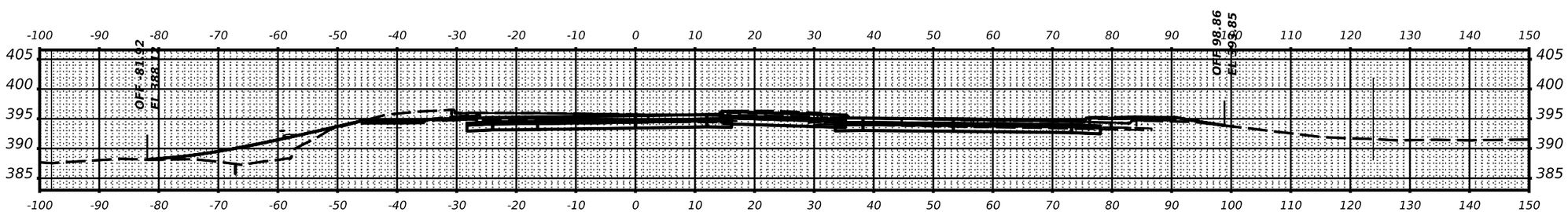

STA 1614+00.00

FINAL SURVEY	DATE	BY
SURVEYED		
PLOTTED		
TEMPLATE		
AREAS		
AREAS CHECKED		
NOTE BOOK NO.		

ORIGINAL SURVEY	DATE	BY
SURVEYED		
PLOTTED		
TEMPLATE		
AREAS		
AREAS CHECKED		
NOTE BOOK NO.		

MODEL: $MODELNAME$
FILE NAME: $FILEL$

USER NAME = $USER$	DESIGNED - _____	REVISED - _____
	DRAWN - _____	REVISED - _____
PLOT SCALE = $SCALE$	CHECKED - _____	REVISED - _____
PLOT DATE = $DATE$	DATE - _____	REVISED - _____

STATE OF ILLINOIS
DEPARTMENT OF TRANSPORTATION

IL 149 CROSS SECTIONS

SCALE: _____ | SHEET __ OF __ SHEETS | STA. _____

F.A.P. RTE.	SECTION	COUNTY	TOTAL SHEETS	SHEET NO.
873	(28-5)K-1	FRANKLIN	162	155

CONTRACT NO. 78814

ILLINOIS | FED. AID PROJECT

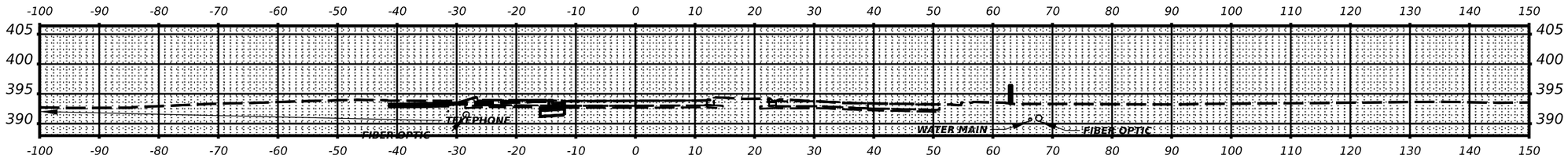

STA 1616+05.71

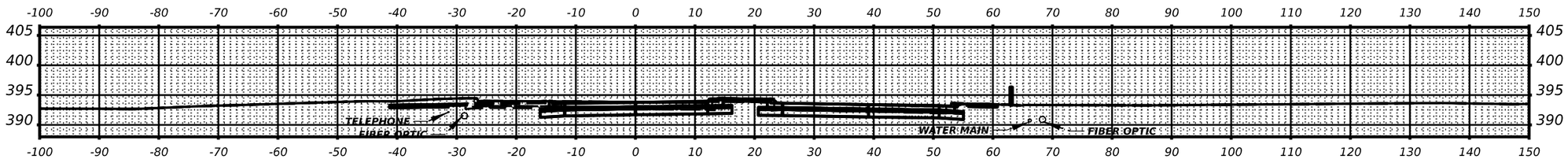

STA 1616+00.00

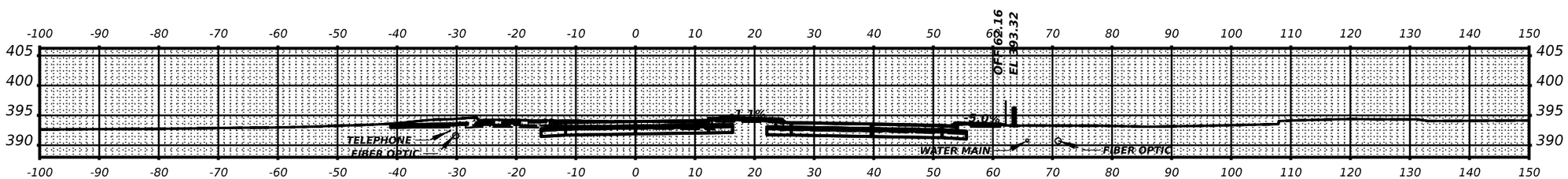

STA 1615+75.00

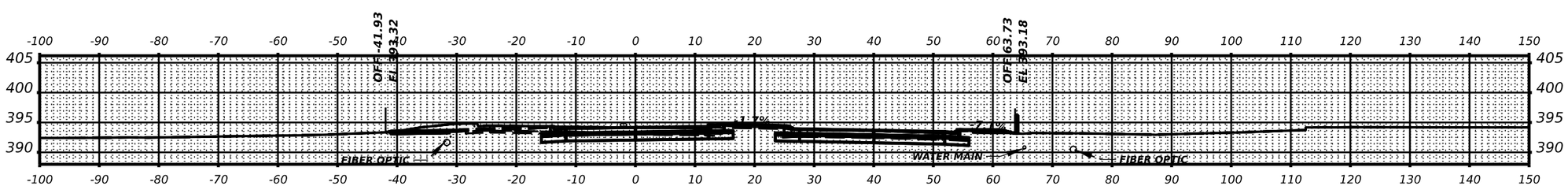

STA 1615+50.00

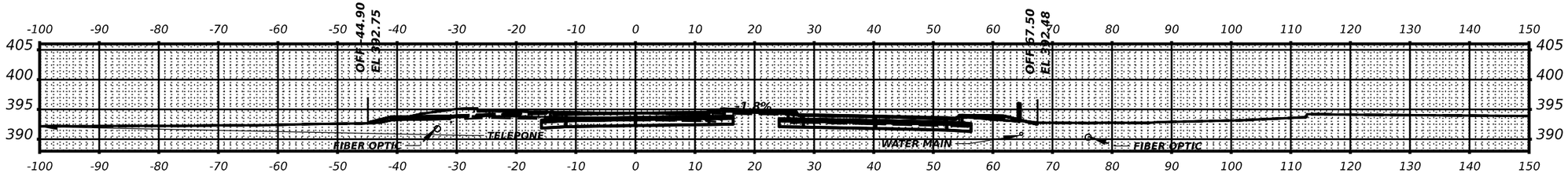

STA 1615+25.00

FINAL SURVEY	
NOTE BOOK NO.	SURVEYED ____ PLOTTED ____ TEMPLATE ____ AREAS ____ AREAS CHECKED ____
BY	
DATE	

ORIGINAL SURVEY	
NOTE BOOK NO.	SURVEYED ____ PLOTTED ____ TEMPLATE ____ AREAS ____ AREAS CHECKED ____
BY	
DATE	

MODEL: $MODELNAME$
FILE NAME: $FILEL$

USER NAME = $USER$	DESIGNED - _____	REVISED - _____
	DRAWN - _____	REVISED - _____
PLOT SCALE = $SCALE$	CHECKED - _____	REVISED - _____
PLOT DATE = $DATE$	DATE - _____	REVISED - _____

STATE OF ILLINOIS
DEPARTMENT OF TRANSPORTATION

IL 149 CROSS SECTIONS

SCALE: _____ | SHEET __ OF __ SHEETS | STA. _____

F.A.P. RTE.	SECTION	COUNTY	TOTAL SHEETS	SHEET NO.
873	(28-5)K-1	FRANKLIN	162	156
		CONTRACT NO. 78814		
		ILLINOIS	FED. AID PROJECT	

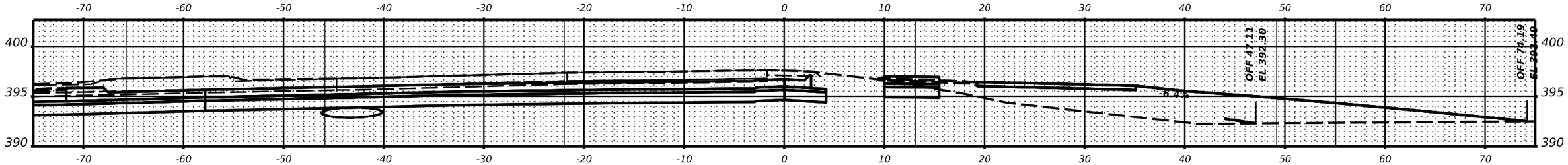

STA 2001+25.99

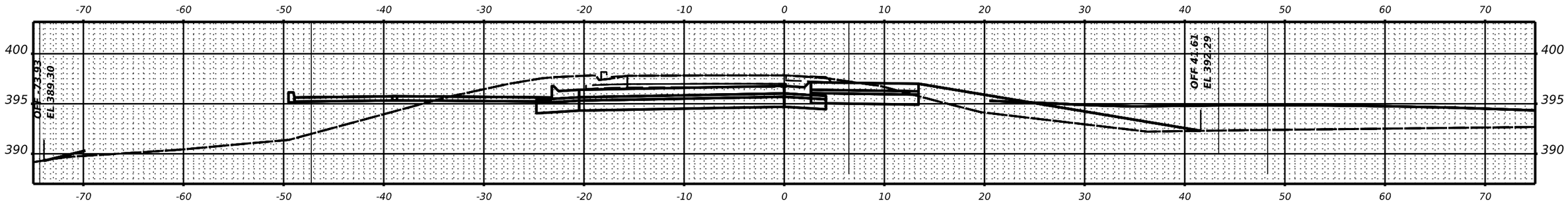

STA 2001+00.00

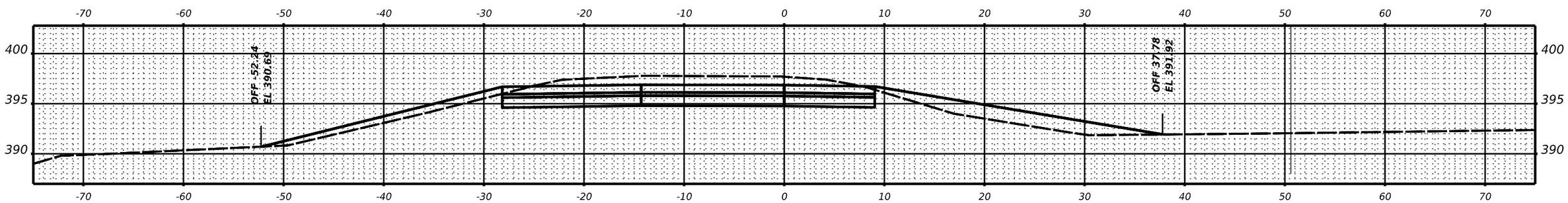

STA 2000+50.00

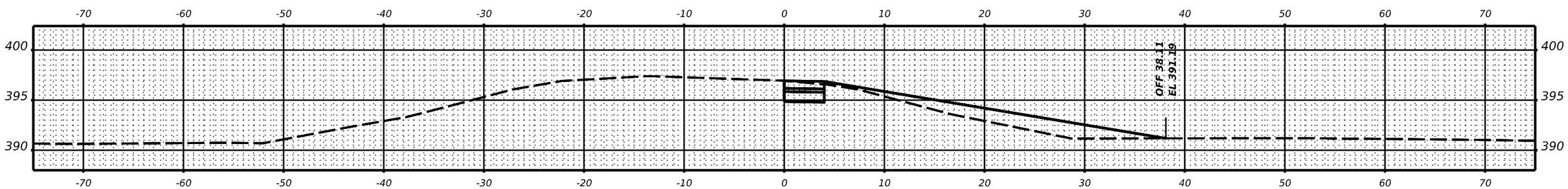

STA 2000+00.00

FINAL SURVEY	BY	DATE
SURVEYED		
PLOTTED		
TEMPLATE		
AREAS		
AREAS CHECKED		
NOTE BOOK		
NO.		

ORIGINAL SURVEY	BY	DATE
SURVEYED		
PLOTTED		
TEMPLATE		
AREAS		
AREAS CHECKED		
NOTE BOOK		
NO.		

MODEL: $MODELNAME$
FILE NAME: $FILEL$

USER NAME = $USER$	DESIGNED -	REVISED -
	DRAWN -	REVISED -
PLOT SCALE = $SCALE$	CHECKED -	REVISED -
PLOT DATE = $DATE$	DATE -	REVISED -

STATE OF ILLINOIS
DEPARTMENT OF TRANSPORTATION

RAMP A CROSS SECTIONS

SCALE: SHEET OF SHEETS STA.

F.A.P. RTE.	SECTION	COUNTY	TOTAL SHEETS	SHEET NO.
873	(28-5)K-1)	FRANKLIN	162	157
		CONTRACT NO. 78814		
		ILLINOIS	FED. AID PROJECT	

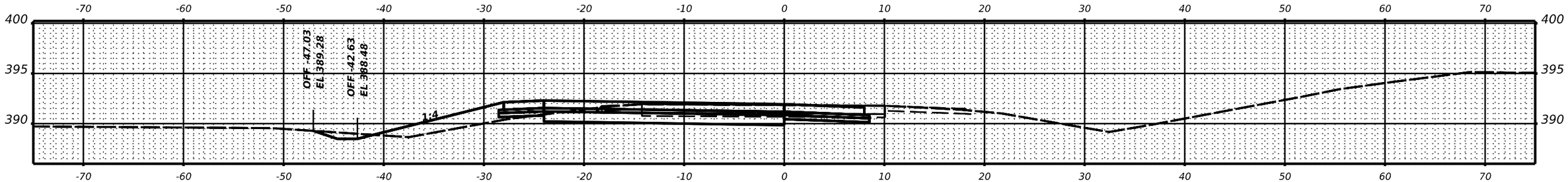

STA 2201+50.00

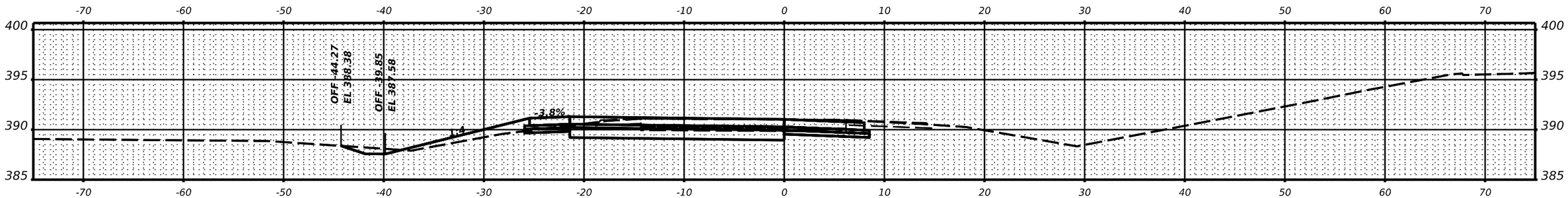

STA 2201+00.00

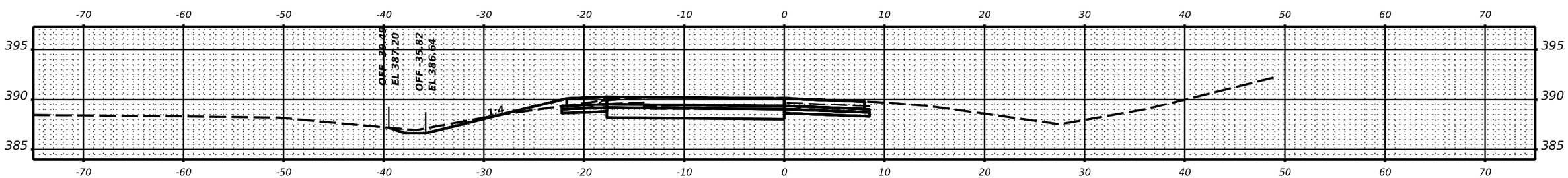

STA 2200+50.00

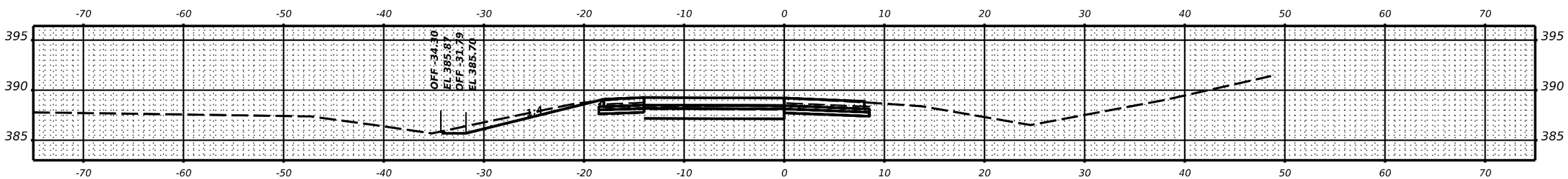

STA 2200+00.00

USER NAME = $USER$	DESIGNED -	REVISED -
	DRAWN -	REVISED -
PLOT SCALE = $SCALE$	CHECKED -	REVISED -
PLOT DATE = $DATE$	DATE -	REVISED -

STATE OF ILLINOIS
DEPARTMENT OF TRANSPORTATION

RAMP B CROSS SECTIONS

SCALE: SHEET OF SHEETS STA.

F.A.P. RTE.	SECTION	COUNTY	TOTAL SHEETS	SHEET NO.
873	(28-5)K-1)	FRANKLIN	162	158

CONTRACT NO. 78814

ILLINOIS FED. AID PROJECT

FINAL SURVEY: SURVEYED, PLOTTED, TEMPLATE, AREAS, AREAS CHECKED, NOTE BOOK, NO., BY, DATE

ORIGINAL SURVEY: SURVEYED, PLOTTED, TEMPLATE, AREAS, AREAS CHECKED, NOTE BOOK, NO., BY, DATE

MODEL: $MODELNAME$
FILE NAME: $FILE$

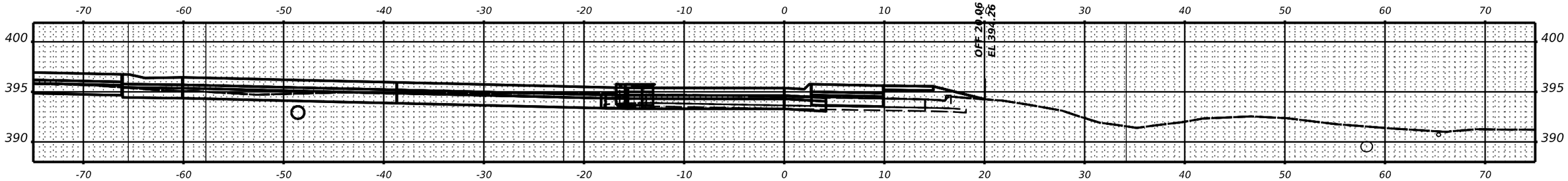

STA 2203+40.00

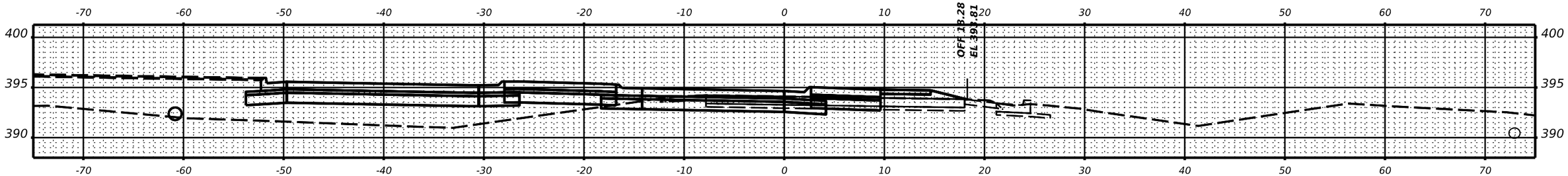

STA 2203+00.00

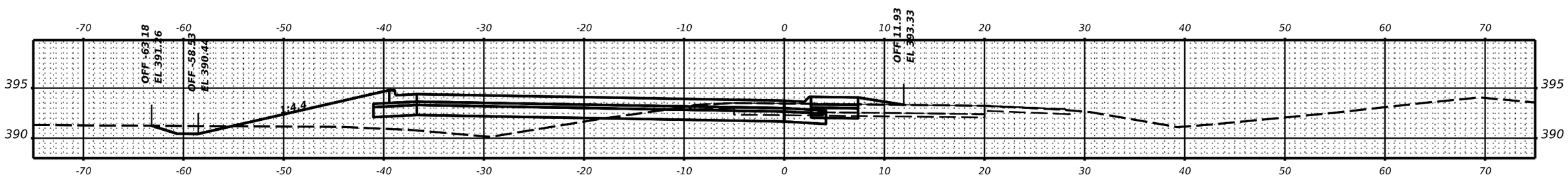

STA 2202+50.00

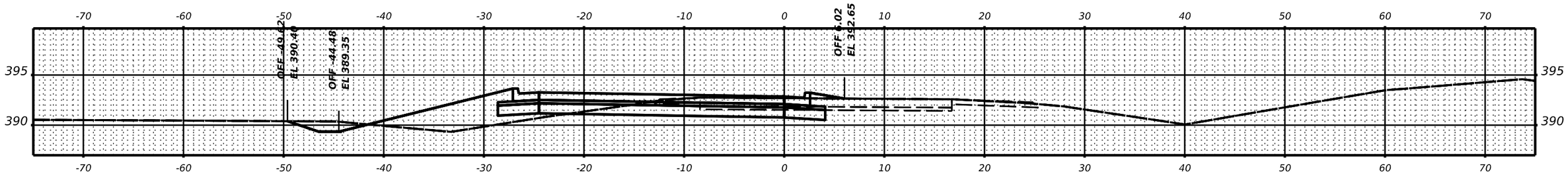

STA 2202+00.00

USER NAME = $USER$	DESIGNED -	REVISED -	STATE OF ILLINOIS DEPARTMENT OF TRANSPORTATION
	DRAWN -	REVISED -	
PLOT SCALE = $SCALE$	CHECKED -	REVISED -	
PLOT DATE = $DATE$	DATE -	REVISED -	

RAMP B CROSS SECTIONS

SCALE: | SHEET OF SHEETS | STA.

F.A.P. RTE.	SECTION	COUNTY	TOTAL SHEETS	SHEET NO.
873	(28-5)K-1)	FRANKLIN	162	159

CONTRACT NO. 78814

ILLINOIS | FED. AID PROJECT

FINAL SURVEY		BY	DATE
NOTE BOOK NO.	SURVEYED / PLOTTED / TEMPLATE / AREAS / AREAS CHECKED		

ORIGINAL SURVEY		BY	DATE
NOTE BOOK NO.	SURVEYED / PLOTTED / TEMPLATE / AREAS / AREAS CHECKED		

MODEL: $MODELNAME$
FILE NAME: $FILEL$

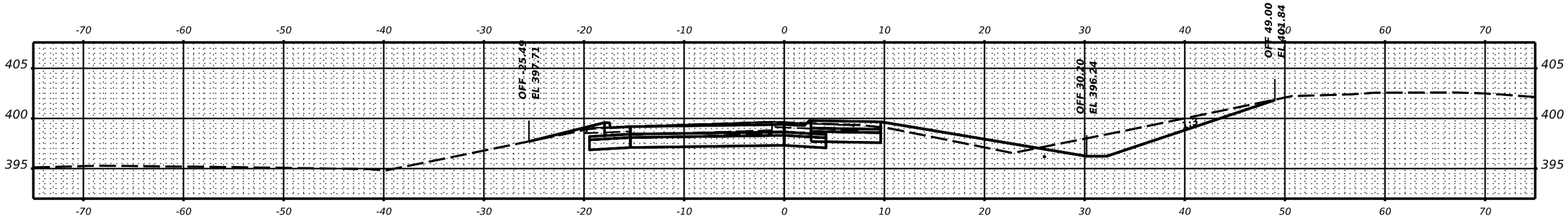

STA 1105+50.00

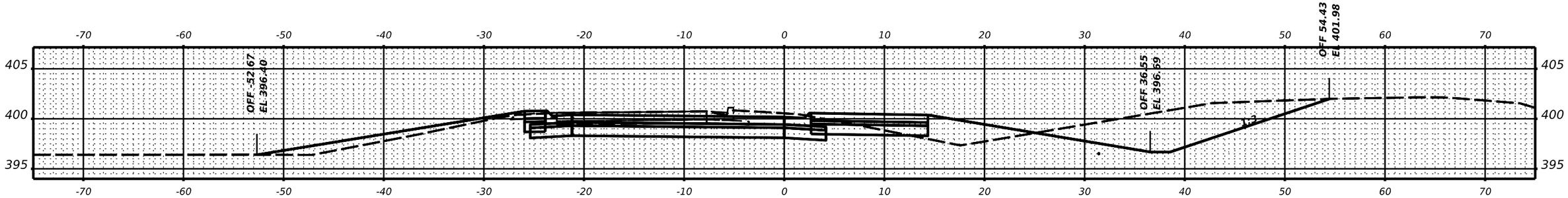

STA 1105+00.00

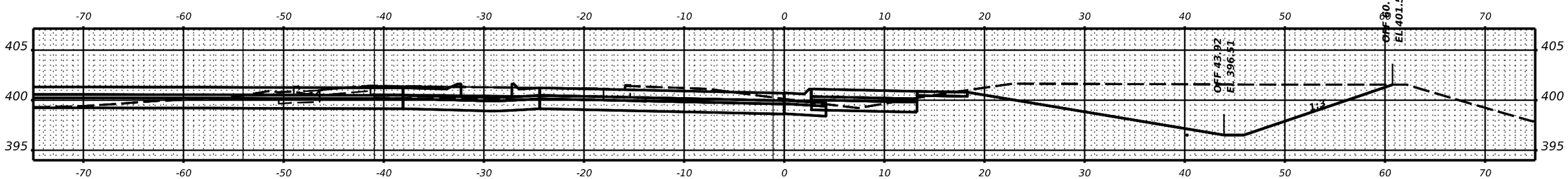

STA 1104+50.00

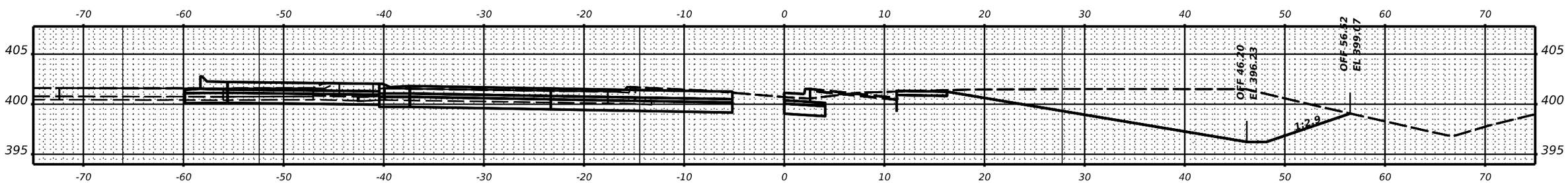

STA 1104+09.50

USER NAME = $USER$	DESIGNED -	REVISED -	STATE OF ILLINOIS DEPARTMENT OF TRANSPORTATION
	DRAWN -	REVISED -	
PLOT SCALE = $SCALE$	CHECKED -	REVISED -	
PLOT DATE = $DATE$	DATE -	REVISED -	

RAMP C CROSS SECTIONS

SCALE: SHEET OF SHEETS STA.

F.A.P. RTE.	SECTION	COUNTY	TOTAL SHEETS	SHEET NO.
873	(28-5)K-1)	FRANKLIN	162	160
		CONTRACT NO. 78814		
	ILLINOIS	FED. AID PROJECT		

FINAL SURVEY: NOTE BOOK NO.___ SURVEYED ___ PLOTTED ___ TEMPLATE ___ AREAS ___ AREAS CHECKED ___ BY ___ DATE ___

ORIGINAL SURVEY: NOTE BOOK NO.___ SURVEYED ___ PLOTTED ___ TEMPLATE ___ AREAS ___ AREAS CHECKED ___ BY ___ DATE ___

MODEL: $MODELNAME$
FILE NAME: $FILE$

FINAL SURVEY		BY	DATE
	SURVEYED		
	PLOTTED		
NOTE BOOK	TEMPLATE		
	AREAS		
NO.	AREAS CHECKED		

ORIGINAL SURVEY		BY	DATE
	SURVEYED		
	PLOTTED		
NOTE BOOK	TEMPLATE		
	AREAS		
NO.	AREAS CHECKED		

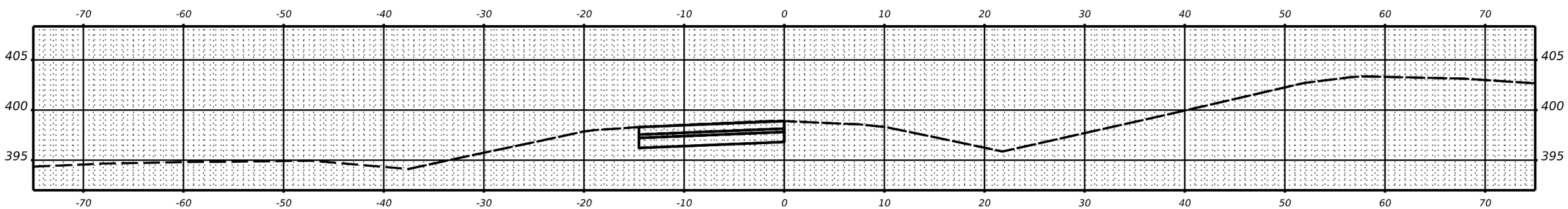

STA 1105+79.53

MODEL: $MODELNAME$
FILE NAME: $FILE$

USER NAME = $USER$	DESIGNED -	REVISED -
	DRAWN -	REVISED -
PLOT SCALE = $SCALE$	CHECKED -	REVISED -
PLOT DATE = $DATE$	DATE -	REVISED -

STATE OF ILLINOIS
DEPARTMENT OF TRANSPORTATION

RAMP C CROSS SECTIONS

SCALE: | SHEET OF SHEETS | STA.

F.A.P. RTE.	SECTION	COUNTY	TOTAL SHEETS	SHEET NO.
873	(28-5)K-1)	FRANKLIN	162	161
		CONTRACT NO. 78814		
	ILLINOIS	FED. AID PROJECT		

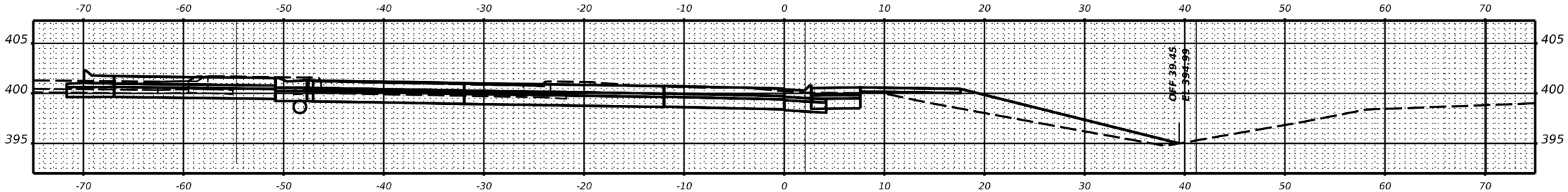

STA 1001+41.43

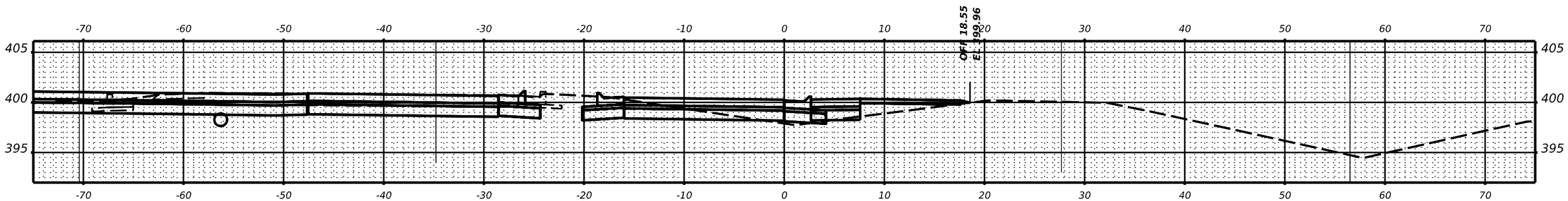

STA 1001+00.00

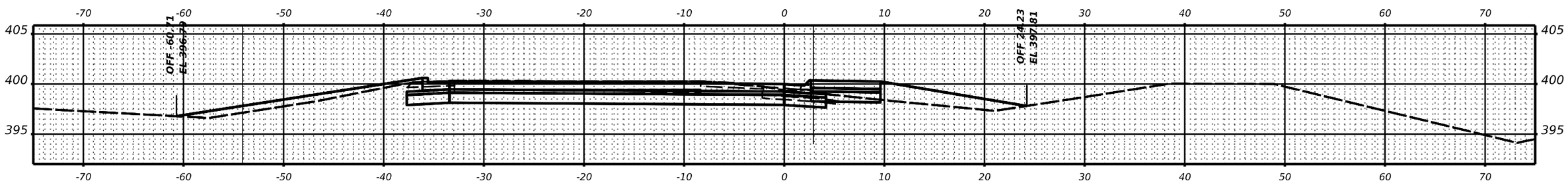

STA 1000+50.00

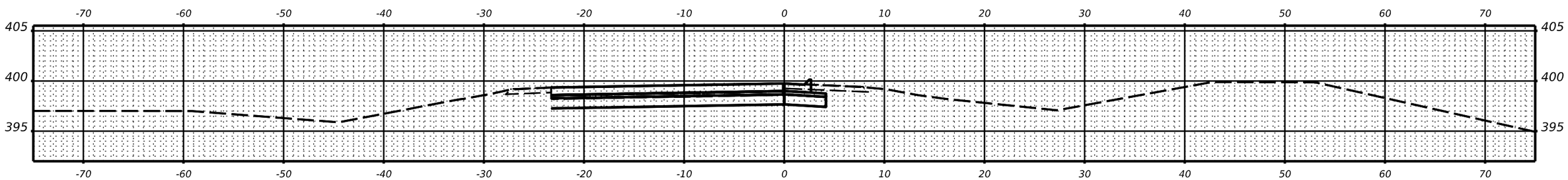

STA 1000+00.00

FINAL SURVEY	DATE	BY
SURVEYED		
PLOTTED		
TEMPLATE		
AREAS		
AREAS CHECKED		
NOTE BOOK NO.		

ORIGINAL SURVEY	DATE	BY
SURVEYED		
PLOTTED		
TEMPLATE		
AREAS		
AREAS CHECKED		
NOTE BOOK NO.		

MODEL: $MODELNAME$
FILE NAME: $FILEL$

USER NAME = $USER$	DESIGNED -	REVISED -
	DRAWN -	REVISED -
PLOT SCALE = $SCALE$	CHECKED -	REVISED -
PLOT DATE = $DATE$	DATE -	REVISED -

STATE OF ILLINOIS
DEPARTMENT OF TRANSPORTATION

RAMP D CROSS SECTIONS

SCALE: | SHEET OF SHEETS | STA.

F.A.P. RTE.	SECTION	COUNTY	TOTAL SHEETS	SHEET NO.
873	(28-5)K-1)	FRANKLIN	162	162

CONTRACT NO. 78814

ILLINOIS | FED. AID PROJECT