11-17-2023 LETTING ITEM 057

F.A.* RTE	SECTION	COUNTY	TOTAL SHEETS	SHEET NO.
*	**	MCLEAN	26	1
	ILLINOIS	CONTRACT NO. 70G12		

* FAI-55 & FAP 704
** D5 BRIDGE PAINTING 2024-1

D-95-040-21

STATE OF ILLINOIS
DEPARTMENT OF TRANSPORTATION

PROPOSED HIGHWAY PLANS

ROUTES FAI–55 & FAP 704 (I–55 & I–55 BUSN)
SECTION D5 BRIDGE PAINTING 2024–1
PROJECT NHPP – T1DQ(777)
BRIDGE PAINTING
MCLEAN COUNTY

C–95–050–22

I–55: OVER WHITE OAK RD & NS RR 3.8 MI SW OF US 51
I–55 BUSN LOOP OVER NS RAIL CORP. 0.5 MI E OF US 51

FOR LOCATION MAP, SEE SHEET 3

FOR INDEX OF SHEETS, SEE SHEET NO. 2
FOR SUMMARY OF QUANTITIES, SEE SHEET NO. 4–5

LOCATION OF SECTION INDICATED THUS:–

CURRENT TRAFFIC DATA

LOC. #1	LOC. #2	LOC. #3
I-55 = 19,800	I-55 = 22,700	I-55 Busn Loop = 23300
White Oak Rd = 4,250	White Oak Rd = 4,250	
(2023)	(2023)	(2023)

LOC. #1 S.N. 057-0018 - FAI 55 NB @ m.p. 161.0 over White Oak Road & NSRR
LOC. #2 S.N. 057-0019 - FAI 55 SB @ m.p. 161.0 over White Oak Road & NSRR
LOC. #3 S.N. 057-0064 - I-55 Busn Loop over NSRR - 0.49 mi. East of U.S. 51

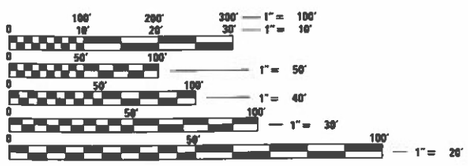

FULL SIZE PLANS HAVE BEEN PREPARED USING STANDARD ENGINEERING SCALES. REDUCED SIZED PLANS WILL NOT CONFORM TO STANDARD SCALES. IN MAKING MEASUREMENTS ON REDUCED PLANS, THE ABOVE SCALES MAY BE USED.

J.U.L.I.E.
JOINT UTILITY LOCATION INFORMATION FOR EXCAVATORS
1–800–892–0123
OR 811

STATE OF ILLINOIS
DEPARTMENT OF TRANSPORTATION

SUBMITTED 8/9 2023
Kenneth A. Hornett SWN
REGIONAL ENGINEER

October 13, 2023
ENGINEER OF DESIGN AND ENVIRONMENT

October 13, 2023
DIRECTOR OF HIGHWAYS PROJECT IMPLEMENTATION

PROJECT ENGINEER: JASON STULTS
SQUAD LEADER: GREG EAGLIN
DESIGNER: JASON LEE
PHONE NUMBER: (217)465–4181

CONTRACT NO. 70G12

PRINTED BY THE AUTHORITY OF THE STATE OF ILLINOIS

INDEX OF SHEETS

HIGHWAY STANDARDS

STANDARD NO.	DESCRIPTION
000001-08	STANDARD SYMBOLS, ABBREVIATIONS AND PATTERNS
701001-02	OFF-ROAD OPERATIONS, 2L, 2W, MORE THAN 15' (4.5 m) AWAY
701006-05	OFF-ROAD OPERATIONS, 2L, 2W, 15' (4.5 m) TO 24" (600 mm) FROM PAVEMENT EDGE
701101-05	OFF-ROAD OPERATIONS, MULTILANE, 15' (4.5 m) TO 24" (600 mm) FROM PAVEMENT EDGE
701106-02	OFF-ROAD OPERATIONS, MULTILANE, MORE THAN 15' (4.5 m) AWAY
701321-18	LANE CLOSURE, 2L, 2W, BRIDGE REPAIR WITH BARRIER
701400-11	APPROACH TO LANE CLOSURE, FREEWAY / EXPRESSWAY
701402-12	LANE CLOSURE, FREEWAY/EXPRESSWAY, WITH BARRIER
701423-10	LANE CLOSURE, MULTILANE, WITH BARRIER, FOR SPEEDS ≥ 45 MPH TO 55 MPH
701428-01	TRAFFIC CONTROL SETUP AND REMOVAL FREEWAY / EXPRESSWAY
701901-08	TRAFFIC CONTROL DEVICES
704001-08	TEMPORARY CONCRETE BARRIER
782006-01	GUARDRAIL AND BARRIER WALL REFLECTOR MOUNTING DETAILS

GENERAL NOTES

G.N.-100A
ELECTRONIC FILES AND/OR ELECTRONIC SURVEY INFORMATION INCLUDING CADD FILES WILL NOT BE AVAILABLE TO THE CONTRACTOR.

G.N.-107.12
THE NAME, ADDRESS AND TELEPHONE NUMBER OF THE LOCAL RAILROAD CONTACT IS:

Mr. Keith Zerbe
Track Supervisor
Norfolk Southern Railway Company
2100 West College Avenue
Normal IL. 61761
(616) 260-5775

SPECIAL ATTENTION IS CALLED TO ARTICLE 107.12 REGARDING RAILROAD FLAGGERS. THE NAME, ADDRESS AND TELEPHONE NUMBER OF THE RAILROAD CONTACT PERSON FOR FLAGGERS IS: (SEE NOTE ABOVE)

FLAGGING WILL BE ASSIGNED BY NORFOLK SOUTHERN ONCE THEIR RIGHT OF ENTRY AND INSURANCE REQUIREMENTS HAVE BEEN MET.

SOME RAILROADS REQUIRE CONTRACTORS TO OBTAIN A RIGHT OF ENTRY PERMIT BEORE ENTERING UPON RAILROAD RIGHT OF WAY. IT IS THE RESPONSIBILITY OF THE CONTRACTOR TO OBTAIN A RAILROAD RIGHT OF ENTRY PERMIT FROM THE RAILROAD IF REQUIRED BY THE RAILROAD.

G.N.-107.12A (SPECIAL)
ALL WORK TO BE PREFORMED ON, OVER, UNDER, OR ADJACENT TO THE RAILROAD RIGHT OF WAY SHALL COMPLY WITH THE NORFOLK SOUTHERN RAILWAY COMPANY ("RAILROAD", "NSR" OR "NS") PUBLIC PROJECTS MANUAL (APPENDIX E, SPECIAL PROVISIONS FOR THE PROTECTION OF RAILWAY INTERESTS, AND APPENDIX H1, OVERHEAD GRADE SEPARATION DESIGN CRITERIA). WHEN IN CONFLICT WITH OTHER SPECIFICATIONS, THE MOST STRINGENT ONE SHALL APPLY.

ADDITIONALLY, THE MINIMUM TEMPORAY CLEARANCES OF 22'-0" VERTICALLY ABOVE TOP OF HIGHEST RAIL AND 13'-0" HORIZONTALLY FROM CENTERLINE OF TANGENT TRACK (OR 14'-0" HORIZONTALLY FROM CENTERLINE OF CURVED TRACK) SHALL BE MAINTAINED AT ALL TIMES. MINIMUM CLEARANCES FOR CONTAINMENT SYSTEM, OPERATIONS AND REMOVAL SHALL NOT BE LESS THAN 22'-0" ABOVE TOP OF RAIL OF NORFOLK SOUTHERN TRACKS AND 13'-0" FROM CENTERLINE OF TRACK MEASURED AT A RIGHT ANGLE.

ALL PROPOSED TEMPORARY CLEARANCES WHICH ARE LESS THAN THOSE LISTED ABOVE MUST BE SUBMITTED TO THE RAILROAD ENGINEER FOR APPROVAL PRIOR TO CONSTRUCTION AND MUST ALSO BE AUTHORIZED BY THE REGULATORY BODY OF THE STATE IF LESS THAN THE LEGALLY PRESCRIBED CLEARANCES AS STATED IN ARTICLE 107.12 OF THE STANDARD SPECIFICATIONS

G.N.-107.12B (SPECIAL)
IT HAS BEEN ADVISED BY THE RAILROAD THAT TRACK AND GROUND PROTECTION SHALL BE PROVIDED TO PROTECT THE BALLAST FROM CONTAMINATION AND THAT IT WOULD BE THE RESPONSIBILITY OF THE CONTRACTOR FOR ANY RESTORATION IF DEEMED NECESSARY BY THE RAILROAD. ALSO, THE CONTRACTOR SHALL PROVIDE THEIR INTENT FOR PROTECTION TO THE RAILROAD AND MAY DISCUSS ANY QUESTIONS AT THE CONTACT INFORMATION SHOWN.

G.N.-107.12C (SPECIAL)
FOR PROJECTS REQUIRING MORE THAN 30 CONSECUTIVE DAYS OF FLAGGING, THE CONTRACTOR SHALL PROVIDE THE FLAGMAN A SMALL WORK AREA WITH A DESK / COUNTER AND CHAIR WITHIN THE FIELD / SITE TRAILER, INCLUDING THE USE OF BATHROOM FACILITIES, WHERE THE FLAGMAN CAN CHECK IN / OUT WITH THE PROJECT, AS WELL AS TO THE FLAGMAN'S HOME TERMINAL. THE WORK AREA SHOULD PROVIDE ACCESS TO TWO (2) ELECTRICAL OUTLETS FOR RECHARGING RADIO(S), AND A LAPTOP COMPUTER, AND HAVE THE ABILITY TO PRINT OFF NEEDED DOCUMENTATION AND ORDERS AS NEEDED AT THE FILED / SITE TRAILER. THIS SHOULD AID IN MAXIMIZING THE FLAGMAN'S TIME AND EFFICIENCY ON THE PROJECT.

THE COST OF CONFORMING TO THE ADDITIONAL RAILROAD REQUIREMENTS AS STATED IN G.N.-107.12A (SPECIAL), G.N.-107.12B (SPECIAL) AND G.N.-107.12C (SPECIAL) SHALL BE CONSIDERED AS INCLUDED IN THE CONTRACT UNIT PRICE BID FOR THE VARIOUS ITEMS OF WORK INVOLVED, AND NO ADDITIONAL COMPENSATION WILL BE ALLOWED.

G.N.-501A
THE EXISTING STRUCTURAL STEEL COATING CONTAINS LEAD. THE CONTRACTOR SHALL FOLLOW THE GUIDE BRIDGE SPECIAL PROVISIONS FOR "CONTAINMENT AND DISPOSAL OF LEAD PAINT CLEANING RESIDUES" TO DEAL WITH THE PRESENCE OF LEAD ON THIS PROJECT.

G.N.-506 (SPL.)
ALL FINAL SURFACES OF THE BEAMS SHALL BE PAINTED GRAY (MUNSELL COLOR STANDARD - 5B 7/1) EXCEPT THE EXTERIOR SURFACES OF THE EXTERIOR BEAMS WHICH SHALL BE PAINTED WITH EITHER INTERSTATE GREEN (MUNSELL COLOR STANDARD 7.5G 4/8) OR REDDISH BROWN (MUNSELL COLOR STANDARD 2.5YR 3/4) AS SPECIFIED UNDER THE DESCRIPTION FOR EACH STRUCTURE.

ONLY STRUCTURAL STEEL AND OTHER DESIGNATED SURFACES SHALL BE PAINTED. ALL OTHER SURFACES SHALL BE PROTECTED FROM CONTRACTORS BLASTING AND PAINTING OPERATIONS. ANY AREAS DAMAGED BY BLASTING OR OVERSPRAY WILL BE REMOVED OR REPAIRED AT THE CONTRACTOR'S EXPENSE AND NO ADDITIONAL COMPENSATION WILL BE ALLOWED.

CARE SHALL BE TAKEN NOT TO DAMAGE RUBBER BEARING OR JOINT COMPONENTS DURING BLASTING AND CLEANING OPERATIONS. ANY DAMAGE TO THESE COMPONENTS SHALL BE REPAIRED AT CONTRACTORS EXPENSE.

THE SSPC-QP1 AND QP2 PAINTING CONTRACTOR CERTIFICATIONS WILL BE REQUIRED FOR THIS CONTRACT.

ALL TRASH AND PAINTING DEBRIS, EXCLUDING WASTE BARRELS OR ROLL-OFF DUMPSTERS, SHALL BE REMOVED BEFORE BEGINNING WORK AT ANOTHER LOCATION.

2 YEAR PAINT WARRANTY REQUIRED FOR ALL STRUCTURES

COMMITMENTS
THERE ARE NO COMMITMENTS ON THIS PROJECT

MCLEAN COUNTY

BLOOMINGTON NORMAL

N

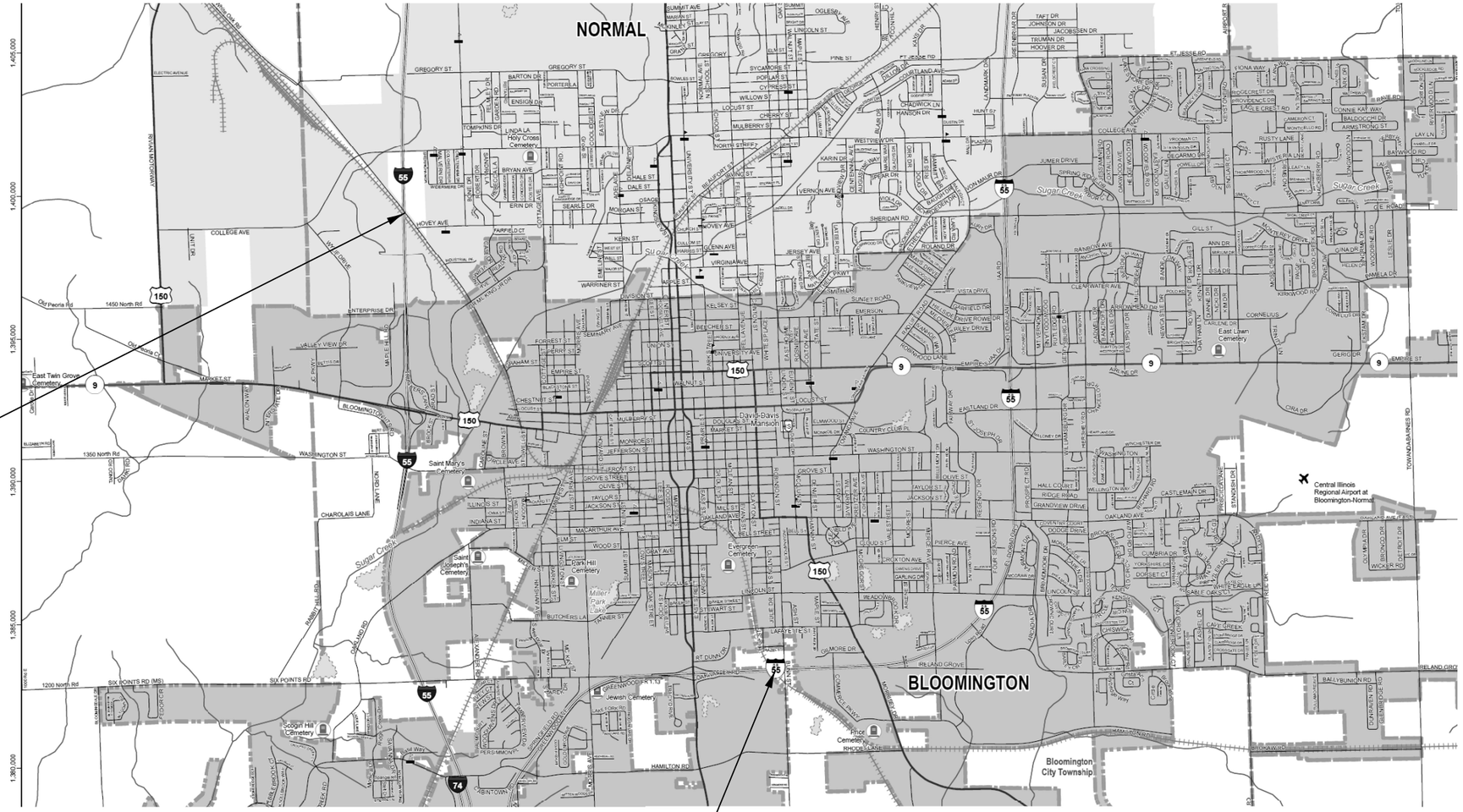

LOCATION 1 & 2
I-55 MILE MARKER 161.0
S.N. 057-0018 N.B.
S.N. 057-0019 S.B.
STA. 403+09.52

LOCATION #3
S.N. 057-0064
STA. 74+41.00

0 0.5 1 2 Miles

TOWNSHIPS
NORMAL
BLOOMINGTON

* FAI-55 & FAP 704

MODEL: $MODEL$NAME$
FILE NAME: pw:\\ildot-pw.bentley.com:PWIDOT\Documents\IDOT Offices\District 5\Projects\D570G12\CADData\CADSheets\D570G12-sht1-location_Map.dgn

USER NAME = Steven.Wood	DESIGNED -	REVISED -	
	DRAWN -	REVISED -	
PLOT SCALE = 40.0000 ' / in.	CHECKED -	REVISED -	
PLOT DATE = 8/9/2023	DATE -	REVISED -	

STATE OF ILLINOIS
DEPARTMENT OF TRANSPORTATION

STRUCTURE LOCATION MAP – MCLEAN CO.

SCALE: none | SHEET 1 OF 1 SHEETS | STA. TO STA.

F.A.* RTE.	SECTION	COUNTY	TOTAL SHEETS	SHEET NO.
*	**	MCLEAN	26	3
** D5 BRIDGE PAINTING 2024-1		CONTRACT NO. 70G12		
		ILLINOIS FED. AID PROJECT		

SUMMARY OF QUANTITIES

LOCATION OF WORK:	LOC. #1	LOC. #2	LOC. #3
	FAI 55 (1-55)	FAI 55 (1-55)	FAP 704 (1-55 Busn)
	S.N.057-0018	S.N.057-0019	S. N.057-0064
COUN1Y:	MCLEAN	MCLEAN	MCLEAN
	URBAN	URBAN	URBAN
FUNDING BREAKOUT:	90% FEDERAL	90% FEDERAL	80% FEDERAL
	10% STATE	10% STATE	20% STATE
CONSTRUCTION 1YPE CODE:	0047	0047	0047

	CODE NO.		ITEM	UNIT	TOTAL QUANTI1Y	QUANTI1Y	QUANTI1Y	QUANTI1Y
	67100100		MOBILIZATION	L SUM	1.0	0.3	0.3	0.4
	70100207		TRAFFIC CONTROL AND PROTECTION, STANDARD 701402	EACH	2.0	1.0	1.0	
	70100325		TRAFFIC CONTROL AND PROTECTION, STANDARD 701423	EACH	1.0			1.0
	70100405		TRAFFIC CONTROL AND PROTECTION, STANDARD 701321	EACH	1.0	0.5	0.5	
	70106500		TEMPORARY BRIDGE TRAFFIC SIGNALS	EACH	1.0	0.5	0.5	
	70107025		CHANGEABLE MESSAGE SIGN	CAL DA	35.0	14.0	14.0	7.0
	70400100		TEMPORARY CONCRETE BARRIER	FOOT	1525.0	612.5	612.5	300.0
	70400200		RELOCATE TEMPORARY CONCRETE BARRIER	FOOT	300.0	150.0	150.0	
	70600240		IMPACT ATTENUATORS, TEMPORARY (NON-REDIRECTIVE), TEST LEVEL 2	EACH	3.0	1.0	1.0	1.0
	70600250		IMPACT ATTENUATORS, TEMPORARY (NON-REDIRECTIVE), TEST LEVEL 3	EACH	2.0	1.0	1.0	
	70600340		IMPACT ATTENUATORS, RELOCATE (NON-REDIRECTIVE), TEST LEVEL 2	EACH	2.0	1.0	1.0	

SUMMARY OF QUANTITIES

LOCATION OF WORK:	LOC. #1	LOC. #2	LOC. #3
	FAI 55 (1-55)	FAI 55 (1-55)	FAP 704 (1-55 Busn)
	S.N.057-0018	S.N.057-0019	S.N.057-0064
COUNTY:	MCLEAN	MCLEAN	MCLEAN
	URBAN	URBAN	URBAN
FUNDING BREAKOUT:	90% FEDERAL	90% FEDERAL	80% FEDERAL
	10% STATE	10% STATE	20% STATE
CONSTRUCTION TYPE CODE:	0047	0047	0047

	CODE NO.		ITEM	UNIT	TOTAL QUANTITY	QUANTITY	QUANTITY	QUANTITY
	)(5060603		CONTAINMENT AND DISPOSAL OF NON-LEAD PAINT CLEANING RESIDUES NO. 3	L SUM	1.0			1.0
	)(5067501		BRIDGE CLEANING AND PAINTING WARRANTY NUMBER 1	L SUM	1.0	1.0		
	)(5067502		BRIDGE CLEANING AND PAINTING WARRANTY NUMBER 2	L SUM	1.0		1.0	
	)(5067503		BRIDGE CLEANING AND PAINTING WARRANTY NUMBER 3	L SUM	1.0			1.0
	X7200201		WIDTH RESTRICTION SIGNING	L SUM	1.0	0.4	0.4	0.2
	Z0007101		CONTAINMENT AND DISPOSAL OF LEAD PAINT CLEANING RESIDUES NO. 1	L SUM	1.0	1.0		
	Z0007102		CONTAINMENT AND DISPOSAL OF LEAD PAINT CLEANING RESIDUES NO. 2	L SUM	1.0		1.0	
	Z0010501		CLEANING AND PAINTING STEEL BRIDGE NO. 1	L SUM	1.0	1.0		
	Z0010502		CLEANING AND PAINTING STEEL BRIDGE NO. 2	L SUM	1.0		1.0	
	Z0010503		CLEANING AND PAINTING STEEL BRIDGE NO. 3	L SUM	1.0			1.0
	Z0048665		RAILROAD PROTECTIVE LIABILITY INSURANCE	L SUM	1.0	0.3	0.3	0.4
• DENOTES SPECIALTY ITEM								

* FAI-55 & FAP 704

TRAFFIC CONTROL SUMMARY

Location	Structure	Direction	70100405 TC&P Std. 701321 Each	70100325 TC&P Std. 701423 Each	70100207 TC&P Std. 701402 Each	no pay item TC&P Std. 701400 not measured for payment included with 701402	70400100 Temp Conc Barrier Foot	70400200 Relocate Temp Conc Barrier Foot	70600240 Impact Atten Test Level 2 Each	70600250 Impact Atten Test Level 3 Each	70600340 Relocate Imp Att, TL 2 Each	70107025 Changeable Message Sign Cal Day
# 1	057-0018	NB	0.5	-	1.0 **	on I-55 NB	312.5' under 0018 on White Oak	150' taper on White Oak	1.0	-	1.0	7 day advance notice on White Oaks Rd
							300' I-55 NB **	-	-	1.0 **	-	7 day advance notice I-55 NB **
# 2	057-0019	SB	0.5	-	1.0 **	on I-55 SB	312.5' under 0019 on White Oak	150' taper on White Oak	1.0	-	1.0	7 day advance notice on White Oaks Rd
							300' I-55 SB **	-	-	1.0 **	-	7 day advance notice I-55 SB **
# 3	057-0064		-	1.0 ***	-	-	300' ***	-	1.0 ***	-	-	7 day advance notice on I-55 Busn Loop SB/WB ***
		TOTALS	1.0	1.0	2.0		1525	300	3.0	2.0	2.0	35.0

** Contractor may or may not need these traffic control items. It is anticipated that the Contractor will paint 057-0018 & 0019 from existing ROW under the structures. TC&P Std 701321 will be used to paint Span 4 over White Oak Rd.
Additional traffic control items marked ** are included in this contract in the event the Contractor needs to paint Span 1 from above on I-55.

*** Contractor may or may not need these traffic control items. It is anticipated that the Contractor will paint 057-0064 from under the structure. Access is possible from the SW quadrant. The Contractor can find property owners to coordinate with using Mclean County GIS.
Additional traffic control items marked *** are included in this contract in the event the Contractor needs to paint Span 5 from above on I-55 Busn Loop.
If the Contractor elects to paint from above on I-55 Busn Loop, the Contractor shall close only the I-55 Busn Loop SB / WB driving lane to avoid conflicts with the US 51 Busn interchange.

LOCATION #1

DESCRIPTION: I-55 NB @ mp 161.0 over WHITE OAKS RD & NSRR
COUNTY: MCLEAN
ROUTE: I-55 NB
MARKED ROUTE: I-55 NB
SECTION: 57-6HVB
STRUCTURE NO.: 057-0018
TYPE OF STRUCTURE: 5 SPAN CONTINUOUS STEEL
11 BEAM LINES - BK-BK ABUTS = 450.72'

CLEANING AND PAINTING OF THE EXISTING STRUCTURAL STEEL SHALL BE AS SPECIFIED IN THE SPECIAL PROVISIONS FOR "CLEANING AND PAINTING EXISTING STEEL STRUCTURES." ALL BEAMS, BEARINGS AND OTHER STRUCTURAL STEEL SHALL BE CLEANED PER NEAR WHITE BLASTNG SSPC-SP10.

THE DESIGNATED AREAS CLEANED PER NEAR WHITE BLAST CLEANING SSPC-SP10 SHALL BE PAINTED ACCORDING TO THE REQUIREMENTS OF PAINT SYSTEM 1 OZ/E/U. THE COLOR OF THE FINAL FINISH COAT FOR ALL INTERIOR STEEL SURFACES SHALL BE GRAY, MUNSELL NO. 5B 7/1. THE COLOR OF THE FINAL FINISH COAT FOR ALL EXTERIOR AND BOTTOM FLANGE OF THE FASCIA BEAMS SHALL BE INTERSTATE GREEN (MUNSELL COLOR STANDARD 7.5G 4/8).

A MINIMUM OF THREE (3) HIGH VOLUME AIR MONITOR WILL BE REQUIRED TO MONITOR AIR QUALITY DURING DUST PRODUCING OPERATIONS AT THIS SITE. SEE SPECIAL PROVISIONS FOR "CONTAINMENT AND DISPOSAL OF LEAD PAINT CLEANING RESIDUES".

THE EXISTING STRUCTURAL STEEL COATING CONTAINS LEAD. THE CONTRACTOR SHALL FOLLOW THE GUIDE BRIDGE SPECIAL PROVISIONS FOR "CONTAINMENT AND DISPOSAL OF LEAD PAINT CLEANING RESIDUES" TO DEAL WITH THE PRESENCE OF LEAD ON THIS PROJECT.

TWO (2) YEAR PAINT WARRANTY REQUIRED FOR THIS STRUCTURE

NOTE: DECK DRAINS WITHIN THE PAINTING LIMITS DESCRIBED ABOVE ARE TO BE PAINTED AT NO ADDITIONAL COST.

NOTE: ELASTOMERIC BEARINGS AT ABUTMENTS and PIERS 1, 2, and 4

TRAFFIC CONTROL AND PROTECTION

IT IS ANTICIPATED THAT THE CONTRACTOR WILL PAINT LOCATIONS #1 & #2 FROM EXISITING ROW UNDER THE STRUCTURES. TC&P STANDARD 701321 WILL BE USED TO PAINT SPAN 4 OVER WHITE OAKS ROAD. TC&P 701402 IS INCLUDED IN THIS CONTRACT IN THE EVENT THE CONTRACTOR NEEDS TO PAINT SPAN 1 FROM ABOVE ON I-55.

LOCATION #2

DESCRIPTION: I-55 NB @ mp 161.0 over WHITE OAKS RD & NSRR
COUNTY: MCLEAN
ROUTE: I-55 SB
MARKED ROUTE: I-55 SB
SECTION: 57-6HVB
STRUCTURE NO.: 057-0019
TYPE OF STRUCTURE: 5 SPAN CONTINUOUS STEEL
11 BEAM LINES - BK-BK ABUTS = 450.72'

CLEANING AND PAINTING OF THE EXISTING STRUCTURAL STEEL SHALL BE AS SPECIFIED IN THE SPECIAL PROVISIONS FOR "CLEANING AND PAINTING EXISTING STEEL STRUCTURES." ALL BEAMS, BEARINGS AND OTHER STRUCTURAL STEEL SHALL BE CLEANED PER NEAR WHITE BLASTNG SSPC-SP10.

THE DESIGNATED AREAS CLEANED PER NEAR WHITE BLAST CLEANING SSPC-SP10 SHALL BE PAINTED ACCORDING TO THE REQUIREMENTS OF PAINT SYSTEM 1 OZ/E/U. THE COLOR OF THE FINAL FINISH COAT FOR ALL INTERIOR STEEL SURFACES SHALL BE GRAY, MUNSELL NO. 5B 7/1. THE COLOR OF THE FINAL FINISH COAT FOR ALL EXTERIOR AND BOTTOM FLANGE OF THE FASCIA BEAMS SHALL BE INTERSTATE GREEN (MUNSELL COLOR STANDARD 7.5G 4/8).

A MINIMUM OF THREE (3) HIGH VOLUME AIR MONITOR WILL BE REQUIRED TO MONITOR AIR QUALITY DURING DUST PRODUCING OPERATIONS AT THIS SITE. SEE SPECIAL PROVISIONS FOR "CONTAINMENT AND DISPOSAL OF LEAD PAINT CLEANING RESIDUES".

THE EXISTING STRUCTURAL STEEL COATING CONTAINS LEAD. THE CONTRACTOR SHALL FOLLOW THE GUIDE BRIDGE SPECIAL PROVISIONS FOR "CONTAINMENT AND DISPOSAL OF LEAD PAINT CLEANING RESIDUES" TO DEAL WITH THE PRESENCE OF LEAD ON THIS PROJECT.

TWO (2) YEAR PAINT WARRANTY REQUIRED FOR THIS STRUCTURE

NOTE: DECK DRAINS WITHIN THE PAINTING LIMITS DESCRIBED ABOVE ARE TO BE PAINTED AT NO ADDITIONAL COST.

NOTE: ELASTOMERIC BEARINGS AT ABUTMENTS and PIERS 1, 2, and 4

TRAFFIC CONTROL AND PROTECTION

IT IS ANTICIPATED THAT THE CONTRACTOR WILL PAINT LOCATIONS #1 & #2 FROM EXISITING ROW UNDER THE STRUCTURES. TC&P STANDARD 701321 WILL BE USED TO PAINT SPAN 4 OVER WHITE OAKS ROAD. TC&P 701402 IS INCLUDED IN THIS CONTRACT IN THE EVENT THE CONTRACTOR NEEDS TO PAINT SPAN 1 FROM ABOVE ON I-55.

LOCATION #3

DESCRIPTION: I-55 BUSN LOOP over NSRR - 0.49 mi E. of US 51
COUNTY: MCLEAN
ROUTE: I-55 BUSN LOOP
MARKED ROUTE: I-55 BUSN LOOP
SECTION: 1-VB
STRUCTURE NO.: 057-0064
TYPE OF STRUCTURE: 5 SPAN CONTINUCUS STEEL
10 BEAM LINES - BK-BK ABUTS = 306.0'

CLEANING AND PAINTING OF THE EXISTING STRUCTURAL STEEL SHALL BE AS SPECIFIED IN THE SPECIAL PROVISIONS FOR "CLEANING AND PAINTING EXISTING STEEL STRUCTURES." ALL BEAMS, BEARINGS AND OTHER STRUCTURAL STEEL SHALL BE CLEANED PER NEAR WHITE BLASTNG SSPC-SP10.

THE DESIGNATED AREAS CLEANED PER NEAR WHITE BLAST CLEANING SSPC-SP10 SHALL BE PAINTED ACCORDING TO THE REQUIREMENTS OF PAINT SYSTEM 1 OZ/E/U. THE COLOR OF THE FINAL FINISH COAT FOR ALL INTERIOR STEEL SURFACES SHALL BE GRAY, MUNSELL NO. 5B 7/1. THE COLOR OF THE FINAL FINISH COAT FOR ALL EXTERIOR AND BOTTOM FLANGE OF THE FASCIA BEAMS SHALL BE INTERSTATE GREEN (MUNSELL COLOR STANDARD 7.5G 4/8).

THE STRUCTURE HAS AN EXISTING ZINC SILICATE AND VINYL PAINT SYSTEM. CONTAINMENT OF CLEANING RESIDUE IS REQUIRED TO CONTROL NUISANCE DUST. THE CONTRACTOR SHALL FOLLOW THE SPECIFICATIONS FOR CONTAINMENT AND DISPOSAL OF NON-LEAD PAINT CLEANING RESIDUES.

TWO (2) YEAR PAINT WARRANTY REQUIRED FOR THIS STRUCTURE

NOTE: DECK DRAINS WITHIN THE PAINTING LIMITS DESCRIBED ABOVE ARE TO BE PAINTED AT NO ADDITIONAL COST.

NOTE: ELASTOMERIC BEARINGS AT ABUTMENTS

TRAFFIC CONTROL AND PROTECTION

IT IS ANTICIPATED THAT THE CONTRACTOR WILL PAINT LOCATION #3 FROM UNDER THE STRUCTURE. ACCESS IS POSSIBLE FROM THE SW QUADRANT. THE CONTRACTOR CAN FIND PROPERTY OWNERS TO COORDINATE WITH USING MCLEAN COUNTY GIS. TC&P 701423 IS INCLUDED IN THIS CONTRACT IN THE EVENT THE THE CONTRACTOR NEEDS TO PAINT SPAN 5 FROM ABOVE ON I-55 BUSN LOOP.

AS–BUILT PLANS FOR S.N. 057–0018, 0019

FOR INFORMATION ONLY

ROUTE NO.	SECTION	COUNTY	TOTAL SHEETS	SHEET NO.
I-55/74	(57-6HVB)BY	McLean	173	61
FED. ROAD DIST. NO. 7	ILLINOIS	PROJECT		

Sheet 1 of 68

BENCH MARKS:

T.B.M. No. 6: Chiseled □ cut on Southeast wingwall of F.A.I. 55/74 Northbound bridge over White Oak Rd. & N.S. Railraod. – El. 248.217

T.B.M. No. 7: Brass plate at F.A.I. 55/74 ℄ median, Sta. 31+437.046 – El. 247.098

EXISTING STRUCTURE:

Sta. 31+260.705, F.A.I. 55/74 over White Oak Rd. and N.S. Railroad. Section 57–6HVB, dual five span cont. non–composite steel stringer structure, constructed in 1963. Length of str. 137.38 m (each). Substructure consists of eight reinf. concrete piers on creosoted timber piles and four reinf. concrete abutments supported on concrete piles.
Structure No. 057–0018 (Northbound)
Structure No. 057–0019 (Southbound)

PROPOSED IMPROVEMENT:

Existing dual structures to be widened in each direction. Existing superstructure (except stringers) to be removed, replaced and widened with five span continuous composite steel stringers. Exist. stringers to be jacked, cleaned, repainted. All expansion bearings to be replaced with elastomeric bearings. The fixed bearings shall be replaced with low profile fixed bearings. Existing substructure to be widened.
Exist. approach pavement to be removed and replaced with 9 m standard approach pavement. Traffic to be maintained utilizing stage construction.

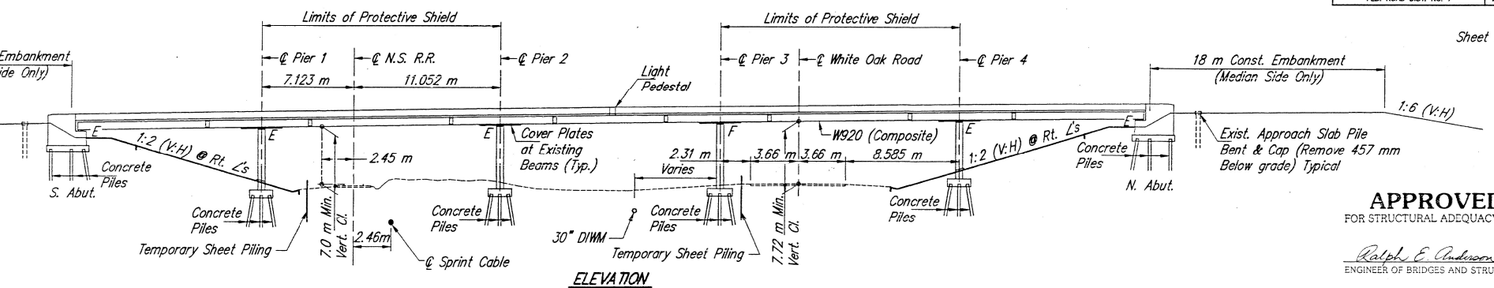

ELEVATION

NOTE: All horizontal clearances measured at right angles.

APPROVED
FOR STRUCTURAL ADEQUACY ONLY
Ralph E. Anderson
ENGINEER OF BRIDGES AND STRUCTURES

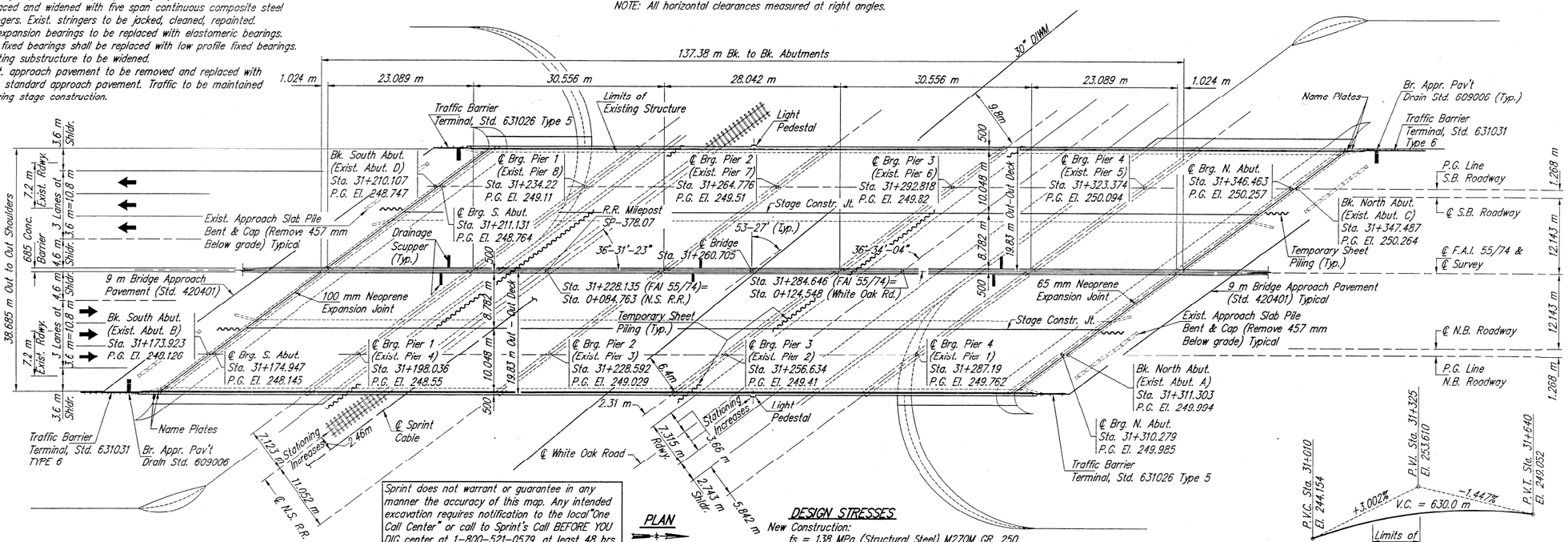

PLAN

Sprint does not warrant or guarantee in any manner the accuracy of this map. Any intended excavation requires notification to the local "One Call Center" or call to Sprint's Call BEFORE YOU DIG center at 1–800–521–0579, at least 48 hrs. prior to commencing activity.

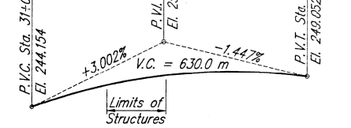

F.A.I. 55/74 – PROPOSED PROFILE GRADE

DESIGN STRESSES

New Construction:
fs = 138 MPa (Structural Steel) M270M GR. 250
f'c = 24 MPa
fy = 400 MPa (Reinf.)

Existing Construction:
fs = 138 MPa (Structural Steel)
fs = 138 MPa (Reinf.)
fc = 9.7 MPa

Design Specifications:
1996 AASHTO Specifications

Loading MS18 with Allowance for 1.2 kN/m^2 Future Wearing Surface

Seismic Data:
S.P.C. = A
A = 0.044g
S = 1.0

STATION 258+996.196
REBUILT 199_ BY
STATE OF ILLINOIS
F.A.I. RT. 55/74
SEC. (57–6HVB)BY
F.A. PROJ.
LOADING MS18 & ALT.
STR. NO. 057–001*

* 8–Northbound, 9–Southbound

Locate Nameplate on Southeast Wingwall of N.B. Structure & on Northwest Wingwall of S.B. Structure (See Std. 515001)

LETTERING FOR NAMEPLATE

TOP OF RAIL ELEV.

STATION	NORTH RAIL
0+040	240.129
0+050	240.171
0+060	240.22
0+070	240.273
0+080	240.313
0+090	240.356
0+100	240.402
0+110	240.446
0+120	240.488
0+130	240.528

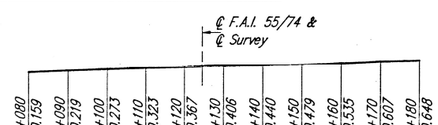

WHITE OAK ROAD – EXISTING PROFILE GRADE

081–005160
LICENSED
STRUCTURAL ENGINEER OF ILLINOIS
SPRINGFIELD, ILLINOIS

DATE SIGNED : 9-25-98
LIC. EXP. DATE : 11-30-98

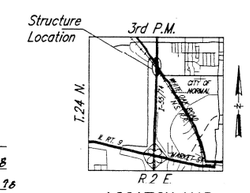

LOCATION MAP

GENERAL PLAN
F.A.I. 55/74 OVER N.S. R.R. & WHITE OAK ROAD
SECTION (57–6HVB)BY
STRUCTURE NO. 057–0018 (N.B.) & 057–0019 (S.B.)
McLEAN COUNTY
STATION 31+260.705

HANSON ENGINEERS INCORPORATED
1525 SOUTH SIXTH STREET SPRINGFIELD, IL 62703

JOB NO. 94S2063
DATE 4/17/98

LAYOUT	D.A.B.	4/17/98
DRAWN	D.A.B.	4/17/98
REVIEWED	J.J.T.	4/17/98

/c:\DPWWINCS\94S2063A\OPEDINC 09/25/98 11:01 DAV

MODEL: S1MODEL NAMES
FILE NAME: pw:\\ildot-pw.bentley.com:PWIDOT\Documents\IDOT Offices\District 5\Projects\D570G12\CADData\CADsheets\D570G12-Sht-As Builts Loc 1 & 2

USER NAME = Steven.Wood	DESIGNED -	REVISED -	
	DRAWN -	REVISED -	
PLOT SCALE = 40.0000 ' / in.	CHECKED -	REVISED -	
PLOT DATE = 8/9/2023	DATE -	REVISED -	

STATE OF ILLINOIS
DEPARTMENT OF TRANSPORTATION

AS–BUILT PLANS
LOCATION #1 & #2 S.N. 057–0018 (NB) & 057–0019 (SB)

SCALE: NONE | SHEET 1 OF 10 SHEETS | STA. TO STA.

* FAI-55 & FAP 704

F.A.* RTE.	SECTION	COUNTY	TOTAL SHEETS	SHEET NO.
*	**	MCLEAN	26	9
** D5 BRIDGE PAINTING 2024-1		CONTRACT NO. 70G12		
		ILLINOIS	FED. AID PROJECT	

AS–BUILT PLANS FOR S.N. 057–0018, 0019

FOR INFORMATION ONLY

ROUTE NO.	SECTION	COUNTY	TOTAL SHEETS	SHEET NO.
I-55/74	(57-6HVB)BY	McLean	173	64
FED. ROAD DIST. NO. 7		ILLINOIS	PROJECT	

Sheet 4 of 68

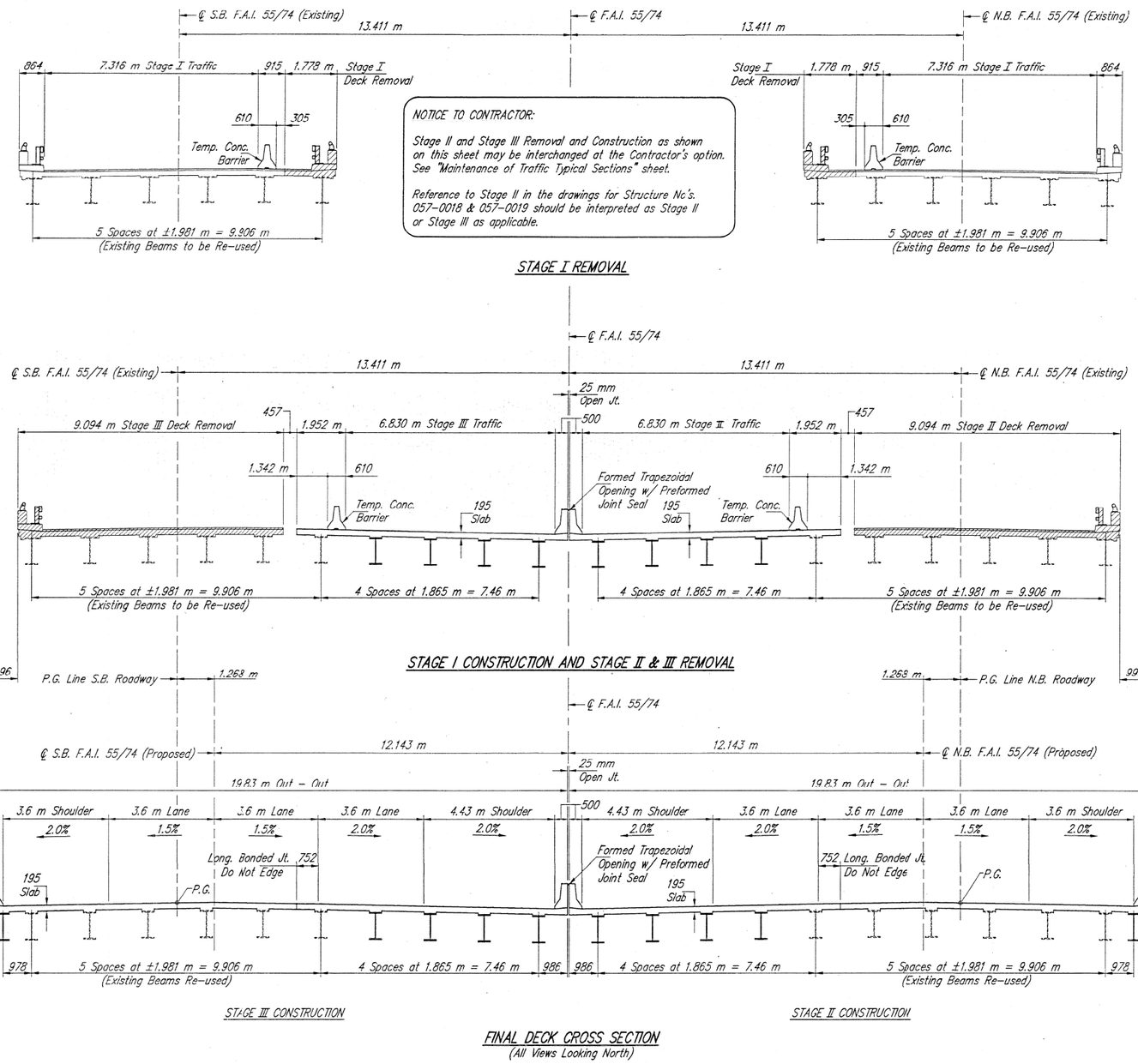

FINAL DECK CROSS SECTION
(All Views Looking North)

NOTICE TO CONTRACTOR:

Stage II and Stage III Removal and Construction as shown on this sheet may be interchanged at the Contractor's option. See "Maintenance of Traffic Typical Sections" sheet.

Reference to Stage II in the drawings for Structure No's. 057–0018 & 057–0019 should be interpreted as Stage II or Stage III as applicable.

STAGE CONSTRUCTION

See "MAINTENANCE OF TRAFFIC TYPICAL SECTIONS" sheet for additional information.

STAGE I

Place temporary concrete barriers and maintain two lanes of traffic on outside portion of bridge.
Provide traffic control and protection and protective shielding for White Oak Road and N.S. Railroad.
Remove median portion of existing bridge deck.
Disconnect diaphragms from existing beam on median side of bridge.
Jack and Crib existing beam on median side of bridge.
Remove portions of existing substructure.
Construct median extensions of piers and abutments.
Erect and construct new median portions of superstructure.

STAGE II

Fasten grates of inlets on bridge approach pavement slabs constructed in Stage I
Relocate temporary concrete barrier onto new portion of deck constructed in Stage I and maintain two lanes of traffic.
Remove remainder of existing bridge deck.
Move or remove existing outside beam as required to drive piles in outside extension of pier. Cost of moving or removing existing outside beam is included with the cost of "Driving Concrete Piles".
Jack and Crib remaining existing beams.
Remove portions of existing substructure.
Construct outside extensions of piers and abutments.
Erect and construct remainder of new superstructure.

Quantity of Temporary Concrete Barrier is included with the Roadway Plans.

Hatched areas indicate removal of existing concrete deck.

CONSTRUCTION STAGING
F.A.I. 55/74 OVER N.S. R.R. & WHITE OAK ROAD
SECTION (57–6HVB)BY
STRUCTURE NO. 057–0018 (N.B.) & 057–0019 (S.B.)
McLEAN COUNTY
STATION 31+260.705

HANSON ENGINEERS INCORPORATED
1525 SOUTH SIXTH STREET SPRINGFIELD, IL 62703

JOB NO. 94S2063
DATE 4/17/98

DESIGNED	D.A.R.	4/17/98
DRAWN	D.A.R.	4/17/98
REVIEWED	J.J.L.	4/17/98

/c:\DRAWINGS\94S2063A\STAGING.DWG 05/27/98 14:10 JLA

MODEL: S MODEL NAMES
FILE NAME: pw:\\lisd-pw.bentley.com:PWIDOT-Documents\IDOT Offices\District 5\Projects\D570G12\CADData\CADsheets\D570G12-Sht-As_Builts 1 & 2

USER NAME = Steven.Wood	DESIGNED -	REVISED -	
	DRAWN -	REVISED -	
PLOT SCALE = 40.0000 ' / in.	CHECKED -	REVISED -	
PLOT DATE = 8/9/2023	DATE -	REVISED -	

STATE OF ILLINOIS
DEPARTMENT OF TRANSPORTATION

AS–BUILT PLANS
LOCATION #1 & #2 S.N. 057–0018 (NB) & 057–0019 (SB)

SCALE: NONE | SHEET 2 OF 10 SHEETS | STA. | TO STA.

* FAI-55 & FAP 704

F.A.* RTE.	SECTION	COUNTY	TOTAL SHEETS	SHEET NO.
*	**	MCLEAN	26	10
** D5 BRIDGE PAINTING 2024-1		CONTRACT NO. 70G12		
		ILLINOIS	FED. AID PROJECT	

AS–BUILT PLANS FOR S.N. 057–0018, 0019

FOR INFORMATION ONLY

ROUTE NO.	SECTION	COUNTY	TOTAL SHEETS	SHEET NO.
I-55/74	(57-6HVB)BY	McLean		
FED. ROAD DIST. NO. 7		ILLINOIS	PROJECT	

Sheet 17 of 68

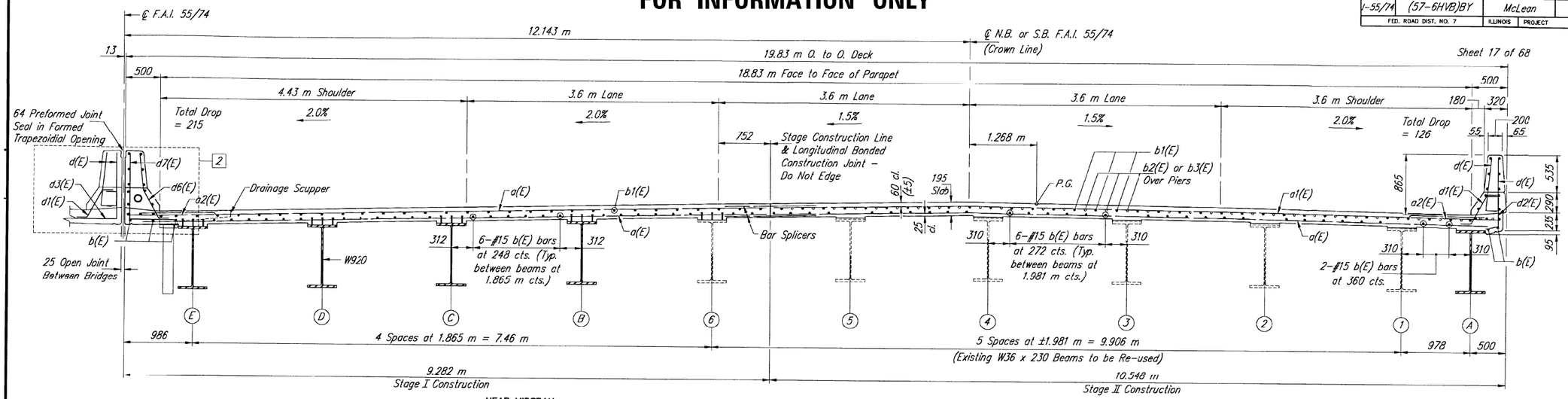

CROSS SECTION

(Northbound–Looking North; Southbound–Looking South)

NEAR MIDSPAN

NEAR PIER

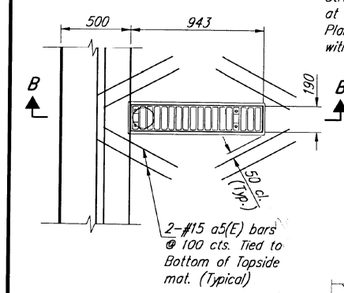

DRAINAGE SCUPPER PLAN

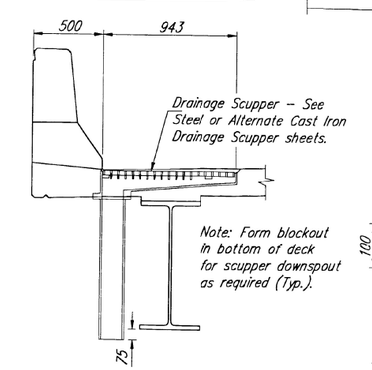

SECTION B–B

50 mm PVC Conduit at Southbound Structure only. Provide expansion fitting at each end of bridge parapet. See Lighting Plans for additional details. Cost included with the cost of Concrete Superstructure.

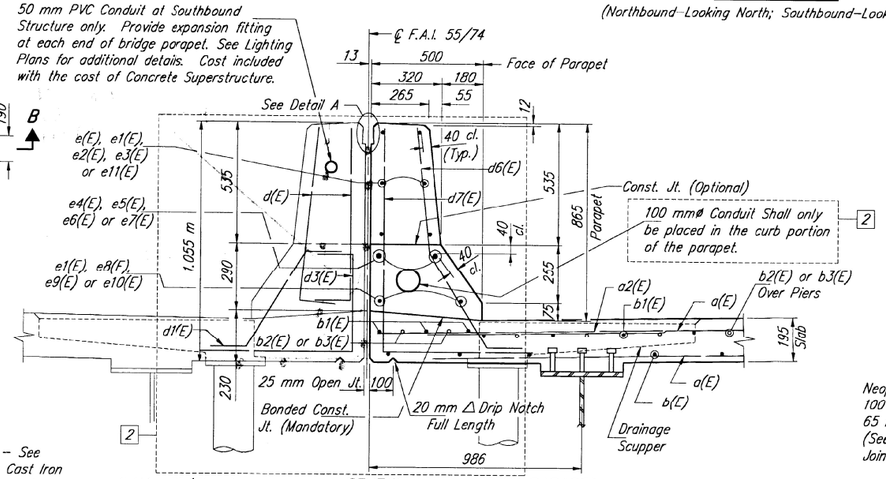

SECTION THRU MEDIAN PARAPET

(Looking North)

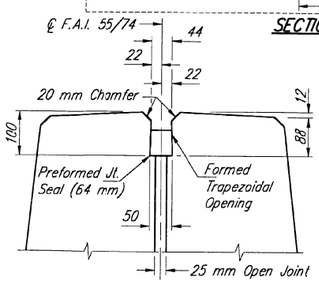

DETAIL A

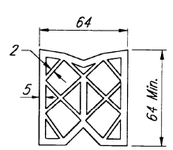

PREFORMED JOINT SEAL (64 mm)

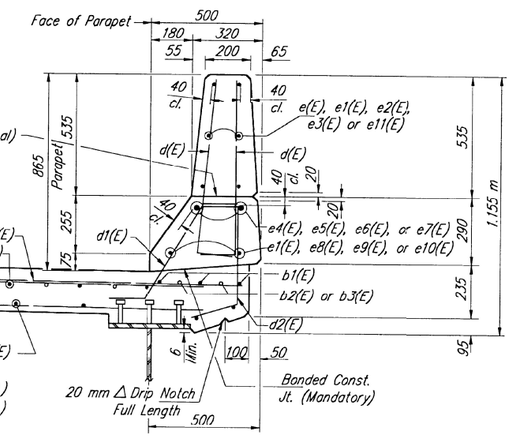

SECTION THRU FASCIA PARAPET

Place a(E) and h*(E) bars in back of anchor bolt as shown if required to maintain 25 mm (+0–3 mm). Anchor bolts should be tied to a*(E) and h*(E) bars.

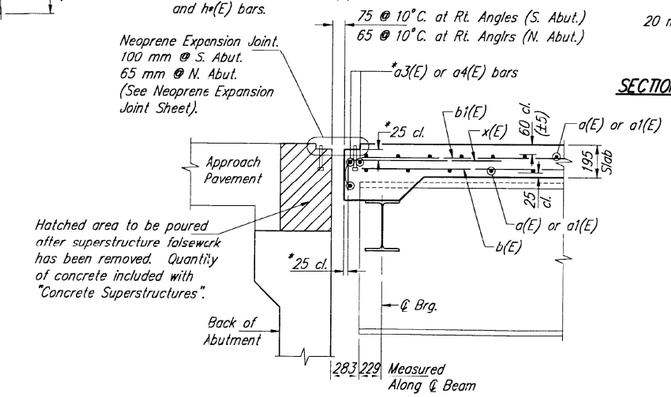

SECTION A–A

SUPERSTRUCTURE DETAILS
F.A.I. 55/74 OVER N.S. R.R. & WHITE OAK ROAD
SECTION (57–6HVB)BY
STRUCTURE NO. 057–0018 (N.B.) & 057–0019 (S.B.)
McLEAN COUNTY
STATION 31+260.705

HANSON ENGINEERS INCORPORATED
1525 SOUTH SIXTH STREET SPRINGFIELD, IL 62703

JOB NO. 94S2063
DATE 4/17/98

2 REVISED 03/19/99 – T.E.H.

LAYOUT	D.A.B.	4/29/98
DRAWN	D.A.B.	4/29/98
REVIEWED	J.J.T.	4/29/98

MODEL: $MODELNAMES
FILE NAME: pw:\\ildot-pw.bentley.com:PWIDOT\Documents\IDOT Offices\District 5\Projects\057G12\CADData\CADsheets\057G12-sht-As_Builts Loc 1 & 2
\DRAWINGS\94S2063_SUPRDETL.dwg 03/23/99 12:31 RKH

USER NAME = Steven.Wood	DESIGNED -	REVISED -	
	DRAWN -	REVISED -	
PLOT SCALE = 40.0000 ' / in.	CHECKED -	REVISED -	
PLOT DATE = 8/9/2023	DATE -	REVISED -	

STATE OF ILLINOIS
DEPARTMENT OF TRANSPORTATION

AS–BUILT PLANS
LOCATION #1 & #2 S.N. 057–0018 (NB) & 057–0019 (SB)

SCALE: NONE | SHEET 3 OF 10 SHEETS | STA. | TO STA.

* FAI-55 & FAP 704

F.A.* RTE.	SECTION	COUNTY	TOTAL SHEETS	SHEET NO.
*	**	MCLEAN	26	11
** D5 BRIDGE PAINTING 2024-1		CONTRACT NO. 70G12		
		ILLINOIS	FED. AID PROJECT	

AS–BUILT PLANS FOR S.N. 057–0018, 0019

FOR INFORMATION ONLY

ROUTE NO.	SECTION	COUNTY	TOTAL SHEETS	SHEET NO.
I-55/74	(57-6HVB)BY	McLean	173	22
FED. ROAD DIST. NO. 7		ILLINOIS	PROJECT	

Sheet 22 of 68

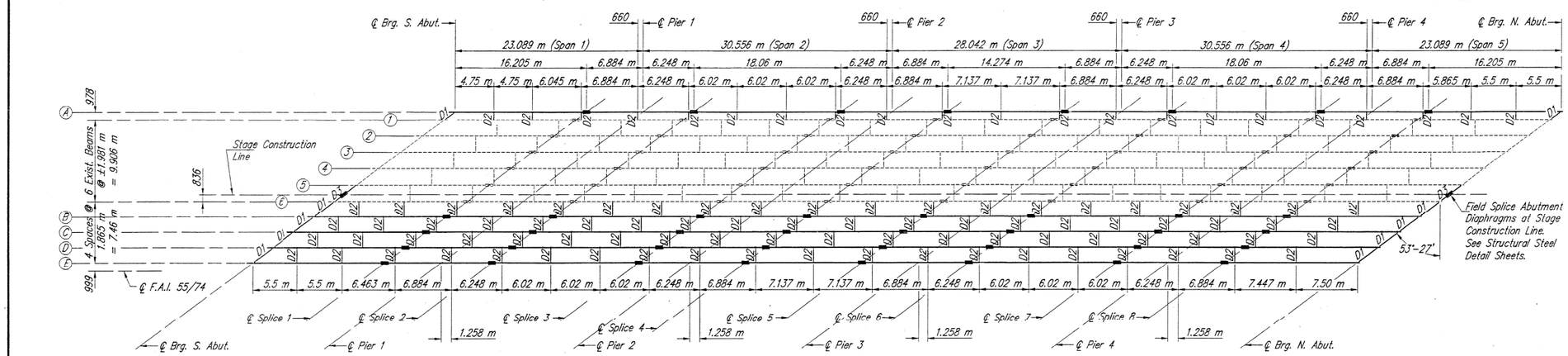

FRAMING PLAN (SOUTHBOUND)

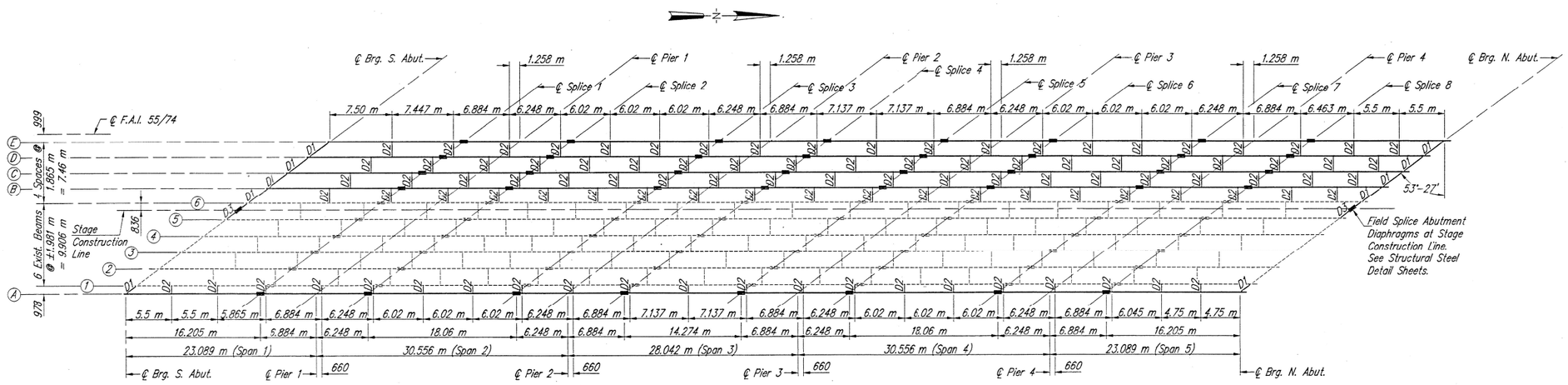

FRAMING PLAN (NORTHBOUND)

See Construction Staging Sheet for notes regarding stage construction of the structural steel.

FRAMING PLANS
F.A.I. 55/74 OVER N.S. R.R. & WHITE OAK ROAD
SECTION (57-6HVB)BY
STRUCTURE NO. 057-0018 (N.B.) & 057-0019 (S.B.)
McLEAN COUNTY
STATION 31+260.705

HANSON ENGINEERS INCORPORATED
1525 SOUTH SIXTH STREET SPRINGFIELD, IL 62703

JOB NO. 9452063
DATE 4/17/98

LAYOUT	D.A.B.	4/17/98
DRAWN	D.A.B.	4/17/98
REVIEWED	S.A.T.	4/17/98

/ | CRAWINGS | 9452063 | FRAMING.DWG 05/27/98 15:07 Z.4

MODEL: $MODEL NAMES
FILE NAME: pw:\\ildot-pw.bentley.com:PWIDOT\Documents\IDOT Offices\District 5\Projects\D570G12\CADData\CADSheets\D570G12-sht-As Builts Loc 1 & 2

USER NAME = Steven.Wood	DESIGNED -	REVISED -	STATE OF ILLINOIS DEPARTMENT OF TRANSPORTATION
	DRAWN -	REVISED -	
PLOT SCALE = 40.0000 ' / in.	CHECKED -	REVISED -	
PLOT DATE = 8/9/2023	DATE -	REVISED -	

AS–BUILT PLANS
LOCATION #1 & #2 S.N. 057–0018 (NB) & 057–0019 (SB)

SCALE: NONE | SHEET 4 OF 10 SHEETS | STA. | TO STA.

* FAI-55 & FAP 704

F.A.* RTE.	SECTION	COUNTY	TOTAL SHEETS	SHEET NO.
*	**	MCLEAN	26	12
** D5 BRIDGE PAINTING 2024-1		CONTRACT NO. 70G12		
		ILLINOIS	FED. AID PROJECT	

AS–BUILT PLANS FOR S.N. 057–0018, 0019

FOR INFORMATION ONLY

ROUTE NO.	SECTION	COUNTY	TOTAL SHEETS	SHEET NO.
I-55/74	(57-6HVB)BY	McLean	173	83
FED. ROAD DIST. NO. 7		ILLINOIS	PROJECT	

Sheet 23 of 68

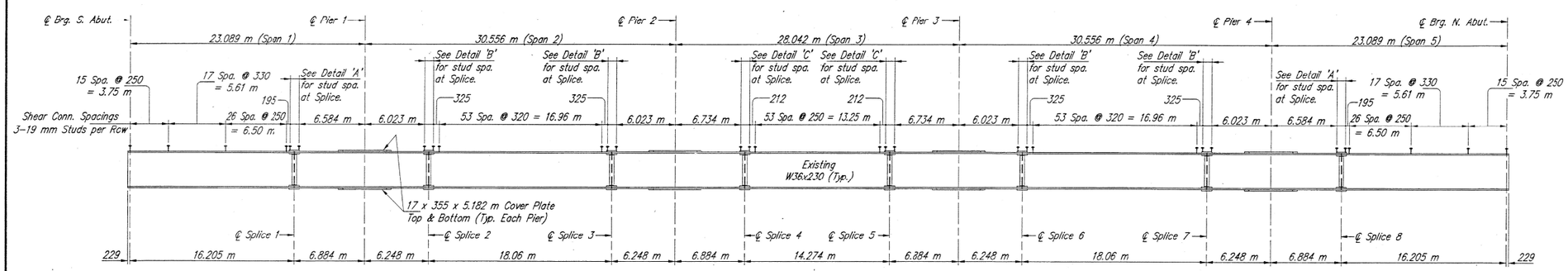

ELEVATION – EXISTING BEAMS 1 THRU 6

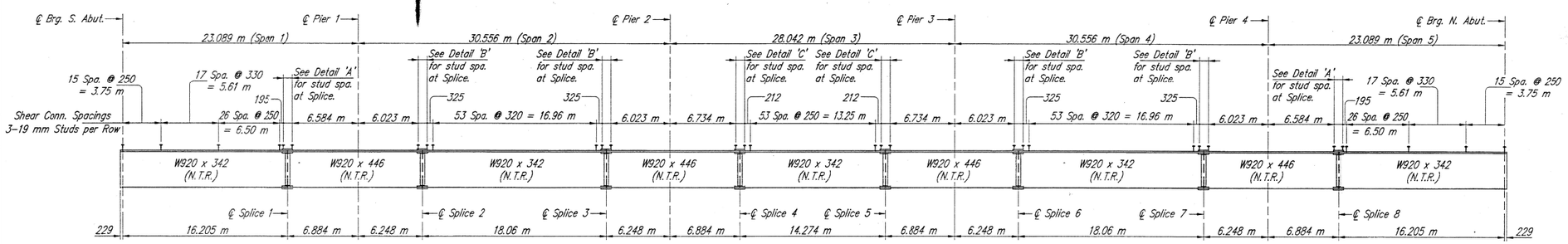

ELEVATION – NEW BEAMS A THRU E

N.T.R. Denotes Notch Toughness Requirements.

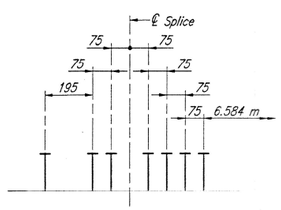

DETAIL 'A'
(Splice #1 Shown)
(Splice #8 Opp. Hand)

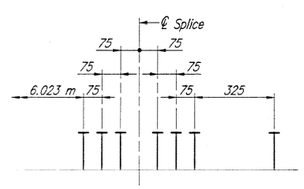

DETAIL 'B'
(Splice #2 & #6 Shown)
(Splice #3 & #7 Opp. Hand)

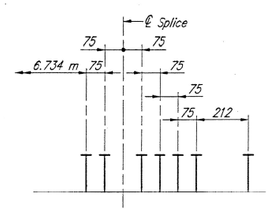

DETAIL 'C'
(Splice #4 Shown)
(Splice #5 Opp. Hand)

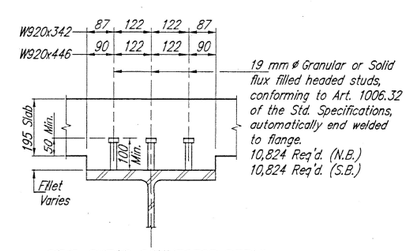

STUD SHEAR CONNECTOR DETAIL

STRUCTURAL STEEL DETAILS
F.A.I. 55/74 OVER N.S. R.R. & WHITE OAK ROAD
SECTION (57–6HVB)BY
STRUCTURE NO. 057–0018 (N.B.) & 057–0019 (S.B.)
McLEAN COUNTY
STATION 31+260.705

HANSON ENGINEERS INCORPORATED
1525 SOUTH SIXTH STREET SPRINGFIELD, IL 62703

JOB NO. 94S2063
DATE 4/17/98

LAYOUT	D.A.B.	4/17/98
DRAWN	D.A.B.	4/17/98
REVIEWED	J.J.T.	4/17/98

DRAWINGS\94S2063A1\STLDETL.DWG 05/27/98 15:09 J.A.A.

MODEL: SMODEL NAMES
FILE NAME: pw:\\illiid-pw.bentley.com:PWIDOT\Documents\IDOT Offices\District 5\Projects\D57G12\CADData\CADsheets\D57G12-In-As-Builts 1 of 1 & 2

USER NAME = Steven.Wood	DESIGNED -	REVISED -
	DRAWN -	REVISED -
PLOT SCALE = 40.0000 ' / in.	CHECKED -	REVISED -
PLOT DATE = 8/9/2023	DATE -	REVISED -

STATE OF ILLINOIS
DEPARTMENT OF TRANSPORTATION

AS–BUILT PLANS
LOCATION #1 & #2 S.N. 057–0018 (NB) & 057–0019 (SB)

SCALE: NONE | SHEET 5 OF 10 SHEETS | STA. | TO STA.

* FAI-55 & FAP 704

F.A.* RTE.	SECTION	COUNTY	TOTAL SHEETS	SHEET NO.
*	**	MCLEAN	26	13
** D5 BRIDGE PAINTING 2024-1		CONTRACT NO. 70G12		
		ILLINOIS	FED. AID PROJECT	

AS–BUILT PLANS FOR S.N. 057–0018, 0019

FOR INFORMATION ONLY

ROUTE NO.	SECTION	COUNTY	TOTAL SHEETS	SHEET NO.
I-55/74	(57-6HVB)BY	McLean	173	85
FED. ROAD DIST. NO. 7		ILLINOIS	PROJECT	

Sheet 25 of 68

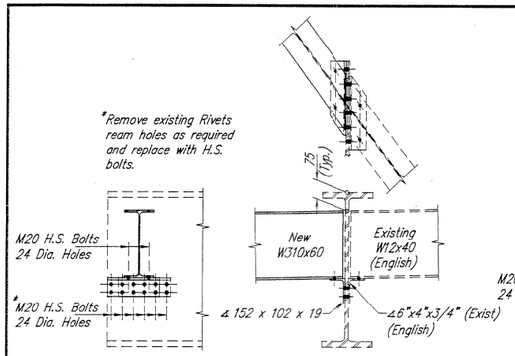

NEW END DIAPHRAGM – D1 (At Existing Beams)

4 Req'd. (N.B.)
4 Req'd. (S.B.)

New End Diaphragm – D3 Connection Similar.

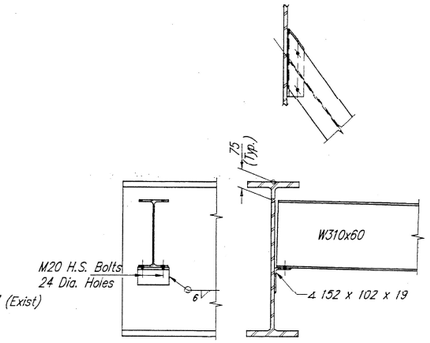

END DIAPHRAGM – D1 (At New Beams)

6 Req'd. (N.B.)
6 Req'd. (S.B.)

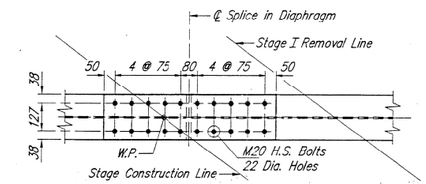

TOP FLANGE

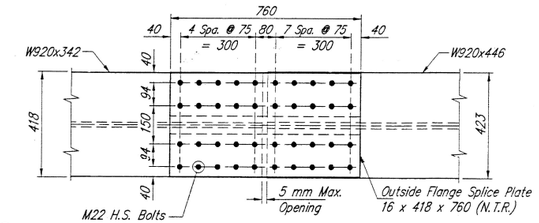

TOP and BOTTOM FLANGES

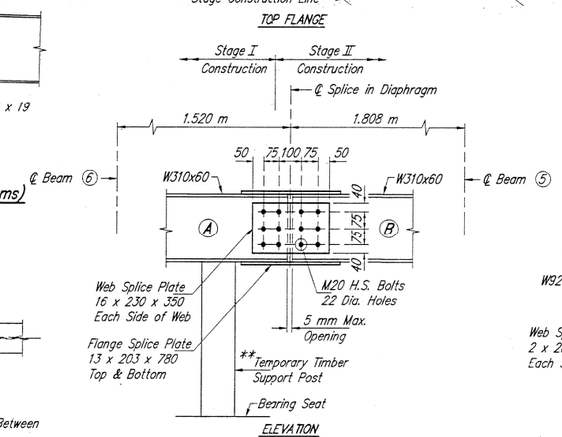

ELEVATION

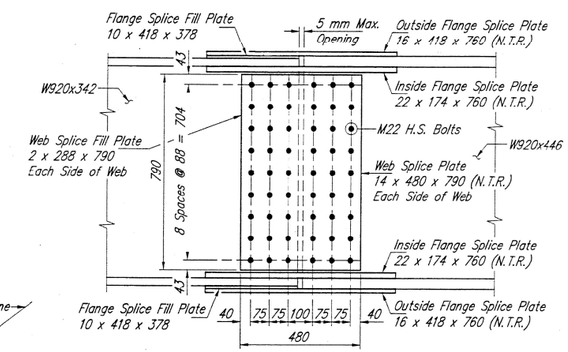

WEB

SPLICE DETAILS

40 Req'd. (N.B.)
40 Req'd. (S.B.)

Note: N.T.R. Denotes Notch Toughness Requirements

Note:
Two hardened washers shall be required over all oversized holes for diaphragms.

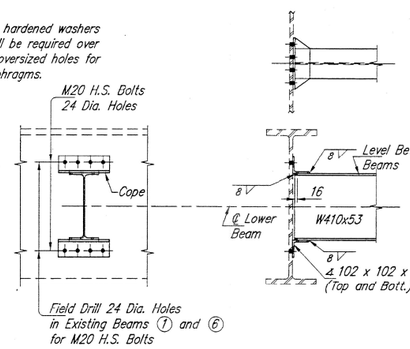

NEW INTERIOR DIAPHRAGMS – D2 (At Existing Beams)

41 Req'd. (N.B.)
41 Req'd. (S.B.)

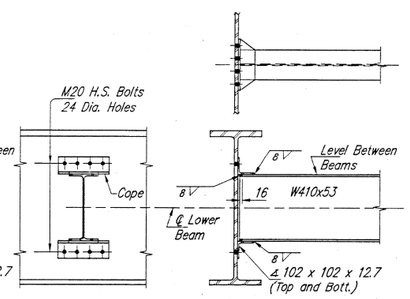

INTERIOR DIAPHRAGMS – D2 (At New Beams)

60 Req'd. (N.B.)
60 Req'd. (S.B.)

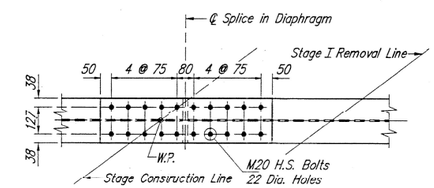

BOTTOM FLANGE

DIAPHRAGM – D3 SPLICE DETAILS AT ABUTMENTS

2 Req'd. (N.B.)
2 Req'd. (S.B.)

Diaphragms to be spliced at Stage Construction Line between beams 5 and 6.

Connections @ beams 5 and 6 Similar to New End Diaphragm – D1 (At Existing Beams)

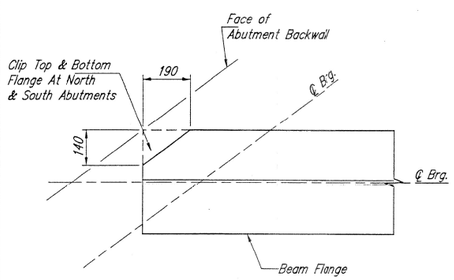

CLIPPED CORNER AT BEAM FLANGES

DIAPHRAGM SPLICE CONSTRUCTION SEQUENCE

1. Order W310x60 for two diaphragms in two sections each (A and B).
2. Attach part A of diaphragms to Beam 6 during Stage I Construction.
3. Place temporary support system between part A of diaphragms and bearing seat.
4. Attach top flange splice plate to part A of diaphragms during Stage I Construction making sure to fully torque bolts prior to placement of concrete deck.
5. Attach part B of diaphragms to both Beam 5 and part A of diaphragms during Stage II Construction.
6. Attach web splice plates to part A and B of diaphragms.
7. Attach bottom flange splice plate to part A and part B of Diaphragms.
8. Remove temporary support system after placement of concrete deck during Stage II Construction.

**Cost of temporary support posts, field drilling, rivet removal and reaming existing holes is included with "Furnishing and Erecting Structural Steel".

STRUCTURAL STEEL DETAILS
F.A.I. 55/74 OVER N.S. R.R. & WHITE OAK ROAD
SECTION (57-6HVB)BY
STRUCTURE NO. 057-0018 (N.B.) & 057-0019 (S.B.)
McLEAN COUNTY
STATION 31+260.705

HANSON ENGINEERS INCORPORATED
1525 SOUTH SIXTH STREET SPRINGFIELD, IL 62703

JOB NO. 9452063
DATE 4/17/98

LAYOUT	D.A.N.	5/26/98
DRAWN	D.A.N.	5/26/98
REVIEWED	J.J.T.	5/26/98

/ L:\DRAWINGS\94520634\STRDET3.DWG 05/04/98 09:26 JL4

MODEL: $MODEL$NAME
FILE NAME: pw:\\ildot-pw.bentley.com:PWIDOT\Documents\IDOT Offices\District 5\Projects\D570G12\CADData\CADsheets\D570G12-sh-As Builts List 1 & 2

USER NAME = Steven.Wood	DESIGNED -	REVISED -	
	DRAWN -	REVISED -	
PLOT SCALE = 40.0000 ' / in.	CHECKED -	REVISED -	
PLOT DATE = 8/9/2023	DATE -	REVISED -	

STATE OF ILLINOIS
DEPARTMENT OF TRANSPORTATION

AS–BUILT PLANS
LOCATION #1 & #2 S.N. 057–0018 (NB) & 057–0019 (SB)

SCALE: NONE | SHEET 6 OF 10 SHEETS | STA. TO STA.

* FAI-55 & FAP 704

F.A.* RTE.	SECTION	COUNTY	TOTAL SHEETS	SHEET NO.
*	**	MCLEAN	26	14
** D5 BRIDGE PAINTING 2024-1		CONTRACT NO. 70G12		
		ILLINOIS	FED. AID PROJECT	

AS–BUILT PLANS FOR S.N. 057–0018, 0019

FOR INFORMATION ONLY

ROUTE NO.	SECTION	COUNTY	TOTAL SHEETS	SHEET NO.
I-55/74	(57-6HVB)BY	McLean	173	86
FED. ROAD DIST. NO. 7		ILLINOIS	PROJECT	

Sheet 26 of 68

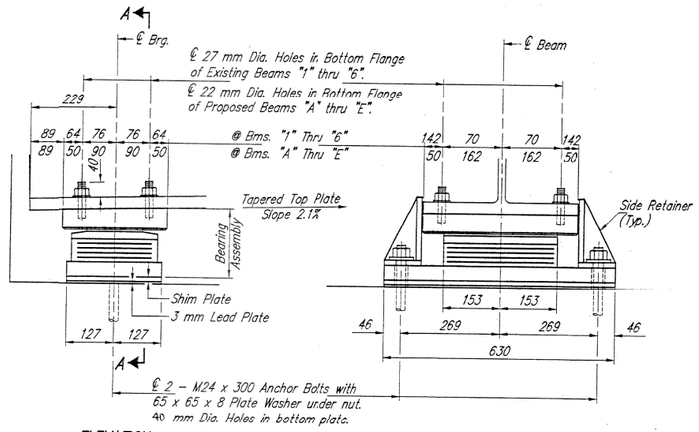

ELEVATION

SECTION A–A

TYPE II TFE ELASTOMERIC EXPANSION BEARING AT SOUTH ABUTMENT

No. Required = 11 (Northbound)
No. Required = 11 (Southbound)

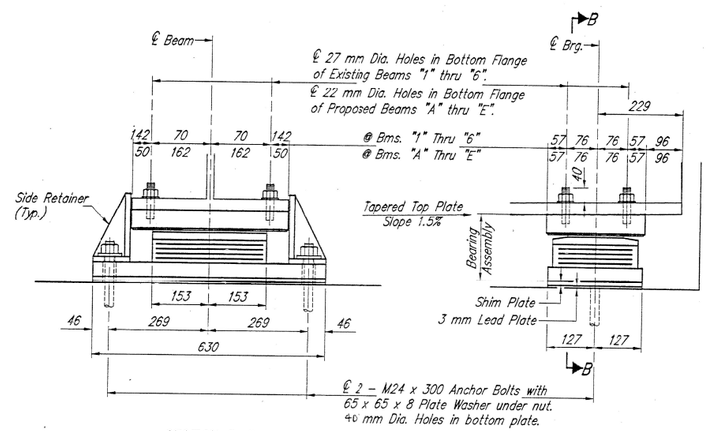

SECTION B–B

ELEVATION

TYPE II TFE ELASTOMERIC EXPANSION BEARING AT NORTH ABUTMENT

No. Required = 11 (Northbound)
No. Required = 11 (Southbound)

SHIM PLATES

Northbound (NB) or Southbound (SB)	North (N) or South (S) Abut.	Beam	Size
SB	S	1	ℙ 2x254x630
SB	S	2	ℙ 3x254x630
SB	S	3	ℙ 8x254x630
SB	N	1	ℙ 5x254x630
SB	N	2	ℙ 6x254x630
SB	N	3	ℙ 11x254x630
SB	N	4	ℙ 2x254x630
SB	N	B	ℙ 8x254x630
NB	S	6	ℙ 10x254x630
NB	S	C	ℙ 7x254x630
NB	S	D	ℙ 14x254x630
NB	N	5	ℙ 10x254x630
NB	N	B	ℙ 17x254x630
NB	N	D	ℙ 18x254x630

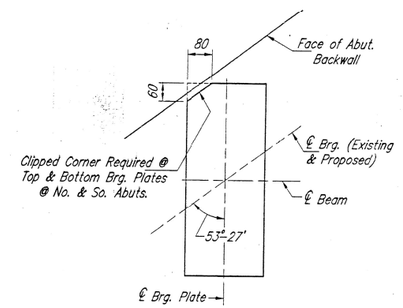

SCHEMATIC PLAN
CLIPPED CORNER AT BRG. PLATES

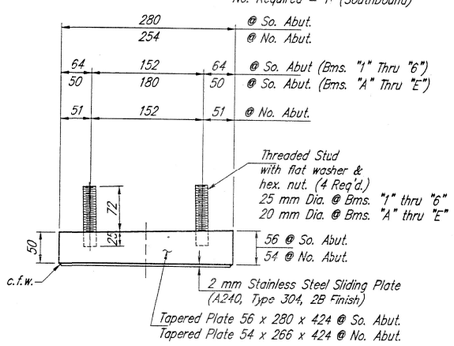

TOP BEARING ASSEMBLY

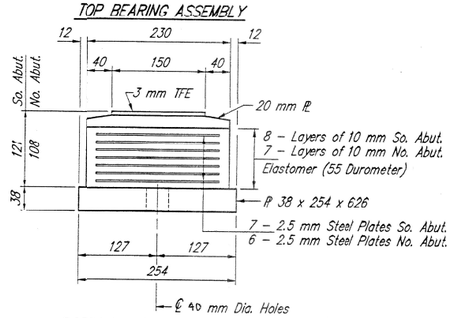

BOTTOM BEARING ASSEMBLY

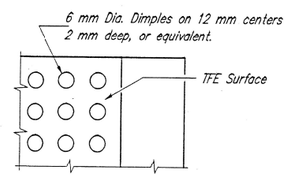

PLAN–TFE SURFACE

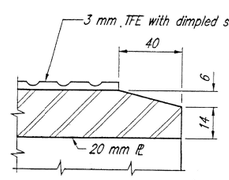

SECTION THRU TFE

Note: The 3 mm TFE sheet shall be bonded directly to the top steel plate with a two–component, medium viscosity epoxy resin, conforming to the requirements of the Federal Specification MMM–A–134, Type I. The bond agent shall be applied on the full area of the contact surfaces.

Bonding of 3 mm TFE sheet during vulcanizing process will be permitted provided the process and method of adjusting assembly height is approved by the Engineer.

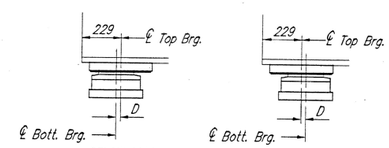

BELOW 10°C
(Move bottom bearing away from fixed bearing.)

ABOVE 10°C
(Move bottom bearing toward fixed bearing.)

SETTING ANCHOR BOLTS AT EXP. BRG.

D = 1 mm per each 10 m of expansion for every 8°C temp. change from the normal temp. of 10°C.

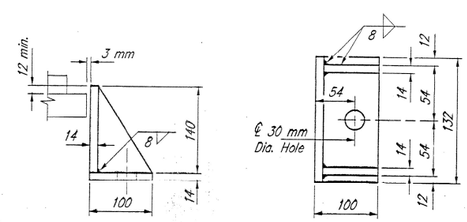

SIDE RETAINER AT ABUTS.

Equivalent rolled angle with stiffeners will be allowed in lieu of welded plates. Weight included with Structural Steel. (Number Required – 68)

Notes:

See Anchor Bolt Details Sheet for anchor bolt installation.

All dimensions are in millimeters (mm) except as noted.

BILL OF MATERIAL

Item	Unit	Total
Elastomeric Bearing Assembly, Type II	Each	44

BEARING DETAILS AT ABUTMENTS
F.A.I. 55/74 OVER N.S. R.R. & WHITE OAK ROAD
SECTION (57–6HVB)BY
STRUCTURE NO. 057–0018 (N.B.) & 057–0019 (S.B.)
McLEAN COUNTY
STATION 31+260.705

HANSON ENGINEERS INCORPORATED
1525 SOUTH SIXTH STREET SPRINGFIELD, IL 62703

JOB NO. 94S2063
DATE 4/17/98

* FAI-55 & FAP 704

USER NAME = Steven.Wood	DESIGNED -	REVISED -	
	DRAWN -	REVISED -	
PLOT SCALE = 40.0000 ' / in.	CHECKED -	REVISED -	
PLOT DATE = 8/9/2023	DATE -	REVISED -	

STATE OF ILLINOIS
DEPARTMENT OF TRANSPORTATION

AS–BUILT PLANS
LOCATION #1 & #2 S.N. 057–0018 (NB) & 057–0019 (SB)

SCALE: NONE | SHEET 7 OF 10 SHEETS | STA. TO STA.

F.A.* RTE.	SECTION	COUNTY	TOTAL SHEETS	SHEET NO.
*	**	MCLEAN	26	15
** D5 BRIDGE PAINTING 2024-1		CONTRACT NO. 70G12		
		ILLINOIS	FED. AID PROJECT	

MODEL: $MODELNAMES
FILE NAME: pw:\\ildot-pw.bentley.com:PWIDOT\Documents\IDOT Offices\District 5\Projects\D570G12\CAD\Data\CAD-Sheets\D570G12-sht-AS Builts 1 of 1 & 2

AS–BUILT PLANS FOR S.N. 057–0018, 0019

FOR INFORMATION ONLY

ROUTE NO.	SECTION	COUNTY	TOTAL SHEETS	SHEET NO.
I-55/74	(57-6HVB)BY	McLean	173	87
FED. ROAD DIST. NO. 7		ILLINOIS	PROJECT	

Sheet 27 of 68

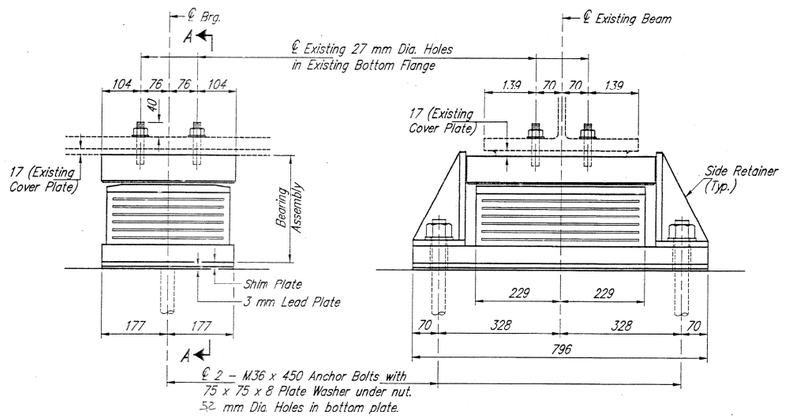

ELEVATION — SECTION A–A

TYPE II TFE ELASTOMERIC EXPANSION BEARING AT PIER 1
(EXISTING BEAMS "1" THRU "6")
No. Required = 6 (Northbound)
No. Required = 6 (Southbound)

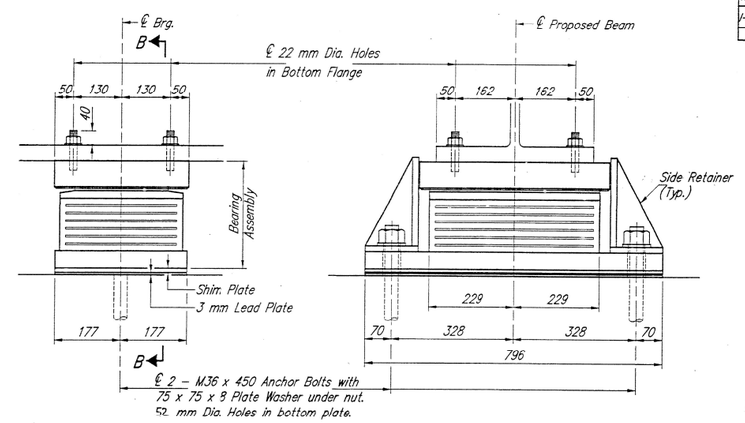

ELEVATION — SECTION B–B

TYPE II TFE ELASTOMERIC EXPANSION BEARING AT PIER 1
(PROPOSED BEAMS "A" THRU "E")
No. Required = 5 (Northbound)
No. Required = 5 (Southbound)

SHIM PLATES		
Northbound (NB) or Southbound (SB)	Beam	Size
NB	6	PL 9x354x796
NB	C	PL 3x354x796
NB	D	PL 5x354x796
NB	E	PL 8x354x796
SB	1	PL 2x354x796
SB	2	PL 3x354x796
SB	3	PL 9x354x796

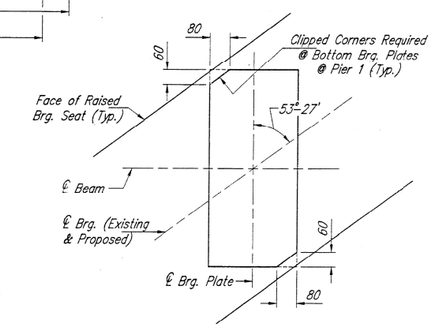

SCHEMATIC PLAN
CLIPPED CORNERS AT BRG. PLATES

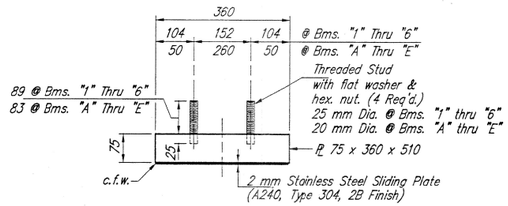

TOP BEARING ASSEMBLY

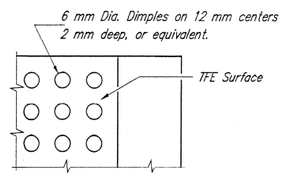

PLAN–TFE SURFACE

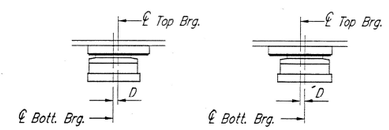

BELOW 10°C
(Move bottom bearing away from fixed bearing.)

ABOVE 10°C
(Move bottom bearing toward fixed bearing.)

SETTING ANCHOR BOLTS AT EXP. BRG.

D = 1 mm per each 10 m of expansion for every 8°C temp. change from the normal temp. of 10°C.

Notes:

See Anchor Bolt Details Sheet for anchor bolt installation.

All dimensions are in millimeters (mm) except as noted.

BILL OF MATERIAL

Item	Unit	Total
Elastomeric Bearing Assembly, Type II	Each	22

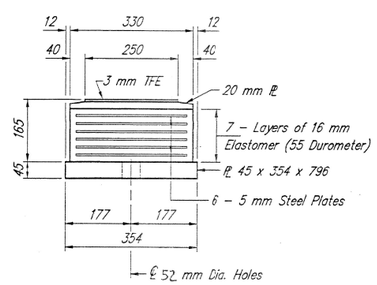

BOTTOM BEARING ASSEMBLY

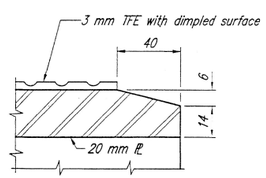

SECTION THRU TFE

Note: The 3 mm TFE sheet shall be bonded directly to the top steel plate with a two-component, medium viscosity epoxy resin, conforming to the requirements of the Federal Specification MMM-A-134, Type I. The bond agent shall be applied on the full area of the contact surfaces.

Bonding of 3 mm TFE sheet during vulcanizing process will be permitted provided the process and method of adjusting assembly height is approved by the Engineer.

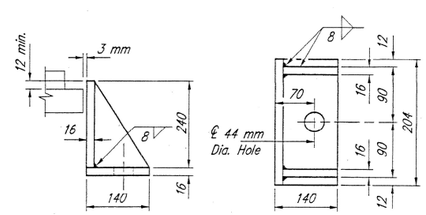

SIDE RETAINER AT PIER 1

Equivalent rolled angle with stiffeners will be allowed in lieu of welded plates. Weight included with Structural Steel. (Number Required = 44)

BEARING DETAILS AT PIER 1
F.A.I. 55/74 OVER N.S. R.R. & WHITE OAK ROAD
SECTION (57-6HVB)BY
STRUCTURE NO. 057–0018 (N.B.) & 057–0019 (S.B.)
McLEAN COUNTY
STATION 31+260.705

HANSON ENGINEERS INCORPORATED
1525 SOUTH SIXTH STREET SPRINGFIELD, IL 62703

JOB NO. 9452063
DATE 4/17/98

LAYOUT	D.A.N.	4/17/98
DRAWN	D.A.N.	4/17/98
REVIEWED	J.J.F.	4/17/98

\ DRAWINGS\9452063M.DRGTZ.DWG 05/27/98 15:14 AA

MODEL: $MODELNAMES
FILE NAME: pw:\\ildot-pw.bentley.com:PWIDOT\Documents\DOT Offices\District 5\Projects\D570G12\CADData\CADsheets\D570G12-sht-As Builts Loc 1 & 2

USER NAME = Steven.Wood	DESIGNED -	REVISED -	
	DRAWN -	REVISED -	
PLOT SCALE = 40.0000 ' / in.	CHECKED -	REVISED -	
PLOT DATE = 8/9/2023	DATE -	REVISED -	

STATE OF ILLINOIS
DEPARTMENT OF TRANSPORTATION

AS–BUILT PLANS
LOCATION #1 & #2 S.N. 057–0018 (NB) & 057–0019 (SB)

SCALE: NONE | SHEET 8 OF 10 SHEETS | STA. TO STA.

* FAI-55 & FAP 704

F.A.* RTE.	SECTION	COUNTY	TOTAL SHEETS	SHEET NO.
*	**	MCLEAN	26	16
** D5 BRIDGE PAINTING 2024-1		CONTRACT NO. 70G12		
		ILLINOIS	FED. AID PROJECT	

AS–BUILT PLANS FOR S.N. 057–0018, 0019

FOR INFORMATION ONLY

ROUTE NO.	SECTION	COUNTY	TOTAL SHEETS	SHEET NO.
I-55/74	(57-6HVB)BY	McLean	173	88
FED. ROAD DIST. NO. 7		ILLINOIS	PROJECT	

Sheet 28 of 68

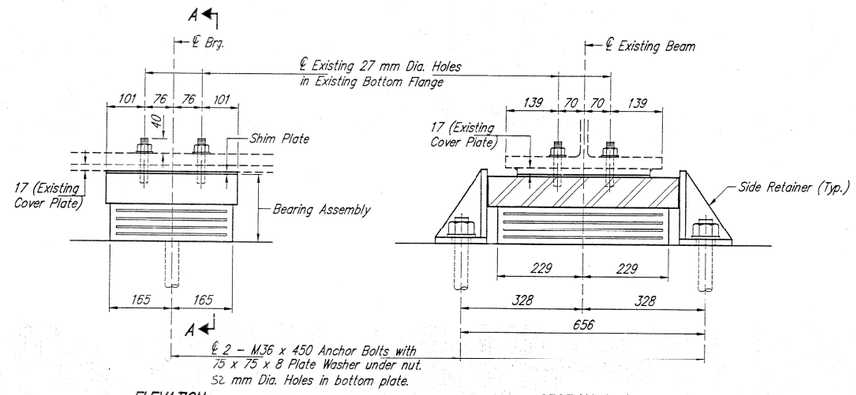

ELEVATION

SECTION A–A

TYPE I ELASTOMERIC EXPANSION BEARING AT PIERS 2 & 4

(EXISTING BEAMS "1" THRU "6")

No. Required = 12 (Northbound)

No. Required = 12 (Southbound)

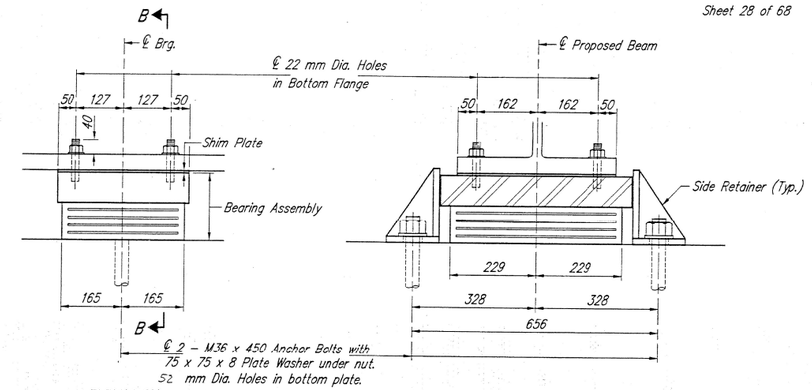

ELEVATION

SECTION B–B

TYPE I ELASTOMERIC EXPANSION BEARING AT PIERS 2 & 4

(PROPOSED BEAMS "A" THRU "E")

No. Required = 10 (Northbound)

No. Required = 10 (Southbound)

SHIM PLATES			
Pier No.	Northbound (NB) or Southbound (SB)	Beam	Size
2	NB	6	ℙ 10x354x356
4	NB	6	ℙ 10x354x356
2	SB	1	ℙ 3x354x356
2	SB	2	ℙ 3x354x356
2	SB	3	ℙ 9x354x356
4	SB	1	ℙ 2x354x356
4	SB	2	ℙ 2x354x356
4	SB	3	ℙ 9x354x356
2	NB	B	ℙ 9x354x424
2	NB	C	ℙ 6x354x424
2	NB	D	ℙ 3x354x424
4	NB	B	ℙ 11x354x424
4	NB	C	ℙ 27x354x424
4	NB	D	ℙ 14x354x424
4	SB	A	ℙ 16x354x424

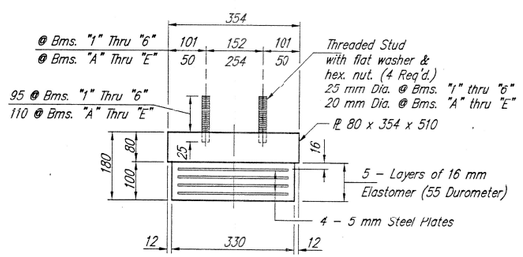

BEARING ASSEMBLY

Note: Shim plates shall not be placed under Bearing Assembly.

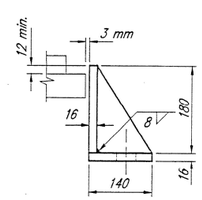

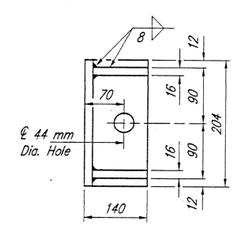

SIDE RETAINER

Equivalent rolled angle with stiffeners will be allowed in lieu of welded plates. Weight included with Structural Steel. (Number Required = 88)

Notes:

See Anchor Bolt Details for anchor bolt installation.

All dimensions are in millimeters (mm) except as noted.

BILL OF MATERIAL

Item	Unit	Total
Elastomeric Bearing Assembly, Type I	Each	44

BEARING DETAILS AT PIERS 2 & 4
F.A.I. 55/74 OVER N.S. R.R. & WHITE OAK ROAD
SECTION (57-6HVB)BY
STRUCTURE NO. 057-0018 (N.B.) & 057-0019 (S.B.)
McLEAN COUNTY
STATION 31+260.705

HANSON ENGINEERS INCORPORATED
1525 SOUTH SIXTH STREET SPRINGFIELD, IL 62703

JOB NO. 94S2063
DATE 4/17/98

LAYOUT	D.A.N.	4/17/98
DESIGN	D.A.N.	4/17/98
REVIEWED	J.J.T.	4/17/98

MODEL: $MODELNAMES
FILE NAME: pw:\\ildot-pw.bentley.com:PWIDOT\Documents\IDOT Offices\District 5\Project\D570G12\CADData\CADSheets\D570G12-sht-AS Builts 1 of 2

USER NAME = Steven.Wood	DESIGNED -	REVISED -	STATE OF ILLINOIS DEPARTMENT OF TRANSPORTATION
	DRAWN -	REVISED -	
PLOT SCALE = 40.0000 ' / in.	CHECKED -	REVISED -	
PLOT DATE = 8/9/2023	DATE -	REVISED -	

AS–BUILT PLANS
LOCATION #1 & #2 S.N. 057–0018 (NB) & 057–0019 (SB)

SCALE: NONE | SHEET 9 OF 10 SHEETS | STA. | TO STA.

* FAI-55 & FAP 704

F.A.* RTE.	SECTION	COUNTY	TOTAL SHEETS	SHEET NO.
*	**	MCLEAN	26	17
** D5 BRIDGE PAINTING 2024-1		CONTRACT NO. 70G12		
		ILLINOIS	FED. AID PROJECT	

AS–BUILT PLANS FOR S.N. 057–0018, 0019

FOR INFORMATION ONLY

ROUTE NO.	SECTION	COUNTY	TOTAL SHEETS	SHEET NO.
I-55/74	(57-6HVB)BY	McLean	173	89
FED. ROAD DIST. NO. 7		ILLINOIS	PROJECT	

Sheet 29 of 68

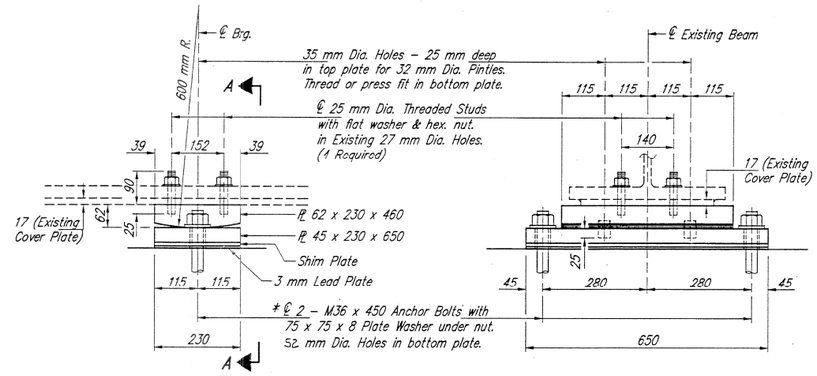

ELEVATION

SECTION A–A

FIXED BEARING AT PIER 3
(EXISTING BEAMS "1" THRU "6")
No. Required = 6 (Northbound)
No. Required = 6 (Southbound)

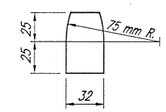

PINTLE

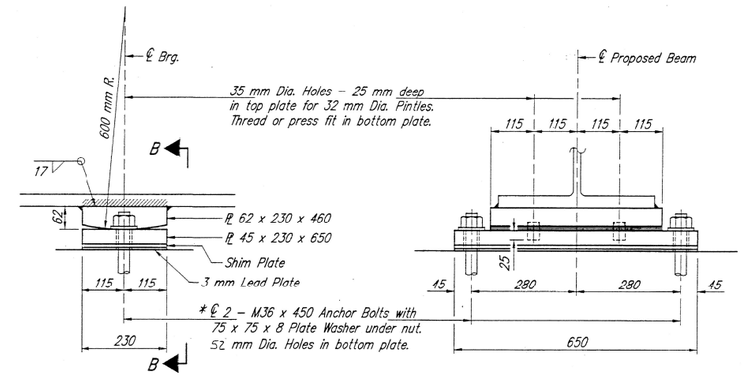

ELEVATION

SECTION B–B

FIXED BEARING AT PIER 3
(PROPOSED BEAMS "A" THRU "E")
No. Required = 5 (Northbound)
No. Required = 5 (Southbound)

SHIM PLATES		
Northbound (NB) or Southbound (SB)	Beam	Size
NB	6	PL 10x230x650
SB	1	PL 3x230x650
SB	2	PL 3x230x650
SB	3	PL 9x230x650
NB	C	PL 16x230x650
NB	D	PL 8x230x650

* Notes: Anchor bolts at fixed bearings may be built-into the masonry.

See Anchor Bolt Details Sheet for anchor bolt installation.

All dimensions are in millimeters (mm) except as noted.

BEARING DETAILS AT PIER 3
F.A.I. 55/74 OVER N.S. R.R. & WHITE OAK ROAD
SECTION (57-6HVB)BY
STRUCTURE NO. 057-0018 (N.B.) & 057-0019 (S.B.)
McLEAN COUNTY
STATION 31+260.705

HANSON ENGINEERS INCORPORATED
1525 SOUTH SIXTH STREET SPRINGFIELD, IL 62703

JOB NO. 94S2063
DATE 4/17/98

LAYOUT	D.A.N.	4/29/98
DRAWN	D.A.N.	4/29/98
REVIEWED	J.A.T.	4/29/98

* FAI-55 & FAP 704

USER NAME = Steven.Wood	DESIGNED -	REVISED -
	DRAWN -	REVISED -
PLOT SCALE = 40.0000 ' / in.	CHECKED -	REVISED -
PLOT DATE = 8/9/2023	DATE -	REVISED -

STATE OF ILLINOIS
DEPARTMENT OF TRANSPORTATION

AS–BUILT PLANS
LOCATION #1 & #2 S.N. 057–0018 (NB) & 057–0019 (SB)

SCALE: NONE | SHEET 10 OF 10 SHEETS | STA. TO STA.

F.A.* RTE.	SECTION	COUNTY	TOTAL SHEETS	SHEET NO.
*	**	MCLEAN	26	18
** D5 BRIDGE PAINTING 2024-1		CONTRACT NO. 70G12		
		ILLINOIS	FED. AID PROJECT	

MODEL: $MODELNAMES
FILE NAME: pw:\\ildot-pw.bentley.com:PWIDOT\Documents\IDOT Offices\District 5\Projects\D570G12\CADData\CADSheets\D570G12-sht-As Builts 1 & 2

AS–BUILT PLANS FOR S.N. 057–0064

FOR INFORMATION ONLY

℄ Bearing West Abut ~ East Abut 301-2½" = 301.21 ft
℄ " " " " ~ Pier #3 183.35
℄ " " " East Abut ~ Pier #3 117.86

STATE OF ILLINOIS
DEPARTMENT OF TRANSPORTATION

ROUTE NO.	SECTION	COUNTY	TOTAL SHEETS	SHEET NO.
F.A.I. 704	1-V-B-R	McLean	63	21

SHEET NO. 1
22 SHEETS

FED. ROAD DIST. NO. 7 | ILLINOIS | FED. AID PROJECT-

Bench Mark: "a" Chiseled on safety walk at southwest corner of existing bridge Elev. 373.89

Existing Structure: *057-0064; Built in 1939 as F.A. Route 5, Section 1-U-B-F. The 5 span continuous wide flange stucture has a total width of 58'-4" out to out of deck and a total length of 306'-0" bk. to bk. of abutments. The contractor shall remove and replace the existing superstructure and repair portions of the abutments utilizing stage construction

No salvage

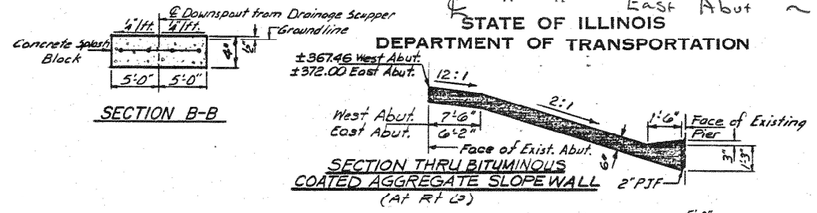

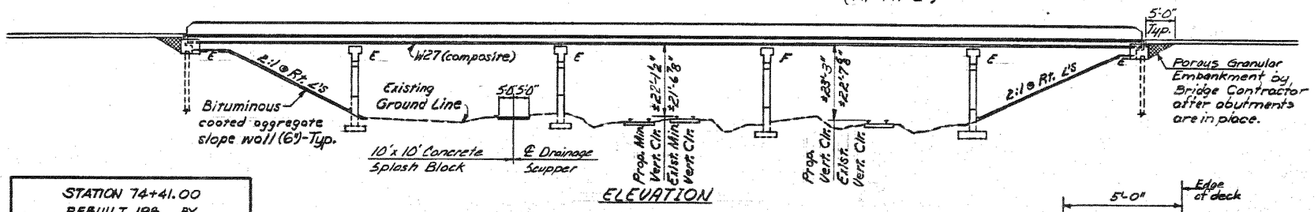

STATION 74+41.00
REBUILT 198 BY
STATE OF ILLINOIS
F.A. RTE. 704 SEC. 1-VBR
F.A. PROJ. BRF-704(6)
LOADING HS20
STR. NO. 057-0064

NAME PLATE
See Std. 2113

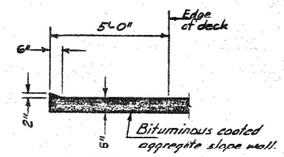

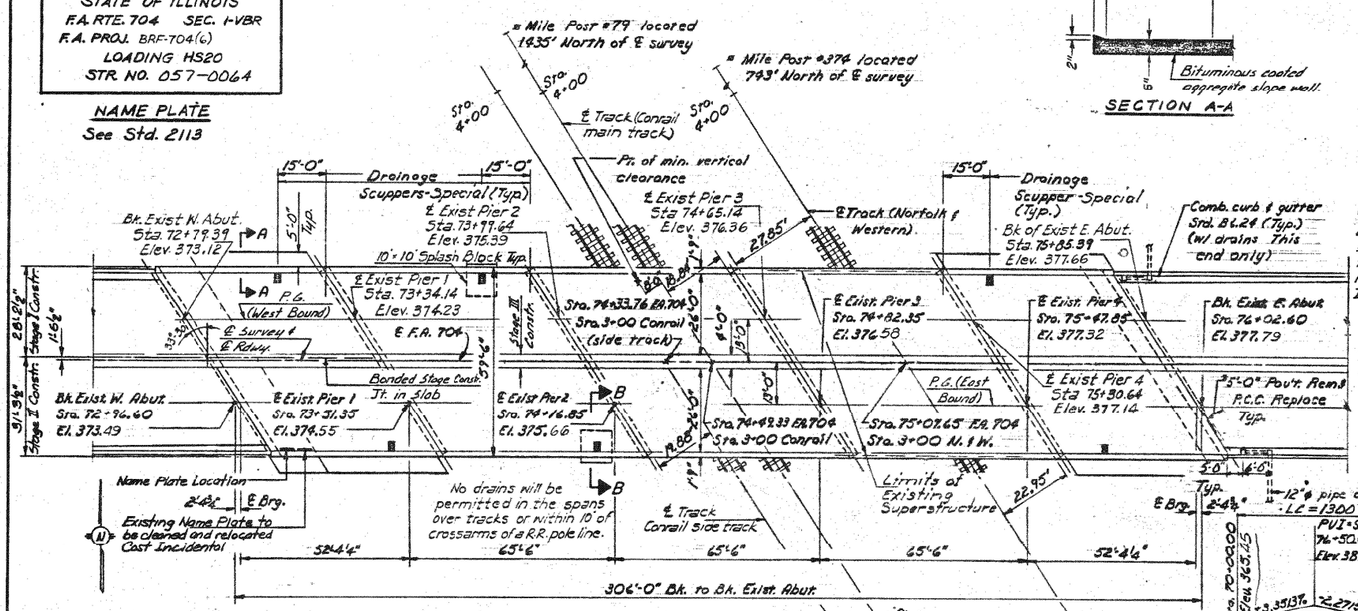

*Cost of the removal of the existing bituminous wearing surface shall be incidental to "Pavement Removal and P.C.C. Replacement-Type III, 10".

GENERAL NOTES

Fasteners shall be high strength bolts. Bolts ⅞"ϕ, open holes 15/16"ϕ. unless otherwise noted.

Calculated weight of Structural Steel = 291,990 Lbs. (AASHTO M-223)
1,190 Lbs. (AASHTO M-222)
59,650 Lbs. (AASHTO M-183)

The Zinc-silicate and vinyl paint system shall be used for shop and field painting of Structural Steel except where otherwise noted.

Field welding of construction accessories will not be permitted to the bottom flange of beams nor to the top flange for a distance equal to one-fourth the span length each way from the pier supports. Field welding in other areas will be permitted only when approved by the Engineer.

Anchor bolts shall be set before bolting diaphragms over supports.

The structural steel bearing plates of the Elastomeric Bearing Assembly and Fixed Bearing shall conform to the requirements of AASHTO M 222.

The main load carrying member components subject to tensile stress shall conform to the Supplemental Requirements for Notch Toughness Zone 2. These Components are the wide flange beams and all splice plate material of the wide flange beams.

Reinforcement bars shall conform to the requirements of AASHTO M-31 or M-53 Grade 60.

Plan dimensions and details relative to existing structure have been taken from existing plans and are subject to nominal construction variations. It shall be the Contractor's responsibility to verify such dimensions and details in the field and make necessary approved adjustments prior to construction or ordering of materials. Such variations shall not be cause for additional compensation for a change in the scope of the work, however, the Contractor will be paid for the quantity actually furnished at the unit price bid for the work.

Bearing seat surfaces shall be constructed or adjusted to the designated elevations within a tolerance of ⅛ inch. Adjustment shall be made either by grinding the surface or by shimming the bearing. Two ⅛" adjusting shims, of the dimensions of the bottom bearing plate, shall be provided for each bearing in addition to all other plates or shims. For Type I Elastomeric Bearings, shims of the dimensions of top plate shall be provided and placed as detailed.

The Concrete Splash Block shall be reinforced with welded wire fabric, 6" x 6"-W4.0 x W4.0, weighing 58Lbs. per 100 sq. ft. The Concrete Splash Block shall be billed as "Slope Wall (4")".

Layout of the Bituminous Coated Aggregate Slope Walls may be varied in the field to suit ground conditions as directed by the Engineer.

TOTAL BILL OF MATERIAL

ITEM	UNIT	SUPER	SUB	TOTAL
Class X Concrete	Cu.Yd.	528.5	95.5	624.0
Reinforcement Bars	Lbs.		9710	9710
Reinforcement Bars (Epoxy Coated)	Lbs.	122,790		122,790
Structural Steel	L.S.	1		1
Stud Shear Connectors	Each	7280		7280
Neoprene Expansion Joint (2½")	Lin. Ft.	144		144
Elastomeric Brg. Assembly, Type I	Each	30		30
Elastomeric Brg. Assembly, Type II	Each	10		10
Elastomeric Brg. Assembly, Type III	Each	10		10
Concrete Removal	Cu.Yd.		40	40
Name Plates	Each	1		1
Temporary Concrete Barrier	Lin. Ft.	306		306
Removal of Existing Superstructure	Each	1		1
Drainage Scuppers - Special	Each	6		6
Bituminous Coated Aggregate Slope Wall (6")	Sq.Yd.		840	840
Pavement Removal and Portland Cement Concrete Replacement - Type III, 10"	Sq.Yd.	69.3		69.3
Repair Concrete Structures	Sq.Ft.		69	69
Protective Coat	Sq.Yd.	2243		2243
Slope Wall (4")	Sq.Yd.		22.2	22.2
Structure Excavation	Cu.Yd.		70	70
Porous Granular Embankment	Tons		98	98

DESIGN STRESSES
f'_c = 3,500 psi
f_y = 60,000 psi (reinf.)
f_y = 50,000 psi (AASHTO M-223, Grade 50) (Str. Stl.)
f_y = 36,000 psi (AASHTO M183) (Str. Steel)
f_y = 50,000 psi (AASHTO M222) (Bearing Plates)

LOADING HS20-44
Design Specifications: 1983 AASHTO and 1984 Interims

Allow 25 #/sq. ft for future wearing surface.

DESIGNED	David Burdick
CHECKED	Dan D.K. McMullen
DRAWN	E.V. Taylor
CHECKED	DB DKM

September 26 1985
EXAMINED Craig S. Kasper — ENGINEER OF BRIDGE DESIGN
PASSED George T. Rowlands — ENGINEER OF BRIDGE AND STRUCTURES
APPROVED — DIRECTOR OF HIGHWAYS

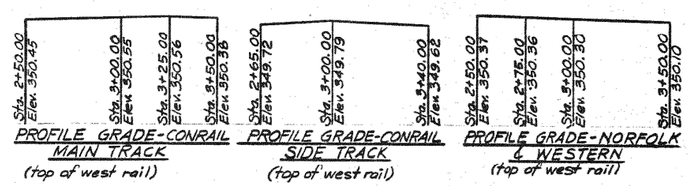

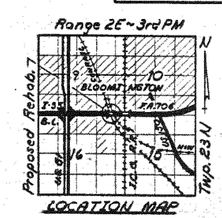

GENERAL PLAN
I-55 BUSINESS LOOP "VETERANS PARKWAY"
OVER CONRAIL AND N. & W. RAILWAY
F.A. ROUTE 704 SECTION 1-VBR
McLEAN COUNTY
STA. 74+41.00

Rev. 1-30-86 F.M.

* FAI-55 & FAP 704

USER NAME = Steven.Wood	DESIGNED -	REVISED -	
	DRAWN -	REVISED -	
PLOT SCALE = 40.0000 ' / in.	CHECKED -	REVISED -	
PLOT DATE = 8/9/2023	DATE -	REVISED -	

STATE OF ILLINOIS
DEPARTMENT OF TRANSPORTATION

AS–BUILT PLANS
LOCATION #3 S.N. 057–0064

SCALE: NONE | SHEET 1 OF 5 SHEETS | STA. | TO STA.

F.A.* RTE.	SECTION	COUNTY	TOTAL SHEETS	SHEET NO.
*	**	MCLEAN	26	19
** D5 BRIDGE PAINTING 2024-1		CONTRACT NO. 70G12		
		ILLINOIS	FED. AID PROJECT	

MODEL: $MODEL NAMES
FILE NAME: pw:\\ildot-pw.bentley.com:PWIDOT\Documents\IDOT Offices\District 5\Projects\D570G12\CADData\CADSheets\D570G12-sht-As Builts Loc 3

AS-BUILT PLANS FOR S.N. 057-0064

FOR INFORMATION ONLY

STATE OF ILLINOIS
DEPARTMENT OF TRANSPORTATION

ROUTE NO.	SECTION	COUNTY	TOTAL SHEETS	SHEET NO.
F.A.P. 704	1VBR	McLean	63	29
FED. ROAD DIST. NO. 7	ILLINOIS	FED. AID PROJECT-		

SHEET NO. 9
22 SHEETS

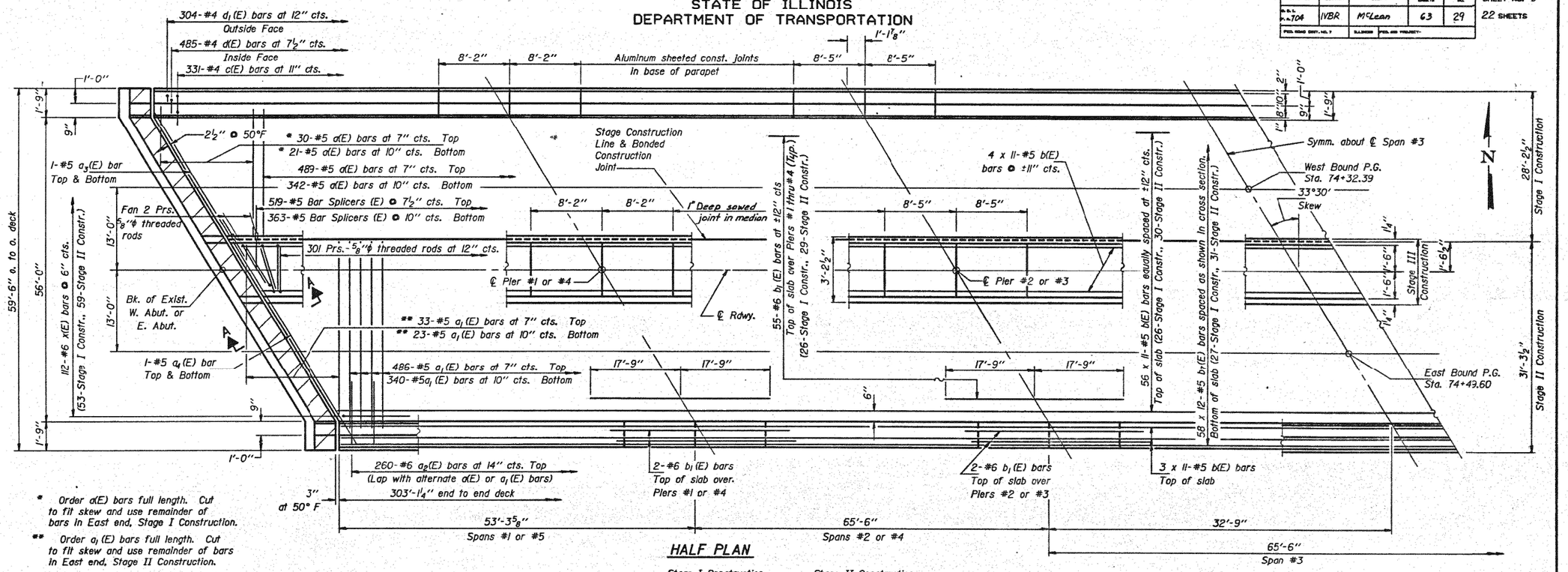

Notes: See sheet #10 for Superstructure Details and Bill of Material.
Reinforcement bars designated (E) shall be epoxy coated.
Bars indicated thus 20 x 3-#5 etc. indicates 20 lines of bars with 3 lengths per line.
See Sht. #3 for Bar Splicer Details.
See Sht. #1 for Drainage Scupper - Special spaces.
Hatched area to be poured after superstructure formwork has been removed. Quantity of Class X Concrete included with superstructure.

DESIGNED David Burdick	EXAMINED Roger L. Kaspar ENGINEER OF BRIDGE DESIGN	Sept 26 1985
CHECKED David K. McMullen	PASSED James T. Kirkham ENGINEER OF BRIDGES AND STRUCTURES	
DRAWN RON SOMMER	APPROVED DIRECTOR OF HIGHWAYS	
CHECKED DB DKM		

S-1-R(>15°) 12-1-83

SUPERSTRUCTURE
F.A. RTE. 704 SECTION 1-VBR
McLEAN COUNTY
STA. 74+41.00

* FAI-55 & FAP 704

USER NAME = Steven.Wood	DESIGNED -	REVISED -
	DRAWN -	REVISED -
PLOT SCALE = 40.0000 ' / in.	CHECKED -	REVISED -
PLOT DATE = 8/9/2023	DATE -	REVISED -

STATE OF ILLINOIS
DEPARTMENT OF TRANSPORTATION

AS-BUILT PLANS
LOCATION #3 S.N. 057-0064

SCALE: NONE | SHEET 2 OF 5 SHEETS | STA. TO STA.

F.A.* RTE.	SECTION	COUNTY	TOTAL SHEETS	SHEET NO.
*	**	MCLEAN	26	20
** D5 BRIDGE PAINTING 2024-1		CONTRACT NO. 70G12		
		ILLINOIS	FED. AID PROJECT	

MODEL: $MODEL NAMES
FILE NAME: pw:\\ildot-pw.bentley.com:PWIDOT\Documents\IDOT Offices\District 5\Projects\D570G12\CADData\CAD-Sheets\D570G12-sht-as-Builts 1 of 3

AS–BUILT PLANS FOR S.N. 057–0064

FOR INFORMATION ONLY

8 @ 4" → Change from Shop Drawing 2.61

57 @ 7" = ~~33.06~~ 33.25

STATE OF ILLINOIS
DEPARTMENT OF TRANSPORTATION

ROUTE NO.	SECTION	COUNTY	TOTAL SHEETS	SHEET NO.
F.A. 704	IVBR	McLean	63	34

SHEET NO. 14
22 SHEETS

Diaphragm D at the Stage Construction Joint shall be placed during Stage II Construction. See sht. #2 for details.

*** W27x94 (AASHTO M-223, Grade 50) for all Beams.

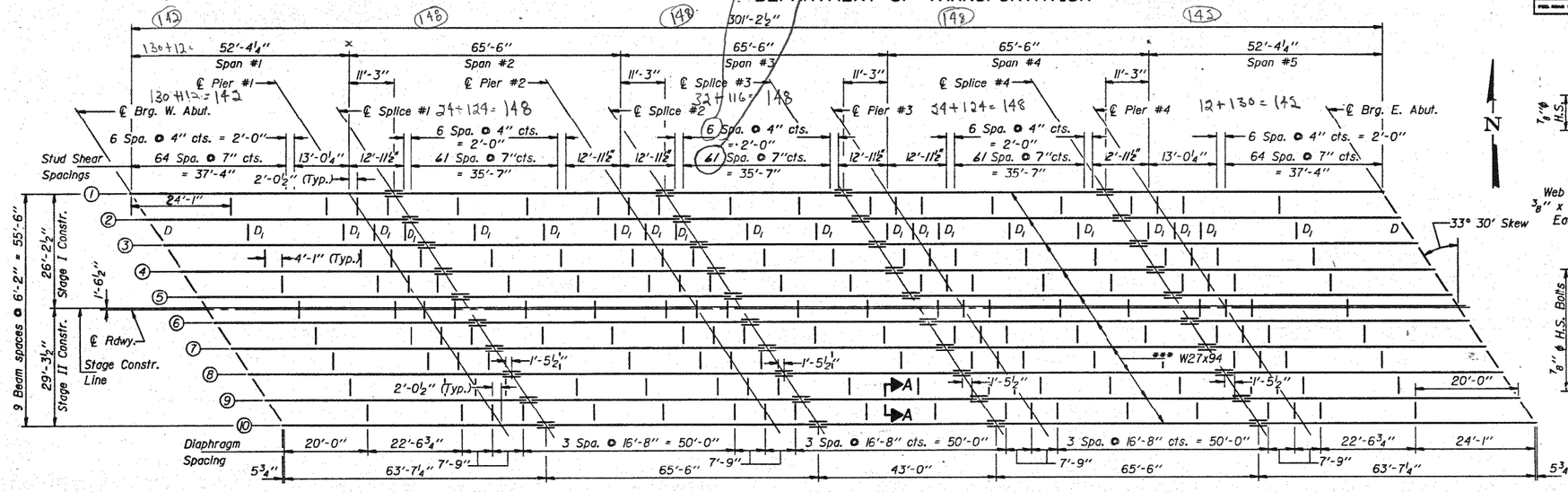

FRAMING PLAN

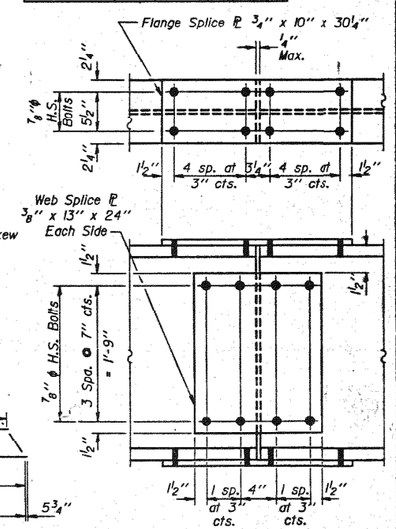

SPLICES #1, #2, #3 & #4

AASHTO M-223, Grade 50

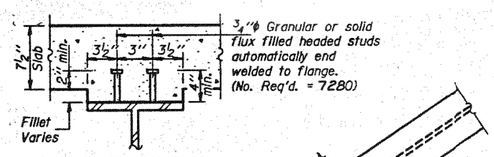

SECTION A-A

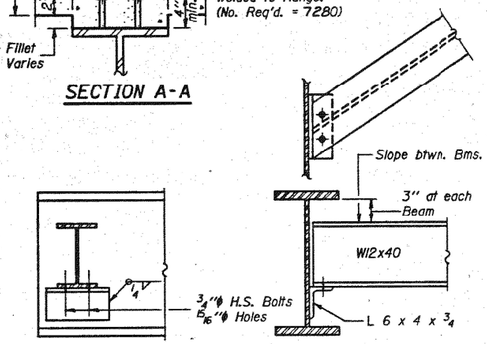

DIAPHRAGM D

18 Required

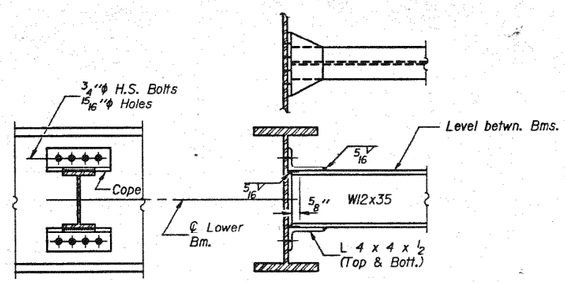

DIAPHRAGM D_1

180 Required

Is and *Ss* are the moment of inertia and section modulus of the steel section used in computing fs (Total & Overload).

Ic and *Sc* are the moment of inertia and section modulus of the composite section used in computing fs (Total & Overload).

VR is the maximum Live Load + Impact shear range in span.

Z is the plastic section modulus used to determine the Fully Plastic Moments in the non-composite areas.

Ma (Applied Moment)$=1.3[M_{DL} + M_{SDL} + \frac{5}{3}(M_{LL} + I)]$.

Mu is the Full Plastic Moment Capacity for Compact, Braced section.

fs (Overload) is the sum of the stresses due to $M_{DL} + M_{SDL} + \frac{5}{3}(M_{LL} + I)$.

fs (Total) is the sum of the stresses due to $1.3[M_{DL} + M_{SDL} + \frac{5}{3}(M_{LL} + I)]$.

* Service Load values.

INTERIOR BEAM MOMENT TABLE

		0.4 Sp. #1 or 0.6 Sp. #5	Piers #1 & #4	0.5 Sp. #2 or 0.5 Sp. #4	Piers #2 & #3	0.5 Sp. #3
Is	(in⁴)	3270	3270	3270	3270	3270
Ic	(in⁴)	9565		9565		9565
Ss	(in³)	243	243	243	243	243
Sc	(in³)	371		371		371
Z	(in³)		278		278	
w_{DL}	(K/ft.)	0.711	0.711	0.711	0.711	0.711
* M_{DL}	('K)	134.8	249.5	128.9	255.0	126.1
s_{DL}	(K/ft.)	0.286	0.286	0.286	0.286	0.286
* M_{SDL}	('K)	64.3	75.2	74.9	81.8	7.6
* M_{LL}	('K)	327.6	181.5	367.0	200.6	370.7
* M (Imp)	('K)	92.3	49.4	96.4	52.6	97.3
$\frac{5}{3}(M_{LL}+I)$	('K)	699.8	384.8	772.3	422.0	780.0
Ma	('K)	1168.6	922.4	1269.0	986.4	1271.0
Mu	('K)	———	1158.3		1158.3	
* fs DL non-comp	(k.s.i.)	6.7	16.0	6.4	16.6	6.2
* fs DL (comp)	(k.s.i.)	2.1		2.4		2.3
$fs\frac{5}{3}(LL+I)$	(k.s.i.)	22.6	19.0	25.0	20.8	25.2
fs (Overload)	(k.s.i.)	31.4	35.0	33.8	37.4	33.7
fs (Total)	(k.s.i.)	40.8	45.5	43.9	48.7	43.8
* VR	(K)	45.3		38.6		36.2

Notes: Two hardened washers shall be required over all 15/16" ϕ holes. All structural steel shall be AASHTO M-183 except as shown. Notch Toughness Requirements shall be required for all wide flange beams (W27x94) and all splice plate material.

* **INTERIOR BEAM REACTION TABLE**

		Abuts.	Prs. 1 & 4	Prs. 2 & 3
R_{DL}	(K)	20.0	64.8	65.4
R_{LL}	(K)	32.3	38.8	40.4
Imp.	(K)	9.1	10.6	10.6
R (Total)	(K)	61.4	114.2	116.4

** TOP OF FLANGE ELEVATIONS

	℄ Brg. W. Abut.	Pier #1	℄ Splice #1	Pier #2	℄ Splice #2	℄ Splice #3	Pier #3	℄ Splice #4	Pier #4	℄ Brg. E. Abut.
Beam #1	372.07	373.05	373.26	374.21	374.41	375.06	375.21	375.91	376.04	376.65
Beam #2	372.25	373.22	373.43	374.38	374.57	375.22	375.36	376.05	376.18	376.79
Beam #3	372.43	373.40	373.60	374.54	374.73	375.37	375.51	376.19	376.32	376.92
Beam #4	372.62	373.57	373.78	374.70	374.89	375.52	375.66	376.33	376.46	377.05
Beam #5	372.80	373.74	373.95	374.86	375.05	375.68	375.81	376.47	376.60	377.18
Beam #6	372.89	373.82	374.02	374.93	375.11	375.73	375.87	376.52	376.64	377.21
Beam #7	372.87	373.80	374.00	374.89	375.08	375.69	375.82	376.46	376.58	377.14
Beam #8	372.86	373.78	373.98	374.86	375.05	375.65	375.78	376.41	376.53	377.08
Beam #9	372.85	373.76	373.95	374.83	375.01	375.60	375.73	376.36	376.47	377.01
Beam #10	372.84	373.73	373.93	374.79	374.97	375.56	375.69	376.30	376.41	376.95

** For fabrication only.

DESIGNED David Burdick
CHECKED D.K.M.
DRAWN RON SOMMER
CHECKED DB DKM

Sept. 26 1985
EXAMINED Raj. D. Kaspar — ENGINEER OF BRIDGE DESIGN
PASSED James T. Kaufman — ENGINEER OF BRIDGES AND STRUCTURES
APPROVED — DIRECTOR OF HIGHWAYS

I-2-D 8-30-80

STRUCTURAL STEEL
F.A. RTE. 704 SECTION I-VBR
McLEAN COUNTY
STA. 74+41.00

Rev. 1-30-86 F.M.

* FAI-55 & FAP 704

USER NAME = Steven.Wood	DESIGNED -	REVISED -	
	DRAWN -	REVISED -	
PLOT SCALE = 40.0000 ' / in.	CHECKED -	REVISED -	
PLOT DATE = 8/9/2023	DATE -	REVISED -	

STATE OF ILLINOIS
DEPARTMENT OF TRANSPORTATION

AS–BUILT PLANS
LOCATION #3 S.N. 057–0064

SCALE: NONE | SHEET 3 OF 5 SHEETS | STA. | TO STA.

F.A.* RTE.	SECTION	COUNTY	TOTAL SHEETS	SHEET NO.
*	**	MCLEAN	26	21
** D5 BRIDGE PAINTING 2024-1		CONTRACT NO. 70G12		
		ILLINOIS FED. AID PROJECT		

MODEL: SMODELNAMES
FILE NAME: pw:\\ildot-pw.bentley.com:PWIDOT\Documents\IDOT Offices\District 5\Projects\D570G12\CADData\CADsheets\D570G12-sht-AS_Builts Loc 3

AS-BUILT PLANS FOR S.N. 057-0064

FOR INFORMATION ONLY

STATE OF ILLINOIS
DEPARTMENT OF TRANSPORTATION

ROUTE NO.	SECTION	COUNTY	TOTAL SHEETS	SHEET NO.
F.A.P. 704	IVBR	McLean	63	35

SHEET NO. 15
22 SHEETS

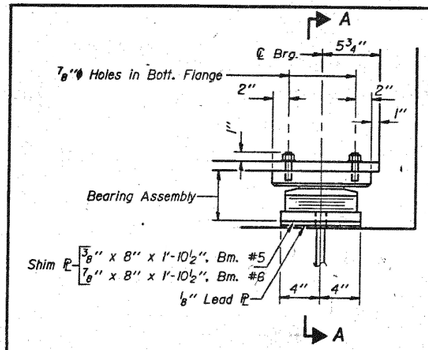

ELEVATION AT E. ABUT.

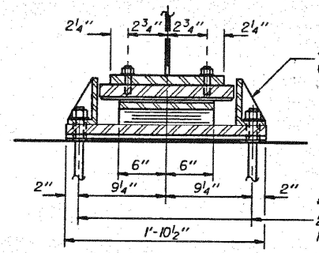

SECTION A-A

* ℄ 1" ϕ x 15" Anchor bolts with 2½" x 2½" x 5/16" ℙ washer under nut. 1½" ϕ Holes in bottom ℙ.

* Notes: Anchor bolts at fixed bearings may be built into the masonry.
See sheet #17 for Anchor Bolt Installation.
The structural steel bearing plates of the Elastomeric Bearing Assembly and the fixed bearings shall Conform to the requirements of A.A.S.H.T.O. M-222.

TYPE II TFE ELASTOMERIC EXP. BRG.

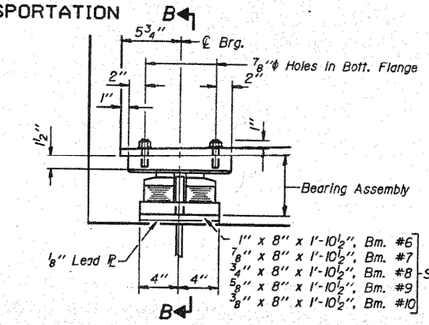

ELEVATION AT W. ABUT.
(Looking North)

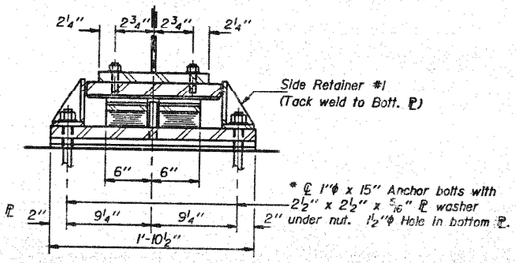

* ℄ 1"ϕ x 15" Anchor bolts with 2½" x 2½" x 5/16" ℙ washer 2" under nut. 1½"ϕ Hole in bottom ℙ.

SECTION B-B

TYPE III ELASTOMERIC EXP. BRG.

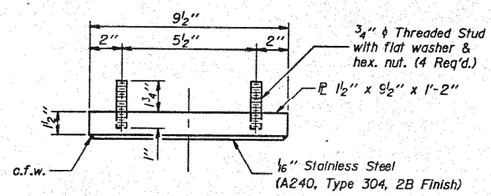

TOP BEARING ASSEMBLY

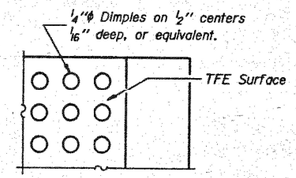

PLAN-TFE SURFACE

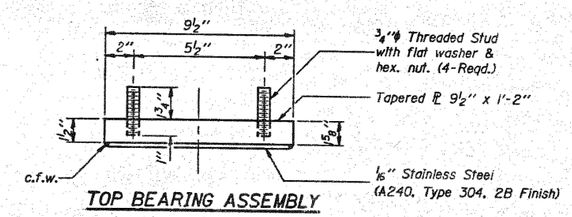

TOP BEARING ASSEMBLY

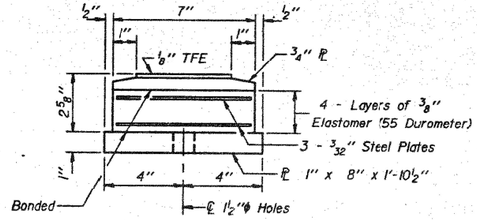

BOTTOM BEARING ASSEMBLY
(East Abut.)

Equivalent rolled angle with stiffeners will be allowed in lieu of welded plates.

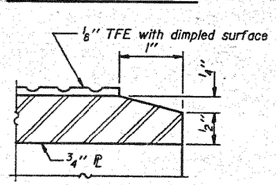

SECTION THRU TFE

Note: The ⅛" TFE sheet shall be bonded directly to the top steel plate with a two-component, medium viscosity epoxy resin, conforming to the requirements of the Federal Specification MMM-A-134, Type I. The bond agent shall be applied on the full area of the contact surfaces.

Bonding of ⅛" TFE sheet during vulcanizing process will be permitted provided the process and method of adjusting assembly height is approved by the Engineer.

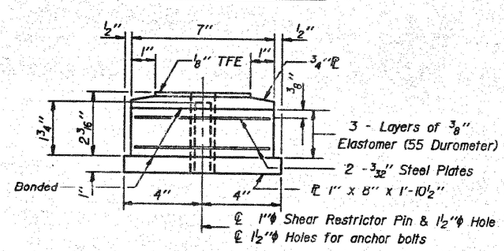

BOTTOM BEARING ASSEMBLY
(West Abut.)

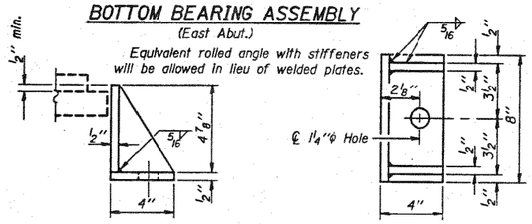

SIDE RETAINER #1
(48-Req'd.)

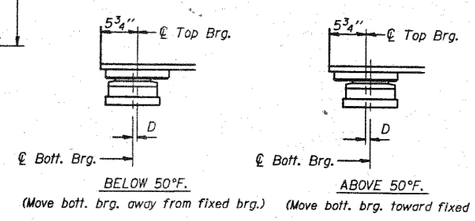

BELOW 50°F.
(Move bott. brg. away from fixed brg.)

ABOVE 50°F.
(Move bott. brg. toward fixed brg.)

SETTING ANCHOR BOLTS AT EXP. BRG.

D = ⅛" per each 100' of expansion for every 15° temp. change from the normal temp. of 50°F.

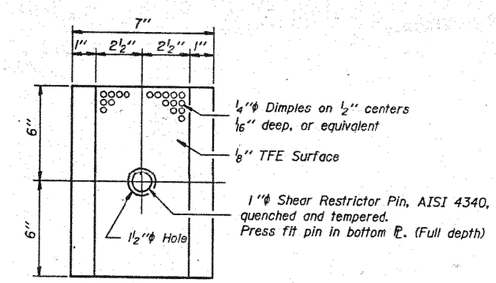

PLAN-TFE ELASTOMERIC BRG. AT WEST ABUT.

BILL OF MATERIAL

Item	Unit	Total
Elastomeric Bearing Assembly, Type II	Each	10
Elastomeric Bearing Assembly, Type III	Each	10

BEARING DETAILS
F.A. RTE. 704 SECTION 1-VBR
McLEAN COUNTY
STA. 74+41.00

DESIGNED David Burdick	EXAMINED Sept 26 1985 Raj. D. Kaspar ENGINEER OF BRIDGE DESIGN	
CHECKED DKM	PASSED James T. Kaufman ENGINEER OF BRIDGES AND STRUCTURES	
DRAWN RON SOMMER	APPROVED DIRECTOR OF HIGHWAYS	
CHECKED DB DKM		

I-2-E2 12-1-83

* FAI-55 & FAP 704

USER NAME = Steven.Wood	DESIGNED -	REVISED -	
	DRAWN -	REVISED -	
PLOT SCALE = 40.0000 ' / in.	CHECKED -	REVISED -	
PLOT DATE = 8/9/2023	DATE -	REVISED -	

STATE OF ILLINOIS
DEPARTMENT OF TRANSPORTATION

AS-BUILT PLANS
LOCATION #3 S.N. 057-0064

SCALE: NONE | SHEET 4 OF 5 SHEETS | STA. TO STA.

F.A.* RTE.	SECTION	COUNTY	TOTAL SHEETS	SHEET NO.
*	**	MCLEAN	26	22
** D5 BRIDGE PAINTING 2024-1		CONTRACT NO. 70G12		
		ILLINOIS FED. AID PROJECT		

MODEL: $MODEL\NAMES
FILE NAME: pw:\\ildot-pw.bentley.com:PWIDOT\Documents\IDOT Offices\District 5\Projects\D570G12\CADData\CADsheets\D570G12-sht-As Builts 1 of 3

STATE OF ILLINOIS
DEPARTMENT OF TRANSPORTATION

ROUTE NO.	SECTION	COUNTY	TOTAL SHEETS	SHEET NO.
F.A.P. 704	1VBR	McLean	63	36
FED. ROAD DIST. NO. 7	ILLINOIS	FED. AID PROJECT-		

SHEET NO. 16
22 SHEETS

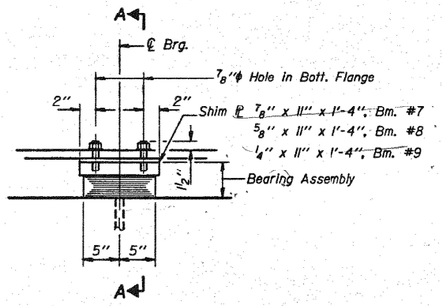

ELEVATION AT PIER #1

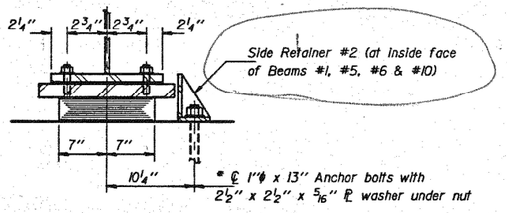

SECTION A-A

TYPE I ELASTOMERIC EXP. BRG.

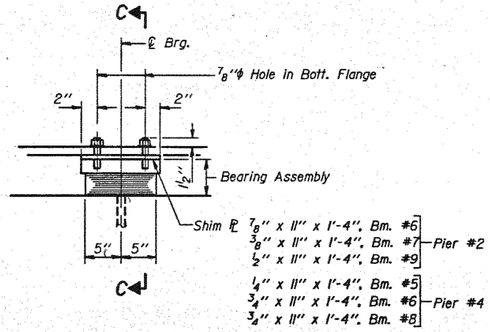

ELEVATION AT PIERS #2 & #4

TYPE I ELASTOMERIC EXP. BRG.

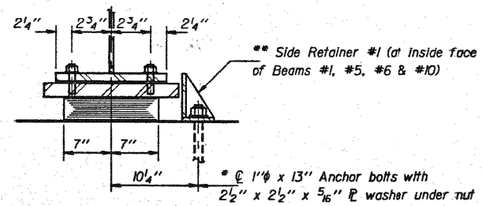

SECTION C-C

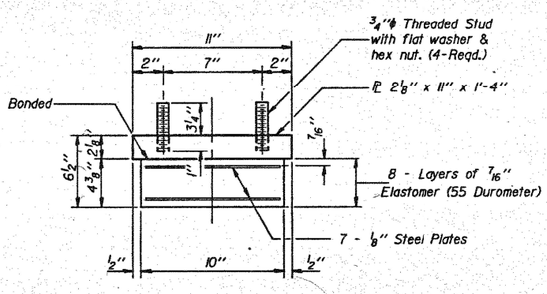

BEARING ASSEMBLY
(Pier #1)

Note: Shim plates shall not be placed under Bearing Assembly.

* Notes: Anchor bolts at fixed bearings may be built into the masonry.
See sheet #17 for Anchor Bolt Installation.
The structural steel bearing plates of the Elastomeric Bearing Assembly and the fixed bearings shall Conform to the requirements of A.A.S.H.T.O. M-222.

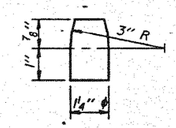

PINTLE

TYPE I ELASTOMERIC EXP. BRG.

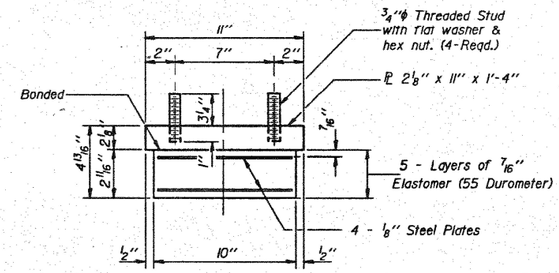

BEARING ASSEMBLY
(Piers #2 & #4)

Note: Shim plates shall not be placed under Bearing Assembly.

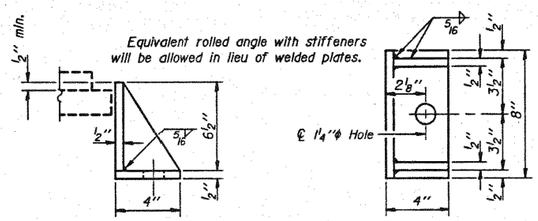

SIDE RETAINER #2
(4-Req'd.)

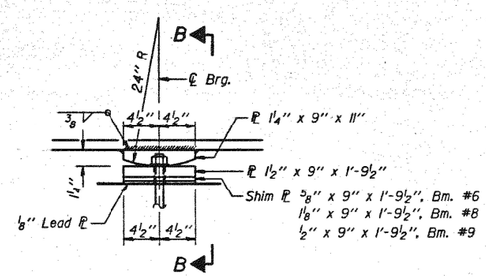

ELEVATION AT PIER #3

FIXED BEARING

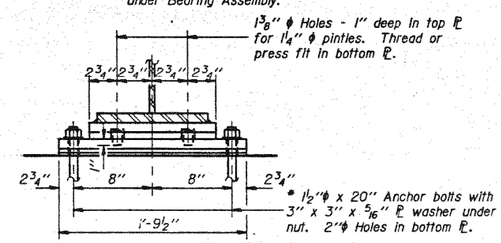

SECTION B-B

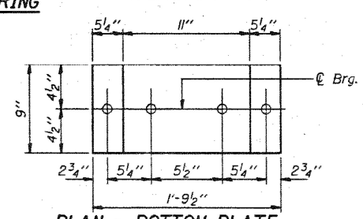

PLAN - BOTTOM PLATE

BILL OF MATERIAL

Item	Unit	Total
Elastomeric Bearing Assembly, Type I	Each	30

BEARING DETAILS
F.A. RTE. 704 SECTION 1-VBR
McLEAN COUNTY
STA. 74+41.00

DESIGNED David Burdick	EXAMINED Craig D. Kaspar, ENGINEER OF BRIDGE DESIGN	Sept. 26 19 83
CHECKED David A. McMillan	PASSED James T. Rayburn, ENGINEER OF BRIDGES AND STRUCTURES	
DRAWN RON SOMMER	APPROVED	DIRECTOR OF HIGHWAYS
CHECKED DB DKM		

I-2-EI 12-1-83

* FAI-55 & FAP 704

USER NAME = Steven.Wood	DESIGNED -	REVISED -	STATE OF ILLINOIS DEPARTMENT OF TRANSPORTATION
	DRAWN -	REVISED -	
PLOT SCALE = 40.0000 ' / in.	CHECKED -	REVISED -	
PLOT DATE = 8/9/2023	DATE -	REVISED -	

AS–BUILT PLANS
LOCATION #3 S.N. 057–0064

SCALE: NONE | SHEET 5 OF 5 SHEETS | STA. | TO STA.

F.A.* RTE.	SECTION	COUNTY	TOTAL SHEETS	SHEET NO.
*	**	MCLEAN	26	23
** D5 BRIDGE PAINTING 2024-1		CONTRACT NO. 70G12		
		ILLINOIS	FED. AID PROJECT	

MODEL: $MODEL NAMES
FILE NAME: pw:\\ildot-pw.bentley.com:PWIDOT\Documents\IDOT Offices\District 5\Projects\D570G12\CADData\CAD-Sheets\D570G12-sht-as-Builts 1 of 3

WIDTH RESTRICTION SIGNING

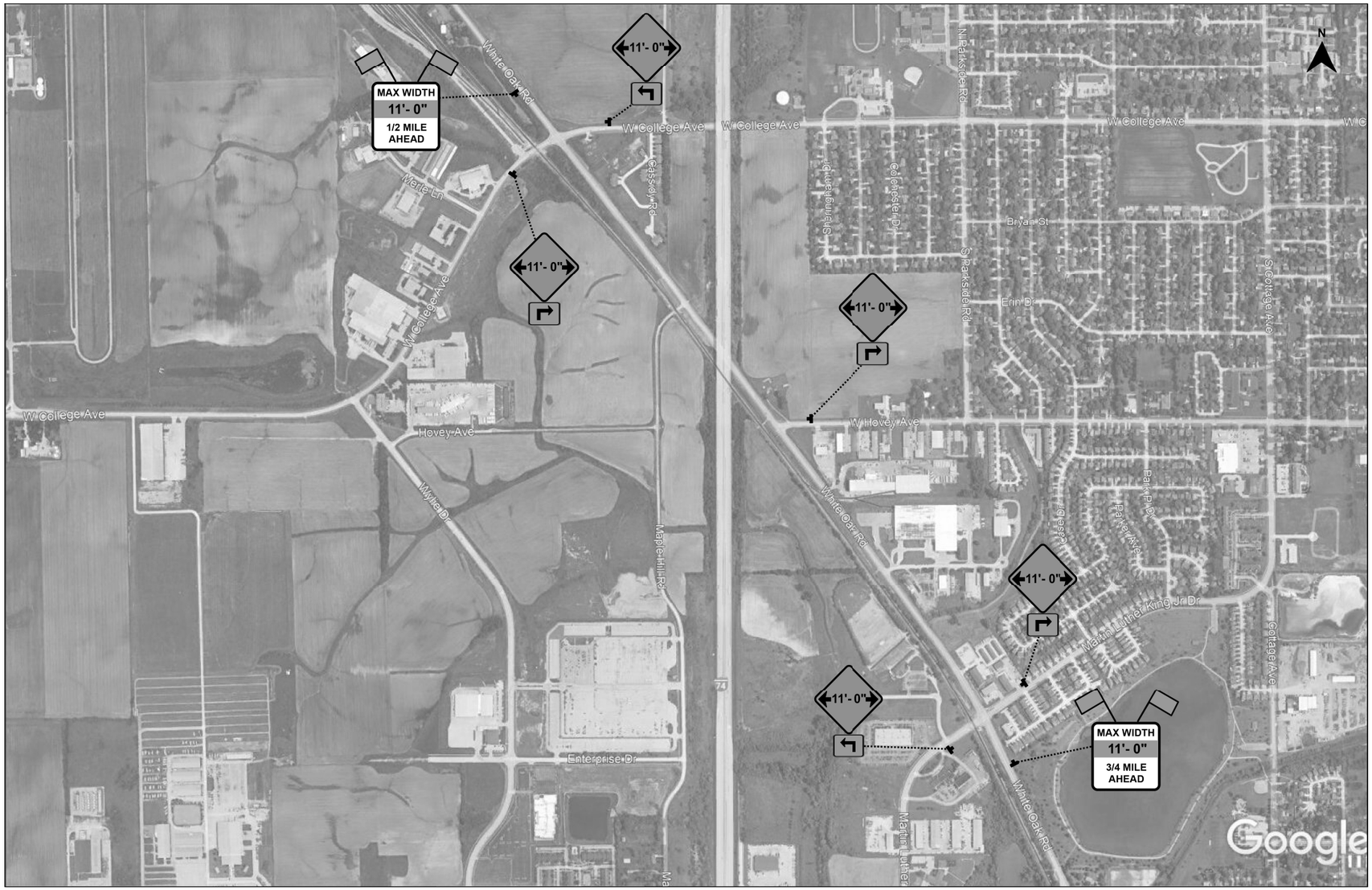

MODEL: $MODELNAMES
FILE NAME: pw:\\ildot-pw.bentley.com:PWIDOT\Documents\IDOT Offices\District 5\Projects\D570G12\CADData\CADSheets\D570G12-sht-WRS.dgn

USER NAME = Steven.Wood	DESIGNED -	REVISED -	
	DRAWN -	REVISED -	
PLOT SCALE = 40.0000 ' / in.	CHECKED -	REVISED -	
PLOT DATE = 8/9/2023	DATE -	REVISED -	

STATE OF ILLINOIS
DEPARTMENT OF TRANSPORTATION

WIDTH RESTRICTION SIGNING
LOCATION #1 & #2 OVER WHITE OAK RD.

SCALE: NONE | SHEET 1 OF 3 SHEETS | STA. TO STA.

* FAI-55 & FAP 704

F.A.* RTE.	SECTION	COUNTY	TOTAL SHEETS	SHEET NO.
*	**	MCLEAN	26	24
** D5 BRIDGE PAINTING 2024-1		CONTRACT NO. 70G12		
		ILLINOIS	FED. AID PROJECT	

WIDTH RESTRICTION SIGNING

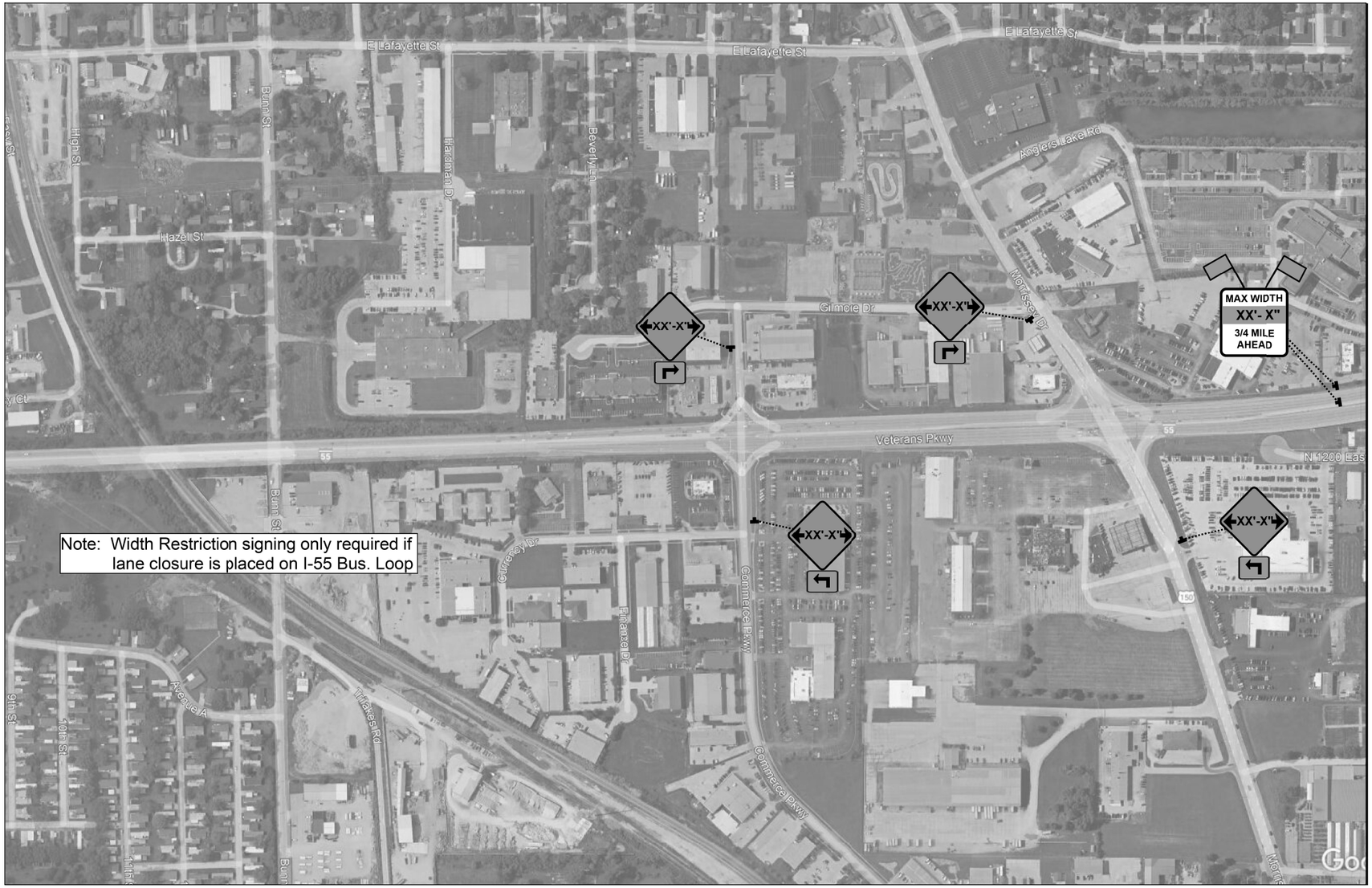

USER NAME = Steven.Wood	DESIGNED -	REVISED -	STATE OF ILLINOIS DEPARTMENT OF TRANSPORTATION
	DRAWN -	REVISED -	
PLOT SCALE = 40.0000 ' / in.	CHECKED -	REVISED -	
PLOT DATE = 8/9/2023	DATE -	REVISED -	

WIDTH RESTRICTION SIGNING
LOCATION #3 I-55 BUSN

SCALE: | SHEET 2 OF 3 SHEETS | STA. | TO STA.

F.A.* RTE.	SECTION	COUNTY	TOTAL SHEETS	SHEET NO.
*	**	MCLEAN	26	25
		CONTRACT NO. 70G12		
		ILLINOIS FED. AID PROJECT		

** D5 BRIDGE PAINTING 2024-1

MODEL: $MODEL$NAMES
FILE NAME: pw:\\ildot-pw.bentley.com:PWIDOT\Documents\IDOT Offices\District 5\Projects\D570G12\CADData\CADsheets\D570G12-sht-WRS.dgn

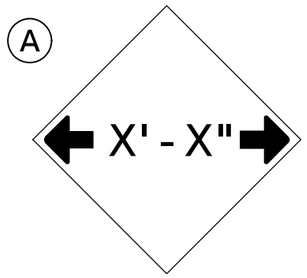

W12-2(0)-48"x48"(1200x1200)

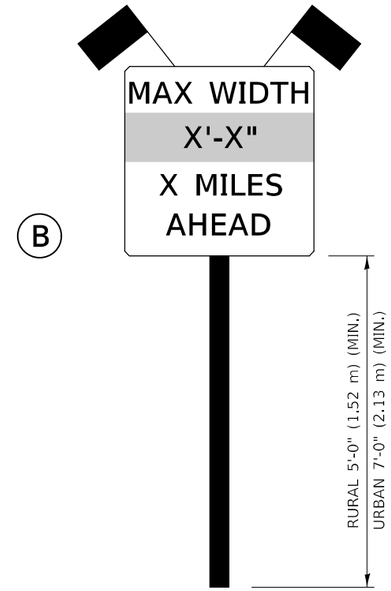

SIGN PANEL, TYPE II

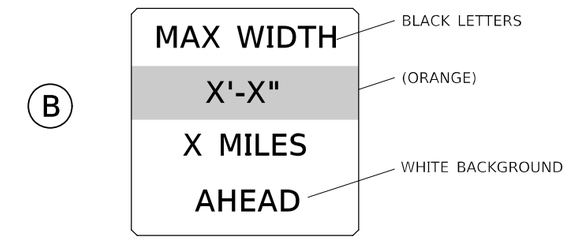

W12-I103(O)-48"x48"(1200x1200)
"D" LETTERS/NUMBERS

SIGN (A) 2 SIGNS - W12-2(O)-48"x48"(1200x1200) ARE TO BE PLACED AS SHOWN IN THE PLANS OR AS DIRECTED BY THE ENGINEER.

SIGN (B) 2 SIGNS - (SIGN PANEL, TYPE II) AS SHOWN ARE TO BE PLACED AS SHOWN IN THE PLANS OR AS DIRECTED BY THE ENGINEER.

GENERAL NOTES

1. ALL TRAFFIC CONTROL DEVICES SHALL BE FURNISHED, ERECTED AND MAINTAINED BY THE CONTRACTOR.
2. ALL (B) SIGNS SHALL HAVE FLAGS INSTALLED UNLESS OTHERWISE DIRECTED.
3. LOCATIONS OF TRAFFIC CONTROL DEVICES MAY BE ADJUSTED BY THE ENGINEER.
4. ALL TRAFFIC CONTROL SHOWN ON THIS SHEET SHALL BE PAID FOR AT THE CONTRACT LUMP SUM PRICE FOR WIDTH RESTRICTION SIGNING.
5. ALL SIGNS SHALL BE POST MOUNTED UNLESS OTHERWISE DIRECTED.
6. ALL SIGNS SHOWN ORANGE (O) SHALL BE FLUORESCENT ORANGE.
7. ALL SIGNS SHOWN SHALL CONSIST OF THE CURRENT RETROREFLECTIVE SHEETING REQUIREMENTS AS OUTLINED IN SECTION 1106.01 OF THE STANDARD SPECIFICATIONS BOOK.

Note: All dimensions are in INCHES (millimeters) unless otherwise shown.

* FAI-55 & FAP 704

DISTRICT 5 DETAIL NO. X7200201

USER NAME = Steven.Wood	DESIGNED -	REVISED -	05/08
	DRAWN -	REVISED -	10/08 KJT
PLOT SCALE = 40.0000 ' / in.	CHECKED -	REVISED -	07/09 KJT
PLOT DATE = 8/9/2023	DATE -	REVISED -	03/11 KJT

STATE OF ILLINOIS
DEPARTMENT OF TRANSPORTATION

WIDTH RESTRICTION SIGNING

SCALE: NONE | SHEET 3 OF 3 SHEETS | STA. TO STA.

F.A.* RTE.	SECTION	COUNTY	TOTAL SHEETS	SHEET NO.
*	**	MCLEAN	26	26
** D5 BRIDGE PAINTING 2024-1		CONTRACT NO. 70G12		
		ILLINOIS FED. AID PROJECT		

MODEL: $MODELNAME$
FILE NAME: pw:\\ildot-pw.bentley.com:PWIDOT\Documents\IDOT Offices\District 5\Projects\D570G12\CADData\CADsheets\D570G12-sht-WR5.dgn