RELOCATION SEQUENCE A (I-55 FIBER)

1. WORK IN THIS SEQUENCE SHALL BE COMPLETED PRIOR TO STAGE 1 TO ENSURE THAT EXISTING FIBER OPTIC CABLE IS NOT IN CONFLICT WITH THE I-80 OVER I-55 BRIDGE REMOVAL AND REPLACEMENT WORK.
2. COMPLETE INSTALLATION OF CONDUIT BETWEEN EXISTING INTERCONNECT CABINET AND FIBER HANDHOLES "A" (I-55 SB, STA 1044+23) AND "B" (I-55 SB, STA 1062+24) AS SHOWN ON ITS RELOCATION PLANS.
3. DISCONNECT EXISTING 96F [TCF] CABLE AT INTERCONNECT CABINET AND REMOVE BACK TO FIBER HANDHOLES "A" & "B". CABLE SHALL BE SALVAGED FOR REUSE.
4. RE-INSTALL 96F [TCF] BETWEEN FIBER HANDHOLES "A" & "B" AND THE INTERCONNECT CABINET UTILIZING NEW CONDUIT PATH AS SHOWN ON ITS RELOCATION PLANS.
5. SPLICE 96F [TCF] AT FIBER INTERCONNECT CABINET, INCLUDING CCTV 43A FIBER LATERAL.
6. CUT 96F [TCF] AND 96F [DCF] AT FIBER HANDHOLE "A" AND FIBER HANDHOLE "B". SPLICE 96F [TCF] TO EXISTING 96F [DCF] RUNNING SOUTH FROM HANDHOLE "A", NORTH FROM HANDHOLE "B" AND TO EXISTING DETECTOR CABINET LATERALS. IN HANDHOLE "B", SPLICE 96F [TCF] TO EXISTING LATERAL FOR CCTV 43.
7. DISCONNECT EXISTING 96F [DCF] CABLE AT INTERCONNECT CABINET AND REMOVE BACK TO FIBER HANDHOLES "A" & "B". CABLE SHALL BE SALVAGED FOR REUSE.
8. RE-INSTALL 96F [DCF] BETWEEN FIBER HANDHOLES "A" & "B" AND THE INTERCONNECT CABINET UTILIZING NEW CONDUIT PATH AS SHOWN ON ITS RELOCATION PLANS.
9. SPLICE 96F [DCF] AT FIBER INTERCONNECT CABINET. SPLICE 96F [DCF] TO EXISTING 96F [TCF] RUNNING SOUTH FROM HANDHOLE "A" AND NORTH FROM HANDHOLE "B".
10. THE SCHEDULING OF STEPS 3 - 9 SHALL BE COORDINATED WITH THE ENGINEER AND IDOT TO MINIMIZE DOWNTIME OF THE EXISTING DEVICES CONNECTED TO THE I-55 FIBER. A MINIMUM 14 DAYS NOTICE TO IDOT IS REQUIRED. FIBER OUTAGES MAY TYPICALLY BE ALLOWED SUNDAY THROUGH THURSDAY NIGHT (9PM - 5AM) OR FRIDAY/SATURDAY NIGHT (9PM - 9AM).

RELOCATION SEQUENCE B (CCTV POWER CABLE)

1. WORK IN THIS SEQUENCE SHALL BE COMPLETED PRIOR TO STAGE 1 TO ENSURE THAT EXISTING POWER CABLE IS NOT IN CONFLICT WITH THE I-80 OVER I-55 BRIDGE REMOVAL AND REPLACEMENT WORK.
2. COMPLETE INSTALLATION OF CONDUIT FOR POWER CABLE AS SHOWN ON ITS RELOCATION PLANS. ENSURE CONDUIT TAILS AT CCTV CAMERA LOCATIONS AND LIGHTING CONTROLLER ARE OF SUFFICIENT LENGTH TO COMPLETE INSTALLATION INTO EXISTING LIGHTING CONTROLLER AND CCTV CAMERA POLE FOUNDATION STRUCTURES.
3. EXPOSE EXISTING CONDUIT ENTRY INTO EXISTING LIGHTING CONTROLLER AND CCTV CAMERA POLE FOUNDATION STRUCTURES.
4. TURN OFF POWER TO CCTV CAMERA. DISCONNECT POWER CABLES AT LIGHTING CONTROLLER AND AT CCTV CAMERAS.
5. REMOVE EXISTING POWER CABLES BETWEEN LIGHTING CONTROLLER AND CCTV CAMERA.
6. CUT AND REMOVE EXISTING CONDUIT TAILS AND PULL TAILS FROM LIGHTING CONTROLLER AND CCTV CAMERA POLE STRUCTURE CONDUIT STUB OUTS.
7. INSTALL NEW CONDUIT (SEE STEP 2) INTO LIGHTING CONTROLLER AND CCTV CAMERA POLE STRUCTURE STUB OUTS.
8. INSTALL NEW POWER CABLE BETWEEN LIGHTING CONTROLLER AND CCTV CAMERAS.
9. RE-ENERGIZE CCTV CAMERA LOCATIONS.
10. THE SCHEDULING OF STEPS 4 - 9 SHALL BE COORDINATED WITH THE ENGINEER AND IDOT TO LIMIT DOWNTIME OF THE EXISTING CCTV CAMERAS TO AN 8 HOUR OVERNIGHT WINDOW (9PM TO 5 AM).

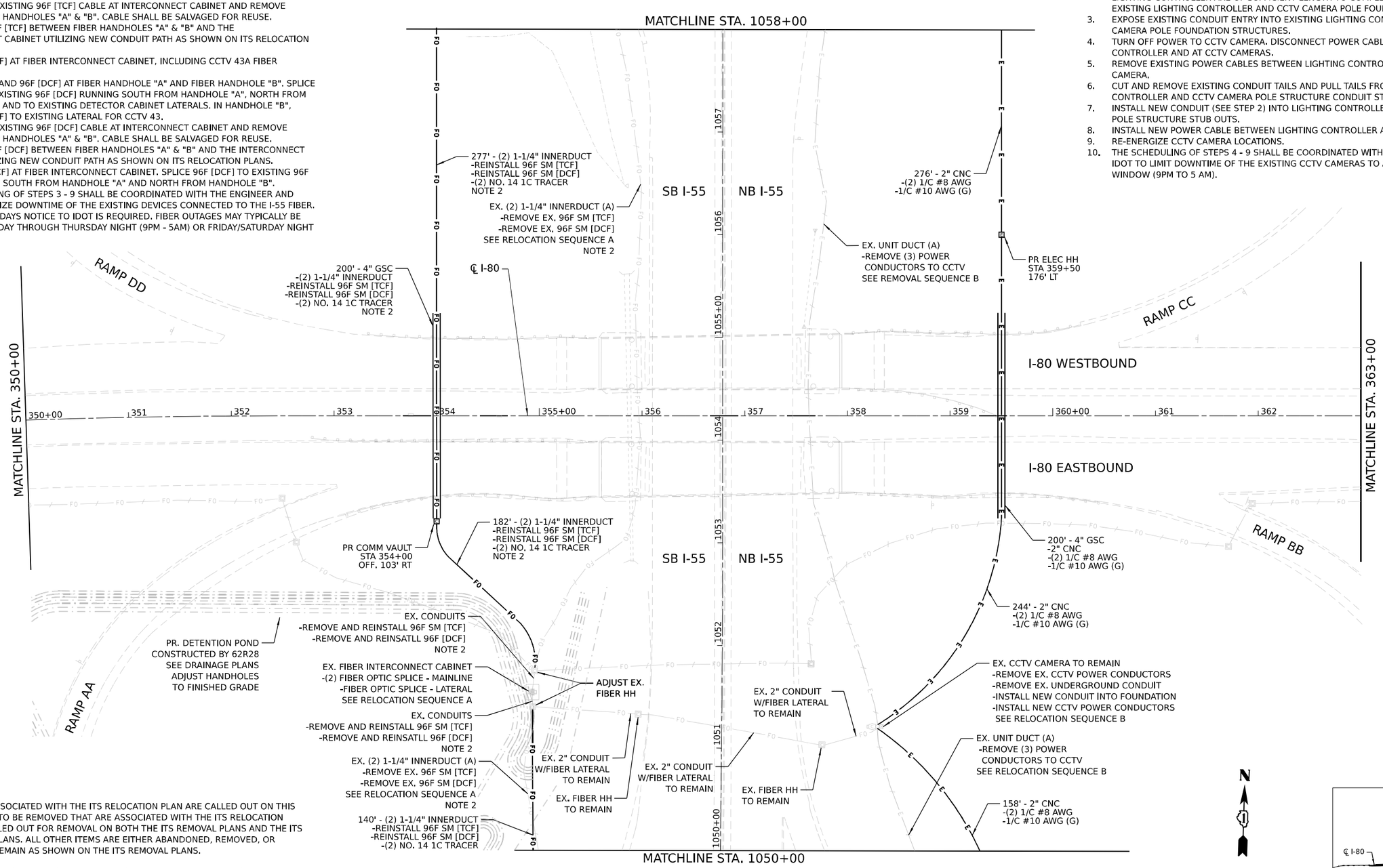

NOTES

1. ONLY ITEMS ASSOCIATED WITH THE ITS RELOCATION PLAN ARE CALLED OUT ON THIS SHEET; ITEMS TO BE REMOVED THAT ARE ASSOCIATED WITH THE ITS RELOCATION PLAN ARE CALLED OUT FOR REMOVAL ON BOTH THE ITS REMOVAL PLANS AND THE ITS RELOCATION PLANS. ALL OTHER ITEMS ARE EITHER ABANDONED, REMOVED, OR EXISTING TO REMAIN AS SHOWN ON THE ITS REMOVAL PLANS.

2. REMOVAL AND REINSTALLATION OF FIBER PAID FOR AS REMOVE AND REINSTALL FIBER OPTIC CABLE IN CONDUIT.

KEY PLAN

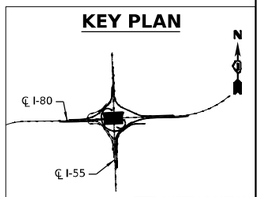

MODEL: Default
FILE NAME: pw://transystems-pw.bentley.com:transyscorp-pw1-hosted/Documents/Projects_2018/CH401/401180022/01-Stantec/CAD/ML-04 62R28/04-Sheets/07-Utilities/D162R28-sht-its-rlOc-02.dgn

TranSmart 100 S. Wacker Drive Suite 400 Chicago, Illinois 60606	USER NAME = dmeller	DESIGNED - DM	REVISED -	STATE OF ILLINOIS DEPARTMENT OF TRANSPORTATION	ITS RELOCATION PLANS
		DRAWN - DM	REVISED -		
	PLOT SCALE = 100.000 ' / In.	CHECKED - RL	REVISED -		
	PLOT DATE = 8/24/2023	DATE = 08/11/2023	REVISED -		

SCALE: 1"=50' | SHEET 2 OF 3 SHEETS | STA. 350+00 TO STA. 363+00

F.A.I. RTE.	SECTION	COUNTY	TOTAL SHEETS	SHEET NO.
I-80	FAI 80 21 STRUCTURE 7	WILL	1059	501
		CONTRACT NO. 62R28		
		ILLINOIS	FED. AID PROJECT	

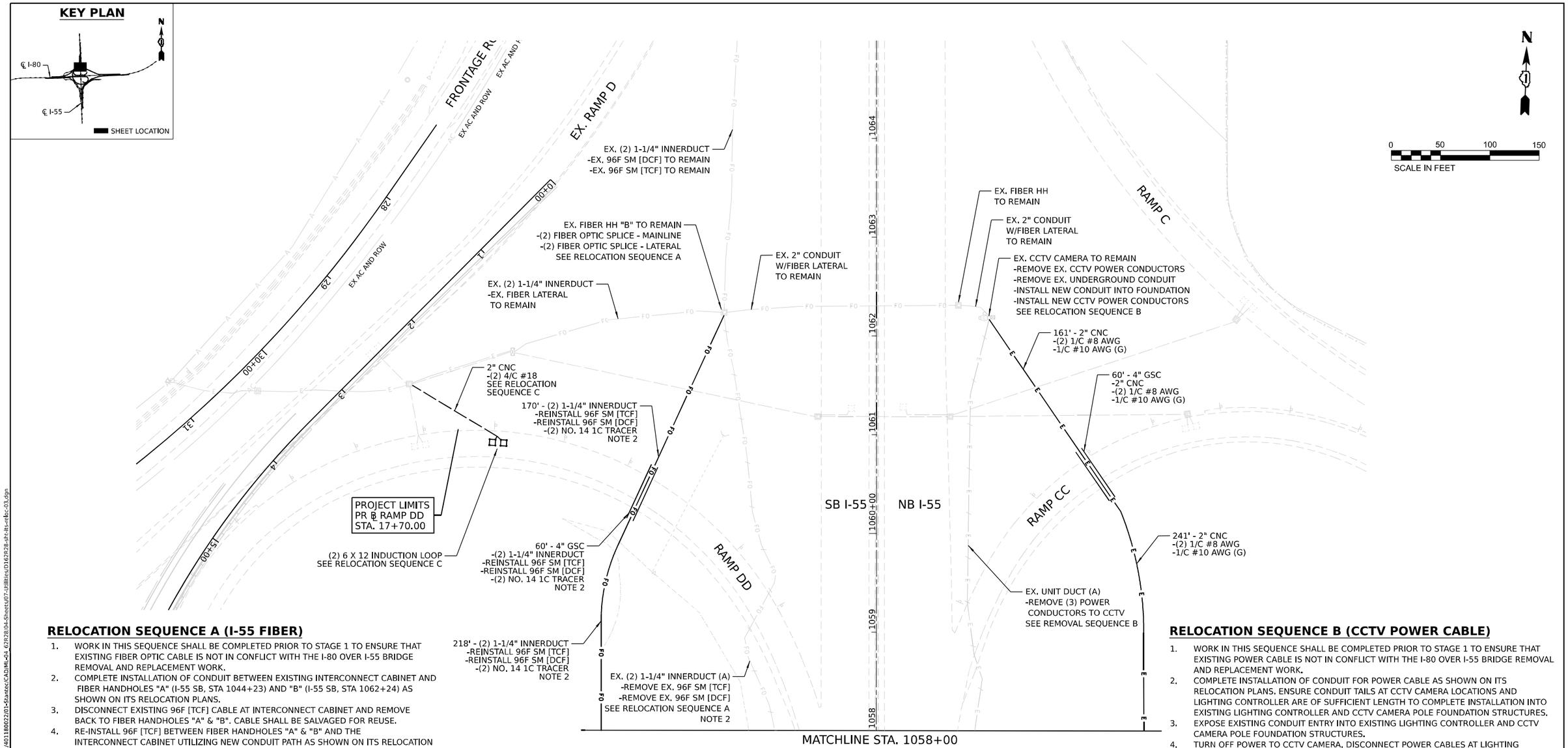

RELOCATION SEQUENCE A (I-55 FIBER)

1. WORK IN THIS SEQUENCE SHALL BE COMPLETED PRIOR TO STAGE 1 TO ENSURE THAT EXISTING FIBER OPTIC CABLE IS NOT IN CONFLICT WITH THE I-80 OVER I-55 BRIDGE REMOVAL AND REPLACEMENT WORK.
2. COMPLETE INSTALLATION OF CONDUIT BETWEEN EXISTING INTERCONNECT CABINET AND FIBER HANDHOLES "A" (I-55 SB, STA 1044+23) AND "B" (I-55 SB, STA 1062+24) AS SHOWN ON ITS RELOCATION PLANS.
3. DISCONNECT EXISTING 96F [TCF] CABLE AT INTERCONNECT CABINET AND REMOVE BACK TO FIBER HANDHOLES "A" & "B". CABLE SHALL BE SALVAGED FOR REUSE.
4. RE-INSTALL 96F [TCF] BETWEEN FIBER HANDHOLES "A" & "B" AND THE INTERCONNECT CABINET UTILIZING NEW CONDUIT PATH AS SHOWN ON ITS RELOCATION PLANS.
5. SPLICE 96F [TCF] AT FIBER INTERCONNECT CABINET, INCLUDING CCTV 43A FIBER LATERAL.
6. CUT 96F [TCF] AND 96F [DCF] AT FIBER HANDHOLE "A" AND FIBER HANDHOLE "B". SPLICE 96F [TCF] TO EXISTING 96F [DCF] RUNNING SOUTH FROM HANDHOLE "A", NORTH FROM HANDHOLE "B" AND TO EXISTING DETECTOR CABINET LATERALS. IN HANDHOLE "B", SPLICE 96F [TCF] TO EXISTING LATERAL FOR CCTV 43.
7. DISCONNECT EXISTING 96F [DCF] CABLE AT INTERCONNECT CABINET AND REMOVE BACK TO FIBER HANDHOLES "A" & "B". CABLE SHALL BE SALVAGED FOR REUSE.
8. RE-INSTALL 96F [DCF] BETWEEN FIBER HANDHOLES "A" & "B" AND THE INTERCONNECT CABINET UTILIZING NEW CONDUIT PATH AS SHOWN ON ITS RELOCATION PLANS.
9. SPLICE 96F [DCF] AT FIBER INTERCONNECT CABINET. SPLICE 96F [DCF] TO EXISTING 96F [TCF] RUNNING SOUTH FROM HANDHOLE "A" AND NORTH FROM HANDHOLE "B".
10. THE SCHEDULING OF STEPS 3 - 9 SHALL BE COORDINATED WITH THE ENGINEER AND IDOT TO MINIMIZE DOWNTIME OF THE EXISTING DEVICES CONNECTED TO THE I-55 FIBER. A MINIMUM 14 DAYS NOTICE TO IDOT IS REQUIRED. FIBER OUTAGES MAY TYPICALLY BE ALLOWED SUNDAY THROUGH THURSDAY NIGHT (9PM - 5AM) OR FRIDAY/SATURDAY NIGHT (9PM - 9AM).

NOTES

1. ONLY ITEMS ASSOCIATED WITH THE ITS RELOCATION PLAN ARE CALLED OUT ON THIS SHEET; ITEMS TO BE REMOVED THAT ARE ASSOCIATED WITH THE ITS RELOCATION PLAN ARE CALLED OUT FOR REMOVAL ON BOTH THE ITS REMOVAL PLANS AND THE ITS RELOCATION PLANS. ALL OTHER ITEMS ARE EITHER ABANDONED, REMOVED, OR EXISTING TO REMAIN AS SHOWN ON THE ITS REMOVAL PLANS.
2. REMOVAL AND REINSTALLATION OF FIBER PAID FOR AS REMOVE AND REINSTALL FIBER OPTIC CABLE IN CONDUIT.

RELOCATION SEQUENCE B (CCTV POWER CABLE)

1. WORK IN THIS SEQUENCE SHALL BE COMPLETED PRIOR TO STAGE 1 TO ENSURE THAT EXISTING POWER CABLE IS NOT IN CONFLICT WITH THE I-80 OVER I-55 BRIDGE REMOVAL AND REPLACEMENT WORK.
2. COMPLETE INSTALLATION OF CONDUIT FOR POWER CABLE AS SHOWN ON ITS RELOCATION PLANS. ENSURE CONDUIT TAILS AT CCTV CAMERA LOCATIONS AND LIGHTING CONTROLLER ARE OF SUFFICIENT LENGTH TO COMPLETE INSTALLATION INTO EXISTING LIGHTING CONTROLLER AND CCTV CAMERA POLE FOUNDATION STRUCTURES.
3. EXPOSE EXISTING CONDUIT ENTRY INTO EXISTING LIGHTING CONTROLLER AND CCTV CAMERA POLE FOUNDATION STRUCTURES.
4. TURN OFF POWER TO CCTV CAMERA, DISCONNECT POWER CABLES AT LIGHTING CONTROLLER AND AT CCTV CAMERAS.
5. REMOVE EXISTING POWER CABLES BETWEEN LIGHTING CONTROLLER AND CCTV CAMERA.
6. CUT AND REMOVE EXISTING CONDUIT TAILS AND PULL TAILS FROM LIGHTING CONTROLLER AND CCTV CAMERA POLE STRUCTURE CONDUIT STUB OUTS.
7. INSTALL NEW CONDUIT (SEE STEP 2) INTO LIGHTING CONTROLLER AND CCTV CAMERA POLE STRUCTURE STUB OUTS.
8. INSTALL NEW POWER CABLE BETWEEN LIGHTING CONTROLLER AND CCTV CAMERAS.
9. RE-ENERGIZE CCTV CAMERA LOCATIONS.
10. THE SCHEDULING OF STEPS 4 - 9 SHALL BE COORDINATED WITH THE ENGINEER AND IDOT TO LIMIT DOWNTIME OF THE EXISTING CCTV CAMERAS TO AN 8 HOUR OVERNIGHT WINDOW (9PM TO 5 AM).

RELOCATION SEQUENCE C (RAMP DD LOOPS)

1. EXISTING RAMP DD DETECTION SHALL BE MAINTAINED UNTIL TRAFFIC IS SHIFTED FROM EXISTING PAVEMENT. INSTALL NEW DETECTION LOOPS AS SHOWN ON PLANS.

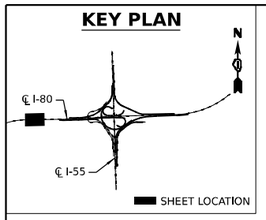

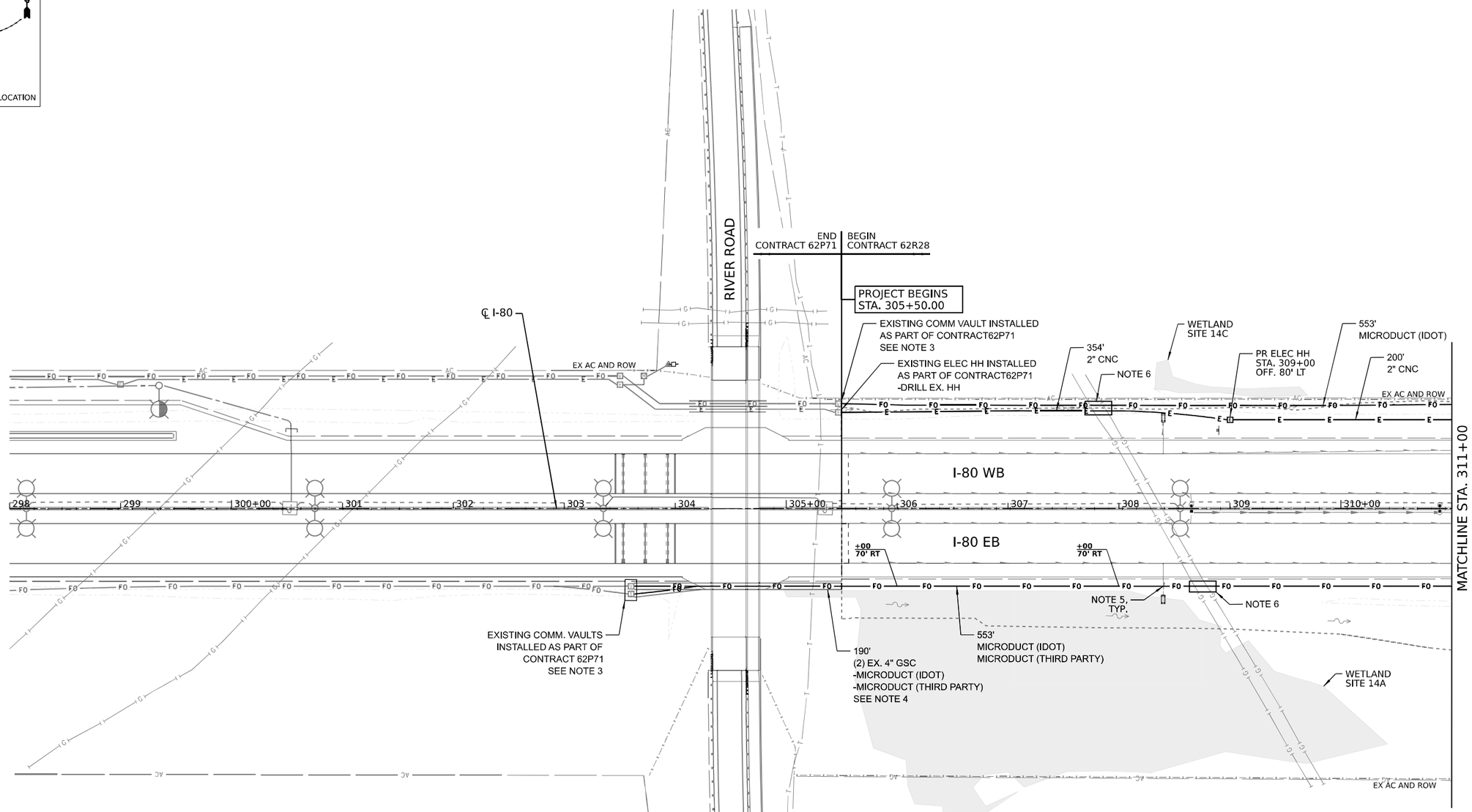

NOTES:

1. IDOT MICRODUCT SHALL ONLY ENTER IDOT COMMUNICATIONS VAULTS.
2. THIRD PARTY MICRODUCT SHALL ONLY ENTER THIRD PARTY COMMUNICATIONS VAULTS.
3. CONDUIT SHALL ENTER THE EXISTING VAULT FROM THE UNDERSIDE OF THE VAULT. NO DRILLING SHALL BE ALLOWED.
4. INSTALL MICRODUCT(S) INSIDE EXISTING 4" GSC INSTALLED BY OTHERS AS PART OF THE 62P71 CONTRACT. THE MICRODUCTS SHALL BE PULLED INTO THE APPROPRIATE COMMUNICATIONS VAULTS WHICH WERE INSTALLED AS PART OF THE 62P71 CONTRACT.
5. COORDINATE INSTALLATION WITH DRAINAGE. MAINTAIN MINIMUM 18" CLEARANCE BETWEEN ITS MICRODUCT/CONDUIT AND DRAINAGE PIPES/STRUCTURES/UNDERDRAIN, TYP.
6. INSTALL ITS MICRODUCT/CONDUIT WITH A MINIMUM CLEARANCE TO GAS LINE AS SPECIFIED BY THE UTILITY.

N

0 50 100 150
SCALE IN FEET

MODEL: Default
FILE NAME: pw://transystems-pw.bentley.com:transyscorp-pw1-hosted/Documents/Projects_2018/C-M401/401180022/01-Sianticc/CAD/ML-04_62R28/04-Sheets/07-Utilities/D162R28-ITS-IT-01.dgn

TranSmart
100 S. Wacker Drive Suite 400
Chicago, Illinois 60606

USER NAME = dmeler	DESIGNED - DM	REVISED -	
	DRAWN - JM	REVISED -	
PLOT SCALE = 100.000 ' / In.	CHECKED - RL	REVISED -	
PLOT DATE = 8/9/2023	DATE - 08/11/2023	REVISED -	

STATE OF ILLINOIS
DEPARTMENT OF TRANSPORTATION

ITS INFRASTRUCTURE PLANS

SCALE: 1"=50' | SHEET 1 OF 9 SHEETS | STA. 305+50 TO STA. 311+00

F.A.I. RTE.	SECTION	COUNTY	TOTAL SHEETS	SHEET NO.
I-80	FAI 80 21 STRUCTURE 7	WILL	1059	503
		CONTRACT NO. 62R28		
	ILLINOIS	FED. AID PROJECT		

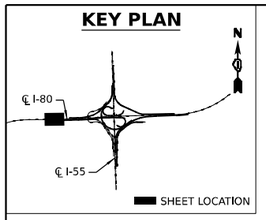

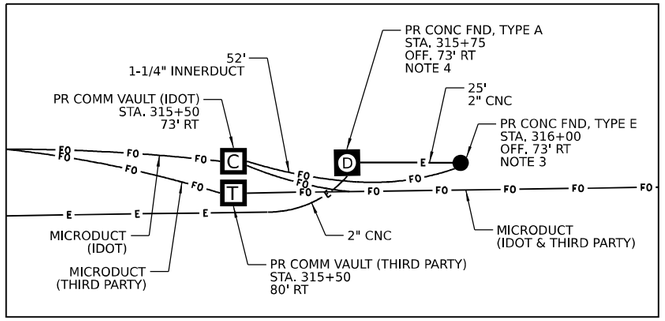

DETAIL A

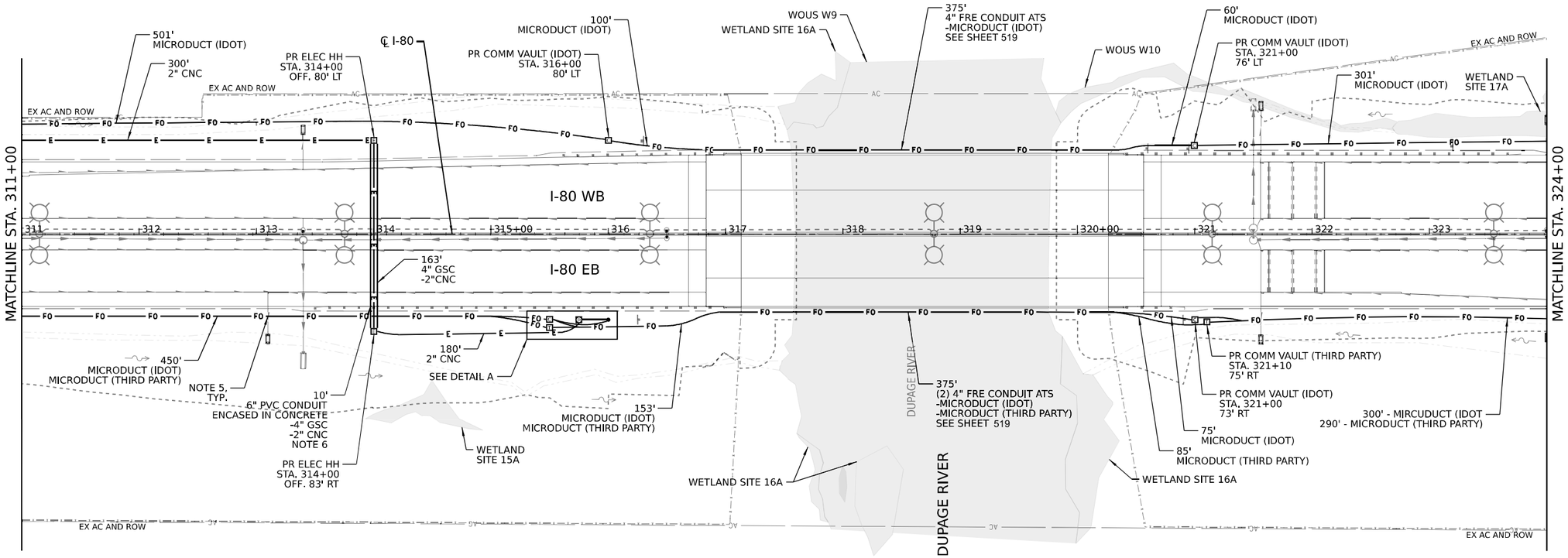

NOTES:

1. IDOT MICRODUCT SHALL ONLY ENTER IDOT COMMUNICATIONS VAULTS.
2. THIRD PARTY MICRODUCT SHALL ONLY ENTER THIRD PARTY COMMUNICATIONS VAULTS.
3. 2" CNC CONDUIT SHALL BE COUPLED TO 2" CONCRETE FOUNDATION STUB OUT. 1-1/4" INNERDUCT SHALL BE INSTALLED IN THE OTHER 2" CONCRETE FOUNDATION STUB OUT UP THROUGH THE TOP OF THE FOUNDATION.
4. THE 2" CNC CONDUITS SHALL BE COUPLED TO 2" CONCRETE FOUNDATION STUB OUTS.
5. COORDINATE INSTALLATION WITH DRAINAGE. MAINTAIN MINIMUM 18" CLEARANCE BETWEEN ITS MICRODUCT/CONDUIT AND DRAINAGE PIPES/STRUCTURES/UNDERDRAIN, TYP.
6. COORDINATE INSTALLATION WITH GUARDRAIL. CENTER THE WIDTH OF THE PVC CONDUIT ENCASED IN CONCRETE BETWEEN GUARDRAIL POSTS AND LENGTHWISE ON THE GUARDRAIL.

N

0 50 100 150
SCALE IN FEET

MODEL: Default
FILE NAME: pw://transystem-pw.bentley.com:transyscorp-pw1-hosted/Documents/Projects_2018/CH401/401180022/01-Sbantec/CAD/ML-04_62R28/04-Sheets/07-Utilities/D162R28-ITS-IT-02.dgn

TranSmart
100 S. Wacker Drive Suite 400
Chicago, Illinois 60606

USER NAME = dmeller	DESIGNED - DM	REVISED -	
	DRAWN - JM	REVISED -	
PLOT SCALE = 100.000 ' / In.	CHECKED - RL	REVISED -	
PLOT DATE = 8/9/2023	DATE = 08/11/2023	REVISED -	

STATE OF ILLINOIS
DEPARTMENT OF TRANSPORTATION

ITS INFRASTRUCTURE PLANS

SCALE: 1"=50' | SHEET 2 OF 9 SHEETS | STA. 311+00 TO STA. 324+00

F.A.I. RTE.	SECTION	COUNTY	TOTAL SHEETS	SHEET NO.
I-80	FAI 80 21 STRUCTURE 7	WILL	1059	504
		CONTRACT NO. 62R28		
		ILLINOIS	FED. AID PROJECT	

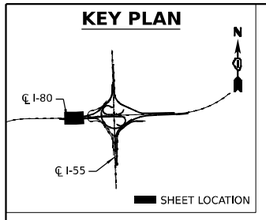

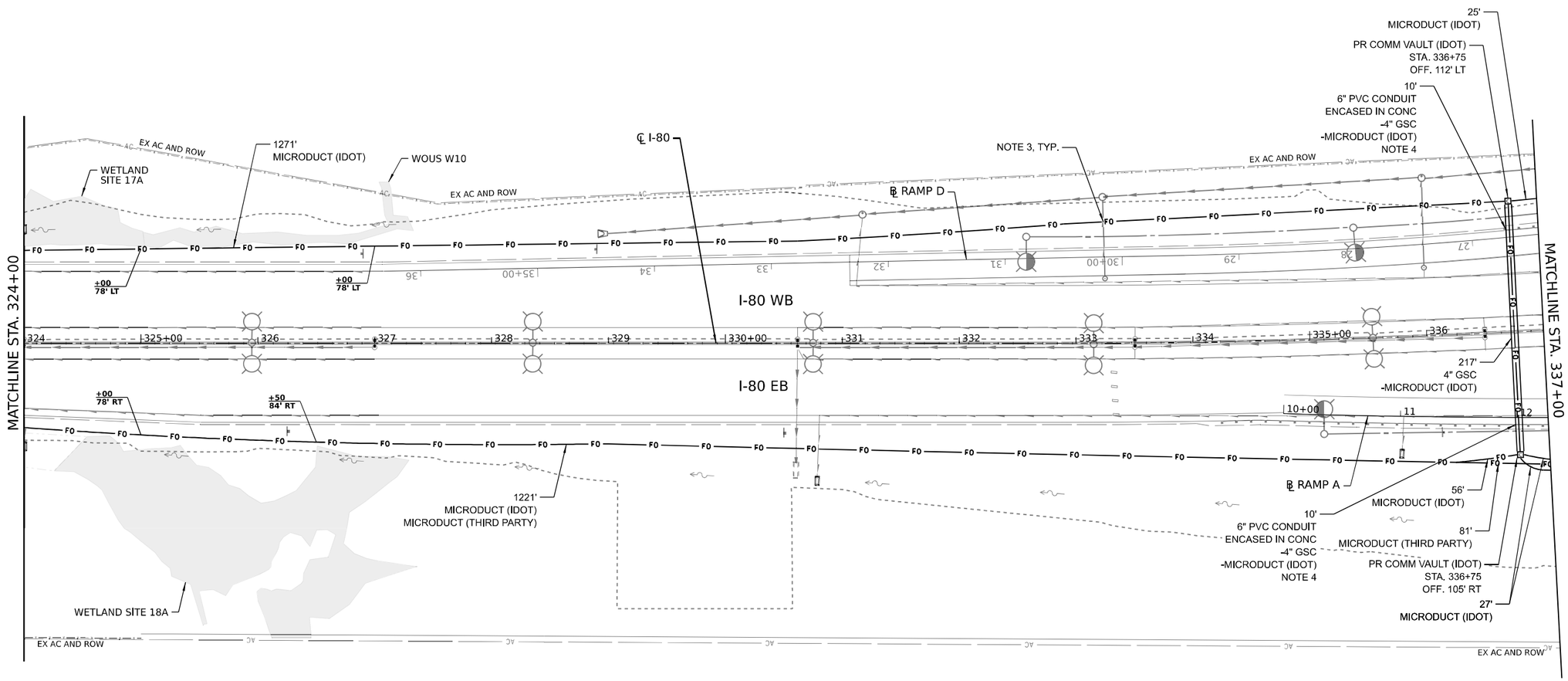

NOTES:

1. IDOT MICRODUCT SHALL ONLY ENTER IDOT COMMUNICATIONS VAULTS.
2. THIRD PARTY MICRODUCT SHALL ONLY ENTER THIRD PARTY COMMUNICATIONS VAULTS.
3. COORDINATE INSTALLATION WITH DRAINAGE. MAINTAIN MINIMUM 18" CLEARANCE BETWEEN ITS MICRODUCT/CONDUIT AND DRAINAGE PIPES/STRUCTURES/UNDERDRAIN, TYP.
4. COORDINATE INSTALLATION WITH GUARDRAIL. CENTER THE WIDTH OF THE PVC CONDUIT ENCASED IN CONCRETE BETWEEN GUARDRAIL POSTS AND LENGTHWISE ON THE GUARDRAIL.

N

0 50 100 150
SCALE IN FEET

MODEL: Default
FILE NAME: pw://transystems-pw.bentley.com:transyscorp-pw1-hosted/Documents/Projects_2018/CH401/401180022/01-Siantec/CAD/ML-01 62R28/04-Sheets/07-Utilities/D162R28-sht-its-03.dgn

TranSmart
100 S. Wacker Drive Suite 400
Chicago, Illinois 60606

USER NAME = dmeier	DESIGNED - DM	REVISED -	
	DRAWN - JM	REVISED -	
PLOT SCALE = 100.000 ' / In.	CHECKED - RL	REVISED -	
PLOT DATE = 8/9/2023	DATE - 08/11/2023	REVISED -	

STATE OF ILLINOIS
DEPARTMENT OF TRANSPORTATION

ITS INFRASTRUCTURE PLANS

SCALE: 1"=50' | SHEET 3 OF 9 SHEETS | STA. 324+00 TO STA. 337+00

F.A.I. RTE.	SECTION	COUNTY	TOTAL SHEETS	SHEET NO.
I-80	FAI 80 21 STRUCTURE 7	WILL	1059	505
		CONTRACT NO. 62R28		
		ILLINOIS	FED. AID PROJECT	

KEY PLAN

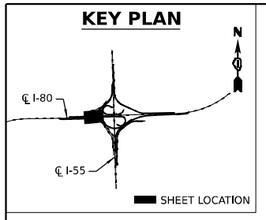

NOTES:

1. IDOT MICRODUCT SHALL ONLY ENTER IDOT COMMUNICATIONS VAULTS.
2. THIRD PARTY MICRODUCT SHALL ONLY ENTER THIRD PARTY COMMUNICATIONS VAULTS.
3. 2" CNC CONDUIT SHALL BE COUPLED TO 2" CONCRETE FOUNDATION STUB OUT. 1-1/4" INNERDUCT SHALL BE INSTALLED IN THE OTHER 2" CONCRETE FOUNDATION STUB OUT UP THROUGH THE TOP OF THE FOUNDATION.
4. EXISTING UTILITY POLE MAY BE RELOCATED DUE TO CONSTRUCTION OF NOISE WALL ALONG THE ROW. COORDINATE ELECTRIC SERVICE INSTALLATION WITH UTILITY AND THE ENGINEER.
5. COORDINATE INSTALLATION WITH DRAINAGE. MAINTAIN MINIMUM 18" CLEARANCE BETWEEN ITS MICRODUCT/CONDUIT AND DRAINAGE PIPES/STRUCTURES/UNDERDRAIN, TYP.
6. COORDINATE INSTALLATION WITH GUARDRAIL. CENTER THE WIDTH OF THE PVC CONDUIT ENCASED IN CONCRETE BETWEEN GUARDRAIL POSTS AND LENGTHWISE ON THE GUARDRAIL.

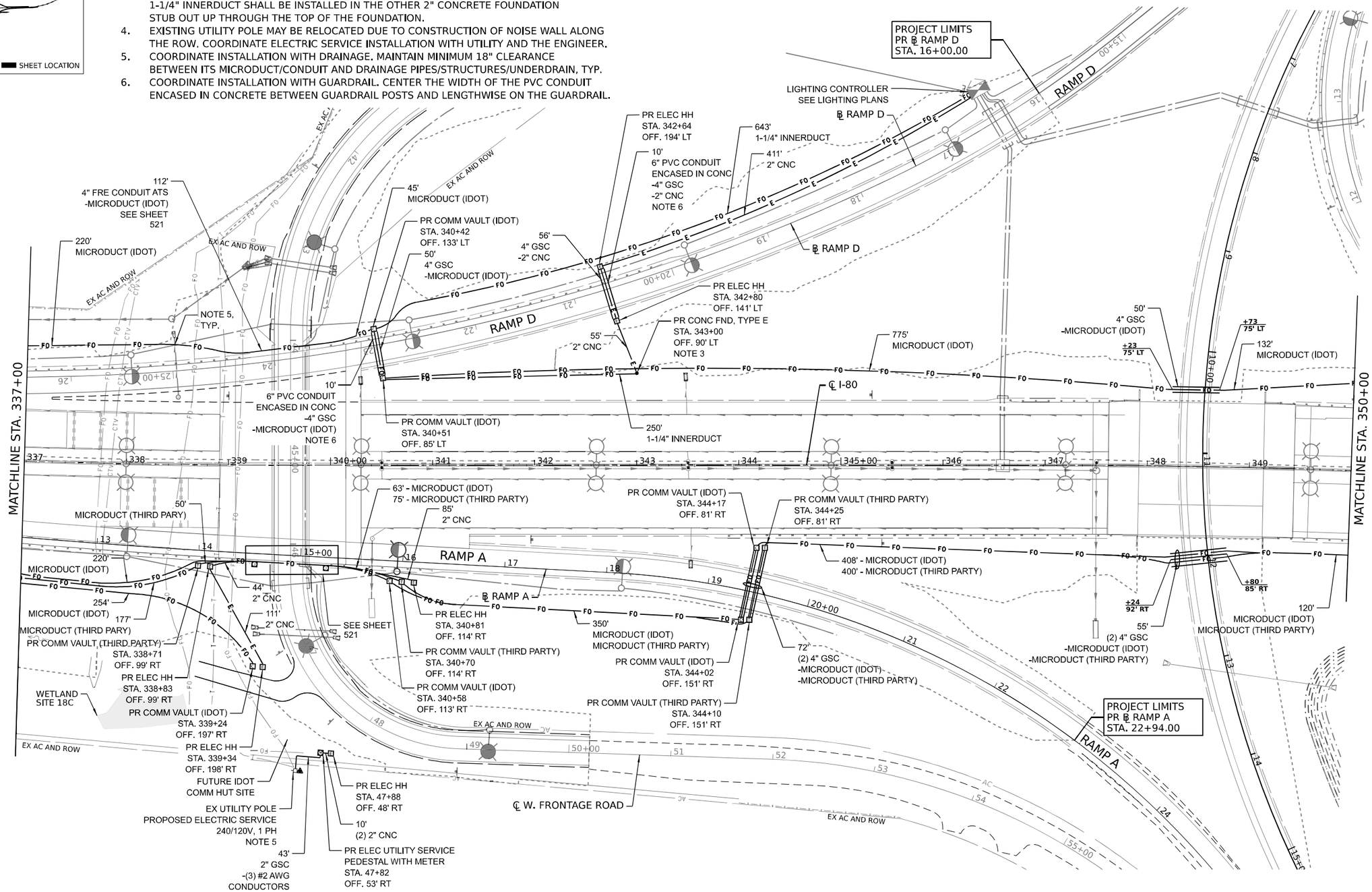

TranSmart 100 S. Wacker Drive Suite 400 Chicago, Illinois 60606	USER NAME = dmeller	DESIGNED DM	REVISED -	STATE OF ILLINOIS DEPARTMENT OF TRANSPORTATION	ITS INFRASTRUCTURE PLANS	F.A.I. RTE.	SECTION	COUNTY	TOTAL SHEETS / SHEET NO.
		DRAWN JM	REVISED -			I-80	FAI 80 21 STRUCTURE 7	WILL	1059 / 506
	PLOT SCALE = 100.000 ' / In.	CHECKED RL	REVISED -					CONTRACT NO. 62R28	
	PLOT DATE = 8/9/2023	DATE 08/11/2023	REVISED -		SCALE: 1"=50' SHEET 4 OF 9 SHEETS STA. 337+00 TO STA. 350+00		ILLINOIS	FED. AID PROJECT	

MODEL: Default
FILE NAME: pw://transystems-pw.bentley.com:transyscorp-pw1-hosted/Documents/Projects_2018/CH401/401180022/01-Stantec/CAD/ML-04 62R28-04-Sheets/07-Utilities/D162R28-sht-its-04.dgn

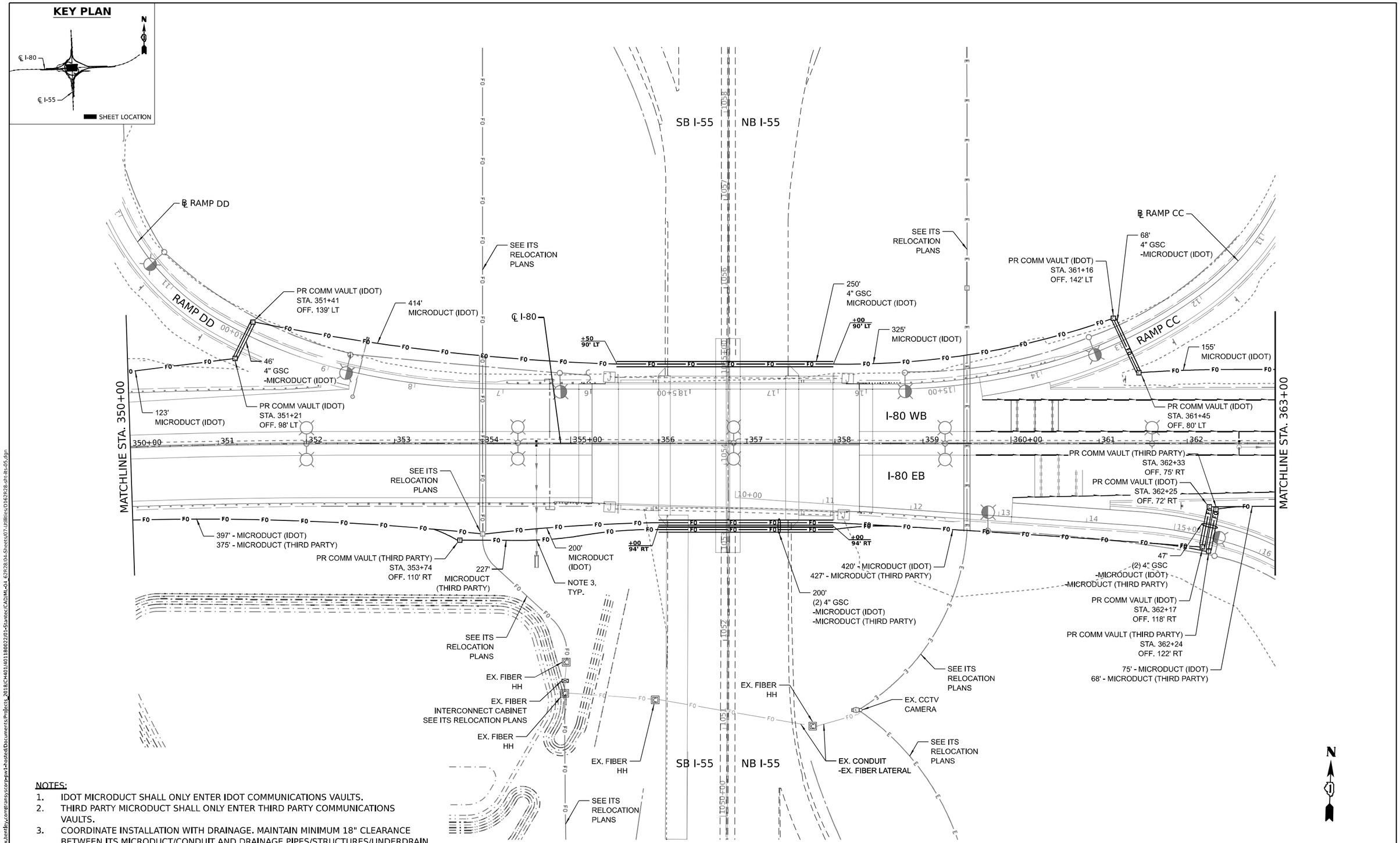

NOTES:

1. IDOT MICRODUCT SHALL ONLY ENTER IDOT COMMUNICATIONS VAULTS.
2. THIRD PARTY MICRODUCT SHALL ONLY ENTER THIRD PARTY COMMUNICATIONS VAULTS.
3. COORDINATE INSTALLATION WITH DRAINAGE. MAINTAIN MINIMUM 18" CLEARANCE BETWEEN ITS MICRODUCT/CONDUIT AND DRAINAGE PIPES/STRUCTURES/UNDERDRAIN, TYP.

MODEL: Default
FILE NAME: pw://transystems-pw.bentley.com:transyscorp-pw1-hosted/Documents/Projects_2018/CH401/401180022/01-Stantec/CAD/M-04 62R28/04-Sheets/07-Utilities/D162R28-sh-its-05.dgn

TranSmart
100 S. Wacker Drive Suite 400
Chicago, Illinois 60606

USER NAME = dmeller	DESIGNED - DM	REVISED -	
	DRAWN - JM	REVISED -	
PLOT SCALE = 100.000 ' / In.	CHECKED - RL	REVISED -	
PLOT DATE = 8/9/2023	DATE = 08/11/2023	REVISED -	

STATE OF ILLINOIS
DEPARTMENT OF TRANSPORTATION

ITS INFRASTRUCTURE PLANS

SCALE: 1"=50' | SHEET 5 OF 9 SHEETS | STA. 350+00 TO STA. 363+00

F.A.I. RTE.	SECTION	COUNTY	TOTAL SHEETS	SHEET NO.
I-80	FAI 80 21 STRUCTURE 7	WILL	1059	507
		CONTRACT NO. 62R28		
		ILLINOIS	FED. AID PROJECT	

KEY PLAN

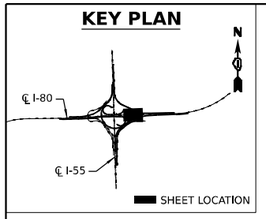

NOTES:

1. IDOT MICRODUCT SHALL ONLY ENTER IDOT COMMUNICATIONS VAULTS.
2. THIRD PARTY MICRODUCT SHALL ONLY ENTER THIRD PARTY COMMUNICATIONS VAULTS.
3. 2" CNC CONDUIT SHALL BE COUPLED TO 2" CONCRETE FOUNDATION STUB OUT. 1-1/4" INNERDUCT SHALL BE INSTALLED IN THE OTHER 2" CONCRETE FOUNDATION STUB OUT UP THROUGH THE TOP OF THE FOUNDATION.
4. THE 2" CNC CONDUITS SHALL BE COUPLED TO 2" CONCRETE FOUNDATION STUB OUTS.
5. COORDINATE WORK AT RAMP B AND FRONTAGE ROAD WITH CONTRACT 62R26.
6. COORDINATE INSTALLATION WITH DRAINAGE. MAINTAIN MINIMUM 18" CLEARANCE BETWEEN ITS MICRODUCT/CONDUIT AND DRAINAGE PIPES/STRUCTURES/UNDERDRAIN, TYP.

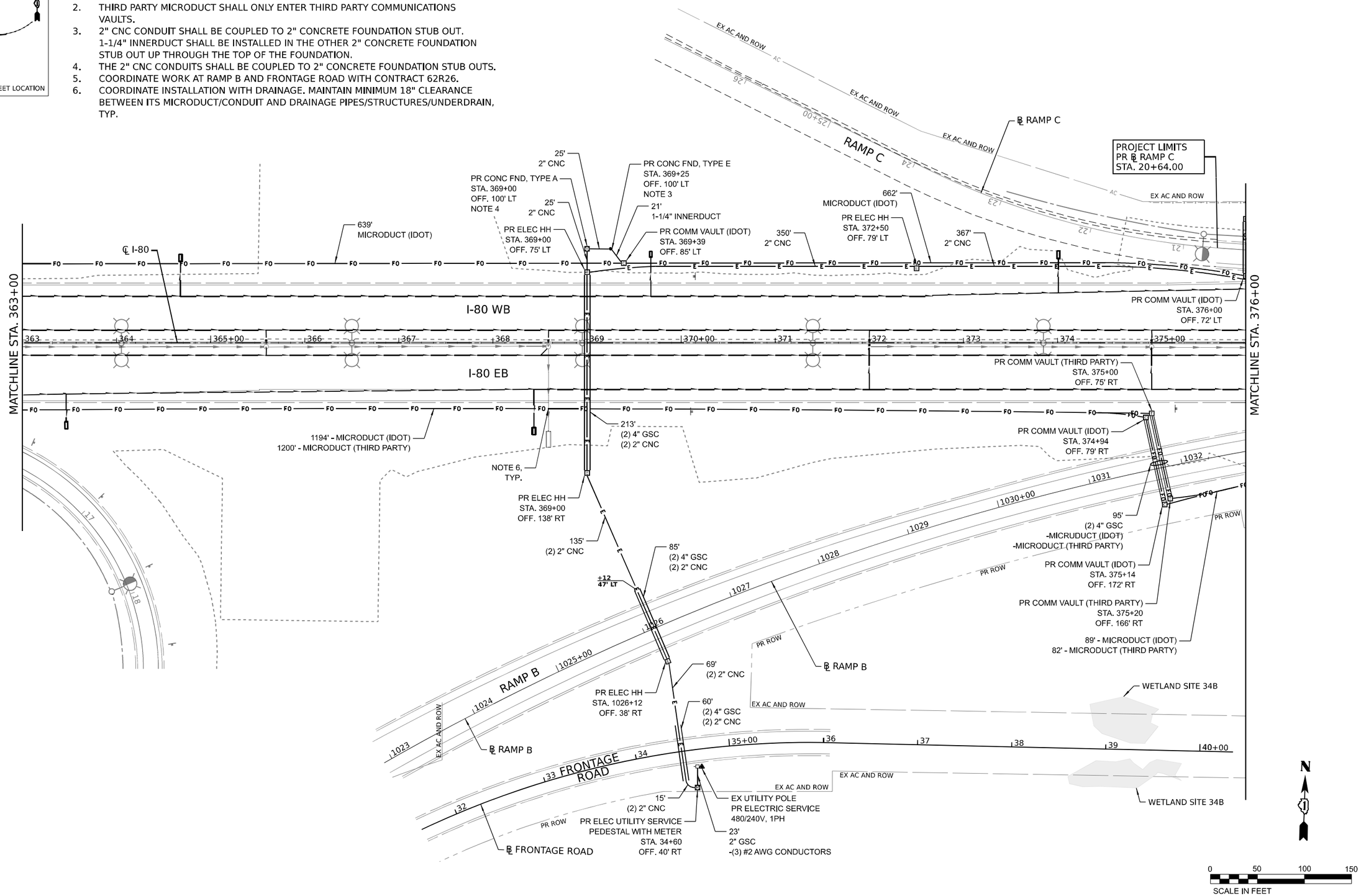

MODEL: Default
FILE NAME: pw://transystems-pw.bentley.com:transyscorp-pw1-hosted/Documents/Projects_2018/CH401/401180022/01-Stantec/CAD/ML-04_62R28/04-Sheets/07-Utilities/D162R28-sht-ut-06.dgn

TranSmart 100 S. Wacker Drive Suite 400 Chicago, Illinois 60606	USER NAME = dmeller	DESIGNED - DM	REVISED -	STATE OF ILLINOIS DEPARTMENT OF TRANSPORTATION	ITS INFRASTRUCTURE PLANS			F.A.I. RTE.	SECTION	COUNTY	TOTAL SHEETS / SHEET NO.
		DRAWN - JM	REVISED -					I-80	FAI 80 21 STRUCTURE 7	WILL	1059 / 508
	PLOT SCALE = 100.000 ' / In.	CHECKED - RL	REVISED -							CONTRACT NO. 62R28	
	PLOT DATE = 8/9/2023	DATE = 08/11/2023	REVISED -		SCALE: 1"=50'	SHEET 6 OF 9 SHEETS	STA. 363+00 TO STA. 376+00			ILLINOIS FED. AID PROJECT	

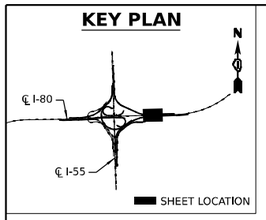

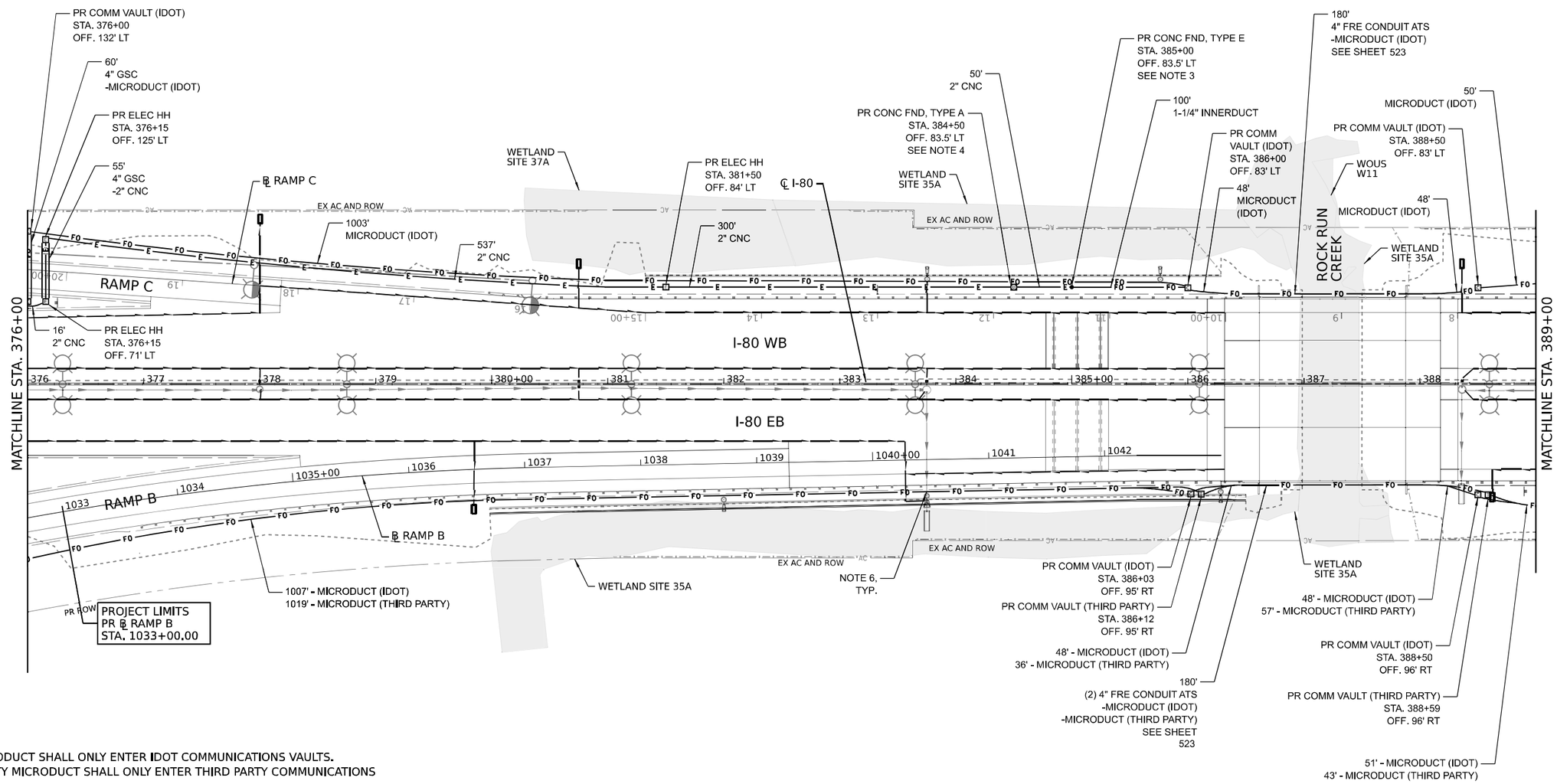

NOTES:

1. IDOT MICRODUCT SHALL ONLY ENTER IDOT COMMUNICATIONS VAULTS.
2. THIRD PARTY MICRODUCT SHALL ONLY ENTER THIRD PARTY COMMUNICATIONS VAULTS.
3. 2" CNC CONDUIT SHALL BE COUPLED TO 2" CONCRETE FOUNDATION STUB OUT. 1-1/4" INNERDUCT SHALL BE INSTALLED IN THE OTHER 2" CONCRETE FOUNDATION STUB OUT UP THROUGH THE TOP OF THE FOUNDATION.
4. THE 2" CNC CONDUITS SHALL BE COUPLED TO 2" CONCRETE FOUNDATION STUB OUTS.
5. COORDINATE WORK AT RAMP B WITH CONTRACT 62R26.
6. COORDINATE INSTALLATION WITH DRAINAGE. MAINTAIN MINIMUM 18" CLEARANCE BETWEEN ITS MICRODUCT/CONDUIT AND DRAINAGE PIPES/STRUCTURES/UNDERDRAIN, TYP.

MODEL: Default
FILE NAME: pw://transystem-pw.bentley.com:transyscorp-pw1-hosted/Documents/Projects_2018/CH401/401180022/01-Sianteo/CAD/ML-04_62R28/04-Sheets/07-Utilities/D162R28-ITS-07.dgn

TranSmart
100 S. Wacker Drive Suite 400
Chicago, Illinois 60606

USER NAME = dmeller	DESIGNED - DM	REVISED -	
	DRAWN - JM	REVISED -	
PLOT SCALE = 100.000 ' / In.	CHECKED - RL	REVISED -	
PLOT DATE = 8/9/2023	DATE - 08/11/2023	REVISED -	

STATE OF ILLINOIS
DEPARTMENT OF TRANSPORTATION

ITS INFRASTRUCTURE PLANS

SCALE: 1"=50' | SHEET 7 OF 9 SHEETS | STA. 376+00 TO STA. 389+00

F.A.I. RTE.	SECTION	COUNTY	TOTAL SHEETS	SHEET NO.
I-80	FAI 80 21 STRUCTURE 7	WILL	1059	509
		CONTRACT NO. 62R28		
		ILLINOIS	FED. AID PROJECT	

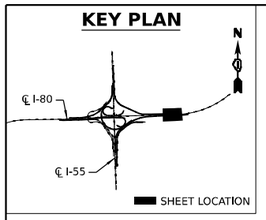

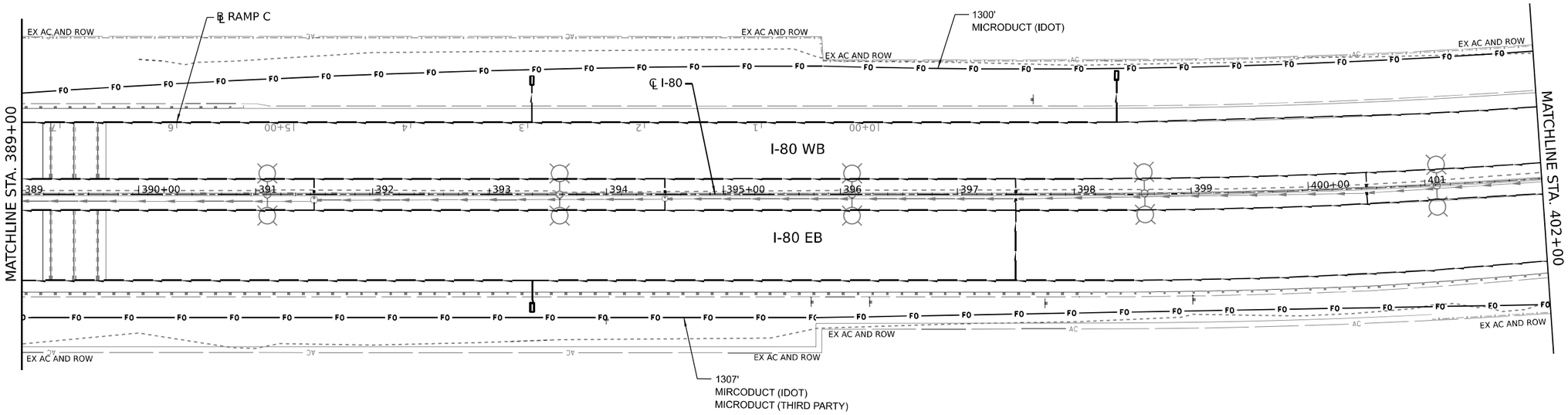

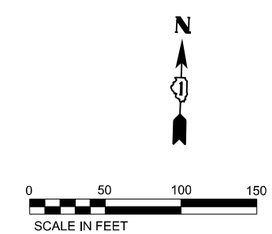

MODEL: Default
FILE NAME: pw://transystem-pw.bentley.com:transyscorp-pw1-hosted/Documents/Projects_2018/CH401/401180022/01-Sbantec/CAD/ML-04_62R28/04-Sheets/07-Utilities/D162R28-sht-its-08.dgn

TranSmart 100 S. Wacker Drive Suite 400 Chicago, Illinois 60606	USER NAME = dmeller	DESIGNED - DM	REVISED -	STATE OF ILLINOIS DEPARTMENT OF TRANSPORTATION	ITS INFRASTRUCTURE PLANS				F.A.I. RTE.	SECTION	COUNTY	TOTAL SHEETS	SHEET NO.
		DRAWN - JM	REVISED -						I-80	FAI 80 21 STRUCTURE 7	WILL	1059	510
	PLOT SCALE = 100.000 ' / In.	CHECKED - RL	REVISED -								CONTRACT NO. 62R28		
	PLOT DATE = 8/9/2023	DATE - 08/11/2023	REVISED -		SCALE: 1"=50'	SHEET 8 OF 9 SHEETS	STA. 389+00	TO STA. 402+00		ILLINOIS	FED. AID PROJECT		

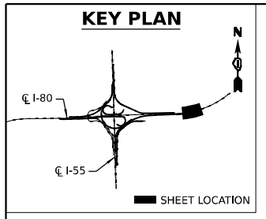

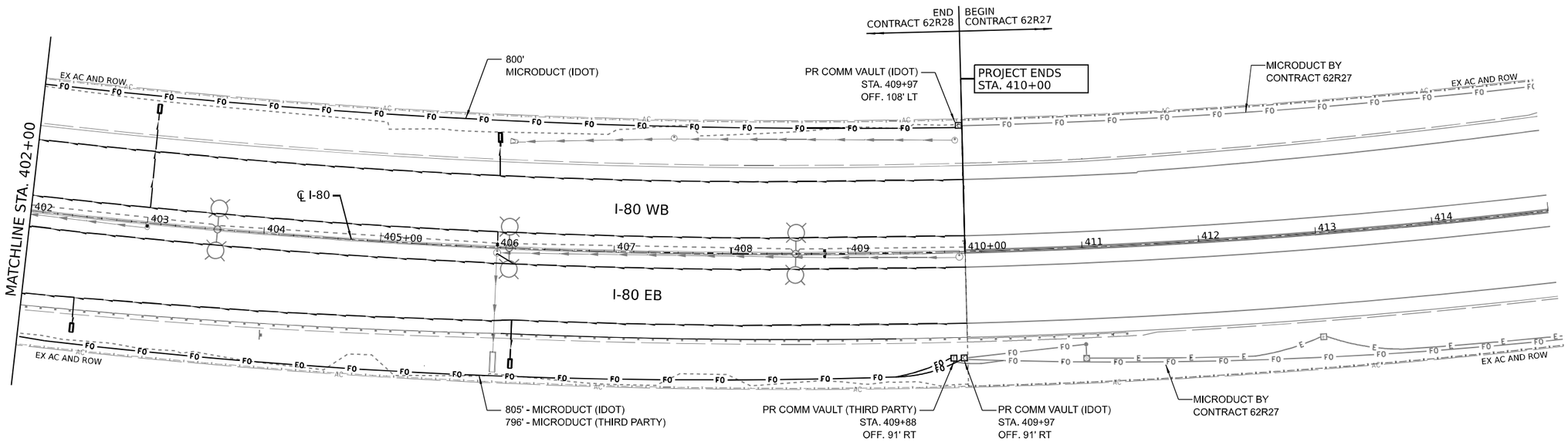

NOTES:

1. IDOT MICRODUCT SHALL ONLY ENTER IDOT COMMUNICATIONS VAULTS.
2. THIRD PARTY MICRODUCT SHALL ONLY ENTER THIRD PARTY COMMUNICATIONS VAULTS.

N

0 50 100 150
SCALE IN FEET

MODEL: Default
FILE NAME: pw://transystems-pw.bentley.com:transyscorp-pw1-hosted/Documents/Projects_2018/CH401/401180022/01-Stantec/CAD/ML-04 62R28/04-Sheets/07-Utilities/D162R28-sht-its-09.dgn

TranSmart
100 S. Wacker Drive Suite 400
Chicago, Illinois 60606

USER NAME = dmeller	DESIGNED - DM	REVISED -	STATE OF ILLINOIS DEPARTMENT OF TRANSPORTATION	ITS INFRASTRUCTURE PLANS	
	DRAWN - JM	REVISED -			
PLOT SCALE = 100.000 ' / In.	CHECKED - RL	REVISED -			
PLOT DATE = 8/9/2023	DATE = 08/11/2023	REVISED -		SCALE: 1"=50' SHEET 9 OF 9 SHEETS STA. 402+00 TO STA. 410+00	

F.A.I. RTE.	SECTION	COUNTY	TOTAL SHEETS	SHEET NO.
I-80	FAI 80 21 STRUCTURE 7	WILL	1059	511
		CONTRACT NO. 62R28		
		ILLINOIS	FED. AID PROJECT	

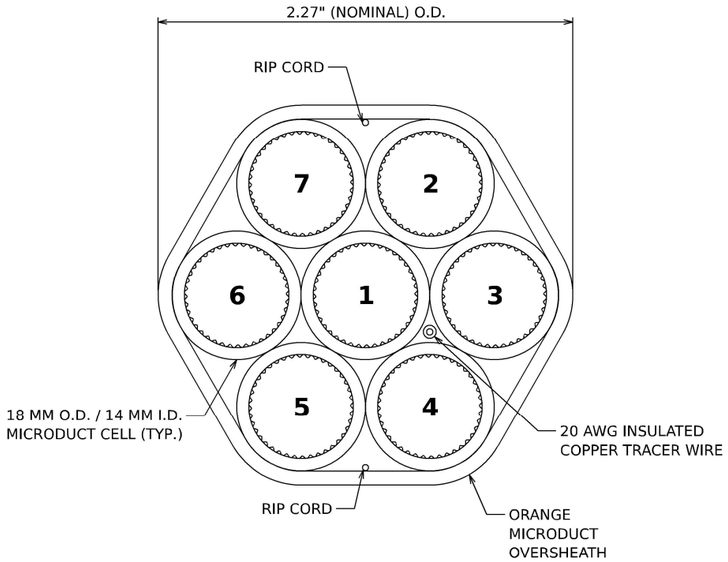

IDOT MICRODUCT DETAIL

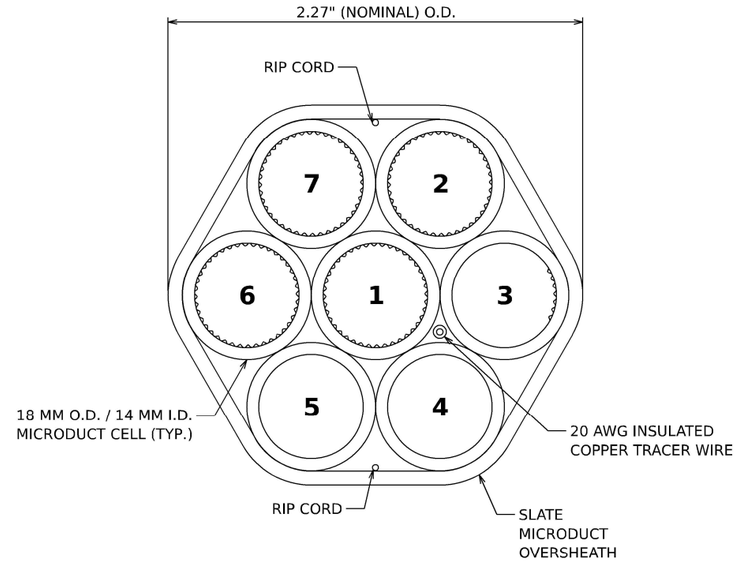

THIRD PARTY MICRODUCT DETAIL

CELL NO.	CELL COLOR	CELL ALLOCATION
1	BLUE	FUTURE 144 IDOT (TCF)
2	ORANGE	FUTURE 144 IDOT (DCF)
3	GREEN	SPARE
4	BROWN	SPARE
5	GREY	SPARE
6	WHITE	SPARE
7	RED	SPARE

IDOT MICRODUCT CELL INFORMATION

CELL NO.	CELL COLOR	CELL ALLOCATION
1	BLUE	FUTURE 144 THIRD PARTY
2	ORANGE	SPARE
3	GREEN	SPARE
4	BROWN	SPARE
5	GREY	SPARE
6	WHITE	SPARE
7	RED	SPARE

THIRD PARTY MICRODUCT CELL INFORMATION

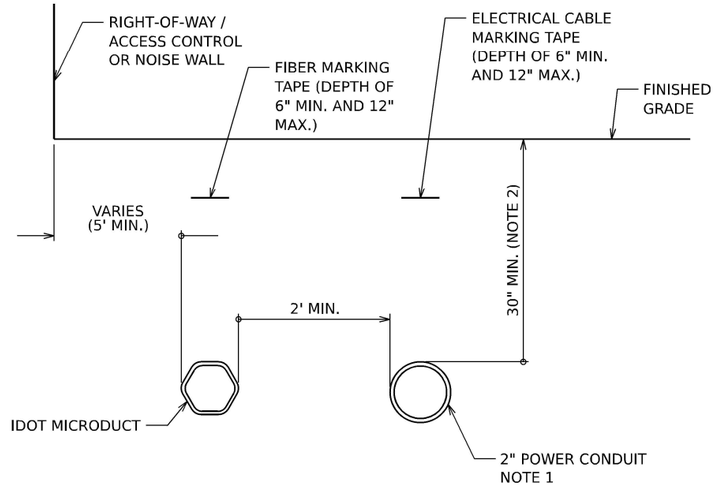

I-80 WESTBOUND TYPICAL CONDUIT SECTION

NOTES

1. INSTALLATION CONFIGURATION/QUANTITY OF POWER CONDUITS VARIES BY LOCATION.
2. GREATER DEPTH MAY BE REQUIRED IN CERTAIN SITUATIONS, INCLUDING, BUT NOT LIMITED TO: ENTERING HANDHOLES/VAULTS, UTILITY AVOIDANCE, CROSSING BENEATH BOX CULVERTS.

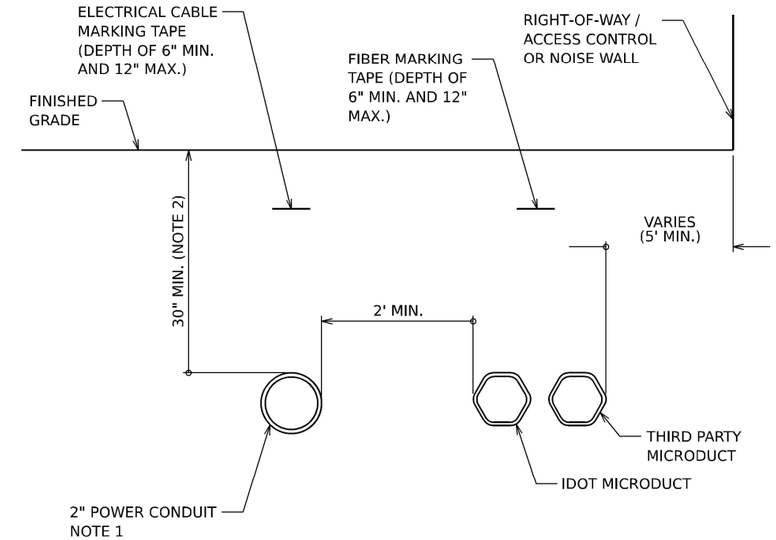

I-80 EASTBOUND TYPICAL CONDUIT SECTION

NOTES

1. INSTALLATION CONFIGURATION/QUANTITY OF POWER CONDUITS VARIES BY LOCATION.
2. GREATER DEPTH MAY BE REQUIRED IN CERTAIN SITUATIONS, INCLUDING, BUT NOT LIMITED TO: ENTERING HANDHOLES/VAULTS, UTILITY AVOIDANCE, CROSSING BENEATH BOX CULVERTS.

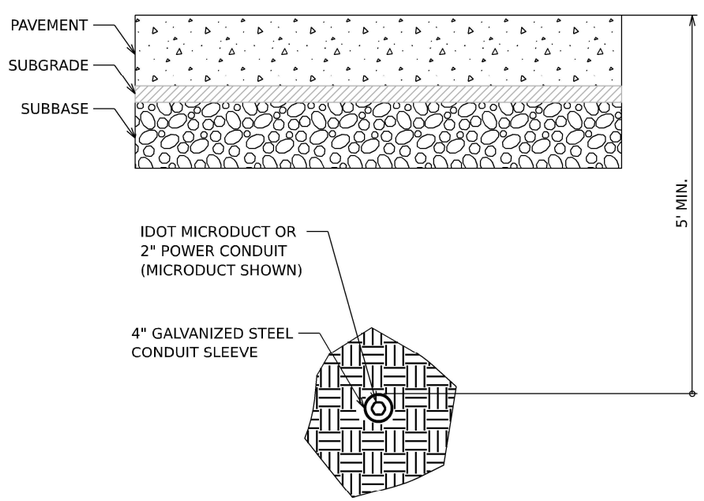

BORED CONDUIT UNDER ROADWAY

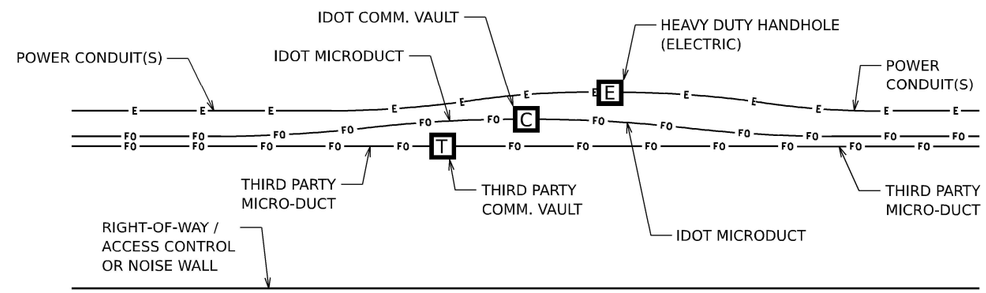

TYPICAL CONDUIT ROUTING AT HANDHOLES

NOTES

1. INSTALLATION CONFIGURATION/QUANTITY OF POWER CONDUITS VARIES BY LOCATION AND ROADWAY DIRECTION. EASTBOUND DIRECTION SHOWN ABOVE WITH POWER CONDUIT, IDOT MICRODUCT, AND THIRD PARTY MICRODUCT.
2. IDOT MICRODUCT SHALL ENTER IDOT COMMUNICATIONS VAULTS ONLY.
3. THIRD PARTY MICRODUCT SHALL ENTER THIRD PARTY COMMUNICATIONS VAULTS ONLY.

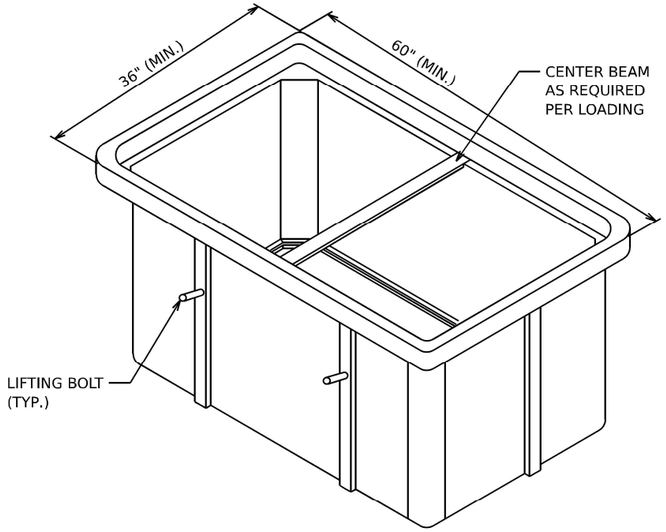

VAULT BOX
ISOMETRIC VIEW

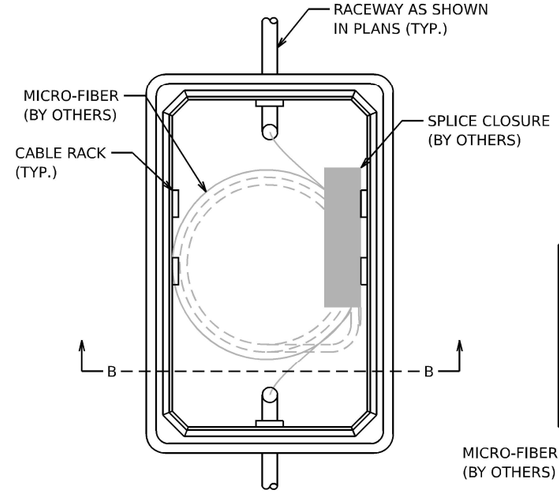

TOP VIEW

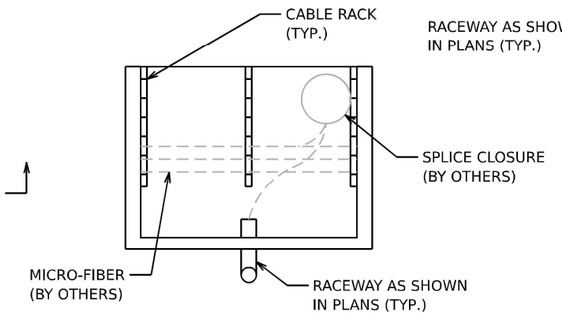

SECTION B-B

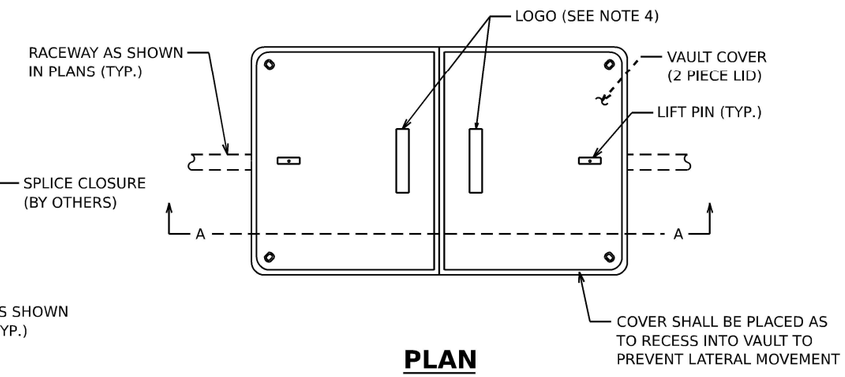

PLAN

NOTES:

1. GROUND ROD, 1-1/2" CONDUIT, #6 AWG GROUND WIRE, LOCATE POST AND ASSOCIATED WORK ARE INCLUDED AS PART OF COMMUNICATIONS VAULT AND WILL NOT BE PAID FOR SEPARATELY. ALL MATERIALS FOR MECHANICAL CONNECTION SHALL BE UL LISTED AND INSTALLED PER NEC ARTICLE 250.
2. #20 AWG TRACER CABLE SHALL BE SPLICED TO THE #20 AWG TRACER CABLE IN THE MICRODUCT USING A WATERPROOF SPLICE KIT AS RECOMENDED BY THE MICRODUCT MANUFACTURER. THE #20 AWG WIRE, SPLICE KIT AND ASSOCIATED WORK ARE INCLUDED AS PART OF COMMUNICATIONS VAULT AND WILL NOT BE PAID FOR SEPARATELY.
3. A WATERPROOF MICRODUCT PLUG(S) OR INNERDUCT PLUG SHALL BE INSTALLED AROUND EACH MICRODUCT OR INNERDUCT TO SEAL AROUND THE DUCT FOR ALL MICRODUCTS OR INNERDUCTS COMING INTO THE VAULT. THE PLUGS SHALL BE APPROPRIATELY SIZED AND INSTALLED AS RECOMMENDED BY THE MANUFACTURER AND IS INCLUDED AS PART OF THE MICRODUCT OR INNERDUCT PAY ITEM AND WILL NOT BE PAID SEPARATELY.
4. IDOT COMMUNICATIONS VAULTS SHALL HAVE A PERMANENTLY RECESSED LOGO THAT READS "IDOT" AND THIRD PARTY COMMUNICATIONS VAULTS SHALL HAVE A PERMANENTLY RECESSED LOGO THAT READS "IDOT - BB".
5. COMMUNICATIONS VAULT SHALL HAVE AN OPEN BASE. ALL CONDUITS AS SHOWN ON THE PLANS SHALL ENTER THE VAULT VIA THE OPEN BASE.
6. ALL DIMENSIONS ARE MINIMUM AND A LARGER SIZE VAULT MAY BE USED, WITH THE APPROVAL OF THE ENGINEER, TO FACILITATE USING A MANUFACTURER'S STANDARD PRODUCT.

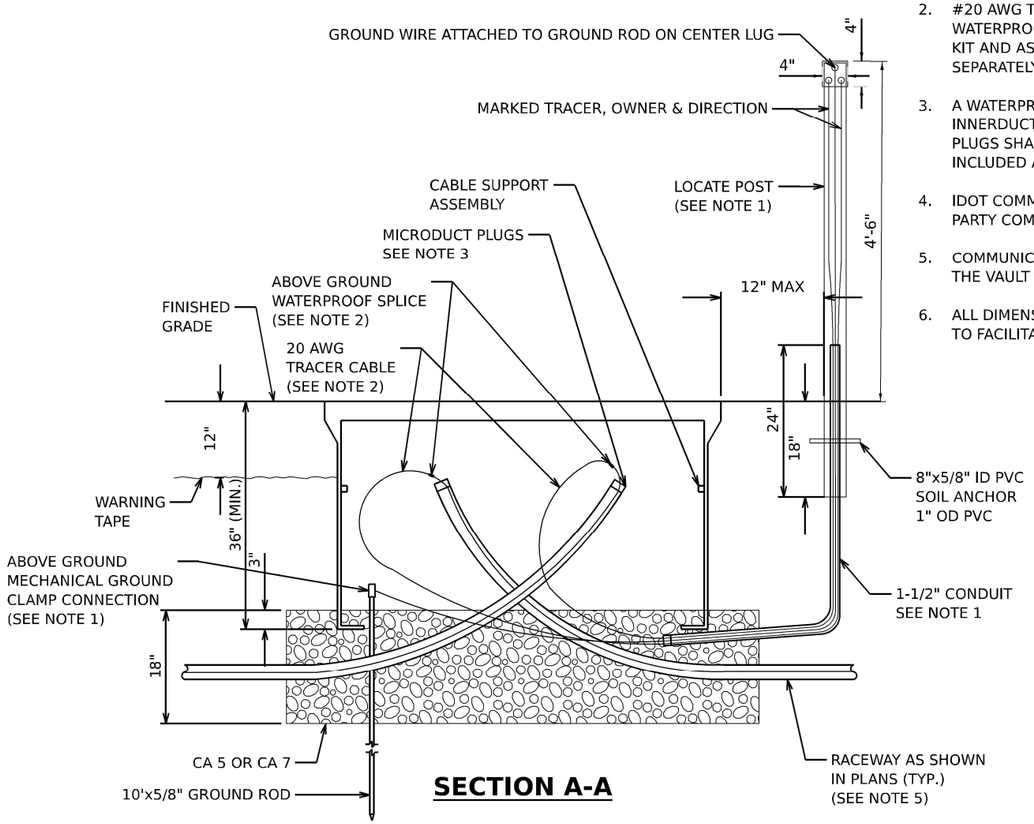

SECTION A-A

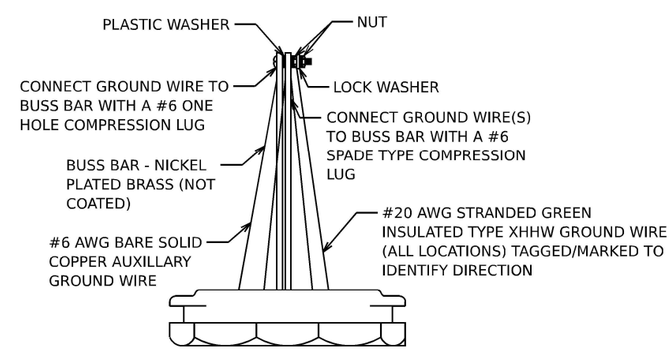

LOCATE POST TOP HAT BOND PLATE
N.T.S.

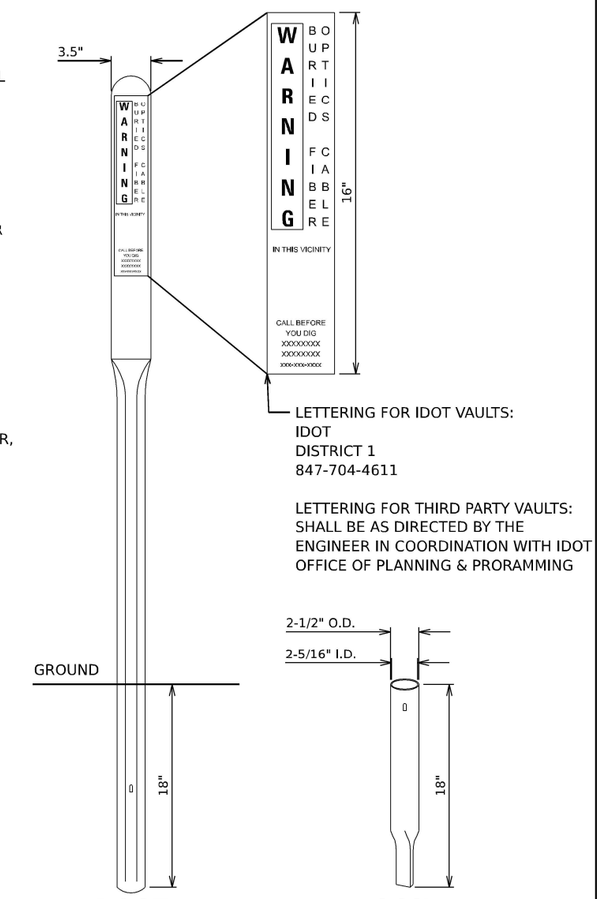

POST

SOIL ANCHOR

MODEL: Default
FILE NAME: pw://transystems-pw.bentley.com:transyscorp-pw1-hosted/Documents/Projects_2018/CH401/401180022/01-Stantec/CAD/ML-04_62R28/04-Sheets/07-Utilities/D162R28-sht-its-dec-03.dgn

TranSmart 100 S. Wacker Drive Suite 400 Chicago, Illinois 60606	USER NAME = dmeler	DESIGNED - DM	REVISED -	STATE OF ILLINOIS DEPARTMENT OF TRANSPORTATION	ITS INFRASTRUCTURE DETAILS COMMUNICATION VAULT
		DRAWN - JM	REVISED -		
	PLOT SCALE = 100.000 ' / in.	CHECKED - RL	REVISED -		
	PLOT DATE = 8/9/2023	DATE - 08/11/2023	REVISED -		SCALE: NA SHEET 3 OF 20 SHEETS STA. NA TO STA. NA

F.A.I. RTE.	SECTION	COUNTY	TOTAL SHEETS	SHEET NO.
I-80	FAI 80 21 STRUCTURE 7	WILL	1059	514
		CONTRACT NO. 62R28		
		ILLINOIS	FED. AID PROJECT	

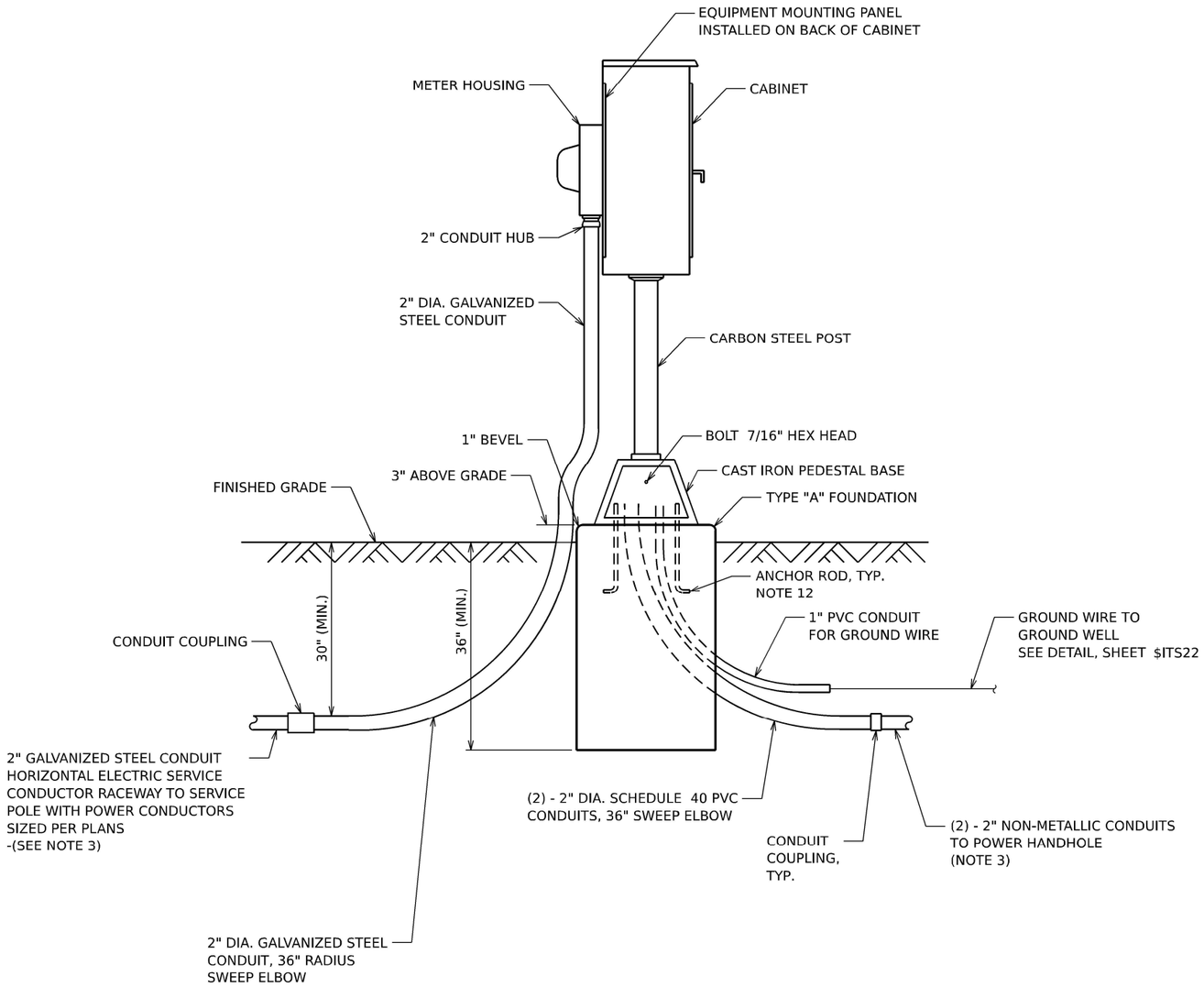

SERVICE PEDESTAL WITH METER

NOTES

1. SERVICE VOLTAGE SHALL BE AS INDICATED ELSEWHERE IN THE DRAWINGS.
2. UNLESS OTHERWISE INDICATED, ALL ITEMS AND WORK SHOWN SHALL BE INCLUDED AND PAID AS PART OF THE ELECTRIC UTILTIY SERVICE INSTALLATION PAY ITEM.
3. THE HORIZONTAL ELECTRIC SERVICE CONDUCTOR RACEWAY/CONDUCTORS AND NON-METALLIC CONDUITS TO POWER HANDHOLE SHALL BE MEASURED SEPARATELY FOR PAYMENT.
4. CABINETS, CABINET POSTS AND CABINET PEDESTALS SHALL BE PRIMED AND PAINTED. THE EXTERIOR SHALL HAVE TWO EPOXY FINISH COATS OF ANSI-61 GRAY. THE INTERIOR SHALL BE PAINTED WHITE.
5. METER HOUSING SHALL BE MOUNTED TO BACK WALL OF CABINET. PROVIDE A GATE IN ROW FENCE TO ALLOW UTILITY ACCESS TO READ THE METER.
6. CABLES FROM METER HOUSING SHALL PASS THROUGH BACK WALL OF CABINET.
7. METER HOUSING SHALL BE AS REQUIRED BY THE UTILITY.
8. THE CABINET SHALL BE 36"H X 20"W X 15"D, FABRICATED FROM ALUMINUM WITH A MINIMUM THICKNESS OF .125", RATED NEMA TYPE 3R AND HAVE A MOUNTING BACK PLATE.
9. THE CABINET DOOR SHALL HAVE A CONTINUOUS HINGE THAT IS BOLTED TO THE CABINET AND DOOR WITH 1/4-20 STAINLESS STEEL CARRIAGE BOLTS AND NY-LOCK NUTS. THE HINGE SHALL BE INSTALLED ON THE RIGHT SIDE WHEN FACING THE CABINET AND BE MADE OF STAINLESS STEEL WITH A 0.25 INCH DIAMETER STAINLESS STEEL HINGE PIN. THE HINGE PIN SHALL BE CAPPED TOP AND BOTTOM BY WELD TO RENDER IT TAMPER-PROOF. THE CABINET SHALL HAVE A GASKET THAT FORMS A WEATHER-TIGHT SEAL BETWEEN THE CABINET AND DOOR. THE DOOR LATCHING MECHANISM SHALL BE THE 3-POINT DRAW ROLLER TYPE. WHEN THE DOOR IS CLOSED AND LATCHED, IT WILL BE LOCKED. THE LATCHING HANDLE SHALL BE FABRICATED FROM A 0.75" STAINLESS STEEL ROUND BAR AND SHALL HAVE A PROVISION FOR PADLOCKING IN THE CLOSED POSITION.
10. THE ENCLOSURE SHALL BE EQUIPPED WITH TWO ADJUSTABLE "C" MOUNTING CHANNELS WELDED ON BOTH SIDE WALLS AND BACK WALL OF THE ENCLOSURE, ALLOWING VERSATILE POSITIONING OF SHELVES OR PANELS. MOUNTING CHANNELS SHALL BE FACTORY PAINTED SAME COLOR AS INTERIOR OF CABINET.
11. CABINET DOOR SHALL NOT HAVE COMPARTMENT DOORS OR LOUVERS. INTERIOR OF CABINET DOOR SHALL HAVE A PLASTIC POCKET FOR WIRING SCHEMATIC.
12. CONTRACTOR MUST COORDINATE WITH PEDESTAL BASE SUPPLIER AND FURNISH THE NECESSARY ANCHOR RODS.
13. THE ELECTRIC SERVICE EQUIPMENT ASSEMBLY SHALL BE ASSEMBLED BY A UL 508A INDUSTRIAL CONTROL PANEL FABRICATOR. THE PANEL ASSEMBLY SHALL BE UL LABELED AND SUITABLE FOR USE AS SERVICE EQUIPMENT.
14. ALL EQUIPMENT SHALL BE GROUNDED AND BONDED IN ACCORDANCE WITH THE NATIONAL ELECTRICAL CODE AND THE NATIONAL ELECTRICAL SAFETY CODE.
15. PLANS AND DETAILS INDICATE THE GENERAL NATURE AND REQUIREMENTS. THEY DO NOT SHOW EVERY ACCESSORY AND ATTACHMENT, AND THEY DO NOT RELIEVE THE CONTRCTOR OF THE REQUIREMENTS OF THE SPECIFICATIONS AND SPECIAL PROVISIONS TO ASCERTAIN UTILITY REQUIREMENTS AND TO COORDINATE ACCORDINGLY. FURNISHING ALL ITEMS AND WORK NOT PROVIDED BY THE UTILITY, BUT NECESSARY FOR A COMPLETE SERVICE INSTALLATION IS REQUIRED AND SHALL BE INCLUDED IN THE ELECTRIC UTILITY SERVICE INSTALLATION PAY ITEM.

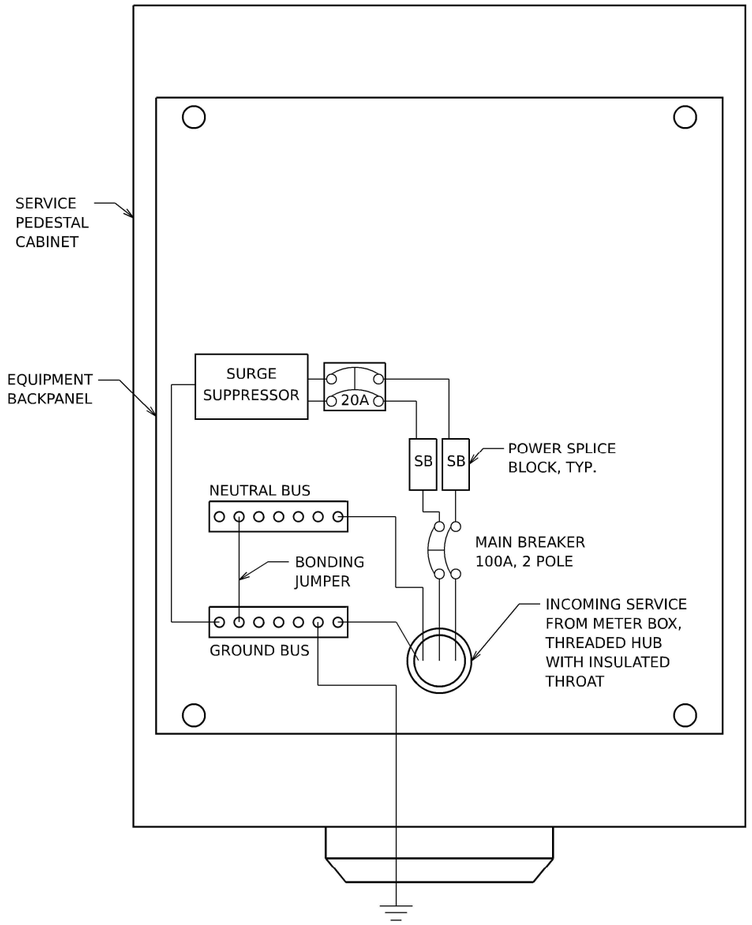

SERVICE PEDESTAL CABINET WIRING AND EQUIPMENT LAYOUT FRONTAGE ROAD - STA 47+82, 53' RT

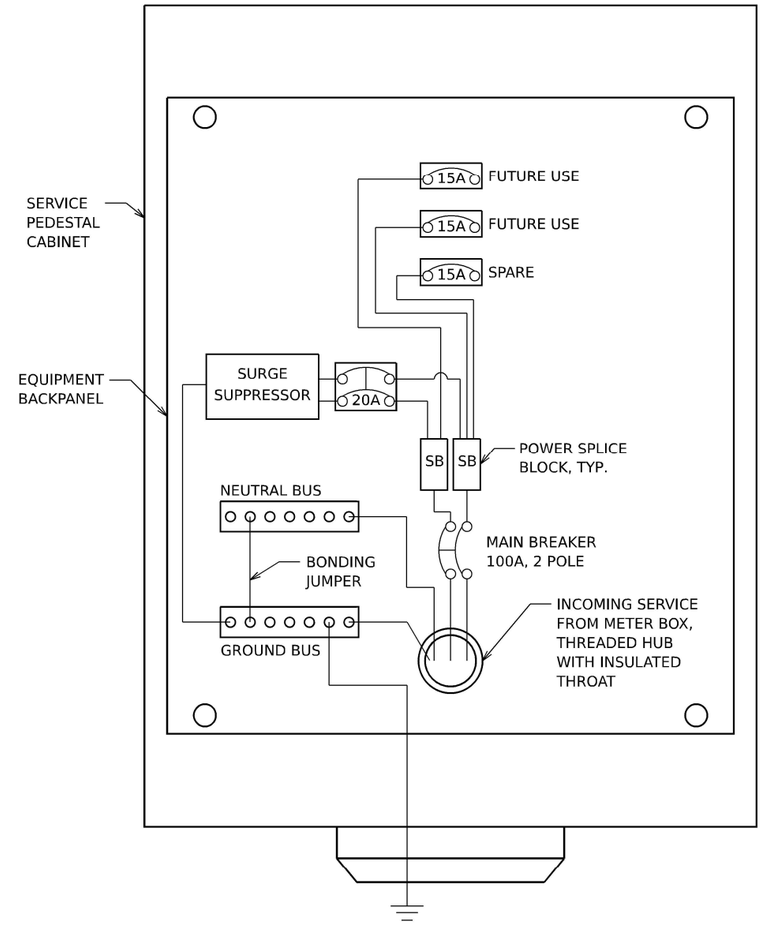

SERVICE PEDESTAL CABINET WIRING AND EQUIPMENT LAYOUT FRONTAGE ROAD - STA 34+60, 40' RT

NOTES

1. THE ELECTRIC SERVICE EQUIPMENT ASSEMBLY SHALL BE UL LABELED, SUITABLE FOR USE AS SERVICE EQUIPMENT.

2. CIRCUIT BREAKERS SHALL BE THERMAL MAGNETIC BOLT-ON TYPE WITH A MINIMUM INTERRUPTING CAPACITY OF 65,000 SYMETRICAL AMPERES AT 240V LINE TO LINE SERVICE OR 14,000 AT 480V RATED LINE TO LINE SERVICE. THEY SHALL BE LOCKABLE IN THE "OFF" POSITION FOR COMPLIANCE WITH OSHA LOCK-OUT/TAG-OUT REQUIREMENTS. HANDLES SHALL BE TRIP FREE.

3. THE SURGE PROTECTOR SHALL BE SUITABLE FOR THE INCOMING SINGLE PHASE 60HZ AC ELECTRICAL SERVICE, WITH A SURGE CURRENT RATING OF 50,000 AMPS OR BETTER, RATED -40 TO 65 DEGREES C., WITH LED OPERATING IDICATORS, AND SHALL BE UL LISTED PER UL 1449. SURGE PROTECTOR SHALL BE WIRED FOR THE INCOMING SERVICE VOLTAGE. FOLLOW MANUFACTURER RECOMMENDED WIRING SPECIFICATIONS.

4. BUS BARS, CONNECTORS AND LUGS SHALL BE COPPER, INSULATED AND ISOLATED AND CONFIGURED TO PREVENT SHORTED CONDITIONS FROM TIGHTENING TERMINATIONS, ETC. THE OVERALL BUS SECTION SHALL BE CONFIGURED BEHIND AN INSULATING BARRIER SHIELD WHICH IS REMOVABLE FOR ACCESS TO CONNECTIONS.

5. THE COMBINATION GROUND AND NEUTRAL BAR SHALL BE CONFIGURED WITH SEPARATE GROUND AND NEUTRAL SECTIONS AND SPARE TERMINALS AS INDICATED. THE HEADS OF GROUND SCREWS SHALL BE PAINTED GREEN. THE HEADS OF NEUTRAL SCREWS SHALL BE PAINTED WHITE.

6. A PLASTIC LAMINATED CABINET LAYOUT DIAGRAM, CIRCUIT SCHEMATIC, AND BILL OF MATERIALS WITH CATALOG NUMBERS USED SHALL BE AFFIXED TO THE INTERIOR SIDE OF THE ENCLOSURE DOOR.

7. EQUIPMENT IN DIAGRAM ABOVE IS NOT TO SCALE AND WIRING SCHEMATIC IS DIAGRAMMATIC. CONTRACTOR TO SUBMIT WIRING DIAGRAM AND EQUIPMENT LAYOUT FOR APPROVAL BY THE ENGINEER.

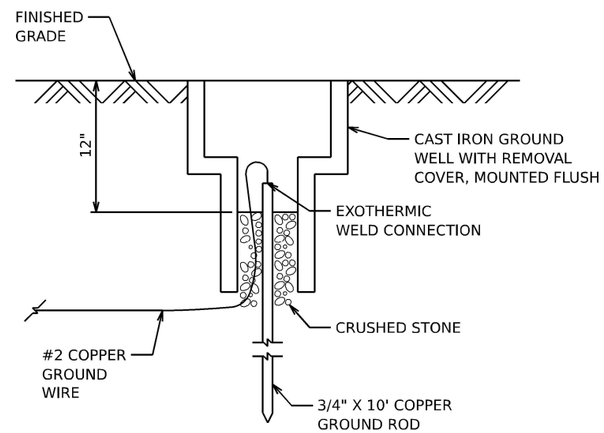

GROUND WELL DETAIL

MODEL: Default
FILE NAME: pw://transystems-pw.bentley.com:transyscorp-pw1-hosted/Documents/Projects_2018/CH401/401180022/01-Slantec/CAD/ML-04_62R28/04-Sheets/07-Utilities/D162R28-sht-its-det-06.dgn

TranSmart
100 S. Wacker Drive Suite 400
Chicago, Illinois 60606

USER NAME = dmeier	DESIGNED - DM	REVISED -	
	DRAWN - JM	REVISED -	
PLOT SCALE = 100.000 ' / in.	CHECKED - RL	REVISED -	
PLOT DATE = 8/9/2023	DATE - 08/11/2023	REVISED -	

STATE OF ILLINOIS
DEPARTMENT OF TRANSPORTATION

ITS INFRASTRUCTURE DETAILS
GROUND WELL DETAIL

SCALE: NA | SHEET 6 OF 20 SHEETS | STA. NA TO STA. NA

F.A.I. RTE.	SECTION	COUNTY	TOTAL SHEETS	SHEET NO.
I-80	FAI 80 21 STRUCTURE 7	WILL	1059	517
		CONTRACT NO. 62R28		
		ILLINOIS	FED. AID PROJECT	

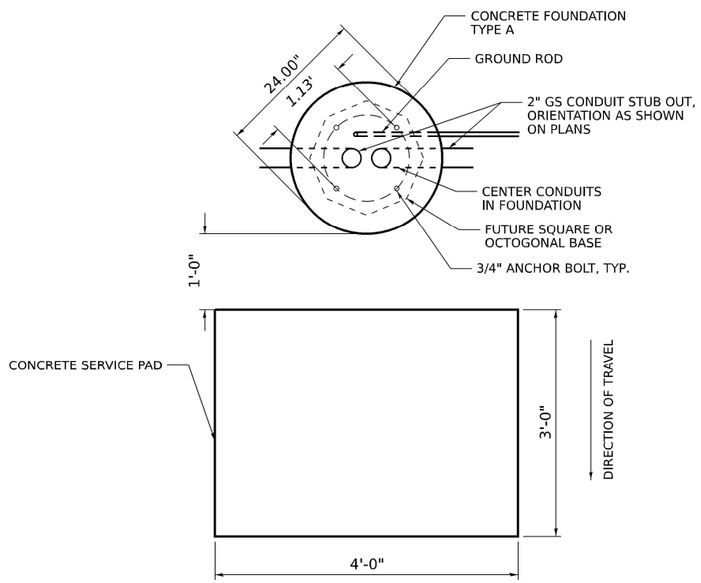

TOP VIEW
TYPE A FOUNDATION FOR FUTURE SERVICE DISCONNECT

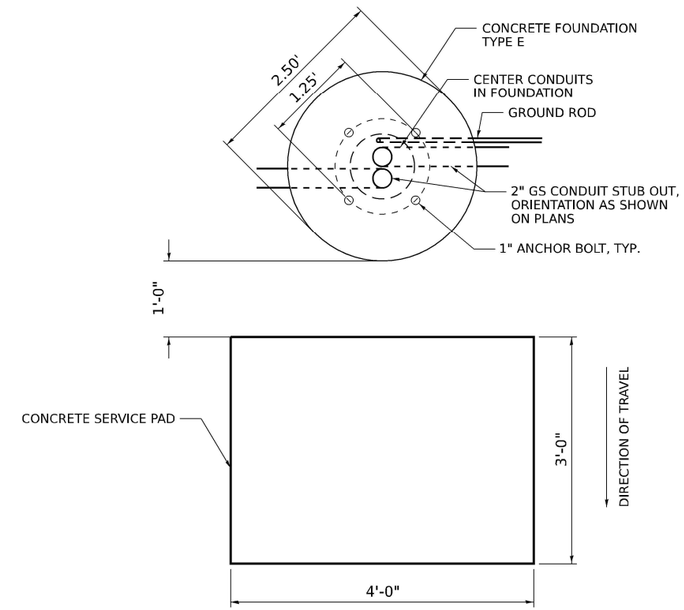

TOP VIEW
TYPE E FOUNDATION FOR FUTURE CCTV POLE

NOTES

1. TOP VIEW FOR CONCRETE FOUNDATIONS, TYPE A AND E SHOWN ON THIS SHEET ARE FOR INFORMATION ONLY ON CONDUITS ENERTING FOUNDATION AND ANOCHOR BOLT CIRCLE DIMENSIONS REQUIRED FOR FUTURE EQUIPMENT INSTALLATION. FOR FURTHER FOUNDATION DETAILS, SEE HIGHWAY STANDARD 878001-11 (CONCRETE FOUNDATION DETAILS).

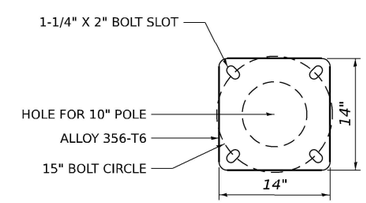

FUTURE CCTV POLE BASE PLATE DETAIL
15" BOLT CIRCLE
(SHOWN FOR REFERENCE ONLY)

MODEL: Default
FILE NAME: pw://transystems-pw.bentley.com:transyscorp-pw1-hosted/Documents/Projects_2018/CH401/401180022/01-Stantec/CAD/ML-04_62R28/04-Sheets/07-Utilities/D162R28-sht-its-det-07.dgn

TranSmart
100 S. Wacker Drive Suite 400
Chicago, Illinois 60606

USER NAME = dmeier	DESIGNED - DM	REVISED -	
	DRAWN - JM	REVISED -	
PLOT SCALE = 100.000 ' / in.	CHECKED - RL	REVISED -	
PLOT DATE = 8/9/2023	DATE - 08/11/2023	REVISED -	

STATE OF ILLINOIS
DEPARTMENT OF TRANSPORTATION

ITS INFRASTRUCTURE DETAILS
CONCRETE FOUNDATIONS

SCALE: NA | SHEET 7 OF 20 SHEETS | STA. NA | TO STA. NA

F.A.I. RTE.	SECTION	COUNTY	TOTAL SHEETS	SHEET NO.
I-80	FAI 80 21 STRUCTURE 7	WILL	1059	518
		CONTRACT NO. 62R28		
		ILLINOIS	FED. AID PROJECT	

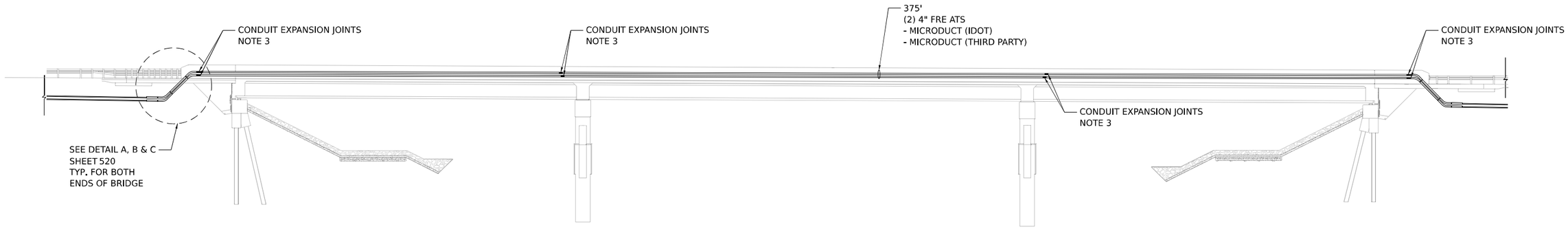

ITS CONDUIT ATTACHED TO STRUCTURE
I-80 EB OVER DUPAGE RIVER
ELEVATION (LOOKING NORTH)

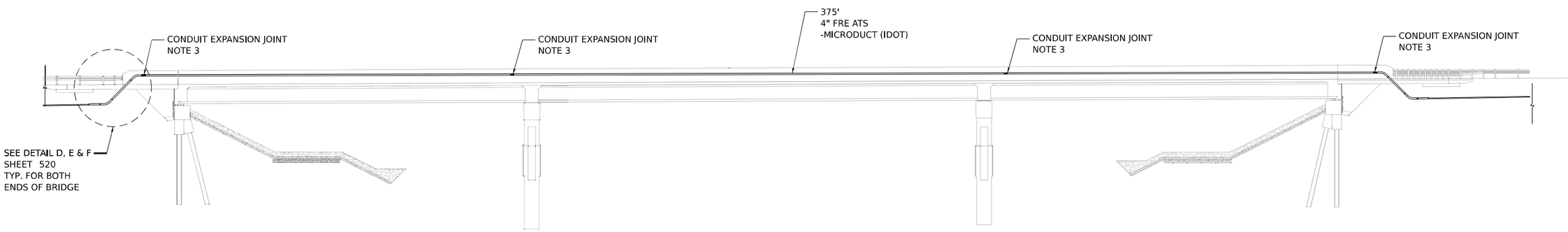

ITS CONDUIT ATTACHED TO STRUCTURE
I-80 WB OVER DUPAGE RIVER
ELEVATION (LOOKING SOUTH)

NOTES

1. THIS SHEET IS FOR ITS CONDUIT ATTACHED TO STRUCTURE ONLY. SEE STRUCTURE NO. 099-8312 (EB) AND 099-8313 (WB) SHEETS FOR BRIDGE PLANS.
2. CONDUIT SUPPORTS NOT SHOWN FOR CLARITY.
3. CONDUIT EXPANSION JOINTS SHALL BE INSTALLED AT EACH END OF THE BRIDGE AND AT ALL BRIDGE EXPANASION JOINT OR INTERIOR FULL-DEPTH PARAPET JOINT LOCATIONS AND PER MANUFACTURER'S RECOMMENDATIONS.

MODEL: Default
FILE NAME: pw://transystems-pw.bentley.com:transyscorp-pw1-hosted/Documents/Projects_2018/CH401/401180022/01-Stantec/CAD/ML-04 62R28/04-Sheets/07-Utilities/D162R28-ITS-ITS-det-08.dgn

TranSmart
100 S. Wacker Drive Suite 400
Chicago, Illinois 60606

USER NAME = dmeller	DESIGNED - DM	REVISED -	
	DRAWN - JM	REVISED -	
PLOT SCALE = 100.000 ' / In.	CHECKED - RL	REVISED -	
PLOT DATE = 8/9/2023	DATE - 08/11/2023	REVISED -	

STATE OF ILLINOIS
DEPARTMENT OF TRANSPORTATION

ITS INFRASTRUCTURE DETAILS
CONDUIT ATS – DUPAGE RIVER

SCALE: NA | SHEET 8 OF 20 SHEETS | STA. NA | TO STA. NA

F.A.I. RTE.	SECTION	COUNTY	TOTAL SHEETS	SHEET NO.
I-80	FAI 80 21 STRUCTURE 7	WILL	1059	519
		CONTRACT NO. 62R28		
	ILLINOIS	FED. AID PROJECT		

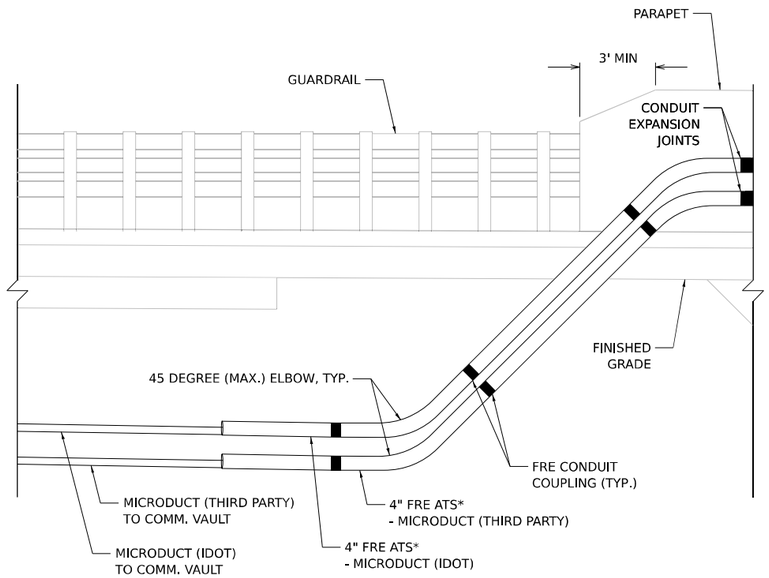

*FRE CONDUIT BELOW GRADE PAID FOR AS CONDUIT ATTACHED TO STRUCTURE

DETAIL A
I-80 EB OVER DUPAGE RIVER
WEST END OF BRIDGE

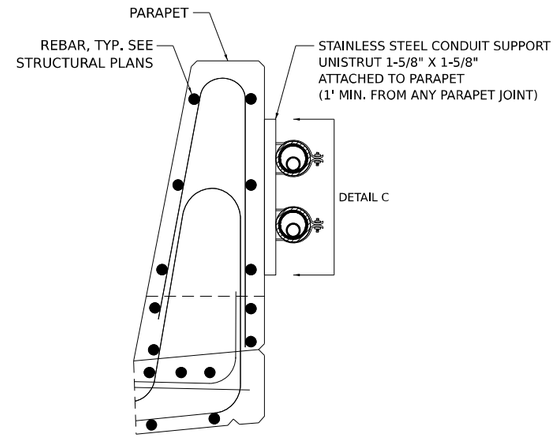

DETAIL B
I-80 EB OVER DUPAGE RIVER
BRIDGE PARAPET CROSS SECTION

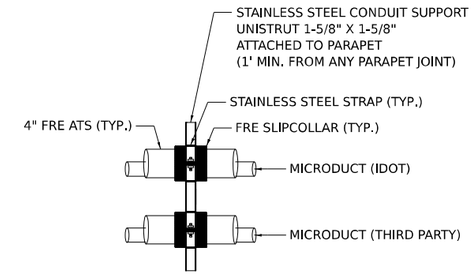

DETAIL C
I-80 EB OVER DUPAGE RIVER
TYPICAL CONDUIT SUPPORT DETAIL

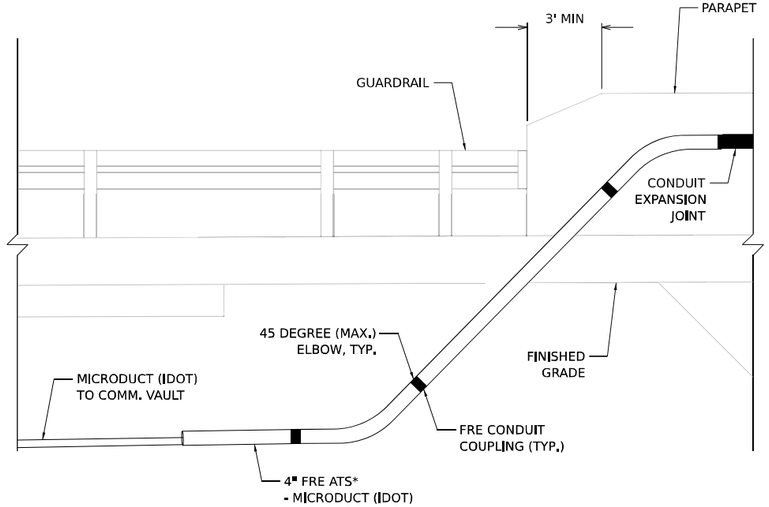

*FRE CONDUIT BELOW GRADE PAID FOR AS CONDUIT ATTACHED TO STRUCTURE

DETAIL D
I-80 WB OVER DUPAGE RIVER
EAST END OF BRIDGE

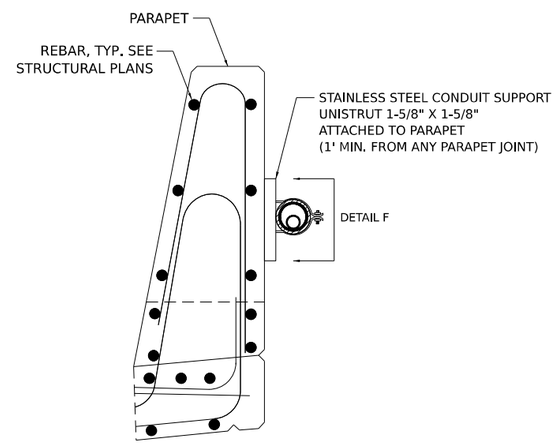

DETAIL E
I-80 WB OVER DUPAGE RIVER
BRIDGE PARAPET CROSS SECTION

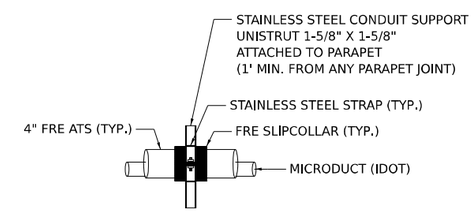

DETAIL F
I-80 WB OVER DUPAGE RIVER
TYPICAL CONDUIT SUPPORT DETAIL

MODEL: Default
FILE NAME: pw://transystems-pw.bentley.com:transyscorp-pw1-hosted/Documents/Projects_2018/CH401/401180022/01-Stantec/CAD/ML-04 62R28/04-Sheets/07-Utilities/D162R28-ITS-ITS-det-09.dgn

TranSmart
100 S. Wacker Drive Suite 400
Chicago, Illinois 60606

USER NAME = dmeller	DESIGNED - DM	REVISED -	
	DRAWN - JM	REVISED -	
PLOT SCALE = 100.000 ' / In.	CHECKED - RL	REVISED -	
PLOT DATE = 8/9/2023	DATE - 08/11/2023	REVISED -	

STATE OF ILLINOIS
DEPARTMENT OF TRANSPORTATION

ITS INFRASTRUCTURE DETAILS
CONDUIT ATS – DUPAGE RIVER

SCALE: NA | SHEET 9 OF 20 SHEETS | STA. NA TO STA. NA

F.A.I. RTE.	SECTION	COUNTY	TOTAL SHEETS	SHEET NO.
I-80	FAI 80 21 STRUCTURE 7	WILL	1059	520
		CONTRACT NO. 62R28		
		ILLINOIS	FED. AID PROJECT	

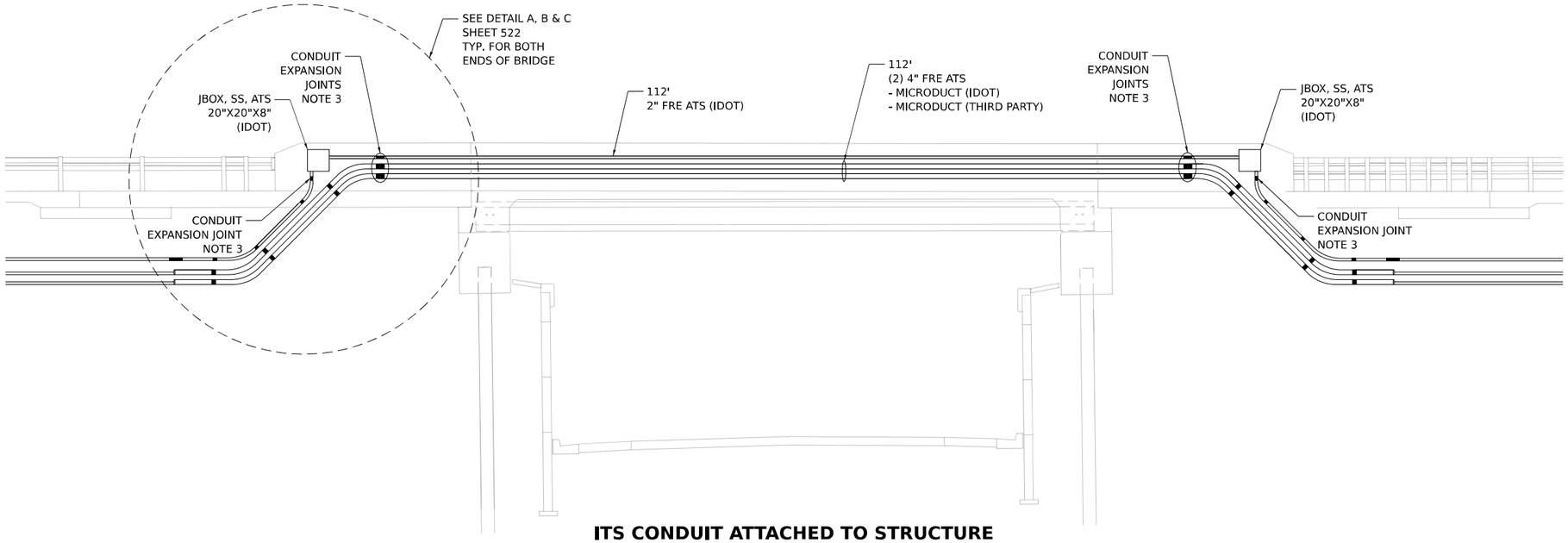

ITS CONDUIT ATTACHED TO STRUCTURE
I-80 EB OVER FRONTAGE ROAD
ELEVATION (LOOKING NORTH)

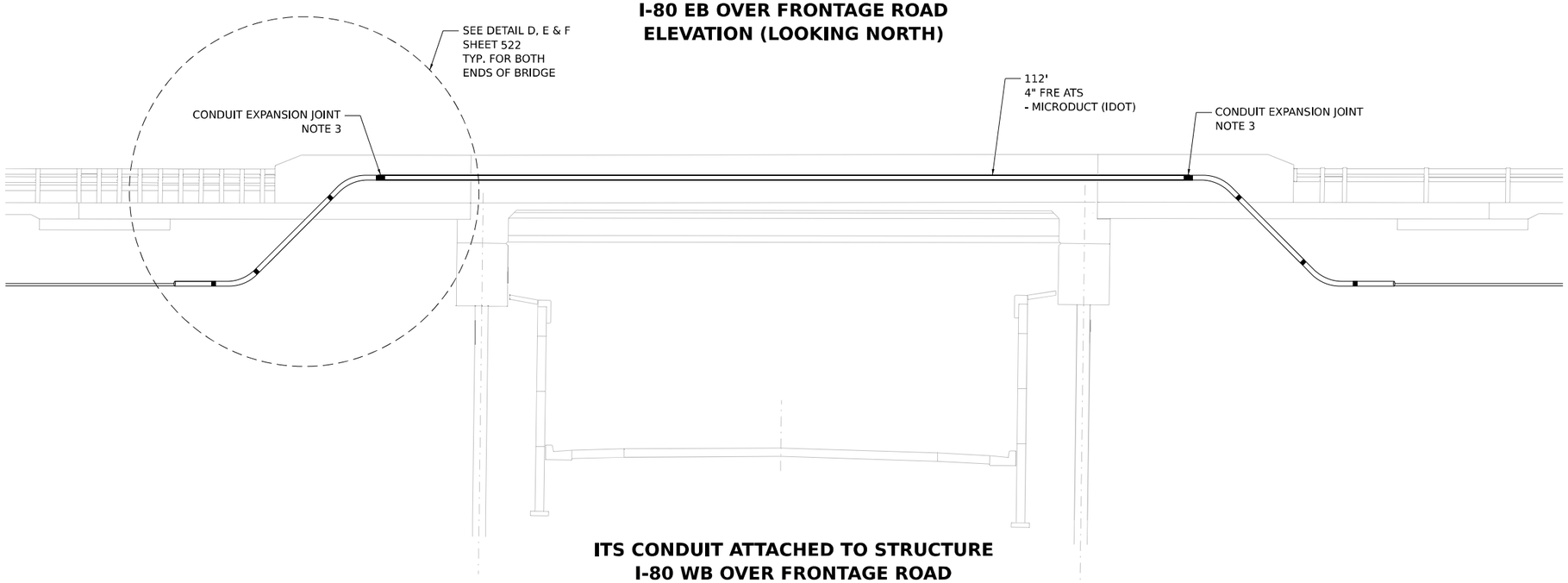

ITS CONDUIT ATTACHED TO STRUCTURE
I-80 WB OVER FRONTAGE ROAD
ELEVATION (LOOKING SOUTH)

NOTES

1. THIS SHEET IS FOR ITS CONDUIT ATTACHED TO STRUCTURE ONLY. SEE STRUCTURE NO. 099-8314 (EB) AND 099-8315 (WB) SHEETS FOR BRIDGE PLANS.
2. CONDUIT SUPPORTS NOT SHOWN FOR CLARITY.
3. CONDUIT EXPANSION JOINTS SHALL BE INSTALLED AT EACH END OF THE BRIDGE AND AT ALL EXPANSION JOINT OR INTERIOR FULL-DEPTH PARAPET JOINT LOCATIONS AND PER MANUFACTURER'S RECOMMENDATIONS.

MODEL: Default
FILE NAME: pw://transystems-pw.bentley.com:transyscorp-pw1-hosted/Documents/Projects_2018/CH401/401180022/01-Stantec/CAD/ML-04 62R28/04-Sheets/07-Utilities/D162R28-ITS-ITS-det-10.dgn

*FRE CONDUIT BELOW GRADE PAID FOR AS CONDUIT ATTACHED TO STRUCTURE

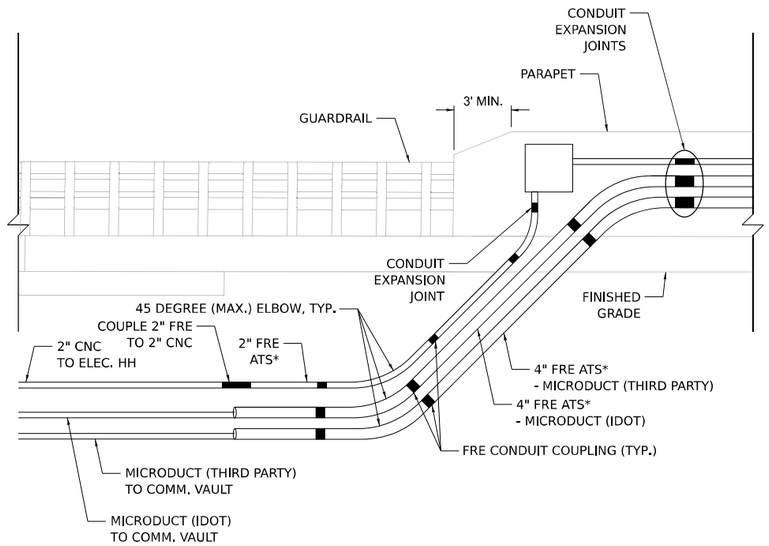

DETAIL A
I-80 EB OVER FRONTAGE ROAD
WEST END OF BRIDGE

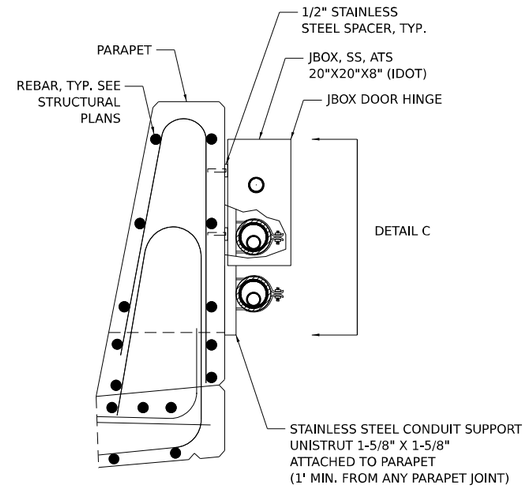

DETAIL B
I-80 EB OVER FRONTAGE ROAD
BRIDGE PARAPET CROSS SECTION

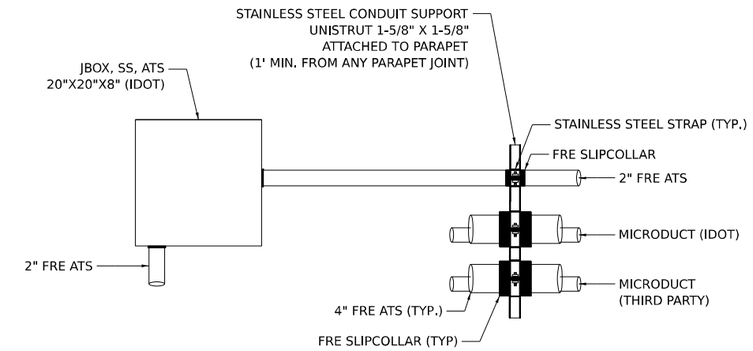

DETAIL C
I-80 EB OVER FRONTAGE ROAD
TYPICAL CONDUIT SUPPORT DETAIL

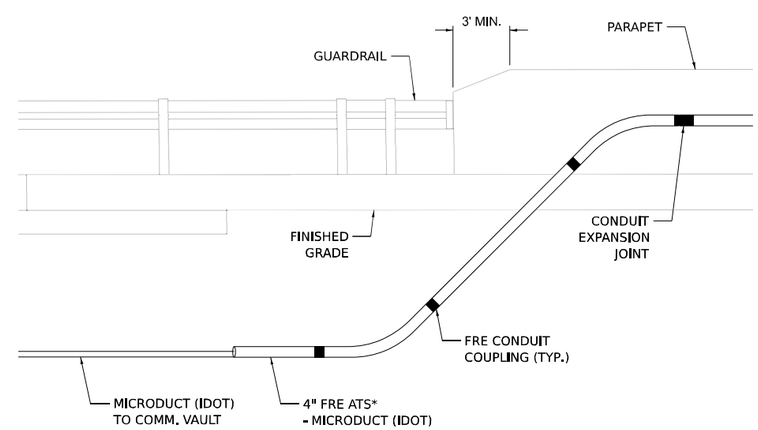

*FRE CONDUIT BELOW GRADE PAID FOR AS CONDUIT ATTACHED TO STRUCTURE

DETAIL D
I-80 WB OVER FRONTAGE ROAD
EAST END OF BRIDGE

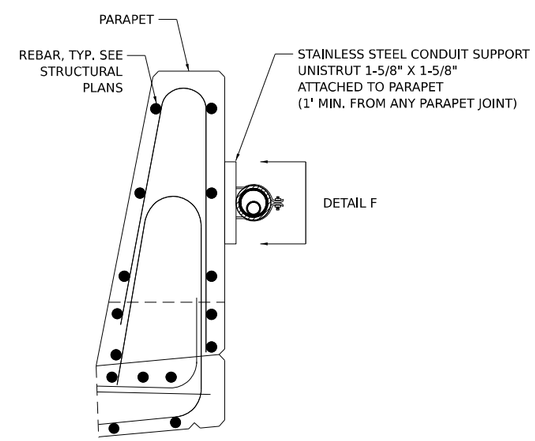

DETAIL E
I-80 WB OVER FRONTAGE ROAD
BRIDGE PARAPET CROSS SECTION

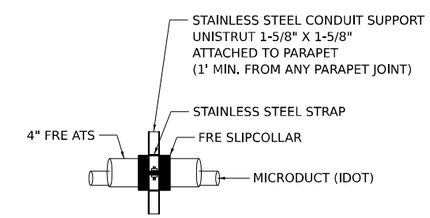

DETAIL F
I-80 WB OVER FRONTAGE ROAD
TYPICAL CONDUIT SUPPORT DETAIL

MODEL: Default
FILE NAME: pw://transystems-pw.bentley.com:transyscorp-pw1-hosted/Documents/Projects_2018/CH401/401180022/01-Siantec/CAD/MI-04 62R28/04-Sheets/07-Utilities/D162R28-ITS-ITS-det-11.dgn

TranSmart 100 S. Wacker Drive Suite 400 Chicago, Illinois 60606	USER NAME = dmeller	DESIGNED - DM	REVISED -	STATE OF ILLINOIS DEPARTMENT OF TRANSPORTATION	ITS INFRASTRUCTURE DETAILS CONDUIT ATS – FRONTAGE ROAD
		DRAWN - JM	REVISED -		
	PLOT SCALE = 100.000 ' / In.	CHECKED - RL	REVISED -		
	PLOT DATE = 8/9/2023	DATE - 08/11/2023	REVISED -		SCALE: NA · SHEET 11 OF 20 SHEETS · STA. NA · TO STA. NA

F.A.I. RTE.	SECTION	COUNTY	TOTAL SHEETS	SHEET NO.
I-80	FAI 80 21 STRUCTURE 7	WILL	1059	522
		CONTRACT NO. 62R28		
		ILLINOIS	FED. AID PROJECT	

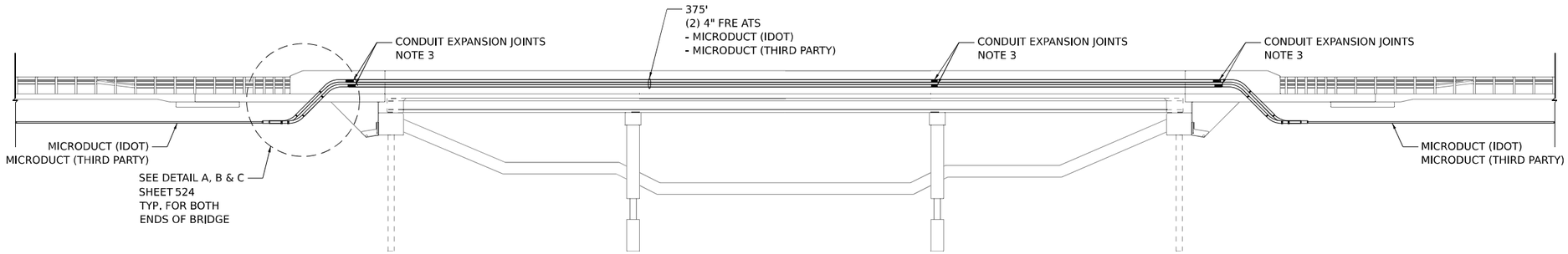

ITS CONDUIT ATTACHED TO STRUCTURE
I-80 EB OVER ROCK RUN CREEK
ELEVATION (LOOKING NORTH)

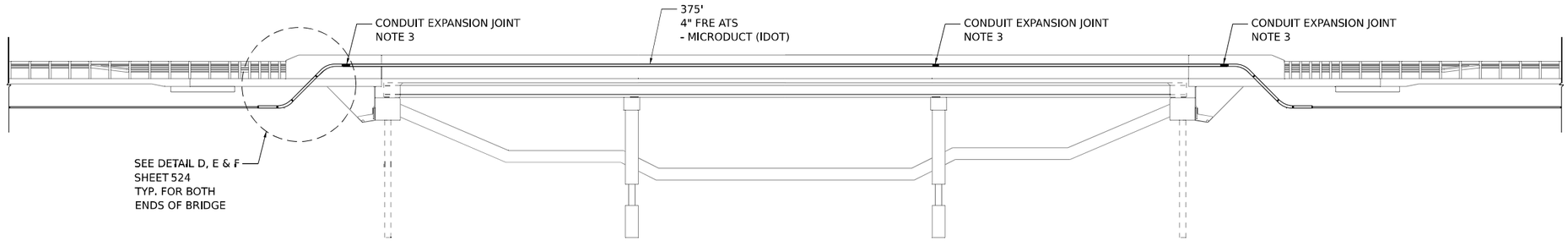

ITS CONDUIT ATTACHED TO STRUCTURE
I-80 WB OVER ROCK RUN CREEK
ELEVATION (LOOKING SOUTH)

NOTES

1. THIS SHEET IS FOR ITS CONDUIT ATTACHED TO STRUCTURE ONLY. SEE STRUCTURE NO. 099-8318 (EB) AND 099-8319 (WB) SHEETS FOR BRIDGE PLANS.
2. CONDUIT SUPPORTS NOT SHOWN FOR CLARITY.
3. CONDUIT EXPANSION JOINTS SHALL BE INSTALLED AT EACH END OF THE BRIDGE AND AT ALL BRIDGE EXPANSION JOINT OR INTERIOR FULL-DEPTH PARAPET JOINT LOCATIONS AND PER MANUFACTURER'S RECOMMENDATIONS.

MODEL: Default
FILE NAME: pw://transystems-pw.bentley.com:transyscorp-pw1-hosted/Documents/Projects_2018/CH401/401180022/01-Sitetec/CAD/ML-04 62R28/04-Sheets/07-Utilities/D162R28-ITS-ITS-det-12.dgn

TranSmart 100 S. Wacker Drive Suite 400 Chicago, Illinois 60606	USER NAME = dmeller	DESIGNED - DM	REVISED -	STATE OF ILLINOIS DEPARTMENT OF TRANSPORTATION	ITS INFRASTRUCTURE DETAILS CONDUIT ATS – ROCK RUN CREEK
		DRAWN - JM	REVISED -		
	PLOT SCALE = 100.000 ' / In.	CHECKED - RL	REVISED -		
	PLOT DATE = 8/9/2023	DATE - 08/11/2023	REVISED -		SCALE: NA · SHEET 12 OF 20 SHEETS · STA. NA TO STA. NA

F.A.I. RTE.	SECTION	COUNTY	TOTAL SHEETS	SHEET NO.
I-80	FAI 80 21 STRUCTURE 7	WILL	1059	523
		CONTRACT NO. 62R28		
		ILLINOIS	FED. AID PROJECT	

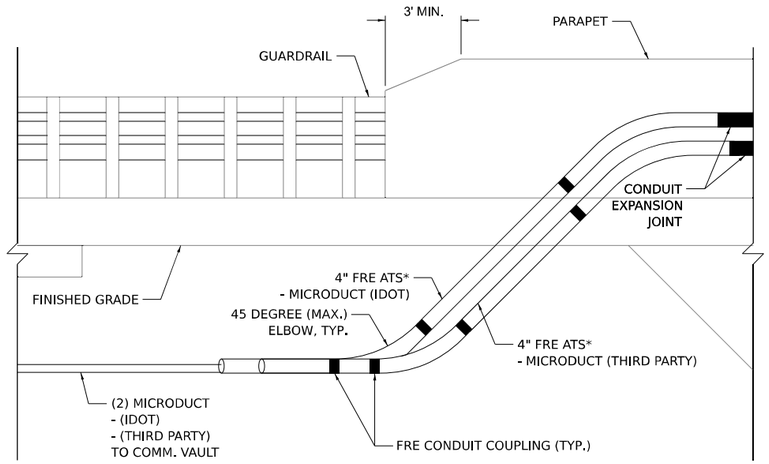

*FRE CONDUIT BELOW GRADE PAID FOR AS CONDUIT ATTACHED TO STRUCTURE

DETAIL A
I-80 EB OVER ROCK RUN CREEK
WEST END OF BRIDGE

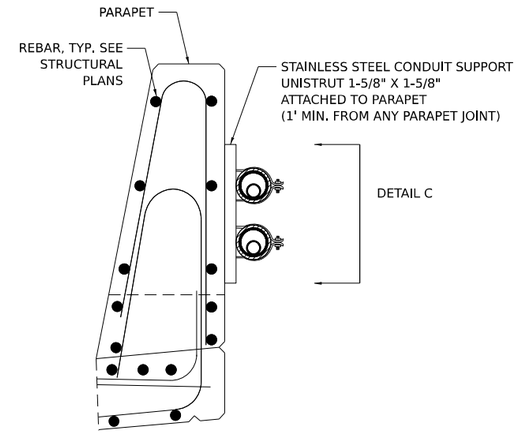

DETAIL B
I-80 EB OVER ROCK RUN CREEK
BRIDGE PARAPET CROSS SECTION

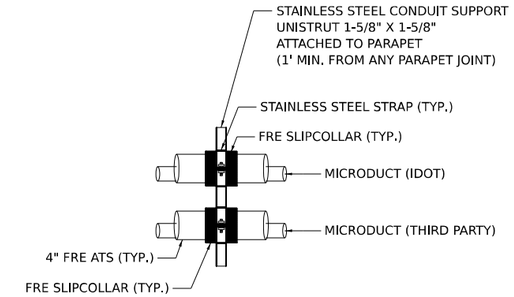

DETAIL C
I-80 EB OVER ROCK RUN CREEK
TYPICAL CONDUIT SUPPORT DETAIL

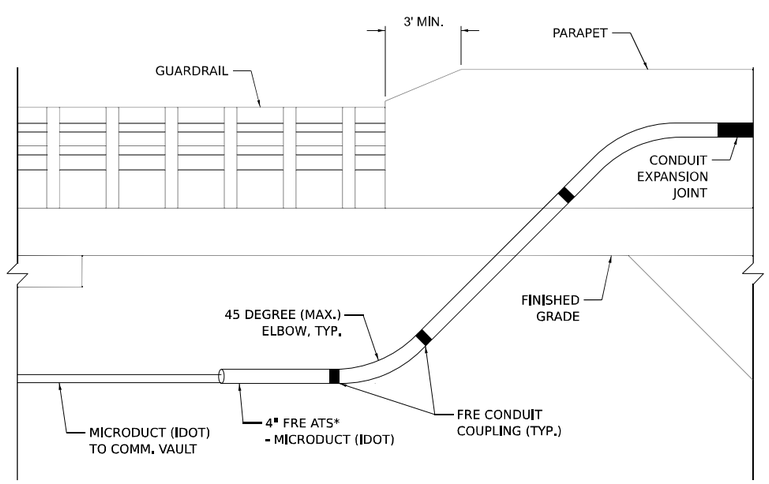

*FRE CONDUIT BELOW GRADE PAID FOR AS CONDUIT ATTACHED TO STRUCTURE

DETAIL D
I-80 WB OVER ROCK RUN CREEK
EAST END OF BRIDGE

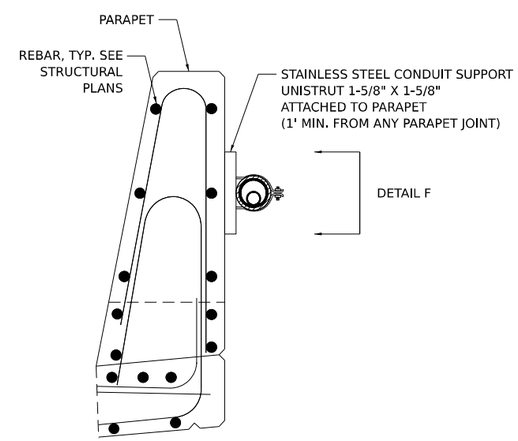

DETAIL E
I-80 WB OVER ROCK RUN CREEK
BRIDGE PARAPET CROSS SECTION

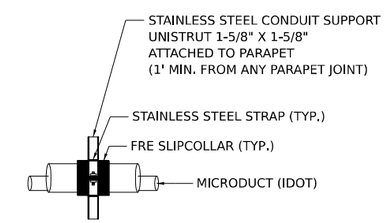

DETAIL F
I-80 WB OVER ROCK RUN CREEK
TYPICAL CONDUIT SUPPORT DETAIL

MODEL: Default
FILE NAME: pw://transystems-pw.bentley.com:transyscorp-pw1-hosted/Documents/Projects_2018/CH401/401180022/01-Siantec/CAD/ML-01_62R28/04-Sheets/07-Utilities/D162R28-ch-its-det-13.dgn

TranSmart 100 S. Wacker Drive Suite 400 Chicago, Illinois 60606	USER NAME = dmeier	DESIGNED - DM	REVISED -	STATE OF ILLINOIS DEPARTMENT OF TRANSPORTATION	ITS INFRASTRUCTURE DETAILS CONDUIT ATS – ROCK RUN CREEK
		DRAWN - JM	REVISED -		
	PLOT SCALE = 100.000 ' / In.	CHECKED - RL	REVISED -		
	PLOT DATE = 8/9/2023	DATE - 08/11/2023	REVISED -		SCALE: NA SHEET 13 OF 20 SHEETS STA. NA TO STA. NA

F.A.I. RTE.	SECTION	COUNTY	TOTAL SHEETS	SHEET NO.
I-80	FAI 80 21 STRUCTURE 7	WILL	1059	524
		CONTRACT NO. 62R28		
		ILLINOIS	FED. AID PROJECT	

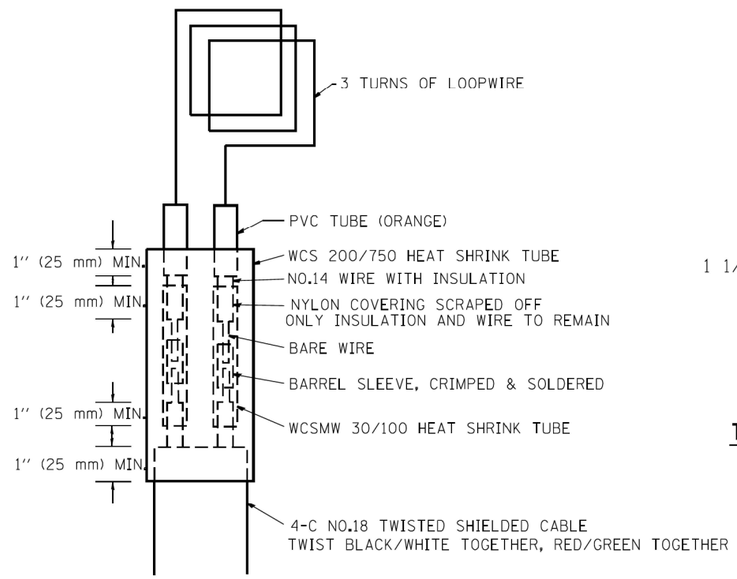

LOOP SPLICING REQUIREMENTS

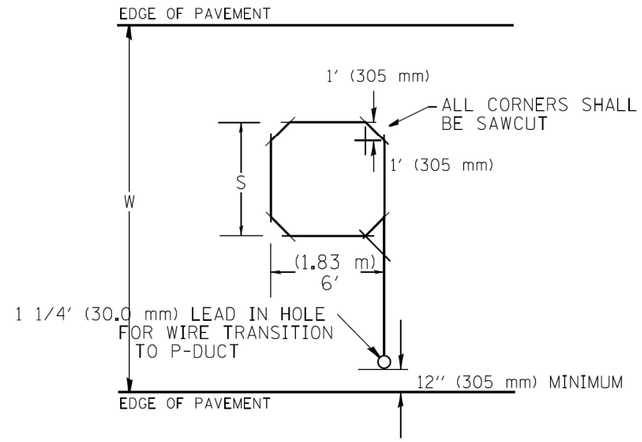

TYPICAL "S" FT. BY 6' (1.83 m) INDUCTION LOOP SAWCUT LAYOUT FOR RAMPS

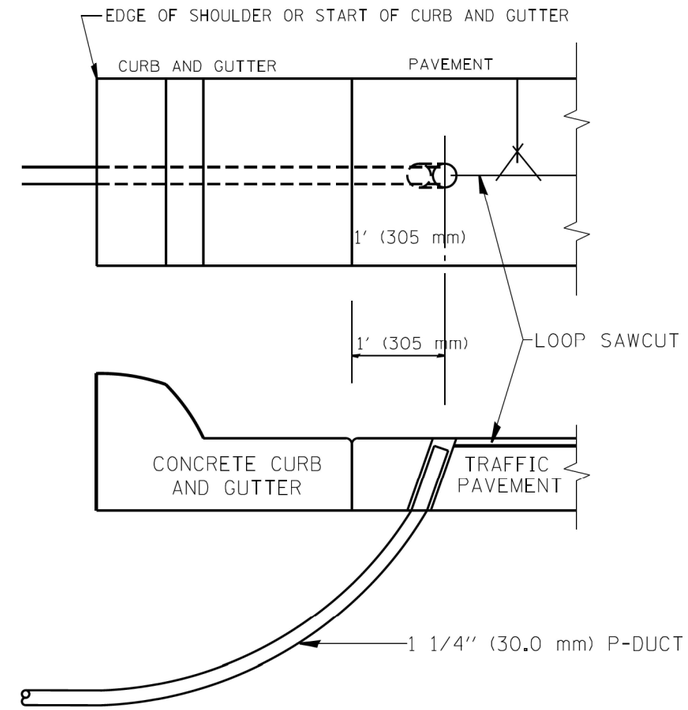

CURB AND GUTTER LOOP LEAD-IN TRANSITION DETAIL

TABLE 1	
WIDTH (W)	WIDTH (S)
12' (3.7 m)	8' (2.5 m)
13' (4.0 m)	9' (2.8 m)
14' (4.3 m)	10' (3.1 m)
15' (4.6 m)	11' (3.4 m)
16' (4.9 m)	12' (3.7 m)
17' (5.2 m)	13. (4.0 m)
18' (5.5 m)	14' (4.3 m)
19' (5.8 m)	15' (4.6 m)
20' (6.1 m)	18' (4.9 m)
21' (6.4 m)	17' (5.2 m)
22' (6.7 m)	18' (5.5 m)
23' (7.0 m)	19' (5.8 m)
24' (7.3 m)	20' (6.1 m)
25' (7.6 m)	21' (6.4 m)

NOTES

1. EACH LOOP SHALL BE SPLICED TO A 4-C NO.18 TWISTED SHIELDED LEAD IN WHEN 150' (45 m) OR MORE FROM CABINET.
2. LOOPS SHALL BE SPLICED IN HANDHOLES ONLY, OTHERWISE WRITTEN PERMISSION SHALL BE OBTAINED FROM TSC ENGINEER.
3. LOOPS SHALL NOT BE SPLICED IN SERIES.
4. EACH LOOP LEAD IN SHALL BE IDENTIFIED AND PERMANENTLY COLOR CODED IN THE COREHOLE, HANDHOLE & CABINETS THRU WHICH THEY ENTER OR PASS AND TAGGED WITH THE CORRECT NOMENCLATURES.

FILE NAME = c:\pw_work\pwidot\mezag\d0287541\TSCTYP.dgn	USER NAME = mezag	DESIGNED - R.L.	REVISED - 6/94	STATE OF ILLINOIS DEPARTMENT OF TRANSPORTATION TRAFFIC SYSTEMS CENTER	RECTANGULAR INDUCTION LOOP TYPICAL
		DRAWN - G.M.	REVISED - 11/95		
	PLOT SCALE = 100.0000 ' / in.	CHECKED - R.L.	REVISED - 05/96		
	PLOT DATE = 2/7/2013	DATE - 6-22-94	REVISED - 10/96		SCALE: NONE SHEET NO. OF SHEETS STA. TO STA.

F.A. RTE.	SECTION	COUNTY	TOTAL SHEETS	SHEET NO.
		CONTRACT NO.		
FED. ROAD DIST. NO.	ILLINOIS	FED. AID PROJECT		

TRAFFIC SYSTEMS CENTER (TY-1TSC-418#3)

TSCTYP.dgn 2/7/2013 9:30:20 AM User=mezag

TranSmart 100 S. Wacker Drive Suite 400 Chicago, Illinois 60606	USER NAME = dmeier	DESIGNED - DM	REVISED -	STATE OF ILLINOIS DEPARTMENT OF TRANSPORTATION	ITS INFRASTRUCTURE DETAILS INDUCTION LOOP – TSC STANDARD 418#3
		DRAWN - DM	REVISED -		
	PLOT SCALE = 100.000 ' / in.	CHECKED - RL	REVISED -		
	PLOT DATE = 8/9/2023	DATE - 08/11/2023	REVISED -		SCALE: 1"=50' SHEET 14 OF 20 SHEETS STA. NA TO STA. NA

F.A.I. RTE.	SECTION	COUNTY	TOTAL SHEETS	SHEET NO.
I-80	FAI 80 21 STRUCTURE 7	WILL	1059	525
		CONTRACT NO. 62R28		
	ILLINOIS	FED. AID PROJECT		

MODEL: Default
FILE NAME: pw://transystems-pw.bentley.com:transyscorp-pw1-hosted/Documents/Projects_2018/CH401/401180022/01-Stantec/CAD/ML-04_62R28/04-Sheets/07-Utilities/D162R28-alt-its-det-14.dgn

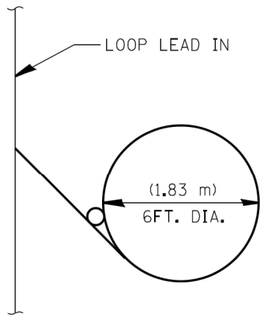

TYPICAL LOOP SAWCUT LAYOUT

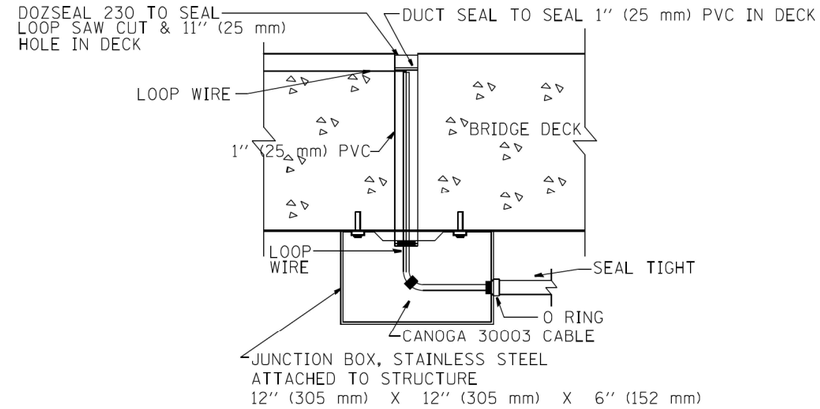

LOOP JUNCTION BOX UNDER BRIDGE DECK

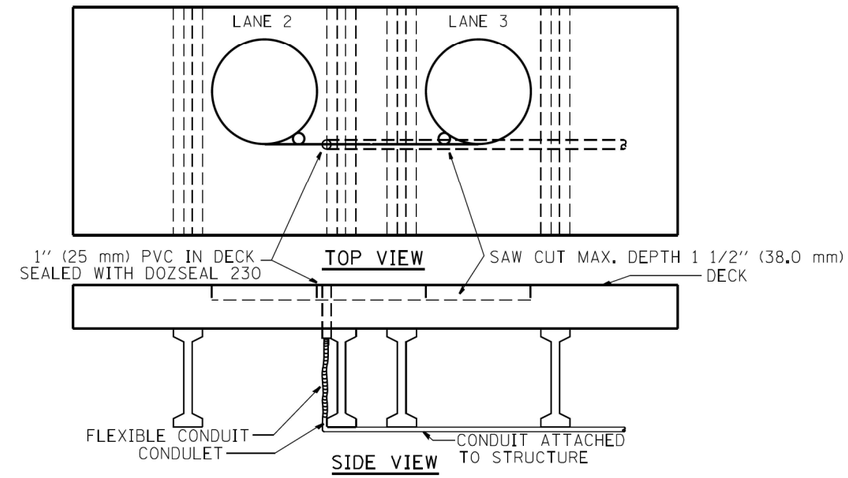

LOOP TRANSITION IN BRIDGE DECK

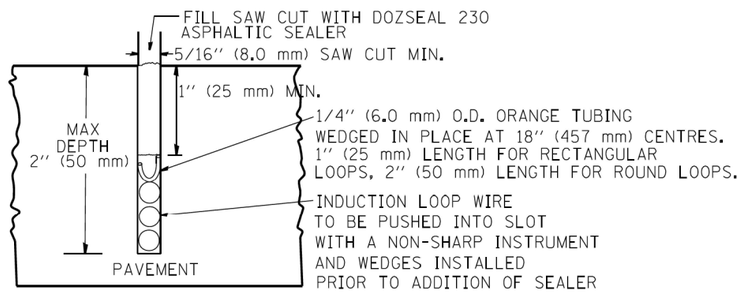

LOOP CROSS SECTION IN PAVEMENT

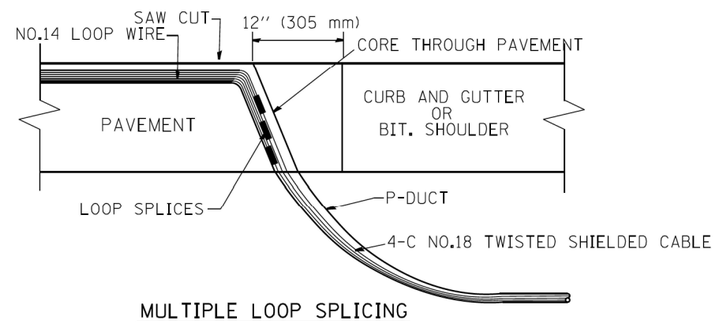

MULTIPLE LOOP SPLICING

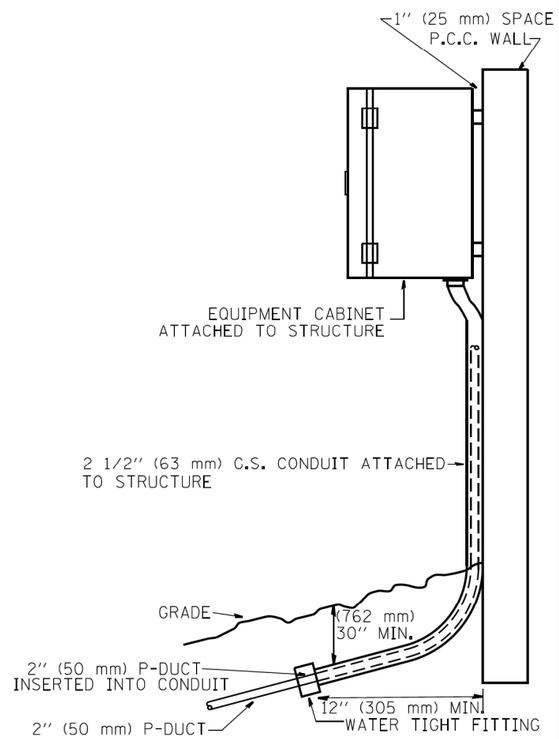

POLYETHYLENE DUCT/GS. CONDUIT TRANSITION

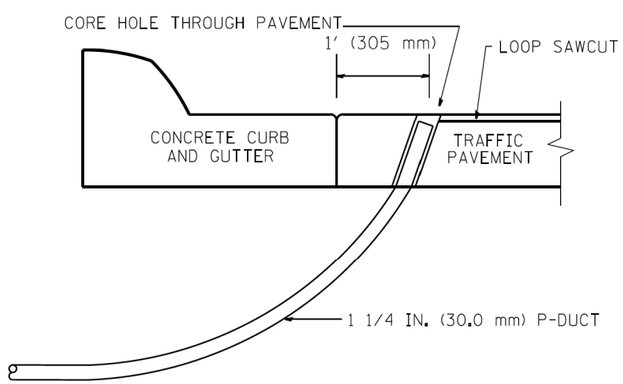

SIDE SECTION LOOP LEAD-IN
TRANSITION DETAIL

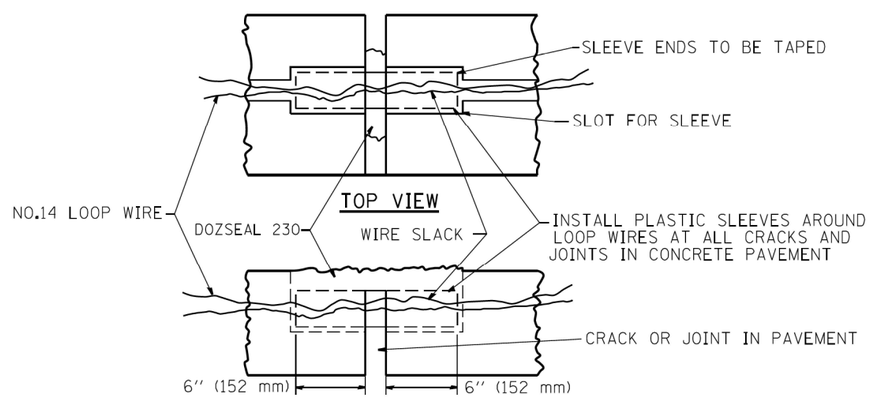

SIDE SECTION
PAVEMENT CRACK TRANSVERSE SLEEVE

FILE NAME = c:\pw_work\pwidot\mezag\d0287541\TSCTYP.dgn	USER NAME = mezag	DESIGNED - R.L.	REVISED - 06/94	STATE OF ILLINOIS DEPARTMENT OF TRANSPORTATION TRAFFIC SYSTEMS CENTER	LOOP, CONDUIT & DUCT INSTALLATION DETAILS	F.A. RTE.	SECTION	COUNTY	TOTAL SHEETS	SHEET NO.
	PLOT SCALE = 100.0000 ' / in.	DRAWN - G.M.	REVISED - 03/95					CONTRACT NO.		
	PLOT DATE = 2/7/2013	CHECKED - R.L.	REVISED - 11/95			FED. ROAD DIST. NO.	ILLINOIS	FED. AID PROJECT		
		DATE - 06/22/94	REVISED - 10/96		SCALE: NONE SHEET NO. OF SHEETS STA. TO STA.					

TRAFFIC SYSTEMS CENTER (TY-1TSC-418#4)

TSCTYP.dgn 2/7/2013 9:31:19 AM User=mezag

MODEL: Default
FILE NAME: pw://transystems-pw.bentley.com:transyscorp-pw1-hosted/Documents/Projects_2018/CH401/401180022/01-Stantec/CAD/ML-04 62R28/04-Sheets/07-Utilities/D162R28-sht-its-dec-15.dgn

TranSmart
100 S. Wacker Drive Suite 400
Chicago, Illinois 60606

USER NAME = dmeier	DESIGNED - DM	REVISED -	STATE OF ILLINOIS DEPARTMENT OF TRANSPORTATION	ITS INFRASTRUCTURE DETAILS INDUCTION LOOP – TSC STANDARD 418#4	F.A.I. RTE.	SECTION	COUNTY	TOTAL SHEETS	SHEET NO.
	DRAWN - DM	REVISED -			I-80	FAI 80 21 STRUCTURE 7	WILL	1059	526
PLOT SCALE = 100.000 ' / in.	CHECKED - RL	REVISED -					CONTRACT NO. 62R28		
PLOT DATE = 8/9/2023	DATE - 08/11/2023	REVISED -		SCALE: 1"=50' SHEET 15 OF 20 SHEETS STA. NA TO STA. NA			ILLINOIS	FED. AID PROJECT	

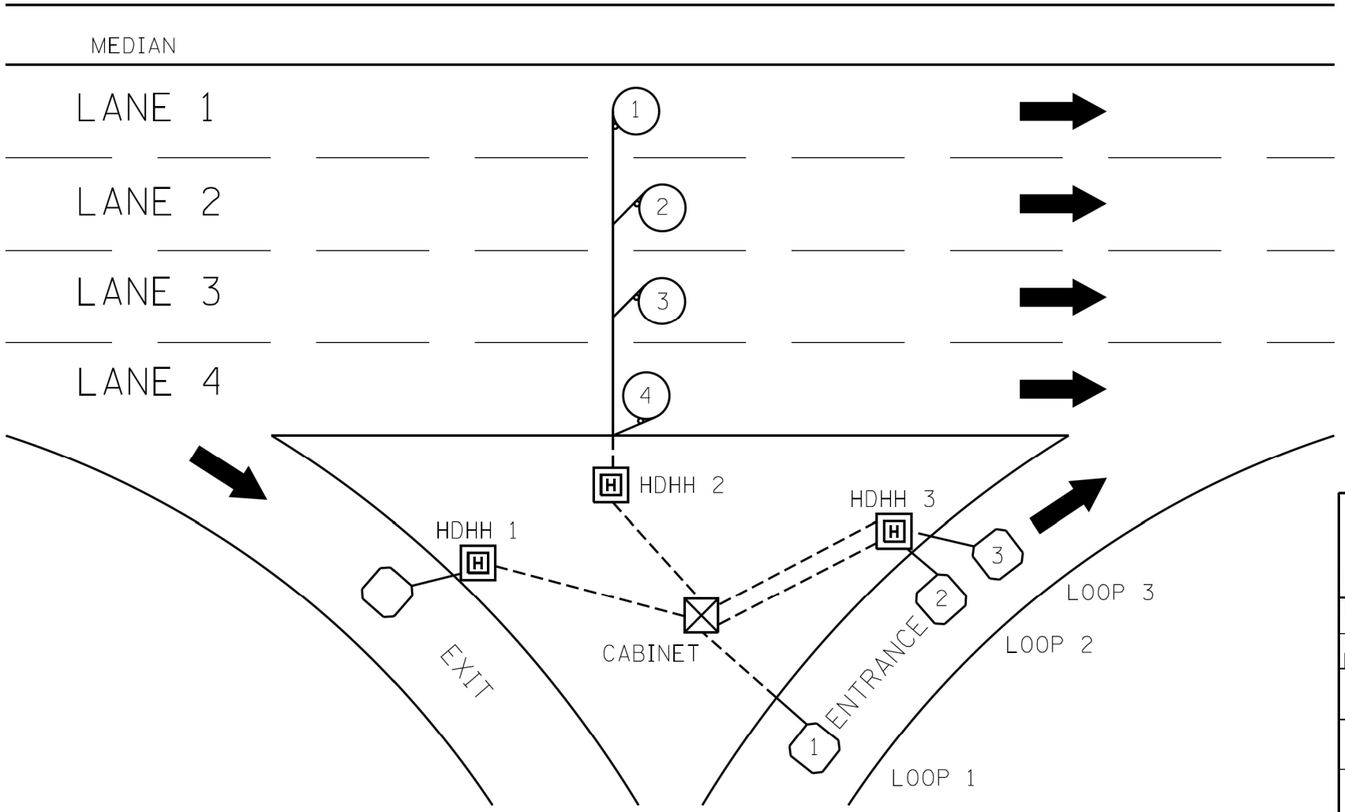

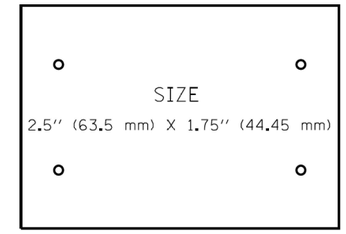

SUGGESTED TAG
PANDUIT
#MP25OW175-C
OR EQUIVALENT

HDHH 1 EXAMPLE

IB-EB EXIT
CCW IN/
TO CABINET #____

HDHH 2 EXAMPLE

IB (OB) LANE #__
CCW /OUT
TO CABINET #____

HDHH 3 EXAMPLE

IB-EB ENT.
LOOP #2
CW IN/

NOTE:
EACH LOOP WIRE SHALL BE TAGGED AS ''IN'' OR ''OUT'' AND ''CW'' OR ''CCW''. SHIELDED CABLE WILL BE TAGGED IN EACH HANDHOLE AND CABINET TO MATCH THE CABLE LOG.

LOOP ANALYZER

LOCATION_____ DATE_____

LOOP LOCATION LANE DIRECTION	LOOP WIRE MARKED AND CODED	LOOP SIZE	FREQ. INDUCTANCE	INSULATION	LOOP RESISTANCE

FILE NAME = c:\pw_work\pwidot\mezag\d0287541\TSCTYP.dgn	USER NAME = mezag	DESIGNED - R.L.	REVISED - 6/94	STATE OF ILLINOIS DEPARTMENT OF TRANSPORTATION TRAFFIC SYSTEMS CENTER	LOOP STATUS REPORT	F.A. RTE.	SECTION	COUNTY	TOTAL SHEETS	SHEET NO.
		DRAWN - G.M.	REVISED - 10/96							
	PLOT SCALE = 100.0000 ' / in.	CHECKED - R.L.	REVISED -					CONTRACT NO.		
	PLOT DATE = 2/7/2013	DATE - 6-27-94	REVISED -		SCALE: NONE SHEET NO. OF SHEETS STA. TO STA.	FED. ROAD DIST. NO.	ILLINOIS	FED. AID PROJECT		

TSCTYP.dgn 2/7/2013 9:35:02 AM User=mezag

TRAFFIC SYSTEMS CENTER (TY-1TSC-418#7)

MODEL: Default
FILE NAME: pw://transystems-pw.bentley.com:transyscorp-pw1-hosted/Documents/Projects_2018/CH401/401180022/01-Slantec/CAD/ML-04 62R28/04-Sheets/07-Utilities/D162R28-sht-its-det-16.dgn

TranSmart
100 S. Wacker Drive Suite 400
Chicago, Illinois 60606

USER NAME = dmeier	DESIGNED - DM	REVISED -	STATE OF ILLINOIS DEPARTMENT OF TRANSPORTATION	ITS INFRASTRUCTURE DETAILS INDUCTION LOOP – TSC STANDARD 418#7	F.A.I. RTE.	SECTION	COUNTY	TOTAL SHEETS	SHEET NO.
	DRAWN - DM	REVISED -			I-80	FAI 80 21 STRUCTURE 7	WILL	1059	527
PLOT SCALE = 100.000 ' / in.	CHECKED - RL	REVISED -					CONTRACT NO. 62R28		
PLOT DATE = 8/9/2023	DATE - 08/11/2023	REVISED -		SCALE: 1"=50' SHEET 16 OF 20 SHEETS STA. NA TO STA. NA		ILLINOIS	FED. AID PROJECT		

DISTRIBUTION CABLE FIBER ASSIGNMENTS				ORIGINATION			
TRUNK CABLE DESIGNATION		TCF-		DESTINATION			
BUFFER TUBE	FIBER	FIBER NO	ASSIGNMENT	BUFFER TUBE	FIBER NO	FIBER NO	ASSIGNMENT
BLUE	Blue 1	1		SLATE	Blue 1	49	
	Orange 2	2			Orange 2	50	
	Green 3	3			Green 3	51	
	Brown 4	4			Brown 4	52	
	Slate 5	5			Slate 5	53	
	White 6	6			White 6	54	
	Red 7	7			Red 7	55	
	Black 8	8			Black 8	56	
	Yellow 9	9			Yellow 9	57	
	Violet 10	10			Violet 10	58	
	Rose 11	11			Rose 11	59	
	Aqua 12	12			Aqua 12	60	
ORANGE	Blue 1	13		WHITE	Blue 1	61	
	Orange 2	14			Orange 2	62	
	Green 3	15			Green 3	63	
	Brown 4	16			Brown 4	64	
	Slate 5	17			Slate 5	65	
	White 6	18			White 6	66	
	Red 7	19			Red 7	67	
	Black 8	20			Black 8	68	
	Yellow 9	21			Yellow 9	69	
	Violet 10	22			Violet 10	70	
	Rose 11	23			Rose 11	71	
	Aqua 12	24			Aqua 12	72	
GREEN	Blue 1	25		RED	Blue 1	73	
	Orange 2	26			Orange 2	74	
	Green 3	27			Green 3	75	
	Brown 4	28			Brown 4	76	
	Slate 5	29			Slate 5	77	
	White 6	30			White 6	78	
	Red 7	31			Red 7	79	
	Black 8	32			Black 8	80	
	Yellow 9	33			Yellow 9	81	
	Violet 10	34			Violet 10	82	
	Rose 11	35			Rose 11	83	
	Aqua 12	36			Aqua 12	84	
BROWN	Blue 1	37		BLACK	Blue 1	85	
	Orange 2	38			Orange 2	86	
	Green 3	39			Green 3	87	
	Brown 4	40			Brown 4	88	
	Slate 5	41			Slate 5	89	
	White 6	42			White 6	90	
	Red 7	43			Red 7	91	
	Black 8	44			Black 8	92	
	Yellow 9	45			Yellow 9	93	
	Violet 10	46			Violet 10	94	
	Rose 11	47			Rose 11	95	
	Aqua 12	48			Aqua 12	96	

DISTRIBUTION CABLE FIBER ASSIGNMENTS				ORIGINATION			
DISTRIBUTION CABLE DESIGNATION		DCF-		DESTINATION			
BUFFER TUBE	FIBER	FIBER NO	ASSIGNMENT	BUFFER TUBE	FIBER NO	FIBER NO	ASSIGNMENT
BLUE	Blue 1	1		SLATE	Blue 1	49	
	Orange 2	2			Orange 2	50	
	Green 3	3			Green 3	51	
	Brown 4	4			Brown 4	52	
	Slate 5	5			Slate 5	53	
	White 6	6			White 6	54	
	Red 7	7			Red 7	55	
	Black 8	8			Black 8	56	
	Yellow 9	9			Yellow 9	57	
	Violet 10	10			Violet 10	58	
	Rose 11	11			Rose 11	59	
	Aqua 12	12			Aqua 12	60	
ORANGE	Blue 1	13		WHITE	Blue 1	61	
	Orange 2	14			Orange 2	62	
	Green 3	15			Green 3	63	
	Brown 4	16			Brown 4	64	
	Slate 5	17			Slate 5	65	
	White 6	18			White 6	66	
	Red 7	19			Red 7	67	
	Black 8	20			Black 8	68	
	Yellow 9	21			Yellow 9	69	
	Violet 10	22			Violet 10	70	
	Rose 11	23			Rose 11	71	
	Aqua 12	24			Aqua 12	72	
GREEN	Blue 1	25		RED	Blue 1	73	
	Orange 2	26			Orange 2	74	
	Green 3	27			Green 3	75	
	Brown 4	28			Brown 4	76	
	Slate 5	29			Slate 5	77	
	White 6	30			White 6	78	
	Red 7	31			Red 7	79	
	Black 8	32			Black 8	80	
	Yellow 9	33			Yellow 9	81	
	Violet 10	34			Violet 10	82	
	Rose 11	35			Rose 11	83	
	Aqua 12	36			Aqua 12	84	
BROWN	Blue 1	37		BLACK	Blue 1	85	
	Orange 2	38			Orange 2	86	
	Green 3	39			Green 3	87	
	Brown 4	40			Brown 4	88	
	Slate 5	41			Slate 5	89	
	White 6	42			White 6	90	
	Red 7	43			Red 7	91	
	Black 8	44			Black 8	92	
	Yellow 9	45			Yellow 9	93	
	Violet 10	46			Violet 10	94	
	Rose 11	47			Rose 11	95	
	Aqua 12	48			Aqua 12	96	

LATERAL CABLE FIBER ASSIGNMENTS

LCF-

FIBER NO	FUNCTION	CONNECTION
1		
2		
3		
4		
5		
6		
7		
8		
9		
10		
11		
12		

LATERAL CABLE FIBER ASSIGNMENTS

LCF-

FIBER NO	FUNCTION	CONNECTION
1		
2		
3		
4		
5		
6		
7		
8		
9		
10		
11		
12		

LATERAL CABLE FIBER ASSIGNMENTS

LCF-

FIBER NO	FUNCTION	CONNECTION
1		
2		
3		
4		
5		
6		
7		
8		
9		
10		
11		
12		

LATERAL CABLE FIBER ASSIGNMENTS

LCF-

FIBER NO	FUNCTION	CONNECTION
1		
2		
3		
4		
5		
6		
7		
8		
9		
10		
11		
12		

MODEL: Default
FILE NAME: pw://transystems-pw.bentley.com:transyscorp-pw1-hosted/Documents/Projects_2018/CH401/401180022/01-Stantec/CAD/ML-04_62R28/04-Sheets/07-Utilities/D162R28-sht-its-det-19.dgn

TranSmart
100 S. Wacker Drive Suite 400
Chicago, Illinois 60606

USER NAME = dmeier	DESIGNED - DM	REVISED -
	DRAWN - DM	REVISED -
PLOT SCALE = 100.000 ' / in.	CHECKED - RL	REVISED -
PLOT DATE = 8/9/2023	DATE - 08/11/2023	REVISED -

STATE OF ILLINOIS
DEPARTMENT OF TRANSPORTATION

ITS INFRASTRUCTURE DETAILS
I–55 LATERAL CABLE FIBER ASSIGNMENTS

SCALE: NONE | SHEET 19 OF 20 SHEETS | STA. NA TO STA. NA

F.A.I. RTE.	SECTION	COUNTY	TOTAL SHEETS	SHEET NO.
I-80	FAI 80 21 STRUCTURE 7	WILL	1059	530
	BE–2120	CONTRACT NO. 62R28		
	ILLINOIS	FED. AID PROJECT		

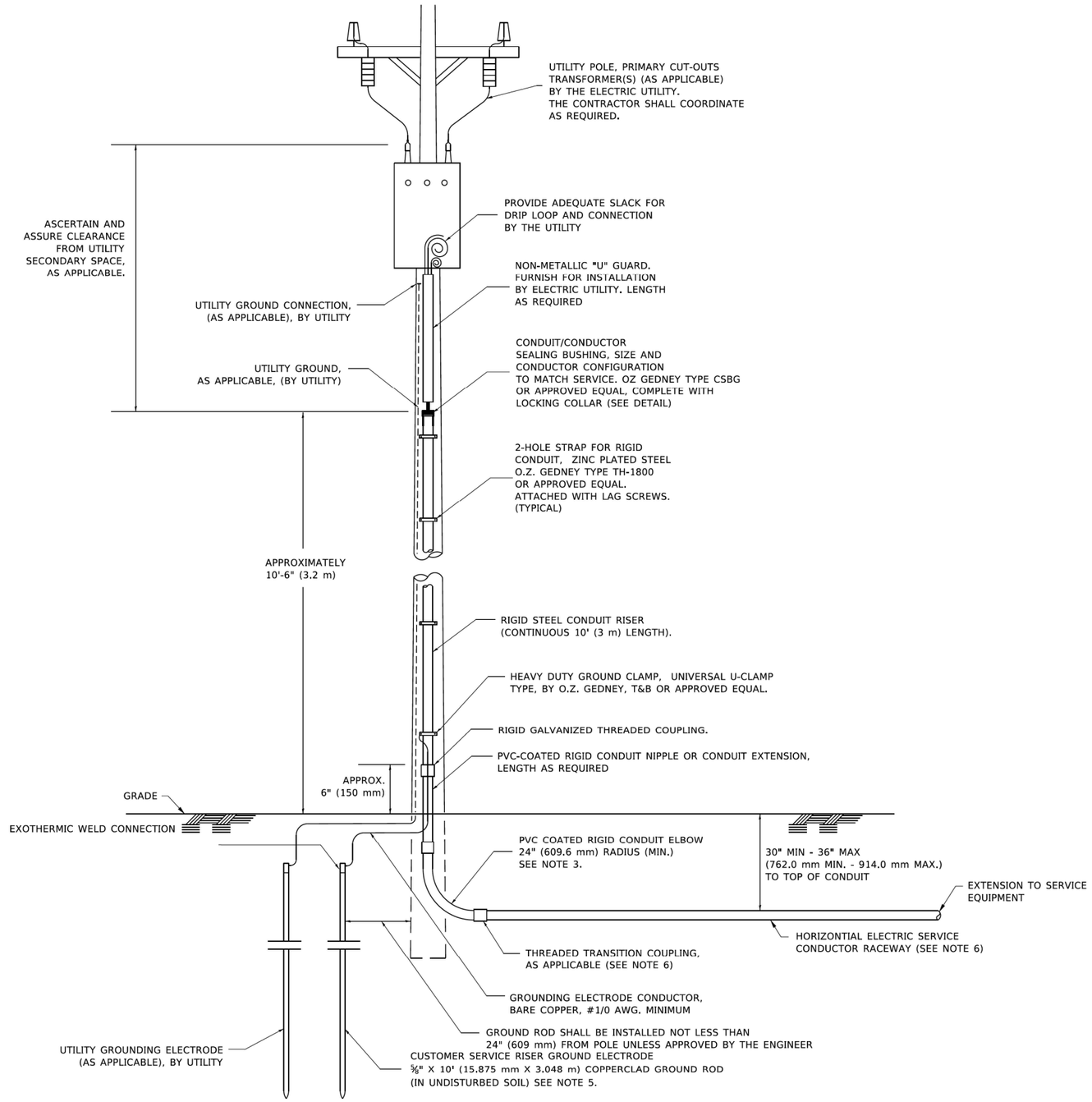

APPLICATION

THIS DETAIL APPLIES FOR LOW VOLTAGE ELECTRIC SERVICE (660 V OR LESS) FROM AN OVERHEAD UTILITY SUPPLY TO SEPERATLY-MOUNTED SERVICE EQUIPMENT.

NOTES

1. SERVICE VOLTAGE SHALL BE AS INDICATED ELSEWHERE IN THE DRAWINGS.
2. UNLESS OTHERWISE INDICATED, ITEMS AND WORK SHALL BE INCLUDED AND PAID AS PART OF THE ELECTRIC UTILITY SERVICE INSTALLATION PAY ITEM.
3. CONDUIT AND CONNECTOR DIAMETER SHALL MATCH THE DIAMETER OF THE SERVICE CONDUCTOR RACEWAY AS INDICATED ON THE PLANS.
4. PVC COATED RACEWAYS AND ACCESSORIES SHALL BE CAREFULLY INSTALLED WITH MFR RECOMMENDED TOOLS AND PROCEDURES TO AVOID DAMAGE. ANY DAMAGE SHALL BE REPAIRED WITH COMPATIBLE PVC TOUCH-UP MATERIAL TO THE SATISFACTION OF THE ENGINEER OR THE DAMAGED MATERIAL SHALL BE REPLACED AT NO ADDITIONAL COST.
5. THE CONTRACTOR SHALL OBTAIN INSPECTION AND APPROVAL BY THE ENGINEER OF SERVICE RISER GROUND ELECTRODE, RISER ELBOW, NIPPLE AND CONNECTION TO SERVICE CONDUCTOR RACEWAY EXTENSION BEFORE BACKFILL AND SHALL ALSO OBTAIN INSPECTION OF SERVICE RISER AND SEALING BUSHING BEFORE UTILITY "U" GUARD INSTALLATION AND SERVICE CONNECTION.
6. THE HORIZONTAL ELECTRIC SERVICE CONDUCTOR RACEWAY SHALL BE AS INDICATED AND SHALL BE MEASURED SEPARATELY FOR PAYMENT. WHEN THE RACEWAY IS PVC-COATED RIGID GALVANIZED STEEL, THE COUPLING SHALL BE THE SAME. WHEN THE RACEWAY IS PVC CONDUIT (IN CONCRETE), THE COUPLING SHALL BE A METALIC TO NON METALIC ADAPTER. WHEN THE RACEWAY IS ENCASED IN CONCRETE, THE CONCRETE SHALL EXTEND TO COVER THE COUPLING.
7. PLANS AND DETAILS INDICATE THE GENERAL NATURE AND REQUIREMENTS. THEY DO NOT SHOW EVERY ACCESSORY AND ATTACHMENT, AND THEY DO NOT RELIEVE THE CONTRACTOR OF THE REQUIREMENTS OF THE SPECIFICATIONS AND SPECIAL PROVISIONS TO ASCERTAIN UTILITY REQUIREMENTS AND TO COORDINATE ACCORDINGLY, FURNISHING ALL ITEMS AND WORK NOT PROVIDED BY THE UTILITY, BUT NECESSARY FOR A COMPLETE SERVICE INSTALLATION IS REQUIRED AND SHALL BE INCLUDED IN THE ELECTRIC UTILITY SERVICE INSTALLATION PAY ITEM.

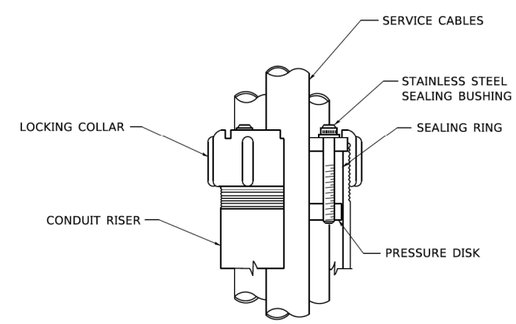

SEALING BUSHING DETAIL

MODEL: Default
FILE NAME: pw://transystems-pw.bentley.com:transyscorp-pw1-hosted/Documents/Projects_2018/CH401/401180022/01-Stantec/CAD/ML-04_62R28/04-Sheets/07-Utilities/0162R28-sht-its-dtl-20.dgn

USER NAME = footemj	DESIGNED -	REVISED - 03-03-06	STATE OF ILLINOIS DEPARTMENT OF TRANSPORTATION	ELECTRIC SERVICE INSTALLATION AERIAL, REMOTE DISCONNECT	F.A. RTE.	SECTION	COUNTY	TOTAL SHEETS	SHEET NO.
	DRAWN -	REVISED -							
PLOT SCALE = 50.0000 ' / in.	CHECKED - MEA	REVISED -			BE-220		CONTRACT NO.		
PLOT DATE = 4/19/2019	DATE -	REVISED -		SCALE: NONE SHEET 1 OF 1 SHEETS STA. TO STA.		ILLINOIS	FED. AID PROJECT		

be220.dgn 6/19/2019 2:14:18 PM User=footemj

MODEL: Default
FILE NAME: pw://transystems-pw.bentley.com:transyscorp-pw1-hosted/Documents/Projects_2018/CH401/401180022/01-Stantec/CAD/ML-04_62R28/04-Sheets/07-Utilities/0162R28-sht-its-dtl-20.dgn

TranSmart
100 S. Wacker Drive Suite 400
Chicago, Illinois 60606

USER NAME = dmeier	DESIGNED - DM	REVISED -	STATE OF ILLINOIS DEPARTMENT OF TRANSPORTATION	IDOT D1 STANDARD BE-220	F.A.I. RTE.	SECTION	COUNTY	TOTAL SHEETS	SHEET NO.
	DRAWN - DM	REVISED -			I-80	FAI 80 21 STRUCTURE 7	WILL	1059	531
PLOT SCALE = 100.000 ' / in.	CHECKED - RL	REVISED -					CONTRACT NO. 62R28		
PLOT DATE = 8/9/2023	DATE - 08/11/2023	REVISED -		SCALE: NA SHEET 20 OF 20 SHEETS STA. NA TO STA. NA		ILLINOIS	FED. AID PROJECT		

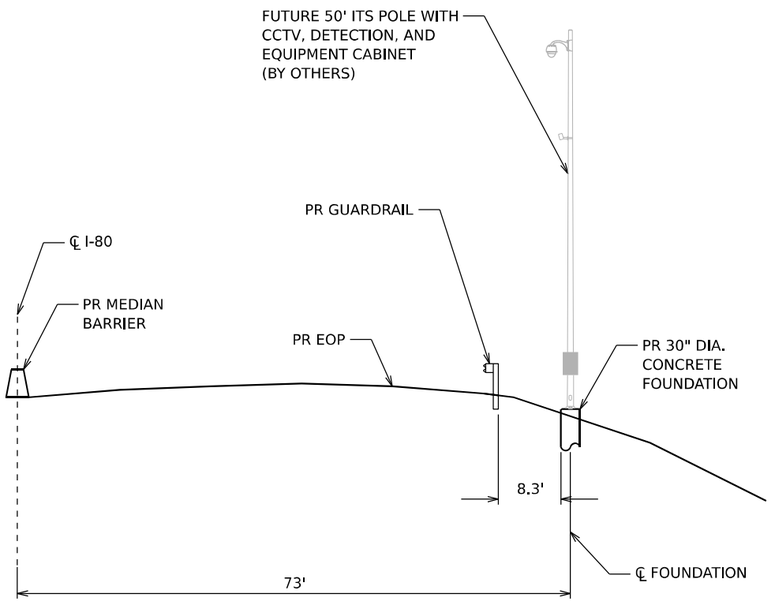

STA 316+00
(LOOKING EAST)
30" DIA. CONCRETE FOUNDATION

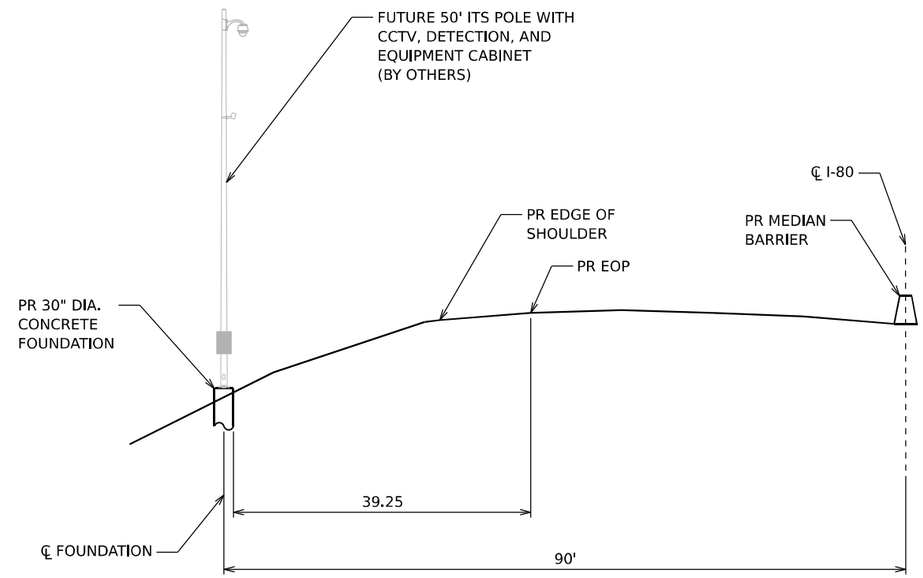

STA 343+00
(LOOKING EAST)
30" DIA. CONCRETE FOUNDATION

MODEL: Default
FILE NAME: pw://transystems-pw.bentley.com:transyscorp-pw1-hosted/Documents/Projects_2018/CH401/401180022/01-Stantec/CAD/ML-04 62R28/04-Sheets/07-Utilities/D162R28-sht-its-xs-01.dgn

exp.

USER NAME = SuiC	DESIGNED - CS	REVISED -	
	DRAWN - CS	REVISED -	
PLOT SCALE = 100.000 ' / in.	CHECKED - BRH	REVISED -	
PLOT DATE = 8/16/2023	DATE - 05/26/2023	REVISED -	

STATE OF ILLINOIS
DEPARTMENT OF TRANSPORTATION

ITS CROSS SECTIONS

SCALE: NA | SHEET 1 OF 2 SHEETS | STA. NA | TO STA. NA

F.A.I. RTE.	SECTION	COUNTY	TOTAL SHEETS	SHEET NO.
I-80	FAI 80 21 STRUCTURE 7	WILL	1059	532
		CONTRACT NO. 62R28		
		ILLINOIS	FED. AID PROJECT	

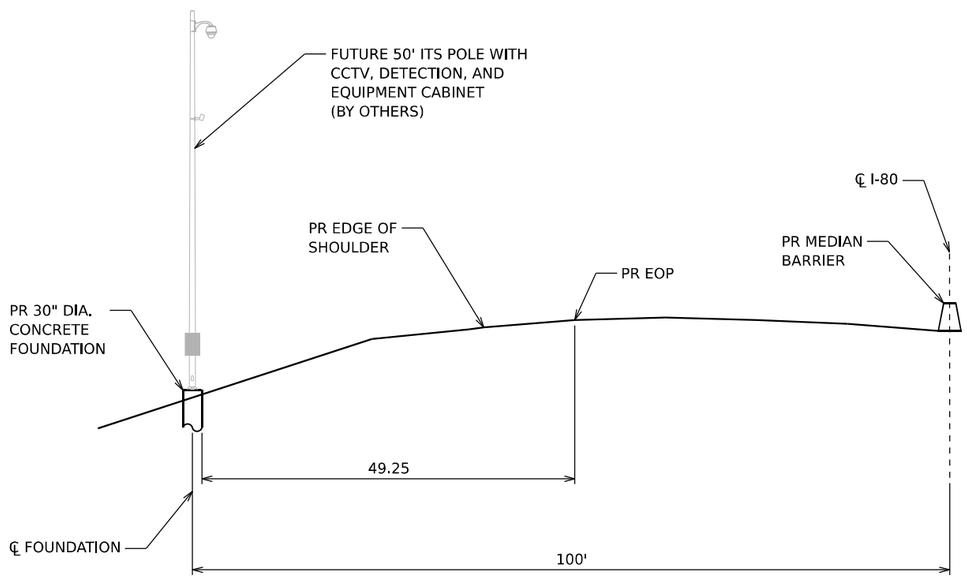

STA 369+25
(LOOKING EAST)
30" DIA. CONCRETE FOUNDATION

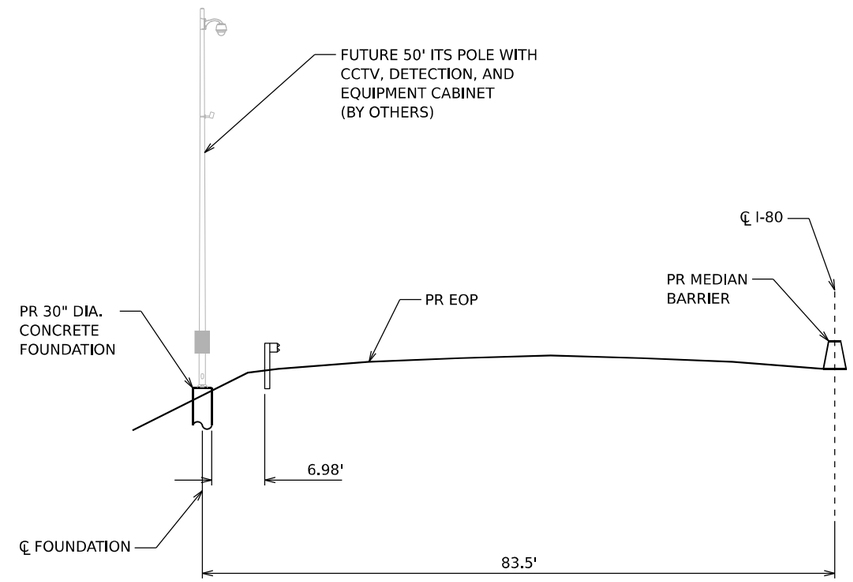

STA 385+00
(LOOKING EAST)
30" DIA. CONCRETE FOUNDATION

MODEL: Default
FILE NAME: pw://transystems-pw.bentley.com:transyscorp-pw1-hosted/Documents/Projects_2018/CH401/401180022/01-Stanice/CAD/MI-04 62R28/04-Sheets/07-Utilities/D162R28-sht-its-xs-02.dgn

exp.	USER NAME = SuiC	DESIGNED - CS	REVISED -	STATE OF ILLINOIS DEPARTMENT OF TRANSPORTATION	ITS CROSS SECTIONS
		DRAWN - CS	REVISED -		
	PLOT SCALE = 100.000 ' / in.	CHECKED - BRH	REVISED -		
	PLOT DATE = 8/16/2023	DATE - 05/26/2023	REVISED -		SCALE: NA · SHEET 2 OF 2 SHEETS · STA. NA TO STA. NA

F.A.I. RTE.	SECTION	COUNTY	TOTAL SHEETS	SHEET NO.
I-80	FAI 80 21 STRUCTURE 7	WILL	1059	533
		CONTRACT NO. 62R28		
		ILLINOIS	FED. AID PROJECT	

Benchmark: Set 2" CWA aluminum disc at top of concrete parapet wall at SE corner of eastbound I-80 Bridge over DuPage River. Elevation 568.745.

Existing Structure: S.N.s 099-0040 (EB) and 099-0041 (WB) were originally constructed in 1960 as 5-Span dual bridges with no skew carrying two lanes of eastbound, and two lanes of westbound, I-80 traffic over the DuPage River (F.A.I. Route I-80; FA Project I-80-4 (9); Section 99-1B). In 1982, the structures were widened by adding an additional beam line along the outside edges of existing roadway (F.A.I. Route 80, Proj. I-IR-80-4 (140) 123; Section 99-1B-BR-79) and in 2008, typical repairs including expansion joint replacement, deck slab repairs, bridge deck scarification and overlay placement, and substructure repairs were performed (F.A.I. Route 80; C-91-084-08; Section 99-1-B-I-2). The bridges have an overall length of approximately 292'-9" (Back-to-Back Abutments), an overall width of approximately 45'-2" (Out-to-Out deck) and consist of a 7"- thick reinforced concrete deck with 2¼" latex concrete overlay. The existing deck is supported by seven (7) - 42" PPC I-Beams at 6'-4" to 6'-6" center-to-center spacing. The substructures consist of reinforced concrete stub abutments on battered and straight steel piles on bedrock and reinforced concrete solid wall piers with spread footings on rock. The structures will be removed and replaced. Traffic will be maintained utillzing staged construction.

Salvage: No Salvage.

APPROVED
For Structural Adequacy Only
Engineer of Bridges & Structures

STATE OF ILLINOIS
MOUSSA A. ISSA
081-005738
CHICAGO, ILLINOIS
LICENSED STRUCTURAL ENGINEER

Signed Moussa A. Issa
Dr. Moussa A. Issa, S.E. IL. Lic. No. 081-005738
Expires 11-30-2024
Date 09/08/2023 For Sheets SA-01 Thru SA-98 .

DESIGN SPECIFICATIONS

2020 AASHTO LRFD Bridge Design Specifications, 9th Edition

SEISMIC DATA

Seismic Performance Zone (SPZ) = 1
Design Spectral Acceleration at 1.0 sec. (SD1) = 0.068g
Design Spectral Acceleration at 0.2 sec. (SDS) = 0.127g
Soil Site Class = C

LOADING HL-93

Allow 50#/sq. ft. for future wearing surface.

DESIGN STRESSES

FIELD UNITS
f'c = 3,500 psi (Substructure)
f'c = 4,000 psi (Superstructure)
fy = 60,000 psi (Reinforcement)
fy = 50,000 psi (M270 Grade 50)

PRECAST PRESTRESSED UNITS
f'c = 8,500 psi
f'ci = 6,500 psi
fpu = 270,000 psi (0.6" ∅ low lax. strands)
fpbt = 202,300 psi (0.6" ∅ low lax. strands)

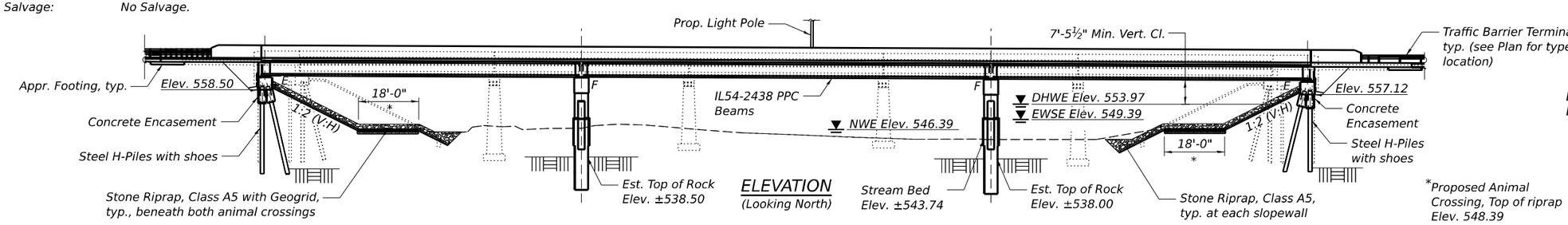

ELEVATION
(Looking North)

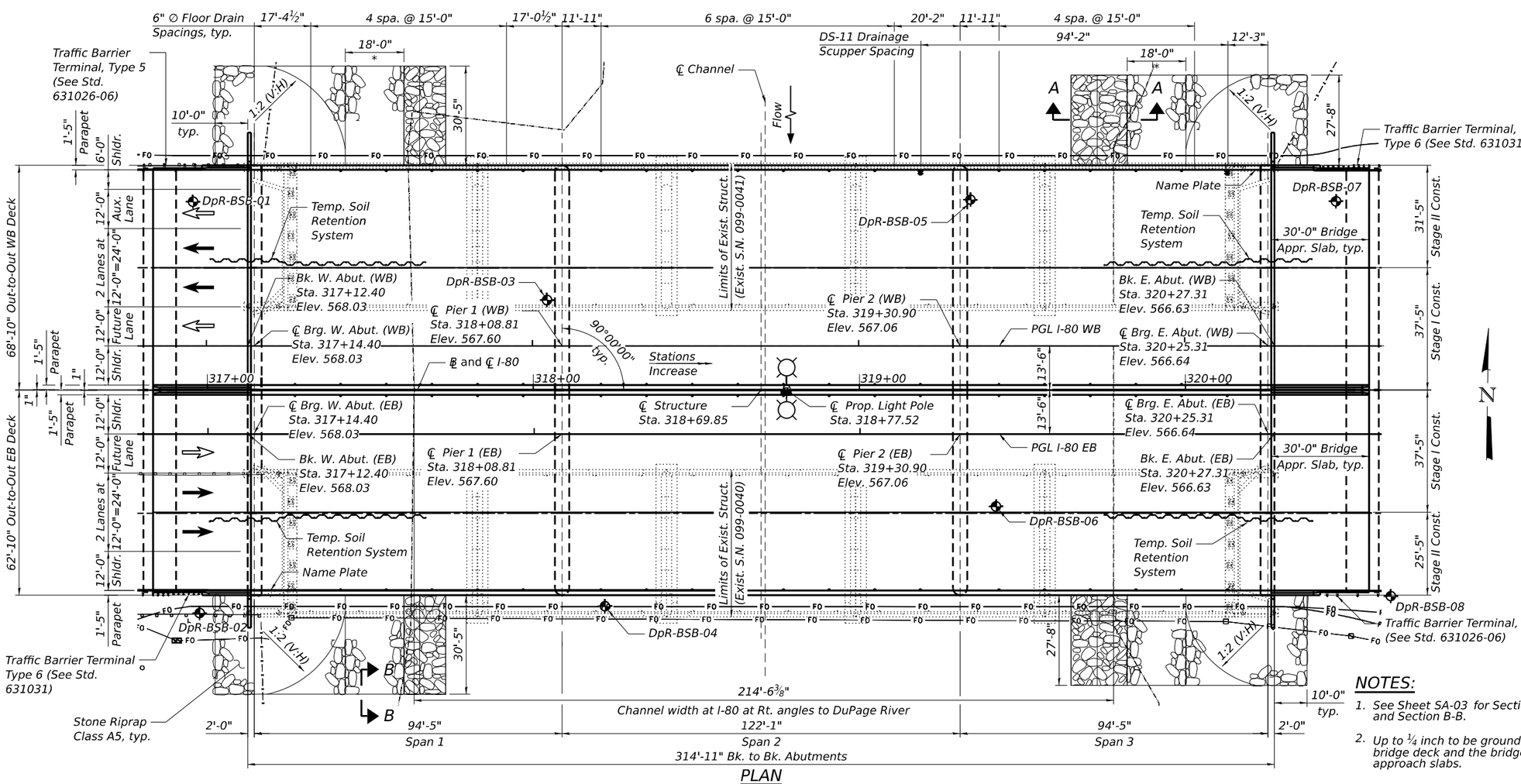

PLAN

LEGEND:

- Exist. Fiber Optic Line, to be relocated
- Prop. Fiber Optic Line
- Exist. Fence
- Exist. Guardrail, to be removed
- Soil Boring
- Temp. Soil Retention System
- Proposed Light Pole

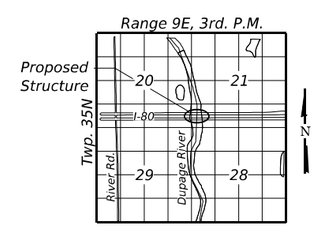

LOCATION SKETCH

NOTES:

1. See Sheet SA-03 for Section A-A and Section B-B.
2. Up to ¼ inch to be ground off the bridge deck and the bridge approach slabs.

GENERAL PLAN AND ELEVATION
I-80 EB/WB OVER DUPAGE RIVER
F.A.I. RTE. I-80
SECTION FAI 80 21 STRUCTURE 7
WILL COUNTY
STA. 318+69.85
STRUCTURE NO. 099-8312 (EB)
STRUCTURE NO. 099-8313 (WB)

HBM ENGINEERING GROUP, LLC

USER NAME =	DESIGNED - JJS, PG	REVISED -	
	CHECKED - MI, JJS	REVISED -	
PLOT SCALE =	DRAWN - PG	REVISED -	
PLOT DATE =	CHECKED - MI, JJS	REVISED -	

STATE OF ILLINOIS
DEPARTMENT OF TRANSPORTATION

STRUCTURE NOS. 099-8312 (EB) & 099-8313 (WB)

SHEET SA-01 OF SA-98 SHEETS

F.A.I. RTE.	SECTION	COUNTY	TOTAL SHEETS	SHEET NO.
I-80	FAI 80 21 STRUCTURE 7	WILL	1059	534
		CONTRACT NO. 62R28		
		ILLINOIS	FED. AID PROJECT	

MODEL: Default
FILE NAME: pw://transystems-pw.bentley.com:transyscorp-pw1-hosted/Documents/Projects_2018/CH401/401180022/01-Stantec/CAD/ML-04_62R28/04-Sheets/04-Structures/0998312_0998313-ML-04-001-General Plan & Elev.dgn
10/9/2023 3:20:28 PM

INDEX OF SHEETS

INDEX OF SHEETS (CONT.)

TOTAL BILL OF MATERIAL

ITEM	UNIT	S.N. 099-8312		S.N. 099-8313		TOTAL
		SUPER	SUB	SUPER	SUB	
Stone Riprap, Class A5	Sq Yd	-	1,673	-	1,776	3,449
Filter Fabric	Sq Yd	-	1,535	-	1,629	3,164
Removal Of Existing Structures No. 1	Each	1	-	-	-	1
Removal Of Existing Structures No. 2	Each	-	-	1	-	1
Structure Excavation	Cu Yd	-	1,960	-	2,052	4,012
Rock Excavation For Structures	Cu Yd	-	910	-	965	1,875
Floor Drains	Each	34	-	34	-	68
Concrete Structures	Cu Yd	325.1	-	-	330.9	656.0
Concrete Superstructure	Cu Yd	756.1	-	818.2	-	1,574.3
Concrete Encasement	Cu Yd	-	11.8	-	13.2	25.0
Protective Coat	Sq Yd	2,837	-	3,085	-	5,922
Furnishing And Erecting Precast Prestressed Concrete Beams, IL54N	Foot	2,482	-	2,793	-	5,275
Reinforcement Bars	Pound	-	20,570	-	22,840	43,410
Reinforcement Bars, Epoxy Coated	Pound	300,940	58,650	338,180	63,660	761,430
Bar Splicers	Each	1,342	424	1,346	424	3,536
Furnishing Steel Piles HP14x89	Foot	-	336	-	328	664
Driving Piles	Foot	-	336	-	328	664
Test Pile Steel HP14x89	Each	-	2	-	2	4
Pile Shoes	Each	-	16	-	18	34
Drilling And Setting Piles (In Rock)	Cu Ft	-	154	-	172	326
Name Plates	Each	1	-	1	-	2
Permanent Casing	Foot	-	118	-	134	252
Drilled Shaft In Soil	Cu Yd	-	68.8	-	74.5	143.3
Drilled Shaft In Rock	Cu Yd	-	91.3	-	105.5	196.8
Preformed Joint Strip Seal	Foot	123	-	133	-	256
Elastomeric Bearing Assembly, Type I	Each	16	-	18	-	34
Anchor Bolts, 1 1/4"	Each	32	-	36	-	68
Preformed Joint Seal 3 1/2"	Foot	-	-	376	-	376
Temporary Soil Retention System	Sq Ft	-	1,009	-	1,009	2,018
Granular Backfill For Structures	Cu Yd	-	254	-	273	527
Concrete Sealer	Sq Ft	-	5,770	-	5,813	11,583
Geocomposite Wall Drain	Sq Yd	-	140	-	150	290
Pipe Underdrains For Structures 4"	Foot	-	150	-	162	312
Crosshole Sonic Logging Access Ducts	Foot	-	313	-	354	667
Crosshole Sonic Logging Testing	Each	-	4	-	4	8
Bridge Deck Grooving (Longitudinal)	Sq Yd	1,492	-	1,989	-	3,481
Concrete Wearing Surface, 5"	Sq Yd	440	-	480	-	920
Precast Bridge Approach Slab	Sq Ft	3,744	-	4,104	-	7,848
Drainage Scuppers, DS-11	Each	-	-	2	-	2
Diamond Grinding (Bridge Section)	Sq Yd	2,322	-	2,570	-	4,892

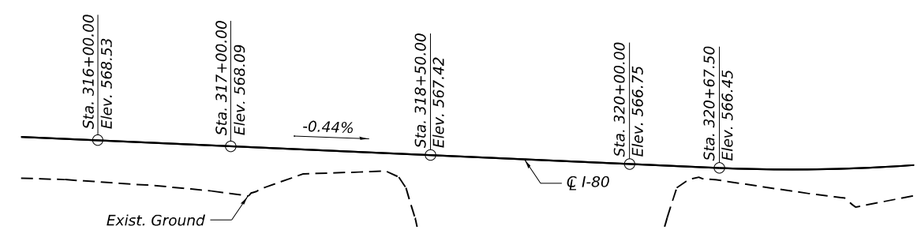

*** PROFILE GRADE

(Along EB I-80 and WB I-80 PGLs)

(The profile grade shows the final elevations after grinding)

*** The stations provided in the Profile Grade sketch are measured along the ℄ I-80; however, the elevations provided are the elevations measured along the WB PGL and EB PGL (which are identical).

MODEL: Default
FILE NAME: pw://transystems-pw.bentley.com:TRANSYSCORP-PW1-HOSTED/Documents/Projects_2018/CH401/401180022/01-Stantec/CAD/ML-04_62R28/04-Sheets/04-Structures/0998312_0998313-ML-04-002-Index of Sheets & Total BOM.dgn

HBM ENGINEERING GROUP, LLC

USER NAME =	DESIGNED - JJS, PG	REVISED -
	CHECKED - MI, JJS	REVISED -
PLOT SCALE =	DRAWN - PG	REVISED -
PLOT DATE =	CHECKED - MI, JJS	REVISED -

10/11/2023 2:52:08 PM

STATE OF ILLINOIS
DEPARTMENT OF TRANSPORTATION

INDEX OF SHEETS AND TOTAL BILL OF MATERIAL
STRUCTURE NOS. 099-8312 (EB) & 099-8313 (WB)

SHEET SA-02 OF SA-98 SHEETS

F.A.I. RTE.	SECTION	COUNTY	TOTAL SHEETS	SHEET NO.
I-80	FAI 80 21 STRUCTURE 7	WILL	1059	535
		CONTRACT NO. 62R28		
	ILLINOIS	FED. AID PROJECT		

GENERAL NOTES:

1. Reinforcement bars designated (E) shall be epoxy coated.
2. Slip forming of the median parapet is not allowed. Slip forming of the Outside traffic barriers is allowed.
3. A film forming Concrete Sealer shall be applied to all exposed surfaces of the piers.
4. Layout of the slope protection system may be varied to suit ground conditions in the field as directed by the Engineer.
5. The embankment configuration shown shall be the minimum that must be placed and compacted prior to construction of the abutments.
6. The existing bearing devices coating contains lead. The Contractor shall take appropriate precautions to address the presence of lead on this project.

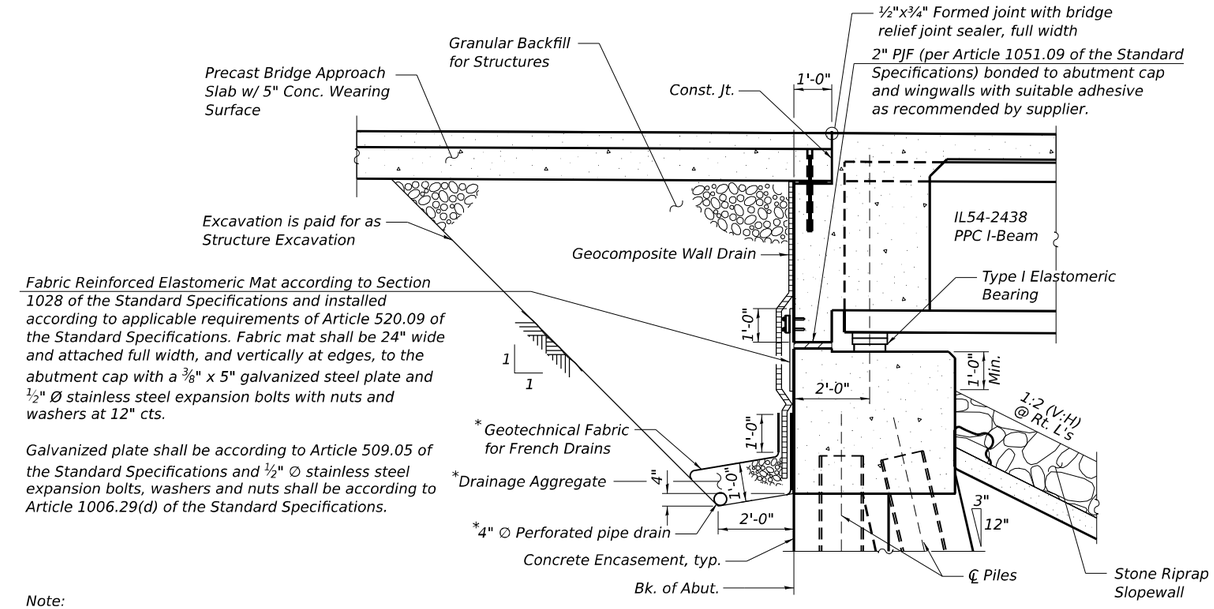

Note:
All drainage system components shall extend to 2'-0" from the end of each wingwall except an outlet pipe shall extend until intersecting with the side slopes. The pipes shall drain into concrete headwalls. (See Article 601.05 of the Standard Specifications and Highway Standard 601101).

Cost of fabric reinforced elastomeric mat, galvanized plate, stainless steel expansion bolts with nuts and washers and installation are included in the cost of Concrete Superstructure.

SECTION THRU SEMI-INTEGRAL ABUTMENT

* Included in the cost of Pipe Underdrains for Structures.

DESIGN SCOUR ELEVATION TABLE

Event / Limit State	Design Scour Elevations (ft.)				Item 113
	W. Abut.	Pier 1	Pier 2	E. Abut.	
Q100	558.50	538.42	537.97	557.12	8
Q500	558.50	538.25	537.80	557.12	
Design	558.50	538.42	537.97	557.12	
Check	558.50	538.25	537.80	557.12	

WATERWAY INFORMATION

Drainage Area = 340.0 Square miles

Exist. Overtopping Elev. = 565.91 at Sta. 320+74
Prop. Overtopping Elev. = 566.69 at Sta. 321+48

Flood	Freq. Yr.	Q C.F.S.	Opening Ft² Exist.	Opening Ft² Prop.	Nat. H.W.E.	Head - Ft. Exist.	Head - Ft. Prop.	Headwater El. Exist.	Headwater El. Prop.
Ten-Year	10	8,682	1,436	1,516	552.45	0.32	0.20	552.77	552.65
Design	50	12,250	1,720	1,837	553.72	0.42	0.25	554.14	553.97
Base	100	13,997	1,847	1,979	554.27	0.48	0.30	554.75	554.57
Max. Calc.	500	18,000	2,114	2,279	555.41	0.62	0.40	556.03	555.81

All-Time H.W.E. & Date:
October 1954, 554 ft.

10 Year Velocity Thru Exist. Structure = 5.59 ft/s
10 Year Velocity Thru Prop. Structure = 5.44 ft/s

STA. 318+69.85
BUILT 20__ BY
STATE OF ILLINOIS
F.A.I. RT. I-80
SEC. FAI 80 21 STRUCTURE 7
LOADING HL-93
STR. NO. 099-8312

NAME PLATE

(EB I-80 over DuPage River)
See Std. 515001

STA. 318+69.85
BUILT 20__ BY
STATE OF ILLINOIS
F.A.I. RT. I-80
SEC. FAI 80 21 STRUCTURE 7
LOADING HL-93
STR. NO. 099-8313

NAME PLATE

(WB I-80 over DuPage River)
See Std. 515001

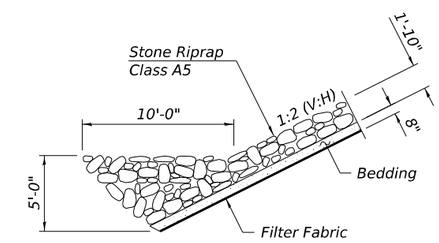

SECTION A-A

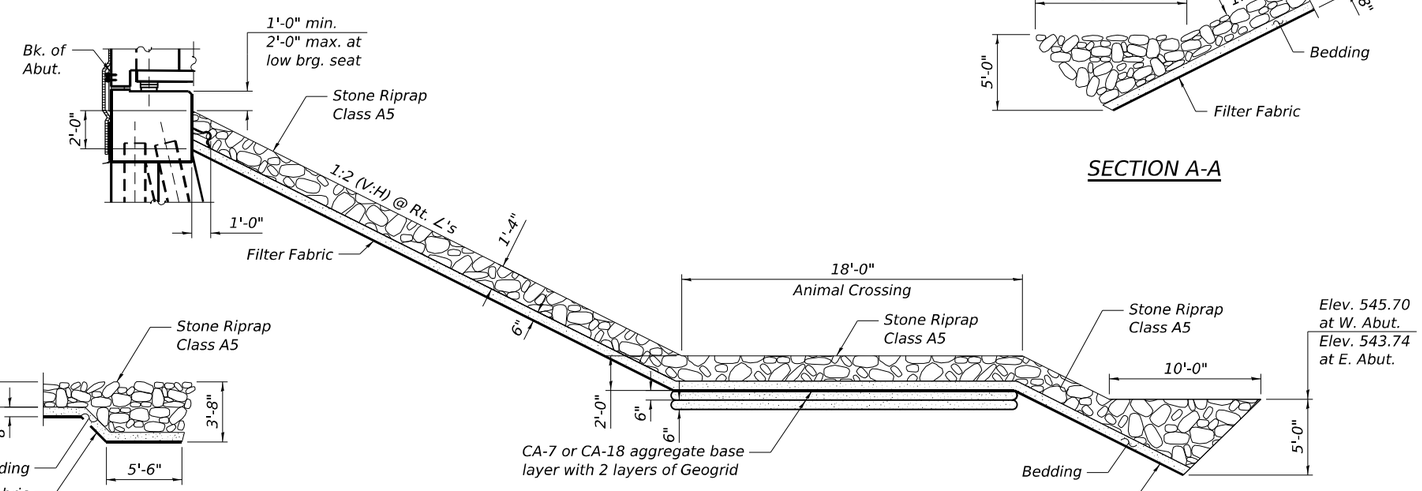

SECTION B-C

SECTION THRU SLOPEWALL

Note:
All costs associated with CA-7/CA-18 and Geogrid reinforcement for Animal Crossing shall not be paid separately but shall be included in the cost of Stone Riprap, Class A5.

MODEL: Default
FILE NAME: pw://transystems-pw.bentley.com:transyscorp-pw1-hosted/Documents/Projects_2018/CH401/401180022/01-Stantec/CAD/ML-04_62R28/04-Sheets/04-Structures/0998312_0998313-ML-04-003-General Notes & Misc. Details.dgn
10/9/2023 3:20:55 PM

HBM ENGINEERING GROUP, LLC

USER NAME =	DESIGNED - JJS	REVISED -
	CHECKED - MI	REVISED -
PLOT SCALE =	DRAWN - PG	REVISED -
PLOT DATE =	CHECKED - MI	REVISED -

STATE OF ILLINOIS
DEPARTMENT OF TRANSPORTATION

GENERAL NOTES AND MISCELLANEOUS DETAILS
STRUCTURE NOS. 099-8312 (EB) & 099-8313 (WB)

SHEET SA-03 OF SA-98 SHEETS

F.A.I. RTE.	SECTION	COUNTY	TOTAL SHEETS	SHEET NO.
I-80	FAI 80 21 STRUCTURE 7	WILL	1059	536

CONTRACT NO. 62R28
ILLINOIS FED. AID PROJECT

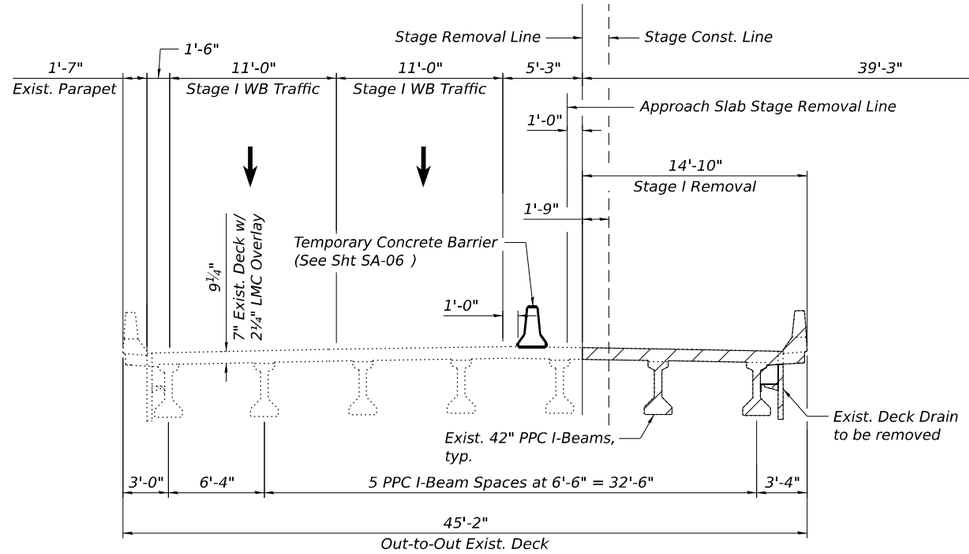

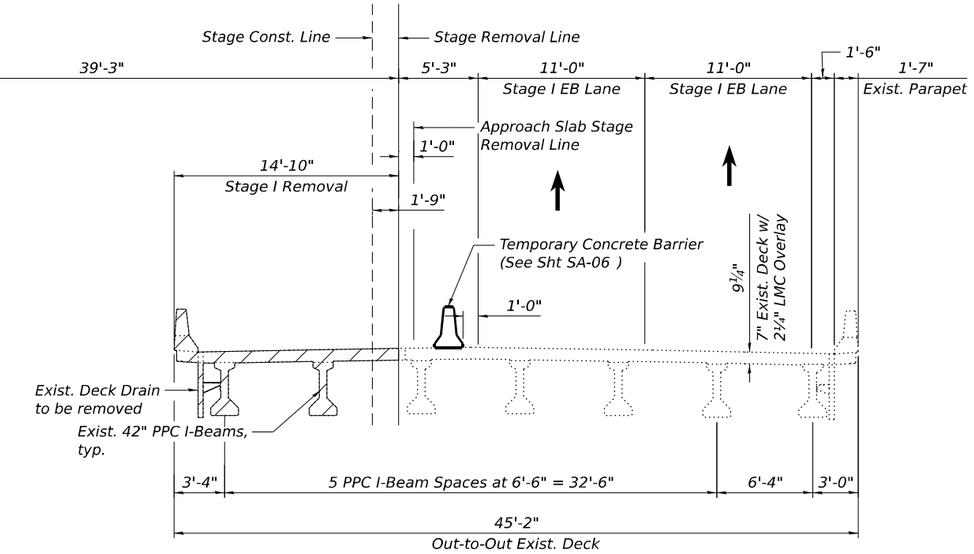

STAGE I REMOVAL

(Looking East)

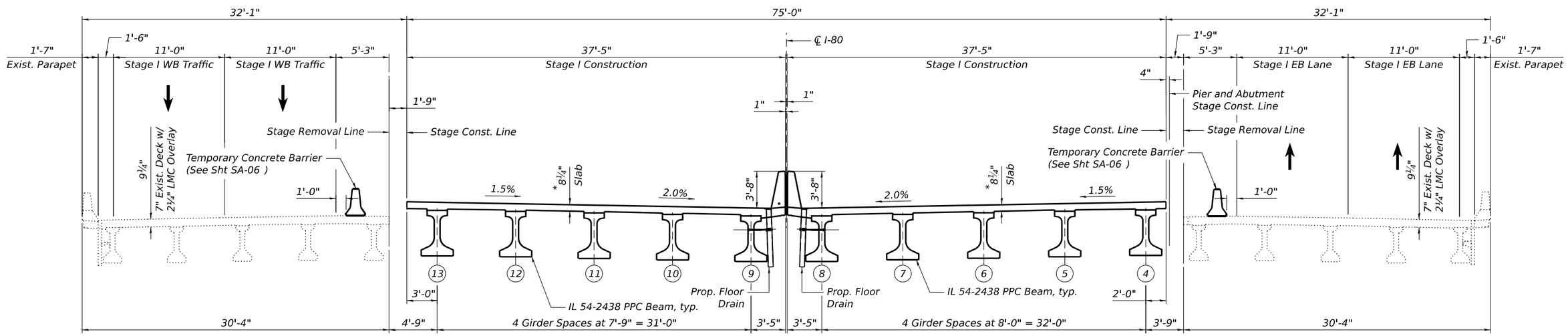

STAGE I CONSTRUCTION

(Looking East)

STAGE I REMOVAL

1. Install temporary concrete barrier as shown to locate traffic on the north side of existing WB structure and the south side of the existing EB structure (See Roadway Plans).
2. Install Temporary Soil Retention Systems at the abutments, slopewalls and approaches.
3. Remove existing concrete bridge decks, approaches, parapets, appurtenances, PPC I-beams, bearings and substructure elements within the limits of Stage I Removal.

STAGE I CONSTRUCTION

1. Drive HP piles for abutments, and construct drilled shafts with permanent steel casing for piers, as shown in the Substructure Layout Plan.
2. Construct semi-integral abutment caps, slopewalls, pier webwalls, pier columns and pier caps.
3. Install bearings at abutments and erect Girders 4 thru 13 and associated permanent bracing.
4. Install deck forms and reinforcement.
5. Construct reinforced concrete decks, concrete diaphragms, parapets, and deck drains.
6. Construct the precast bridge approach slabs.
7. Perform diamond grinding and longitudinal bridge deck grooving for bridge deck and approaches.

STAGE I CONSTRUCTION - CONTINUED

8. Apply protective coat for bridge decks, approaches and tops and inside faces of parapets.
9. Place temporary pavement markings on the top of deck for Stage II traffic (See Roadway Plans).

* Prior to grinding

NOTE:

1. For Quantity of Temporary Concrete Barrier, See Roadway Plans.

LEGEND

Removal of Existing Structures 1 or 2

HBM ENGINEERING GROUP, LLC

USER NAME =	DESIGNED - JMI, JJS	REVISED -	
	CHECKED - MI. KJD	REVISED -	
PLOT SCALE =	DRAWN - JMI, JJS	REVISED -	
PLOT DATE =	CHECKED - MI. KJD	REVISED -	

STATE OF ILLINOIS
DEPARTMENT OF TRANSPORTATION

STAGE CONSTRUCTION (SHEET 1 OF 2)
STRUCTURE NOS. 099-8312 (EB) & 099-8313 (WB)

SHEET SA-04 OF SA-98 SHEETS

F.A.I. RTE.	SECTION	COUNTY	TOTAL SHEETS	SHEET NO.
I-80	FAI 80 21 STRUCTURE 7	WILL	1059	537
		CONTRACT NO. 62R28		
	ILLINOIS	FED. AID PROJECT		

MODEL: Default
FILE NAME: pw://transystems-pw.bentley.com:transyscorp-pw1-hosted/Documents/Projects_2018/CH401/401180022/01-Stantec/CAD/MI-04_62R28/04-Sheets/04-Structures/0998312_0998313-MI-04-004-Stage Construction (Sheet 1 of 2).dgn

10/9/2023 3:20:57 PM

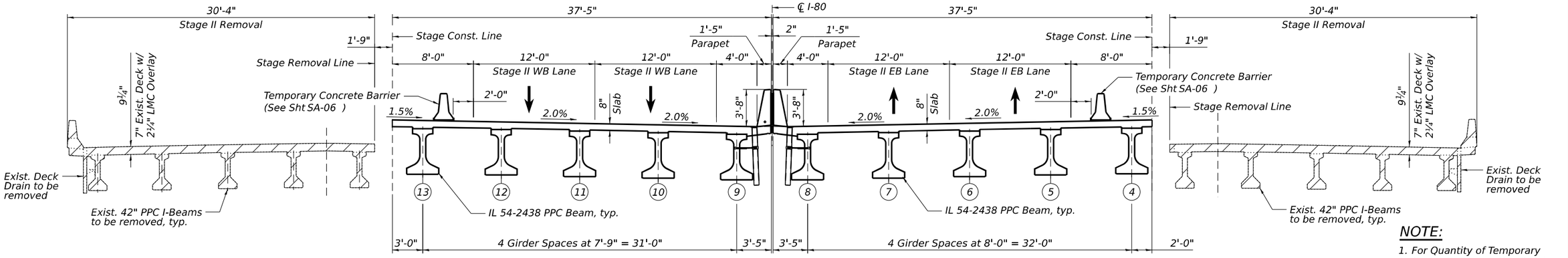

STAGE II REMOVAL

(Looking East)

NOTE:

1. For Quantity of Temporary Concrete Barrier, See Roadway Plans.

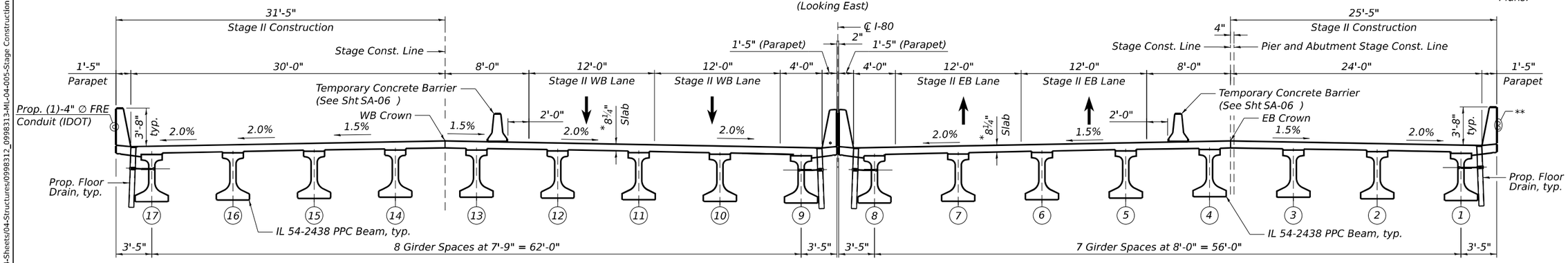

STAGE II CONSTRUCTION

(Looking East)

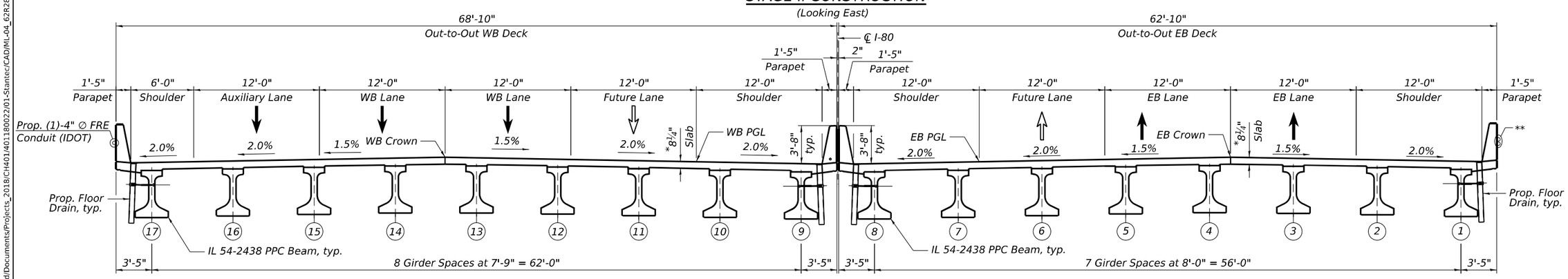

FINAL DECK CROSS SECTION

(Looking East)

STAGE II REMOVAL

1. Install temporary concrete barrier as shown to locate Stage II traffic on the newly constructed Stage I portion of the bridges (See Roadway Plans).
2. Remove existing concrete bridge decks, approaches, parapets, appurtenances, PPC I-beams, bearings and substructure elements within the limits of Stage II Removal.

STAGE II CONSTRUCTION

1. Drive HP piles for remaining portions of abutments, and construct drilled shafts with permanent steel casing for remaining portions of piers, as shown in the Substructure Layout Plan.
2. Construct remaining portions of semi-integral abutment caps, slopewalls, pier webwalls, pier columns and pier caps.
3. Install remaining bearings at abutments and erect Girders 1 thru 3, Girders 14 thru 17 and associated permanent bracing.

STAGE II CONSTRUCTION - CONTINUED

4. Install deck forms and reinforcement.
5. Construct reinforced concrete decks, concrete diaphragms, parapets, scuppers (at north side of WB bridge only) and deck drains.
6. Construct remaining portions of the precast bridge approach slabs.
7. Perform diamond grinding and longitudinal bridge deck grooving for bridge decks and approaches.
8. Apply protective coat for bridge decks, approaches and tops and inside faces of parapets.
9. Place final lane markings (see Roadway Plans).

* Prior to grinding

** Prop. (1)-4" ∅ FRE Conduit (IDOT)
Prop. (1)-4" ∅ FRE Conduit (Third Party)

LEGEND

Removal of Existing Structures 1 or 2

HBM ENGINEERING GROUP, LLC

USER NAME =	DESIGNED - JMI, JJS	REVISED -	
	CHECKED - MI, KJD	REVISED -	
PLOT SCALE =	DRAWN - JMI	REVISED -	
PLOT DATE =	CHECKED - MI, KJD	REVISED -	

STATE OF ILLINOIS
DEPARTMENT OF TRANSPORTATION

STAGE CONSTRUCTION (SHEET 2 OF 2)
STRUCTURE NOS. 099-8312 (EB) & 099-8313 (WB)

SHEET SA-05 OF SA-98 SHEETS

F.A.I. RTE.	SECTION	COUNTY	TOTAL SHEETS	SHEET NO.
I-80	FAI 80 21 STRUCTURE 7	WILL	1059	538
		CONTRACT NO. 62R28		
	ILLINOIS	FED. AID PROJECT		

MODEL: Default
FILE NAME: pw://transystems-pw.bentley.com:transyscorp-pw1-hosted/Documents/Projects_2018/CH401/401180022/01-Stantec/CAD/MI-04_62R28/04-Sheets/04-Structures/0998312_0998313-MI-04-005-Stage Construction (Sheet 2 of 2).dgn

10/9/2023 3:20:59 PM

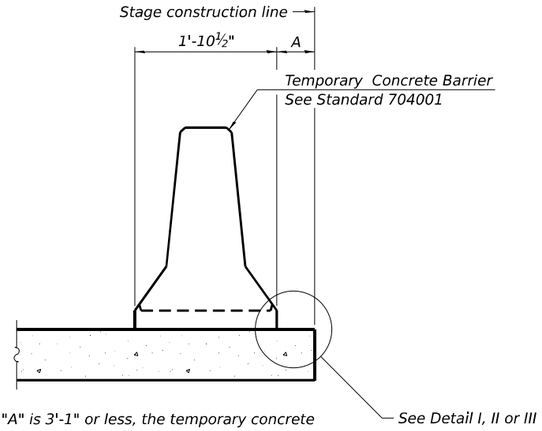

When "A" is 3'-1" or less, the temporary concrete barrier shall be restrained to the new slab according to Detail I, II or III. No restraint is required when "A" is greater than 3'-1".

NEW SLAB OR NEW DECK BEAM

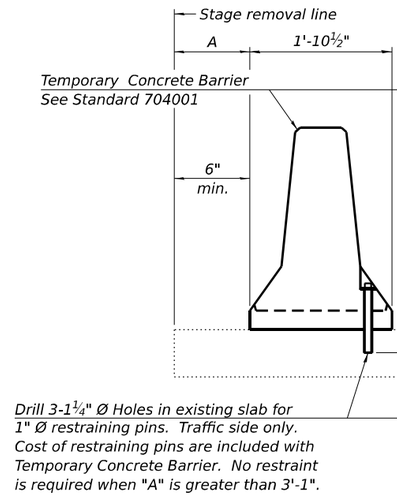

EXISTING SLAB

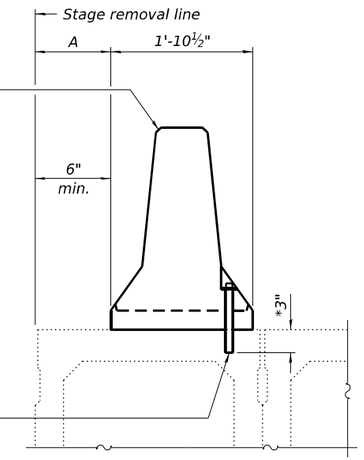

* When hot-mix asphalt wearing surface is present, embedment shall be 3" plus the wearing surface depth.

EXISTING DECK BEAM

SECTIONS THRU SLAB OR DECK BEAM

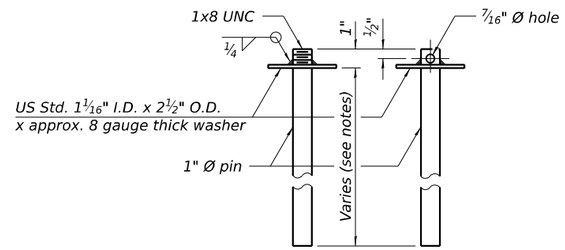

RESTRAINING PIN

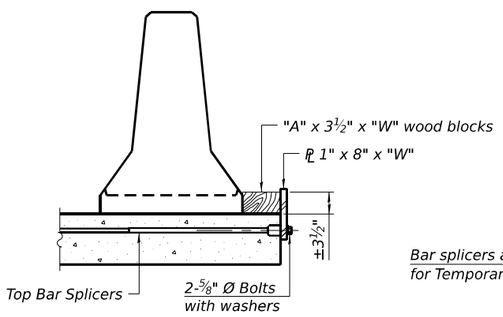

DETAIL I

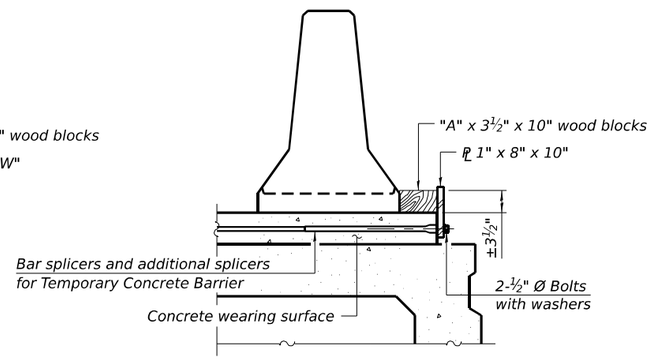

DETAIL II

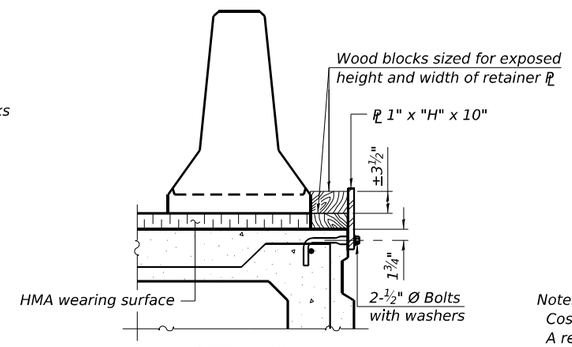

DETAIL III

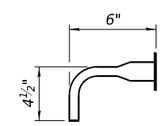

BAR SPLICER FOR #4 BAR - DETAIL III

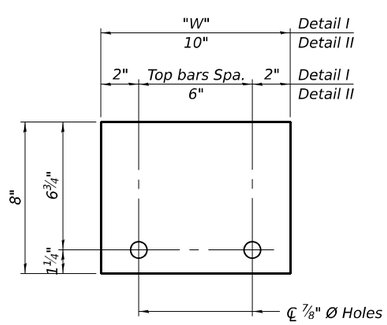

STEEL RETAINER PL 1" x 8" x "W"

(Detail I and II)

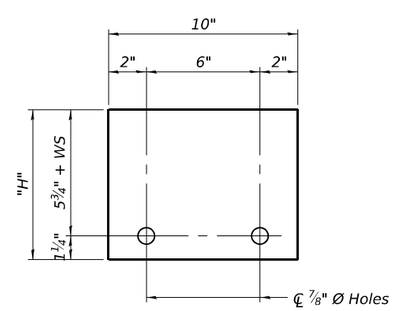

STEEL RETAINER PL 1" x "H" x 10"

(Detail III)

Notes:

Cost of retainer assembly is included with Temporary Concrete Barrier.

A retainer assembly shall be located at the approximate ℄ of each temporary concrete barrier.

The retainer plate shall not be removed until the concrete on the adjacent stage is ready to be poured. For Detail III applications the retainer plate shall not be removed until just prior to placing the adjacent beam.

When the 'A' dimension is less than 1½", the wood block shall be omitted and the barrier shall be placed in direct contact with the steel retainer plate. For deck beam applications the minimum required 'A' distance is 6" to accommodate the shear key clamping device.

Detail I - Installation for a new bridge deck or bridge slab.

Detail II - Installation for a new deck beam with an initial concrete wearing surface. Additional bar splicers shall be provided at 6'-0" centers and paired with the bar splicers of the concrete wearing surface reinforcement to accommodate the installation of the retainer assemblies. The cost of the additional bar splicers is included with the concrete wearing surface.

Detail III - Installation for a new deck beam with no initial wearing surface or with an initial hot-mix asphalt (HMA) wearing surface present. The deck beam directly beneath the temporary concrete barrier shall be fabricated with bar splicer inserts in the side of the beam, as detailed, to accommodate the installation of the retainer assemblies. A pair of bar splicers, 6" apart, shall be placed at 6'-0" centers along the length of the beam. The cost of the bar splicers is included with the deck beam.

RAILING CRITERIA

NCHRP 350 Test Level	3
Railing Weight (plf)	440

R-27

5-15-2023

HBM ENGINEERING GROUP, LLC

USER NAME =	DESIGNED - JMI, JJS	REVISED -	
	CHECKED - MI	REVISED -	
PLOT SCALE =	DRAWN - JMI	REVISED -	
PLOT DATE =	CHECKED - MI	REVISED -	

STATE OF ILLINOIS
DEPARTMENT OF TRANSPORTATION

TEMPORARY CONCRETE BARRIER
STRUCTURE NOS. 099-8312 (EB) & 099-8313 (WB)

SHEET SA-06 OF SA-98 SHEETS

F.A.I. RTE.	SECTION	COUNTY	TOTAL SHEETS	SHEET NO.
I-80	FAI 80 21 STRUCTURE 7	WILL	1059	539
		CONTRACT NO. 62R28		
	ILLINOIS	FED. AID PROJECT		

MODEL: Default
FILE NAME: pw://transystems-pw.bentley.com:transyscorp-pw1-hosted/Documents/Projects_2018/CH401/401180022/01-Stantec/CAD/ML-04_62R28/04-Sheets/04-Structures/0998312_0998313-ML-04-006-Temporary Concrete Barrier.dgn

10/9/2023 3:21:01 PM

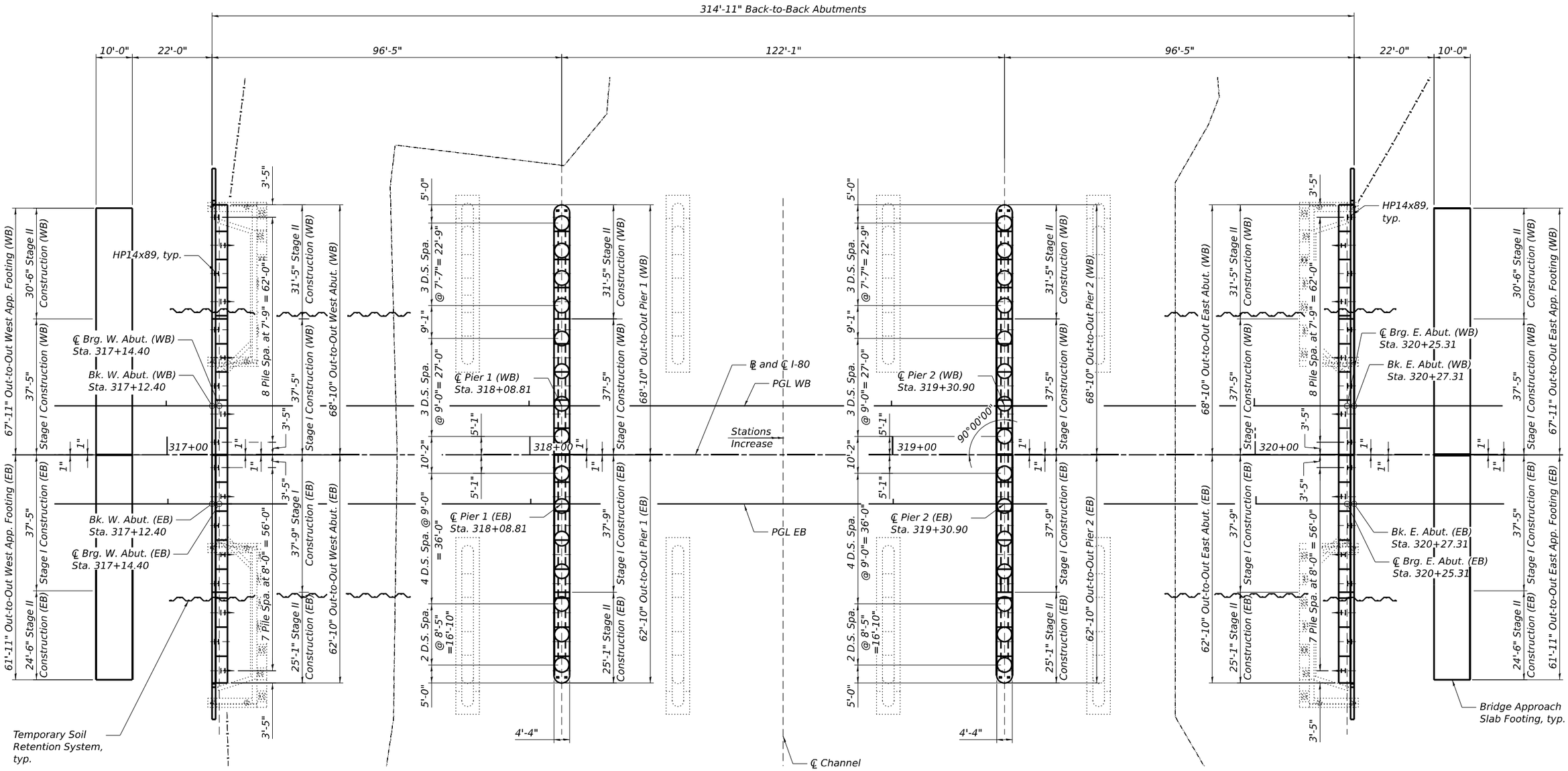

SUBSTRUCTURE LAYOUT

LEGEND

- Temporary Soil Retention System
- Water Edge
- Exist. Fence to be removed
- HP14x89
- HP14x89 (Battered)
- D.S. Drilled Shafts

NOTES:

1. For Removal of Existing Structures, see Sheets SA-10 thru SA-17.
2. For existing approach slabs removal quantities, see Roadway plans.
3. For Temporary Soil Retention Systems, see Sheets SA-08 and SA-09.

HBM ENGINEERING GROUP, LLC

USER NAME =	DESIGNED - JMI	REVISED -	
	CHECKED - MI, KJD	REVISED -	
PLOT SCALE =	DRAWN - JMI, JJS	REVISED -	
PLOT DATE =	CHECKED - MI, KJD	REVISED -	

STATE OF ILLINOIS
DEPARTMENT OF TRANSPORTATION

WB AND EB SUBSTRUCTURE LAYOUT
STRUCTURE NOS. 099-8312 (EB) & 099-8313 (WB)

SHEET SA-07 OF SA-98 SHEETS

F.A.I. RTE.	SECTION	COUNTY	TOTAL SHEETS	SHEET NO.
I-80	FAI 80 21 STRUCTURE 7	WILL	1059	540
		CONTRACT NO. 62R28		
		ILLINOIS	FED. AID PROJECT	

MODEL: Default
FILE NAME: pw://transystems-pw.bentley.com:transyscorp-pw1-hosted/Documents/Projects_2018/CH401/401180022/01-Stantec/CAD/ML-04_62R28/04-Sheets/04-Structures/0998312_0998313-ML-04-007-WB & EB Substructure Layout.dgn
10/9/2023 3:21:48 PM

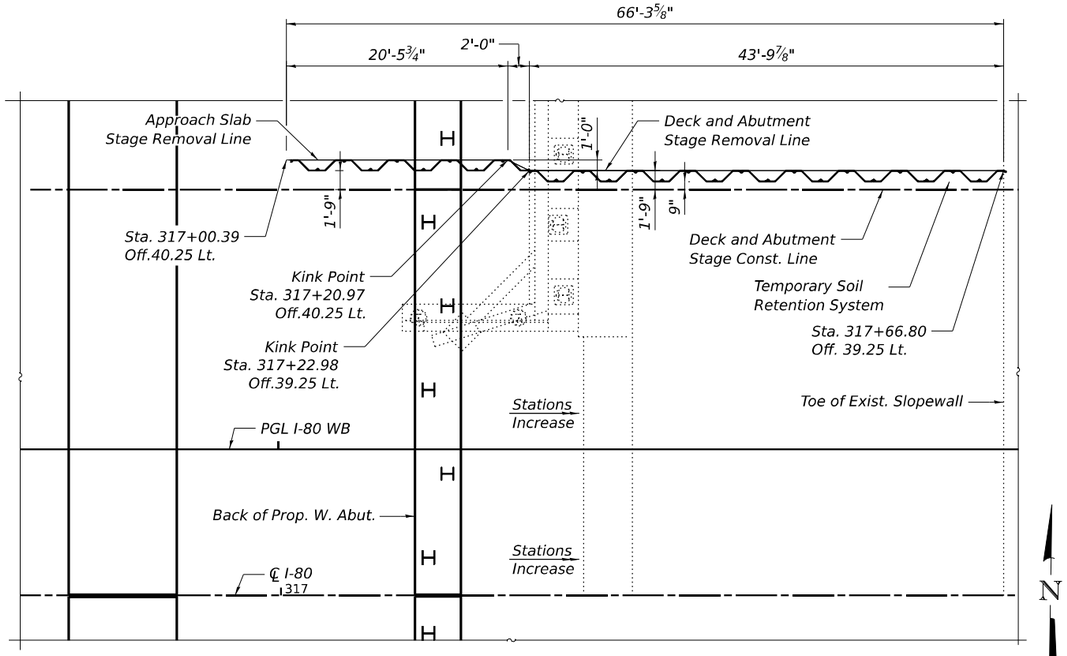

PARTIAL PLAN AT WEST ABUT. TEMPORARY SOIL RETENTION SYSTEM

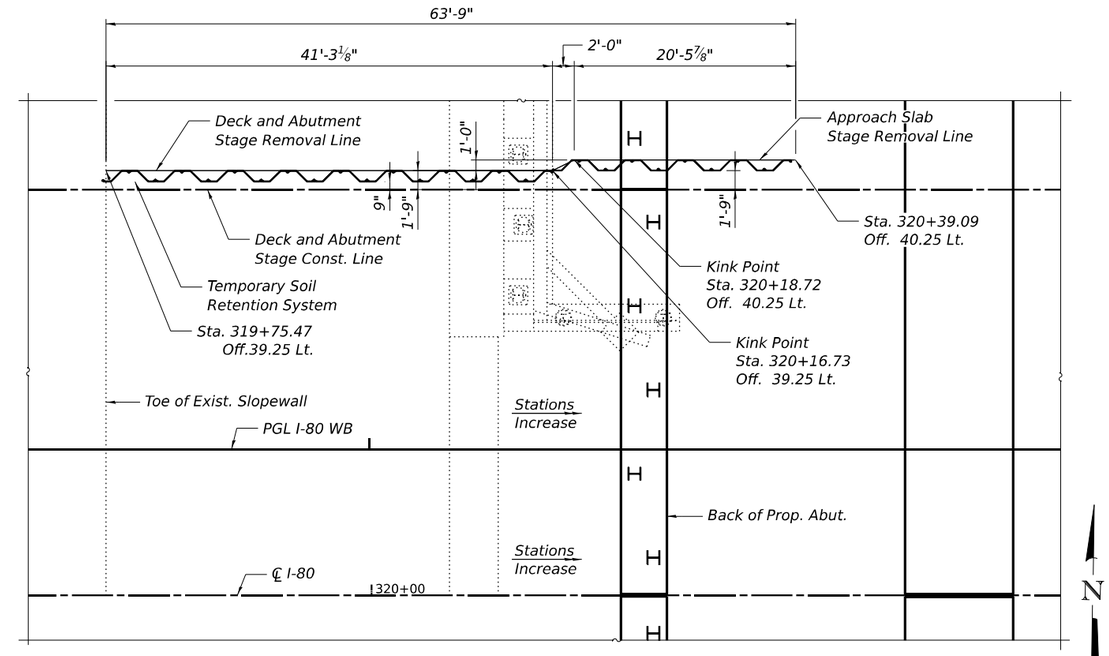

PARTIAL PLAN AT EAST ABUT. TEMPORARY SOIL RETENTION SYSTEM

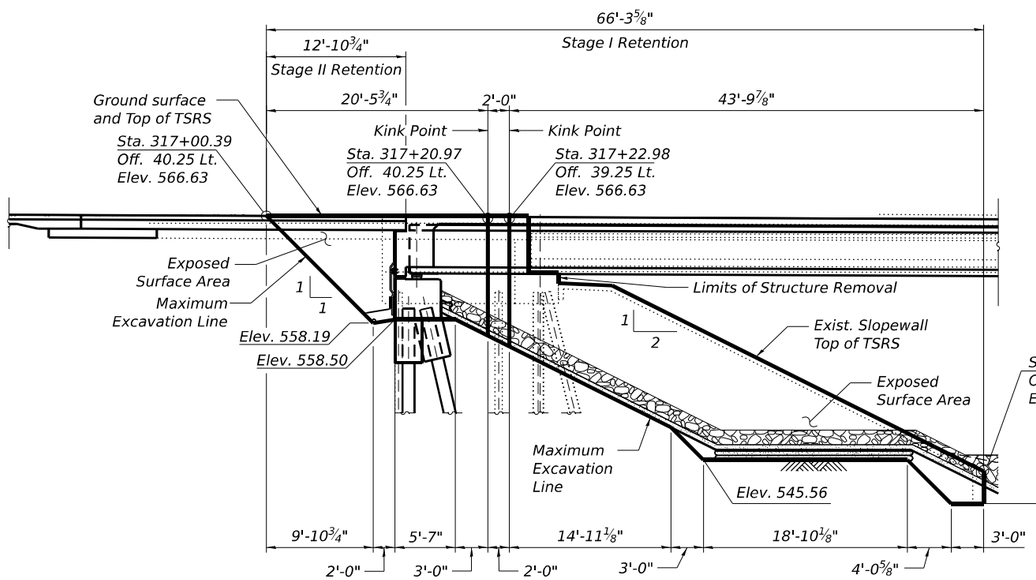

WEST ABUT. TEMPORARY SOIL RETENTION SYSTEM ELEVATION

(Looking South)

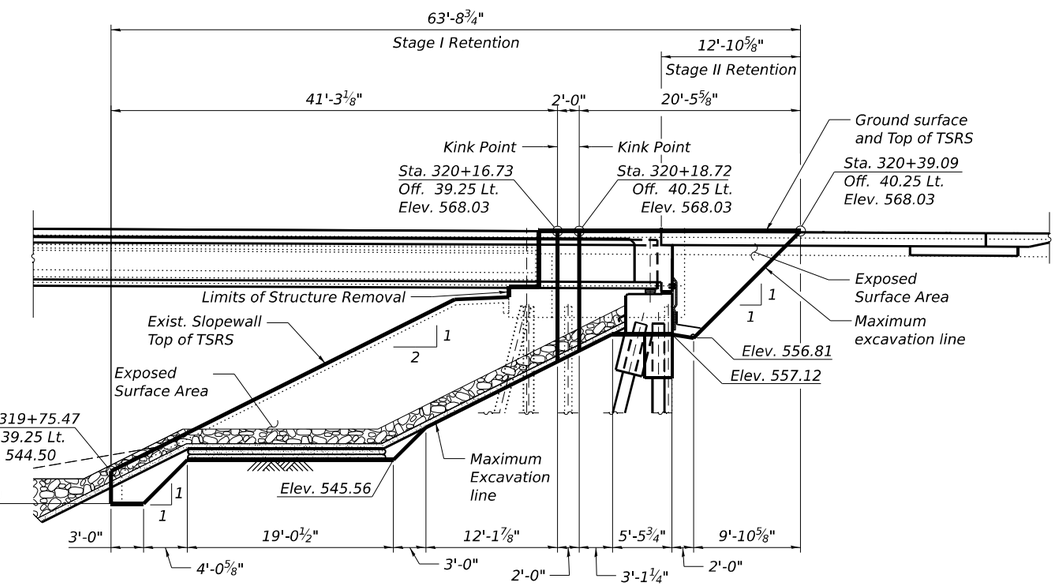

EAST ABUT. TEMPORARY SOIL RETENTION SYSTEM ELEVATION

(Looking South)

NOTES:

1. A cantilevered sheet piling design does not appear feasible and additional members or other retention systems may be necessary. The Contractor shall submit a temporary soil retention system design including plan details and calculations for review and acceptance by the Engineer.

2. The Contractor shall field verify locations of existing underground utilities. The Contractor shall take precautions to protect existing utilities during construction of the bridge. Any damage to the existing utilities shall be the responsibility of the Contractor. The existing utilities in conflict with the bridge construction shall be abandoned or relocated according to the directions given on the Roadway Plans.

LEGEND

Temporary Soil Retention System

S.N. 099-8313 (WB)
BILL OF MATERIAL

ITEM	UNIT	TOTAL
Structure Excavation	Cu Yd	1376
Rock Excavation For Structures	Cu Yd	911
Temporary Soil Retention System	Sq Ft	1009

MODEL: Default
FILE NAME: pw://transystems-pw.bentley.com:transyscorp-pw1-hosted/Documents/Projects_2018/CH401/401180022/01-Stantec/CAD/MI-04_62R28/04-Sheets/04-Structures/0998312_0998313-MI-04-008-WB Temporary Soil Retention System.dgn

HBM ENGINEERING GROUP, LLC

USER NAME =	DESIGNED - KJD	REVISED -	
	CHECKED - MI, JJS	REVISED -	
PLOT SCALE =	DRAWN - JMI, KJD	REVISED -	
PLOT DATE =	CHECKED - MI, JJS	REVISED -	

STATE OF ILLINOIS
DEPARTMENT OF TRANSPORTATION

WB TEMPORARY SOIL RETENTION SYSTEM
STRUCTURE NOS. 099-8312 (EB) & 099-8313 (WB)

SHEET SA-08 OF SA-98 SHEETS

F.A.I. RTE.	SECTION	COUNTY	TOTAL SHEETS	SHEET NO.
I-80	FAI 80 21 STRUCTURE 7	WILL	1059	541
		CONTRACT NO. 62R28		
	ILLINOIS	FED. AID PROJECT		

10/9/2023 3:21:54 PM

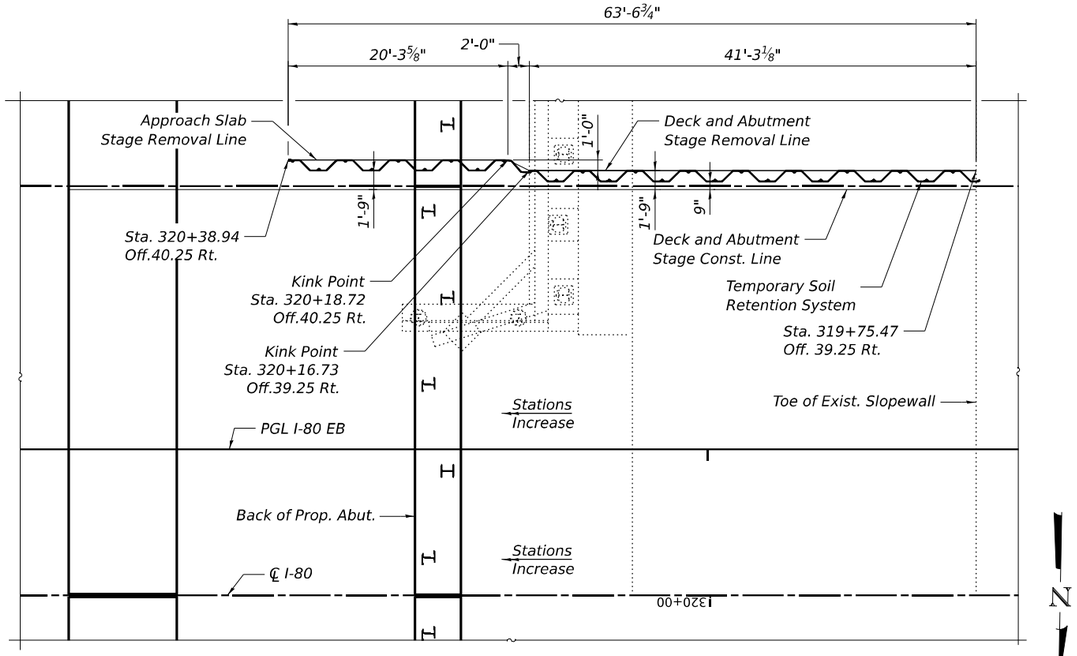

PARTIAL PLAN AT EAST ABUT. TEMPORARY SOIL RETENTION SYSTEM

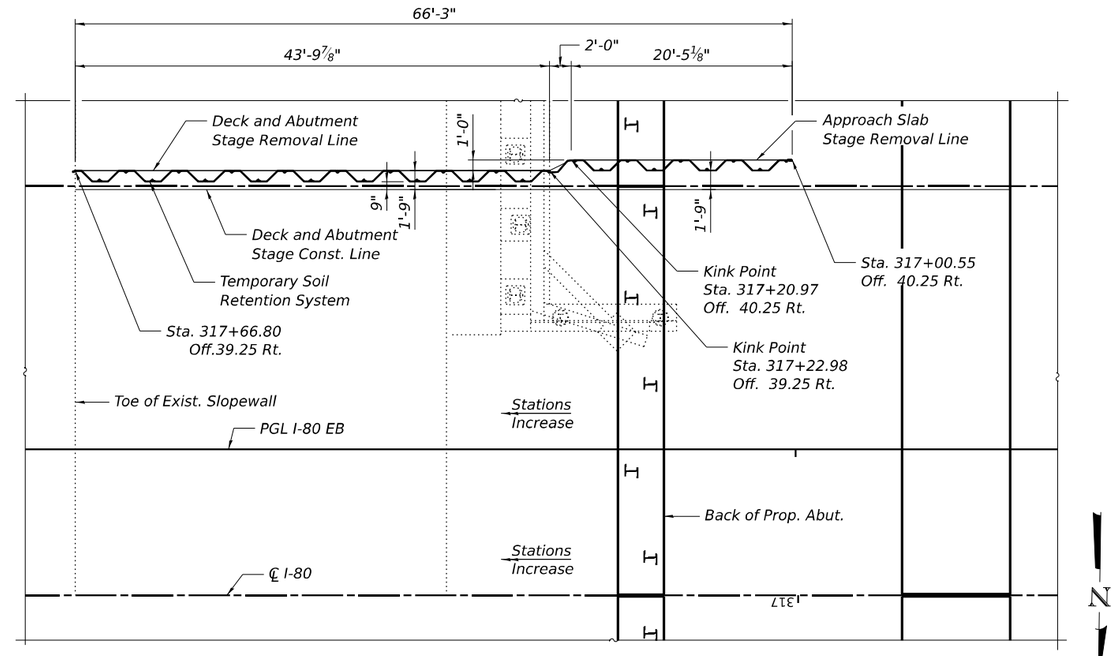

PARTIAL PLAN AT WEST ABUT. TEMPORARY SOIL RETENTION SYSTEM

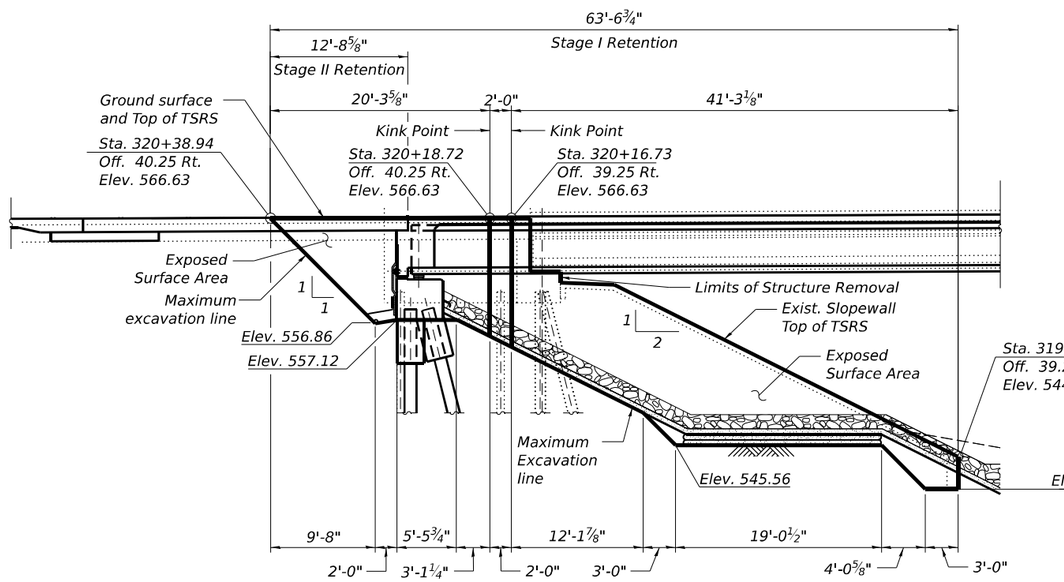

EAST ABUT. TEMPORARY SOIL RETENTION SYSTEM ELEVATION

(Looking South)

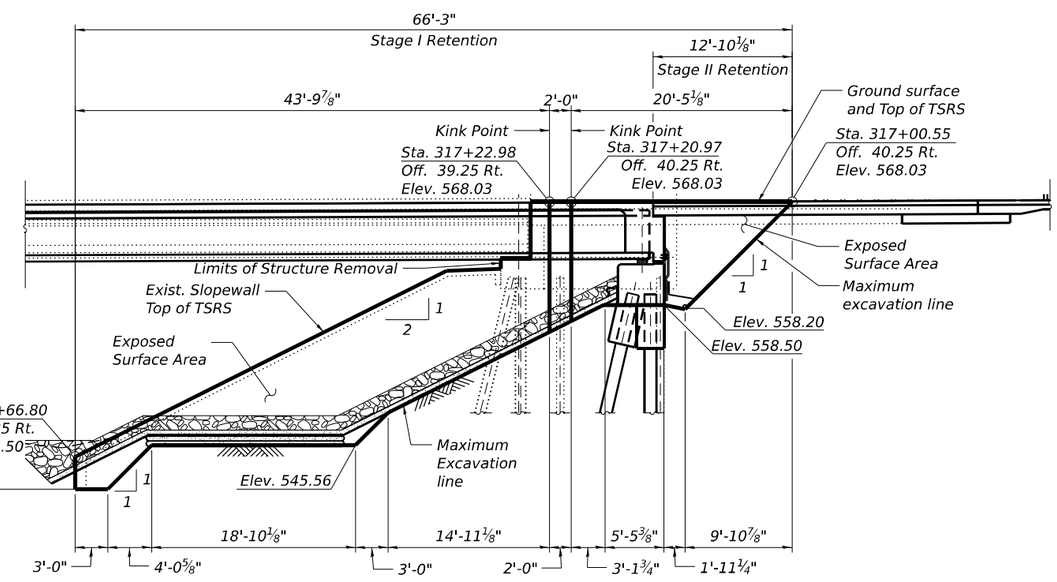

WEST ABUT. TEMPORARY SOIL RETENTION SYSTEM ELEVATION

(Looking South)

NOTES:

1. A cantilevered sheet piling design does not appear feasible and additional members or other retention systems may be necessary. The Contractor shall submit a temporary soil retention system design including plan details and calculations for review and acceptance by the Engineer.

2. The Contractor shall field verify locations of existing underground utilities. The Contractor shall take precautions to protect existing utilities during construction of the bridge. Any damage to the existing utilities shall be the responsibility of the Contractor. The existing utilities in conflict with the bridge construction shall be abandoned or relocated according to the directions given on the Roadway Plans.

LEGEND

Temporary Soil Retention System

S.N. 099-8312 (EB)
BILL OF MATERIAL

ITEM	UNIT	TOTAL
Structure Excavation	Cu Yd	1294
Rock Excavation For Structures	Cu Yd	855
Temporary Soil Retention System	Sq Ft	1009

MODEL: Default
FILE NAME: pw://transystems-pw.bentley.com:transyscorp-pw1-hosted/Documents/Projects_2018/CH401/401180022/01-Stantec/CAD/ML-04_62R28/04-Sheets/04-Structures/0998312_0998313-ML-04-009-EB Temporary Soil Retention System.dgn
10/9/2023 3:22:00 PM

HBM ENGINEERING GROUP, LLC

USER NAME =	DESIGNED - KJD	REVISED -
	CHECKED - MI, JJS	REVISED -
PLOT SCALE =	DRAWN - JMI, KJD	REVISED -
PLOT DATE =	CHECKED - MI, JJS	REVISED -

STATE OF ILLINOIS
DEPARTMENT OF TRANSPORTATION

EB TEMPORARY SOIL RETENTION SYSTEM
STRUCTURE NOS. 099-8312 (EB) & 099-8313 (WB)

SHEET SA-09 OF SA-98 SHEETS

F.A.I. RTE.	SECTION	COUNTY	TOTAL SHEETS	SHEET NO.
I-80	FAI 80 21 STRUCTURE 7	WILL	1059	542
		CONTRACT NO. 62R28		
	ILLINOIS	FED. AID PROJECT		

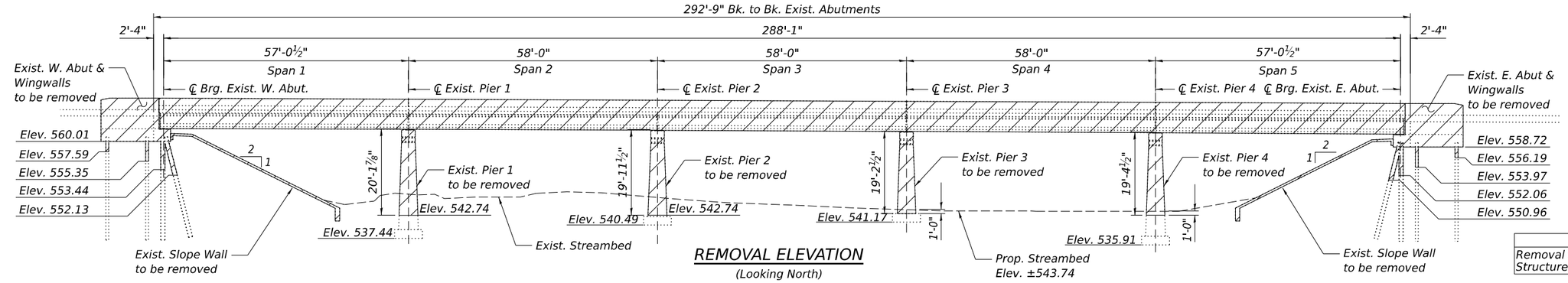

REMOVAL ELEVATION

(Looking North)

BILL OF MATERIAL

ITEM	UNIT	TOTAL
Removal Of Existing Structures No. 2	Each	1

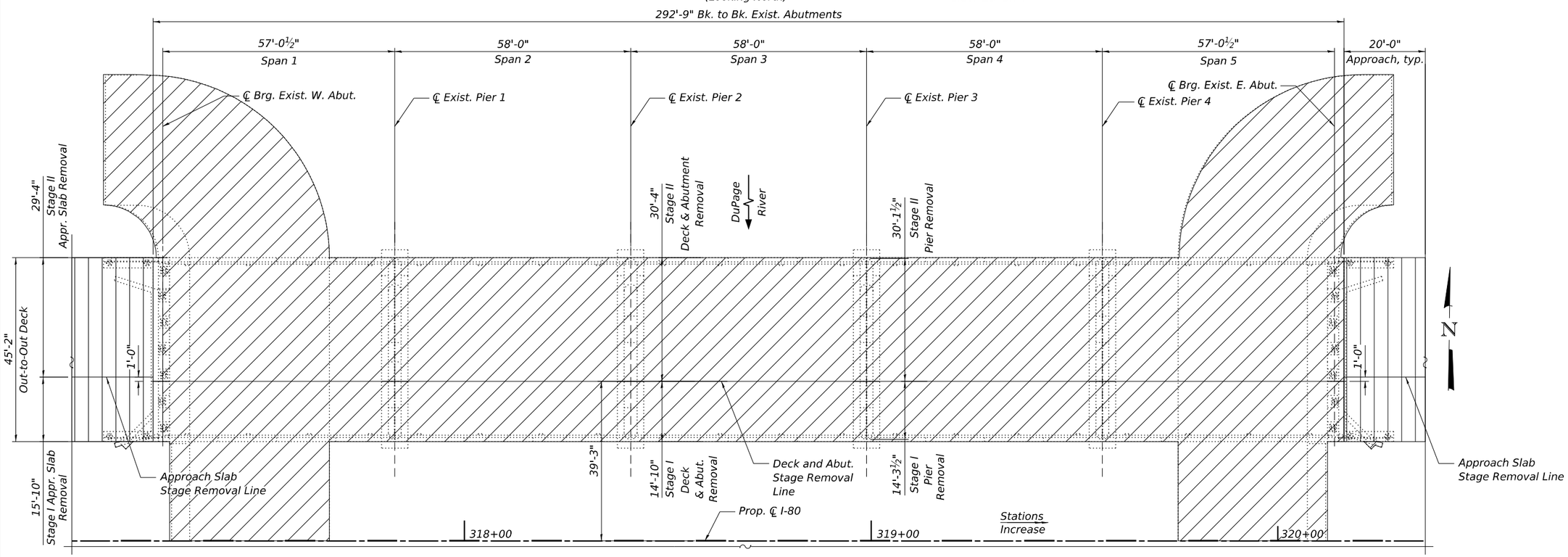

REMOVAL PLAN

NOTES:

1. For suggested stages of construction and sequencing requirements, see Roadway Plans and Special Provisions.
2. For substructure removal details, see Sheets SA-11 thru SA-13.
3. For Temporary Soil Retention System limits and details, see Sheet SA-08.
4. The Contractor shall take all necessary precautions to protect existing utilities and adjacent structures during removal/construction of the bridge.
5. Existing Piers shall be removed according to Art. 501.05 of the Standard Specifications and as shown in the Plans.
6. For Approach Slab Removal, See Roadway Plans.

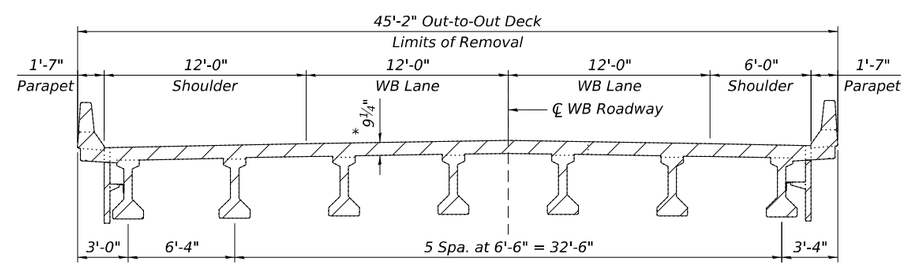

EXISTING DECK CROSS SECTION

(Looking East)

* 7" Exist. Deck w/ 2¼" Latex Modified Concrete Overlay

LEGEND

Removal of Existing Structures No. 2

Approach Slab Removal See Roadway Plans

HBM ENGINEERING GROUP, LLC

USER NAME =	DESIGNED - KJD	REVISED -
	CHECKED - MI, JJS	REVISED -
PLOT SCALE =	DRAWN - KJD	REVISED -
PLOT DATE =	CHECKED - MI, JJS	REVISED -

STATE OF ILLINOIS
DEPARTMENT OF TRANSPORTATION

WB EXIST. STRUCT. REM. PLAN AND ELEVATION
STRUCTURE NOS. 099-8312 (EB) & 099-8313 (WB)

SHEET SA-10 OF SA-98 SHEETS

F.A.I. RTE.	SECTION	COUNTY	TOTAL SHEETS	SHEET NO.
I-80	FAI 80 21 STRUCTURE 7	WILL	1059	543
		CONTRACT NO. 62R28		
	ILLINOIS	FED. AID PROJECT		

MODEL: Default
FILE NAME: pw://transystems-pw.bentley.com:transyscorp-pw1-hosted/Documents/Projects_2018/CH401/401180022/01-Stantec/CAD/MI-04_62R28/04-Sheets/04-Structures/0998312_0998313-MI-04-010-WB Exist. Struct. Rem. Plan & Elevation.dgn

10/9/2023 3:22:16 PM

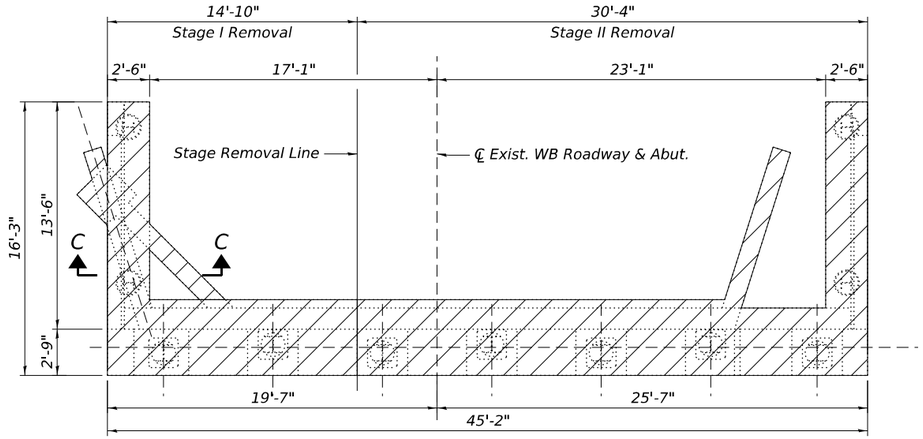

REMOVAL PLAN - WEST ABUTMENT

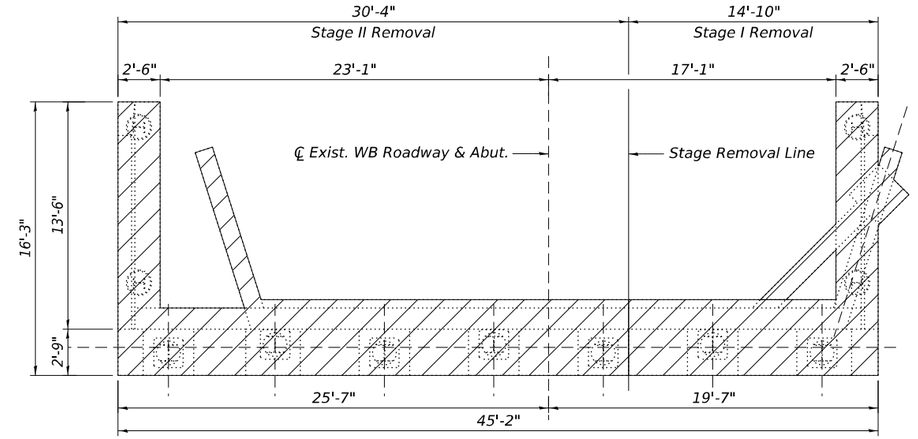

REMOVAL PLAN - EAST ABUTMENT

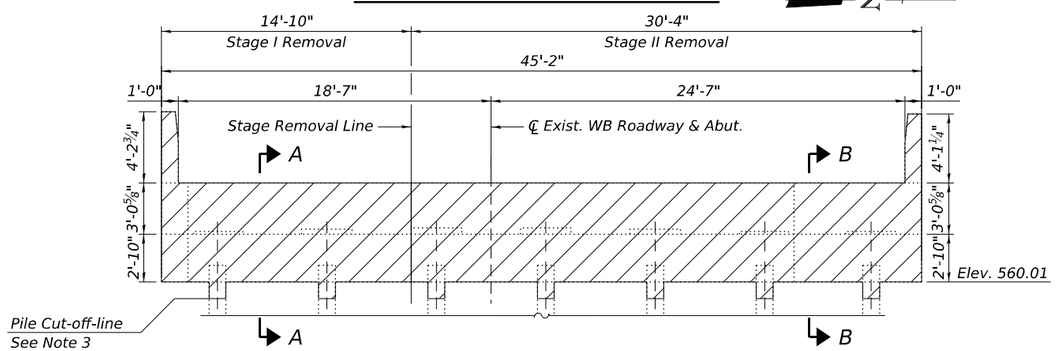

REMOVAL ELEVATION - WEST ABUTMENT

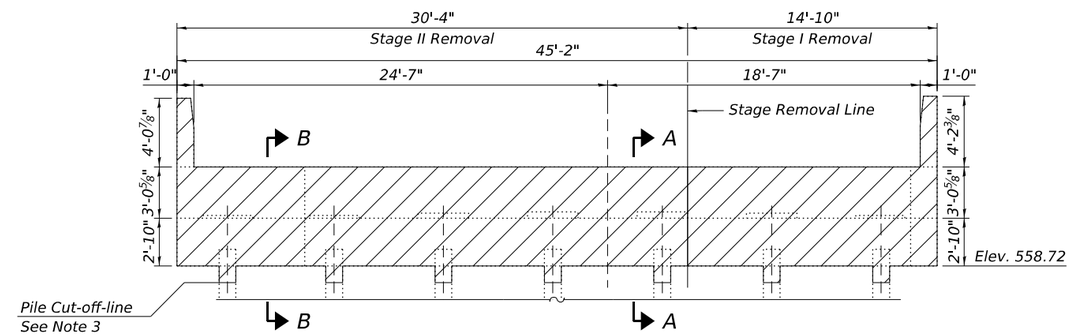

REMOVAL ELEVATION - EAST ABUTMENT

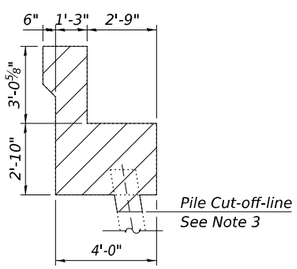

SECTION A-A

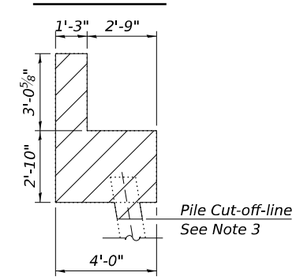

SECTION B-B

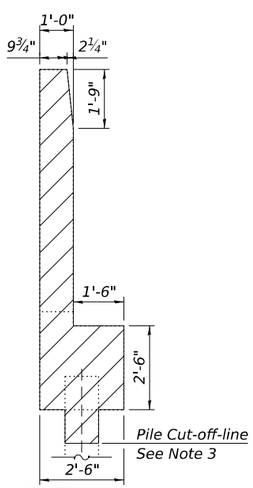

SECTION C-C

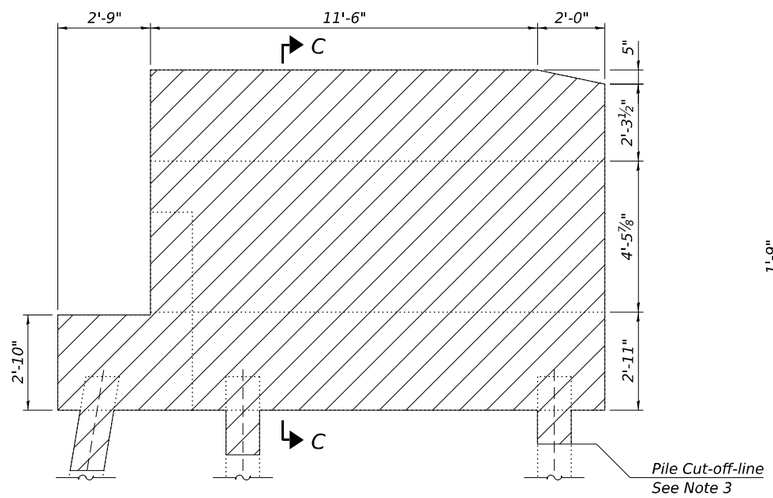

REMOVAL ELEVATION - TYPICAL WINGWALL

(NW Wingwall shown, typical at East & West abutments)

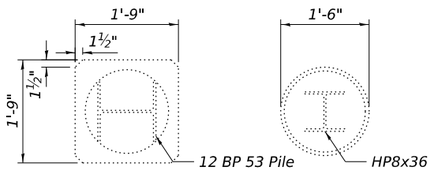

SECTION THRU PILE ENCASEMENT

NOTES:

1. For additional Notes, see Sheet SA-10.
2. Existing Creosoted Timber Piles and Pile encasement concrete removals shall not be paid separately but shall be included in the cost of Removal of Existing Structures No. 1.
3. For Pile Removal Elevations, see Sheet SA-10.

LEGEND:

Removal of Existing Structures No. 2

MODEL: Default
FILE NAME: pw://transystems-pw.bentley.com:transyscorp-pw1-hosted/Documents/Projects_2018/CH401/401180022/01-Stantec/CAD/ML-04_62R28/04-Sheets/04-Structures/0998312_0998313-ML-04-011-WB Exist. Struct. Rem. Detail (Sht 1 of 3).dgn
10/9/2023 3:22:35 PM

HBM ENGINEERING GROUP, LLC

USER NAME =	DESIGNED - KJD	REVISED -	
	CHECKED - MI, JJS	REVISED -	
PLOT SCALE =	DRAWN - KJD	REVISED -	
PLOT DATE =	CHECKED - MI, JJS	REVISED -	

STATE OF ILLINOIS
DEPARTMENT OF TRANSPORTATION

WB EXIST. STRUCT. REM. SECTIONS & DETAILS (SHT 1 OF 3)
STRUCTURE NOS. 099-8312 (EB) & 099-8313 (WB)

SHEET SA-11 OF SA-98 SHEETS

F.A.I. RTE.	SECTION	COUNTY	TOTAL SHEETS	SHEET NO.
I-80	FAI 80 21 STRUCTURE 7	WILL	1059	544
		CONTRACT NO. 62R28		
	ILLINOIS	FED. AID PROJECT		

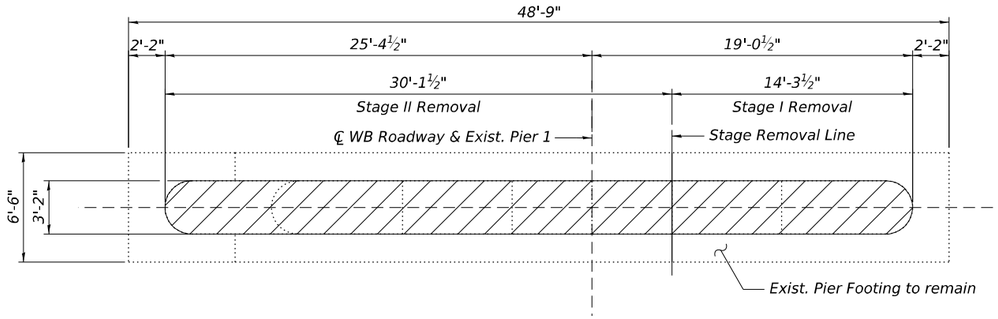

PLAN - PIER 1 REMOVAL

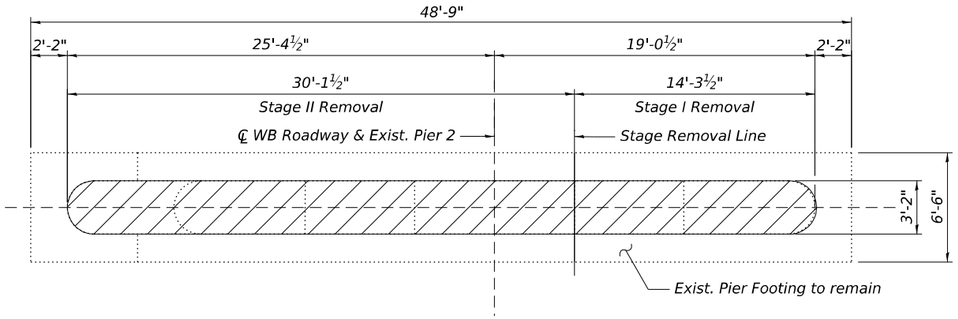

PLAN - PIER 2 REMOVAL

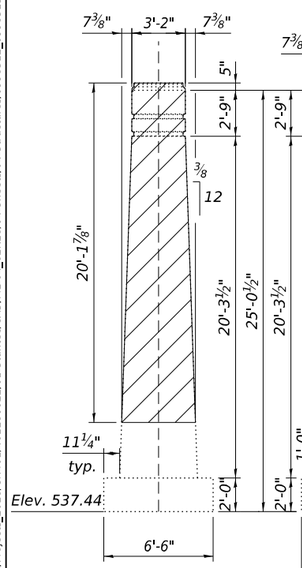

SIDE ELEVATION - PIER 1

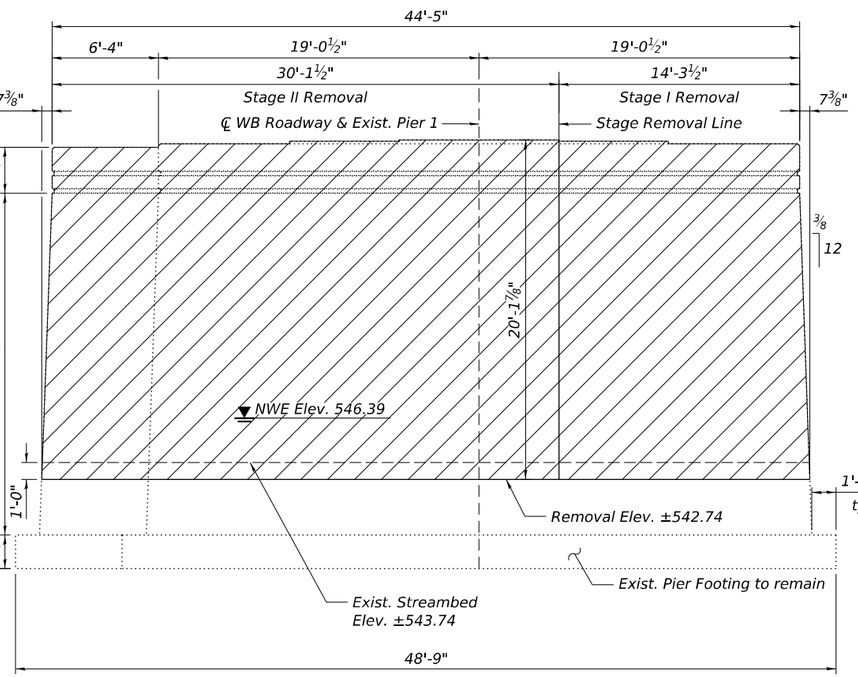

ELEVATION - PIER 1 REMOVAL

(Looking East)

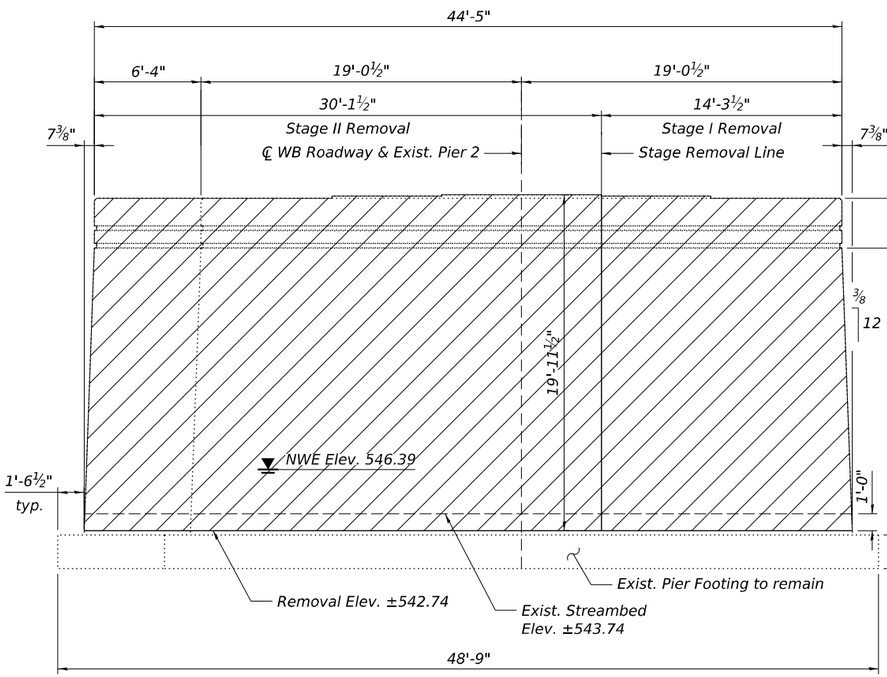

ELEVATION - PIER 2 REMOVAL

(Looking East)

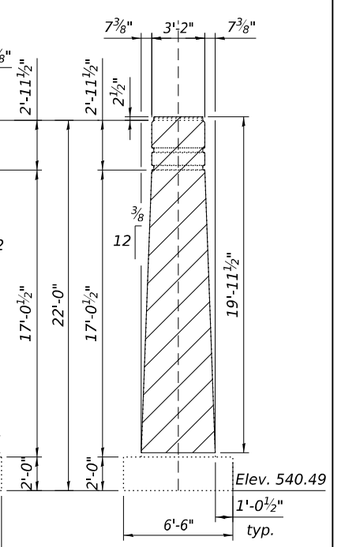

SIDE ELEVATION - PIER 2

NOTE:

1. For additional notes, see Sheet SA-10.

LEGEND:

Removal of Existing Structures No. 2

MODEL: Default
FILE NAME: pw://transystems-pw.bentley.com:transyscorp-pw1-hosted/Documents/Projects_2018/CH401/401180022/01-Stantec/CAD/ML-04_62R28/04-Sheets/04-Structures/0998312_0998313-ML-04-012-WB Exist. Struct. Rem. Detail (Sht 2 of 3).dgn

10/9/2023 3:22:38 PM

HBM ENGINEERING GROUP, LLC

USER NAME =	DESIGNED - KJD	REVISED -	
	CHECKED - MI, JJS	REVISED -	
PLOT SCALE =	DRAWN - KJD	REVISED -	
PLOT DATE =	CHECKED - MI, JJS	REVISED -	

STATE OF ILLINOIS
DEPARTMENT OF TRANSPORTATION

WB EXIST. STRUCT. REM. SECTIONS & DETAILS (SHT 2 OF 3)
STRUCTURE NOS. 099-8312 (EB) & 099-8313 (WB)

SHEET SA-12 OF SA-98 SHEETS

F.A.I. RTE.	SECTION	COUNTY	TOTAL SHEETS	SHEET NO.
I-80	FAI 80 21 STRUCTURE 7	WILL	1059	545
		CONTRACT NO. 62R28		
		ILLINOIS	FED. AID PROJECT	

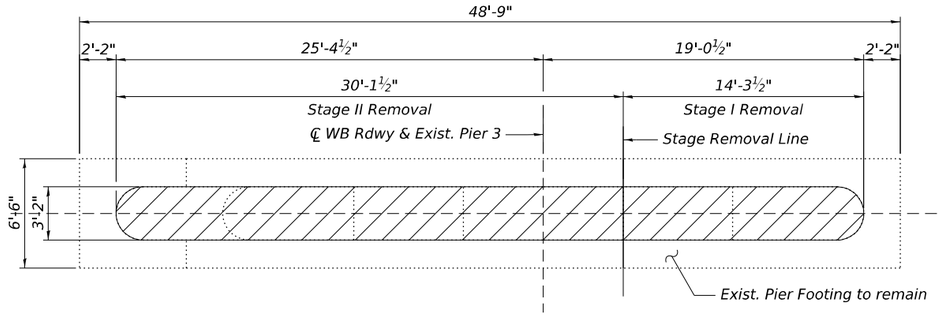

PLAN - PIER 3 REMOVAL

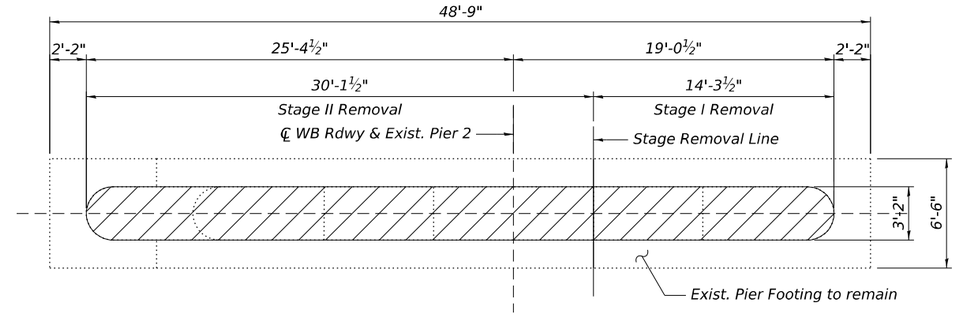

PLAN - PIER 4 REMOVAL

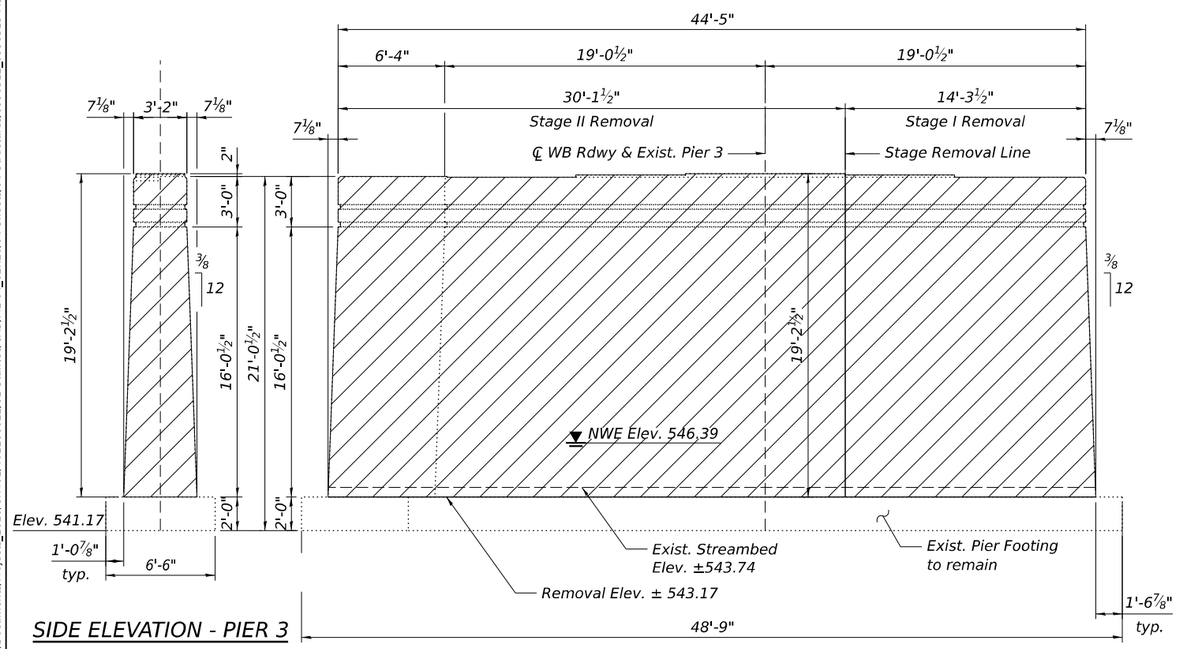

SIDE ELEVATION - PIER 3

ELEVATION - PIER 3 REMOVAL

(Looking East)

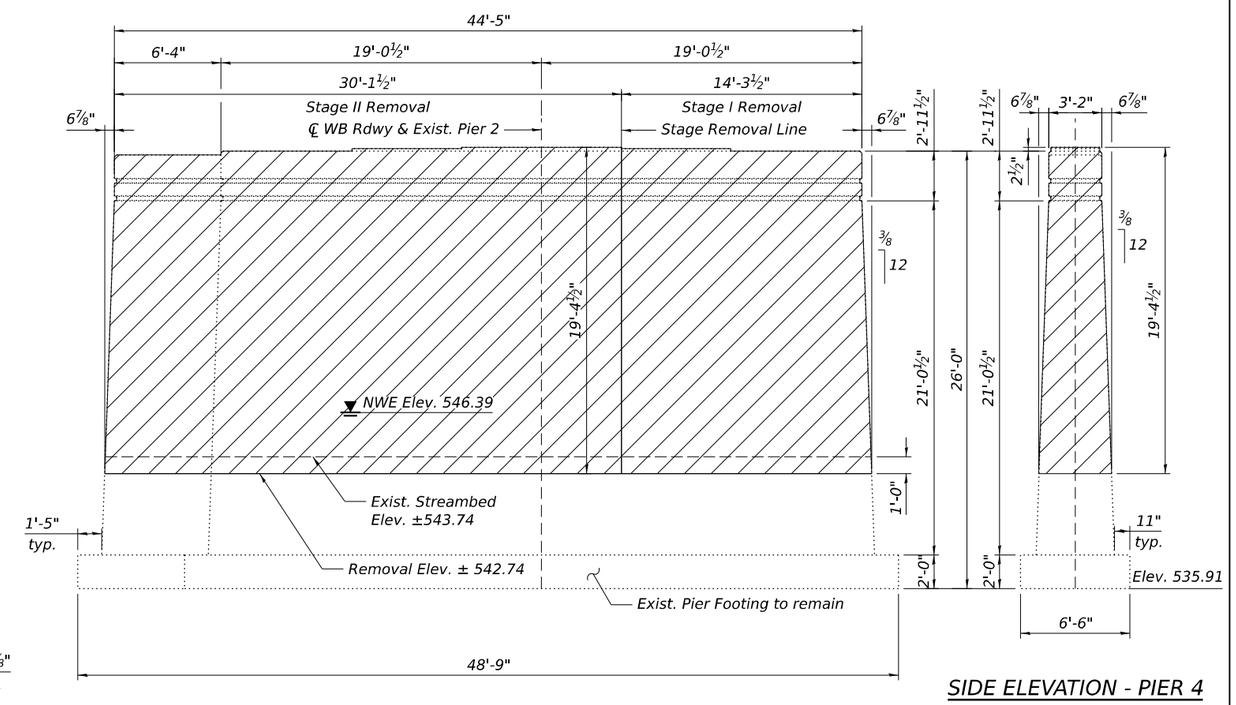

SIDE ELEVATION - PIER 4

ELEVATION - PIER 4 REMOVAL

(Looking East)

NOTE:

1. For additional notes, see Sheet SA-10.

LEGEND:

Removal of Existing Structures No. 2

MODEL: Default
FILE NAME: pw://transystems-pw.bentley.com:transyscorp-pw1-hosted/Documents/Projects_2018/CH401/401180022/01-Stantec/CAD/MI-04_62R28/04-Sheets/04-Structures/0998312_0998313-MI-04-013-WB Exist. Struct. Rem. Detail (Sht 3 of 3).dgn

10/9/2023 3:22:40 PM

HBM ENGINEERING GROUP, LLC

USER NAME =	DESIGNED - KJD	REVISED -	
	CHECKED - MI, JJS	REVISED -	
PLOT SCALE =	DRAWN - KJD	REVISED -	
PLOT DATE =	CHECKED - MI, JJS	REVISED -	

STATE OF ILLINOIS
DEPARTMENT OF TRANSPORTATION

WB EXIST. STRUCT. REM. SECTIONS & DETAILS (SHT 3 OF 3)
STRUCTURE NOS. 099-8312 (EB) & 099-8313 (WB)

SHEET SA-13 OF SA-98 SHEETS

F.A.I. RTE.	SECTION	COUNTY	TOTAL SHEETS	SHEET NO.
I-80	FAI 80 21 STRUCTURE 7	WILL	1059	546
		CONTRACT NO. 62R28		
		ILLINOIS	FED. AID PROJECT	

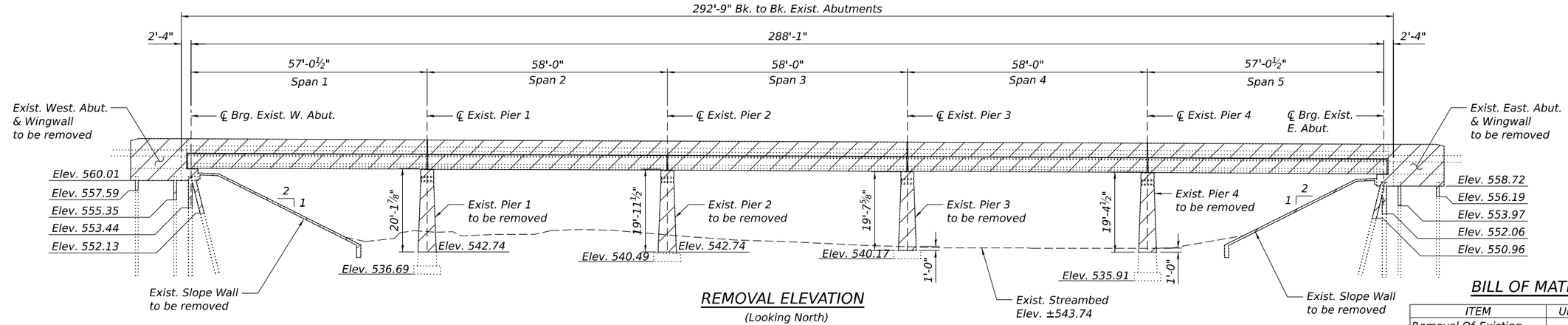

REMOVAL ELEVATION

(Looking North)

BILL OF MATERIAL

ITEM	UNIT	TOTAL
Removal Of Existing Structures No. 1	Each	1

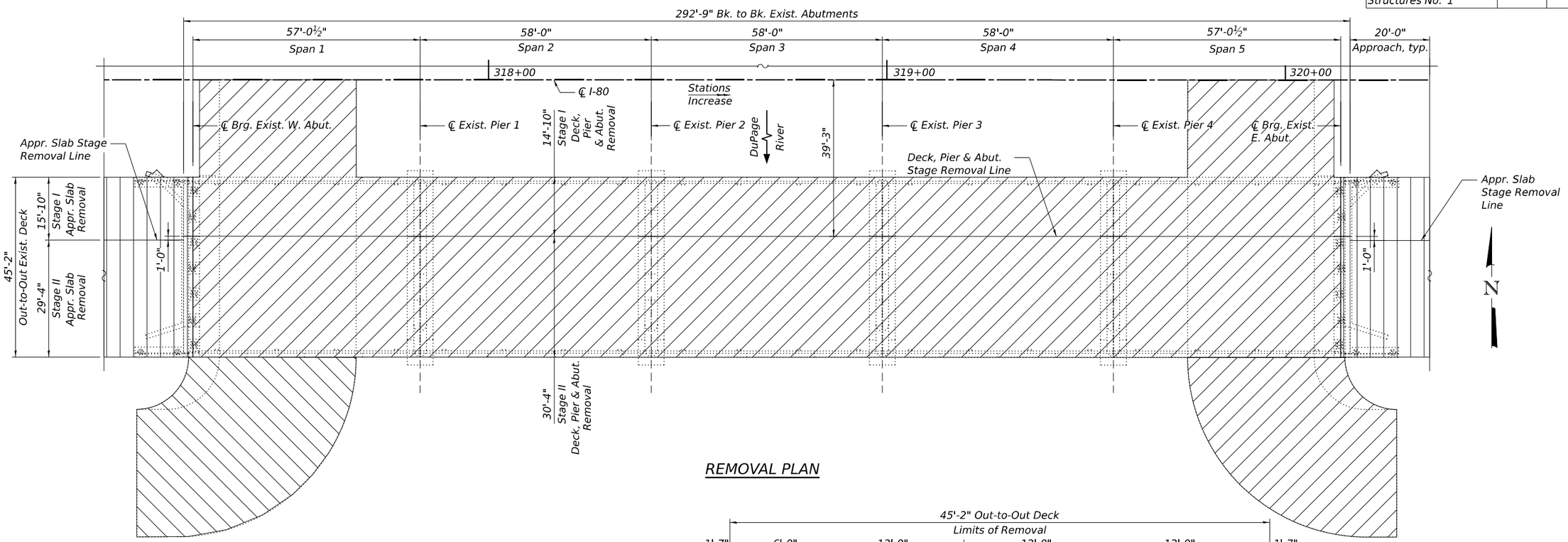

REMOVAL PLAN

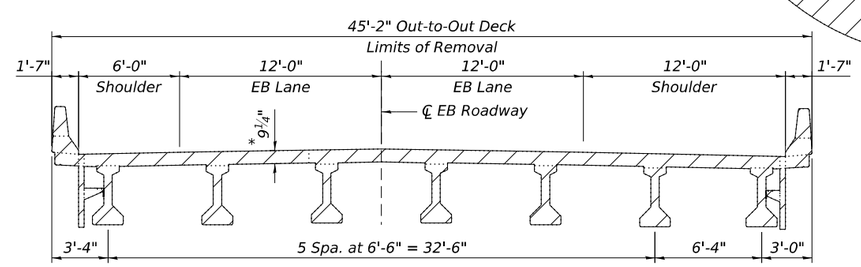

EXISTING DECK CROSS SECTION

(Looking East)

* 7" Exist. Deck w/ 2¼" Latex Modified Concrete Overlay

NOTES:

1. For suggested stages of construction and sequencing requirements, see Roadway Plans and Special Provisions.
2. For substructure removal details, see Sheets SA-15 thru SA-17.
3. For Temporary Soil Retention System limits and details, see Sheet SA-09.
4. The Contractor shall take all necessary precautions to protect existing utilities, foundations and adjacent structures during removal/construction of the bridge.
5. Existing Piers shall be removed according to Art. 501.05 of the Standard Specifications and as shown in the Plans.
6. For Approach Slab Removal, See Roadway Plans.

LEGEND

Removal of Existing Structures No. 1

Approach Slab Removal (See Roadway Plans)

HBM ENGINEERING GROUP, LLC

USER NAME =	DESIGNED - KJD	REVISED -	
	CHECKED - MI, JJS	REVISED -	
PLOT SCALE =	DRAWN - KJD	REVISED -	
PLOT DATE =	CHECKED - MI, JJS	REVISED -	

STATE OF ILLINOIS
DEPARTMENT OF TRANSPORTATION

EB EXIST. STRUCT. REM. PLAN AND ELEVATION
STRUCTURE NOS. 099-8312 (EB) & 099-8313 (WB)

SHEET SA-14 OF SA-98 SHEETS

F.A.I. RTE.	SECTION	COUNTY	TOTAL SHEETS	SHEET NO.
I-80	FAI 80 21 STRUCTURE 7	WILL	1059	547
		CONTRACT NO. 62R28		
		ILLINOIS	FED. AID PROJECT	

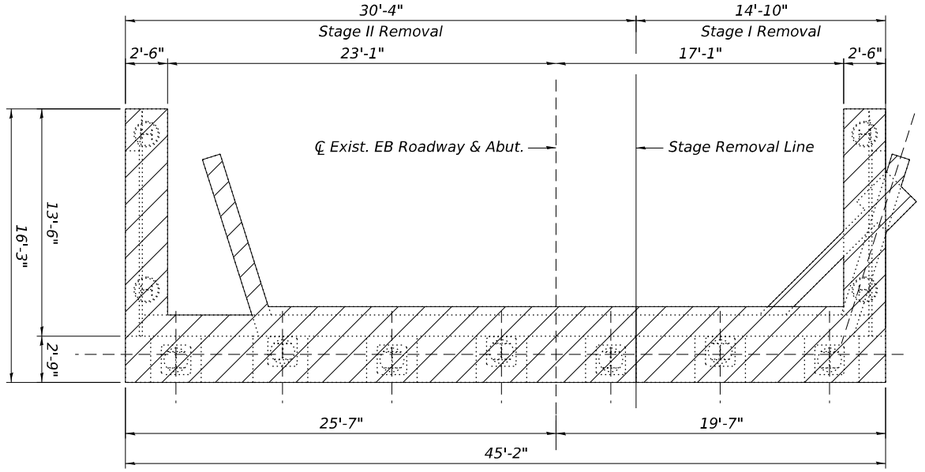

REMOVAL PLAN - WEST ABUTMENT

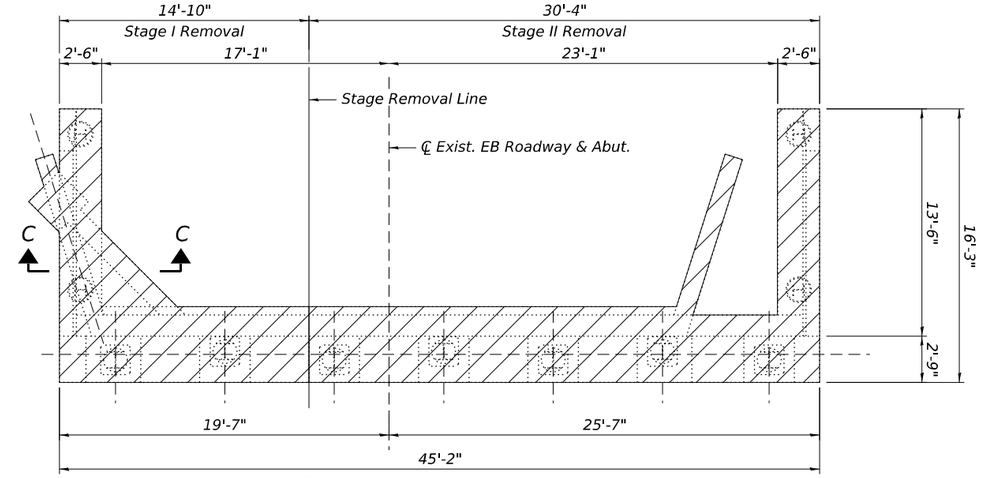

REMOVAL PLAN - EAST ABUTMENT

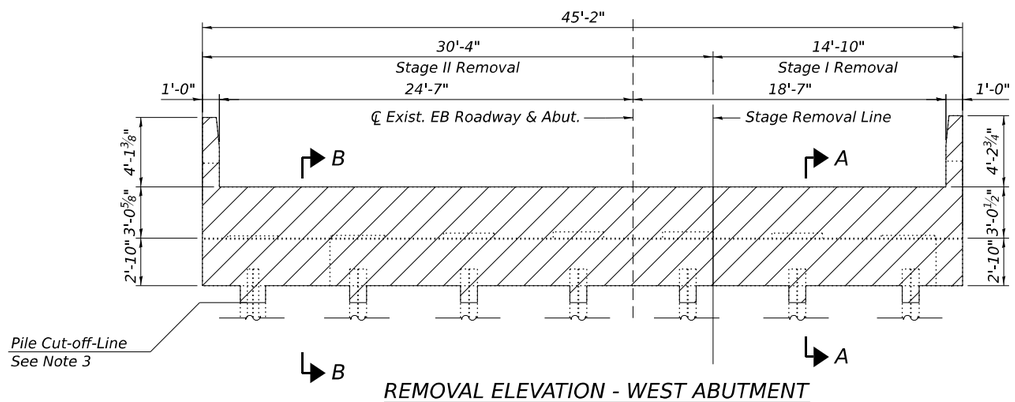

REMOVAL ELEVATION - WEST ABUTMENT

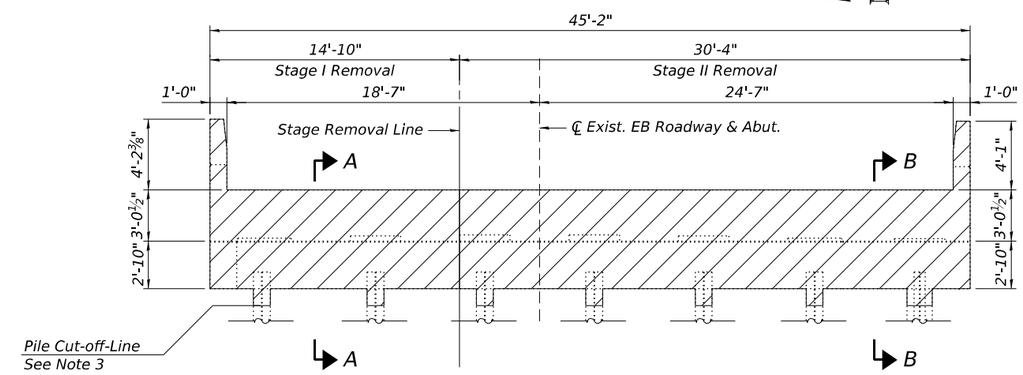

REMOVAL ELEVATION - EAST ABUTMENT

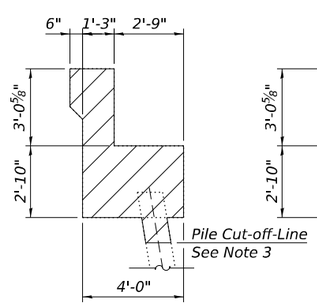

SECTION A-A

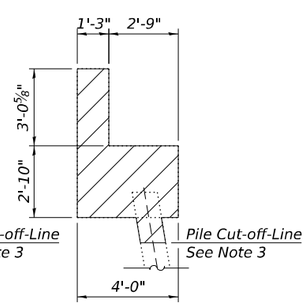

SECTION B-B

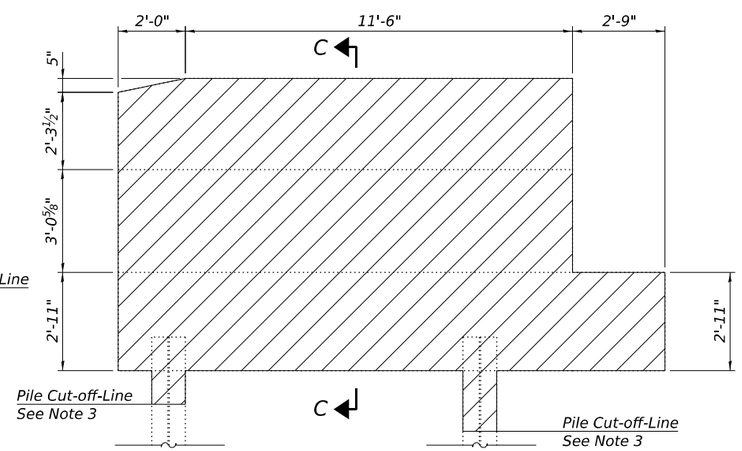

REMOVAL ELEVATION - TYPICAL WINGWALL

(Structure No. 099-8312)

(NE Wingwall Shown, typ. at East and West Abutments)

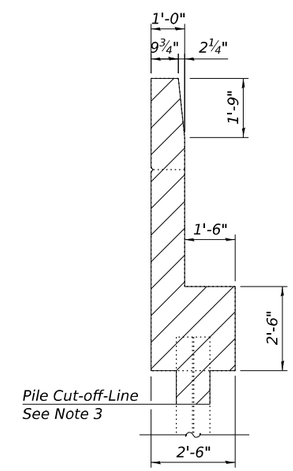

SECTION C-C

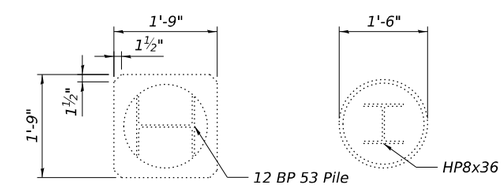

SECTION THRU PILE ENCASEMENT

NOTES:

1. For additional Notes, see Sheet SA-14.
2. Existing Creosoted Timber Piles and Pile encasement concrete removals shall not be paid separately but shall be included in the cost of Removal of Existing Structures No. 2.
3. For Pile Removal Elevations, see Sheet SA-14.

LEGEND:

Removal of Existing Structures No. 1

HBM ENGINEERING GROUP, LLC

USER NAME =	DESIGNED - KJD	REVISED -	
	CHECKED - MI, JJS	REVISED -	
PLOT SCALE =	DRAWN - KJD	REVISED -	
PLOT DATE =	CHECKED - MI, JJS	REVISED -	

STATE OF ILLINOIS
DEPARTMENT OF TRANSPORTATION

EB EXIST. STRUCT. REM. SECTIONS & DETAILS (SHT 1 OF 3)
STRUCTURE NOS. 099-8312 (EB) & 099-8313 (WB)

SHEET SA-15 OF SA-98 SHEETS

F.A.I. RTE.	SECTION	COUNTY	TOTAL SHEETS	SHEET NO.
I-80	FAI 80 21 STRUCTURE 7	WILL	1059	548
		CONTRACT NO. 62R28		
	ILLINOIS	FED. AID PROJECT		

MODEL: Default
FILE NAME: pw://transystems-pw.bentley.com:transyscorp-pw1-hosted/Documents/Projects_2018/CH401/401180022/01-Stantec/CAD/MI-04_62R28/04-Sheets/04-Structures/0998312_0998313-MI-04-015-EB Exist. Struct. Rem. Detail (Sht 1 of 3).dgn

10/9/2023 3:23:14 PM

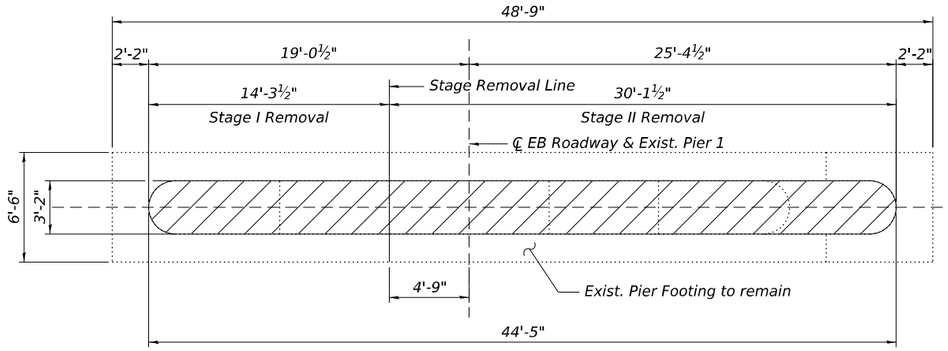

PLAN - PIER 1 REMOVAL

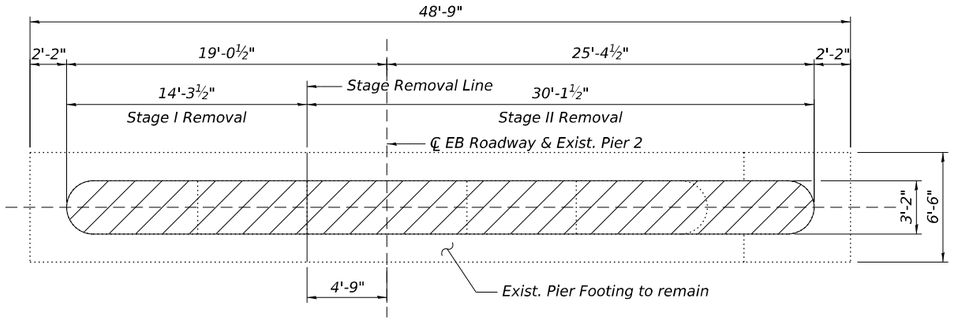

PLAN - PIER 2 REMOVAL

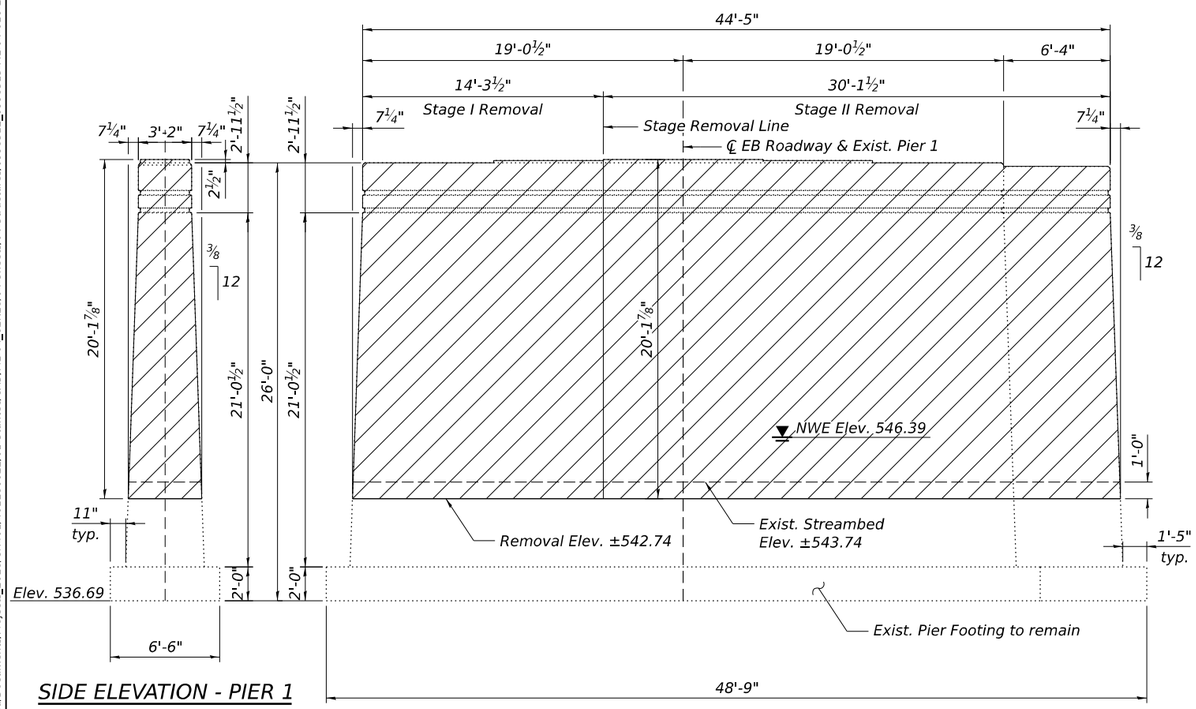

SIDE ELEVATION - PIER 1

ELEVATION - PIER 1 REMOVAL

(Looking East)

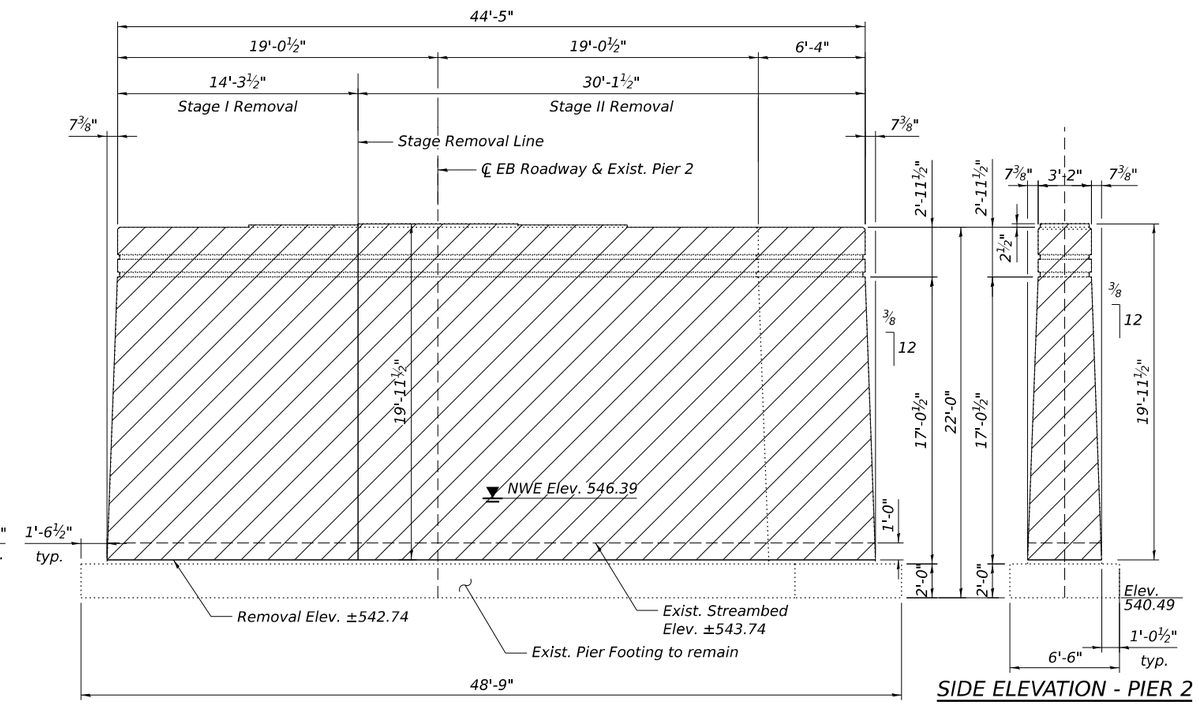

SIDE ELEVATION - PIER 2

ELEVATION - PIER 2 REMOVAL

(Looking East)

NOTE:

1. For additional notes, see Sheet SA-14.

LEGEND:

Removal of Existing Structures No. 1

MODEL: Default
FILE NAME: pw://transystems-pw.bentley.com:transyscorp-pw1-hosted/Documents/Projects_2018/CH401/401180022/01-Stantec/CAD/ML-04_62R28/04-Sheets/04-Structures/0998312_0998313-ML-04-016-EB Exist. Struct. Rem. Detail (Sht 2 of 3).dgn

10/9/2023 3:23:17 PM

HBM ENGINEERING GROUP, LLC

USER NAME =	DESIGNED - KJD	REVISED -	
	CHECKED - MI, JJS	REVISED -	
PLOT SCALE =	DRAWN - KJD	REVISED -	
PLOT DATE =	CHECKED - MI, JJS	REVISED -	

STATE OF ILLINOIS
DEPARTMENT OF TRANSPORTATION

EB EXIST. STRUCT. REM. SECTIONS & DETAILS (SHT 2 OF 3)
STRUCTURE NOS. 099-8312 (EB) & 099-8313 (WB)

SHEET SA-16 OF SA-98 SHEETS

F.A.I. RTE.	SECTION	COUNTY	TOTAL SHEETS	SHEET NO.
I-80	FAI 80 21 STRUCTURE 7	WILL	1059	549
		CONTRACT NO. 62R28		
		ILLINOIS	FED. AID PROJECT	

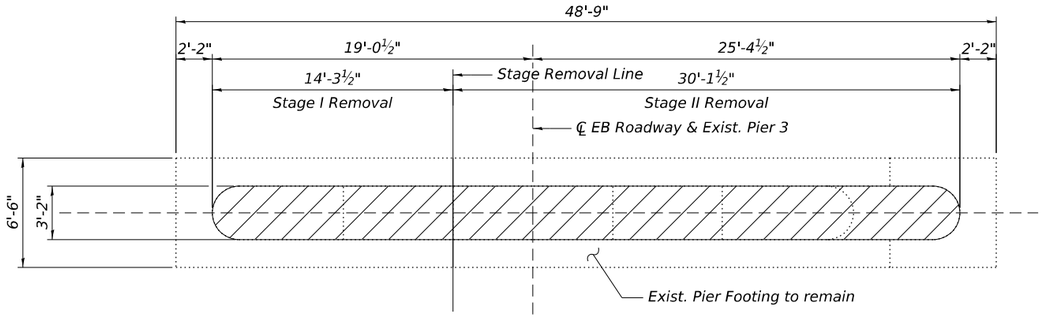

PLAN - PIER 3 REMOVAL

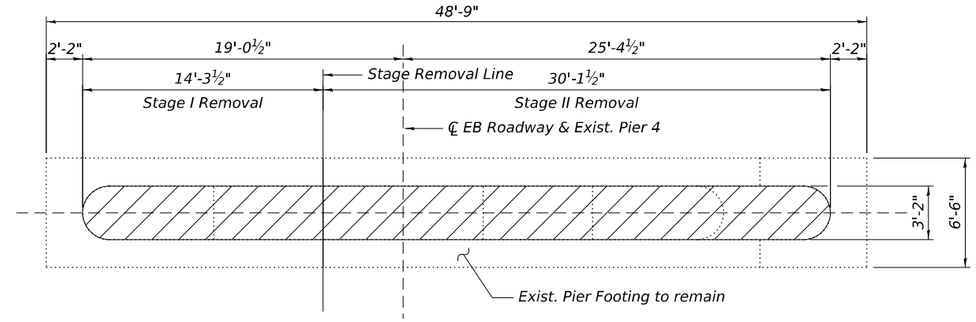

PLAN - PIER 4 REMOVAL

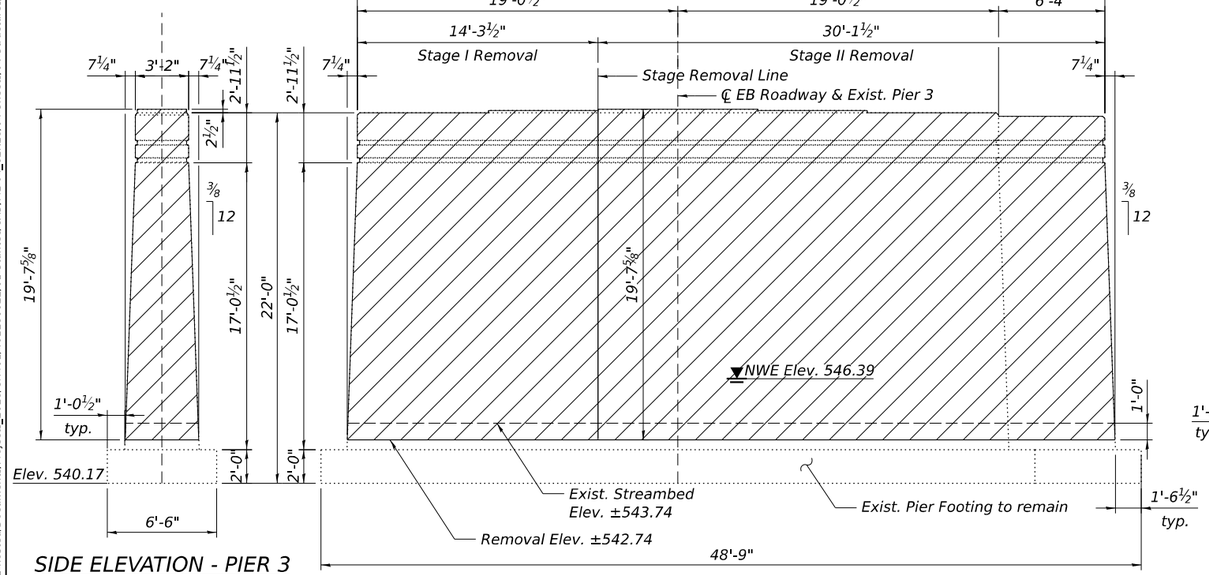

SIDE ELEVATION - PIER 3

ELEVATION - PIER 3 REMOVAL

(Looking East)

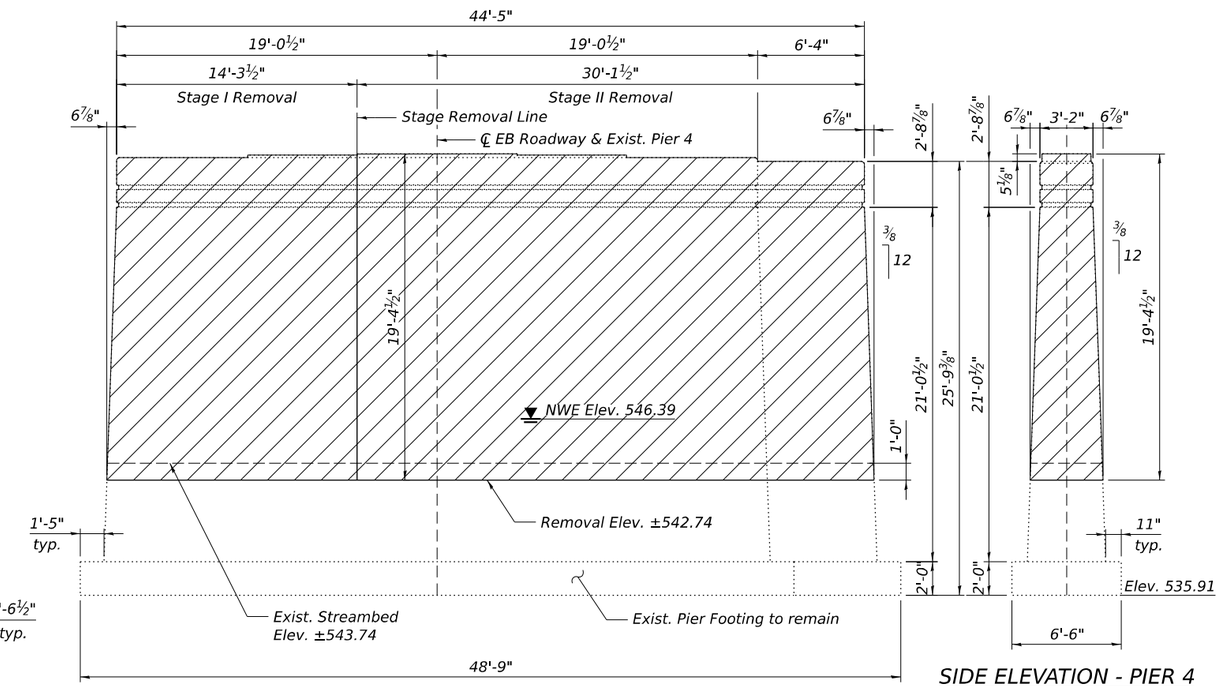

SIDE ELEVATION - PIER 4

ELEVATION - PIER 4 REMOVAL

(Looking East)

LEGEND:

Removal of Existing Structures No. 1

NOTE:

1. For additional notes, see Sheet SA-14.

HBM ENGINEERING GROUP, LLC	USER NAME =	DESIGNED - KJD	REVISED -	STATE OF ILLINOIS DEPARTMENT OF TRANSPORTATION
		CHECKED - MI, JJS	REVISED -	
	PLOT SCALE =	DRAWN - KJD	REVISED -	
	PLOT DATE =	CHECKED - MI, JJS	REVISED -	

EB EXIST. STRUCT. REM. SECTIONS & DETAILS (SHT 3 OF 3)
STRUCTURE NOS. 099-8312 (EB) & 099-8313 (WB)

SHEET SA-17 OF SA-98 SHEETS

F.A.I. RTE.	SECTION	COUNTY	TOTAL SHEETS	SHEET NO.
I-80	FAI 80 21 STRUCTURE 7	WILL	1059	550
		CONTRACT NO. 62R28		
		ILLINOIS	FED. AID PROJECT	

MODEL: Default
FILE NAME: pw://transystems-pw.bentley.com:transyscorp-pw1-hosted/Documents/Projects_2018/CH401/401180022/01-Stantec/CAD/ML-04_62R28/04-Sheets/04-Structures/0998312_0998313-ML-04-017-EB Exist. Struct. Rem. Detail (Sht 3 of 3).dgn

10/9/2023 3:23:20 PM

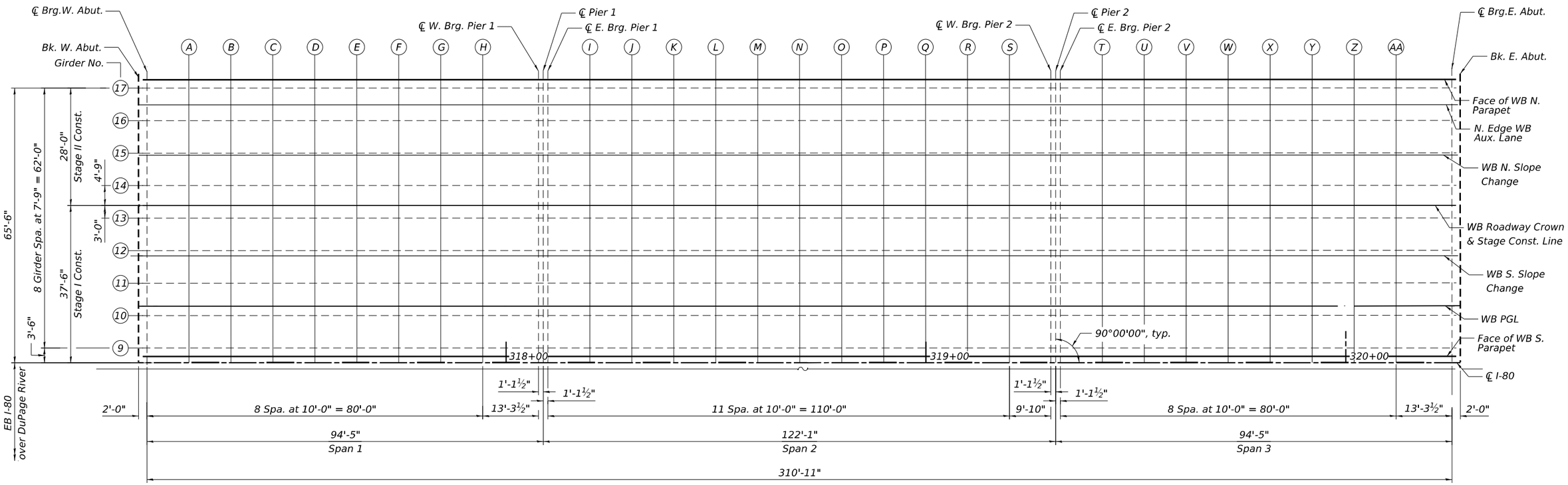

PLAN

N

Girder #	Span 1			Span 2			Span 3		
	A1	B1	C1	A2	B2	C2	A3	B3	C3
9-17	5/8"	1"	5/8"	1 7/8"	2 5/8"	1 7/8"	5/8"	1"	5/8"

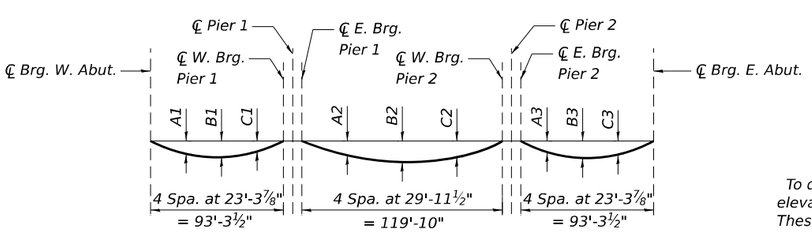

DEAD LOAD DEFLECTION

(Includes weight of concrete only, excluding beams)

Note:
The above deflections are not to be used in the field if the engineer is working from the grade elevations adjusted for dead load deflections and grinding as shown on Sheets SA-19 thru SA-24.

FILLET HEIGHTS

To determine "t": After all precast prestressed beams have been erected, elevations of the top flanges of the beams shall be taken at intervals shown above. These elevations subtracted from the "Theoretical Grade Elevations Adjusted for Dead Load Deflection and Grinding" shown on Sheets SA-19 thru SA-24, minus the initial slab thickness prior to grinding, equals the fillet heights "t" above top flange of beams.

The slab is to be ground after curing to achieve smoothness, but the slab is not to be ground to elevations below the "Theoretical Grade Elevations" shown on Sheets SA-19 thru SA-24. For grinding the deck, see Special Provisions.

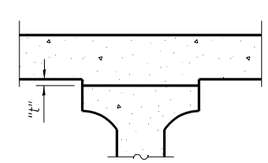

INTERIOR BEAMS

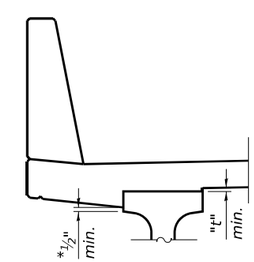

At Minimum Fillet

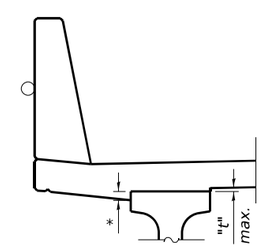

At Maximum Fillet

* Variable (not less than ½")

EXTERIOR BEAMS

MODEL: Default
FILE NAME: pw://transystems-pw.bentley.com:transyscorp-pw1-hosted/Documents/Projects_2018/CH401/401180022/01-Stantec/CAD/ML-04_62R28/04-Sheets/04-Structures/0998312_0998313-ML-04-018-WB Top of Slab Elevation Layout.dgn

HBM ENGINEERING GROUP, LLC

USER NAME =	DESIGNED - LAB	REVISED -
	CHECKED - MI, PG	REVISED -
PLOT SCALE =	DRAWN - LAB	REVISED -
PLOT DATE =	CHECKED - MI, PG	REVISED -

STATE OF ILLINOIS
DEPARTMENT OF TRANSPORTATION

WB TOP OF SLAB ELEVATION LAYOUT
STRUCTURE NOS. 099-8312 (EB) & 099-8313 (WB)

SHEET SA-18 OF SA-98 SHEETS

F.A.I. RTE.	SECTION	COUNTY	TOTAL SHEETS	SHEET NO.
I-80	FAI 80 21 STRUCTURE 7	WILL	1059	551
		CONTRACT NO. 62R28		
	ILLINOIS	FED. AID PROJECT		

10/9/2023 3:23:57 PM

FACE OF WB S. PARAPET

Location	Station	Offset	Theoretical Grade Elevations	Theoretical Grade Elevations Adjusted For Dead Load Deflection and Grinding
BK. W. ABUT.	317+12.40	12.00'	567.79	567.81
CL. BRG. W. ABUT.	317+14.40	12.00'	567.78	567.80
A	317+24.40	12.00'	567.74	567.78
B	317+34.40	12.00'	567.69	567.76
C	317+44.40	12.00'	567.65	567.74
D	317+54.40	12.00'	567.60	567.70
E	317+64.40	12.00'	567.56	567.66
F	317+74.40	12.00'	567.51	567.61
G	317+84.40	12.00'	567.47	567.55
H	317+94.40	12.00'	567.43	567.48
CL. W. BRG. PIER 1	318+07.69	12.00'	567.37	567.39
CL. PIER 1	318+08.81	12.00'	567.36	567.38
CL. E. BRG. PIER 1	318+09.94	12.00'	567.36	567.38
I	318+19.94	12.00'	567.31	567.39
J	318+29.94	12.00'	567.27	567.40
K	318+39.94	12.00'	567.22	567.40
L	318+49.94	12.00'	567.18	567.39
M	318+59.94	12.00'	567.13	567.37
N	318+69.94	12.00'	567.09	567.33
O	318+79.94	12.00'	567.05	567.28
P	318+89.94	12.00'	567.00	567.21
Q	318+99.94	12.00'	566.96	567.13
R	319+09.94	12.00'	566.91	567.04
S	319+19.94	12.00'	566.87	566.94
CL. W. BRG. PIER 2	319+29.77	12.00'	566.82	566.84
CL. PIER 2	319+30.90	12.00'	566.82	566.84
CL. E. BRG. PIER 2	319+32.02	12.00'	566.81	566.83
T	319+42.02	12.00'	566.77	566.82
U	319+52.02	12.00'	566.72	566.79
V	319+62.02	12.00'	566.68	566.77
W	319+72.02	12.00'	566.64	566.73
X	319+82.02	12.00'	566.59	566.69
Y	319+92.02	12.00'	566.55	566.64
Z	320+02.02	12.00'	566.50	566.58
AA	320+12.02	12.00'	566.46	566.51
CL. BRG. E. ABUT.	320+25.31	12.00'	566.40	566.42
BK. E. ABUT.	320+27.31	12.00'	566.39	566.41

BEAM 9

Location	Station	Offset	Theoretical Grade Elevations	Theoretical Grade Elevations Adjusted For Dead Load Deflection and Grinding
BK. W. ABUT.	317+12.40	10.00'	567.83	567.85
CL. BRG. W. ABUT.	317+14.40	10.00'	567.82	567.84
A	317+24.40	10.00'	567.78	567.82
B	317+34.40	10.00'	567.73	567.80
C	317+44.40	10.00'	567.69	567.78
D	317+54.40	10.00'	567.64	567.74
E	317+64.40	10.00'	567.60	567.70
F	317+74.40	10.00'	567.55	567.65
G	317+84.40	10.00'	567.51	567.59
H	317+94.40	10.00'	567.47	567.52
CL. W. BRG. PIER 1	318+07.69	10.00'	567.41	567.43
CL. PIER 1	318+08.81	10.00'	567.40	567.42
CL. E. BRG. PIER 1	318+09.94	10.00'	567.40	567.42
I	318+19.94	10.00'	567.35	567.43
J	318+29.94	10.00'	567.31	567.44
K	318+39.94	10.00'	567.26	567.44
L	318+49.94	10.00'	567.22	567.43
M	318+59.94	10.00'	567.17	567.41
N	318+69.94	10.00'	567.13	567.37
O	318+79.94	10.00'	567.09	567.32
P	318+89.94	10.00'	567.04	567.25
Q	318+99.94	10.00'	567.00	567.17
R	319+09.94	10.00'	566.95	567.08
S	319+19.94	10.00'	566.91	566.98
CL. W. BRG. PIER 2	319+29.77	10.00'	566.86	566.88
CL. PIER 2	319+30.90	10.00'	566.86	566.88
CL. E. BRG. PIER 2	319+32.02	10.00'	566.85	566.87
T	319+42.02	10.00'	566.81	566.86
U	319+52.02	10.00'	566.76	566.83
V	319+62.02	10.00'	566.72	566.81
W	319+72.02	10.00'	566.68	566.77
X	319+82.02	10.00'	566.63	566.73
Y	319+92.02	10.00'	566.59	566.68
Z	320+02.02	10.00'	566.54	566.62
AA	320+12.02	10.00'	566.50	566.55
CL. BRG. E. ABUT.	320+25.31	10.00'	566.44	566.46
BK. E. ABUT.	320+27.31	10.00'	566.43	566.45

BEAM 10

Location	Station	Offset	Theoretical Grade Elevations	Theoretical Grade Elevations Adjusted For Dead Load Deflection and Grinding
BK. W. ABUT.	317+12.40	2.25'	567.99	568.01
CL. BRG. W. ABUT.	317+14.40	2.25'	567.98	568.00
A	317+24.40	2.25'	567.93	567.98
B	317+34.40	2.25'	567.89	567.96
C	317+44.40	2.25'	567.84	567.93
D	317+54.40	2.25'	567.80	567.90
E	317+64.40	2.25'	567.75	567.85
F	317+74.40	2.25'	567.71	567.80
G	317+84.40	2.25'	567.67	567.74
H	317+94.40	2.25'	567.62	567.68
CL. W. BRG. PIER 1	318+07.69	2.25'	567.56	567.58
CL. PIER 1	318+08.81	2.25'	567.56	567.58
CL. E. BRG. PIER 1	318+09.94	2.25'	567.55	567.57
I	318+19.94	2.25'	567.51	567.59
J	318+29.94	2.25'	567.46	567.59
K	318+39.94	2.25'	567.42	567.59
L	318+49.94	2.25'	567.37	567.58
M	318+59.94	2.25'	567.33	567.56
N	318+69.94	2.25'	567.28	567.52
O	318+79.94	2.25'	567.24	567.47
P	318+89.94	2.25'	567.20	567.41
Q	318+99.94	2.25'	567.15	567.33
R	319+09.94	2.25'	567.11	567.24
S	319+19.94	2.25'	567.06	567.14
CL. W. BRG. PIER 2	319+29.77	2.25'	567.02	567.04
CL. PIER 2	319+30.90	2.25'	567.01	567.03
CL. E. BRG. PIER 2	319+32.02	2.25'	567.01	567.03
T	319+42.02	2.25'	566.96	567.01
U	319+52.02	2.25'	566.92	566.99
V	319+62.02	2.25'	566.87	566.96
W	319+72.02	2.25'	566.83	566.93
X	319+82.02	2.25'	566.79	566.88
Y	319+92.02	2.25'	566.74	566.83
Z	320+02.02	2.25'	566.70	566.77
AA	320+12.02	2.25'	566.65	566.71
CL. BRG. E. ABUT.	320+25.31	2.25'	566.59	566.61
BK. E. ABUT.	320+27.31	2.25'	566.58	566.60

WB PGL

Location	Station	Offset	Theoretical Grade Elevations	Theoretical Grade Elevations Adjusted For Dead Load Deflection and Grinding
BK. W. ABUT.	317+12.40	0.00'	568.03	568.05
CL. BRG. W. ABUT.	317+14.40	0.00'	568.02	568.04
A	317+24.40	0.00'	567.98	568.02
B	317+34.40	0.00'	567.93	568.00
C	317+44.40	0.00'	567.89	567.98
D	317+54.40	0.00'	567.84	567.94
E	317+64.40	0.00'	567.80	567.90
F	317+74.40	0.00'	567.75	567.85
G	317+84.40	0.00'	567.71	567.79
H	317+94.40	0.00'	567.67	567.72
CL. W. BRG. PIER 1	318+07.69	0.00'	567.61	567.63
CL. PIER 1	318+08.81	0.00'	567.60	567.62
CL. E. BRG. PIER 1	318+09.94	0.00'	567.60	567.62
I	318+19.94	0.00'	567.55	567.63
J	318+29.94	0.00'	567.51	567.64
K	318+39.94	0.00'	567.46	567.64
L	318+49.94	0.00'	567.42	567.63
M	318+59.94	0.00'	567.37	567.61
N	318+69.94	0.00'	567.33	567.57
O	318+79.94	0.00'	567.29	567.52
P	318+89.94	0.00'	567.24	567.45
Q	318+99.94	0.00'	567.20	567.37
R	319+09.94	0.00'	567.15	567.28
S	319+19.94	0.00'	567.11	567.18
CL. W. BRG. PIER 2	319+29.77	0.00'	567.06	567.08
CL. PIER 2	319+30.90	0.00'	567.06	567.08
CL. E. BRG. PIER 2	319+32.02	0.00'	567.05	567.07
T	319+42.02	0.00'	567.01	567.06
U	319+52.02	0.00'	566.96	567.03
V	319+62.02	0.00'	566.92	567.01
W	319+72.02	0.00'	566.88	566.97
X	319+82.02	0.00'	566.83	566.93
Y	319+92.02	0.00'	566.79	566.88
Z	320+02.02	0.00'	566.74	566.82
AA	320+12.02	0.00'	566.70	566.75
CL. BRG. E. ABUT.	320+25.31	0.00'	566.64	566.66
BK. E. ABUT.	320+27.31	0.00'	566.63	566.65

BEAM 11

Location	Station	Offset	Theoretical Grade Elevations	Theoretical Grade Elevations Adjusted For Dead Load Deflection and Grinding
BK. W. ABUT.	317+12.40	-5.50'	568.14	568.16
CL. BRG. W. ABUT.	317+14.40	-5.50'	568.13	568.15
A	317+24.40	-5.50'	568.09	568.13
B	317+34.40	-5.50'	568.04	568.11
C	317+44.40	-5.50'	568.00	568.09
D	317+54.40	-5.50'	567.95	568.05
E	317+64.40	-5.50'	567.91	568.01
F	317+74.40	-5.50'	567.86	567.96
G	317+84.40	-5.50'	567.82	567.90
H	317+94.40	-5.50'	567.78	567.83
CL. W. BRG. PIER 1	318+07.69	-5.50'	567.72	567.74
CL. PIER 1	318+08.81	-5.50'	567.71	567.73
CL. E. BRG. PIER 1	318+09.94	-5.50'	567.71	567.73
I	318+19.94	-5.50'	567.66	567.74
J	318+29.94	-5.50'	567.62	567.75
K	318+39.94	-5.50'	567.57	567.75
L	318+49.94	-5.50'	567.53	567.74
M	318+59.94	-5.50'	567.48	567.72
N	318+69.94	-5.50'	567.44	567.68
O	318+79.94	-5.50'	567.40	567.63
P	318+89.94	-5.50'	567.35	567.56
Q	318+99.94	-5.50'	567.31	567.48
R	319+09.94	-5.50'	567.26	567.39
S	319+19.94	-5.50'	567.22	567.29
CL. W. BRG. PIER 2	319+29.77	-5.50'	567.17	567.19
CL. PIER 2	319+30.90	-5.50'	567.17	567.19
CL. E. BRG. PIER 2	319+32.02	-5.50'	567.16	567.18
T	319+42.02	-5.50'	567.12	567.17
U	319+52.02	-5.50'	567.07	567.14
V	319+62.02	-5.50'	567.03	567.12
W	319+72.02	-5.50'	566.99	567.08
X	319+82.02	-5.50'	566.94	567.04
Y	319+92.02	-5.50'	566.90	566.99
Z	320+02.02	-5.50'	566.85	566.93
AA	320+12.02	-5.50'	566.81	566.86
CL. BRG. E. ABUT.	320+25.31	-5.50'	566.75	566.77
BK. E. ABUT.	320+27.31	-5.50'	566.74	566.76

WB S. SLOPE CHANGE

Location	Station	Offset	Theoretical Grade Elevations	Theoretical Grade Elevations Adjusted For Dead Load Deflection and Grinding
BK. W. ABUT.	317+12.40	-12.00'	568.27	568.29
CL. BRG. W. ABUT.	317+14.40	-12.00'	568.26	568.28
A	317+24.40	-12.00'	568.22	568.26
B	317+34.40	-12.00'	568.17	568.24
C	317+44.40	-12.00'	568.13	568.22
D	317+54.40	-12.00'	568.08	568.18
E	317+64.40	-12.00'	568.04	568.14
F	317+74.40	-12.00'	567.99	568.09
G	317+84.40	-12.00'	567.95	568.03
H	317+94.40	-12.00'	567.91	567.96
CL. W. BRG. PIER 1	318+07.69	-12.00'	567.85	567.87
CL. PIER 1	318+08.81	-12.00'	567.84	567.86
CL. E. BRG. PIER 1	318+09.94	-12.00'	567.84	567.86
I	318+19.94	-12.00'	567.79	567.87
J	318+29.94	-12.00'	567.75	567.88
K	318+39.94	-12.00'	567.70	567.88
L	318+49.94	-12.00'	567.66	567.87
M	318+59.94	-12.00'	567.61	567.85
N	318+69.94	-12.00'	567.57	567.81
O	318+79.94	-12.00'	567.53	567.76
P	318+89.94	-12.00'	567.48	567.69
Q	318+99.94	-12.00'	567.44	567.61
R	319+09.94	-12.00'	567.39	567.52
S	319+19.94	-12.00'	567.35	567.42
CL. W. BRG. PIER 2	319+29.77	-12.00'	567.30	567.32
CL. PIER 2	319+30.90	-12.00'	567.30	567.32
CL. E. BRG. PIER 2	319+32.02	-12.00'	567.29	567.31
T	319+42.02	-12.00'	567.25	567.30
U	319+52.02	-12.00'	567.20	567.27
V	319+62.02	-12.00'	567.16	567.25
W	319+72.02	-12.00'	567.12	567.21
X	319+82.02	-12.00'	567.07	567.17
Y	319+92.02	-12.00'	567.03	567.12
Z	320+02.02	-12.00'	566.98	567.06
AA	320+12.02	-12.00'	566.94	566.99
CL. BRG. E. ABUT.	320+25.31	-12.00'	566.88	566.90
BK. E. ABUT.	320+27.31	-12.00'	566.87	566.89

BEAM 12

Location	Station	Offset	Theoretical Grade Elevations	Theoretical Grade Elevations Adjusted For Dead Load Deflection and Grinding
BK. W. ABUT.	317+12.40	-13.25'	568.29	568.31
CL. BRG. W. ABUT.	317+14.40	-13.25'	568.28	568.30
A	317+24.40	-13.25'	568.24	568.28
B	317+34.40	-13.25'	568.19	568.26
C	317+44.40	-13.25'	568.15	568.23
D	317+54.40	-13.25'	568.10	568.20
E	317+64.40	-13.25'	568.06	568.16
F	317+74.40	-13.25'	568.01	568.11
G	317+84.40	-13.25'	567.97	568.05
H	317+94.40	-13.25'	567.92	567.98
CL. W. BRG. PIER 1	318+07.69	-13.25'	567.87	567.89
CL. PIER 1	318+08.81	-13.25'	567.86	567.88
CL. E. BRG. PIER 1	318+09.94	-13.25'	567.86	567.88
I	318+19.94	-13.25'	567.81	567.89
J	318+29.94	-13.25'	567.77	567.90
K	318+39.94	-13.25'	567.72	567.90
L	318+49.94	-13.25'	567.68	567.89
M	318+59.94	-13.25'	567.63	567.87
N	318+69.94	-13.25'	567.59	567.83
O	318+79.94	-13.25'	567.54	567.78
P	318+89.94	-13.25'	567.50	567.71
Q	318+99.94	-13.25'	567.45	567.63
R	319+09.94	-13.25'	567.41	567.54
S	319+19.94	-13.25'	567.37	567.44
CL. W. BRG. PIER 2	319+29.77	-13.25'	567.32	567.34
CL. PIER 2	319+30.90	-13.25'	567.32	567.34
CL. E. BRG. PIER 2	319+32.02	-13.25'	567.31	567.33
T	319+42.02	-13.25'	567.27	567.31
U	319+52.02	-13.25'	567.22	567.29
V	319+62.02	-13.25'	567.18	567.27
W	319+72.02	-13.25'	567.13	567.23
X	319+82.02	-13.25'	567.09	567.19
Y	319+92.02	-13.25'	567.04	567.14
Z	320+02.02	-13.25'	567.00	567.08
AA	320+12.02	-13.25'	566.96	567.01
CL. BRG. E. ABUT.	320+25.31	-13.25'	566.90	566.92
BK. E. ABUT.	320+27.31	-13.25'	566.89	566.91

BEAM 13

Location	Station	Offset	Theoretical Grade Elevations	Theoretical Grade Elevations Adjusted For Dead Load Deflection and Grinding
BK. W. ABUT.	317+12.40	-21.00'	568.41	568.43
CL. BRG. W. ABUT.	317+14.40	-21.00'	568.40	568.42
A	317+24.40	-21.00'	568.35	568.40
B	317+34.40	-21.00'	568.31	568.38
C	317+44.40	-21.00'	568.26	568.35
D	317+54.40	-21.00'	568.22	568.32
E	317+64.40	-21.00'	568.17	568.27
F	317+74.40	-21.00'	568.13	568.22
G	317+84.40	-21.00'	568.09	568.16
H	317+94.40	-21.00'	568.04	568.10
CL. W. BRG. PIER 1	318+07.69	-21.00'	567.98	568.00
CL. PIER 1	318+08.81	-21.00'	567.98	568.00
CL. E. BRG. PIER 1	318+09.94	-21.00'	567.97	567.99
I	318+19.94	-21.00'	567.93	568.01
J	318+29.94	-21.00'	567.88	568.01
K	318+39.94	-21.00'	567.84	568.01
L	318+49.94	-21.00'	567.79	568.00
M	318+59.94	-21.00'	567.75	567.98
N	318+69.94	-21.00'	567.70	567.94
O	318+79.94	-21.00'	567.66	567.89
P	318+89.94	-21.00'	567.62	567.83
Q	318+99.94	-21.00'	567.57	567.75
R	319+09.94	-21.00'	567.53	567.66
S	319+19.94	-21.00'	567.48	567.56
CL. W. BRG. PIER 2	319+29.77	-21.00'	567.44	567.46
CL. PIER 2	319+30.90	-21.00'	567.43	567.45
CL. E. BRG. PIER 2	319+32.02	-21.00'	567.43	567.45
T	319+42.02	-21.00'	567.38	567.43
U	319+52.02	-21.00'	567.34	567.41
V	319+62.02	-21.00'	567.29	567.38
W	319+72.02	-21.00'	567.25	567.35
X	319+82.02	-21.00'	567.21	567.30
Y	319+92.02	-21.00'	567.16	567.25
Z	320+02.02	-21.00'	567.12	567.19
AA	320+12.02	-21.00'	567.07	567.13
CL. BRG. E. ABUT.	320+25.31	-21.00'	567.01	567.03
BK. E. ABUT.	320+27.31	-21.00'	567.00	567.02

WB ROADWAY CROWN & STAGE CONST. LINE

Location	Station	Offset	Theoretical Grade Elevations	Theoretical Grade Elevations Adjusted For Dead Load Deflection and Grinding
BK. W. ABUT.	317+12.40	-24.00'	568.45	568.47
CL. BRG. W. ABUT.	317+14.40	-24.00'	568.44	568.46
A	317+24.40	-24.00'	568.40	568.44
B	317+34.40	-24.00'	568.35	568.42
C	317+44.40	-24.00'	568.31	568.40
D	317+54.40	-24.00'	568.26	568.36
E	317+64.40	-24.00'	568.22	568.32
F	317+74.40	-24.00'	568.17	568.27
G	317+84.40	-24.00'	568.13	568.21
H	317+94.40	-24.00'	568.09	568.14
CL. W. BRG. PIER 1	318+07.69	-24.00'	568.03	568.05
CL. PIER 1	318+08.81	-24.00'	568.02	568.04
CL. E. BRG. PIER 1	318+09.94	-24.00'	568.02	568.04
I	318+19.94	-24.00'	567.97	568.05
J	318+29.94	-24.00'	567.93	568.06
K	318+39.94	-24.00'	567.88	568.06
L	318+49.94	-24.00'	567.84	568.05
M	318+59.94	-24.00'	567.79	568.03
N	318+69.94	-24.00'	567.75	567.99
O	318+79.94	-24.00'	567.71	567.94
P	318+89.94	-24.00'	567.66	567.87
Q	318+99.94	-24.00'	567.62	567.79
R	319+09.94	-24.00'	567.57	567.70
S	319+19.94	-24.00'	567.53	567.60
CL. W. BRG. PIER 2	319+29.77	-24.00'	567.48	567.50
CL. PIER 2	319+30.90	-24.00'	567.48	567.50
CL. E. BRG. PIER 2	319+32.02	-24.00'	567.47	567.49
T	319+42.02	-24.00'	567.43	567.48
U	319+52.02	-24.00'	567.38	567.45
V	319+62.02	-24.00'	567.34	567.43
W	319+72.02	-24.00'	567.30	567.39
X	319+82.02	-24.00'	567.25	567.35
Y	319+92.02	-24.00'	567.21	567.30
Z	320+02.02	-24.00'	567.16	567.24
AA	320+12.02	-24.00'	567.12	567.17
CL. BRG. E. ABUT.	320+25.31	-24.00'	567.06	567.08
BK. E. ABUT.	320+27.31	-24.00'	567.05	567.07

BEAM 14

Location	Station	Offset	Theoretical Grade Elevations	Theoretical Grade Elevations Adjusted For Dead Load Deflection and Grinding
BK. W. ABUT.	317+12.40	-28.75'	568.38	568.40
CL. BRG. W. ABUT.	317+14.40	-28.75'	568.37	568.39
A	317+24.40	-28.75'	568.33	568.37
B	317+34.40	-28.75'	568.28	568.35
C	317+44.40	-28.75'	568.24	568.32
D	317+54.40	-28.75'	568.19	568.29
E	317+64.40	-28.75'	568.15	568.25
F	317+74.40	-28.75'	568.10	568.20
G	317+84.40	-28.75'	568.06	568.14
H	317+94.40	-28.75'	568.01	568.07
CL. W. BRG. PIER 1	318+07.69	-28.75'	567.96	567.98
CL. PIER 1	318+08.81	-28.75'	567.95	567.97
CL. E. BRG. PIER 1	318+09.94	-28.75'	567.95	567.97
I	318+19.94	-28.75'	567.90	567.98
J	318+29.94	-28.75'	567.86	567.99
K	318+39.94	-28.75'	567.81	567.99
L	318+49.94	-28.75'	567.77	567.98
M	318+59.94	-28.75'	567.72	567.96
N	318+69.94	-28.75'	567.68	567.92
O	318+79.94	-28.75'	567.63	567.87
P	318+89.94	-28.75'	567.59	567.80
Q	318+99.94	-28.75'	567.54	567.72
R	319+09.94	-28.75'	567.50	567.63
S	319+19.94	-28.75'	567.46	567.53
CL. W. BRG. PIER 2	319+29.77	-28.75'	567.41	567.43
CL. PIER 2	319+30.90	-28.75'	567.41	567.43
CL. E. BRG. PIER 2	319+32.02	-28.75'	567.40	567.42
T	319+42.02	-28.75'	567.36	567.40
U	319+52.02	-28.75'	567.31	567.38
V	319+62.02	-28.75'	567.27	567.36
W	319+72.02	-28.75'	567.22	567.32
X	319+82.02	-28.75'	567.18	567.28
Y	319+92.02	-28.75'	567.13	567.23
Z	320+02.02	-28.75'	567.09	567.17
AA	320+12.02	-28.75'	567.05	567.10
CL. BRG. E. ABUT.	320+25.31	-28.75'	566.99	567.01
BK. E. ABUT.	320+27.31	-28.75'	566.98	567.00

WB N. SLOPE CHANGE

Location	Station	Offset	Theoretical Grade Elevations	Theoretical Grade Elevations Adjusted For Dead Load Deflection and Grinding
BK. W. ABUT.	317+12.40	-36.00'	568.27	568.29
CL. BRG. W. ABUT.	317+14.40	-36.00'	568.26	568.28
A	317+24.40	-36.00'	568.22	568.26
B	317+34.40	-36.00'	568.17	568.24
C	317+44.40	-36.00'	568.13	568.22
D	317+54.40	-36.00'	568.08	568.18
E	317+64.40	-36.00'	568.04	568.14
F	317+74.40	-36.00'	567.99	568.09
G	317+84.40	-36.00'	567.95	568.03
H	317+94.40	-36.00'	567.91	567.96
CL. W. BRG. PIER 1	318+07.69	-36.00'	567.85	567.87
CL. PIER 1	318+08.81	-36.00'	567.84	567.86
CL. E. BRG. PIER 1	318+09.94	-36.00'	567.84	567.86
I	318+19.94	-36.00'	567.79	567.87
J	318+29.94	-36.00'	567.75	567.88
K	318+39.94	-36.00'	567.70	567.88
L	318+49.94	-36.00'	567.66	567.87
M	318+59.94	-36.00'	567.61	567.85
N	318+69.94	-36.00'	567.57	567.81
O	318+79.94	-36.00'	567.53	567.76
P	318+89.94	-36.00'	567.48	567.69
Q	318+99.94	-36.00'	567.44	567.61
R	319+09.94	-36.00'	567.39	567.52
S	319+19.94	-36.00'	567.35	567.42
CL. W. BRG. PIER 2	319+29.77	-36.00'	567.30	567.32
CL. PIER 2	319+30.90	-36.00'	567.30	567.32
CL. E. BRG. PIER 2	319+32.02	-36.00'	567.29	567.31
T	319+42.02	-36.00'	567.25	567.30
U	319+52.02	-36.00'	567.20	567.27
V	319+62.02	-36.00'	567.16	567.25
W	319+72.02	-36.00'	567.12	567.21
X	319+82.02	-36.00'	567.07	567.17
Y	319+92.02	-36.00'	567.03	567.12
Z	320+02.02	-36.00'	566.98	567.06
AA	320+12.02	-36.00'	566.94	566.99
CL. BRG. E. ABUT.	320+25.31	-36.00'	566.88	566.90
BK. E. ABUT.	320+27.31	-36.00'	566.87	566.89

BEAM 15

Location	Station	Offset	Theoretical Grade Elevations	Theoretical Grade Elevations Adjusted For Dead Load Deflection and Grinding
BK. W. ABUT.	317+12.40	-36.50'	568.26	568.28
CL. BRG. W. ABUT.	317+14.40	-36.50'	568.25	568.27
A	317+24.40	-36.50'	568.21	568.25
B	317+34.40	-36.50'	568.16	568.23
C	317+44.40	-36.50'	568.12	568.21
D	317+54.40	-36.50'	568.07	568.17
E	317+64.40	-36.50'	568.03	568.13
F	317+74.40	-36.50'	567.98	568.08
G	317+84.40	-36.50'	567.94	568.02
H	317+94.40	-36.50'	567.90	567.95
CL. W. BRG. PIER 1	318+07.69	-36.50'	567.84	567.86
CL. PIER 1	318+08.81	-36.50'	567.83	567.85
CL. E. BRG. PIER 1	318+09.94	-36.50'	567.83	567.85
I	318+19.94	-36.50'	567.78	567.86
J	318+29.94	-36.50'	567.74	567.87
K	318+39.94	-36.50'	567.69	567.87
L	318+49.94	-36.50'	567.65	567.86
M	318+59.94	-36.50'	567.60	567.84
N	318+69.94	-36.50'	567.56	567.80
O	318+79.94	-36.50'	567.52	567.75
P	318+89.94	-36.50'	567.47	567.68
Q	318+99.94	-36.50'	567.43	567.60
R	319+09.94	-36.50'	567.38	567.51
S	319+19.94	-36.50'	567.34	567.41
CL. W. BRG. PIER 2	319+29.77	-36.50'	567.29	567.31
CL. PIER 2	319+30.90	-36.50'	567.29	567.31
CL. E. BRG. PIER 2	319+32.02	-36.50'	567.28	567.30
T	319+42.02	-36.50'	567.24	567.29
U	319+52.02	-36.50'	567.19	567.26
V	319+62.02	-36.50'	567.15	567.24
W	319+72.02	-36.50'	567.11	567.20
X	319+82.02	-36.50'	567.06	567.16
Y	319+92.02	-36.50'	567.02	567.11
Z	320+02.02	-36.50'	566.97	567.05
AA	320+12.02	-36.50'	566.93	566.98
CL. BRG. E. ABUT.	320+25.31	-36.50'	566.87	566.89
BK. E. ABUT.	320+27.31	-36.50'	566.86	566.88

BEAM 16

Location	Station	Offset	Theoretical Grade Elevations	Theoretical Grade Elevations Adjusted For Dead Load Deflection and Grinding
BK. W. ABUT.	317+12.40	-44.25'	568.11	568.13
CL. BRG. W. ABUT.	317+14.40	-44.25'	568.10	568.12
A	317+24.40	-44.25'	568.05	568.10
B	317+34.40	-44.25'	568.01	568.08
C	317+44.40	-44.25'	567.96	568.05
D	317+54.40	-44.25'	567.92	568.02
E	317+64.40	-44.25'	567.87	567.97
F	317+74.40	-44.25'	567.83	567.92
G	317+84.40	-44.25'	567.79	567.86
H	317+94.40	-44.25'	567.74	567.80
CL. W. BRG. PIER 1	318+07.69	-44.25'	567.68	567.70
CL. PIER 1	318+08.81	-44.25'	567.68	567.70
CL. E. BRG. PIER 1	318+09.94	-44.25'	567.67	567.69
I	318+19.94	-44.25'	567.63	567.71
J	318+29.94	-44.25'	567.58	567.71
K	318+39.94	-44.25'	567.54	567.71
L	318+49.94	-44.25'	567.49	567.70
M	318+59.94	-44.25'	567.45	567.68
N	318+69.94	-44.25'	567.40	567.64
O	318+79.94	-44.25'	567.36	567.59
P	318+89.94	-44.25'	567.32	567.53
Q	318+99.94	-44.25'	567.27	567.45
R	319+09.94	-44.25'	567.23	567.36
S	319+19.94	-44.25'	567.18	567.26
CL. W. BRG. PIER 2	319+29.77	-44.25'	567.14	567.16
CL. PIER 2	319+30.90	-44.25'	567.13	567.15
CL. E. BRG. PIER 2	319+32.02	-44.25'	567.13	567.15
T	319+42.02	-44.25'	567.08	567.13
U	319+52.02	-44.25'	567.04	567.11
V	319+62.02	-44.25'	566.99	567.08
W	319+72.02	-44.25'	566.95	567.05
X	319+82.02	-44.25'	566.91	567.00
Y	319+92.02	-44.25'	566.86	566.95
Z	320+02.02	-44.25'	566.82	566.89
AA	320+12.02	-44.25'	566.77	566.83
CL. BRG. E. ABUT.	320+25.31	-44.25'	566.71	566.73
BK. E. ABUT.	320+27.31	-44.25'	566.70	566.72

N. EDGE WB AUX. LANE

Location	Station	Offset	Theoretical Grade Elevations	Theoretical Grade Elevations Adjusted For Dead Load Deflection and Grinding
BK. W. ABUT.	317+12.40	-48.00'	568.03	568.05
CL. BRG. W. ABUT.	317+14.40	-48.00'	568.02	568.04
A	317+24.40	-48.00'	567.98	568.02
B	317+34.40	-48.00'	567.93	568.00
C	317+44.40	-48.00'	567.89	567.98
D	317+54.40	-48.00'	567.84	567.94
E	317+64.40	-48.00'	567.80	567.90
F	317+74.40	-48.00'	567.75	567.85
G	317+84.40	-48.00'	567.71	567.79
H	317+94.40	-48.00'	567.67	567.72
CL. W. BRG. PIER 1	318+07.69	-48.00'	567.61	567.63
CL. PIER 1	318+08.81	-48.00'	567.60	567.62
CL. E. BRG. PIER 1	318+09.94	-48.00'	567.60	567.62
I	318+19.94	-48.00'	567.55	567.63
J	318+29.94	-48.00'	567.51	567.64
K	318+39.94	-48.00'	567.46	567.64
L	318+49.94	-48.00'	567.42	567.63
M	318+59.94	-48.00'	567.37	567.61
N	318+69.94	-48.00'	567.33	567.57
O	318+79.94	-48.00'	567.29	567.52
P	318+89.94	-48.00'	567.24	567.45
Q	318+99.94	-48.00'	567.20	567.37
R	319+09.94	-48.00'	567.15	567.28
S	319+19.94	-48.00'	567.11	567.18
CL. W. BRG. PIER 2	319+29.77	-48.00'	567.06	567.08
CL. PIER 2	319+30.90	-48.00'	567.06	567.08
CL. E. BRG. PIER 2	319+32.02	-48.00'	567.05	567.07
T	319+42.02	-48.00'	567.01	567.06
U	319+52.02	-48.00'	566.96	567.03
V	319+62.02	-48.00'	566.92	567.01
W	319+72.02	-48.00'	566.88	566.97
X	319+82.02	-48.00'	566.83	566.93
Y	319+92.02	-48.00'	566.79	566.88
Z	320+02.02	-48.00'	566.74	566.82
AA	320+12.02	-48.00'	566.70	566.75
CL. BRG. E. ABUT.	320+25.31	-48.00'	566.64	566.66
BK. E. ABUT.	320+27.31	-48.00'	566.63	566.65

BEAM 17

Location	Station	Offset	Theoretical Grade Elevations	Theoretical Grade Elevations Adjusted For Dead Load Deflection and Grinding
BK. W. ABUT.	317+12.40	-52.00'	567.95	567.97
CL. BRG. W. ABUT.	317+14.40	-52.00'	567.94	567.96
A	317+24.40	-52.00'	567.90	567.94
B	317+34.40	-52.00'	567.85	567.92
C	317+44.40	-52.00'	567.81	567.90
D	317+54.40	-52.00'	567.76	567.86
E	317+64.40	-52.00'	567.72	567.82
F	317+74.40	-52.00'	567.67	567.77
G	317+84.40	-52.00'	567.63	567.71
H	317+94.40	-52.00'	567.59	567.64
CL. W. BRG. PIER 1	318+07.69	-52.00'	567.53	567.55
CL. PIER 1	318+08.81	-52.00'	567.52	567.54
CL. E. BRG. PIER 1	318+09.94	-52.00'	567.52	567.54
I	318+19.94	-52.00'	567.47	567.55
J	318+29.94	-52.00'	567.43	567.56
K	318+39.94	-52.00'	567.38	567.56
L	318+49.94	-52.00'	567.34	567.55
M	318+59.94	-52.00'	567.29	567.53
N	318+69.94	-52.00'	567.25	567.49
O	318+79.94	-52.00'	567.21	567.44
P	318+89.94	-52.00'	567.16	567.37
Q	318+99.94	-52.00'	567.12	567.29
R	319+09.94	-52.00'	567.07	567.20
S	319+19.94	-52.00'	567.03	567.10
CL. W. BRG. PIER 2	319+29.77	-52.00'	566.98	567.00
CL. PIER 2	319+30.90	-52.00'	566.98	567.00
CL. E. BRG. PIER 2	319+32.02	-52.00'	566.97	566.99
T	319+42.02	-52.00'	566.93	566.98
U	319+52.02	-52.00'	566.88	566.95
V	319+62.02	-52.00'	566.84	566.93
W	319+72.02	-52.00'	566.80	566.89
X	319+82.02	-52.00'	566.75	566.85
Y	319+92.02	-52.00'	566.71	566.80
Z	320+02.02	-52.00'	566.66	566.74
AA	320+12.02	-52.00'	566.62	566.67
CL. BRG. E. ABUT.	320+25.31	-52.00'	566.56	566.58
BK. E. ABUT.	320+27.31	-52.00'	566.55	566.57

FACE OF WB N. PARAPET

Location	Station	Offset	Theoretical Grade Elevations	Theoretical Grade Elevations Adjusted For Dead Load Deflection and Grinding
BK. W. ABUT.	317+12.40	-54.00'	567.91	567.93
CL. BRG. W. ABUT.	317+14.40	-54.00'	567.90	567.92
A	317+24.40	-54.00'	567.86	567.90
B	317+34.40	-54.00'	567.81	567.88
C	317+44.40	-54.00'	567.77	567.86
D	317+54.40	-54.00'	567.72	567.82
E	317+64.40	-54.00'	567.68	567.78
F	317+74.40	-54.00'	567.63	567.73
G	317+84.40	-54.00'	567.59	567.67
H	317+94.40	-54.00'	567.55	567.60
CL. W. BRG. PIER 1	318+07.69	-54.00'	567.49	567.51
CL. PIER 1	318+08.81	-54.00'	567.48	567.50
CL. E. BRG. PIER 1	318+09.94	-54.00'	567.48	567.50
I	318+19.94	-54.00'	567.43	567.51
J	318+29.94	-54.00'	567.39	567.52
K	318+39.94	-54.00'	567.34	567.52
L	318+49.94	-54.00'	567.30	567.51
M	318+59.94	-54.00'	567.25	567.49
N	318+69.94	-54.00'	567.21	567.45
O	318+79.94	-54.00'	567.17	567.40
P	318+89.94	-54.00'	567.12	567.33
Q	318+99.94	-54.00'	567.08	567.25
R	319+09.94	-54.00'	567.03	567.16
S	319+19.94	-54.00'	566.99	567.06
CL. W. BRG. PIER 2	319+29.77	-54.00'	566.94	566.96
CL. PIER 2	319+30.90	-54.00'	566.94	566.96
CL. E. BRG. PIER 2	319+32.02	-54.00'	566.93	566.95
T	319+42.02	-54.00'	566.89	566.94
U	319+52.02	-54.00'	566.84	566.91
V	319+62.02	-54.00'	566.80	566.89
W	319+72.02	-54.00'	566.76	566.85
X	319+82.02	-54.00'	566.71	566.81
Y	319+92.02	-54.00'	566.67	566.76
Z	320+02.02	-54.00'	566.62	566.70
AA	320+12.02	-54.00'	566.58	566.63
CL. BRG. E. ABUT.	320+25.31	-54.00'	566.52	566.54
BK. E. ABUT.	320+27.31	-54.00'	566.51	566.53

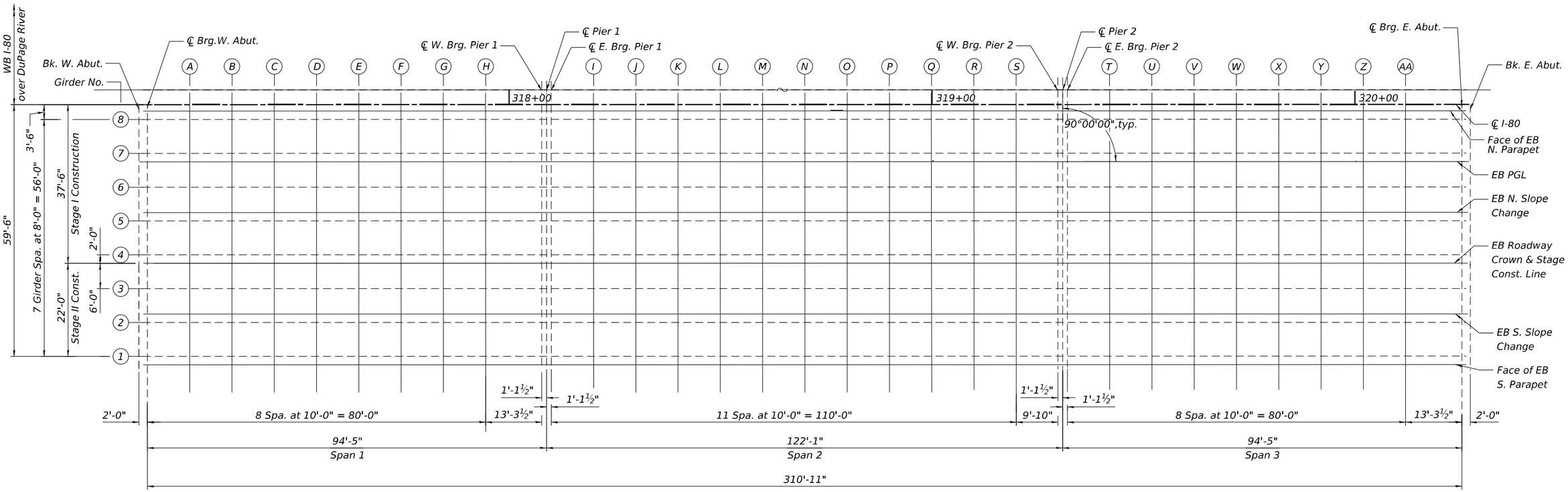

PLAN

N

Girder #	DEAD LOAD DEFLECTIONS								
	Span 1			Span 2			Span 3		
	A1	B1	C1	A2	B2	C2	A3	B3	C3
1-8	5/8"	1"	5/8"	1 7/8"	2 5/8"	1 7/8"	5/8"	1"	5/8"

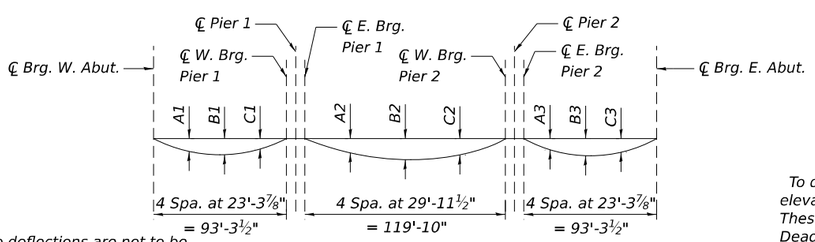

DEAD LOAD DEFLECTION

(Includes weight of concrete only excluding beams)

Note:
The above deflections are not to be used in the field if the engineer is working from the grade elevations adjusted for dead load deflections and grinding as shown on Sheets SA-26 thru SA-30.

FILLET HEIGHTS

To determine "t": After all precast prestressed beams have been erected, elevations of the top flanges of the beams shall be taken at intervals shown above. These elevations subtracted from the "Theoretical Grade Elevations Adjusted for Dead Load Deflection and Grinding" shown on Sheets SA-26 thru SA-30, minus the initial slab thickness prior to grinding, equals the fillet heights "t" above top flange of beams.

The slab is to be ground after curing to achieve smoothness, but the slab is not to be ground to elevations below the "Theoretical Grade Elevations" shown on Sheets SA-26 thru SA-30. For grinding the deck, see Special Provisions.

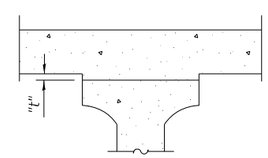

INTERIOR BEAMS

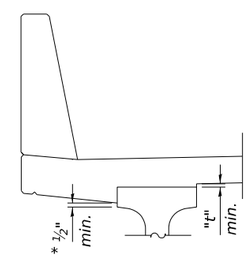

At Minimum Fillet

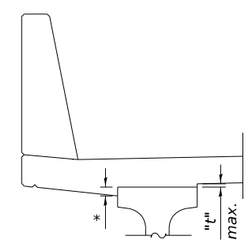

At Maximum Fillet

* Variable (not less than ½")

EXTERIOR BEAMS

MODEL: Default
FILE NAME: pw://transystems-pw.bentley.com:transyscorp-pw1-hosted/Documents/Projects_2018/CH401/401180022/01-Stantec/CAD/ML-04_62R28/04-Sheets/04-Structures/0998312_0998313-ML-04-025-EB Top of Slab Elevation Layout.dgn

HBM ENGINEERING GROUP, LLC

USER NAME =	DESIGNED - LAB	REVISED -
	CHECKED - MI, PG	REVISED -
PLOT SCALE =	DRAWN - LAB	REVISED -
PLOT DATE =	CHECKED - MI, PG	REVISED -

STATE OF ILLINOIS
DEPARTMENT OF TRANSPORTATION

EB TOP OF SLAB ELEVATION LAYOUT
STRUCTURE NOS. 099-8312 (EB) & 099-8313 (WB)

SHEET SA-25 OF SA-98 SHEETS

F.A.I. RTE.	SECTION	COUNTY	TOTAL SHEETS	SHEET NO.
I-80	FAI 80 21 STRUCTURE 7	WILL	1059	558
		CONTRACT NO. 62R28		
	ILLINOIS	FED. AID PROJECT		

9/5/2023 6:08:07 PM

FACE OF EB S. PARAPET

Location	Station	Offset	Theoretical Grade Elevations	Theoretical Grade Elevations Adjusted For Dead Load Deflection and Grinding
BK. W. ABUT.	317+12.40	48.00'	568.03	568.05
CL. BRG. W. ABUT.	317+14.40	48.00'	568.02	568.04
A	317+24.40	48.00'	567.98	568.02
B	317+34.40	48.00'	567.93	568.00
C	317+44.40	48.00'	567.89	567.98
D	317+54.40	48.00'	567.84	567.94
E	317+64.40	48.00'	567.80	567.90
F	317+74.40	48.00'	567.75	567.85
G	317+84.40	48.00'	567.71	567.79
H	317+94.40	48.00'	567.67	567.72
CL. W. BRG. PIER 1	318+07.69	48.00'	567.61	567.63
CL. PIER 1	318+08.81	48.00'	567.60	567.62
CL. E. BRG. PIER 1	318+09.94	48.00'	567.60	567.62
I	318+19.94	48.00'	567.55	567.63
J	318+29.94	48.00'	567.51	567.64
K	318+39.94	48.00'	567.46	567.64
L	318+49.94	48.00'	567.42	567.63
M	318+59.94	48.00'	567.37	567.61
N	318+69.94	48.00'	567.33	567.57
O	318+79.94	48.00'	567.29	567.52
P	318+89.94	48.00'	567.24	567.45
Q	318+99.94	48.00'	567.20	567.37
R	319+09.94	48.00'	567.15	567.28
S	319+19.94	48.00'	567.11	567.18
CL. W. BRG. PIER 2	319+29.77	48.00'	567.06	567.08
CL. PIER 2	319+30.90	48.00'	567.06	567.08
CL. E. BRG. PIER 2	319+32.02	48.00'	567.05	567.07
T	319+42.02	48.00'	567.01	567.06
U	319+52.02	48.00'	566.96	567.03
V	319+62.02	48.00'	566.92	567.01
W	319+72.02	48.00'	566.88	566.97
X	319+82.02	48.00'	566.83	566.93
Y	319+92.02	48.00'	566.79	566.88
Z	320+02.02	48.00'	566.74	566.82
AA	320+12.02	48.00'	566.70	566.75
CL. BRG. E. ABUT.	320+25.31	48.00'	566.64	566.66
BK. E. ABUT.	320+27.31	48.00'	566.63	566.65

BEAM 1

Location	Station	Offset	Theoretical Grade Elevations	Theoretical Grade Elevations Adjusted For Dead Load Deflection and Grinding
BK. W. ABUT.	317+12.40	46.00'	568.07	568.09
CL. BRG. W. ABUT.	317+14.40	46.00'	568.06	568.08
A	317+24.40	46.00'	568.02	568.06
B	317+34.40	46.00'	567.97	568.04
C	317+44.40	46.00'	567.93	568.02
D	317+54.40	46.00'	567.88	567.98
E	317+64.40	46.00'	567.84	567.94
F	317+74.40	46.00'	567.79	567.89
G	317+84.40	46.00'	567.75	567.83
H	317+94.40	46.00'	567.71	567.76
CL. W. BRG. PIER 1	318+07.69	46.00'	567.65	567.67
CL. PIER 1	318+08.81	46.00'	567.64	567.66
CL. E. BRG. PIER 1	318+09.94	46.00'	567.64	567.66
I	318+19.94	46.00'	567.59	567.67
J	318+29.94	46.00'	567.55	567.68
K	318+39.94	46.00'	567.50	567.68
L	318+49.94	46.00'	567.46	567.67
M	318+59.94	46.00'	567.41	567.65
N	318+69.94	46.00'	567.37	567.61
O	318+79.94	46.00'	567.33	567.56
P	318+89.94	46.00'	567.28	567.49
Q	318+99.94	46.00'	567.24	567.41
R	319+09.94	46.00'	567.19	567.32
S	319+19.94	46.00'	567.15	567.22
CL. W. BRG. PIER 2	319+29.77	46.00'	567.10	567.12
CL. PIER 2	319+30.90	46.00'	567.10	567.12
CL. E. BRG. PIER 2	319+32.02	46.00'	567.09	567.11
T	319+42.02	46.00'	567.05	567.10
U	319+52.02	46.00'	567.00	567.07
V	319+62.02	46.00'	566.96	567.05
W	319+72.02	46.00'	566.92	567.01
X	319+82.02	46.00'	566.87	566.97
Y	319+92.02	46.00'	566.83	566.92
Z	320+02.02	46.00'	566.78	566.86
AA	320+12.02	46.00'	566.74	566.79
CL. BRG. E. ABUT.	320+25.31	46.00'	566.68	566.70
BK. E. ABUT.	320+27.31	46.00'	566.67	566.69

BEAM 2

Location	Station	Offset	Theoretical Grade Elevations	Theoretical Grade Elevations Adjusted For Dead Load Deflection and Grinding
BK. W. ABUT.	317+12.40	38.00'	568.23	568.25
CL. BRG. W. ABUT.	317+14.40	38.00'	568.22	568.24
A	317+24.40	38.00'	568.18	568.22
B	317+34.40	38.00'	568.13	568.20
C	317+44.40	38.00'	568.09	568.18
D	317+54.40	38.00'	568.04	568.14
E	317+64.40	38.00'	568.00	568.10
F	317+74.40	38.00'	567.95	568.05
G	317+84.40	38.00'	567.91	567.99
H	317+94.40	38.00'	567.87	567.92
CL. W. BRG. PIER 1	318+07.69	38.00'	567.81	567.83
CL. PIER 1	318+08.81	38.00'	567.80	567.82
CL. E. BRG. PIER 1	318+09.94	38.00'	567.80	567.82
I	318+19.94	38.00'	567.75	567.83
J	318+29.94	38.00'	567.71	567.84
K	318+39.94	38.00'	567.66	567.84
L	318+49.94	38.00'	567.62	567.83
M	318+59.94	38.00'	567.57	567.81
N	318+69.94	38.00'	567.53	567.77
O	318+79.94	38.00'	567.49	567.72
P	318+89.94	38.00'	567.44	567.65
Q	318+99.94	38.00'	567.40	567.57
R	319+09.94	38.00'	567.35	567.48
S	319+19.94	38.00'	567.31	567.38
CL. W. BRG. PIER 2	319+29.77	38.00'	567.26	567.28
CL. PIER 2	319+30.90	38.00'	567.26	567.28
CL. E. BRG. PIER 2	319+32.02	38.00'	567.25	567.27
T	319+42.02	38.00'	567.21	567.26
U	319+52.02	38.00'	567.16	567.23
V	319+62.02	38.00'	567.12	567.21
W	319+72.02	38.00'	567.08	567.17
X	319+82.02	38.00'	567.03	567.13
Y	319+92.02	38.00'	566.99	567.08
Z	320+02.02	38.00'	566.94	567.02
AA	320+12.02	38.00'	566.90	566.95
CL. BRG. E. ABUT.	320+25.31	38.00'	566.84	566.86
BK. E. ABUT.	320+27.31	38.00'	566.83	566.85

EB S. SLOPE CHANGE

Location	Station	Offset	Theoretical Grade Elevations	Theoretical Grade Elevations Adjusted For Dead Load Deflection and Grinding
BK. W. ABUT.	317+12.40	36.00'	568.27	568.29
CL. BRG. W. ABUT.	317+14.40	36.00'	568.26	568.28
A	317+24.40	36.00'	568.22	568.26
B	317+34.40	36.00'	568.17	568.24
C	317+44.40	36.00'	568.13	568.22
D	317+54.40	36.00'	568.08	568.18
E	317+64.40	36.00'	568.04	568.14
F	317+74.40	36.00'	567.99	568.09
G	317+84.40	36.00'	567.95	568.03
H	317+94.40	36.00'	567.91	567.96
CL. W. BRG. PIER 1	318+07.69	36.00'	567.85	567.87
CL. PIER 1	318+08.81	36.00'	567.84	567.86
CL. E. BRG. PIER 1	318+09.94	36.00'	567.84	567.86
I	318+19.94	36.00'	567.79	567.87
J	318+29.94	36.00'	567.75	567.88
K	318+39.94	36.00'	567.70	567.88
L	318+49.94	36.00'	567.66	567.87
M	318+59.94	36.00'	567.61	567.85
N	318+69.94	36.00'	567.57	567.81
O	318+79.94	36.00'	567.53	567.76
P	318+89.94	36.00'	567.48	567.69
Q	318+99.94	36.00'	567.44	567.61
R	319+09.94	36.00'	567.39	567.52
S	319+19.94	36.00'	567.35	567.42
CL. W. BRG. PIER 2	319+29.77	36.00'	567.30	567.32
CL. PIER 2	319+30.90	36.00'	567.30	567.32
CL. E. BRG. PIER 2	319+32.02	36.00'	567.29	567.31
T	319+42.02	36.00'	567.25	567.30
U	319+52.02	36.00'	567.20	567.27
V	319+62.02	36.00'	567.16	567.25
W	319+72.02	36.00'	567.12	567.21
X	319+82.02	36.00'	567.07	567.17
Y	319+92.02	36.00'	567.03	567.12
Z	320+02.02	36.00'	566.98	567.06
AA	320+12.02	36.00'	566.94	566.99
CL. BRG. E. ABUT.	320+25.31	36.00'	566.88	566.90
BK. E. ABUT.	320+27.31	36.00'	566.87	566.89

BEAM 3

Location	Station	Offset	Theoretical Grade Elevations	Theoretical Grade Elevations Adjusted For Dead Load Deflection and Grinding
BK. W. ABUT.	317+12.40	30.00'	568.36	568.38
CL. BRG. W. ABUT.	317+14.40	30.00'	568.35	568.37
A	317+24.40	30.00'	568.31	568.35
B	317+34.40	30.00'	568.26	568.33
C	317+44.40	30.00'	568.22	568.31
D	317+54.40	30.00'	568.17	568.27
E	317+64.40	30.00'	568.13	568.23
F	317+74.40	30.00'	568.08	568.18
G	317+84.40	30.00'	568.04	568.12
H	317+94.40	30.00'	568.00	568.05
CL. W. BRG. PIER 1	318+07.69	30.00'	567.94	567.96
CL. PIER 1	318+08.81	30.00'	567.93	567.95
CL. E. BRG. PIER 1	318+09.94	30.00'	567.93	567.95
I	318+19.94	30.00'	567.88	567.96
J	318+29.94	30.00'	567.84	567.97
K	318+39.94	30.00'	567.79	567.97
L	318+49.94	30.00'	567.75	567.96
M	318+59.94	30.00'	567.70	567.94
N	318+69.94	30.00'	567.66	567.90
O	318+79.94	30.00'	567.62	567.85
P	318+89.94	30.00'	567.57	567.78
Q	318+99.94	30.00'	567.53	567.70
R	319+09.94	30.00'	567.48	567.61
S	319+19.94	30.00'	567.44	567.51
CL. W. BRG. PIER 2	319+29.77	30.00'	567.39	567.41
CL. PIER 2	319+30.90	30.00'	567.39	567.41
CL. E. BRG. PIER 2	319+32.02	30.00'	567.38	567.40
T	319+42.02	30.00'	567.34	567.39
U	319+52.02	30.00'	567.29	567.36
V	319+62.02	30.00'	567.25	567.34
W	319+72.02	30.00'	567.21	567.30
X	319+82.02	30.00'	567.16	567.26
Y	319+92.02	30.00'	567.12	567.21
Z	320+02.02	30.00'	567.07	567.15
AA	320+12.02	30.00'	567.03	567.08
CL. BRG. E. ABUT.	320+25.31	30.00'	566.97	566.99
BK. E. ABUT.	320+27.31	30.00'	566.96	566.98

EB ROADWAY CROWN & STAGE CONST. LINE

Location	Station	Offset	Theoretical Grade Elevations	Theoretical Grade Elevations Adjusted For Dead Load Deflection and Grinding
BK. W. ABUT.	317+12.40	24.00'	568.45	568.47
CL. BRG. W. ABUT.	317+14.40	24.00'	568.44	568.46
A	317+24.40	24.00'	568.40	568.44
B	317+34.40	24.00'	568.35	568.42
C	317+44.40	24.00'	568.31	568.40
D	317+54.40	24.00'	568.26	568.36
E	317+64.40	24.00'	568.22	568.32
F	317+74.40	24.00'	568.17	568.27
G	317+84.40	24.00'	568.13	568.21
H	317+94.40	24.00'	568.09	568.14
CL. W. BRG. PIER 1	318+07.69	24.00'	568.03	568.05
CL. PIER 1	318+08.81	24.00'	568.02	568.04
CL. E. BRG. PIER 1	318+09.94	24.00'	568.02	568.04
I	318+19.94	24.00'	567.97	568.05
J	318+29.94	24.00'	567.93	568.06
K	318+39.94	24.00'	567.88	568.06
L	318+49.94	24.00'	567.84	568.05
M	318+59.94	24.00'	567.79	568.03
N	318+69.94	24.00'	567.75	567.99
O	318+79.94	24.00'	567.71	567.94
P	318+89.94	24.00'	567.66	567.87
Q	318+99.94	24.00'	567.62	567.79
R	319+09.94	24.00'	567.57	567.70
S	319+19.94	24.00'	567.53	567.60
CL. W. BRG. PIER 2	319+29.77	24.00'	567.48	567.50
CL. PIER 2	319+30.90	24.00'	567.48	567.50
CL. E. BRG. PIER 2	319+32.02	24.00'	567.47	567.49
T	319+42.02	24.00'	567.43	567.48
U	319+52.02	24.00'	567.38	567.45
V	319+62.02	24.00'	567.34	567.43
W	319+72.02	24.00'	567.30	567.39
X	319+82.02	24.00'	567.25	567.35
Y	319+92.02	24.00'	567.21	567.30
Z	320+02.02	24.00'	567.16	567.24
AA	320+12.02	24.00'	567.12	567.17
CL. BRG. E. ABUT.	320+25.31	24.00'	567.06	567.08
BK. E. ABUT.	320+27.31	24.00'	567.05	567.07

BEAM 4

Location	Station	Offset	Theoretical Grade Elevations	Theoretical Grade Elevations Adjusted For Dead Load Deflection and Grinding
BK. W. ABUT.	317+12.40	22.00'	568.42	568.44
CL. BRG. W. ABUT.	317+14.40	22.00'	568.41	568.43
A	317+24.40	22.00'	568.37	568.41
B	317+34.40	22.00'	568.32	568.39
C	317+44.40	22.00'	568.28	568.37
D	317+54.40	22.00'	568.23	568.33
E	317+64.40	22.00'	568.19	568.29
F	317+74.40	22.00'	568.14	568.24
G	317+84.40	22.00'	568.10	568.18
H	317+94.40	22.00'	568.06	568.11
CL. W. BRG. PIER 1	318+07.69	22.00'	568.00	568.02
CL. PIER 1	318+08.81	22.00'	567.99	568.01
CL. E. BRG. PIER 1	318+09.94	22.00'	567.99	568.01
I	318+19.94	22.00'	567.94	568.02
J	318+29.94	22.00'	567.90	568.03
K	318+39.94	22.00'	567.85	568.03
L	318+49.94	22.00'	567.81	568.02
M	318+59.94	22.00'	567.76	568.00
N	318+69.94	22.00'	567.72	567.96
O	318+79.94	22.00'	567.68	567.91
P	318+89.94	22.00'	567.63	567.84
Q	318+99.94	22.00'	567.59	567.76
R	319+09.94	22.00'	567.54	567.67
S	319+19.94	22.00'	567.50	567.57
CL. W. BRG. PIER 2	319+29.77	22.00'	567.45	567.47
CL. PIER 2	319+30.90	22.00'	567.45	567.47
CL. E. BRG. PIER 2	319+32.02	22.00'	567.44	567.46
T	319+42.02	22.00'	567.40	567.45
U	319+52.02	22.00'	567.35	567.42
V	319+62.02	22.00'	567.31	567.40
W	319+72.02	22.00'	567.27	567.36
X	319+82.02	22.00'	567.22	567.32
Y	319+92.02	22.00'	567.18	567.27
Z	320+02.02	22.00'	567.13	567.21
AA	320+12.02	22.00'	567.09	567.14
CL. BRG. E. ABUT.	320+25.31	22.00'	567.03	567.05
BK. E. ABUT.	320+27.31	22.00'	567.02	567.04

BEAM 5

Location	Station	Offset	Theoretical Grade Elevations	Theoretical Grade Elevations Adjusted For Dead Load Deflection and Grinding
BK. W. ABUT.	317+12.40	14.00'	568.30	568.32
CL. BRG. W. ABUT.	317+14.40	14.00'	568.29	568.31
A	317+24.40	14.00'	568.25	568.29
B	317+34.40	14.00'	568.20	568.27
C	317+44.40	14.00'	568.16	568.25
D	317+54.40	14.00'	568.11	568.21
E	317+64.40	14.00'	568.07	568.17
F	317+74.40	14.00'	568.02	568.12
G	317+84.40	14.00'	567.98	568.06
H	317+94.40	14.00'	567.94	567.99
CL. W. BRG. PIER 1	318+07.69	14.00'	567.88	567.90
CL. PIER 1	318+08.81	14.00'	567.87	567.89
CL. E. BRG. PIER 1	318+09.94	14.00'	567.87	567.89
I	318+19.94	14.00'	567.82	567.90
J	318+29.94	14.00'	567.78	567.91
K	318+39.94	14.00'	567.73	567.91
L	318+49.94	14.00'	567.69	567.90
M	318+59.94	14.00'	567.64	567.88
N	318+69.94	14.00'	567.60	567.84
O	318+79.94	14.00'	567.56	567.79
P	318+89.94	14.00'	567.51	567.72
Q	318+99.94	14.00'	567.47	567.64
R	319+09.94	14.00'	567.42	567.55
S	319+19.94	14.00'	567.38	567.45
CL. W. BRG. PIER 2	319+29.77	14.00'	567.33	567.35
CL. PIER 2	319+30.90	14.00'	567.33	567.35
CL. E. BRG. PIER 2	319+32.02	14.00'	567.32	567.34
T	319+42.02	14.00'	567.28	567.33
U	319+52.02	14.00'	567.23	567.30
V	319+62.02	14.00'	567.19	567.28
W	319+72.02	14.00'	567.15	567.24
X	319+82.02	14.00'	567.10	567.20
Y	319+92.02	14.00'	567.06	567.15
Z	320+02.02	14.00'	567.01	567.09
AA	320+12.02	14.00'	566.97	567.02
CL. BRG. E. ABUT.	320+25.31	14.00'	566.91	566.93
BK. E. ABUT.	320+27.31	14.00'	566.90	566.92

EB N. SLOPE CHANGE

Location	Station	Offset	Theoretical Grade Elevations	Theoretical Grade Elevations Adjusted For Dead Load Deflection and Grinding
BK. W. ABUT.	317+12.40	12.00'	568.27	568.29
CL. BRG. W. ABUT.	317+14.40	12.00'	568.26	568.28
A	317+24.40	12.00'	568.22	568.26
B	317+34.40	12.00'	568.17	568.24
C	317+44.40	12.00'	568.13	568.22
D	317+54.40	12.00'	568.08	568.18
E	317+64.40	12.00'	568.04	568.14
F	317+74.40	12.00'	567.99	568.09
G	317+84.40	12.00'	567.95	568.03
H	317+94.40	12.00'	567.91	567.96
CL. W. BRG. PIER 1	318+07.69	12.00'	567.85	567.87
CL. PIER 1	318+08.81	12.00'	567.84	567.86
CL. E. BRG. PIER 1	318+09.94	12.00'	567.84	567.86
I	318+19.94	12.00'	567.79	567.87
J	318+29.94	12.00'	567.75	567.88
K	318+39.94	12.00'	567.70	567.88
L	318+49.94	12.00'	567.66	567.87
M	318+59.94	12.00'	567.61	567.85
N	318+69.94	12.00'	567.57	567.81
O	318+79.94	12.00'	567.53	567.76
P	318+89.94	12.00'	567.48	567.69
Q	318+99.94	12.00'	567.44	567.61
R	319+09.94	12.00'	567.39	567.52
S	319+19.94	12.00'	567.35	567.42
CL. W. BRG. PIER 2	319+29.77	12.00'	567.30	567.32
CL. PIER 2	319+30.90	12.00'	567.30	567.32
CL. E. BRG. PIER 2	319+32.02	12.00'	567.29	567.31
T	319+42.02	12.00'	567.25	567.30
U	319+52.02	12.00'	567.20	567.27
V	319+62.02	12.00'	567.16	567.25
W	319+72.02	12.00'	567.12	567.21
X	319+82.02	12.00'	567.07	567.17
Y	319+92.02	12.00'	567.03	567.12
Z	320+02.02	12.00'	566.98	567.06
AA	320+12.02	12.00'	566.94	566.99
CL. BRG. E. ABUT.	320+25.31	12.00'	566.88	566.90
BK. E. ABUT.	320+27.31	12.00'	566.87	566.89

BEAM 6

Location	Station	Offset	Theoretical Grade Elevations	Theoretical Grade Elevations Adjusted For Dead Load Deflection and Grinding
BK. W. ABUT.	317+12.40	6.00'	568.15	568.17
CL. BRG. W. ABUT.	317+14.40	6.00'	568.14	568.16
A	317+24.40	6.00'	568.10	568.14
B	317+34.40	6.00'	568.05	568.12
C	317+44.40	6.00'	568.01	568.10
D	317+54.40	6.00'	567.96	568.06
E	317+64.40	6.00'	567.92	568.02
F	317+74.40	6.00'	567.87	567.97
G	317+84.40	6.00'	567.83	567.91
H	317+94.40	6.00'	567.79	567.84
CL. W. BRG. PIER 1	318+07.69	6.00'	567.73	567.75
CL. PIER 1	318+08.81	6.00'	567.72	567.74
CL. E. BRG. PIER 1	318+09.94	6.00'	567.72	567.74
I	318+19.94	6.00'	567.67	567.75
J	318+29.94	6.00'	567.63	567.76
K	318+39.94	6.00'	567.58	567.76
L	318+49.94	6.00'	567.54	567.75
M	318+59.94	6.00'	567.49	567.73
N	318+69.94	6.00'	567.45	567.69
O	318+79.94	6.00'	567.41	567.64
P	318+89.94	6.00'	567.36	567.57
Q	318+99.94	6.00'	567.32	567.49
R	319+09.94	6.00'	567.27	567.40
S	319+19.94	6.00'	567.23	567.30
CL. W. BRG. PIER 2	319+29.77	6.00'	567.18	567.20
CL. PIER 2	319+30.90	6.00'	567.18	567.20
CL. E. BRG. PIER 2	319+32.02	6.00'	567.17	567.19
T	319+42.02	6.00'	567.13	567.18
U	319+52.02	6.00'	567.08	567.15
V	319+62.02	6.00'	567.04	567.13
W	319+72.02	6.00'	567.00	567.09
X	319+82.02	6.00'	566.95	567.05
Y	319+92.02	6.00'	566.91	567.00
Z	320+02.02	6.00'	566.86	566.94
AA	320+12.02	6.00'	566.82	566.87
CL. BRG. E. ABUT.	320+25.31	6.00'	566.76	566.78
BK. E. ABUT.	320+27.31	6.00'	566.75	566.77

PGL EB

Location	Station	Offset	Theoretical Grade Elevations	Theoretical Grade Elevations Adjusted For Dead Load Deflection and Grinding
BK. W. ABUT.	317+12.40	0.00'	568.03	568.05
CL. BRG. W. ABUT.	317+14.40	0.00'	568.02	568.04
A	317+24.40	0.00'	567.98	568.02
B	317+34.40	0.00'	567.93	568.00
C	317+44.40	0.00'	567.89	567.98
D	317+54.40	0.00'	567.84	567.94
E	317+64.40	0.00'	567.80	567.90
F	317+74.40	0.00'	567.75	567.85
G	317+84.40	0.00'	567.71	567.79
H	317+94.40	0.00'	567.67	567.72
CL. W. BRG. PIER 1	318+07.69	0.00'	567.61	567.63
CL. PIER 1	318+08.81	0.00'	567.60	567.62
CL. E. BRG. PIER 1	318+09.94	0.00'	567.60	567.62
I	318+19.94	0.00'	567.55	567.63
J	318+29.94	0.00'	567.51	567.64
K	318+39.94	0.00'	567.46	567.64
L	318+49.94	0.00'	567.42	567.63
M	318+59.94	0.00'	567.37	567.61
N	318+69.94	0.00'	567.33	567.57
O	318+79.94	0.00'	567.29	567.52
P	318+89.94	0.00'	567.24	567.45
Q	318+99.94	0.00'	567.20	567.37
R	319+09.94	0.00'	567.15	567.28
S	319+19.94	0.00'	567.11	567.18
CL. W. BRG. PIER 2	319+29.77	0.00'	567.06	567.08
CL. PIER 2	319+30.90	0.00'	567.06	567.08
CL. E. BRG. PIER 2	319+32.02	0.00'	567.05	567.07
T	319+42.02	0.00'	567.01	567.06
U	319+52.02	0.00'	566.96	567.03
V	319+62.02	0.00'	566.92	567.01
W	319+72.02	0.00'	566.88	566.97
X	319+82.02	0.00'	566.83	566.93
Y	319+92.02	0.00'	566.79	566.88
Z	320+02.02	0.00'	566.74	566.82
AA	320+12.02	0.00'	566.70	566.75
CL. BRG. E. ABUT.	320+25.31	0.00'	566.64	566.66
BK. E. ABUT.	320+27.31	0.00'	566.63	566.65

BEAM 7

Location	Station	Offset	Theoretical Grade Elevations	Theoretical Grade Elevations Adjusted For Dead Load Deflection and Grinding
BK. W. ABUT.	317+12.40	-2.00'	567.99	568.01
CL. BRG. W. ABUT.	317+14.40	-2.00'	567.98	568.00
A	317+24.40	-2.00'	567.94	567.98
B	317+34.40	-2.00'	567.89	567.96
C	317+44.40	-2.00'	567.85	567.94
D	317+54.40	-2.00'	567.80	567.90
E	317+64.40	-2.00'	567.76	567.86
F	317+74.40	-2.00'	567.71	567.81
G	317+84.40	-2.00'	567.67	567.75
H	317+94.40	-2.00'	567.63	567.68
CL. W. BRG. PIER 1	318+07.69	-2.00'	567.57	567.59
CL. PIER 1	318+08.81	-2.00'	567.56	567.58
CL. E. BRG. PIER 1	318+09.94	-2.00'	567.56	567.58
I	318+19.94	-2.00'	567.51	567.59
J	318+29.94	-2.00'	567.47	567.60
K	318+39.94	-2.00'	567.42	567.60
L	318+49.94	-2.00'	567.38	567.59
M	318+59.94	-2.00'	567.33	567.57
N	318+69.94	-2.00'	567.29	567.53
O	318+79.94	-2.00'	567.25	567.48
P	318+89.94	-2.00'	567.20	567.41
Q	318+99.94	-2.00'	567.16	567.33
R	319+09.94	-2.00'	567.11	567.24
S	319+19.94	-2.00'	567.07	567.14
CL. W. BRG. PIER 2	319+29.77	-2.00'	567.02	567.04
CL. PIER 2	319+30.90	-2.00'	567.02	567.04
CL. E. BRG. PIER 2	319+32.02	-2.00'	567.01	567.03
T	319+42.02	-2.00'	566.97	567.02
U	319+52.02	-2.00'	566.92	566.99
V	319+62.02	-2.00'	566.88	566.97
W	319+72.02	-2.00'	566.84	566.93
X	319+82.02	-2.00'	566.79	566.89
Y	319+92.02	-2.00'	566.75	566.84
Z	320+02.02	-2.00'	566.70	566.78
AA	320+12.02	-2.00'	566.66	566.71
CL. BRG. E. ABUT.	320+25.31	-2.00'	566.60	566.62
BK. E. ABUT.	320+27.31	-2.00'	566.59	566.61

BEAM 8

Location	Station	Offset	Theoretical Grade Elevations	Theoretical Grade Elevations Adjusted For Dead Load Deflection and Grinding
BK. W. ABUT.	317+12.40	-10.00'	567.83	567.85
CL. BRG. W. ABUT.	317+14.40	-10.00'	567.82	567.84
A	317+24.40	-10.00'	567.78	567.82
B	317+34.40	-10.00'	567.73	567.80
C	317+44.40	-10.00'	567.69	567.78
D	317+54.40	-10.00'	567.64	567.74
E	317+64.40	-10.00'	567.60	567.70
F	317+74.40	-10.00'	567.55	567.65
G	317+84.40	-10.00'	567.51	567.59
H	317+94.40	-10.00'	567.47	567.52
CL. W. BRG. PIER 1	318+07.69	-10.00'	567.41	567.43
CL. PIER 1	318+08.81	-10.00'	567.40	567.42
CL. E. BRG. PIER 1	318+09.94	-10.00'	567.40	567.42
I	318+19.94	-10.00'	567.35	567.43
J	318+29.94	-10.00'	567.31	567.44
K	318+39.94	-10.00'	567.26	567.44
L	318+49.94	-10.00'	567.22	567.43
M	318+59.94	-10.00'	567.17	567.41
N	318+69.94	-10.00'	567.13	567.37
O	318+79.94	-10.00'	567.09	567.32
P	318+89.94	-10.00'	567.04	567.25
Q	318+99.94	-10.00'	567.00	567.17
R	319+09.94	-10.00'	566.95	567.08
S	319+19.94	-10.00'	566.91	566.98
CL. W. BRG. PIER 2	319+29.77	-10.00'	566.86	566.88
CL. PIER 2	319+30.90	-10.00'	566.86	566.88
CL. E. BRG. PIER 2	319+32.02	-10.00'	566.85	566.87
T	319+42.02	-10.00'	566.81	566.86
U	319+52.02	-10.00'	566.76	566.83
V	319+62.02	-10.00'	566.72	566.81
W	319+72.02	-10.00'	566.68	566.77
X	319+82.02	-10.00'	566.63	566.73
Y	319+92.02	-10.00'	566.59	566.68
Z	320+02.02	-10.00'	566.54	566.62
AA	320+12.02	-10.00'	566.50	566.55
CL. BRG. E. ABUT.	320+25.31	-10.00'	566.44	566.46
BK. E. ABUT.	320+27.31	-10.00'	566.43	566.45

FACE OF EB N. PARAPET

Location	Station	Offset	Theoretical Grade Elevations	Theoretical Grade Elevations Adjusted For Dead Load Deflection and Grinding
BK. W. ABUT.	317+12.40	-12.00'	567.79	567.81
CL. BRG. W. ABUT.	317+14.40	-12.00'	567.78	567.80
A	317+24.40	-12.00'	567.74	567.78
B	317+34.40	-12.00'	567.69	567.76
C	317+44.40	-12.00'	567.65	567.74
D	317+54.40	-12.00'	567.60	567.70
E	317+64.40	-12.00'	567.56	567.66
F	317+74.40	-12.00'	567.51	567.61
G	317+84.40	-12.00'	567.47	567.55
H	317+94.40	-12.00'	567.43	567.48
CL. W. BRG. PIER 1	318+07.69	-12.00'	567.37	567.39
CL. PIER 1	318+08.81	-12.00'	567.36	567.38
CL. E. BRG. PIER 1	318+09.94	-12.00'	567.36	567.38
I	318+19.94	-12.00'	567.31	567.39
J	318+29.94	-12.00'	567.27	567.40
K	318+39.94	-12.00'	567.22	567.40
L	318+49.94	-12.00'	567.18	567.39
M	318+59.94	-12.00'	567.13	567.37
N	318+69.94	-12.00'	567.09	567.33
O	318+79.94	-12.00'	567.05	567.28
P	318+89.94	-12.00'	567.00	567.21
Q	318+99.94	-12.00'	566.96	567.13
R	319+09.94	-12.00'	566.91	567.04
S	319+19.94	-12.00'	566.87	566.94
CL. W. BRG. PIER 2	319+29.77	-12.00'	566.82	566.84
CL. PIER 2	319+30.90	-12.00'	566.82	566.84
CL. E. BRG. PIER 2	319+32.02	-12.00'	566.81	566.83
T	319+42.02	-12.00'	566.77	566.82
U	319+52.02	-12.00'	566.72	566.79
V	319+62.02	-12.00'	566.68	566.77
W	319+72.02	-12.00'	566.64	566.73
X	319+82.02	-12.00'	566.59	566.69
Y	319+92.02	-12.00'	566.55	566.64
Z	320+02.02	-12.00'	566.50	566.58
AA	320+12.02	-12.00'	566.46	566.51
CL. BRG. E. ABUT.	320+25.31	-12.00'	566.40	566.42
BK. E. ABUT.	320+27.31	-12.00'	566.39	566.41

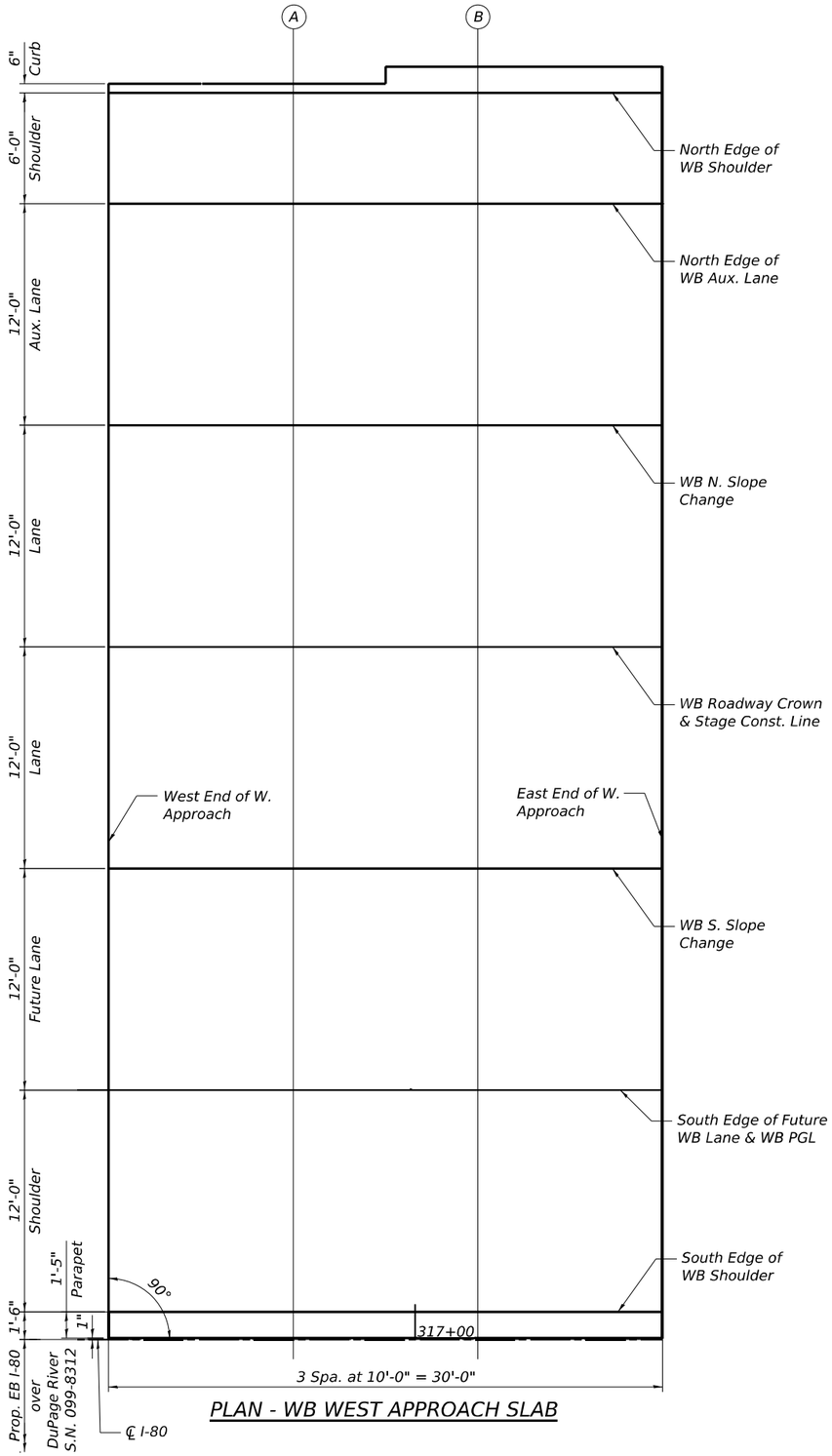

PLAN - WB WEST APPROACH SLAB

NORTH EDGE OF WB SHOULDER

Location	Station	Offset	Theoretical Grade Elevations	Theoretical Grade Elevations Adjusted For Grinding
W. End of W. Approach	316+83.40	-54.00'	568.04	568.06
A	316+93.40	-54.00'	568.00	568.02
B	317+03.40	-54.00'	567.95	567.97
E. End of W. Approach	317+13.40	-54.00'	567.91	567.93

NORTH EDGE OF WB AUX. LANE

Location	Station	Offset	Theoretical Grade Elevations	Theoretical Grade Elevations Adjusted For Grinding
W. End of W. Approach	316+83.40	-48.00'	568.16	568.18
A	316+93.40	-48.00'	568.12	568.14
B	317+03.40	-48.00'	568.07	568.09
E. End of W. Approach	317+13.40	-48.00'	568.03	568.05

WB N. SLOPE CHANGE

Location	Station	Offset	Theoretical Grade Elevations	Theoretical Grade Elevations Adjusted For Grinding
W. End of W. Approach	316+83.40	-36.00'	568.40	568.42
A	316+93.40	-36.00'	568.36	568.38
B	317+03.40	-36.00'	568.31	568.33
E. End of W. Approach	317+13.40	-36.00'	568.27	568.29

WB ROADWAY CROWN & STAGE CONST. LINE

Location	Station	Offset	Theoretical Grade Elevations	Theoretical Grade Elevations Adjusted For Grinding
W. End of W. Approach	316+83.40	-24.00'	568.58	568.60
A	316+93.40	-24.00'	568.54	568.56
B	317+03.40	-24.00'	568.49	568.51
E. End of W. Approach	317+13.40	-24.00'	568.45	568.47

WB S. SLOPE CHANGE

Location	Station	Offset	Theoretical Grade Elevations	Theoretical Grade Elevations Adjusted For Grinding
W. End of W. Approach	316+83.40	-12.00'	568.40	568.42
A	316+93.40	-12.00'	568.36	568.38
B	317+03.40	-12.00'	568.31	568.33
E. End of W. Approach	317+13.40	-12.00'	568.27	568.29

SOUTH EDGE OF FUTURE WB LANE & WB PGL

Location	Station	Offset	Theoretical Grade Elevations	Theoretical Grade Elevations Adjusted For Grinding
W. End of W. Approach	316+83.40	0.00'	568.16	568.18
A	316+93.40	0.00'	568.12	568.14
B	317+03.40	0.00'	568.07	568.09
E. End of W. Approach	317+13.40	0.00'	568.03	568.05

SOUTH EDGE OF WB SHOULDER

Location	Station	Offset	Theoretical Grade Elevations	Theoretical Grade Elevations Adjusted For Grinding
W. End of W. Approach	316+83.40	12.00'	567.92	567.94
A	316+93.40	12.00'	567.88	567.90
B	317+03.40	12.00'	567.83	567.85
E. End of W. Approach	317+13.40	12.00'	567.79	567.81

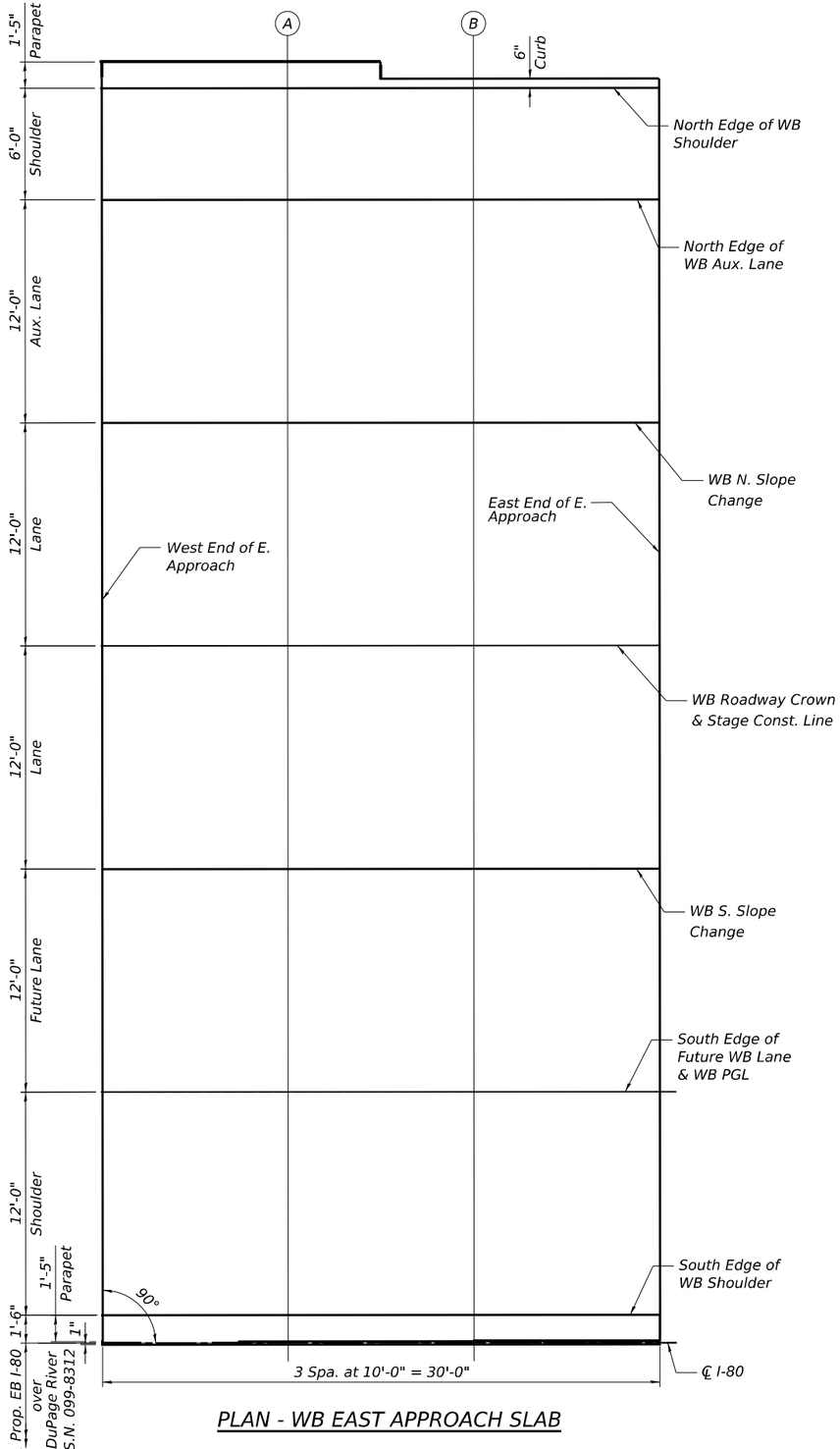

PLAN - WB EAST APPROACH SLAB

N

NORTH EDGE OF WB SHOULDER

Location	Station	Offset	Theoretical Grade Elevations	Theoretical Grade Elevations Adjusted For Grinding
W. End of E. Approach	320+26.31	-54.00'	566.51	566.53
A	320+36.31	-54.00'	566.47	566.49
B	320+46.31	-54.00'	566.42	566.45
E. End of E. Approach	320+56.31	-54.00'	566.38	566.40

NORTH EDGE OF WB AUX. LANE

Location	Station	Offset	Theoretical Grade Elevations	Theoretical Grade Elevations Adjusted For Grinding
W. End of E. Approach	320+26.31	-48.00'	566.63	566.65
A	320+36.31	-48.00'	566.59	566.61
B	320+46.31	-48.00'	566.54	566.57
E. End of E. Approach	320+56.31	-48.00'	566.50	566.52

WB N. SLOPE CHANGE

Location	Station	Offset	Theoretical Grade Elevations	Theoretical Grade Elevations Adjusted For Grinding
W. End of E. Approach	320+26.31	-36.00'	566.87	566.89
A	320+36.31	-36.00'	566.83	566.85
B	320+46.31	-36.00'	566.78	566.81
E. End of E. Approach	320+56.31	-36.00'	566.74	566.76

WB ROADWAY CROWN & STAGE CONST. LINE

Location	Station	Offset	Theoretical Grade Elevations	Theoretical Grade Elevations Adjusted For Grinding
W. End of E. Approach	320+26.31	-24.00'	567.05	567.07
A	320+36.31	-24.00'	567.01	567.03
B	320+46.31	-24.00'	566.96	566.99
E. End of E. Approach	320+56.31	-24.00'	566.92	566.94

WB S. SLOPE CHANGE

Location	Station	Offset	Theoretical Grade Elevations	Theoretical Grade Elevations Adjusted For Grinding
W. End of E. Approach	320+26.31	-12.00'	566.87	566.89
A	320+36.31	-12.00'	566.83	566.85
B	320+46.31	-12.00'	566.78	566.81
E. End of E. Approach	320+56.31	-12.00'	566.74	566.76

SOUTH EDGE OF FUTURE WB LANE & WB PGL

Location	Station	Offset	Theoretical Grade Elevations	Theoretical Grade Elevations Adjusted For Grinding
W. End of E. Approach	320+26.31	0.00'	566.63	566.65
A	320+36.31	0.00'	566.59	566.61
B	320+46.31	0.00'	566.54	566.57
E. End of E. Approach	320+56.31	0.00'	566.50	566.52

SOUTH EDGE OF WB SHOULDER

Location	Station	Offset	Theoretical Grade Elevations	Theoretical Grade Elevations Adjusted For Grinding
W. End of E. Approach	320+26.31	12.00'	566.39	566.41
A	320+36.31	12.00'	566.35	566.37
B	320+46.31	12.00'	566.30	566.33
E. End of E. Approach	320+56.31	12.00'	566.26	566.28

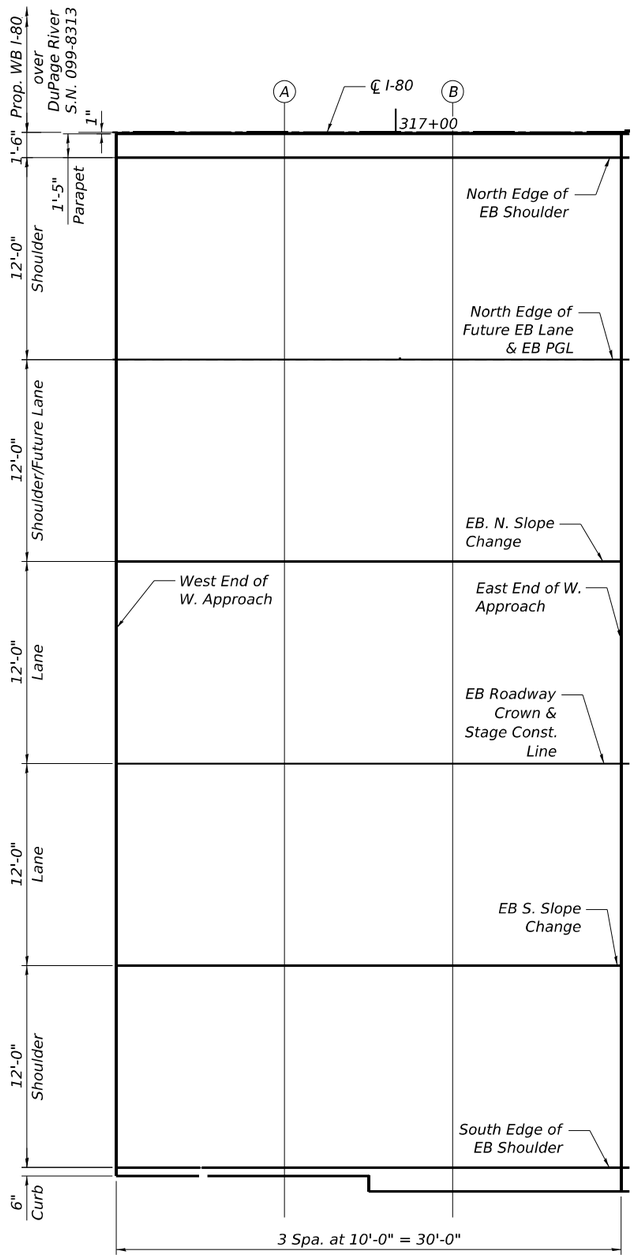

PLAN - EB WEST APPROACH

N

NORTH EDGE OF EB SHOULDER

Location	Station	Offset	Theoretical Grade Elevations	Theoretical Grade Elevations Adjusted For Grinding
W. End of W. Approach	316+83.40	-12.00'	567.92	567.94
A	316+93.40	-12.00'	567.88	567.90
B	317+03.40	-12.00'	567.83	567.85
E. End of W. Approach	317+13.40	-12.00'	567.79	567.81

NORTH EDGE OF FUTURE EB LANE & EB PGL

Location	Station	Offset	Theoretical Grade Elevations	Theoretical Grade Elevations Adjusted For Grinding
W. End of W. Approach	316+83.40	0.00'	568.16	568.18
A	316+93.40	0.00'	568.12	568.14
B	317+03.40	0.00'	568.07	568.09
E. End of W. Approach	317+13.40	0.00'	568.03	568.05

EB N. SLOPE CHANGE

Location	Station	Offset	Theoretical Grade Elevations	Theoretical Grade Elevations Adjusted For Grinding
W. End of W. Approach	316+83.40	12.00'	568.40	568.42
A	316+93.40	12.00'	568.36	568.38
B	317+03.40	12.00'	568.31	568.33
E. End of W. Approach	317+13.40	12.00'	568.27	568.29

EB ROADWAY CROWN & STAGE CONST. LINE

Location	Station	Offset	Theoretical Grade Elevations	Theoretical Grade Elevations Adjusted For Grinding
W. End of W. Approach	316+83.40	24.00'	568.58	568.60
A	316+93.40	24.00'	568.54	568.56
B	317+03.40	24.00'	568.49	568.51
E. End of W. Approach	317+13.40	24.00'	568.45	568.47

EB S. SLOPE CHANGE

Location	Station	Offset	Theoretical Grade Elevations	Theoretical Grade Elevations Adjusted For Grinding
W. End of W. Approach	316+83.40	36.00'	568.40	568.42
A	316+93.40	36.00'	568.36	568.38
B	317+03.40	36.00'	568.31	568.33
E. End of W. Approach	317+13.40	36.00'	568.27	568.29

SOUTH EDGE OF EB SHOULDER

Location	Station	Offset	Theoretical Grade Elevations	Theoretical Grade Elevations Adjusted For Grinding
W. End of W. Approach	316+83.40	48.00'	568.16	568.18
A	316+93.40	48.00'	568.12	568.14
B	317+03.40	48.00'	568.07	568.09
E. End of W. Approach	317+13.40	48.00'	568.03	568.05

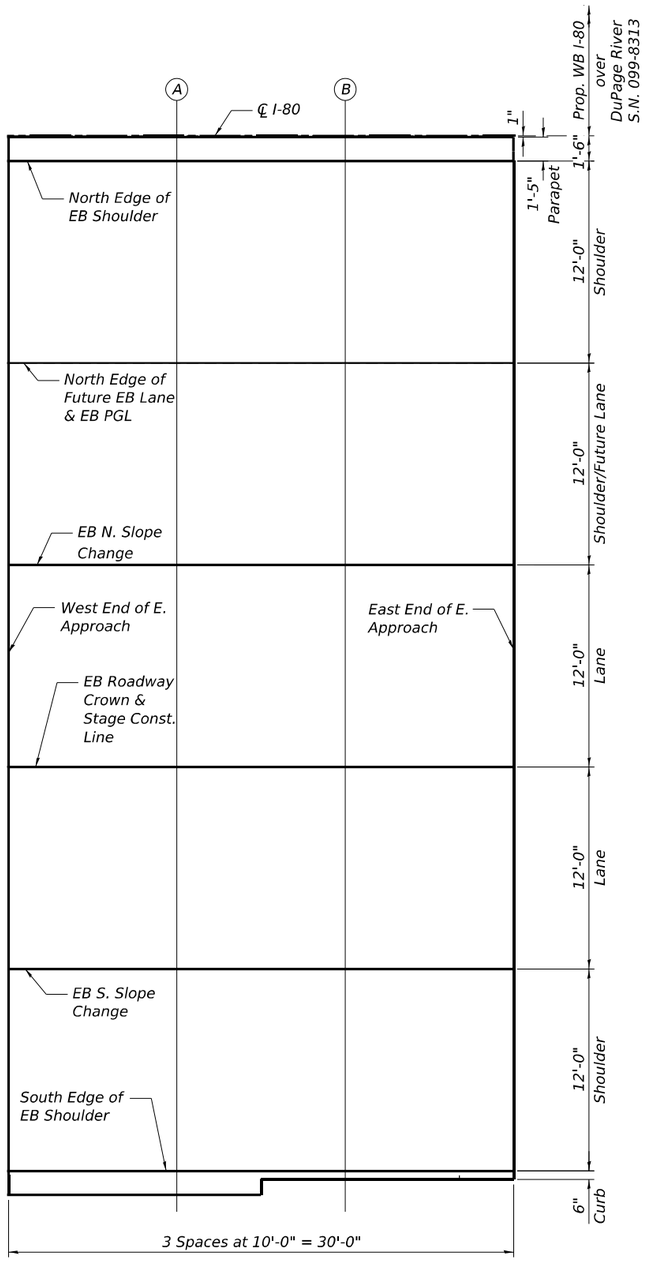

PLAN - EB EAST APPROACH

NORTH EDGE OF EB SHOULDER

Location	Station	Offset	Theoretical Grade Elevations	Theoretical Grade Elevations Adjusted For Grinding
W. End of E. Approach	320+26.31	-12.00'	566.39	566.41
A	320+36.31	-12.00'	566.35	566.37
B	320+46.31	-12.00'	566.30	566.33
E. End of E. Approach	320+56.31	-12.00'	566.26	566.28

NORTH EDGE OF FUTURE EB LANE & EB PGL

Location	Station	Offset	Theoretical Grade Elevations	Theoretical Grade Elevations Adjusted For Grinding
W. End of E. Approach	320+26.31	0.00'	566.63	566.65
A	320+36.31	0.00'	566.59	566.61
B	320+46.31	0.00'	566.54	566.57
E. End of E. Approach	320+56.31	0.00'	566.50	566.52

EB N. SLOPE CHANGE

Location	Station	Offset	Theoretical Grade Elevations	Theoretical Grade Elevations Adjusted For Grinding
W. End of E. Approach	320+26.31	12.00'	566.87	566.89
A	320+36.31	12.00'	566.83	566.85
B	320+46.31	12.00'	566.78	566.81
E. End of E. Approach	320+56.31	12.00'	566.74	566.76

EB ROADWAY CROWN & STAGE CONST. LINE

Location	Station	Offset	Theoretical Grade Elevations	Theoretical Grade Elevations Adjusted For Grinding
W. End of E. Approach	320+26.31	24.00'	567.05	567.07
A	320+36.31	24.00'	567.01	567.03
B	320+46.31	24.00'	566.96	566.99
E. End of E. Approach	320+56.31	24.00'	566.92	566.94

EB S. SLOPE CHANGE

Location	Station	Offset	Theoretical Grade Elevations	Theoretical Grade Elevations Adjusted For Grinding
W. End of E. Approach	320+26.31	36.00'	566.87	566.89
A	320+36.31	36.00'	566.83	566.85
B	320+46.31	36.00'	566.78	566.81
E. End of E. Approach	320+56.31	36.00'	566.74	566.76

SOUTH EDGE OF EB SHOULDER

Location	Station	Offset	Theoretical Grade Elevations	Theoretical Grade Elevations Adjusted For Grinding
W. End of E. Approach	320+26.31	48.00'	566.63	566.65
A	320+36.31	48.00'	566.59	566.61
B	320+46.31	48.00'	566.54	566.57
E. End of E. Approach	320+56.31	48.00'	566.50	566.52

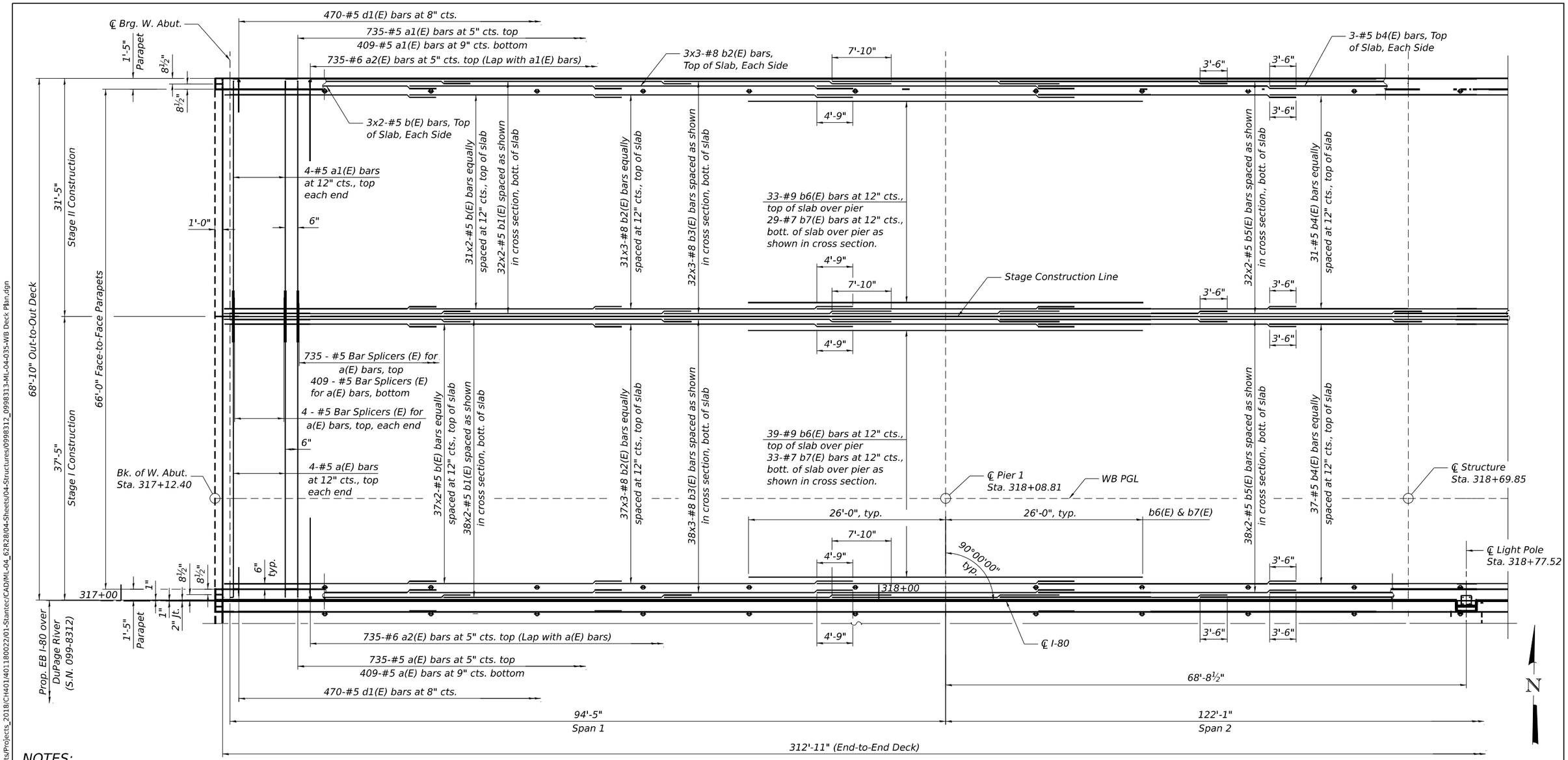

PLAN

(Symmetrical About ℄ Structure)

NOTES:

1. Bars indicated thus 31 x 2 - #5 etc. indicates 31 lines of bars with 2 lengths per line.
2. For deck cross section, see Sheet SA-36.
3. For parapet elevations and reinforcement, see Sheet SA-37.
4. For abutment diaphragm elevations and Section A-A, see Sheet SA-39.
5. For pier diaphragm details, see Sheet SA-40.
6. For deck details, bar diagrams, minimum bar laps and Bill of Material, see Sheet SA-41.
7. For bar splicer details, see Sheet SA-88.
8. For scupper and floor drain spacing, see Sheet SA-01.
9. For reinforcement around scupper, see Sheet SA-41.

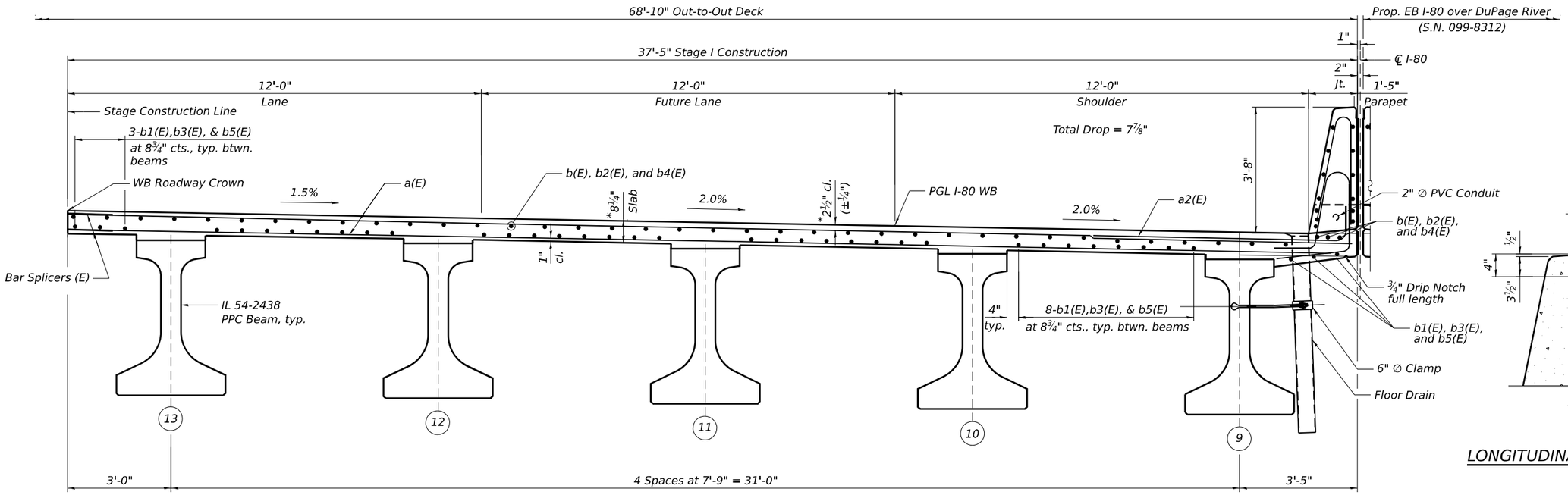

TYPICAL CROSS SECTION (NEAR MIDSPAN)

(Looking East)

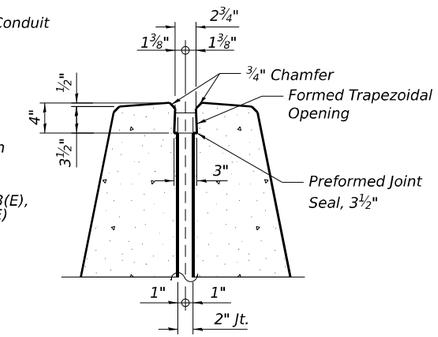

LONGITUDINAL JOINT SEAL DETAIL

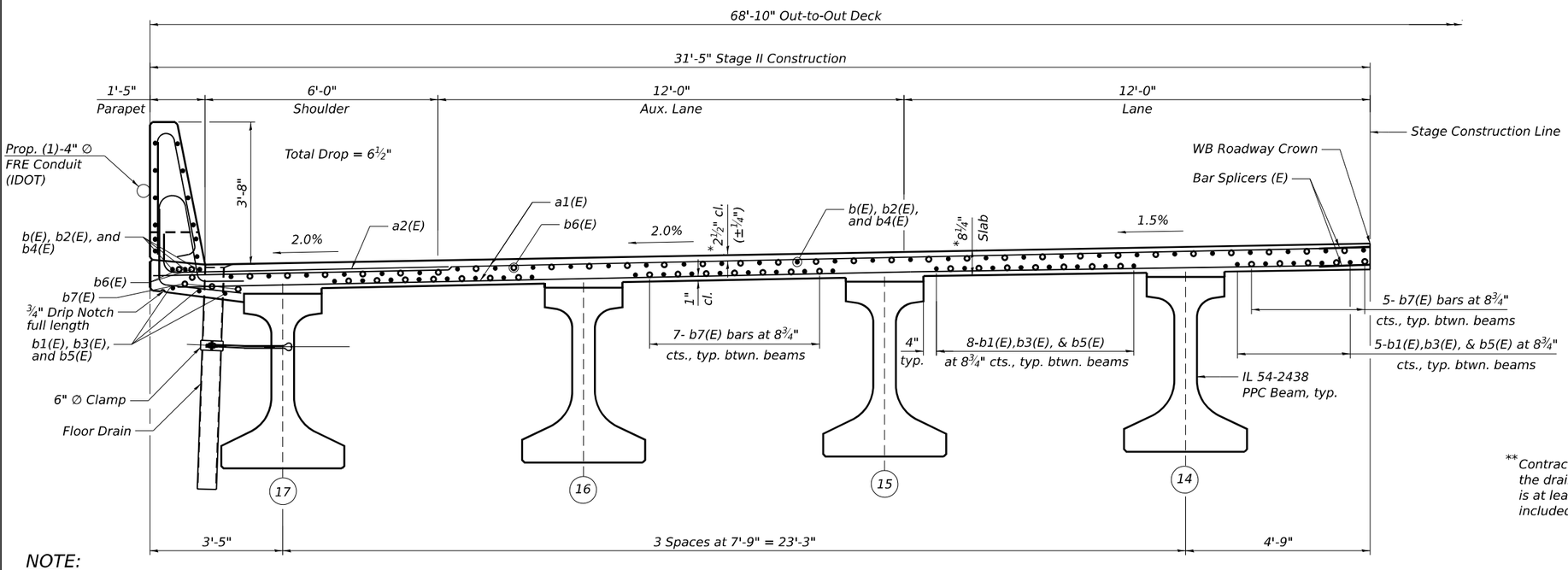

TYPICAL CROSS SECTION (NEAR PIER)

(Looking East)

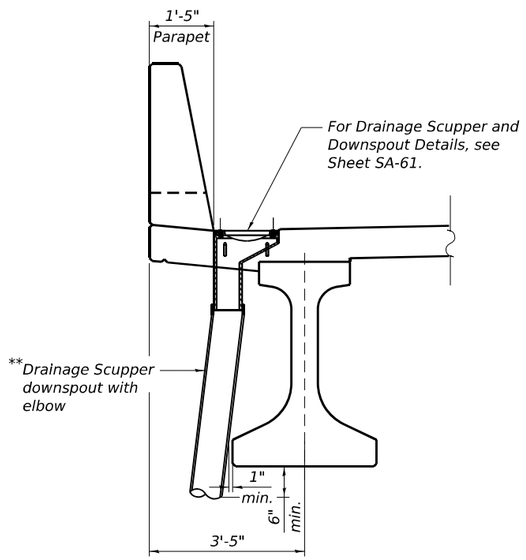

PARTIAL CROSS SECTION AT SCUPPER

**Contractor shall provide appropriate elbows, extensions, and/or connections for the drainage scupper such that the clearance between downspout and PPC beam is at least 1 inch. Cost of additional elbow, extensions, and connections shall be included in the cost of Drainage Scuppers, DS-11.

NOTE:

1. For Notes, see Sheet SA-35.

*Prior to grinding

HBM ENGINEERING GROUP, LLC	USER NAME =	DESIGNED - JMI, JJS	REVISED -	STATE OF ILLINOIS DEPARTMENT OF TRANSPORTATION	WB DECK CROSS SECTION STRUCTURE NOS. 099-8312 (EB) & 099-8313 (WB)
		CHECKED - MI	REVISED -		
	PLOT SCALE =	DRAWN - JMI	REVISED -		
	PLOT DATE =	CHECKED - MI	REVISED -		SHEET SA-36 OF SA-98 SHEETS

F.A.I. RTE.	SECTION	COUNTY	TOTAL SHEETS	SHEET NO.
I-80	FAI 80 21 STRUCTURE 7	WILL	1059	569
		CONTRACT NO. 62R28		
	ILLINOIS	FED. AID PROJECT		

MODEL: Default
FILE NAME: pw://transystems-pw.bentley.com:transyscorp-pw1-hosted/Documents/Projects_2018/CH401/401180022/01-Stantec/CAD/MI_04_62R28/04-Sheets/04-Structures/0998312_0998313-MI_04-036-WB Deck Cross Section.dgn
9/5/2023 6:09:31 PM

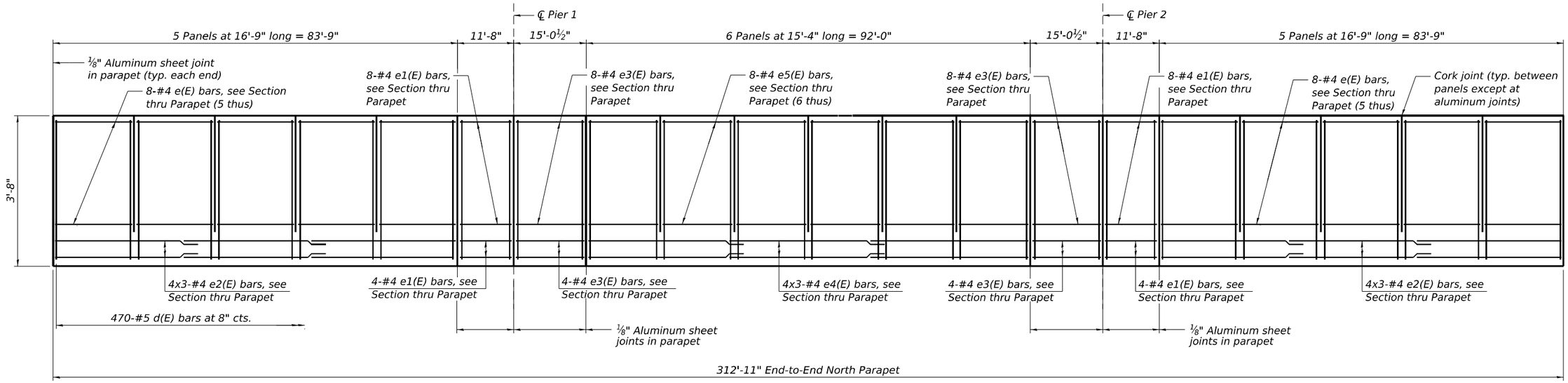

INSIDE ELEVATION OF NORTH PARAPET

(Looking North)

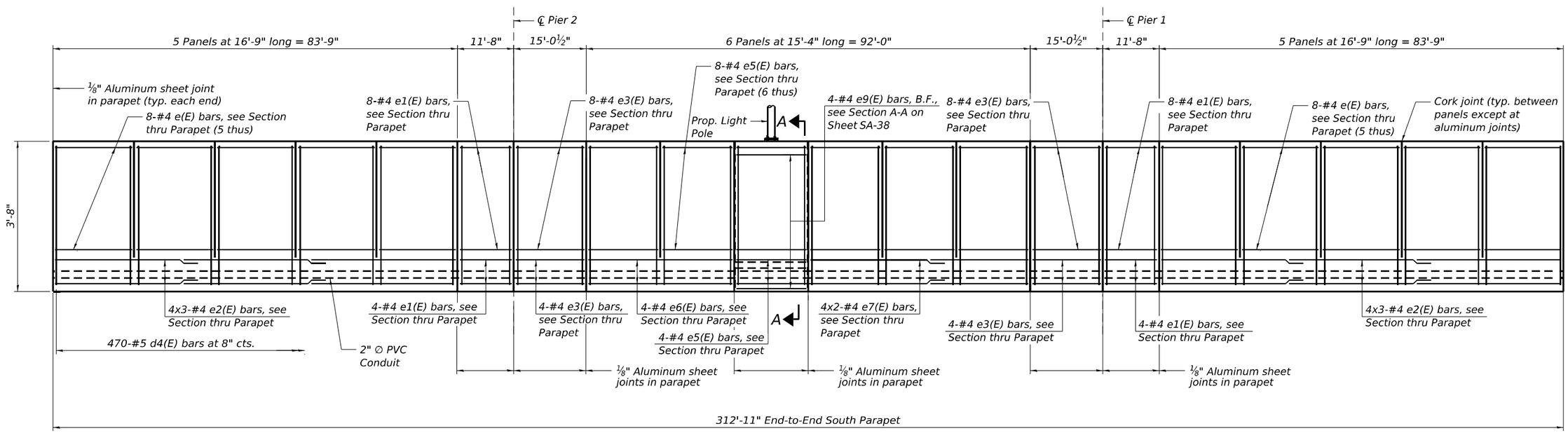

INSIDE ELEVATION OF SOUTH PARAPET

(Looking South)

NOTES:

1. For notes, see Sheet SA-35.
2. For Sections thru Parapets, Parapet joint details, bar diagrams and Bill of Material, see Sheet SA-41.

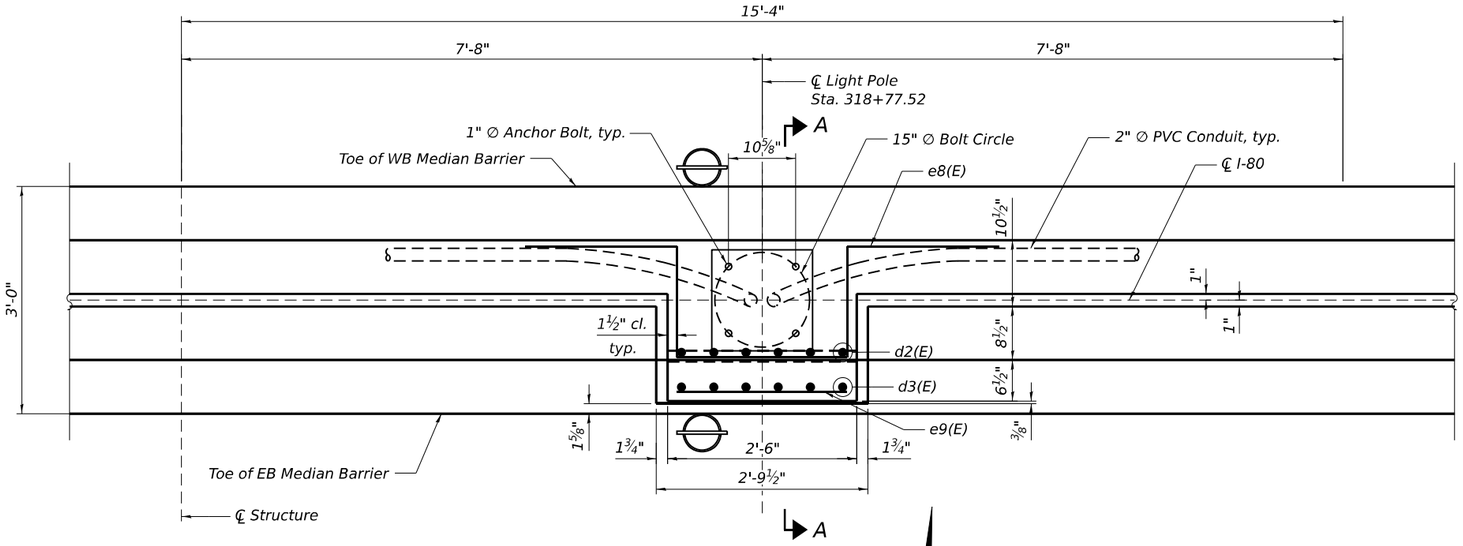

TOP PLAN

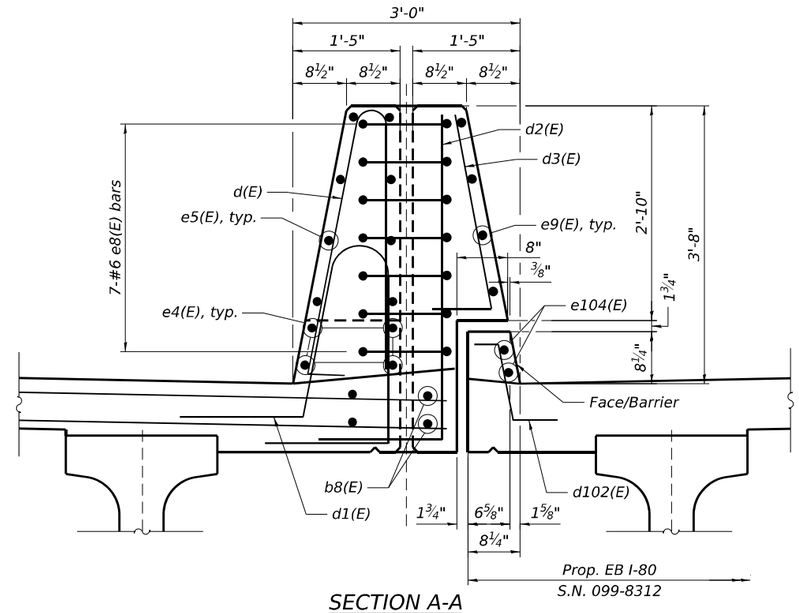

SECTION A-A

(Looking Upstation)
(Light Pole and Conduit not shown for clarity)

NOTE:

1. For e104(E) and d102(E) bar details, see Sheets SA-44 and SA-47.

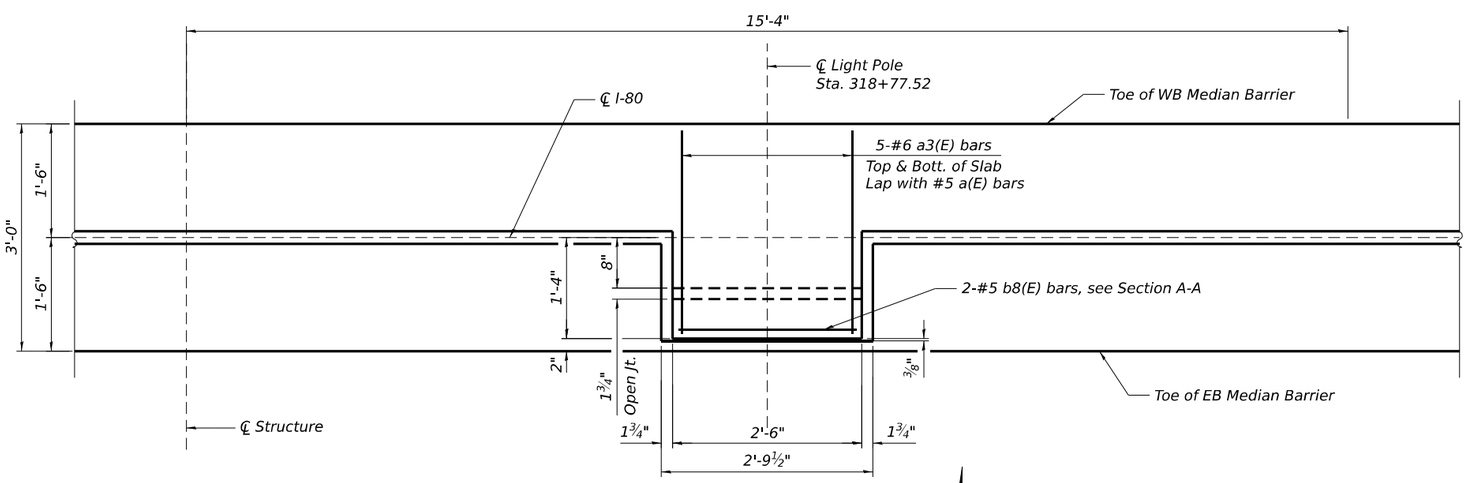

BOTTOM PLAN

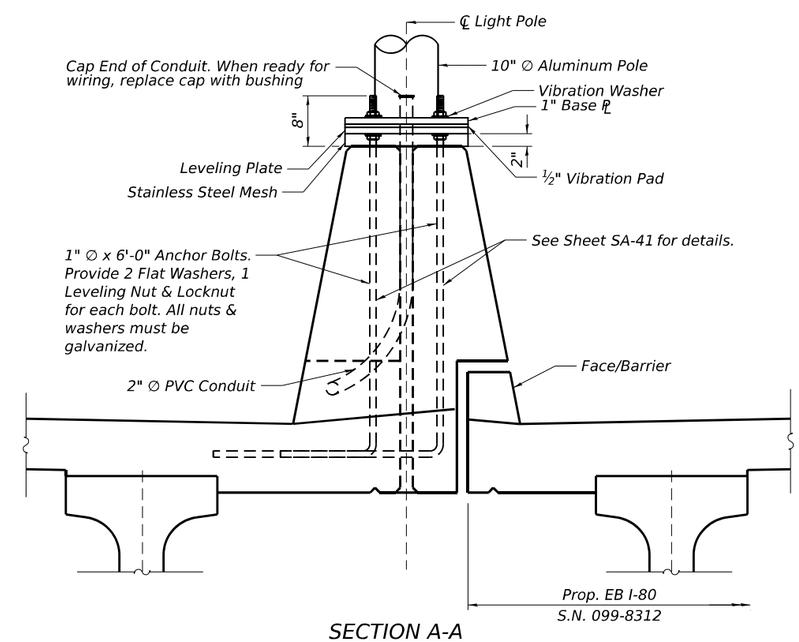

SECTION A-A

(Looking Upstation)
(Showing Light Pole, Anchor Bolts, & Conduit)

MODEL: Default
FILE NAME: pw://transystems-pw.bentley.com:transyscorp-pw1-hosted/Documents/Projects_2018/CH401/401180022/01-Stantec/CAD/ML-04_62R28/04-Sheets/04-Structures/0998312_0998313-ML-04-037A-WB Median Mounted Light Pole Details.dgn

9/5/2023 6:09:35 PM

HBM ENGINEERING GROUP, LLC

USER NAME =	DESIGNED - JMI, JJS	REVISED -	
	CHECKED - MI	REVISED -	
PLOT SCALE =	DRAWN - JMI	REVISED -	
PLOT DATE =	CHECKED - MI	REVISED -	

STATE OF ILLINOIS
DEPARTMENT OF TRANSPORTATION

WB MEDIAN MOUNTED LIGHT POLE DETAILS
STRUCTURE NOS. 099-8312 (EB) & 099-8313 (WB)

SHEET SA-38 OF SA-98 SHEETS

F.A.I. RTE.	SECTION	COUNTY	TOTAL SHEETS	SHEET NO.
I-80	FAI 80 21 STRUCTURE 7	WILL	1059	571
		CONTRACT NO. 62R28		
		ILLINOIS	FED. AID PROJECT	

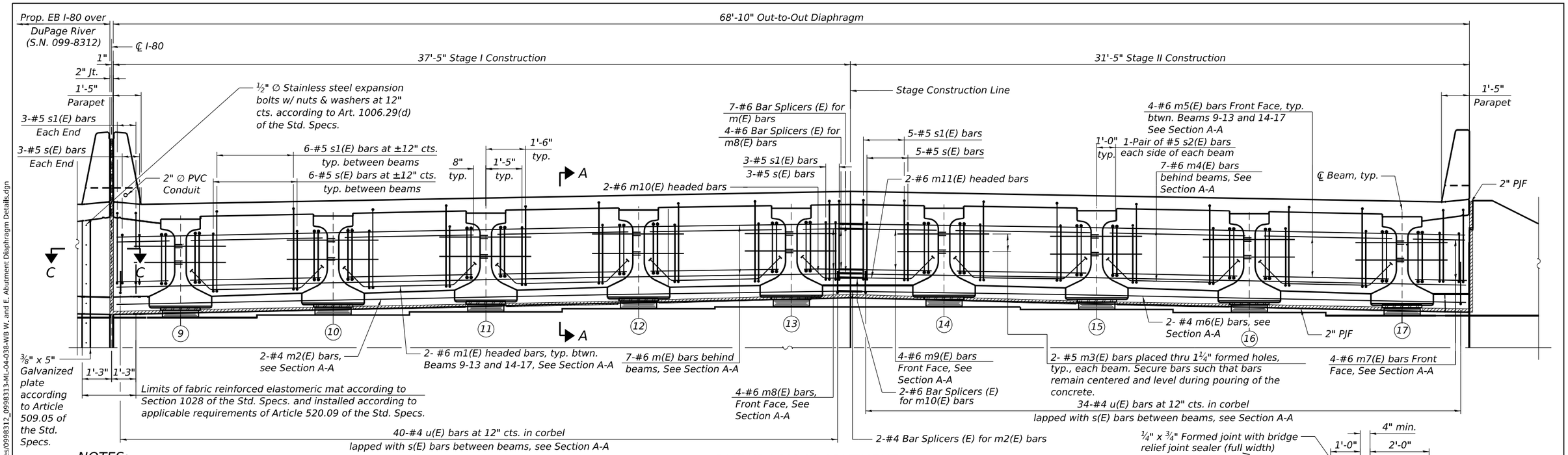

DIAPHRAGM AT ABUTMENT

(West Abutment shown, East Abutment similar opposite hand)
(Side retainers at each side of bearing not shown for clarity)

NOTES:

1. For Superstructure details, bar diagrams and Bill of Materials, see Sheet SA-41.
2. Reinforcement bars in diaphragms are billed with the superstructure on Sheet SA-41.
3. Concrete in diaphragm is included with Concrete Superstructure on Sheet SA-41.
4. The approach slab seat shall have a constant slope determined from the control points shown.
5. For bearing details, see Sheet SA-70.
6. Cost of fabric reinforced elastomeric mat, galvanized plate, stainless steel expansion bolts with nuts and washers and installation are included in the cost of Concrete Superstructure.

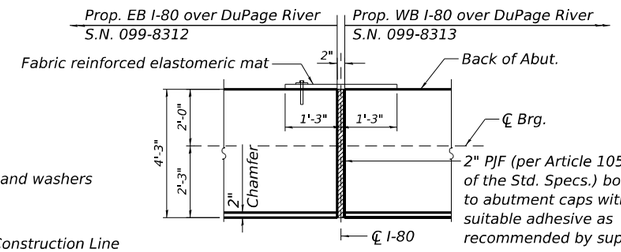

SECTION C-C

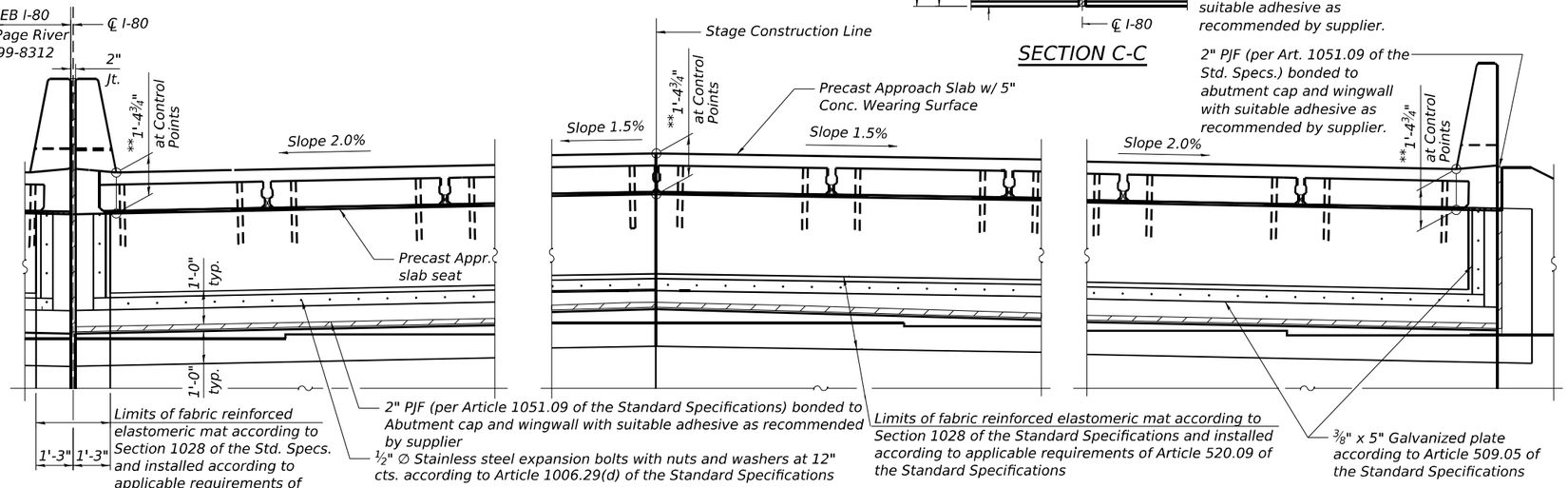

SECTION B-B

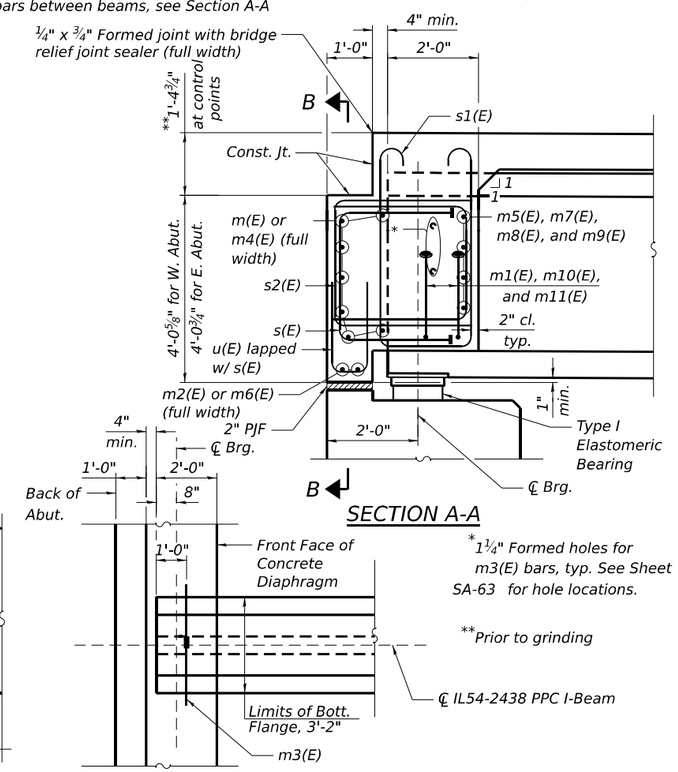

SECTION A-A

*1¼" Formed holes for m3(E) bars, typ. See Sheet SA-63 for hole locations.

**Prior to grinding

PARTIAL PLAN AT ABUTMENT

(Showing bottom flange of girder)

MODEL: Default
FILE NAME: pw://transystems-pw.bentley.com:transyscorp-pw1-hosted/Documents/Projects_2018/CH401401180022/01-Stantec/CAD/MI-04_62R28/04-Sheets/04-Structures/0998312_0998313-MI-04-038-WB W. and E. Abutment Diaphragm Details.dgn

9/5/2023 6:09:41 PM

HBM ENGINEERING GROUP, LLC

USER NAME =	DESIGNED - JMI, JJS	REVISED -	
	CHECKED - MI	REVISED -	
PLOT SCALE =	DRAWN - JMI	REVISED -	
PLOT DATE =	CHECKED - MI	REVISED -	

STATE OF ILLINOIS
DEPARTMENT OF TRANSPORTATION

WB W. AND E. ABUTMENT DIAPHRAGM DETAILS
STRUCTURE NOS. 099-8312 (EB) & 099-8313 (WB)

SHEET SA-39 OF SA-98 SHEETS

F.A.I. RTE.	SECTION	COUNTY	TOTAL SHEETS	SHEET NO.
I-80	FAI 80 21 STRUCTURE 7	WILL	1059	572
		CONTRACT NO. 62R28		
		ILLINOIS	FED. AID PROJECT	

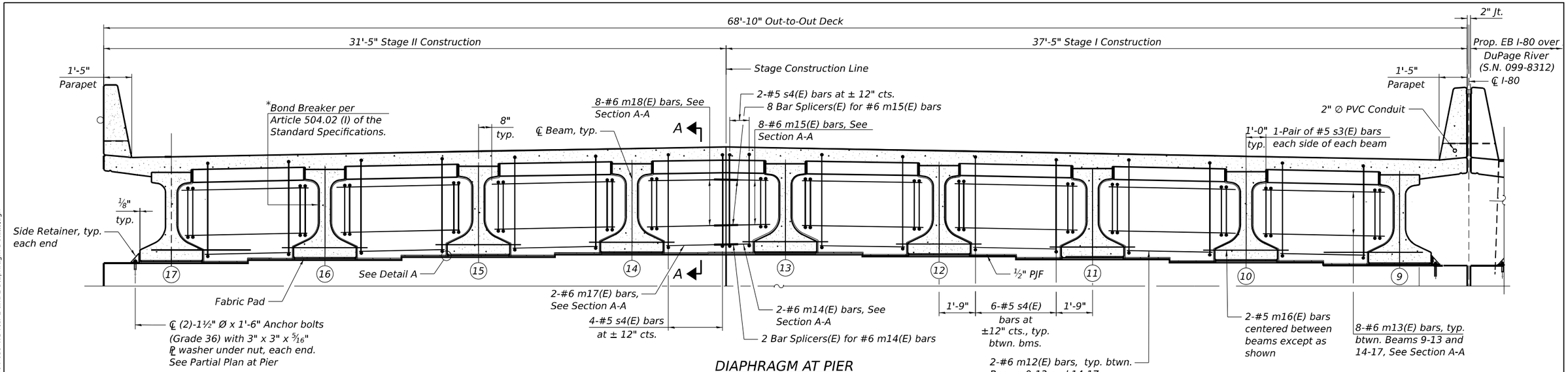

DIAPHRAGM AT PIER

*Bonded to sides of beams embedded into diaphragm.
(Pier 1 shown, Pier 2 similar)
(Looking East)

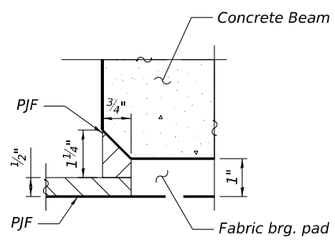

DETAIL A

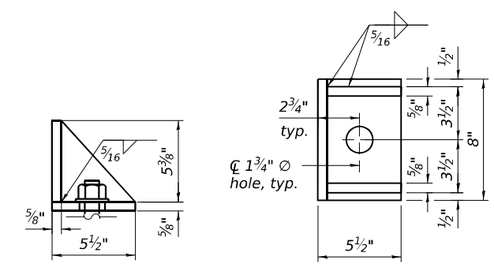

SIDE RETAINER

(2 required each side of pier)
Equivalent rolled angle with stiffeners will be allowed in lieu of welded plates.
(Total 8 Required)

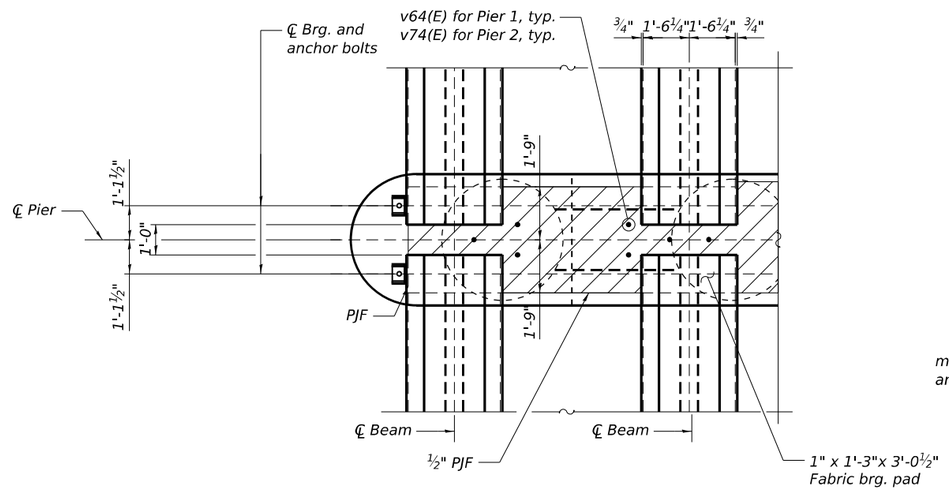

PARTIAL PLAN AT PIER

(Showing bearing pads and PJF details)

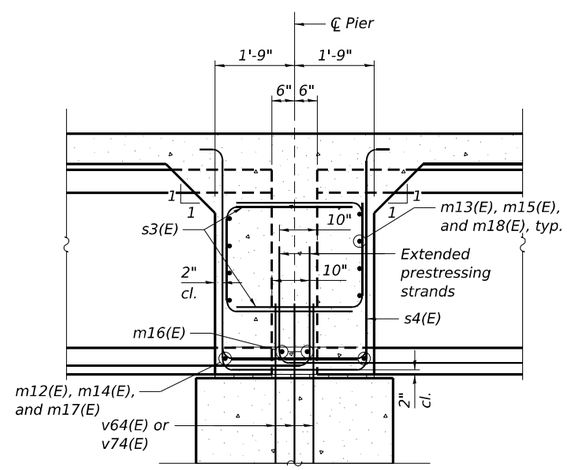

SECTION A-A

NOTES:

1. For superstructure details, bar diagrams, and Bill of Material, see Sheet SA-41.
2. Reinforcement bars in diaphragms are billed with the superstructure on Sheet SA-41.
3. Concrete in diaphragm is included with Concrete Superstructue on Sheet SA-41.
4. The side retainers shall be galvanized after shop fabrication according to AASHTO M 111 and ASTM 385.
5. Cost of side retainer and anchor bolts at piers shall be included with Concrete Structures.
6. Anchor bolts and side retainers shall be according to Article 521.06 of the Standard Specifications. Side retainers shall be hot dip galvanized.
7. Cost of fabric bearing pad is included with Furnishing and Erecting Precast Prestressed Concrete Beams, IL54N.
8. Anchor bolts and side retainers shall be installed as each exterior beam is erected unless an equivalent temporary means of lateral restraint is used.
9. For v64(E) and v74(E) bars, see Sheets SA-80 and SA-82 , respectively.
10. For Detail of bar s3(E), see Sheet SA-41.
11. For Bar Splicer details, see Sheet SA-88.

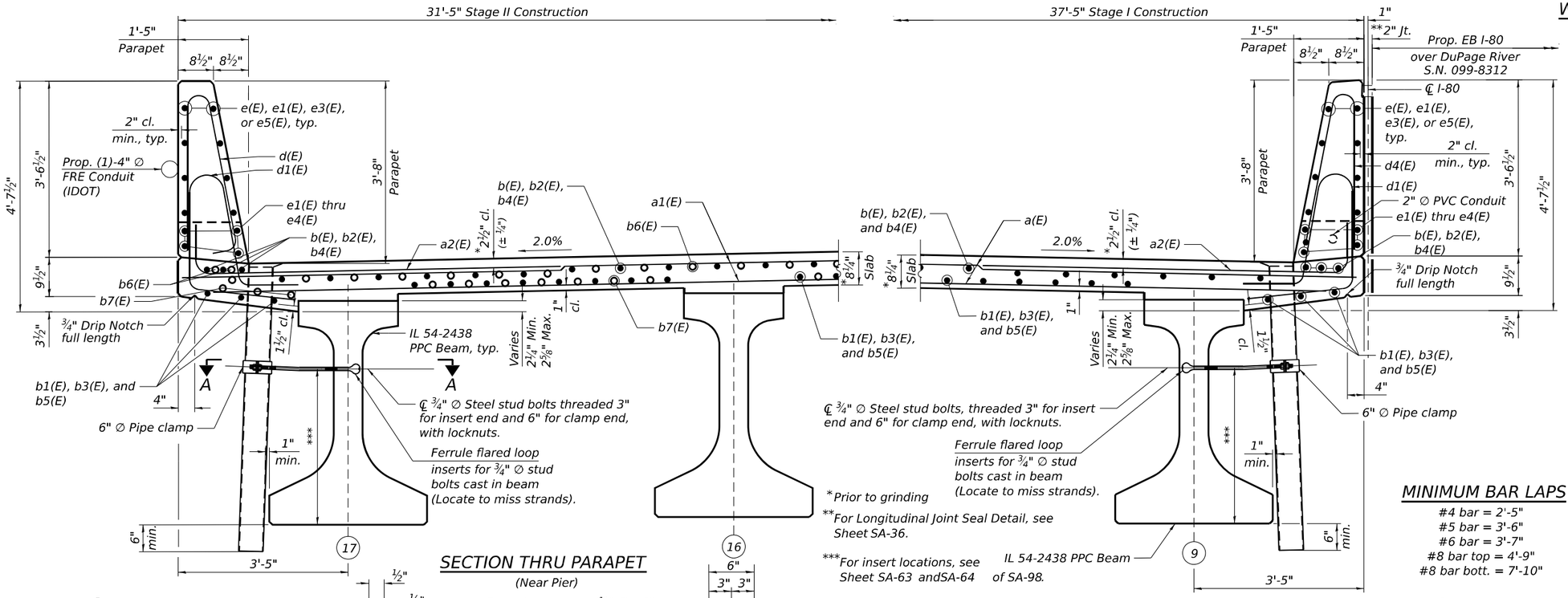

SECTION THRU PARAPET
(Near Pier)

SECTION THRU PARAPET
(Near Midspan)

MINIMUM BAR LAPS

#4 bar = 2'-5"
#5 bar = 3'-6"
#6 bar = 3'-7"
#8 bar top = 4'-9"
#8 bar bott. = 7'-10"

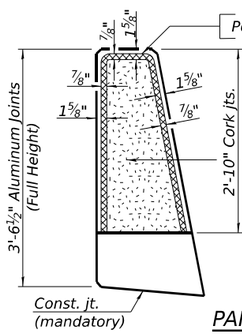

PARAPET JOINT DETAILS

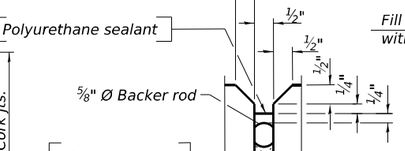

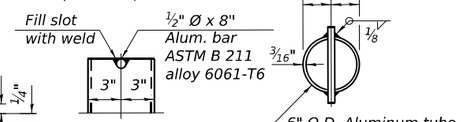

ALUMINUM TUBE

TOP PLAN
(Showing aluminum tube)

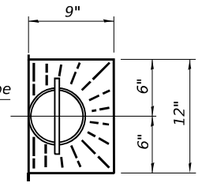

TOP PLAN

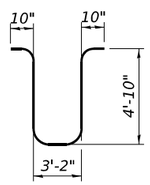

BAR s4(E)

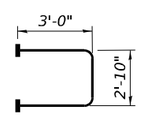

BAR s(E)
(Headed)

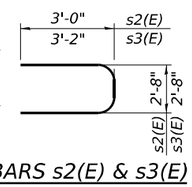

BARS s2(E) & s3(E)

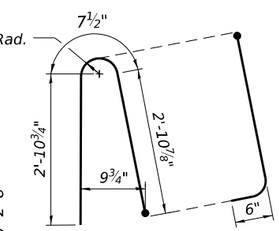

BAR d4(E)

NOTES:

1. Protective coat shall be applied to the top and inside faces of north and south parapets and to the top of deck.
2. Fiberglass pipe shall conform to ASTM D2996, with short-time rupture strength hoop tensile stress of 30,000 p.s.i minimum.
3. The exterior surfaces of the fiberglass floor drains shall be pigmented by the manufacturer with a color that matches the concrete.
4. The top portion of aluminum floor drains shall be coated to minimize reaction with wet concrete.
5. The clamping device and inserts shall be galvanized according to AASHTO M232. Cost of clamping device included with Floor Drains.
6. The ⅛" aluminum sheet shall be ASTM B 209 alloy 3003-H14 and coated to minimize reaction with wet concrete. Cost included with Concrete Superstructure.
7. The polyurethane sealant shall be according to Article 1050.04 of the Std. Spec. and the color shall be gray.
8. Headed bars shall conform to ASTM A970 with threaded attachment; Class HA; and reinforcement bars conforming to ASTM A706. Cost included with Reinforcement Bars, Epoxy Coated.
9. Cost of 1" ∅ anchor bolts is included in the cost of Concrete Superstructure. 2" ∅ PVC conduit shall be paid for separately (See Electrical Plans).

FIBERGLASS PIPE

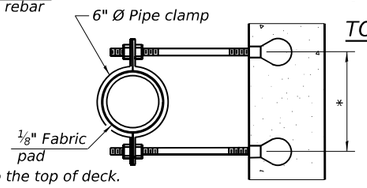

SECTION A-A
*Dimension as required by pipe clamp

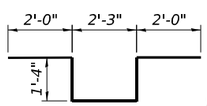

BAR e6(E)

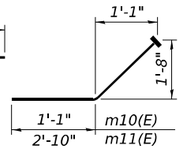

BARS m10(E) & m11(E)

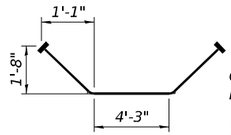

BAR m1(E)

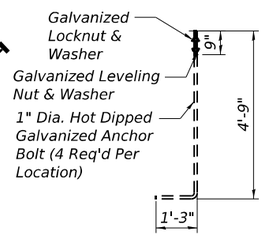

1" ∅ ANCHOR BOLT
(ASTM F1554 Grade 105)

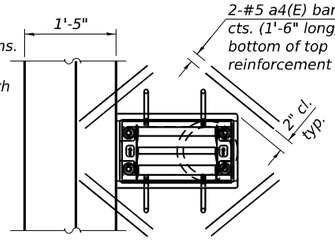

SCUPPER PLAN

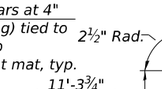

BAR u(E)

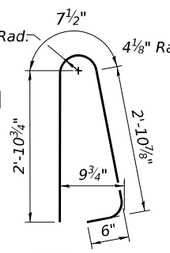

BAR d(E)

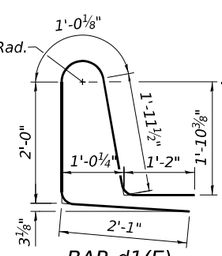

BAR d1(E)

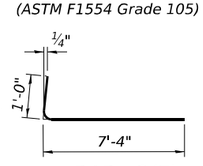

BAR a2(E)

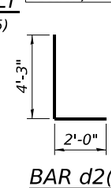

BAR d2(E)

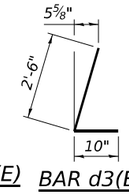

BAR d3(E)

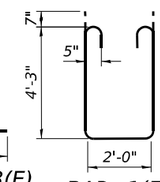

BAR s1(E)

WB SUPERSTRUCTURE BILL OF MATERIAL

Bar	No.	Size	Length	Shape
a(E)	1152	#5	37'-1"	
a1(E)	1152	#5	31'-1"	
a2(E)	1470	#6	8'-4"	
a3(E)	10	#6	2'-6"	
a4(E)	16	#5	1'-6"	
b(E)	296	#5	28'-0"	
b1(E)	280	#5	32'-7"	
b2(E)	444	#8	34'-0"	
b3(E)	420	#8	30'-0"	
b4(E)	74	#5	36'-7"	
b5(E)	140	#5	29'-3"	
b6(E)	144	#9	52'-0"	
b7(E)	124	#7	52'-0"	
b8(E)	2	#5	2'-2"	
d(E)	470	#5	7'-0"	
d1(E)	940	#5	8'-3"	
d2(E)	6	#6	6'-3"	
d3(E)	6	#5	3'-4"	
d4(E)	470	#5	7'-0"	
e(E)	160	#4	16'-5"	
e1(E)	48	#4	11'-4"	
e2(E)	48	#4	29'-5"	
e3(E)	48	#4	14'-9"	
e4(E)	12	#4	32'-2"	
e5(E)	100	#4	15'-0"	
e6(E)	4	#4	30'-4"	
e7(E)	8	#4	24'-1"	
e8(E)	7	#6	8'-11"	
e9(E)	4	#4	2'-2"	
m(E)	14	#6	37'-1"	
m1(E)	28	#6	8'-2"	
m2(E)	4	#4	37'-1"	
m3(E)	36	#5	4'-0"	
m4(E)	14	#6	31'-1"	
m5(E)	56	#6	6'-5"	
m6(E)	4	#4	31'-1"	
m7(E)	16	#6	2'-7"	
m8(E)	8	#6	2'-2"	
m9(E)	8	#6	3'-11"	
m10(E)	4	#6	3'-1"	
m11(E)	4	#6	4'-10"	
m12(E)	28	#6	4'-3"	
m13(E)	112	#6	6'-5"	
m14(E)	4	#6	1'-1"	
m15(E)	16	#6	2'-2"	
m16(E)	36	#5	4'-0"	
m17(E)	4	#6	2'-10"	
m18(E)	16	#6	3'-11"	
s(E)	112	#5	8'-10"	
s1(E)	112	#5	11'-8"	
s2(E)	72	#5	8'-8"	
s3(E)	64	#5	9'-0"	
s4(E)	96	#5	14'-6"	
u(E)	148	#4	6'-0"	
Concrete Superstructure			Cu Yd	805.6
Protective Coat			Sq Yd	2,601
Reinforcement Bars, Epoxy Coated			Pound	268,450
Preformed Joint Seal 3 1/2"			Foot	316
Bridge Deck Grooving (Longitudinal)			Sq Yd	1,669
Diamond Grinding (Bridge Section)			Sq Yd	2,156

MODEL: Default
FILE NAME: pw://transystems-pw.bentley.com:transyscorp-pw1-hosted/Documents/Projects_2018/CH401/401180022/01-Stantec/CAD/ML-04_62R28/04-Sheets/04-Structures/0998312_0998313-ML-04-040-WB Deck Sections, Bar Diagrams & BOM.dgn

10/9/2023 3:26:15 PM

HBM ENGINEERING GROUP, LLC

USER NAME =	DESIGNED - JMI, JJS	REVISED -
	CHECKED - MI	REVISED -
PLOT SCALE =	DRAWN - JMI	REVISED -
PLOT DATE =	CHECKED - MI	REVISED -

STATE OF ILLINOIS
DEPARTMENT OF TRANSPORTATION

WB DECK SECTIONS, BAR DIAGRAMS, & BILL OF MATERIAL
STRUCTURE NOS. 099-8312 (EB) & 099-8313 (WB)

SHEET SA-41 OF SA-98 SHEETS

F.A.I. RTE.	SECTION	COUNTY	TOTAL SHEETS	SHEET NO.
I-80	FAI 80 21 STRUCTURE 7	WILL	1059	574
		CONTRACT NO. 62R28		
		ILLINOIS	FED. AID PROJECT	

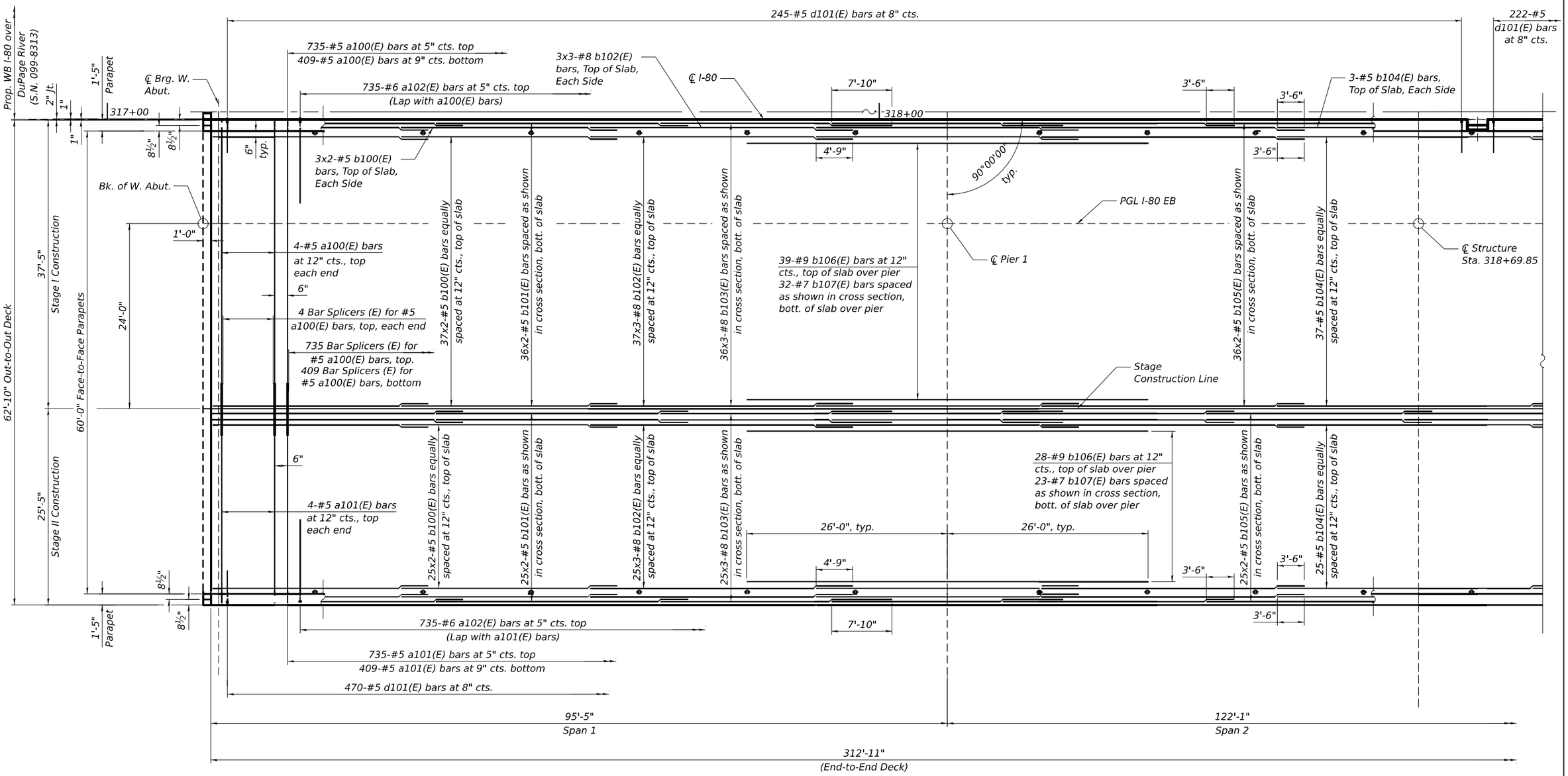

PLAN

(Symmetrical About ℄ Structure)

N

NOTES:

1. Bars indicated thus 37 x 2 - #5 etc. indicates 37 lines of bars with 2 lengths per line.
2. For deck cross section, see Sheet SA-43.
3. For parapet elevations and reinforcement, see Sheet SA-44.
4. For abutment diaphragm elevations and Section A-A, see Sheet SA-45.
5. For pier diaphragm details, see Sheet SA-46.
6. For deck details, bar diagrams, minimum bar laps and Bill of Material, see Sheet SA-47.
7. For bar splicer details, see Sheet SA-88.

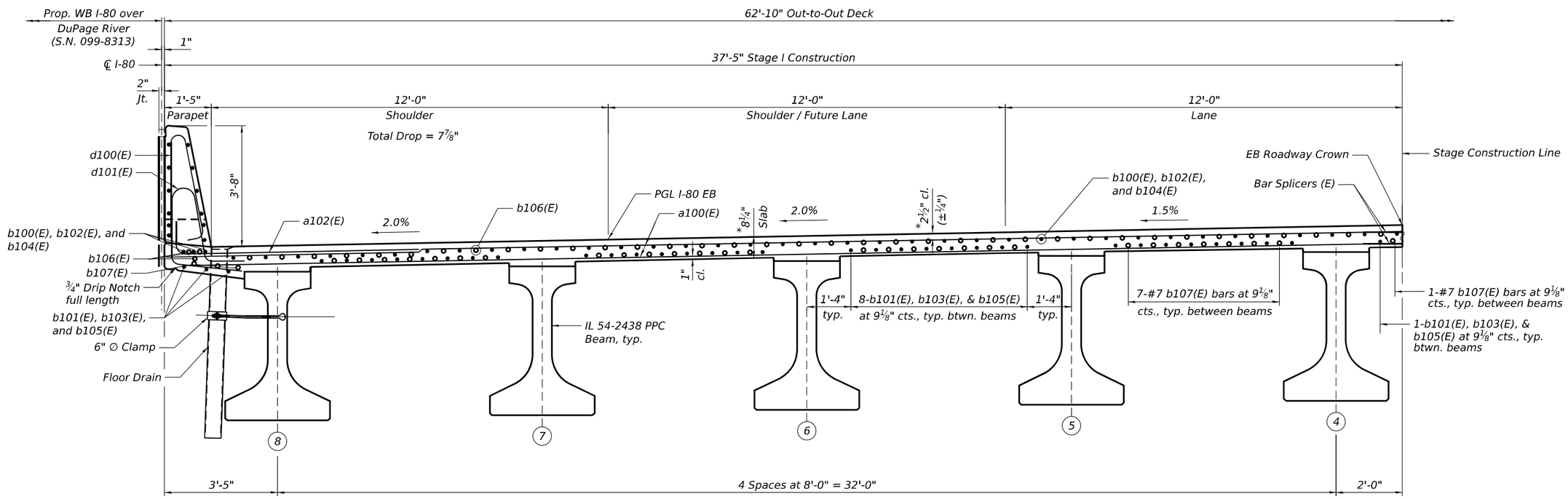

TYPICAL CROSS SECTION (NEAR PIER)

(Looking East)

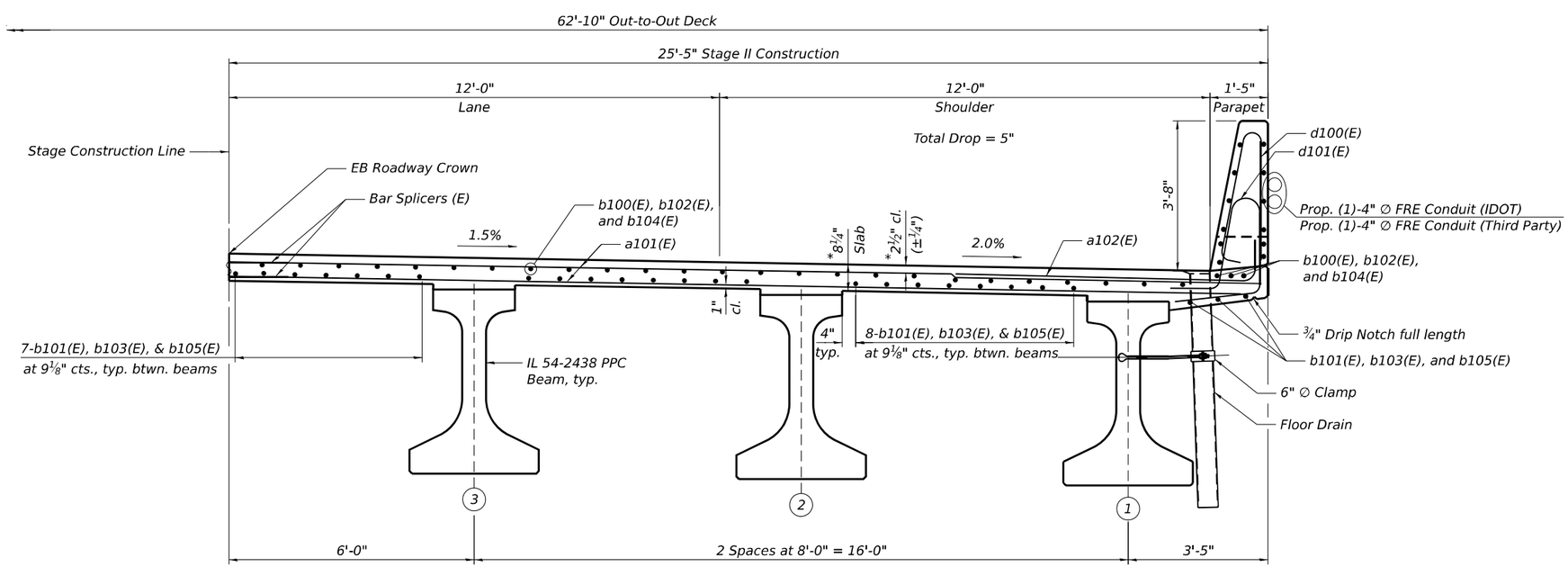

TYPICAL CROSS SECTION (NEAR MIDSPAN)

(Looking East)

NOTES:

1. For Notes, see Sheet SA-42.

*Prior to grinding

MODEL: Default
FILE NAME: pw://transystems-pw.bentley.com:transyscorp-pw1-hosted/Documents/Projects_2018/CH401/401180022/01-Stantec/CAD/MI-04_62R28/04-Sheets/04-Structures/0998312_0998313-MI-04-042-EB Deck Cross Section.dgn

HBM ENGINEERING GROUP, LLC

USER NAME =	DESIGNED - JMI, JJS	REVISED -	
	CHECKED - MI	REVISED -	
PLOT SCALE =	DRAWN - JMI	REVISED -	
PLOT DATE =	CHECKED - MI	REVISED -	

STATE OF ILLINOIS
DEPARTMENT OF TRANSPORTATION

EB DECK CROSS SECTION
STRUCTURE NOS. 099-8312 (EB) & 099-8313 (WB)

SHEET SA-43 OF SA-98 SHEETS

F.A.I. RTE.	SECTION	COUNTY	TOTAL SHEETS	SHEET NO.
I-80	FAI 80 21 STRUCTURE 7	WILL	1059	576
		CONTRACT NO. 62R28		
	ILLINOIS	FED. AID PROJECT		

10/9/2023 3:26:20 PM

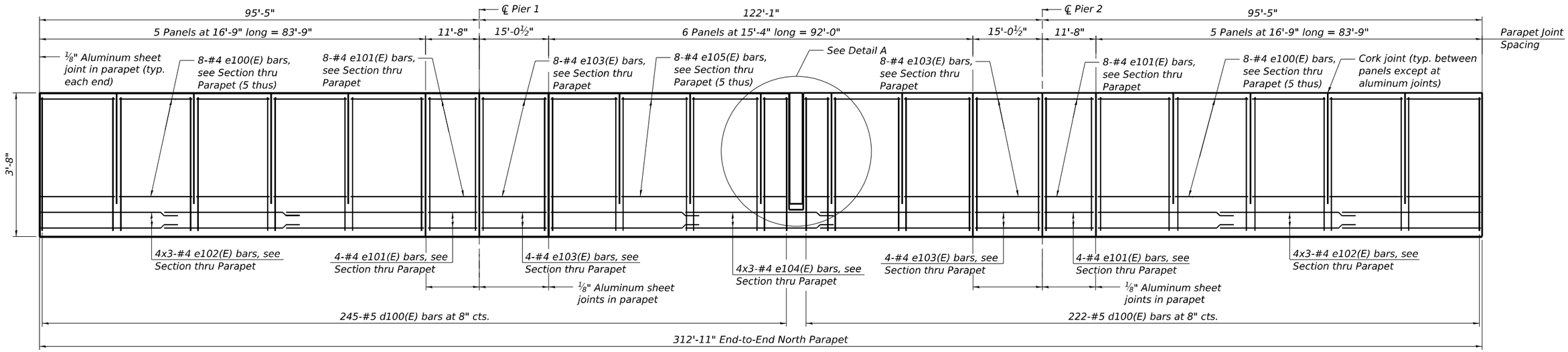

INSIDE ELEVATION OF NORTH PARAPET

(Looking North)

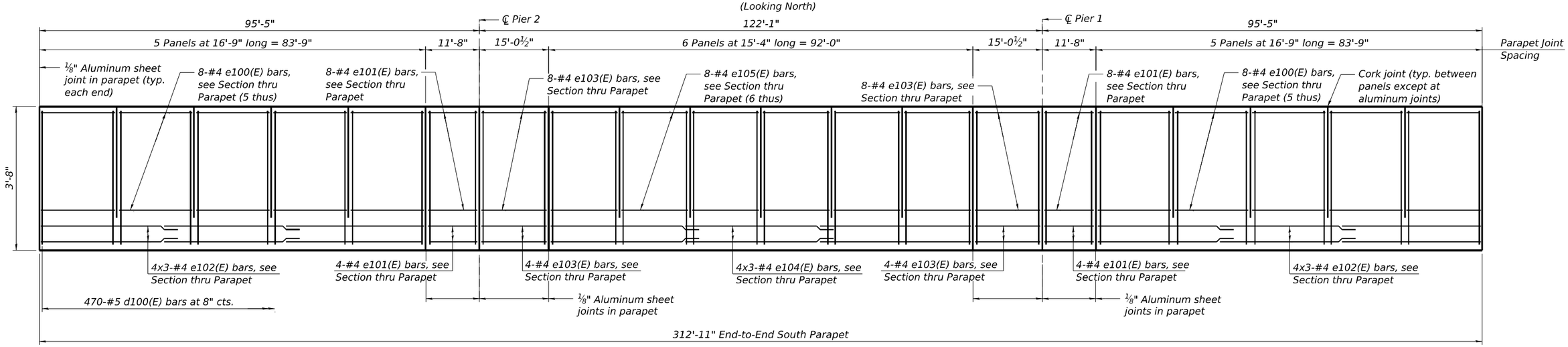

INSIDE ELEVATION OF SOUTH PARAPET

(Looking South)

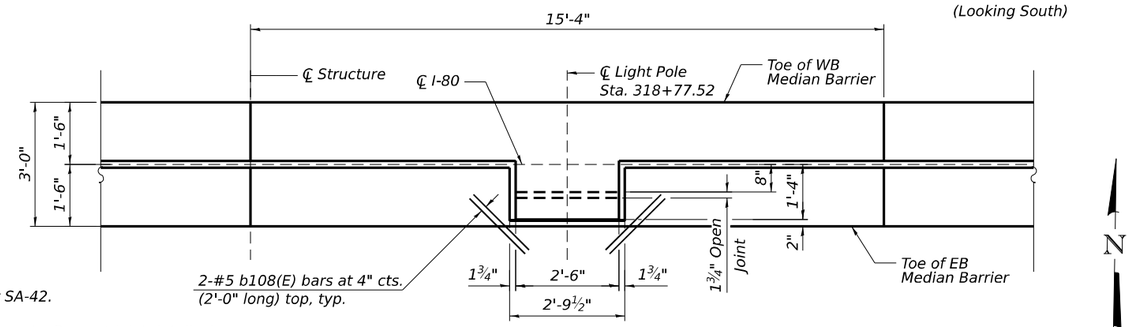

BOTTOM PLAN

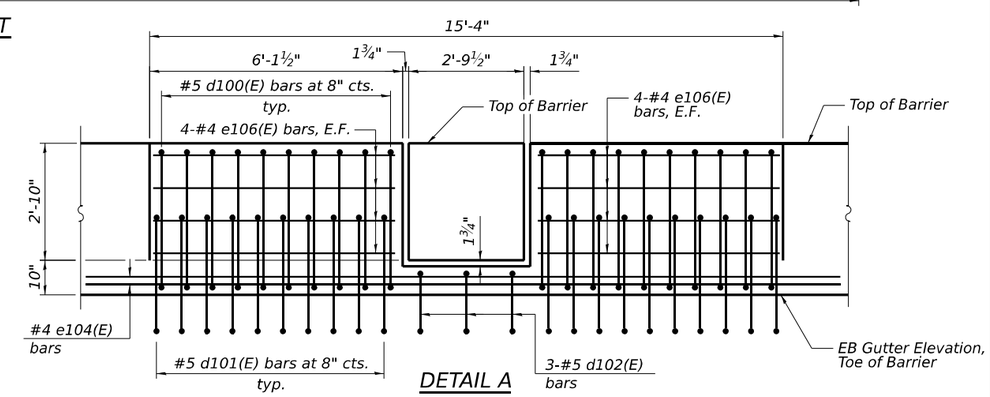

DETAIL A

N

NOTES:

1. For notes, see Sheet SA-42.
2. For Sections thru Parapets, Parapet joint details, bar diagrams and Bill of Material, see Sheet SA-47.

MODEL: Default
FILE NAME: pw://transystems-pw.bentley.com:transyscorp-pw1-hosted/Documents/Projects_2018/CH401/401180022/01-Stantec/CAD/ML-04_62R28/04-Sheets/04-Structures/0998312_0998313-ML-04-043-EB Parapet Elevations.dgn

10/9/2023 3:26:22 PM

HBM ENGINEERING GROUP, LLC

USER NAME =	DESIGNED - JMI, JJS	REVISED -	
	CHECKED - MI	REVISED -	
PLOT SCALE =	DRAWN - JMI	REVISED -	
PLOT DATE =	CHECKED - MI	REVISED -	

STATE OF ILLINOIS
DEPARTMENT OF TRANSPORTATION

EB PARAPET ELEVATIONS
STRUCTURE NOS. 099-8312 (EB) & 099-8313 (WB)

SHEET SA-44 OF SA-98 SHEETS

F.A.I. RTE.	SECTION	COUNTY	TOTAL SHEETS	SHEET NO.
I-80	FAI 80 21 STRUCTURE 7	WILL	1059	577
		CONTRACT NO. 62R28		
		ILLINOIS	FED. AID PROJECT	

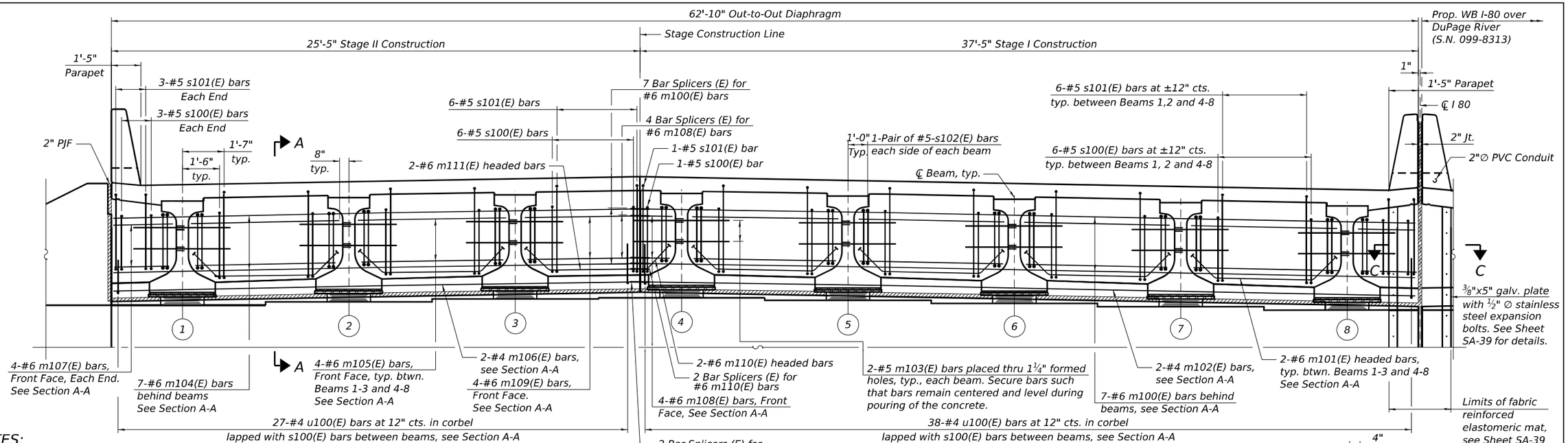

DIAPHRAGM AT ABUTMENT

(West Abutment shown, East Abutment similar opposite hand)
(Side retainers at each side of bearing not shown for clarity)

NOTES:

1. For Superstructure details, bar diagrams and Bill of Materials, see Sheet SA-47.
2. Reinforcement bars in diaphragms are billed with the superstructure on Sheet SA-47.
3. Concrete in diaphragm is included with Concrete Superstructure on Sheet SA-47.
4. The approach slab seat shall have a constant slope determined from the control points shown.
5. For bearing details, see Sheet SA-70.
6. Cost of fabric reinforced elastomeric mat, galvanized plate, stainless steel expansion bolts with nuts and washers, and installation are included in the cost of Concrete Superstructure.
7. For Section C-C, see Sheet SA-39.

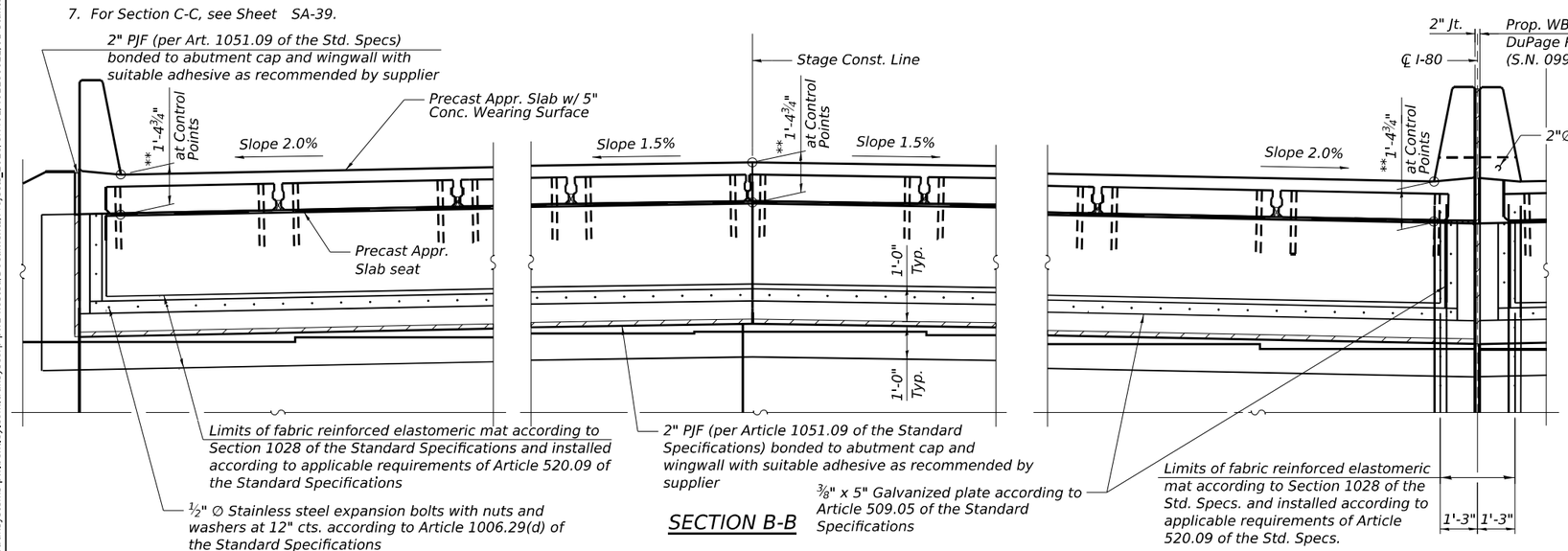

SECTION B-B

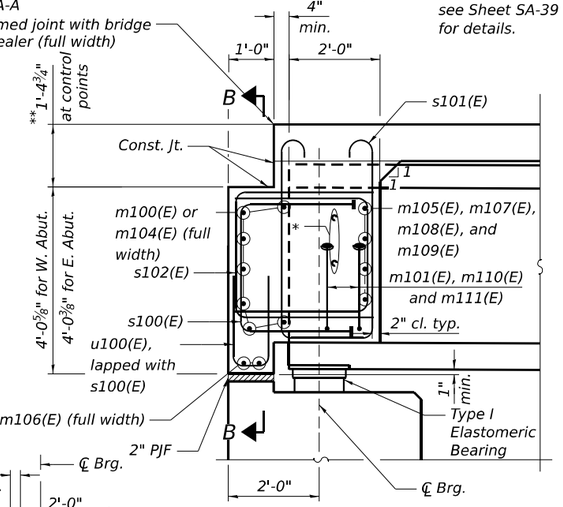

SECTION A-A

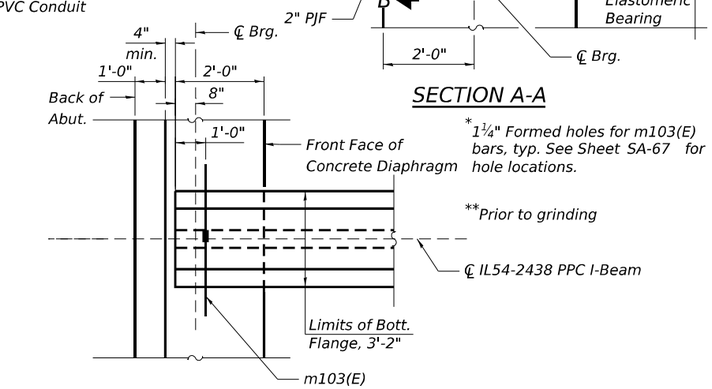

PARTIAL PLAN AT ABUTMENT

(Showing bottom flange of beam)

USER NAME =	DESIGNED - JMI, JJS	REVISED -	
	CHECKED - MI	REVISED -	
PLOT SCALE =	DRAWN - JMI	REVISED -	
PLOT DATE =	CHECKED - MI	REVISED -	

HBM ENGINEERING GROUP, LLC

STATE OF ILLINOIS
DEPARTMENT OF TRANSPORTATION

EB W. AND E. ABUTMENT DIAPHRAGM DETAILS
STRUCTURE NOS. 099-8312 (EB) & 099-8313 (WB)

SHEET SA-45 OF SA-98 SHEETS

F.A.I. RTE.	SECTION	COUNTY	TOTAL SHEETS	SHEET NO.
I-80	FAI 80 21 STRUCTURE 7	WILL	1059	578
		CONTRACT NO. 62R28		
		ILLINOIS	FED. AID PROJECT	

MODEL: Default
FILE NAME: pw://transystems-pw.bentley.com:transyscorp-pw1-hosted/Documents/Projects_2018/CH401/401180022/01-Stantec/CAD/ML-04_62R28/04-Sheets/04-Structures/0998312_0998313-ML-04-044-EB W. and E. Abutment Diaphragm Details.dgn
10/9/2023 3:26:26 PM

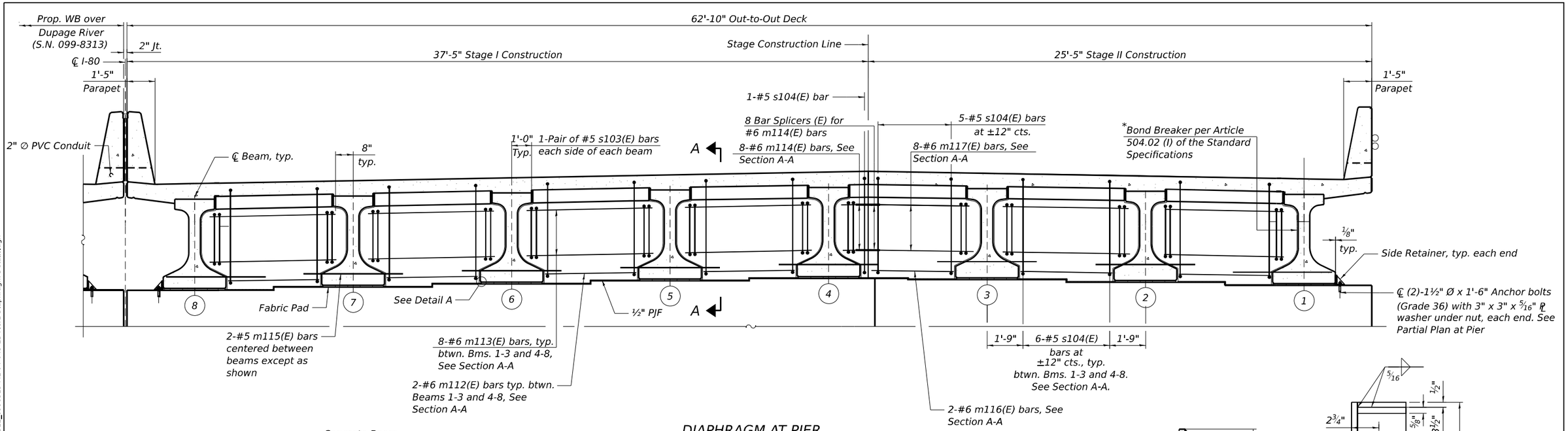

DIAPHRAGM AT PIER

*Bonded to sides of beams embedded into diaphragm.
(Pier 1 shown, Pier 2 similar)
(Looking East)

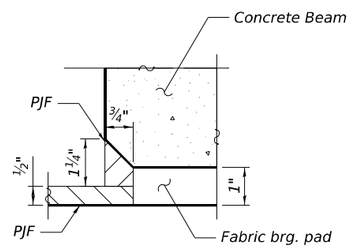

DETAIL A

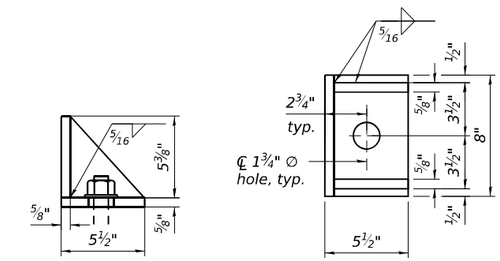

SIDE RETAINER

(2 required each side of pier)
Equivalent rolled angle with stiffeners will be allowed in lieu of welded plates.
(Total 8 Required)

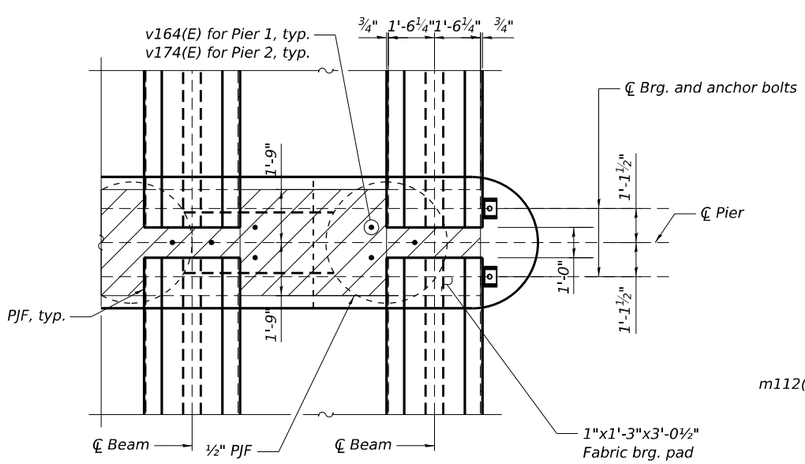

PARTIAL PLAN AT PIER

(Showing bearing pads and PJF details)

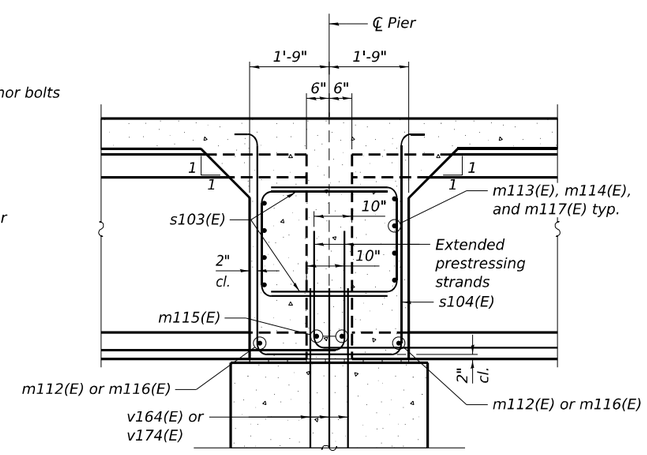

SECTION A-A

NOTES:

1. For superstructure details, bar diagrams, and Bill of Material, see Sheet SA-47.
2. Reinforcement bars in diaphragm are billed with the superstructure on Sheet SA-47.
3. Concrete in diaphragm is included with Concrete Superstructure on Sheet SA-47.
4. The side retainers shall be galvanized after shop fabrication according to AASHTO M 111 and ASTM 385.
5. Cost of side retainer and anchor bolts at piers shall be included with Concrete Structures.
6. Anchor bolts and side retainers shall be according to Article 521.06 of the Standard Specifications. Side retainers shall be hot dip galvanized.
7. Cost of fabric bearing pad is included with Furnishing and Erecting Precast Prestressed Concrete Beams, IL54N.
8. Anchor bolts and side retainers shall be installed as each exterior beam is erected unless an equivalent temporary means of lateral restraint is used.
9. For v164(E) and v174(E) bars, see Sheets SA-84 and SA-86 , respectively.
10. For Detail of bar s103(E), see Sheet SA-47.
11. For Bar Splicer details, see Sheet SA-88.

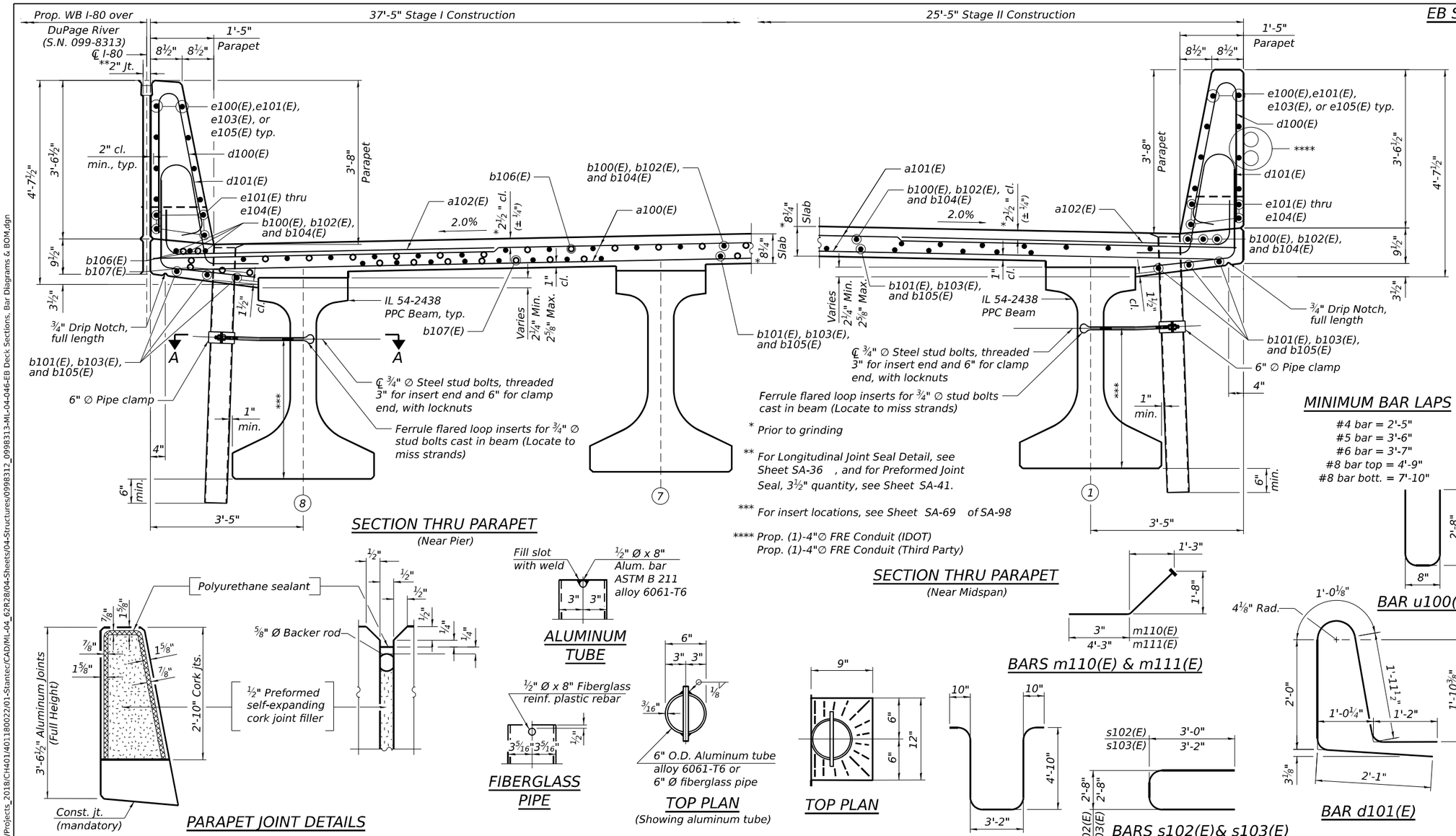

* Prior to grinding

** For Longitudinal Joint Seal Detail, see Sheet SA-36 , and for Preformed Joint Seal, 3½" quantity, see Sheet SA-41.

*** For insert locations, see Sheet SA-69 of SA-98

**** Prop. (1)-4"∅ FRE Conduit (IDOT)
Prop. (1)-4"∅ FRE Conduit (Third Party)

SECTION THRU PARAPET
(Near Pier)

SECTION THRU PARAPET
(Near Midspan)

EB SUPERSTRUCTURE BILL OF MATERIAL

Bar	No.	Size	Length	Shape
a100(E)	1152	#5	37'-1"	
a101(E)	1152	#5	25'-1"	
a102(E)	1470	#6	8'-4"	
b100(E)	272	#5	28'-0"	
b101(E)	244	#5	32'-7"	
b102(E)	408	#8	34'-0"	
b103(E)	366	#8	30'-0"	
b104(E)	68	#5	36'-7"	
b105(E)	122	#5	29'-3"	
b106(E)	134	#9	52'-0"	
b107(E)	110	#7	52'-0"	
b108(E)	4	#5	2'-0"	
d100(E)	937	#5	7'-0"	
d101(E)	937	#5	8'-3"	
d102(E)	3	#5	1'-10"	
e100(E)	160	#4	16'-5"	
e101(E)	48	#4	11'-4"	
e102(E)	48	#4	29'-5"	
e103(E)	48	#4	14'-9"	
e104(E)	24	#4	32'-2"	
e105(E)	88	#4	15'-0"	
e106(E)	16	#4	5'-10"	
m100(E)	14	#6	37'-1"	
m101(E)	24	#6	8'-8"	
m102(E)	4	#4	37'-1"	
m103(E)	32	#5	4'-0"	
m104(E)	14	#6	25'-1"	
m105(E)	48	#6	6'-8"	
m106(E)	4	#4	25'-1"	
m107(E)	16	#6	2'-7"	
m108(E)	8	#6	1'-2"	
m109(E)	8	#6	5'-2"	
m110(E)	4	#6	2'-4"	
m111(E)	4	#6	6'-4"	
m112(E)	24	#6	4'-6"	
m113(E)	96	#6	6'-8"	
m114(E)	16	#6	1'-2"	
m115(E)	32	#5	4'-0"	
m116(E)	4	#6	4'-1"	
m117(E)	16	#6	5'-2"	
s100(E)	98	#5	8'-10"	
s101(E)	98	#5	11'-8"	
s102(E)	64	#5	8'-8"	
s103(E)	56	#5	9'-0"	
s104(E)	84	#5	14'-6"	
u100(E)	130	#4	6'-0"	
Concrete Superstructure			Cu Yd	743.5
Protective Coat			Sq Yd	2393
Reinforcement Bars, Epoxy Coated			Pound	246,320
Bridge Deck Grooving (Longitudinal)			Sq Yd	1,252
Diamond Grinding (Bridge Section)			Sq Yd	1,948

MINIMUM BAR LAPS

#4 bar = 2'-5"
#5 bar = 3'-6"
#6 bar = 3'-7"
#8 bar top = 4'-9"
#8 bar bott. = 7'-10"

PARAPET JOINT DETAILS

ALUMINUM TUBE

FIBERGLASS PIPE

TOP PLAN
(Showing aluminum tube)

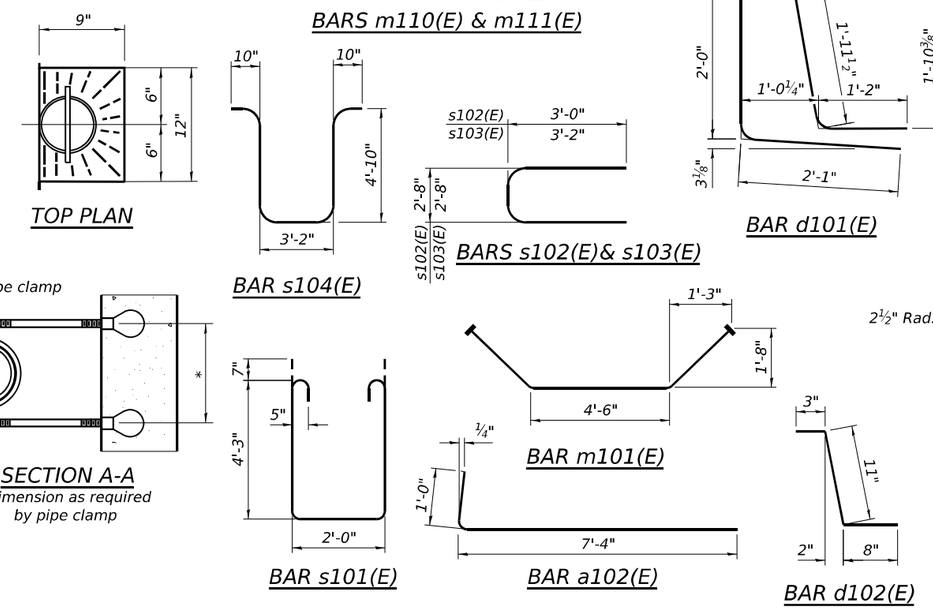

NOTES:

1. Protective coat shall be applied to the top and inside faces of north and south parapets and to the top of deck.
2. Fiberglass pipe shall conform to ASTM D2996, with short-time rupture strength hoop tensile stress of 30,000 p.s.i minimum.
3. The exterior surfaces of the fiberglass floor drains shall be pigmented by the manufacturer with a color that matches the concrete.
4. The top portion of aluminum floor drains shall be coated to minimize reaction with wet concrete.
5. The clamping device and inserts shall be galvanized according to AASHTO M232. Cost of clamping device included with Floor Drains.
6. The ⅛" aluminum sheet shall be ASTM B 209 alloy 3003-H14 and coated to minimize reaction with wet concrete. Cost included with Concrete Superstructure.
7. The polyurethane sealant shall be according to Article 1050.04 of the Std. Spec. and the color shall be gray.
8. Headed bars shall conform to ASTM A970 with threaded attachment; Class HA; and reinforcement bars conforming to ASTM A706. Cost included with Reinforcement Bars, Epoxy Coated.

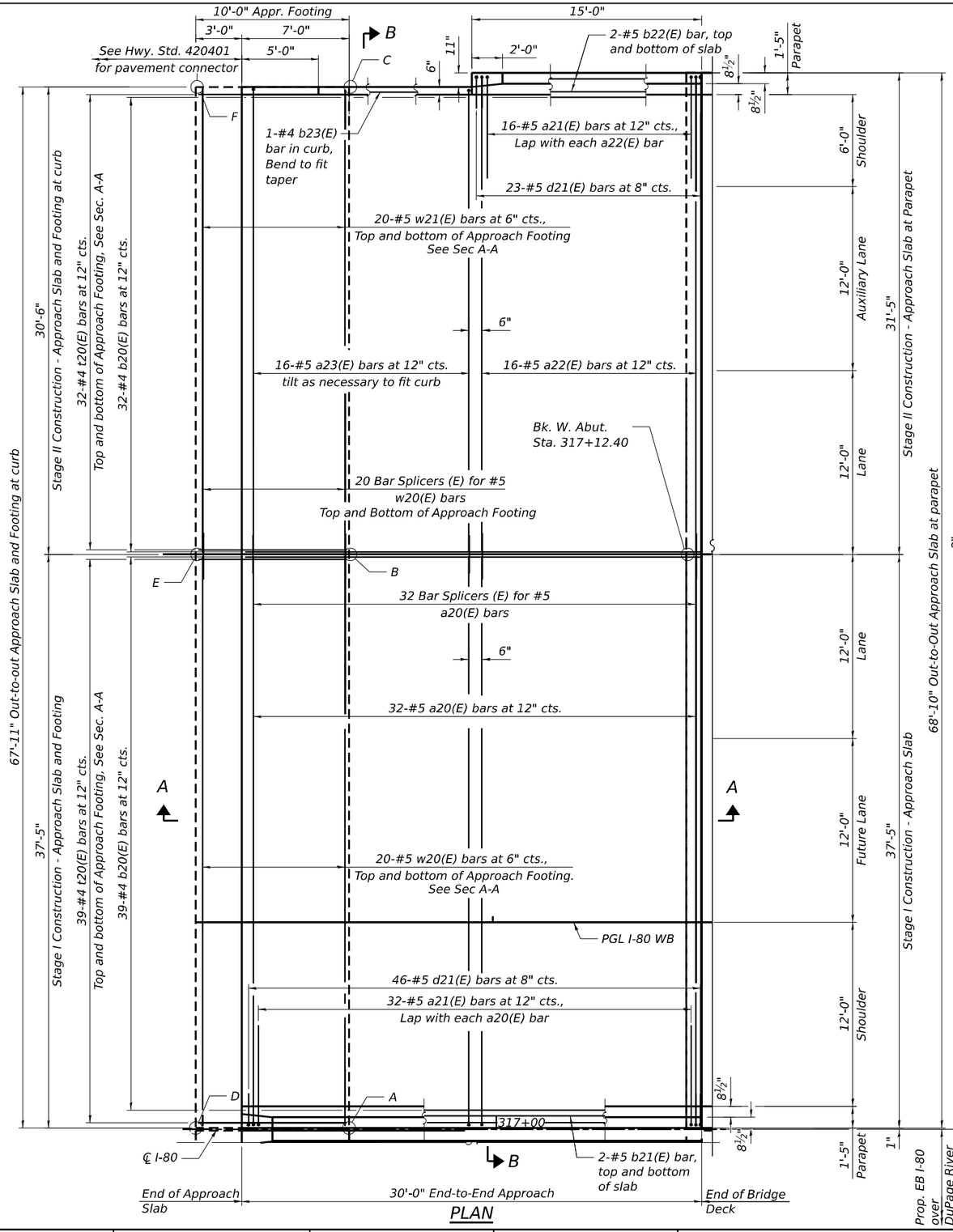

PLAN

TOP AND BOTTOM ELEVATIONS FOR WB WEST APPROACH FOOTING

West Approach		
Point / Location	Top	Bottom
A - SE	566.56	565.72
B - E. CL	567.22	566.38
C - NE	566.67	565.83
D - SW	566.60	565.77
E - W CL.	567.26	566.43
F - NW	566.71	565.88

NOTE:

1. For Sections A-A, B-B, Bill of Material and Detail A, see Sheet SA-50.

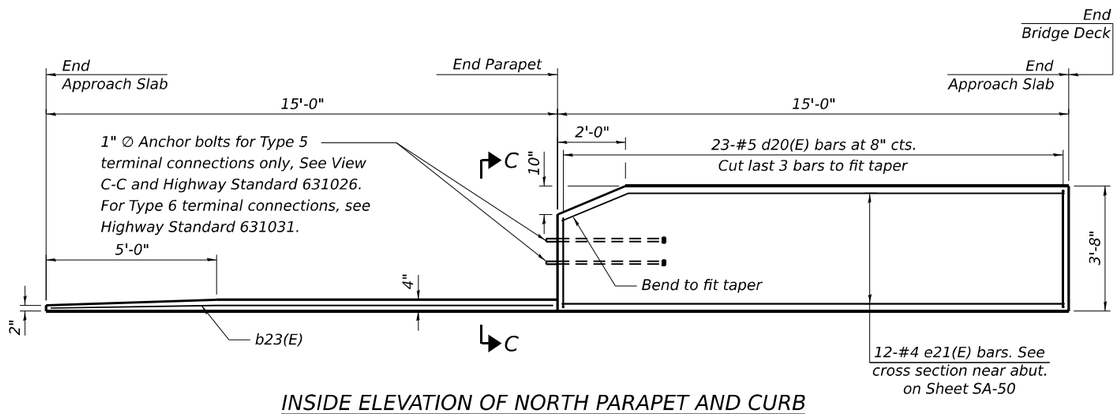

INSIDE ELEVATION OF NORTH PARAPET AND CURB

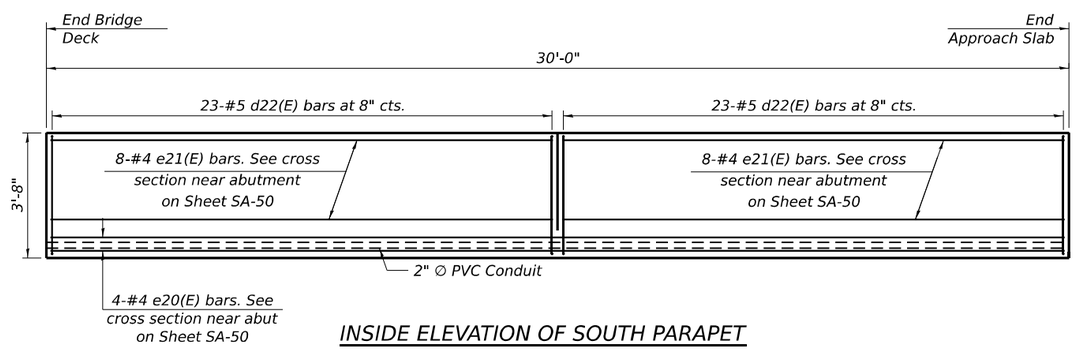

INSIDE ELEVATION OF SOUTH PARAPET

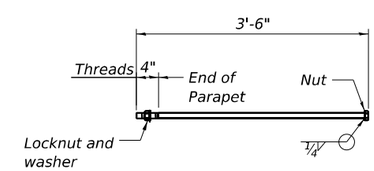

1" ∅ ANCHOR BOLT

(Anchor bolt assemblies shall be galvanized according to Article 1006.09 of the Standard Specifications. Cost of anchor bolt assemblies included with Concrete Superstructure.)

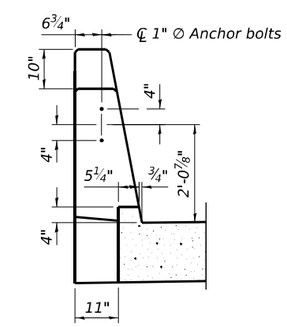

VIEW C-C

MODEL: Default
FILE NAME: pw://transystems-pw.bentley.com:transyscorp-pw1-hosted/Documents/Projects_2018/CH401/401180022/01-Stantec/CAD/ML-04_62R28/04-Sheets/04-Structures/0998312_0998313-ML-04-047-WB W. Precast Approach Slab Plan.dgn
10/9/2023 3:26:37 PM

HBM ENGINEERING GROUP, LLC

USER NAME =	DESIGNED - EN	REVISED -
	CHECKED - MI, JJS	REVISED -
PLOT SCALE =	DRAWN - EN	REVISED -
PLOT DATE =	CHECKED - MI, JJS	REVISED -

STATE OF ILLINOIS
DEPARTMENT OF TRANSPORTATION

WB W. PRECAST APPROACH SLAB PLAN
STRUCTURE NOS. 099-8312 (EB) & 099-8313 (WB)

SHEET SA-48 OF SA-98 SHEETS

F.A.I. RTE.	SECTION	COUNTY	TOTAL SHEETS	SHEET NO.
I-80	FAI 80 21 STRUCTURE 7	WILL	1059	581
		CONTRACT NO. 62R28		
	ILLINOIS	FED. AID PROJECT		

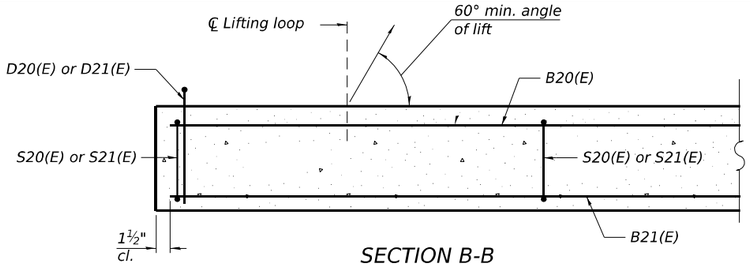

SECTION B-B

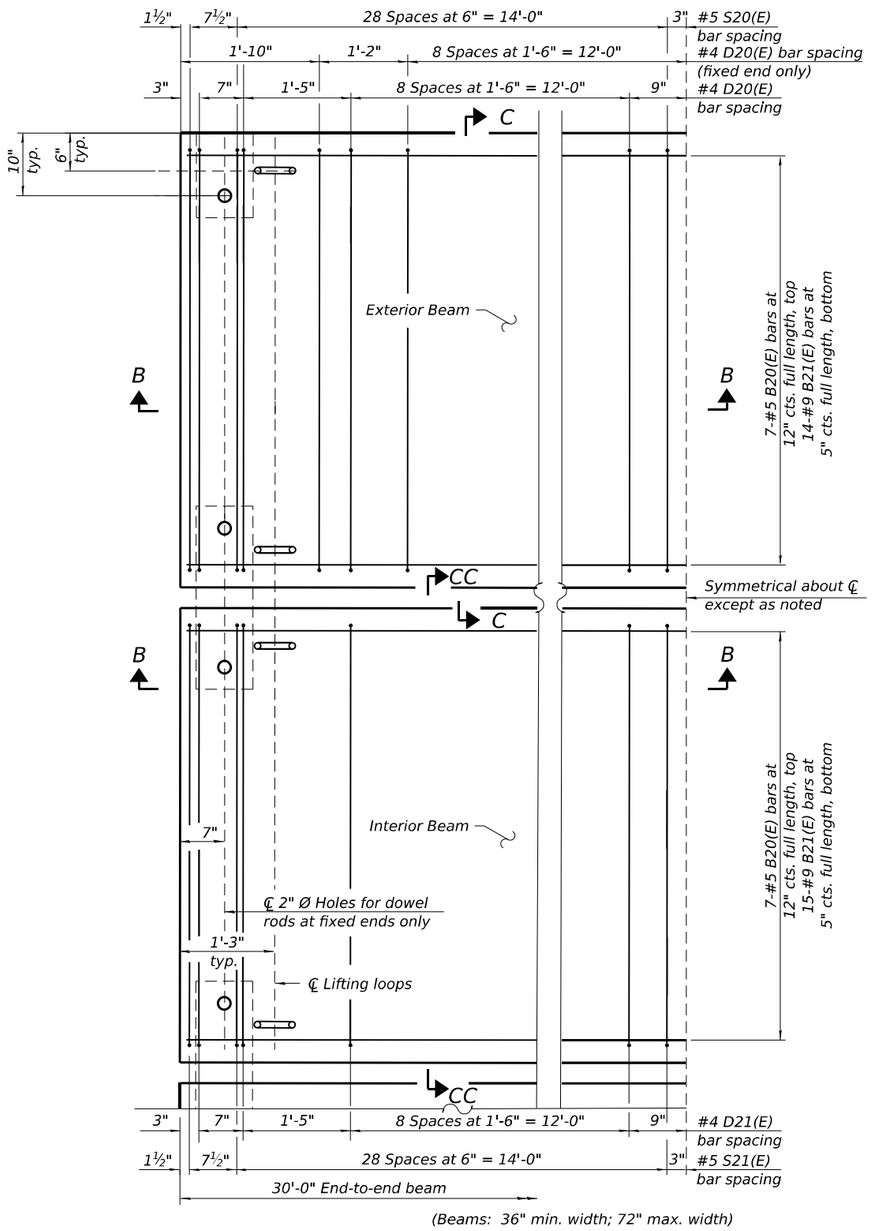

(Beams: 36" min. width; 72" max. width)

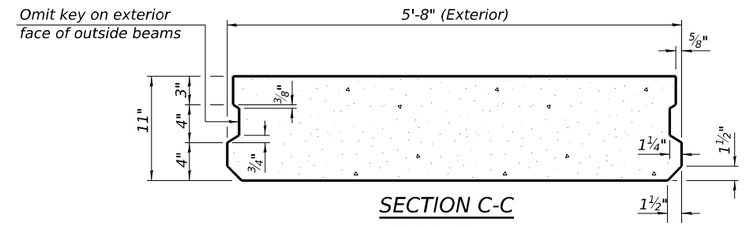

SECTION C-C

(Exterior Beam)
(Showing Dimensions)

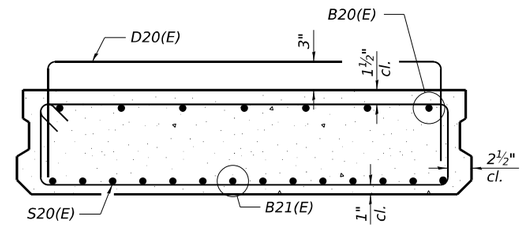

SECTION C-C

(Exterior Beam)
(Showing Reinforcement)

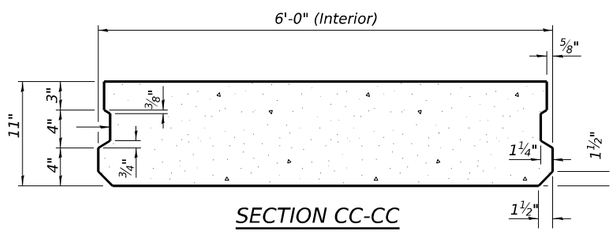

SECTION CC-CC

(Interior Beam)
(Showing Dimensions)

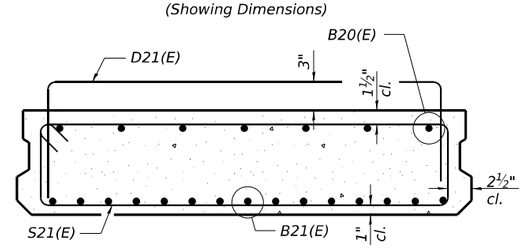

SECTION CC-CC

(Interior Beam)
(Showing Reinforcement)

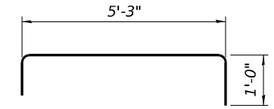

BAR D20(E)

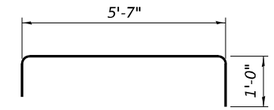

BAR D21(E)

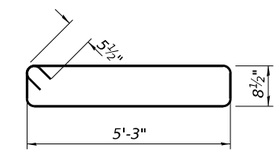

BAR S20(E)

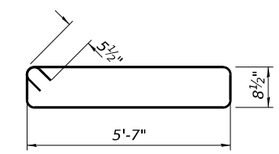

BAR S21(E)

NOTES:

1. The precast bridge approach slab shall be according to Section 504 of the Standard Specifications and shall be paid for at the contract unit price per square foot for Precast Bridge Approach Slab.
2. Cast-in-place substitution of Precast Bridge Approach Slab is not allowed.
3. The top surface of precast bridge approach slabs shall be finished similar to precast prestressed deck beams with concrete wearing surface as specified in the IDOT "Manual for Fabrication of Precast Prestressed Concrete Products."
4. Two ⅛" fabric adjusting shims of the dimensions of the exterior bearing pad shall be provided for each bearing pad location. Cost included with Precast Bridge Approach Slab.
5. A minimum 2 ½" Ø lifting pins shall be used to engage the lifting loops during handling.
6. Compressive strength of precast concrete, f'c shall be 6,000 psi.
7. Compressive strength of precast concrete during initial lifting, f'ci shall be 5,000 psi.

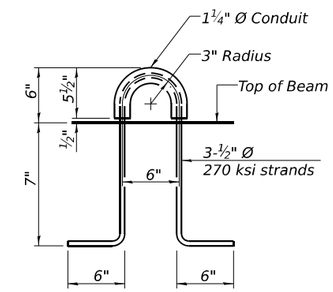

LIFTING LOOP DETAIL

(An alternate lifting loop with a proof load of 25,000 lbs. and utilized according to the manufacturer's recommendations may be used)

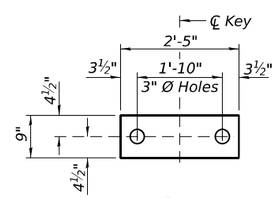

INTERIOR

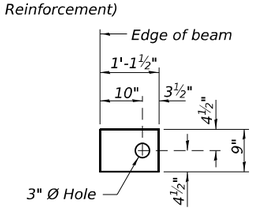

EXTERIOR

FABRIC BEARING PAD

Notes:
Bearing pads at fixed end shall be ½" thick and bearing pads at expansion ends shall be ¾" thick.

Omit holes for fabric bearing pads at approach slab footing end of beams.

BAR LIST
EACH INTERIOR BEAM

(For information only)

Bar	No.	Size	Length	Shape
B20(E)	7	#5	29'-8"	—
B21(E)	15	#9	29'-8"	—
D21(E)	22	#4	7'-7"	⊓
S21(E)	60	#5	13'-6"	▭

BAR LIST
EACH EXTERIOR BEAM

(For information only)

Bar	No.	Size	Length	Shape
B20(E)	7	#5	29'-8"	—
B21(E)	14	#9	29'-8"	—
D20(E)	32	#4	7'-3"	⊓
S20(E)	60	#5	12'-10"	▭

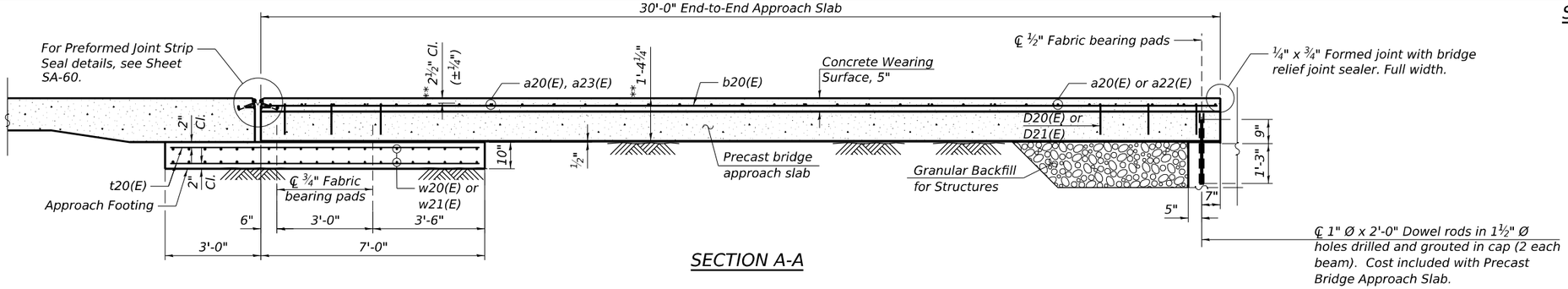

SECTION A-A

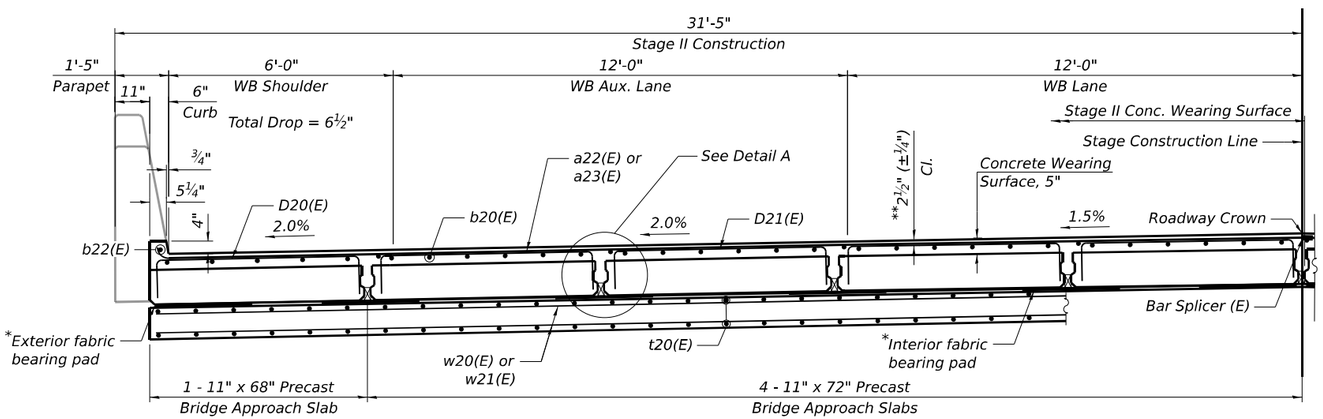

AT APPROACH FOOTING

SECTION B-B - STAGE II CONSTRUCTION

(Looking Upstation)

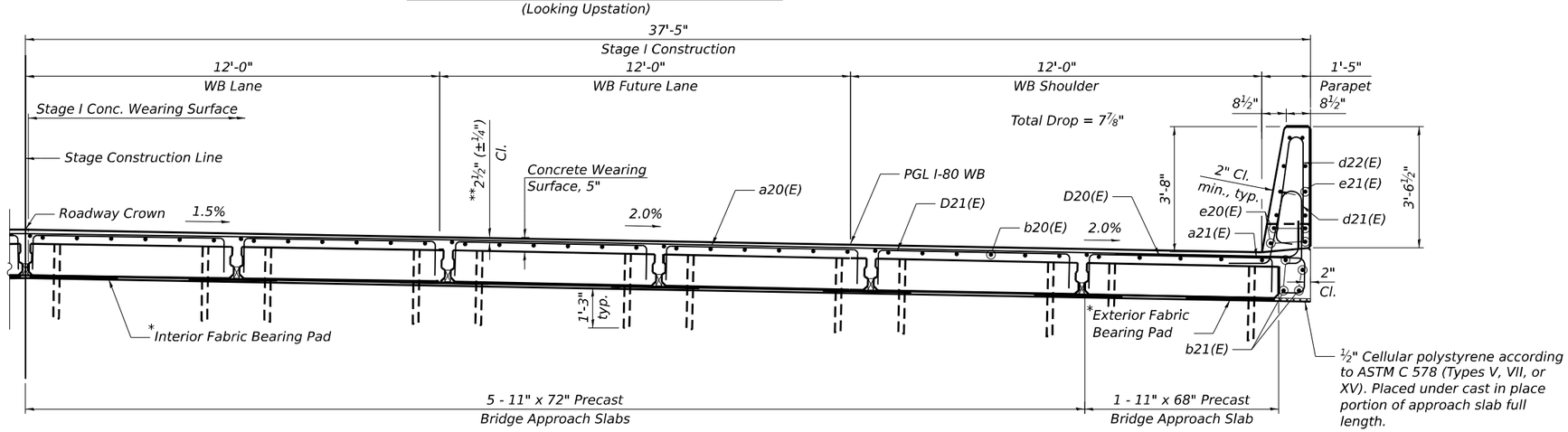

NEAR ABUTMENT

SECTION B-B - STAGE I CONSTRUCTION

(Looking Upstation)
(Footing not shown for clarity)

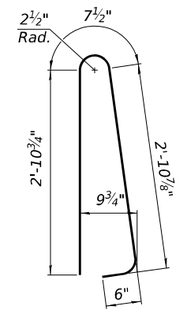

BAR d20(E)

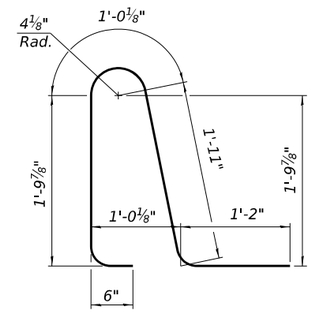

BAR d21(E)

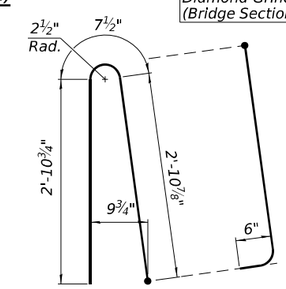

BAR d22(E)

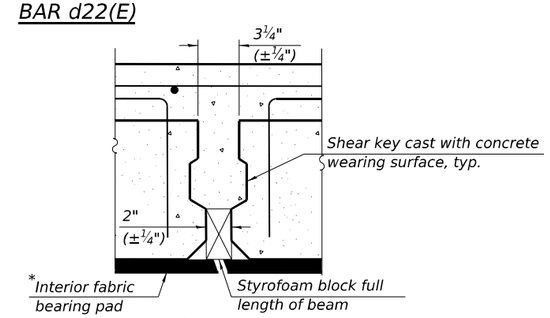

DETAIL A

*Fabric bearing pads at the expansion end shall be recessed ¼" into the approach footing and bonded. Adjusting shims, when required, shall be bonded to the top of the fabric bearing pads.

**Prior to grinding

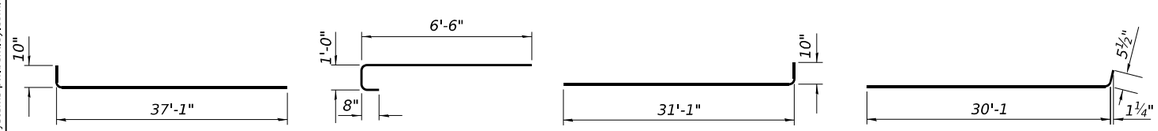

BAR a20(E) BAR a21(E) BAR a22(E) BAR a23(E)

S.N. 099-8313 (WB) WEST APPROACH SLAB BILL OF MATERIAL

Bar	No.	Size	Length	Shape
a20(E)	32	#5	37'-11"	
a21(E)	48	#5	8'-2"	
a22(E)	16	#5	31'-11"	
a23(E)	16	#5	30'-7"	
b20(E)	71	#4	29'-8"	
b21(E)	4	#5	29'-8"	
b22(E)	4	#5	14'-8"	
b23(E)	1	#4	14'-8"	
d20(E)	23	#5	7'-0"	
d21(E)	69	#5	6'-5"	
d22(E)	46	#5	7'-0"	
e20(E)	4	#4	29'-8"	
e21(E)	28	#4	14'-8"	
t20(E)	142	#4	9'-8"	
w20(E)	40	#5	37'-1"	
w21(E)	40	#5	30'-2"	
Concrete Structures		Cu Yd	21.0	
Concrete Superstructure		Cu Yd	6.3	
Protective Coat		Sq Yd	242	
Reinforcement Bars, Epoxy Coated		Pound	38,750	
Preformed Joint Seal 3 1/2"		Foot	30	
Bridge Deck Grooving (Longitudinal)		Sq Yd	160	
Concrete Wearing Surface, 5"		Sq Yd	240	
Precast Bridge Approach Slab		Sq Ft	2052	
Diamond Grinding (Bridge Section)		Sq Yd	207	

MODEL: Default
FILE NAME: pw://transystems-pw.bentley.com:transyscorp-pw1-hosted/Documents/Projects_2018/CH401/401180022/01-Stantec/CAD/ML-04_62R28/04-Sheets/04-Structures/0998312_0998313-ML-04-049-WB W. Precast Approach Slab Sections and Details.dgn

10/9/2023 3:26:43 PM

HBM ENGINEERING GROUP, LLC

USER NAME =	DESIGNED - EN	REVISED -
	CHECKED - MI, JJS	REVISED -
PLOT SCALE =	DRAWN - EN	REVISED -
PLOT DATE =	CHECKED - MI, JJS	REVISED -

STATE OF ILLINOIS
DEPARTMENT OF TRANSPORTATION

WB W. PRECAST APPROACH SLAB SECTIONS AND DETAILS
STRUCTURE NOS. 099-8312 (EB) & 099-8313 (WB)

SHEET SA-50 OF SA-98 SHEETS

F.A.I. RTE.	SECTION	COUNTY	TOTAL SHEETS	SHEET NO.
I-80	FAI 80 21 STRUCTURE 7	WILL	1059	583
		CONTRACT NO. 62R28		
		ILLINOIS	FED. AID PROJECT	

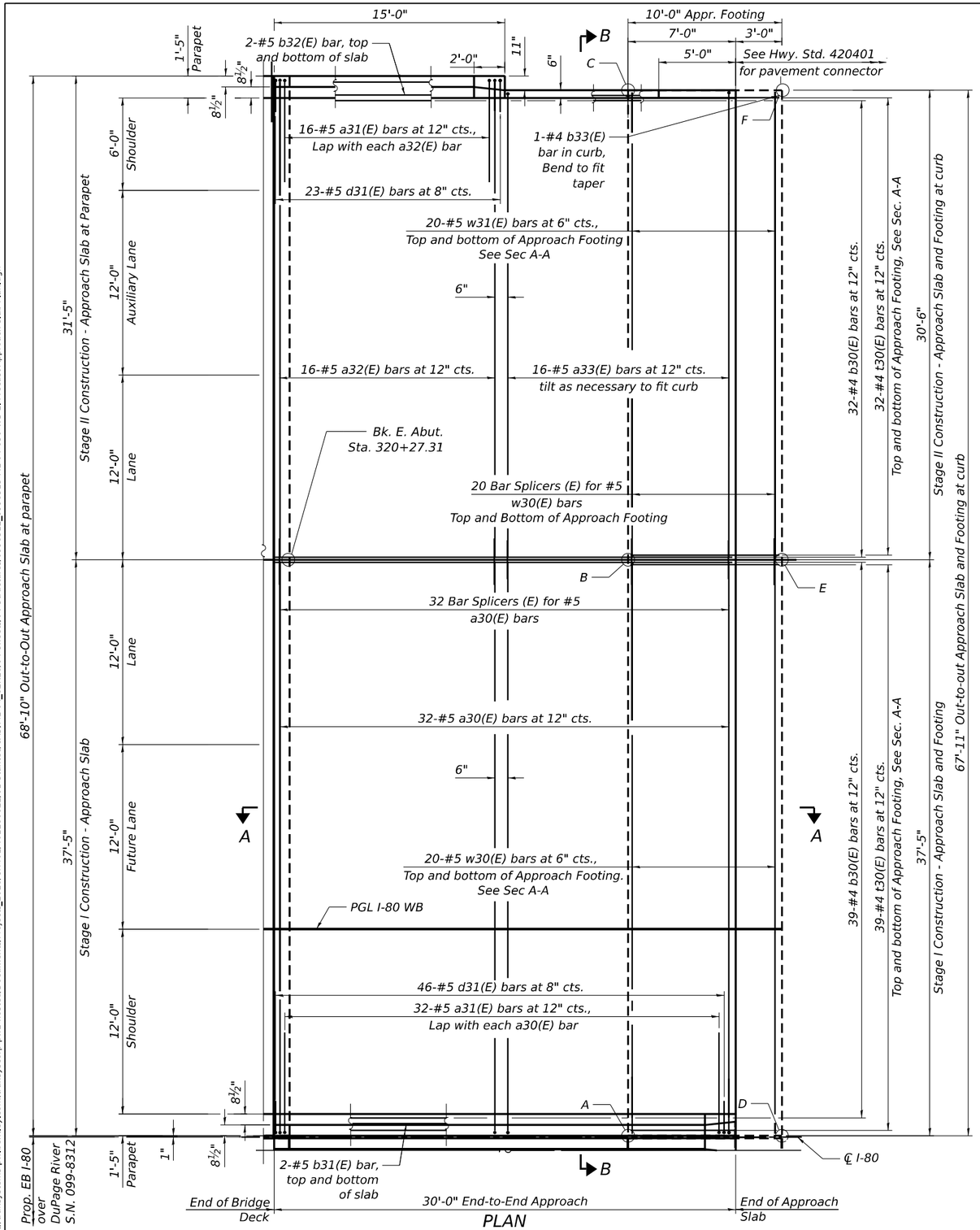

PLAN

TOP AND BOTTOM ELEVATIONS FOR WB EAST APPROACH FOOTING

East Approach		
Point / Location	Top	Bottom
A - SW	564.96	564.12
B - W CL	565.62	564.78
C - NW	565.07	564.23
D - SE	564.91	564.08
E - E CL	565.57	564.74
F - NE	565.02	564.19

NOTE:

1. For Sections A-A, B-B, Bill of Material and Detail A, see Sheet SA-53.

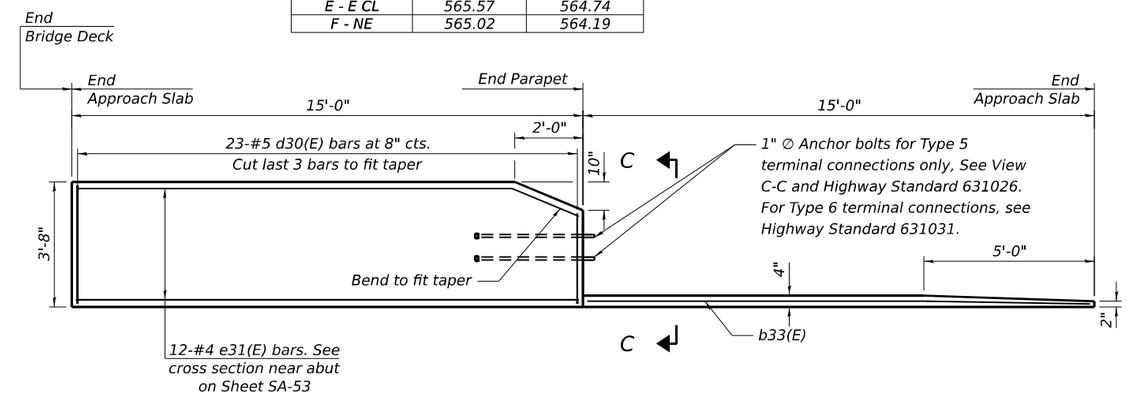

INSIDE ELEVATION OF NORTH PARAPET AND CURB

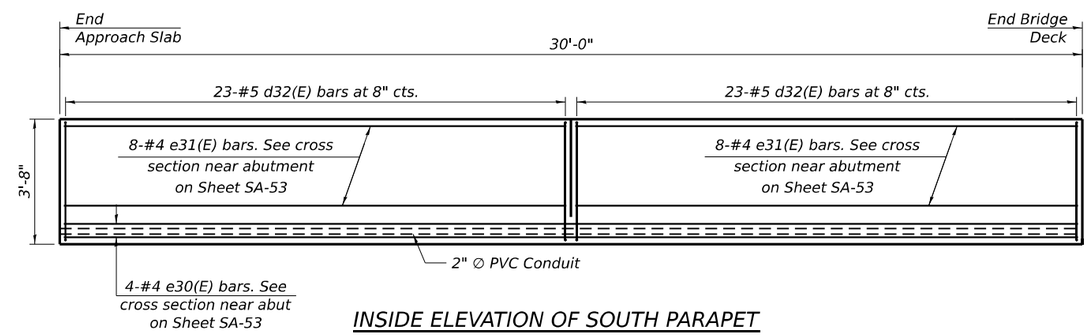

INSIDE ELEVATION OF SOUTH PARAPET

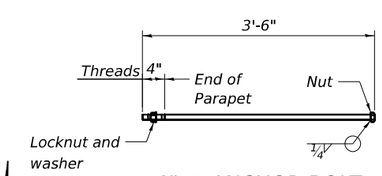

1" ∅ ANCHOR BOLT

(Anchor bolt assemblies shall be galvanized according to Article 1006.09 of the Standard Specifications. Cost of anchor bolt assemblies included with Concrete Superstructure.)

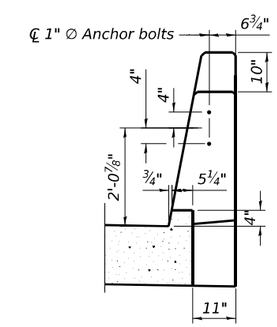

VIEW C-C

MODEL: Default
FILE NAME: pw://transystems-pw.bentley.com:transyscorp-pw1-hosted/Documents/Projects_2018/CH401/401180022/01-Stantec/CAD/MI-04_62R28/04-Sheets/04-Structures/0998312_0998313-MI-04-050-WB E. Precast Approach Slab Plan.dgn
10/9/2023 3:26:46 PM

HBM ENGINEERING GROUP, LLC

USER NAME =	DESIGNED - EN	REVISED -
	CHECKED - MI, JJS	REVISED -
PLOT SCALE =	DRAWN - EN	REVISED -
PLOT DATE =	CHECKED - MI, JJS	REVISED -

STATE OF ILLINOIS
DEPARTMENT OF TRANSPORTATION

WB. E. PRECAST APPROACH SLAB PLAN
STRUCTURE NOS. 099-8312 (EB) & 099-8313 (WB)

SHEET SA-51 OF SA-98 SHEETS

F.A.I. RTE.	SECTION	COUNTY	TOTAL SHEETS	SHEET NO.
I-80	FAI 80 21 STRUCTURE 7	WILL	1059	584
		CONTRACT NO. 62R28		
	ILLINOIS	FED. AID PROJECT		

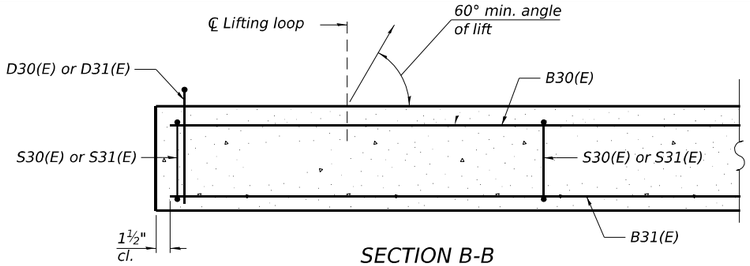

SECTION B-B

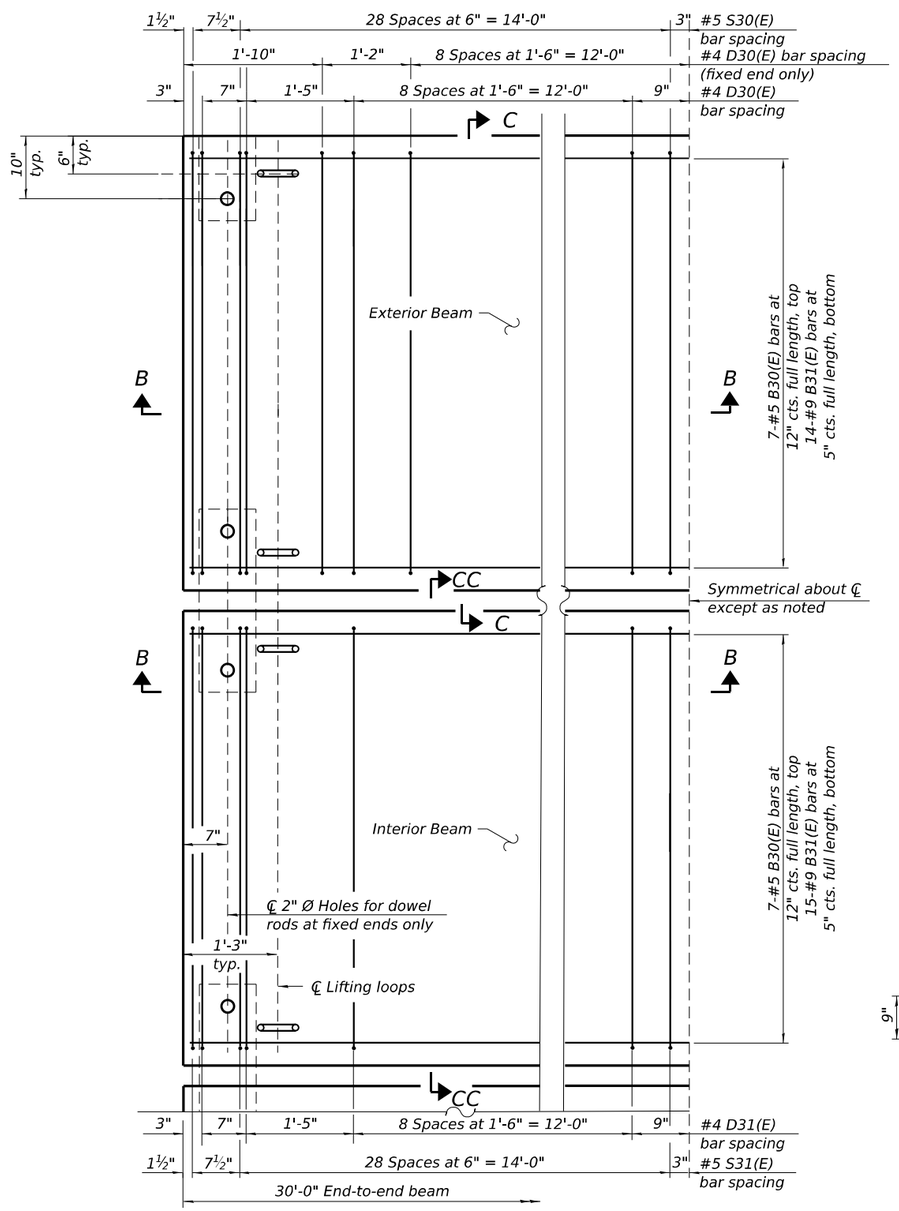

(Beams: 36" min. width; 72" max. width)

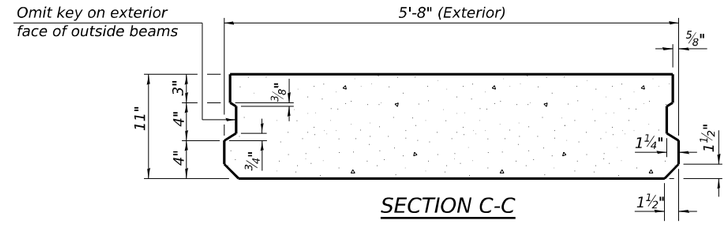

SECTION C-C

(Exterior Beam)
(Showing Dimensions)

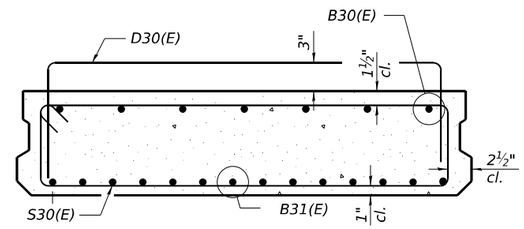

SECTION C-C

(Exterior Beam)
(Showing Reinforcement)

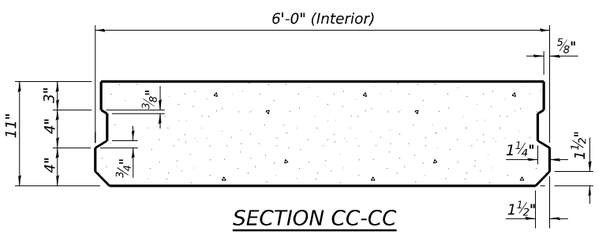

SECTION CC-CC

(Interior Beam)
(Showing Dimensions)

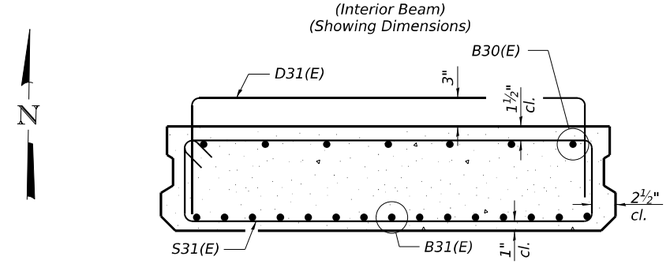

SECTION CC-CC

(Interior Beam)
(Showing Reinforcement)

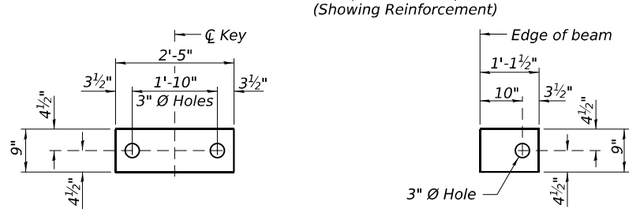

INTERIOR EXTERIOR

FABRIC BEARING PAD

Notes:
Bearing pads at fixed end shall be ½" thick and bearing pads at expansion ends shall be ¾" thick.

Omit holes for fabric bearing pads at approach slab footing end of beams.

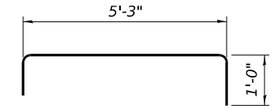

BAR D30(E)

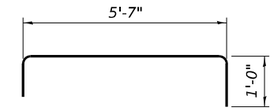

BAR D31(E)

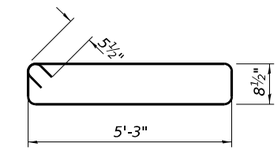

BAR S30(E)

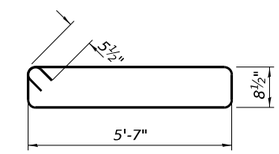

BAR S31(E)

NOTES:

1. The precast bridge approach slab shall be according to Section 504 of the Standard Specifications and shall be paid for at the contract unit price per square foot for Precast Bridge Approach Slab.
2. Cast-in-place substitution of Precast Bridge Approach Slab is not allowed.
3. The top surface of precast bridge approach slabs shall be finished similar to precast prestressed deck beams with concrete wearing surface as specified in the IDOT "Manual for Fabrication of Precast Prestressed Concrete Products."
4. Two ⅛" fabric adjusting shims of the dimensions of the exterior bearing pad shall be provided for each bearing pad location. Cost included with Precast Bridge Approach Slab.
5. A minimum 2 ½" Ø lifting pins shall be used to engage the lifting loops during handling.
6. Compressive strength of precast concrete, f'c shall be 6,000 psi.
7. Compressive strength of precast concrete during initial lifting, f'ci shall be 5,000 psi.

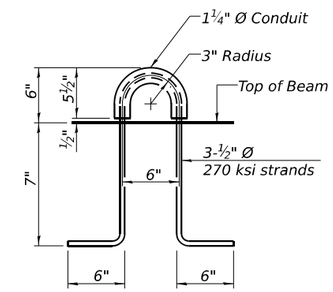

LIFTING LOOP DETAIL

(An alternate lifting loop with a proof load of 25,000 lbs. and utilized according to the manufacturer's recommendations may be used)

BAR LIST EACH INTERIOR BEAM

(For information only)

Bar	No.	Size	Length	Shape
B30(E)	7	#5	29'-8"	—
B31(E)	15	#9	29'-8"	—
D31(E)	22	#4	7'-7"	⊓
S31(E)	60	#5	13'-6"	⊏

BAR LIST EACH EXTERIOR BEAM

(For information only)

Bar	No.	Size	Length	Shape
B30(E)	7	#5	29'-8"	—
B31(E)	14	#9	29'-8"	—
D30(E)	32	#4	7'-3"	⊓
S30(E)	60	#5	12'-10"	⊏

(Beams: 36" min. width; 72" max. width)

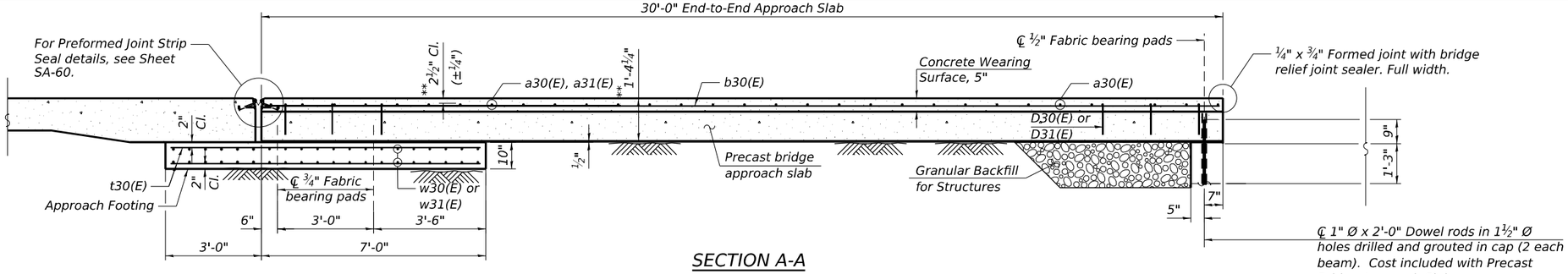

SECTION A-A

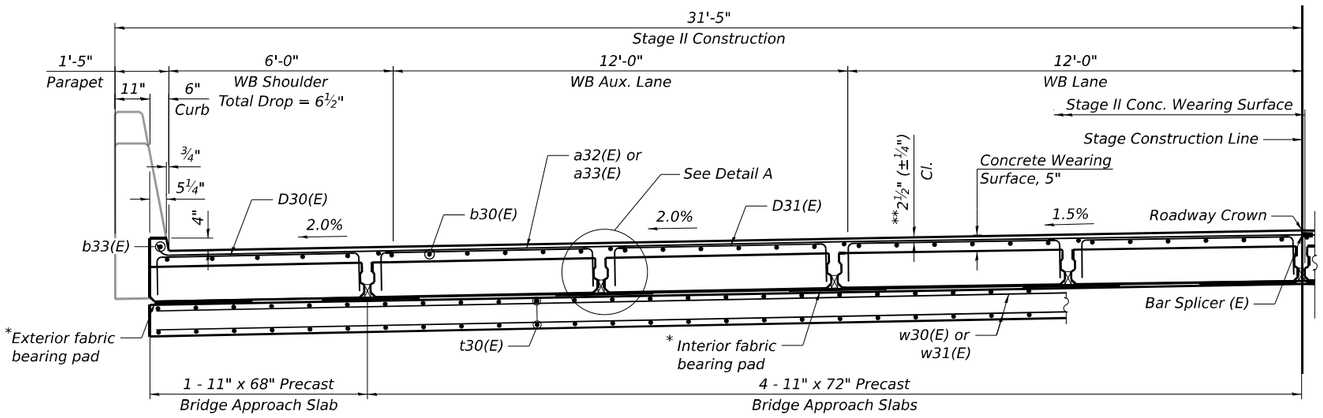

AT APPROACH FOOTING

SECTION B-B - STAGE II CONSTRUCTION

(Looking Upstation)

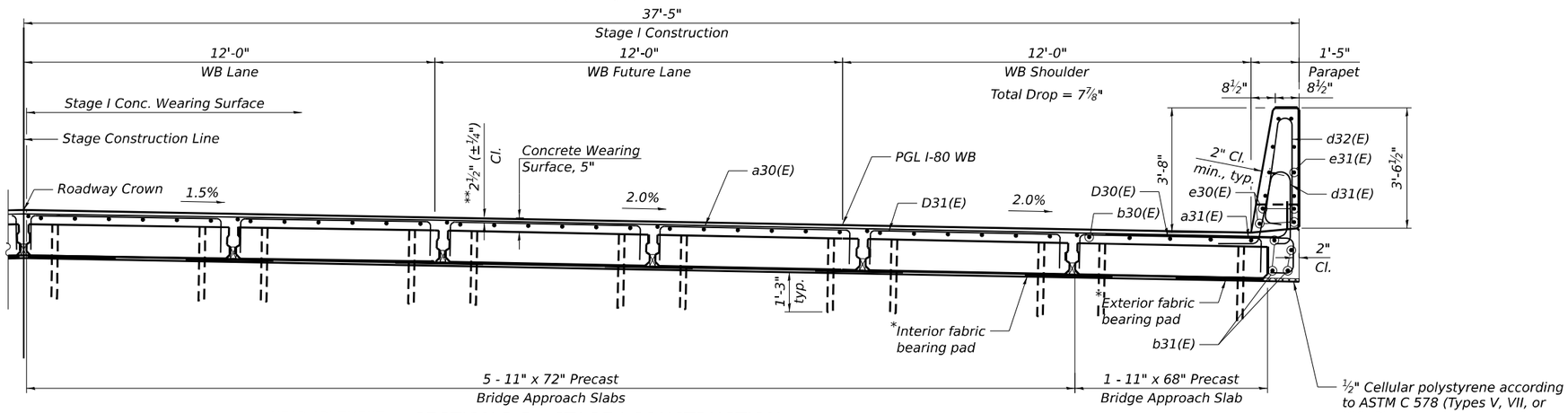

NEAR ABUTMENT

SECTION B-B - STAGE I CONSTRUCTION

(Looking Upstation)
(Footing not shown for clarity)

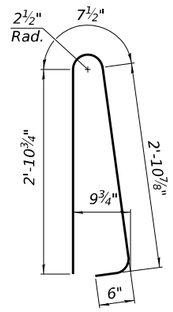

BAR d30(E)

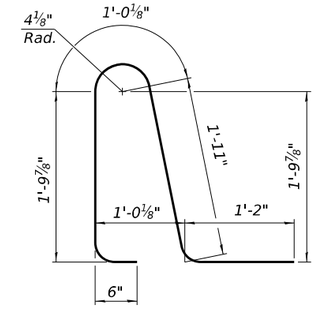

BAR d31(E)

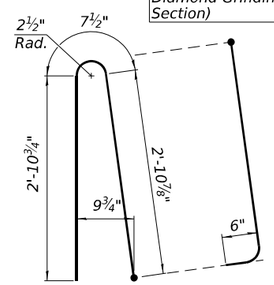

BAR d32(E)

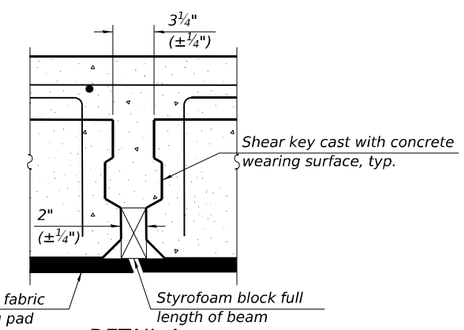

DETAIL A

*Fabric bearing pads at the expansion end shall be recessed ¼" into the approach footing and bonded. Adjusting shims, when required, shall be bonded to the top of the fabric bearing pads.

**Prior to grinding

S.N. 099-8313 (WB) EAST APPROACH BILL OF MATERIAL

Bar	No.	Size	Length	Shape
a30(E)	32	#5	37'-11"	
a31(E)	48	#5	8'-2"	
a32(E)	16	#5	31'-11"	
a33(E)	16	#5	30'-7"	
b30(E)	71	#4	29'-8"	
b31(E)	4	#5	29'-8"	
b32(E)	4	#5	14'-8"	
b33(E)	1	#4	14'-8"	
d30(E)	23	#5	7'-0"	
d31(E)	69	#5	6'-5"	
d32(E)	46	#5	7'-0"	
e30(E)	4	#4	29'-8"	
e31(E)	28	#4	14'-8"	
t30(E)	142	#4	9'-8"	
w30(E)	40	#5	37'-1"	
w31(E)	40	#5	30'-2"	
Concrete Structures			Cu Yd	21.0
Concrete Superstructure			Cu Yd	6.3
Protective Coat			Sq Yd	242.0
Reinforcement Bars, Epoxy Coated			Pound	38,440
Preformed Joint Seal 3 1/2"			Foot	30
Bridge Deck Grooving (Longitudinal)			Sq Yd	160.0
Concrete Wearing Surface, 5"			Sq Yd	240
Precast Bridge Approach Slab			Sq Ft	2,052
Diamond Grinding (Bridge Section)			Sq Yd	207

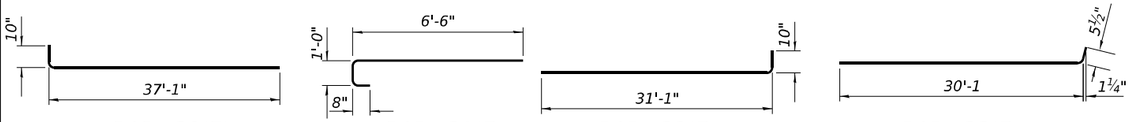

BAR a30(E) BAR a31(E) BAR a32(E) BAR a33(E)

MODEL: Default
FILE NAME: pw://transystems-pw.bentley.com:transyscorp-pw1-hosted/Documents/Projects_2018/CH401/401180022/01-Stantec/CAD/ML-04_62R28/04-Sheets/04-Structures/0998312_0998313-ML-04-052-WB E. Precast Approach Slab Sections and Details.dgn
10/9/2023 3:26:51 PM

HBM ENGINEERING GROUP, LLC

USER NAME =	DESIGNED - EN	REVISED -
	CHECKED - MI, JJS	REVISED -
PLOT SCALE =	DRAWN - EN	REVISED -
PLOT DATE =	CHECKED - MI, JJS	REVISED -

STATE OF ILLINOIS
DEPARTMENT OF TRANSPORTATION

WB E. PRECAST APPROACH SLAB SECTIONS AND DETAILS
STRUCTURE NOS. 099-8312 (EB) & 099-8313 (WB)

SHEET SA-53 OF SA-98 SHEETS

F.A.I. RTE.	SECTION	COUNTY	TOTAL SHEETS	SHEET NO.
I-80	FAI 80 21 STRUCTURE 7	WILL	1059	586
		CONTRACT NO. 62R28		
	ILLINOIS	FED. AID PROJECT		

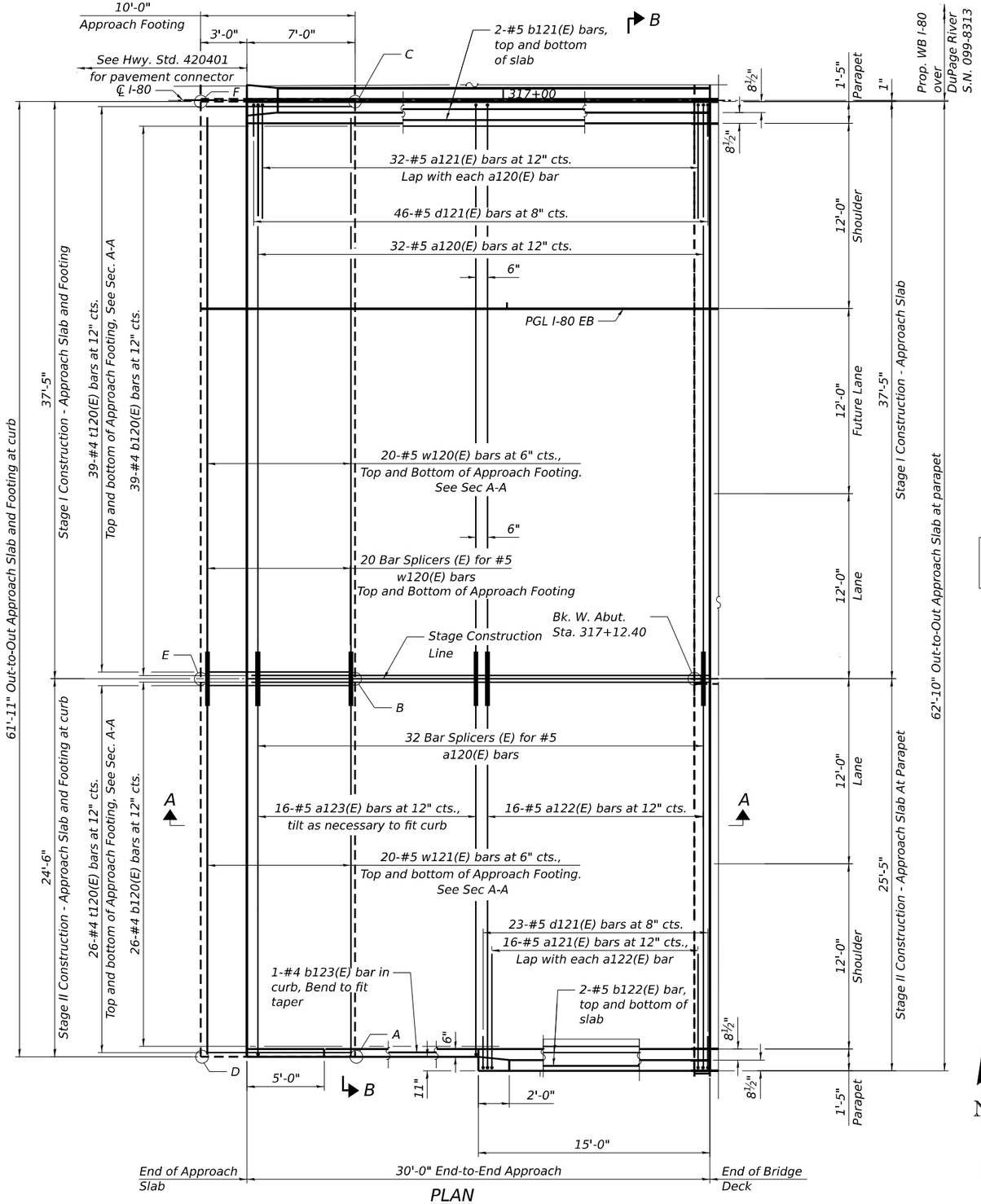

PLAN

TOP AND BOTTOM ELEVATIONS FOR EB WEST APPROACH FOOTING

West Approach		
Point / Location	Top	Bottom
A - SE	566.79	565.95
B - E. CL	567.22	566.38
C - NE	566.56	565.72
D - SW	566.83	566.00
E - W CL.	567.26	566.43
F - NW	566.60	565.77

NOTE:

1. For Sections A-A, B-B, Notes, Bill of Material and Detail A, see Sheet SA-56.

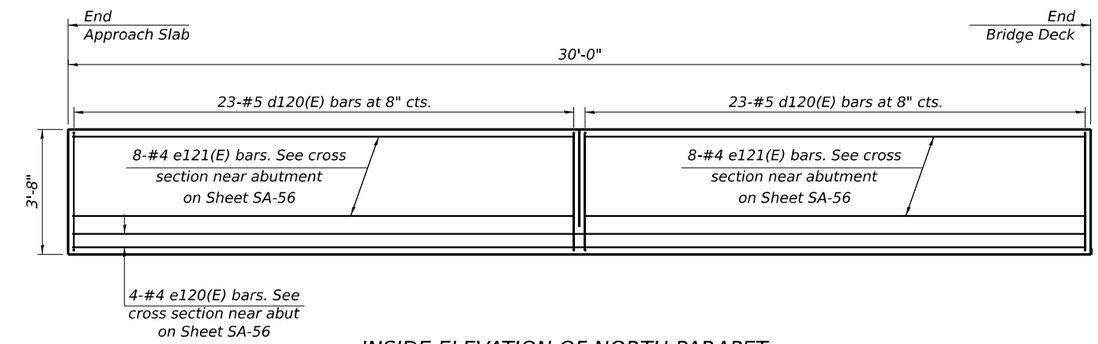

INSIDE ELEVATION OF NORTH PARAPET

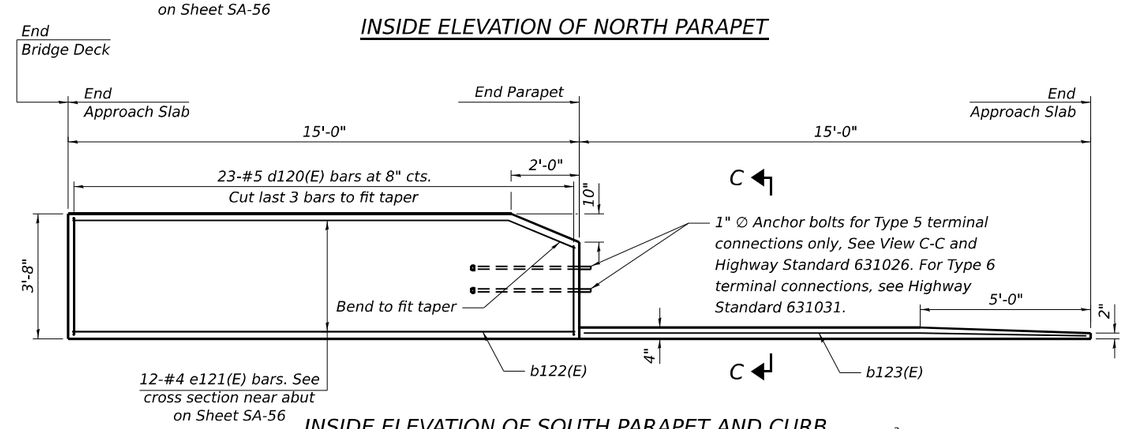

INSIDE ELEVATION OF SOUTH PARAPET AND CURB

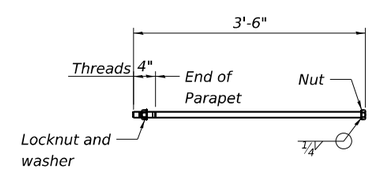

1" ∅ ANCHOR BOLT

(Anchor bolt assemblies shall be galvanized according to Article 1006.09 of the Standard Specifications. Cost of anchor bolt assemblies included with Concrete Superstructure.)

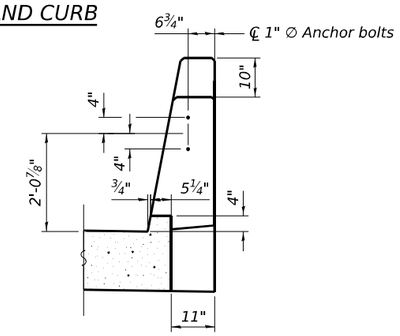

VIEW C-C

MODEL: Default
FILE NAME: pw://transystems-pw.bentley.com:transyscorp-pw1-hosted/Documents/Projects_2018/CH401/401180022/01-Stantec/CAD/ML-04_62R28/04-Sheets/04-Structures/0998312_0998313-ML-04-053-EB W. Precast Approach Slab Plan.dgn

10/9/2023 3:26:54 PM

HBM ENGINEERING GROUP, LLC

USER NAME =	DESIGNED - EN	REVISED -	
	CHECKED - MI, JJS	REVISED -	
PLOT SCALE =	DRAWN - EN	REVISED -	
PLOT DATE =	CHECKED - MI, JJS	REVISED -	

STATE OF ILLINOIS
DEPARTMENT OF TRANSPORTATION

EB W. PRECAST APPROACH SLAB PLAN
STRUCTURE NOS. 099-8312 (EB) & 099-8313 (WB)

SHEET SA-54 OF SA-98 SHEETS

F.A.I. RTE.	SECTION	COUNTY	TOTAL SHEETS	SHEET NO.
I-80	FAI 80 21 STRUCTURE 7	WILL	1059	587
		CONTRACT NO. 62R28		
	ILLINOIS	FED. AID PROJECT		

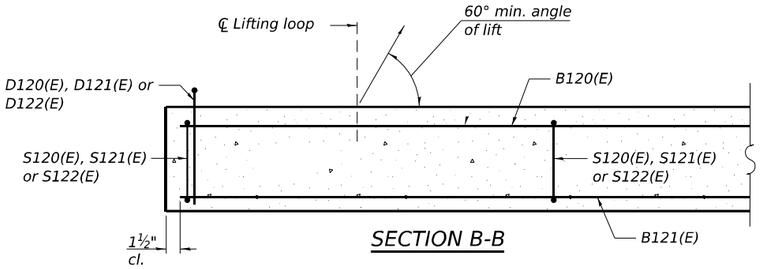

SECTION B-B

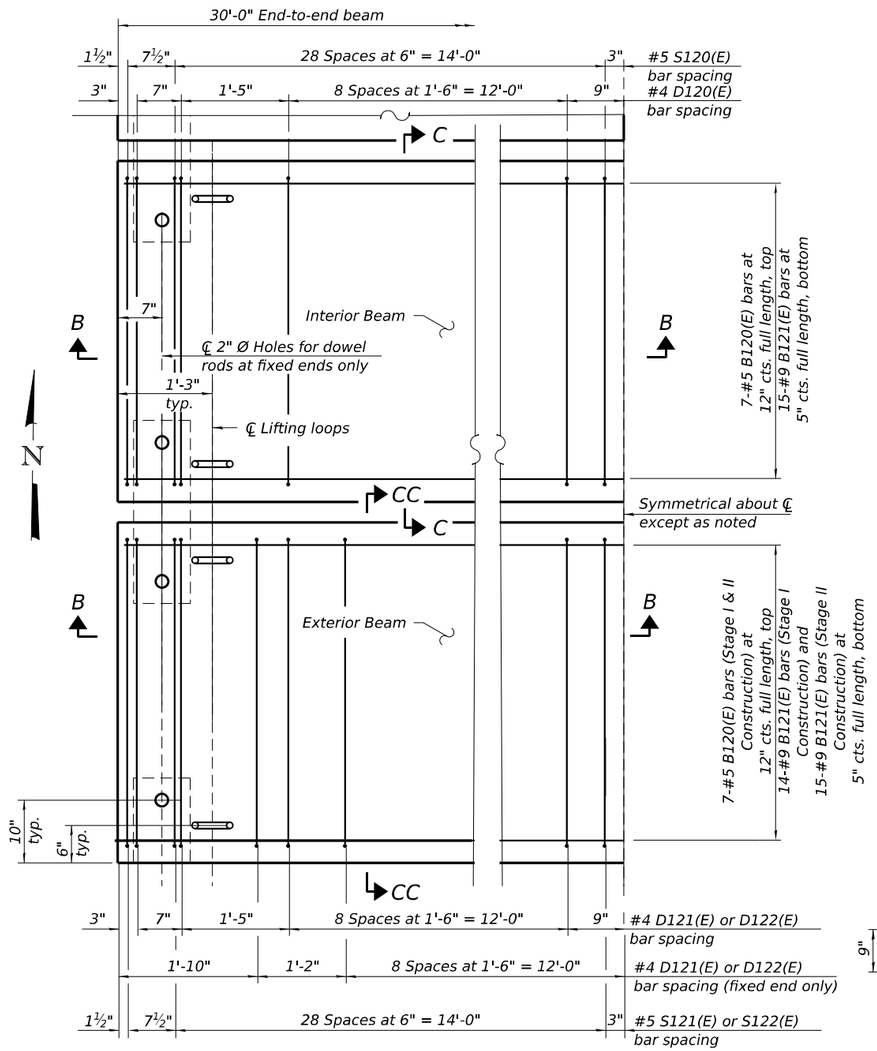

PLAN

(Beams: 36" min. width; 72" max. width)

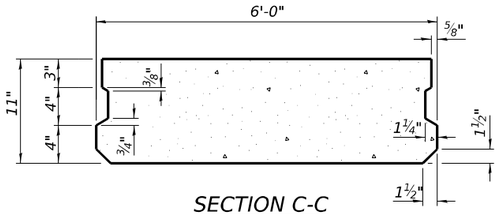

SECTION C-C
(Interior Beam)
(Showing Dimensions)

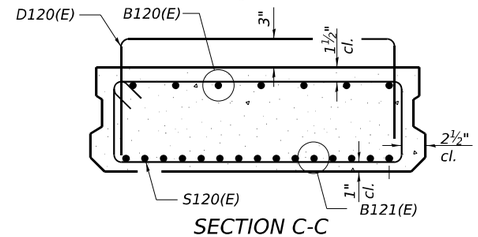

SECTION C-C
(Interior Beam)
(Showing Reinforcement)

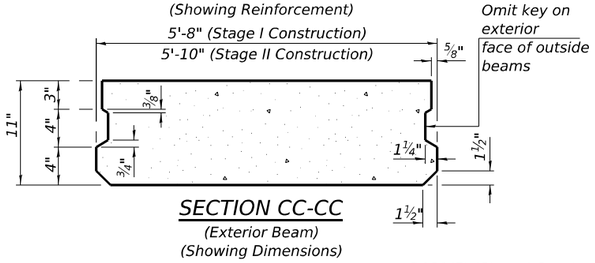

SECTION CC-CC
(Exterior Beam)
(Showing Dimensions)

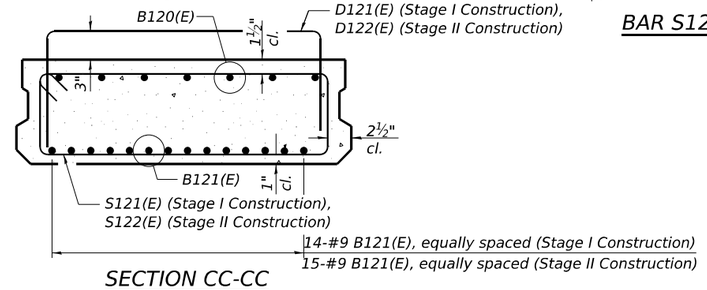

SECTION CC-CC
(Exterior Beam)
(Showing Reinforcement)

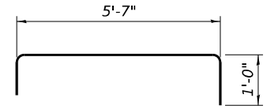

BAR D120(E)

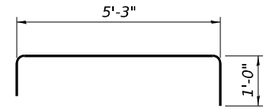

BAR D121(E)

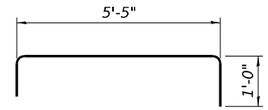

BAR D122(E)

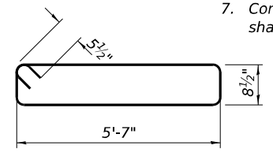

BAR S120(E)

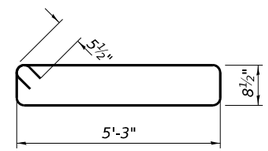

BAR S121(E)

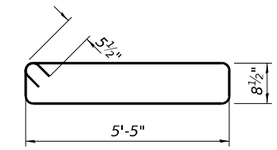

BAR S122(E)

NOTES:

1. The precast bridge approach slab shall be according to Section 504 of the Standard Specifications and shall be paid for at the contract unit price per square foot for Precast Bridge Approach Slab.
2. Cast-in-place substitution of Precast Bridge Approach Slab is not allowed.
3. The top surface of precast bridge approach slabs shall be finished similar to precast prestressed deck beams with concrete wearing surface as specified in the IDOT "Manual for Fabrication of Precast Prestressed Concrete Products."
4. Two ⅛" fabric adjusting shims of the dimensions of the exterior bearing pad shall be provided for each bearing pad location. Cost included with Precast Bridge Approach Slab.
5. A minimum 2 ½" Ø lifting pins shall be used to engage the lifting loops during handling.
6. Compressive strength of precast concrete, f'c shall be 6,000 psi.
7. Compressive strength of precast concrete during initial lifting, f'ci shall be 5,000 psi.

BAR LIST EACH INTERIOR BEAM

(For information only)

Bar	No.	Size	Length	Shape
B120(E)	7	#5	29'-8"	—
B121(E)	15	#9	29'-8"	—
D120(E)	22	#4	7'-7"	⊓
S120(E)	60	#5	13'-6"	⊏

BAR LIST EXTERIOR BEAM (STAGE I CONSTRUCTION)

(For information only)

Bar	No.	Size	Length	Shape
B120(E)	7	#5	29'-8"	—
B121(E)	14	#9	29'-8"	—
D121(E)	32	#4	7'-3"	⊓
S121(E)	60	#5	12'-10"	⊏

BAR LIST EXTERIOR BEAM (STAGE II CONSTRUCTION)

(For information only)

Bar	No.	Size	Length	Shape
B120(E)	7	#5	29'-8"	—
B121(E)	15	#9	29'-8"	—
D122(E)	32	#4	7'-5"	⊓
S122(E)	60	#5	13'-2"	⊏

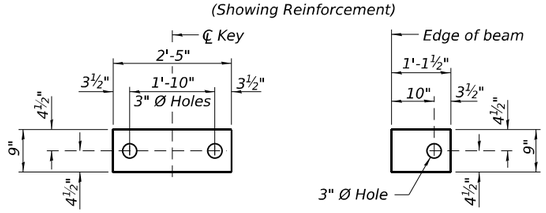

INTERIOR EXTERIOR

FABRIC BEARING PAD

Notes:

Bearing pads at fixed end shall be ½" thick and bearing pads at expansion ends shall be ¾" thick.

Omit holes for fabric bearing pads at approach slab footing end of beams.

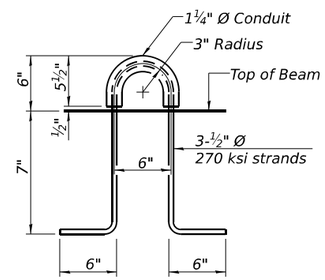

LIFTING LOOP DETAIL

(An alternate lifting loop with a proof load of 25,000 lbs. and utilized according to the manufacturer's recommendations may be used)

MODEL: Default
FILE NAME: pw://transystems-pw.bentley.com:transyscorp-pw1-hosted/Documents/Projects_2018/CH401401180022/01-Stantec/CAD/MI-04_62R28/04-Sheets/04-Structures/0998312_0998313-MI-04-054-EB W. Precast Approach Slab Beam Details.dgn

10/9/2023 3:26:56 PM

HBM ENGINEERING GROUP, LLC

USER NAME =	DESIGNED - EN	REVISED -
	CHECKED - MI, JJS	REVISED -
PLOT SCALE =	DRAWN - EN	REVISED -
PLOT DATE =	CHECKED - MI, JJS	REVISED -

STATE OF ILLINOIS
DEPARTMENT OF TRANSPORTATION

EB W. PRECAST APPROACH SLAB BEAM DETAILS
STRUCTURE NOS. 099-8312 (EB) & 099-8313 (WB)

SHEET SA-55 OF SA-98 SHEETS

F.A.I. RTE.	SECTION	COUNTY	TOTAL SHEETS	SHEET NO.
I-80	FAI 80 21 STRUCTURE 7	WILL	1059	588
		CONTRACT NO. 62R28		
	ILLINOIS	FED. AID PROJECT		

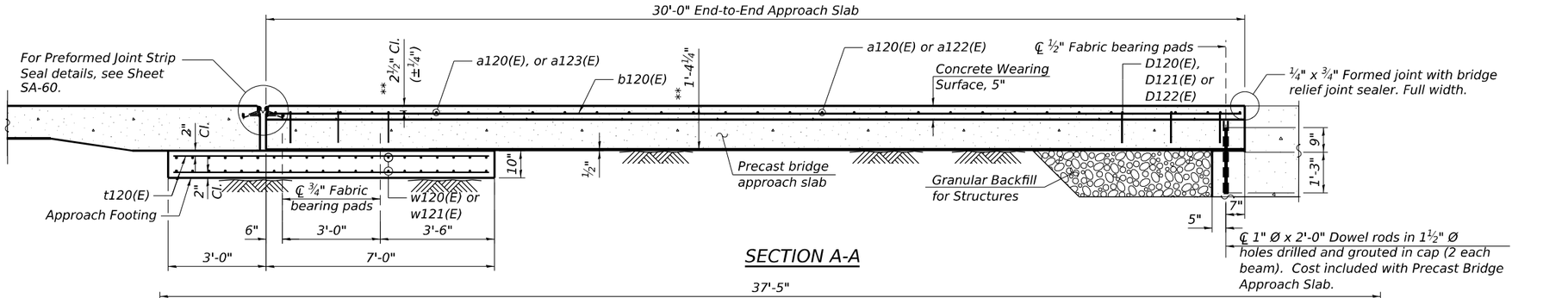

SECTION A-A

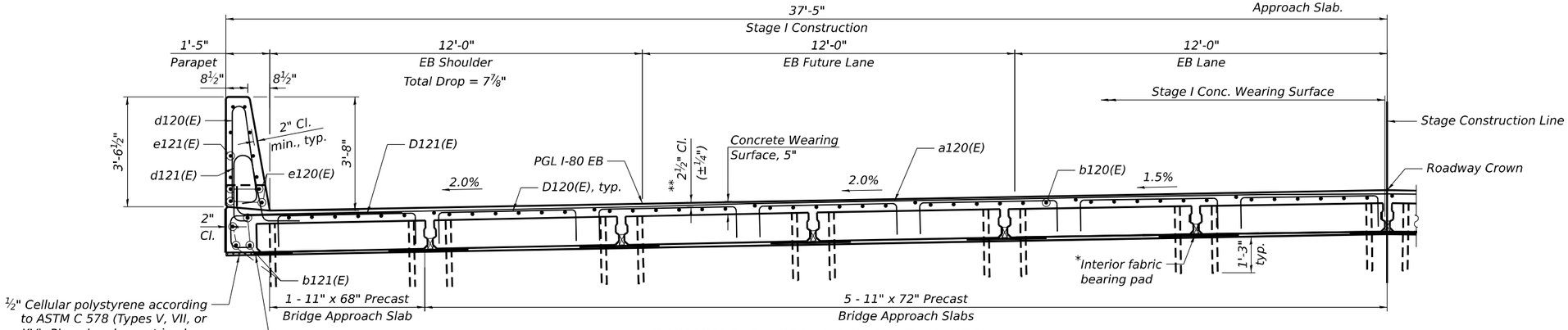

NEAR ABUTMENT

SECTION B-B - STAGE I CONSTRUCTION

(Looking Upstation)
(Footing not shown for clarity)

S.N. 099-8312 (EB) WEST APPROACH BILL OF MATERIAL

Bar	No.	Size	Length	Shape
a120(E)	32	#5	37'-11"	
a121(E)	48	#5	8'-2"	
a122(E)	16	#5	25'-11"	
a123(E)	16	#5	24'-7"	
b120(E)	65	#4	29'-8"	
b121(E)	4	#5	29'-8"	
b122(E)	4	#5	14'-8"	
b123(E)	1	#4	14'-8"	
d120(E)	69	#5	7'-0"	
d121(E)	69	#5	6'-5"	
e120(E)	4	#4	29'-8"	
e121(E)	28	#4	14'-8"	
t120(E)	130	#4	9'-8"	
w120(E)	40	#5	37'-1"	
w121(E)	40	#5	24'-2"	
Concrete Structures			Cu Yd	19.2
Concrete Superstructure			Cu Yd	6.3
Protective Coat			Sq Yd	222
Reinforcement Bars, Epoxy Coated			Pound	30,710
Bridge Deck Grooving (Longitudinal)			Sq Yd	120
Concrete Wearing Surface, 5"			Sq Yd	220
Precast Bridge Approach Slab			Sq Ft	1872
Diamond Grinding (Bridge Section)			Sq Yd	187

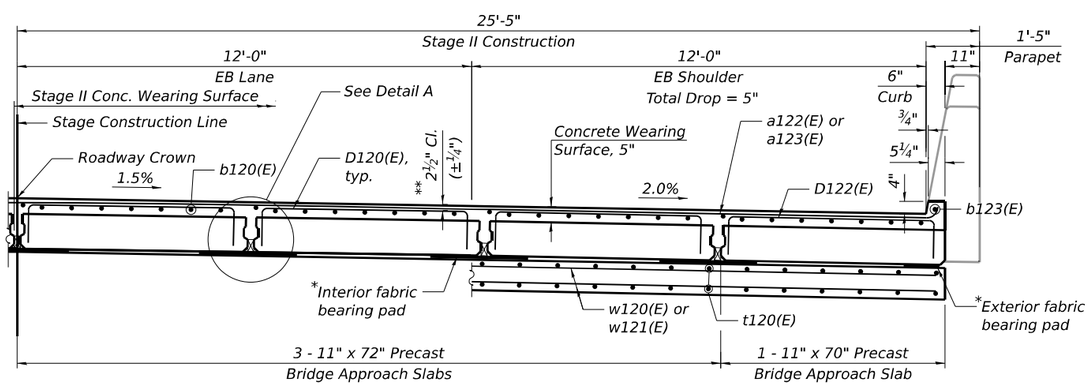

AT APPROACH FOOTING

SECTION B-B - STAGE II CONSTRUCTION

(Looking Upstation)

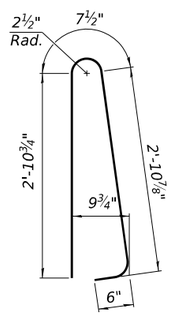

BAR d120(E)

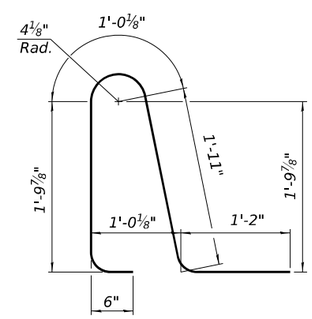

BAR d121(E)

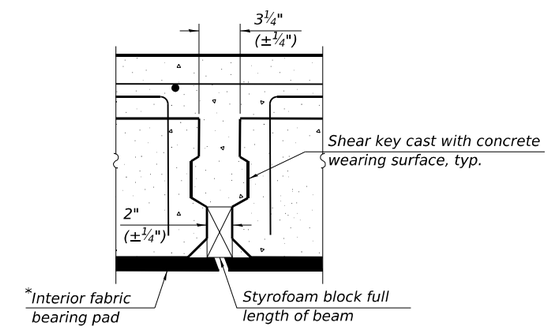

DETAIL A

*Fabric bearing pads at the expansion end shall be recessed ¼" into the approach footing and bonded. Adjusting shims, when required, shall be bonded to the top of the fabric bearing pads.

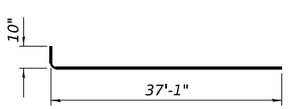

BAR a120(E)

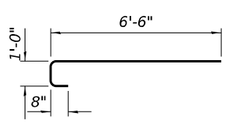

BAR a121(E)

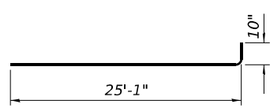

BAR a122(E)

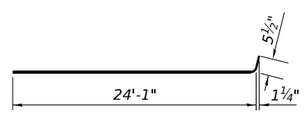

BAR a123(E)

**Prior to grinding

MODEL: Default
FILE NAME: pw://transystems-pw.bentley.com:transyscorp-pw1-hosted/Documents/Projects_2018/CH401401180022/01-Stantec/CAD/ML-04_62R28/04-Sheets/04-Structures/0998312_0998313-ML-04-055-EB W. Precast Approach Slab Sections and Details.dgn

10/9/2023 3:27:00 PM

HBM ENGINEERING GROUP, LLC

USER NAME =	DESIGNED - EN	REVISED -
	CHECKED - MI, JJS	REVISED -
PLOT SCALE =	DRAWN - EN	REVISED -
PLOT DATE =	CHECKED - MI, JJS	REVISED -

STATE OF ILLINOIS
DEPARTMENT OF TRANSPORTATION

EB W. PRECAST APPROACH SLAB SECTIONS AND DETAILS
STRUCTURE NOS. 099-8312 (EB) & 099-8313 (WB)

SHEET SA-56 OF SA-98 SHEETS

F.A.I. RTE.	SECTION	COUNTY	TOTAL SHEETS	SHEET NO.
I-80	FAI 80 21 STRUCTURE 7	WILL	1059	589
		CONTRACT NO. 62R28		
	ILLINOIS	FED. AID PROJECT		

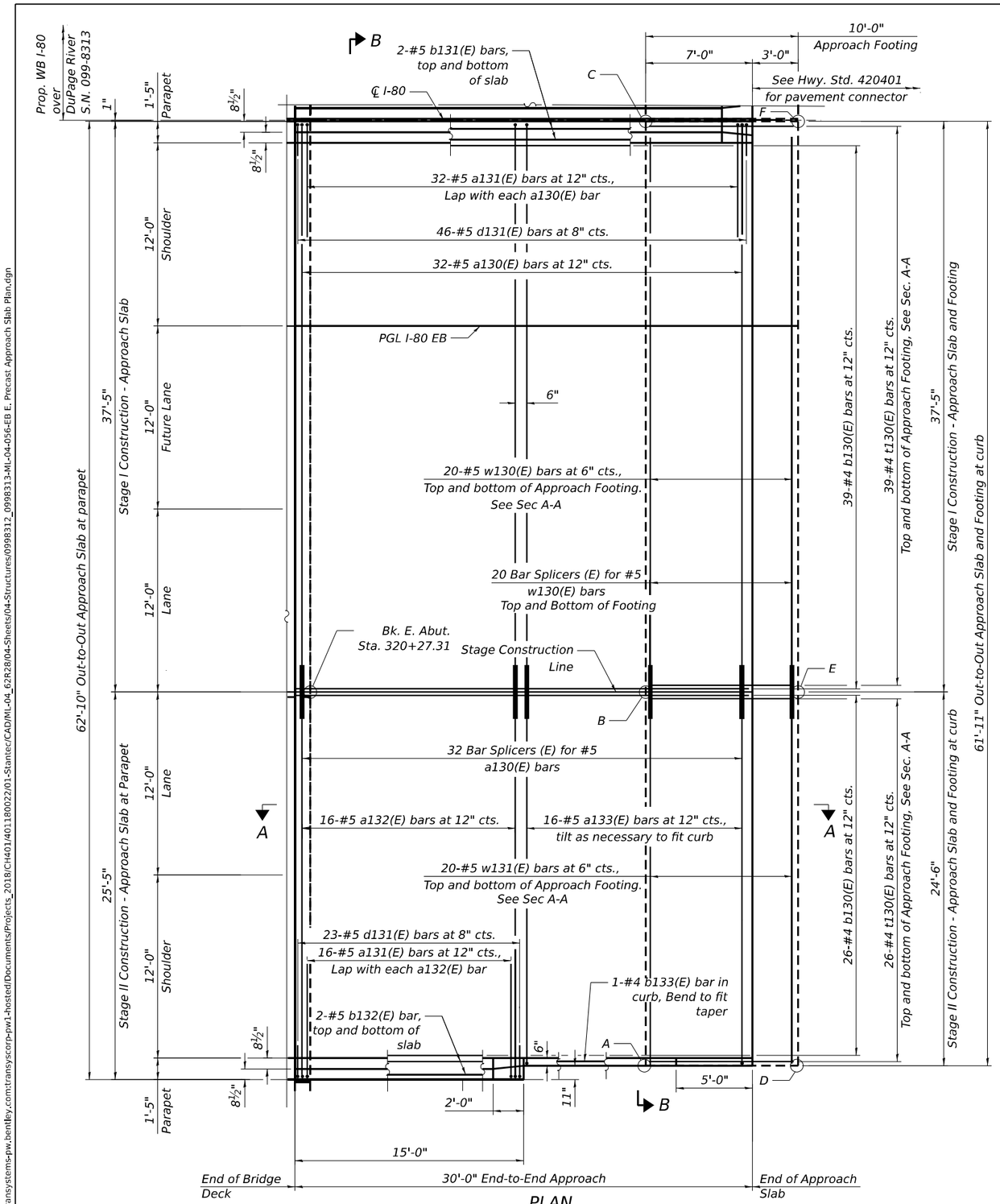

PLAN

TOP AND BOTTOM ELEVATIONS FOR EB EAST APPROACH FOOTING

East Approach		
Point / Location	Top	Bottom
A - SW	565.19	564.35
B - W CL	565.62	564.78
C - NW	564.96	564.12
D - SE	565.14	564.31
E - E CL	565.57	564.74
F - NE	564.91	564.08

NOTE:

1. For Sections A-A, B-B, Notes, Bill of Material and Detail A, see Sheet SA-59.

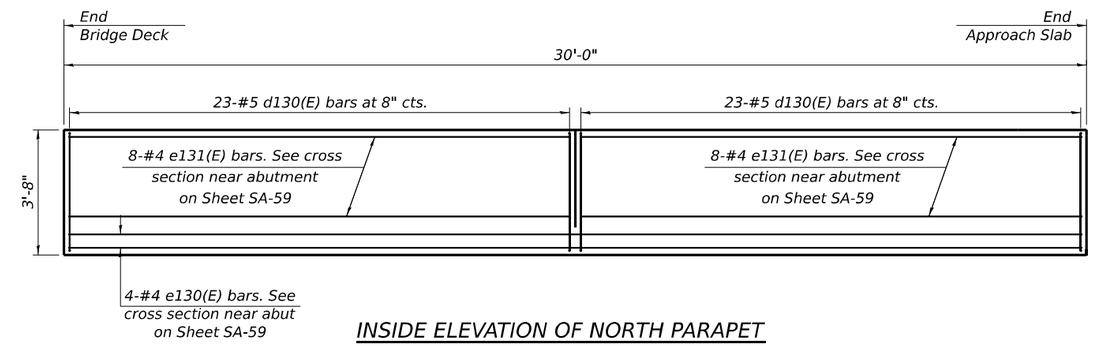

INSIDE ELEVATION OF NORTH PARAPET

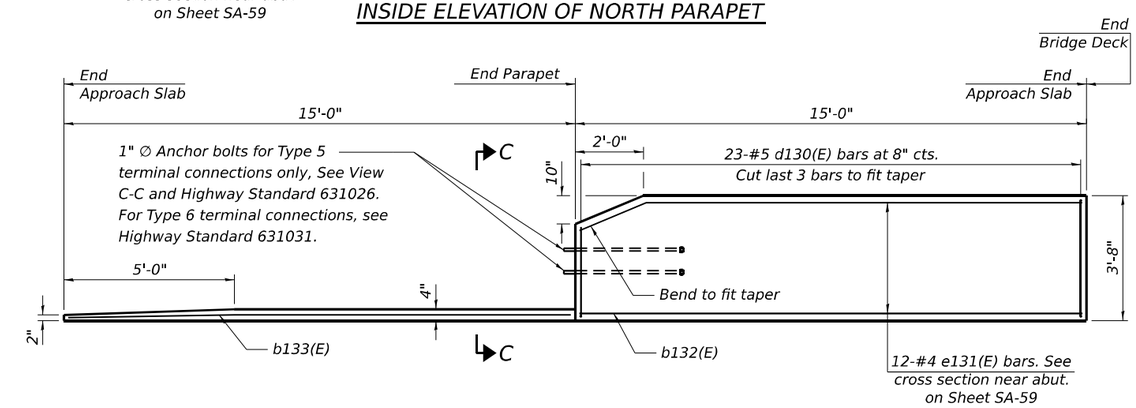

INSIDE ELEVATION OF SOUTH PARAPET AND CURB

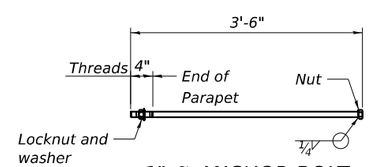

1" ∅ ANCHOR BOLT

(Anchor bolt assemblies shall be galvanized according to Article 1006.09 of the Standard Specifications. Cost of anchor bolt assemblies included with Concrete Superstructure.)

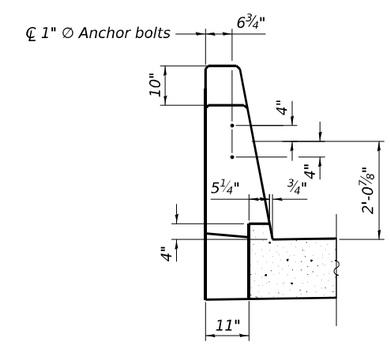

VIEW C-C

N

USER NAME =	DESIGNED - EN	REVISED -	
	CHECKED - MI, JJS	REVISED -	
PLOT SCALE =	DRAWN - EN	REVISED -	
PLOT DATE =	CHECKED - MI	REVISED -	

HBM ENGINEERING GROUP, LLC

STATE OF ILLINOIS
DEPARTMENT OF TRANSPORTATION

EB E. PRECAST APPROACH SLAB PLAN
STRUCTURE NOS. 099-8312 (EB) & 099-8313 (WB)

SHEET SA-57 OF SA-98 SHEETS

F.A.I. RTE.	SECTION	COUNTY	TOTAL SHEETS	SHEET NO.
I-80	FAI 80 21 STRUCTURE 7	WILL	1059	590

CONTRACT NO. 62R28

ILLINOIS FED. AID PROJECT

MODEL: Default
FILE NAME: pw://transystems-pw.bentley.com:transyscorp-pw1-hosted/Documents/Projects_2018/CH401/401180022/01-Stantec/CAD/MI-04_62R28/04-Sheets/04-Structures/0998312_0998313-MI-04-056-EB E. Precast Approach Slab Plan.dgn

10/9/2023 3:27:03 PM

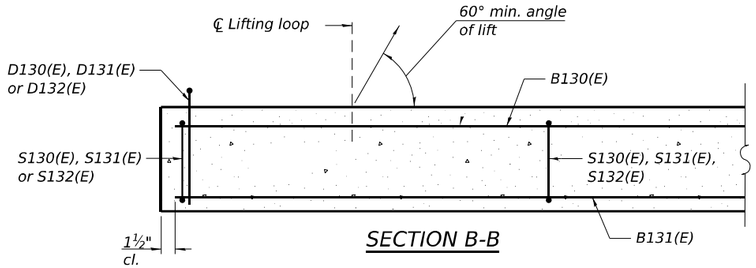

SECTION B-B

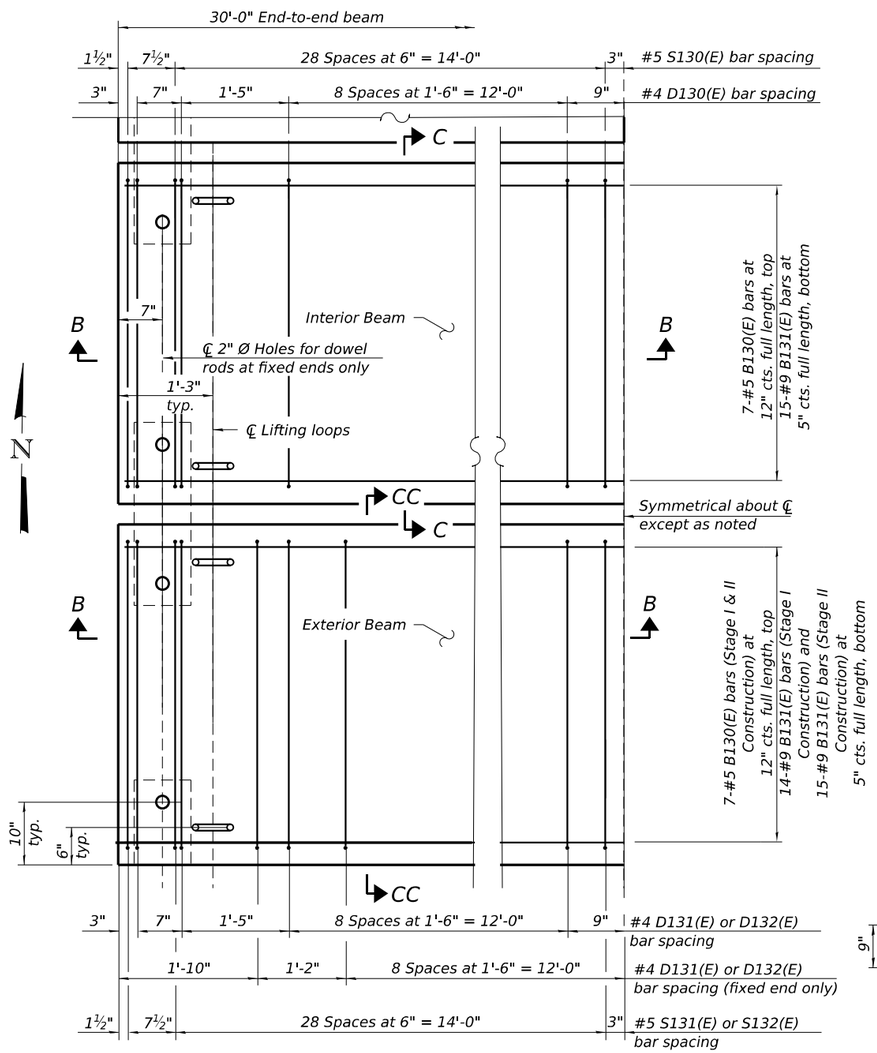

PLAN

(Beams: 36" min. width; 72" max. width)

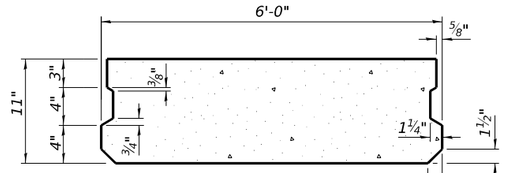

SECTION C-C
(Interior Beam)
(Showing Dimensions)

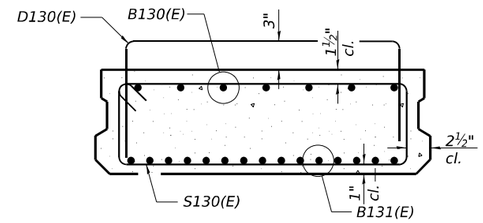

SECTION C-C
(Interior Beam)
(Showing Reinforcement)

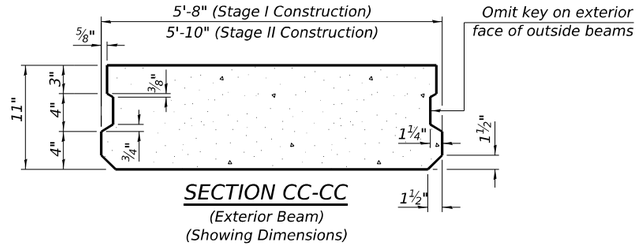

SECTION CC-CC
(Exterior Beam)
(Showing Dimensions)

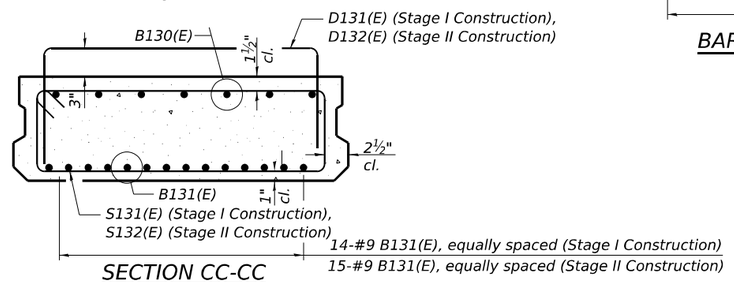

SECTION CC-CC
(Exterior Beam)
(Showing Reinforcement)

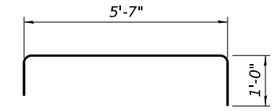

BAR D130(E)

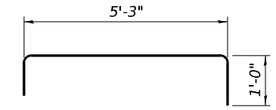

BAR D131(E)

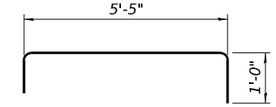

BAR D132(E)

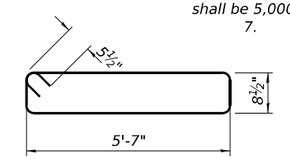

BAR S130(E)

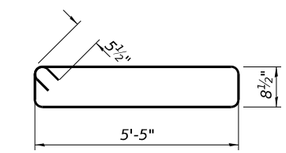

BAR S132(E)

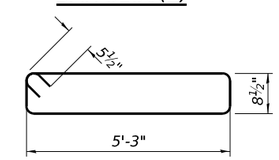

BAR S131(E)

NOTES:

1. The precast bridge approach slab shall be according to Section 504 of the Standard Specifications and shall be paid for at the contract unit price per square foot for Precast Bridge Approach Slab.
2. Cast-in-place substitution of Precast Bridge Approach Slab is not allowed.
3. The top surface of precast bridge approach slabs shall be finished similar to precast prestressed deck beams with concrete wearing surface as specified in the IDOT "Manual for Fabrication of Precast Prestressed Concrete Products."
4. Two ⅛" fabric adjusting shims of the dimensions of the exterior bearing pad shall be provided for each bearing pad location. Cost included with Precast Bridge Approach Slab.
5. A minimum 2 ½" Ø lifting pins shall be used to engage the lifting loops during handling.
6. Compressive strength of precast concrete, f'c shall be 6,000 psi.

   Compressive strength of precast concrete during initial lifting, f'ci shall be 5,000 psi.
7.

BAR LIST
EACH INTERIOR BEAM
(For information only)

Bar	No.	Size	Length	Shape
B130(E)	7	#5	29'-8"	—
B131(E)	15	#9	29'-8"	—
D130(E)	22	#4	7'-7"	⊓
S130(E)	60	#5	13'-6"	▭

BAR LIST
EXTERIOR BEAM
(STAGE I CONSTRUCTION)
(For information only)

Bar	No.	Size	Length	Shape
B130(E)	7	#5	29'-8"	—
B131(E)	14	#9	29'-8"	—
D131(E)	32	#4	7'-3"	⊓
S131(E)	60	#5	12'-10"	▭

BAR LIST
EXTERIOR BEAM
(STAGE II CONSTRUCTION)
(For information only)

Bar	No.	Size	Length	Shape
B130(E)	7	#5	29'-8"	—
B131(E)	15	#9	29'-8"	—
D132(E)	32	#4	7'-5"	⊓
S132(E)	60	#5	13'-2"	▭

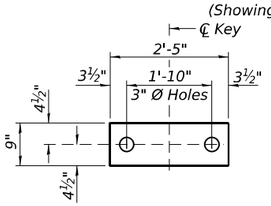

INTERIOR

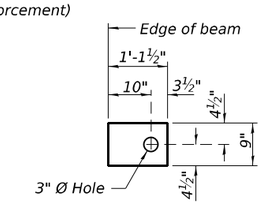

EXTERIOR

FABRIC BEARING PAD

Notes:

Bearing pads at fixed end shall be ½" thick and bearing pads at expansion ends shall be ¾" thick.

Omit holes for fabric bearing pads at approach slab footing end of beams.

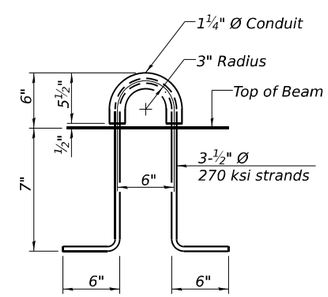

LIFTING LOOP DETAIL

(An alternate lifting loop with a proof load of 25,000 lbs. and utilized according to the manufacturer's recommendations may be used)

MODEL: Default
FILE NAME: pw://transystems-pw.bentley.com:transyscorp-pw1-hosted/Documents/Projects_2018/CH401/401180022/01-Stantec/CAD/ML-04_62R28/04-Sheets/04-Structures/0998312_0998313-ML-04-057-EB E. Precast Approach Slab Beam Details.dgn

10/9/2023 3:27:05 PM

HBM ENGINEERING GROUP, LLC

USER NAME =	DESIGNED - EN	REVISED -	
	CHECKED - MI, JJS	REVISED -	
PLOT SCALE =	DRAWN - EN	REVISED -	
PLOT DATE =	CHECKED - MI	REVISED -	

STATE OF ILLINOIS
DEPARTMENT OF TRANSPORTATION

EB E. PRECAST APPROACH SLAB BEAM DETAILS
STRUCTURE NOS. 099-8312 (EB) & 099-8313 (WB)

SHEET SA-58 OF SA-98 SHEETS

F.A.I. RTE.	SECTION	COUNTY	TOTAL SHEETS	SHEET NO.
I-80	FAI 80 21 STRUCTURE 7	WILL	1059	591
		CONTRACT NO. 62R28		
	ILLINOIS	FED. AID PROJECT		

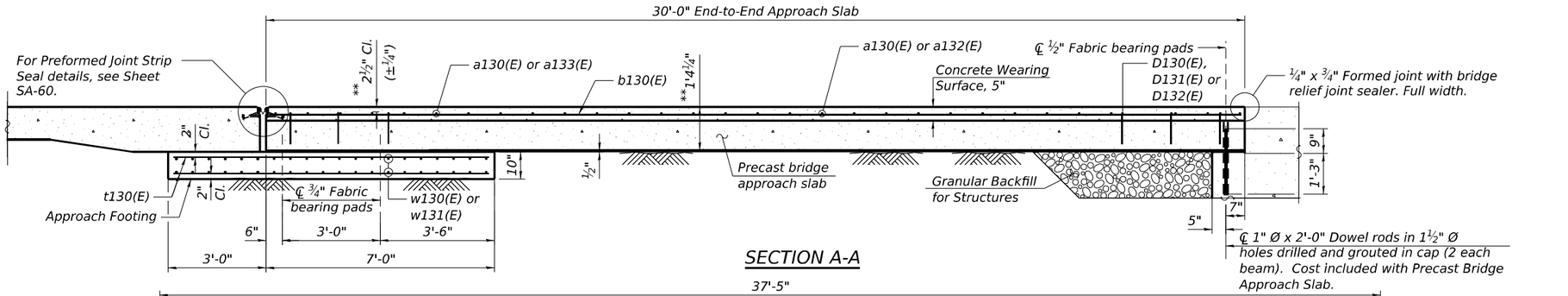

SECTION A-A

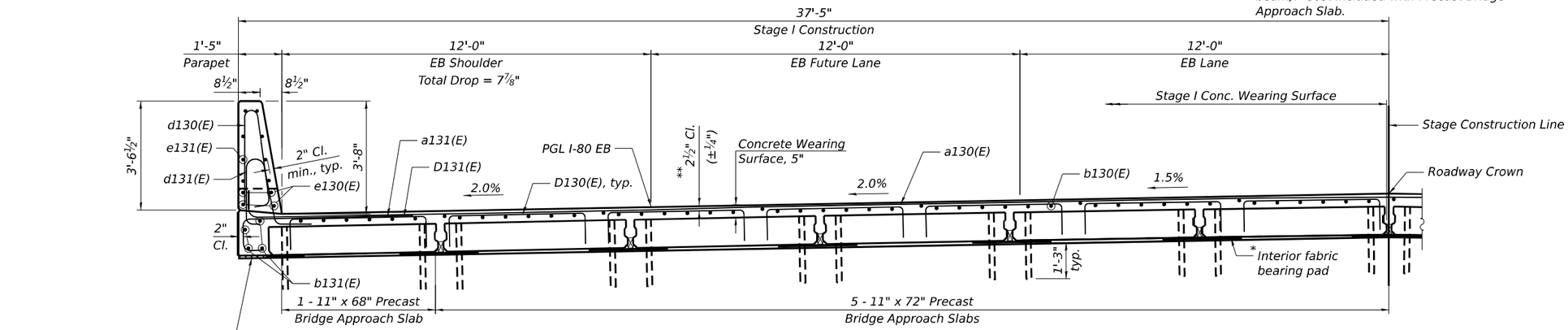

NEAR ABUTMENT

SECTION B-B - STAGE I CONSTRUCTION

(Looking Upstation)
(Footing not shown for clarity)

½" Cellular polystyrene according to ASTM C 578 (Types V, VII, or XV). Placed under cast in place portion of approach slab full length.

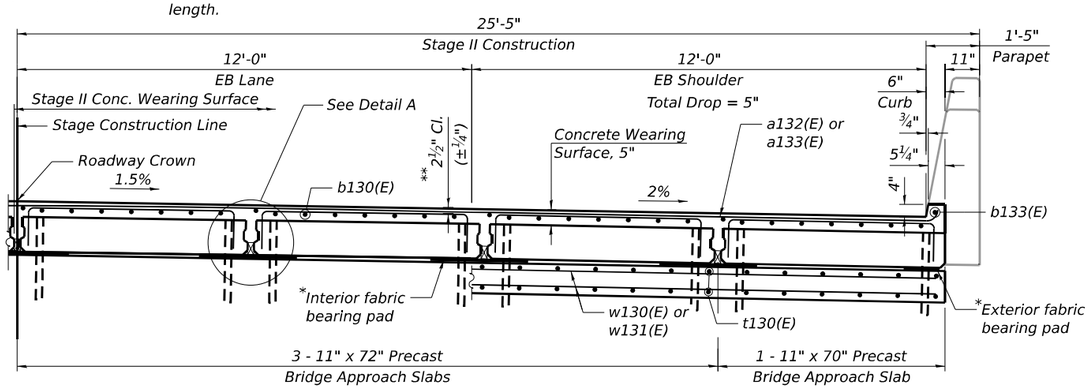

AT APPROACH FOOTING

SECTION B-B - STAGE II CONSTRUCTION

(Looking Upstation)

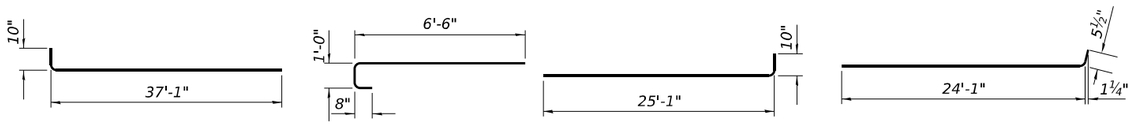

BAR a130(E) BAR a131(E) BAR a132(E) BAR a133(E)

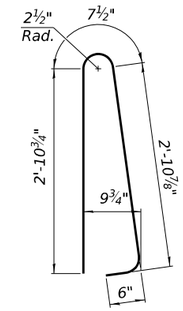

BAR d130(E)

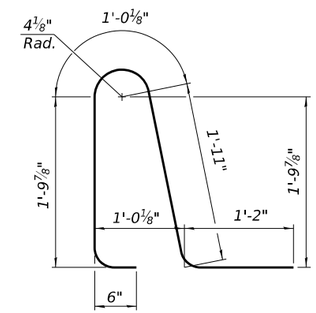

BAR d131(E)

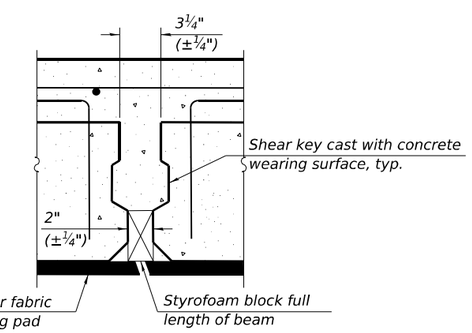

DETAIL A

*Fabric bearing pads at the expansion end shall be recessed ¼" into the approach footing and bonded. Adjusting shims, when required, shall be bonded to the top of the fabric bearing pads.

**Prior to grinding

S.N. 099-8312 (EB) EAST APPROACH BILL OF MATERIAL

Bar	No.	Size	Length	Shape
a130(E)	32	#5	37'-11"	
a131(E)	48	#5	8'-2"	
a132(E)	16	#5	25'-11"	
a133(E)	16	#5	24'-7"	
b130(E)	65	#4	29'-8"	
b131(E)	4	#5	29'-8"	
b132(E)	4	#5	14'-8"	
b133(E)	1	#4	14'-8"	
d130(E)	69	#5	7'-0"	
d131(E)	69	#5	6'-5"	
e130(E)	4	#4	29'-8"	
e131(E)	28	#4	14'-8"	
t130(E)	130	#4	9'-8"	
w130(E)	40	#5	37'-1"	
w131(E)	40	#5	24'-2"	
Concrete Structures			Cu Yd	19.2
Concrete Superstructure			Cu Yd	6.3
Protective Coat			Sq Yd	222
Reinforcement Bars, Epoxy Coated			Pound	30,710
Bridge Deck Grooving (Longitudinal)			Sq Yd	120
Concrete Wearing Surface, 5"			Sq Yd	220
Precast Bridge Approach Slab			Sq Ft	1872
Diamond Grinding (Bridge Section)			Sq Yd	187

HBM ENGINEERING GROUP, LLC

USER NAME =	DESIGNED - EN	REVISED -	
	CHECKED - MI, JJS	REVISED -	
PLOT SCALE =	DRAWN - EN	REVISED -	
PLOT DATE =	CHECKED - MI	REVISED -	

STATE OF ILLINOIS
DEPARTMENT OF TRANSPORTATION

EB E. PRECAST APPROACH SLAB SECTIONS AND DETAILS
STRUCTURE NOS. 099-8312 (EB) & 099-8313 (WB)

SHEET SA-59 OF SA-98 SHEETS

F.A.I. RTE.	SECTION	COUNTY	TOTAL SHEETS	SHEET NO.
I-80	FAI 80 21 STRUCTURE 7	WILL	1059	592
		CONTRACT NO. 62R28		
	ILLINOIS	FED. AID PROJECT		

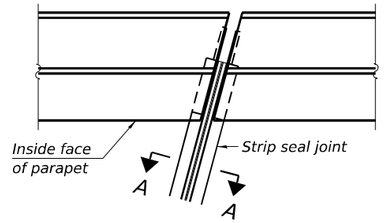

FOR SKEWS ≤ 30°

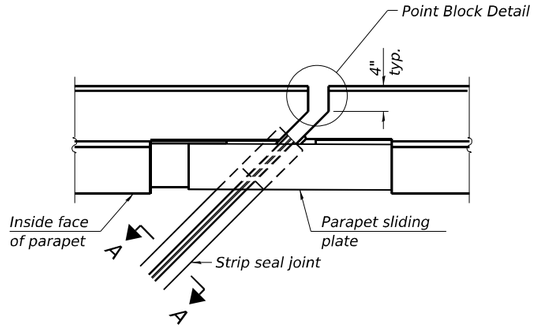

FOR SKEWS > 30°

PLAN AT PARAPET

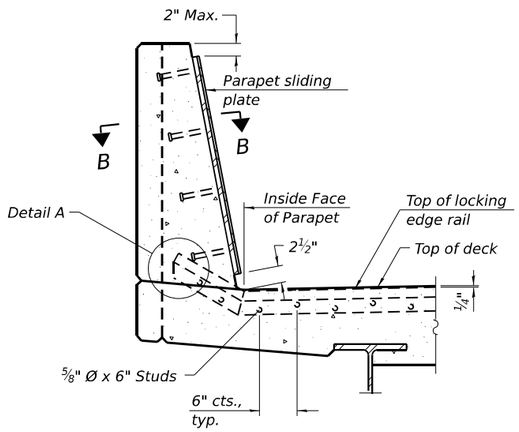

SECTION AT PARAPET

(Skews > 30° shown. Skews ≤ 30° similar except as shown in plan view.)

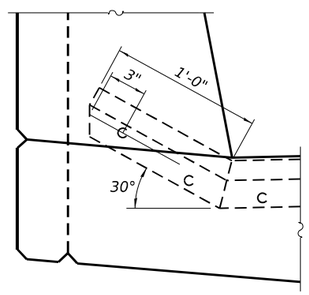

DETAIL A

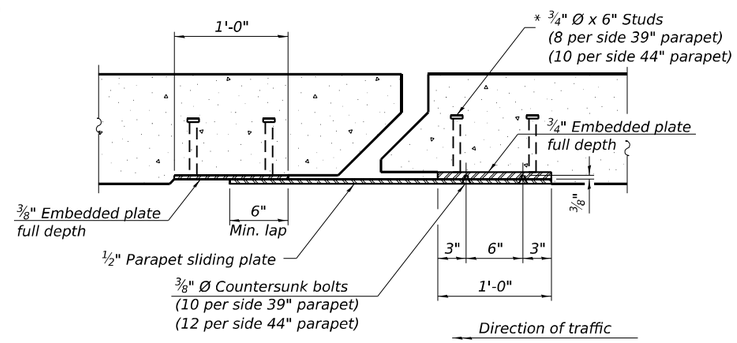

SECTION B-B

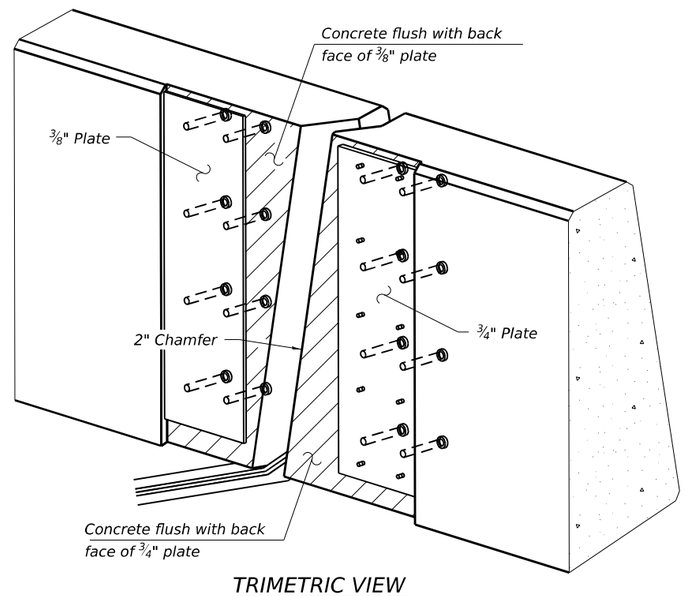

TRIMETRIC VIEW

(Showing embedded plates only)

Notes:

The strip seal shall be made continuous and shall have a minimum thickness of ¼". The configuration of the strip seal shall match the configuration of the locking edge rails. Open or "webbed" strip seal gland configurations are not permitted. The gland shall be sized for a maximum rated movement of 4 inches.

The locking edge rails depicted are configured for typical applications and are conceptual only. The actual configuration of the locking edge rails and matching strip seal may vary from manufacturer to manufacturer provided they fit the application and meet the minimum anchorage shown. Flanged edge rails, however, will not be allowed. Locking edge rails may exceed the 4½" maximum depth provided the anchorage system is revised according to the manufacturer's recommendation.

The manufacturer's recommended installation methods shall be followed.

All steel components shall be galvanized after fabrication according to Article 520.03 of the Standard Specifications.

The Maximum space between locking edge rail segments shall be c" and sealed with a suitable sealant; however, any rail joint within 10' measured perpendicular to the face of the curb or parapet shall be welded as shown in the locking edge rail splice detail.

Cost of parapet sliding plates, embedded plates, and anchorage studs included with Preformed Joint Strip Seal.

39" constant slope barrier shown, 44" constant slope barrier similar as noted.

The concrete opening below the strip seal will vary based on the locking edge rail chosen by the Contractor. Deck and parapet lengths shown elsewhere in the plans are dimensioned to the concrete opening, not the joint opening, and are based on the rolled locking edge rail. If the Contractor elects to use a different locking edge rail, dimensional adjustments may be required. One exception to this would be the strip seal joint at the end of the precast bridge approach slab. For these cases the pavement connector length shall be adjusted, not the length of the bridge approach slab.

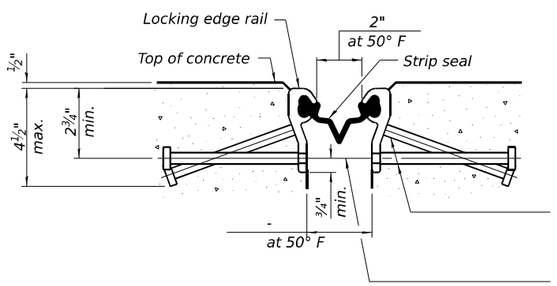

SHOWING ROLLED RAIL JOINT

* ⅝" Ø x 6" studs @ 6" cts. (alternate angled/bent studs with horizontal studs)

⅜" Ø threaded rods in 7/16" Ø holes at 4'-0"± cts. for holding the proper joint opening based on the temperature during the deck pour. Place to miss studs. All rods shall be burned, or sawed off flush with the plates after concrete is set.

SECTION A-A

* Granular or solid flux filled headed studs conforming to Article 1006.32 of the Std. Specs., automatically end welded.

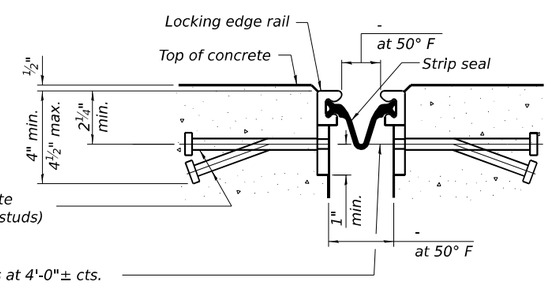

SHOWING WELDED RAIL JOINT

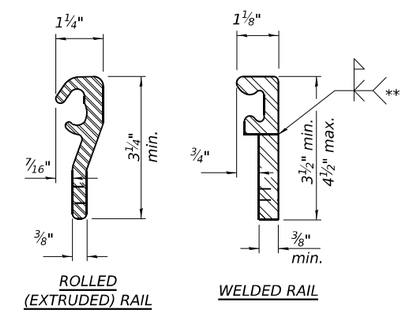

LOCKING EDGE RAILS

** Back gouge not required if complete joint penetration is verified by mock-up.

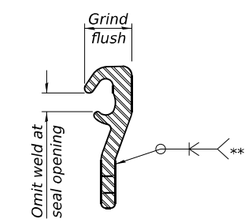

LOCKING EDGE RAIL SPLICE

The inside of the locking edge rail groove shall be free of weld residue. Rolled rail shown, welded rail similar.

EB APPROACH SLABS BILL OF MATERIAL

ITEM	UNIT	TOTAL
Preformed Joint Strip Seal	Foot	123

WB APPROACH SLABS BILL OF MATERIAL

ITEM	UNIT	TOTAL
Preformed Joint Strip Seal	Foot	133

MODEL: Default
FILE NAME: pw://transystems-pw.bentley.com:transyscorp-pw1-hosted/Documents/Projects_2018/CH401/401180022/01-Stantec/CAD/ML-04_62R28/04-Sheets/04-Structures/0998312_0998313-ML-04-058A-PreformedJointStripSeal.dgn
10/9/2023 3:27:27 PM

HBM ENGINEERING GROUP, LLC

USER NAME =	DESIGNED - JMI	REVISED -
	CHECKED - MI	REVISED -
PLOT SCALE =	DRAWN - JMI	REVISED -
PLOT DATE =	CHECKED - MI	REVISED -

STATE OF ILLINOIS
DEPARTMENT OF TRANSPORTATION

MODIFIED PREFORMED JOINT STRIP SEAL
STRUCTURE NOS. 099-8312 (EB) & 099-8313 (WB)

SHEET SA-60 OF SA-98 SHEETS

F.A.I. RTE.	SECTION	COUNTY	TOTAL SHEETS	SHEET NO.
I-80	FAI 80 21 STRUCTURE 7	WILL	1059	593

CONTRACT NO. 62R28
ILLINOIS FED. AID PROJECT

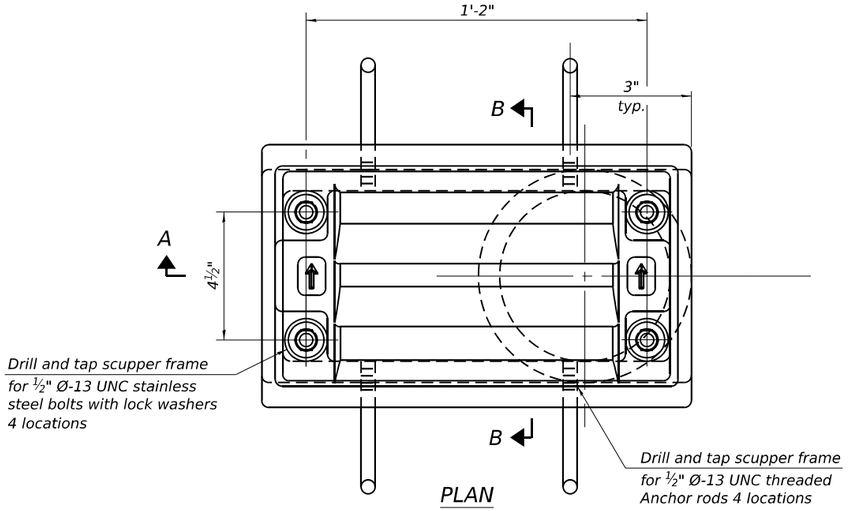

PLAN

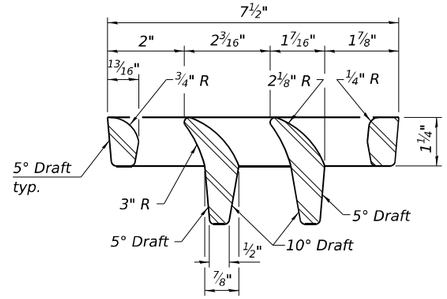

VANE GRATE DETAIL

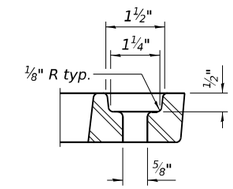

GRATE BOLT HOLE DETAIL

Notes:

All cast iron parts shall be gray iron conforming to the requirements of AASHTO M105, Class 35B and AASHTO M306.

Bolts, anchor rods, nuts and washers shall be according to ASTM A307 and shall be galvanized according to AASHTO M232. As an alternate stainless steel may be used.

Stainless steel hardware shall be according to Article 1006.29(d) of the Standard Specifications.

Structural steel weldments of equal sections and of the same configuration may be substituted for the cast iron scupper frames and downspouts; however, the scupper grates shall remain cast iron. Fillet or full penetration welds shall be used for the weldments. Details shall be submitted to the Engineer for approval.

Structural steel scupper frames and downspouts, when utilized, shall be galvanized according to AASHTO M111.

As an alternate, fiberglass may be used for downspouts according to ASTM D2996 with a short-time rupture strength hoop tensile stress of 30,000 psi min. in lieu of the cast iron or structural steel.

Exterior surfaces of downspouts and exterior exposed surfaces of the scupper frame below deck shall be treated as specified on sheet SA-41.

The Contractor shall take appropriate measures to assure that Protective Coat is not applied to the scupper.

Cost of the grate, frame, downspout, anchor rods, nuts and washers including complete installation of the scupper shall be paid for at the contract unit price for Drainage Scuppers, DS-11.

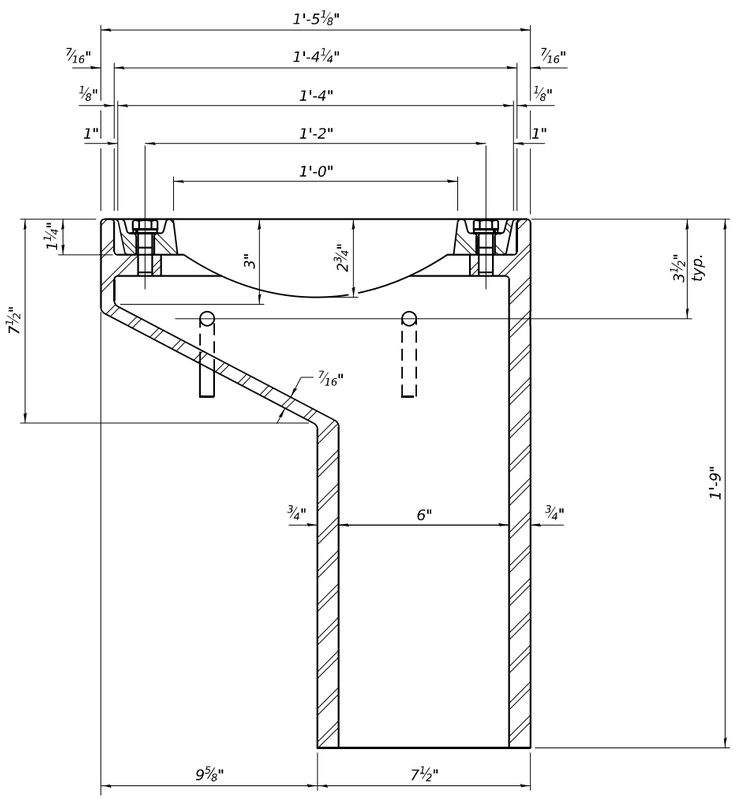

SECTION A-A

See sheet SA-41 for scupper location relative to parapet.

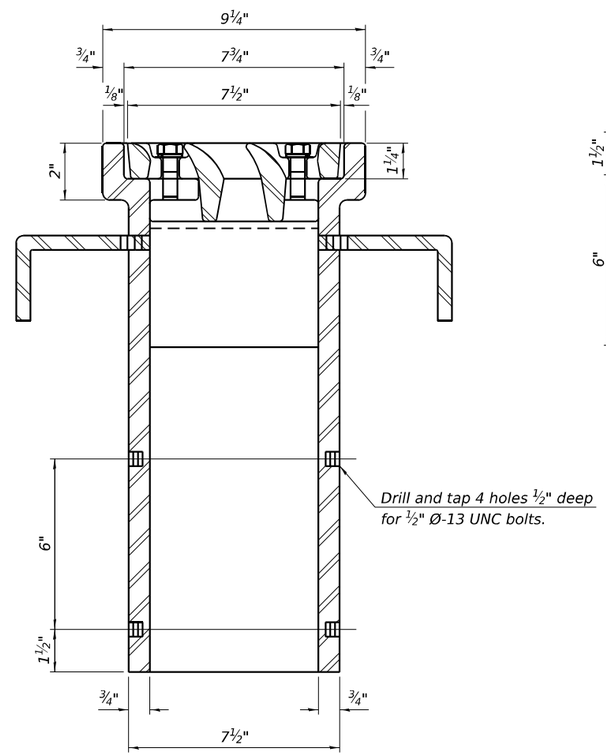

SECTION B-B

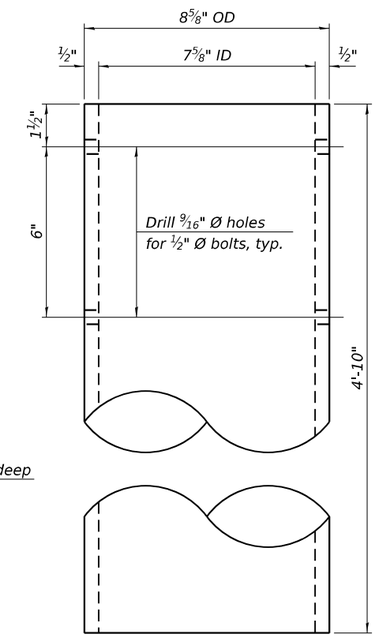

DOWNSPOUT

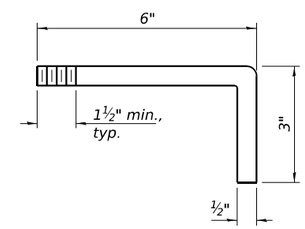

ANCHOR ROD DETAIL

Contractor shall provide appropriate elbows, extensions and/or connections for the drainage scupper such that the horizontal clearance between downspout and PPC Beam is at least 1 inch. Cost of additional elbows, extensions and connections shall be included in the cost of Drainage Scuppers, DS-11. See Sheet SA-36 for details.

S.N. 099-8313 (WB)

BILL OF MATERIAL

ITEM	UNIT	TOTAL
Drainage Scuppers, DS-11	Each	2

MODEL: Default
FILE NAME: pw://transystems-pw.bentley.com:transyscorp-pw1-hosted/Documents/Projects_2018/CH401/401180022/01-Stantec/CAD/ML-04_62R28/04-Sheets/04-Structures/0998312_0998313-ML-04-058A-WB Drainage Scupper.dgn

10/9/2023 3:27:31 PM

HBM ENGINEERING GROUP, LLC

USER NAME =	DESIGNED - JMI	REVISED -	
	CHECKED - MI	REVISED -	
PLOT SCALE =	DRAWN - JMI	REVISED -	
PLOT DATE =	CHECKED - MI	REVISED -	

STATE OF ILLINOIS
DEPARTMENT OF TRANSPORTATION

WB DRAINAGE SCUPPER, DS-11
STRUCTURE NOS. 099-8312 (EB) & 099-8313 (WB)

SHEET SA-61 OF SA-98 SHEETS

F.A.I. RTE.	SECTION	COUNTY	TOTAL SHEETS	SHEET NO.
I-80	FAI 80 21 STRUCTURE 7	WILL	1059	594
		CONTRACT NO. 62R28		
	ILLINOIS	FED. AID PROJECT		

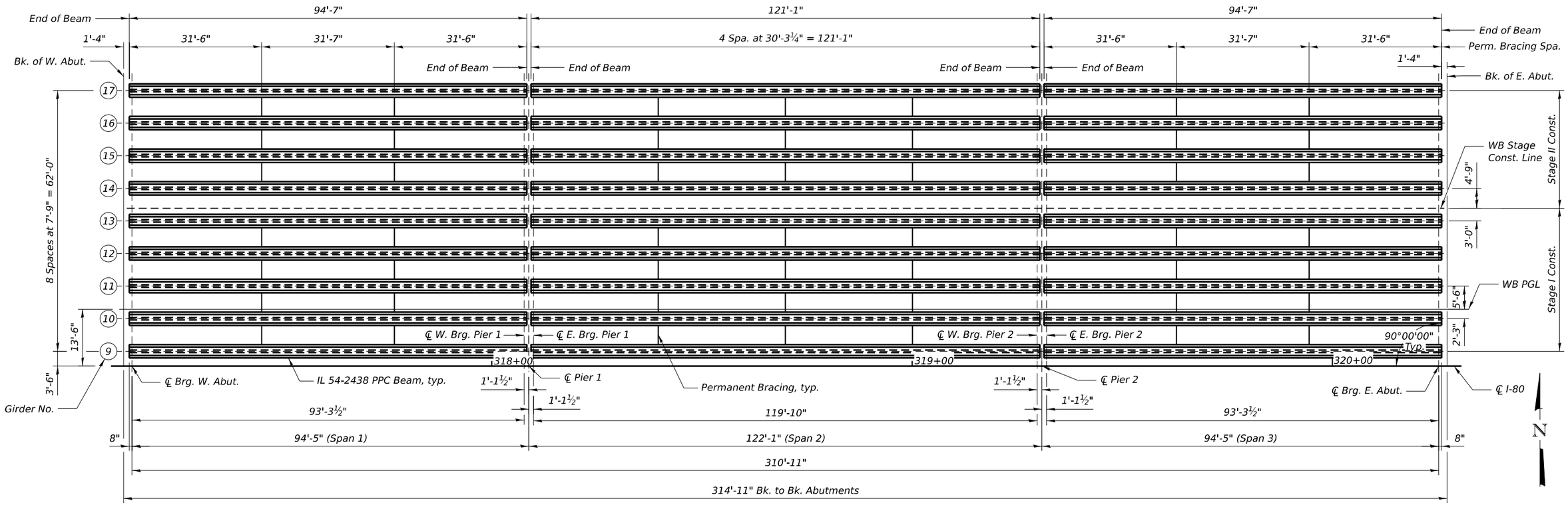

FRAMING PLAN

EXTERIOR BEAM MOMENT TABLE				
		0.4 Sp. 1 0.6 Sp. 3	Pier 1 or 2	0.5 Sp. 2
I	(in^4)	295,427	295,427	295,427
I'	(in^4)	721,953	721,953	721,953
S_b	(in^3)	13,552	13,552	13,552
S_b'	(in^3)	20,333	20,333	20,333
S_t	(in^3)	9,175	9,175	9,175
S_t'	(in^3)	39,039	39,039	39,039
DC1	(k/')	1.728	-	1.728
M_{DC1}	('k)	1,925	0	3,219
DC2	(k/')	0.263	0.263	0.263
M_{DC2}	('k)	157	-315	175
DW	(k/')	0.294	0.294	0.294
M_{DW}	('k)	176	-356	197
LLDF		0.735	0.735	0.735
M_{LL+IM}	('k)	1,575	-1,733	1,681

INTERIOR BEAM MOMENT TABLE				
		0.4 Sp. 1 0.6 Sp. 3	Pier 1 or 2	0.5 Sp. 2
I	(in^4)	295,427	295,427	295,427
I'	(in^4)	738,291	738,291	738,291
S_b	(in^3)	13,552	13,552	13,552
S_b'	(in^3)	20,491	20,491	20,491
S_t	(in^3)	9,175	9,175	9,175
S_t'	(in^3)	41,084	41,084	41,084
DC1	(k/')	1.715	-	1.715
M_{DC1}	('k)	1,912	0	3,196
DC2	(k/')	0.158	0.158	0.158
M_{DC2}	('k)	95	-190	105
DW	(k/')	0.388	0.388	0.388
M_{DW}	('k)	232	-465	257
LLDF		0.679	0.655	0.635
M_{LL+IM}	('k)	1,455	-1,544	1,452

EXTERIOR BEAM REACTION TABLE					
			Abutments	Pier 1 Span 1 Pier 2 Span 3	Pier 1 Span 2 Pier 2 Span 2
	LLDF		0.735	0.735	0.735
	OCF		-	-	-
*	R_{DC1}	(k)	84.4	81.6	105.5
**	R_{DC2}	(k)	9	16	16
**	R_{DW}	(k)	10.3	18.1	18.1
**	R_{LL+IM}	(k)	82.2	77.3	77.3
	R_{Total} (Strength I)(Impact)	(k)	272.6	284.4	314.3
	R_{Total} (Strength I)(No Impact)	(k)	245.8	264.0	293.8

INTERIOR BEAM REACTION TABLE					
			Abutments	Pier 1 Span 1 Pier 2 Span 3	Pier 1 Span 2 Pier 2 Span 2
	LLDF		0.797	0.797	0.797
	OCF		-	-	-
*	R_{DC1}	(k)	83.9	81	104.7
**	R_{DC2}	(k)	5.5	9.6	9.6
**	R_{DW}	(k)	13.6	23.8	23.8
**	R_{LL+IM}	(k)	89.2	83.8	83.8
	R_{Total} (Strength I)(Impact)	(k)	284.6	295.6	325.2
	R_{Total} (Strength I)(No Impact)	(k)	255.4	273.4	303.0

* Includes dead load reaction of approach slab with approach parapets

** At continuous piers, reactions from composite loads are assumed to be equally distributed to each bearing line.

I: Non-composite moment of inertia of beam section ($in.^4$).
I': Composite moment of inertia of beam section ($in.^4$).
S_b: Non-composite section modulus for the bottom fiber of the prestressed beam ($in.^3$).
S_b': Composite section modulus for the bottom fiber of the prestressed beam ($in.^3$).
S_t: Non-composite section modulus for the top fiber of the prestressed beam ($in.^3$).
S_t': Composite section modulus for the top fiber of the prestressed beam ($in.^3$).
DC1: Un-factored non-composite dead load (kips/ft.).
M_{DC1}: Un-factored moment due to non-composite dead load (kip-ft.).
DC2: Un-factored long-term composite (superimposed excluding future wearing surface) dead load (kips/ft.).
M_{DC2}: Un-factored moment due to long-term composite (superimposed excluding future wearing surface) dead load (kip-ft.).
DW: Un-factored long-term composite (superimposed future wearing surface only) dead load (kips/ft.).
M_{DW}: Un-factored moment due to long-term composite (superimposed future wearing surface only) dead load (kip-ft.).
LLDF: Live Load Distribution Factor for moment and shear computed according to Article 4.6.2.2 and further IDOT provisions.
M_{LL+IM}: Un-factored live load moment plus dynamic load allowance (impact) (kip-ft.).
OCF: Obtuse Correction Factor computed according to Article 4.6.2.2.3c or as further simplified by IDOT provisions.
R_{DC1}: Un-factored reaction due to non-composite dead load (kip).
R_{DC2}: Un-factored reaction due to long-term composite (superimposed excluding future wearing surface) dead load (kip).
R_{DW}: Un-factored reaction due to long-term composite (superimposed future wearing surface only) dead load (kip).
R_{LL}: Un-factored live load reaction (kip).
R_{IM}: Un-factored dynamic load allowance (impact) (kip).
R_{Total} (Strength I)(Impact): Total factored reaction including dynamic load allowance (impact) kip).
R_{Total} (Strength I)(No Impact): Total factored reaction not including dynamic load allowance (impact) (kip).

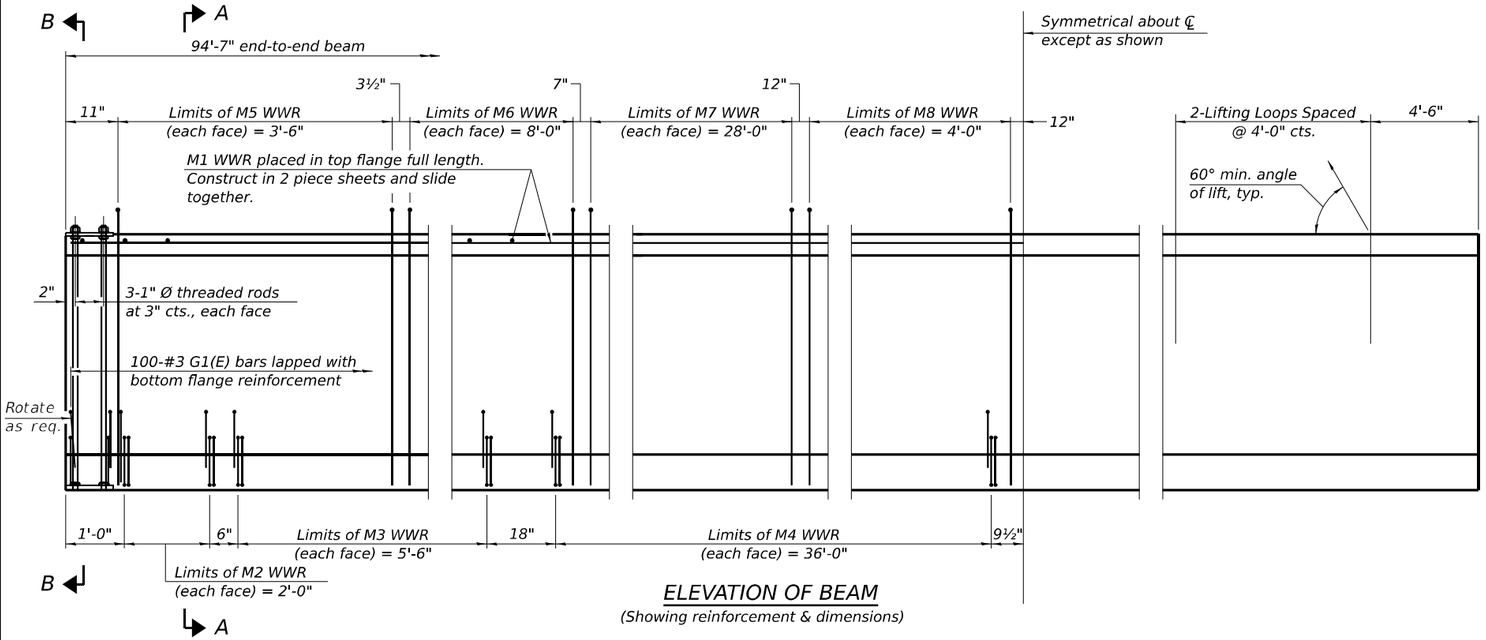

ELEVATION OF BEAM

(Showing reinforcement & dimensions)

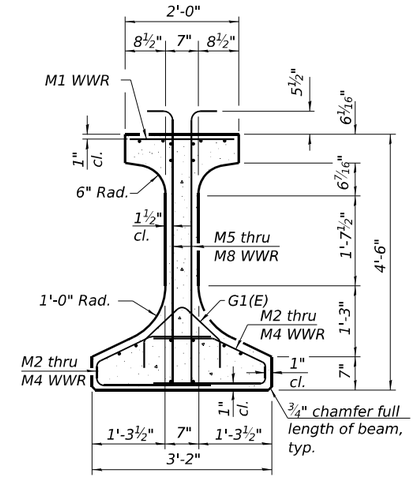

SECTION A-A

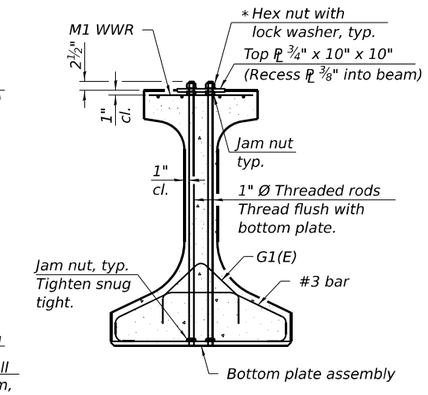

SECTION B-B

* Only tighten sufficiently to compress lock washers

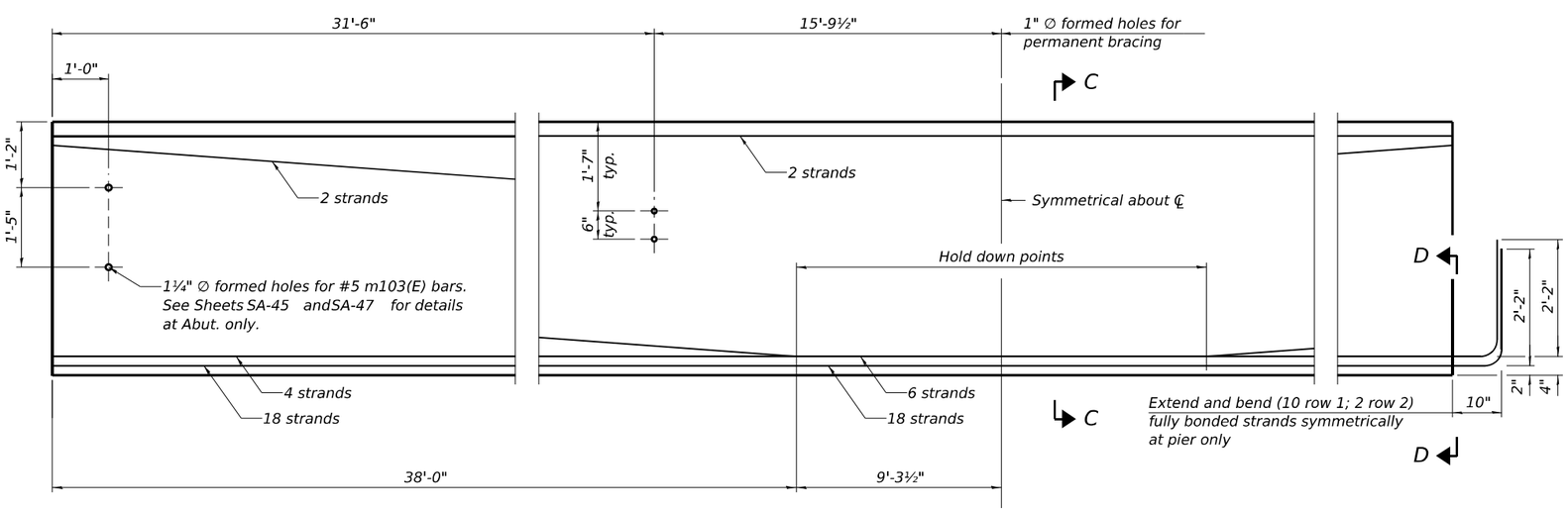

ELEVATION OF BEAM

(Showing prestressing steel)

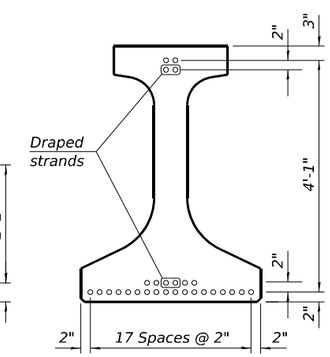

SECTION C-C

(26-0.6" Ø 270 ksi strands)

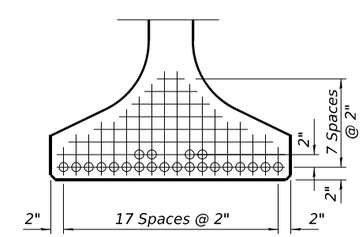

VIEW D-D

○ Fully bonded strand

▲ Partially debonded strand

NOTE:

1. See Sheet SA-65 for additional details and Bill of Material.

IL54-2438 8-13-2021

USER NAME =	DESIGNED - JJS, PG	REVISED -	
	CHECKED - MI	REVISED -	
PLOT SCALE =	DRAWN - JJS	REVISED -	
PLOT DATE =	CHECKED - MI	REVISED -	

HBM ENGINEERING GROUP, LLC

STATE OF ILLINOIS
DEPARTMENT OF TRANSPORTATION

WB I-80 IL54-2438 PPC I-BEAM (SPANS 1 AND 3)
STRUCTURE NOS. 099-8312 (EB) & 099-8313 (WB)

SHEET SA-63 OF SA-98 SHEETS

F.A.I. RTE.	SECTION	COUNTY	TOTAL SHEETS	SHEET NO.
I-80	FAI 80 21 STRUCTURE 7	WILL	1059	596
		CONTRACT NO. 62R28		
	ILLINOIS	FED. AID PROJECT		

MODEL: Default
FILE NAME: pw://transystems-pw.bentley.com:transyscorp-pw1-hosted/Documents/Projects_2018/CH401/401180022/01-Stantec/CAD/ML-04_62R28/04-Sheets/04-Structures/0998312_0998313-ML-04-060-WB IL54-2438 PPC I-Beam (Spans 1 and 3).dgn
10/9/2023 3:28:15 PM

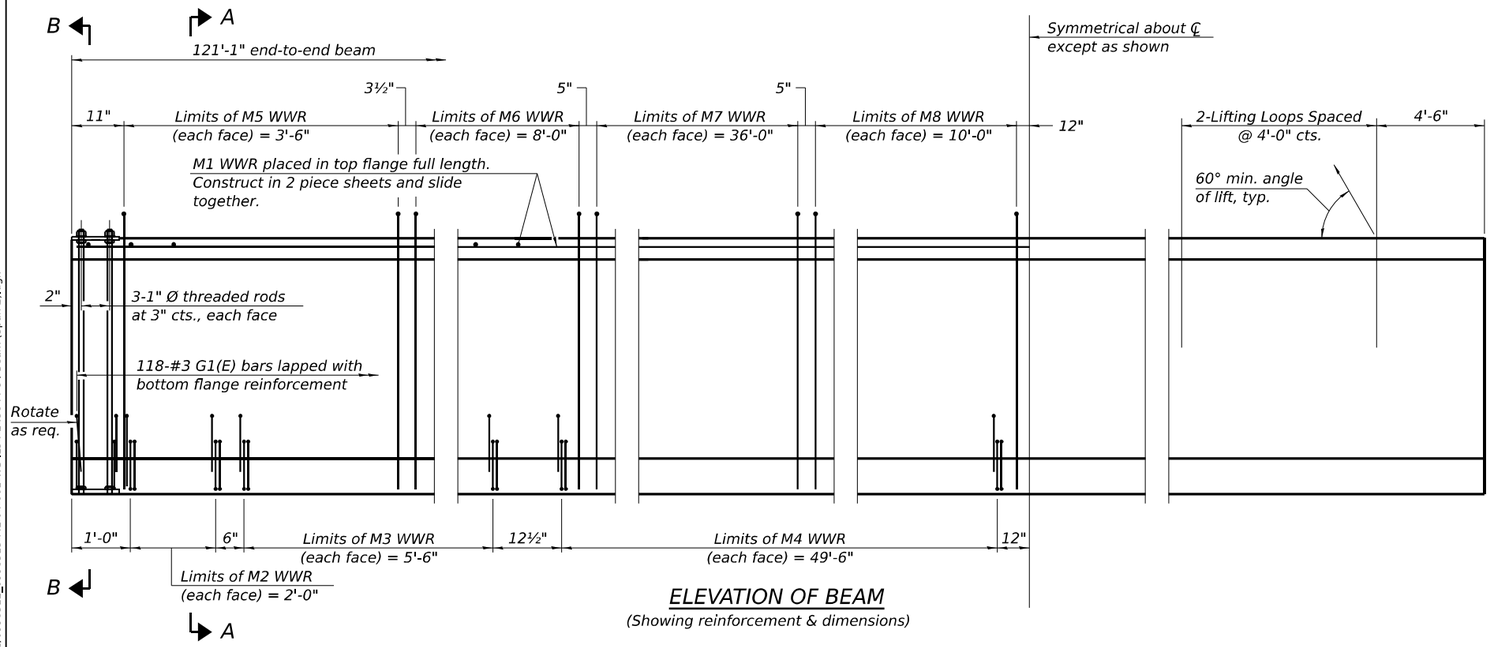

ELEVATION OF BEAM
(Showing reinforcement & dimensions)

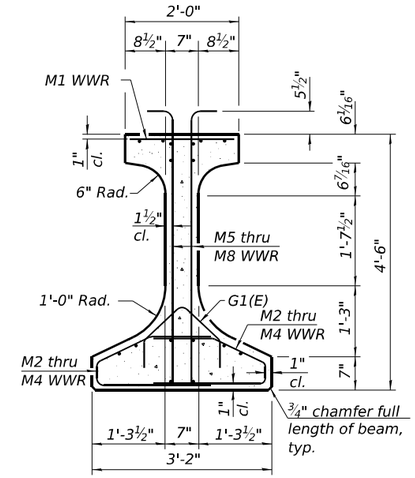

SECTION A-A

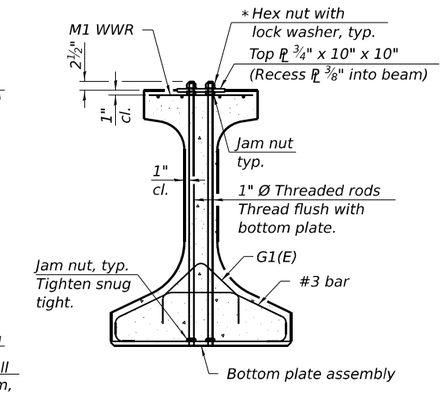

SECTION B-B

∗ Only tighten sufficiently to compress lock washers

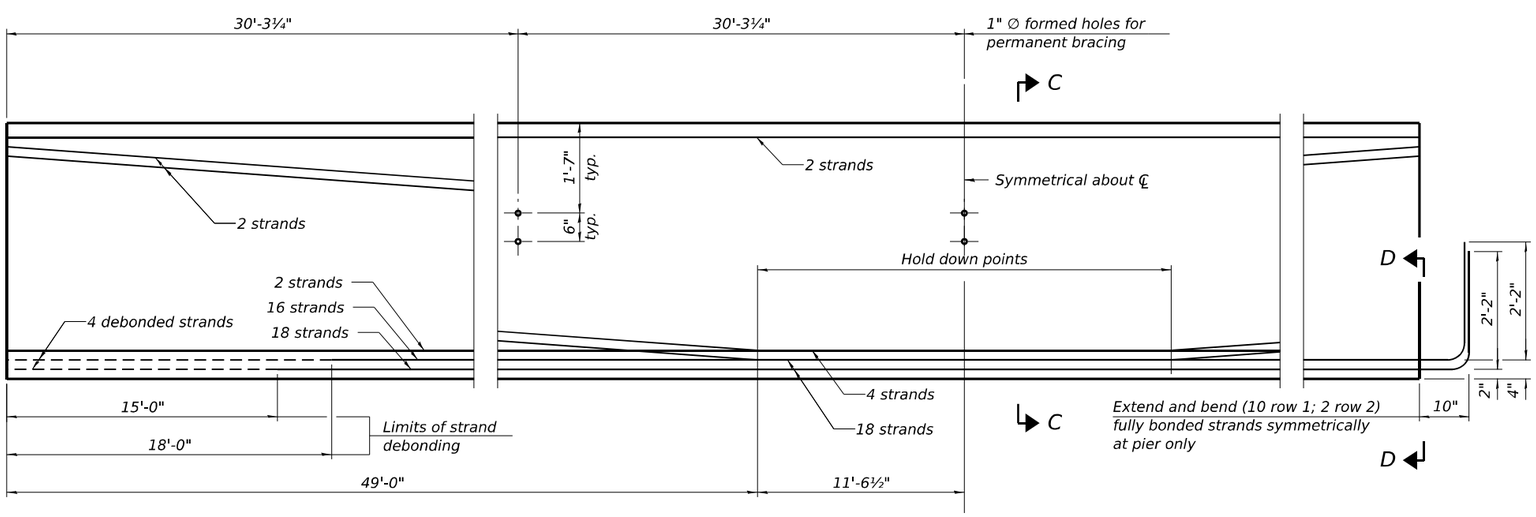

ELEVATION OF BEAM
(Showing prestressing steel)

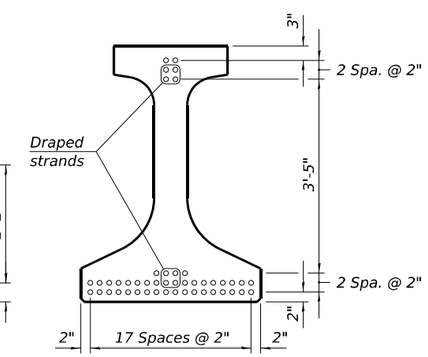

SECTION C-C
(42-0.6" Ø 270 ksi strands)

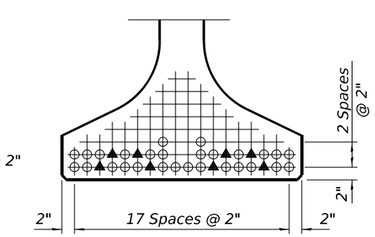

VIEW D-D

○ Fully bonded strand

▲ Partially debonded strand

NOTE:

1. See Sheet SA-65 for additional details and Bill of Material.

IL54-2438 8-13-2021

HBM ENGINEERING GROUP, LLC	USER NAME =	DESIGNED - JJS, PG	REVISED -	STATE OF ILLINOIS DEPARTMENT OF TRANSPORTATION	WB I-80 IL54-2438 PPC I-BEAM (SPAN 2) STRUCTURE NOS. 099-8312 (EB) & 099-8313 (WB)	F.A.I. RTE. I-80	SECTION FAI 80 21 STRUCTURE 7
		CHECKED - MI	REVISED -			COUNTY WILL	TOTAL SHEETS 1059
	PLOT SCALE =	DRAWN - JJS	REVISED -			SHEET NO. 597	CONTRACT NO. 62R28
	PLOT DATE =	CHECKED - MI	REVISED -		SHEET SA-64 OF SA-98 SHEETS	ILLINOIS	FED. AID PROJECT

MODEL: Default
FILE NAME: pw://transystems-pw.bentley.com:transyscorp-pw1-hosted/Documents/Projects_2018/CH401/401180022/01-Stantec/CAD/ML-04_62R28/04-Sheets/04-Structures/0998312_0998313-ML-04-061-WB IL54-2438 PPC I-Beam (Span 2).dgn
10/9/2023 3:28:17 PM

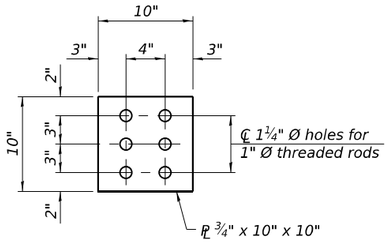

PLAN - TOP PLATE

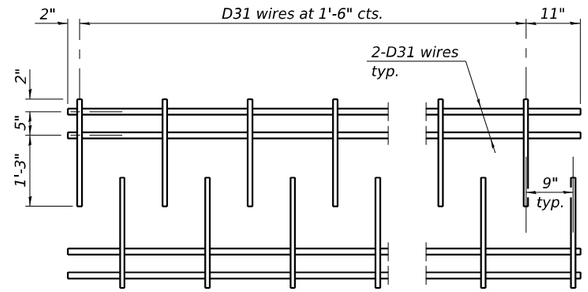

M1 WWR DETAIL

When multiple sheets of M1 WWR are required along the beam length, #5(E) bars (5'-0" long) shall be used to splice the longitudinal D31 wires together (Min. Lap 2'-2").

NOTES

Inserts for ¾" Ø threaded dowel rods, when specified, are to be two strut, ferrule type for interior beams and single ferrule, flared loop type for exterior beams.

Prestressing steel shall be uncoated high strength, low relaxation 7-wire strand, Grade 270. The nominal diameter for beam strands shall be 0.6" and the nominal cross-sectional area shall be 0.217 sq. in. The nominal diameter for lifting loops shall be ½" and the nominal cross sectional area shall be 0.153 sq. in.

The beams shall have a final concrete compressive strength, f'c, of 8500 psi and a release concrete compressive strength, f'ci, of 6500 psi.

A minimum 2½" Ø lifting pin shall be used to engage the lifting loops during handling.

Bend the extended strands inward on the fascia beams to maintain 1½" clearance inside the pier diaphragm.

The top and bottom plates shall be AASHTO M270 Grade 50.

The top plates and bottom plate assemblies shall be galvanized according to AASHTO M111. The threaded rods, nuts and washers shall be galvanized according to AASHTO M232.

Threaded rods shall be ASTM F 1554 Grade 55.

Welded Wire Reinforcement (WWR) shall conform to ASTM A884 with a Class A, Type 1 epoxy coating or ASTM A1060, Table 3 galvanized coating.

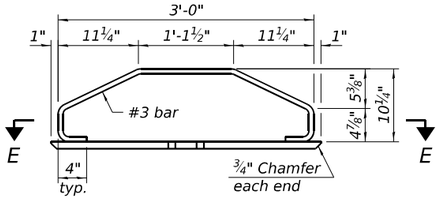

ELEVATION - BOTTOM PLATE ASSEMBLY

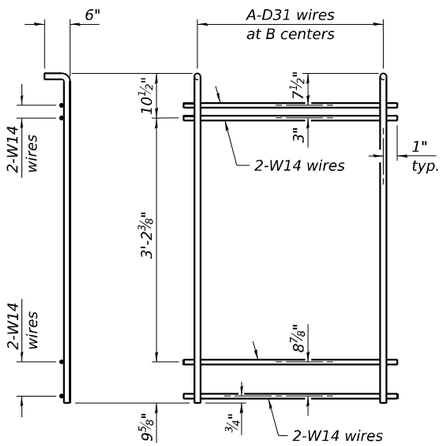

M5 THRU M8 WWR DETAIL

(See Table of Dimensions)

TABLE OF DIMENSIONS

(The WWR designs assume grade 60. If necessary, this permits the fabricator to directly substitute grade 60 rebar as detailed in the Manual for Fabrication of Precast Prestressed Concrete Products.)

SPAN 1 & 3

WWR	A	B
M2	9	3"
M3	12	6"
M4	25	1'-6"
M5	15	3"
M6	17	6"
M7	29	1'-0"
M8	3	2'-0"

SPAN 2

WWR	A	B
M2	9	3"
M3	12	6"
M4	34	1'-6"
M5	15	3"
M6	17	6"
M7	37	1'-0"
M8	6	2'-0"

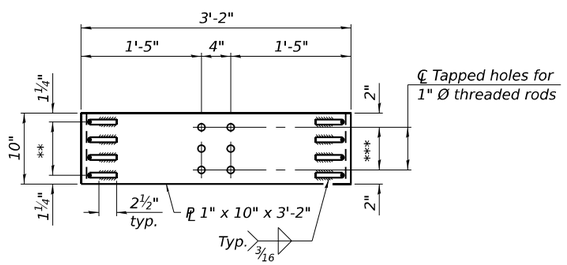

SECTION E-E

** 3 Spaces at 2½" = 7½"

*** 2 Spaces at 3" = 6"

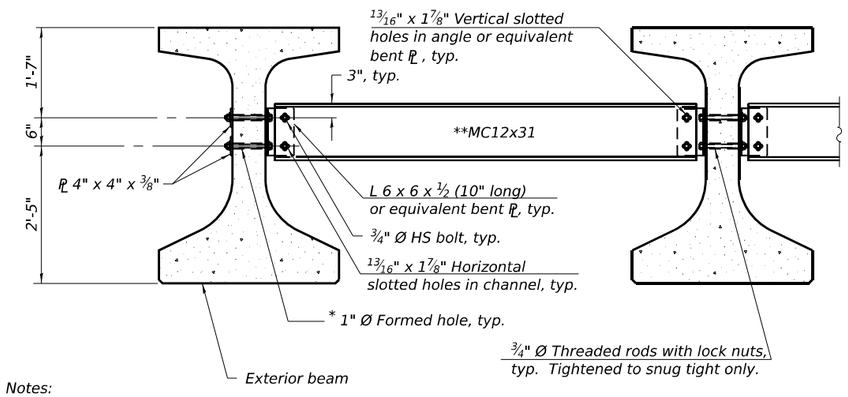

Notes:

All material for bracing shall be hot dip galvanized according to AASHTO M111 unless otherwise noted.

Two hardened washers are required for each set of oversized holes.

All holes shall be 15/16" Ø unless otherwise noted.

5/16" x 3" x 3" plate washers are required over all slotted holes.

All bolts, threaded rods, and hardware shall be galvanized according to AASHTO M232.

Threaded rods shall be ASTM F 1554 Grade 55.

Bracing shall be installed as beams are erected and tightened as soon as possible during erection.

Permanent bracing shall not be paid for separately, but shall be included in the cost of Furnishing and Erecting Precast Prestressed Concrete Beams.

* Fabricator shall locate to miss strands within permissible tolerances.

**Alternate MC12x35 channels are permitted to facilitate material acquisition.

PERMANENT BRACING DETAILS FOR IL54 BEAMS

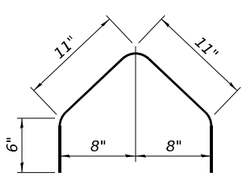

BAR G1(E)

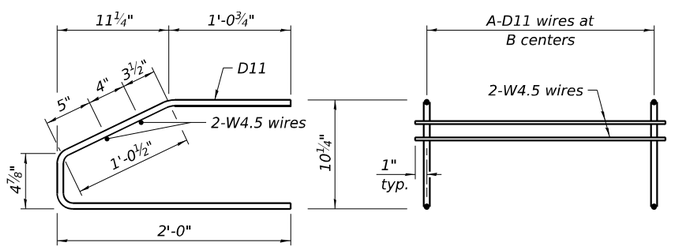

M2 THRU M4 WWR DETAIL

(See Table of Dimensions)

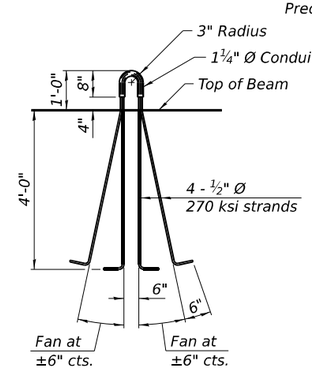

LIFTING LOOP DETAIL

S.N. 099-8313 (WB) PPC I-BEAM BILL OF MATERIAL

Item	Unit	Total
Furnishing And Erecting Precast Prestressed Concrete Beams, IL54N	Ft.	2793

MODEL: Default
FILE NAME: pw://transystems-pw.bentley.com:transyscorp-pw1-hosted/Documents/Projects_2018/CH401/401180022/01-Stantec/CAD/ML-04_62R28/04-Sheets/04-Structures/0998312_0998313-ML-04-062-WB IL54-2438 PPC I-Beam Details.dgn

HBM ENGINEERING GROUP, LLC

USER NAME =	DESIGNED - JJS, PG	REVISED -
	CHECKED - MI	REVISED -
PLOT SCALE =	DRAWN - JJS	REVISED -
PLOT DATE =	CHECKED - MI	REVISED -

STATE OF ILLINOIS
DEPARTMENT OF TRANSPORTATION

WB I-80 IL54-2438 PPC I-BEAM DETAILS
STRUCTURE NOS. 099-8312 (EB) & 099-8313 (WB)

SHEET SA-65 OF SA-98 SHEETS

F.A.I. RTE.	SECTION	COUNTY	TOTAL SHEETS	SHEET NO.
I-80	FAI 80 21 STRUCTURE 7	WILL	1059	598
		CONTRACT NO. 62R28		
	ILLINOIS	FED. AID PROJECT		

10/9/2023 3:28:19 PM

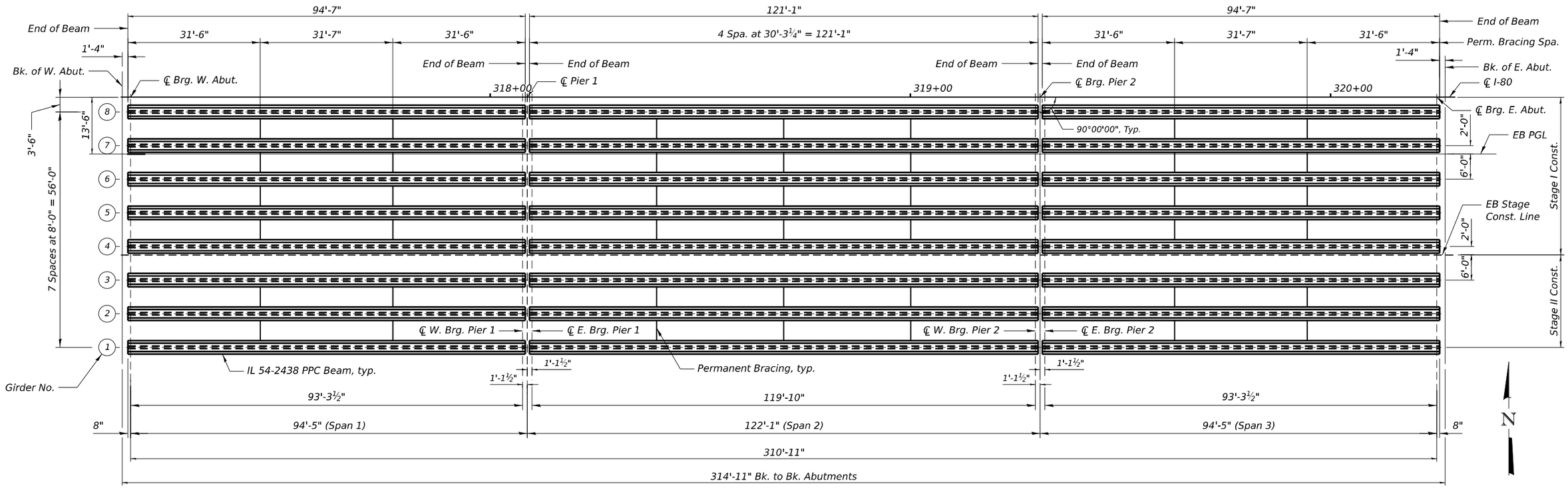

FRAMING PLAN

EXTERIOR BEAM MOMENT TABLE				
		0.4 Sp. 1 0.6 Sp. 3	Pier 1 or 2	0.5 Sp. 2
I	(in^4)	295,427	295,427	295,427
I'	(in^4)	726,485	726,485	726,485
S_b	(in^3)	13,552	13,552	13,552
S_b'	(in^3)	20,377	20,377	20,377
S_t	(in^3)	9,175	9,175	9,175
S_t'	(in^3)	39,595	39,595	39,595
$DC1$	(k/')	1.740	-	1.740
M_{DC1}	('k)	1,934	0	3,124
$DC2$	(k/')	0.263	0.263	0.263
M_{DC2}	('k)	157	-315	175
DW	(k/')	0.300	0.300	0.300
M_{DW}	('k)	179	-363	201
$LLDF$		0.750	0.750	0.750
M_{LL+IM}	('k)	1,607	-1,769	1,715

INTERIOR BEAM MOMENT TABLE				
		0.4 Sp. 1 0.6 Sp. 3	Pier 1 or 2	0.5 Sp. 2
I	(in^4)	295,427	295,427	295,427
I'	(in^4)	746,891	746,891	746,891
S_b	(in^3)	13,552	13,552	13,552
S_b'	(in^3)	20,573	20,573	20,573
S_t	(in^3)	9,175	9,175	9,175
S_t'	(in^3)	42,209	42,209	42,209
$DC1$	(k/')	1.740	-	1.740
M_{DC1}	('k)	1,934	0	3,124
$DC2$	(k/')	0.158	0.158	0.158
M_{DC2}	('k)	95	-190	105
DW	(k/')	0.400	0.400	0.400
M_{DW}	('k)	242	-484	268
$LLDF$		0.695	0.670	0.649
M_{LL+IM}	('k)	1,489	-1,580	1,484

EXTERIOR BEAM REACTION TABLE					
			Abutments	Pier 1 Span 1 Pier 2 Span 3	Pier 1 Span 2 Pier 2 Span 2
	$LLDF$		0.750	0.750	0.750
	OCF		-	-	-
*	R_{DC1}	(k)	86.1	83	106
**	R_{DC2}	(k)	9	16	16
**	R_{DW}	(k)	10.5	18.4	18.4
**	R_{LL+IM}	(k)	84	79	79
	R_{Total} (Strength I)(Impact)	(k)	277.8	289.6	318.4
	R_{Total} (Strength I)(No Impact)	(k)	250.2	268.8	297.35

INTERIOR BEAM REACTION TABLE					
			Abutments	Pier 1 Span 1 Pier 2 Span 3	Pier 1 Span 2 Pier 2 Span 2
	$LLDF$		0.814	0.814	0.814
	OCF		-	-	-
*	R_{DC1}	(k)	85.1	81.8	104.9
**	R_{DC2}	(k)	5.5	9.6	9.6
**	R_{DW}	(k)	14.0	24.5	24.5
**	R_{LL+IM}	(k)	91.1	85.6	85.6
	R_{Total} (Strength I)(Impact)	(k)	289.6	300.8	329.7
	R_{Total} (Strength I)(No Impact)	(k)	259.8	276.7	305.6

* Includes dead load reaction of approach slab and approach parapets

** At continuous piers, reactions from composite loads are assumed to be equally distributed to each bearing line.

I: Non-composite moment of inertia of beam section ($in.^4$).
I': Composite moment of inertia of beam section ($in.^4$).
S_b: Non-composite section modulus for the bottom fiber of the prestressed beam ($in.^3$).
S_b': Composite section modulus for the bottom fiber of the prestressed beam ($in.^3$).
S_t: Non-composite section modulus for the top fiber of the prestressed beam ($in.^3$).
S_t': Composite section modulus for the top fiber of the prestressed beam ($in.^3$).
$DC1$: Un-factored non-composite dead load (kips/ft.).
M_{DC1}: Un-factored moment due to non-composite dead load (kip-ft.).
$DC2$: Un-factored long-term composite (superimposed excluding future wearing surface) dead load (kips/ft.).
M_{DC2}: Un-factored moment due to long-term composite (superimposed excluding future wearing surface) dead load (kip-ft.).
DW: Un-factored long-term composite (superimposed future wearing surface only) dead load (kips/ft.).
M_{DW}: Un-factored moment due to long-term composite (superimposed future wearing surface only) dead load (kip-ft.).
$LLDF$: Live Load Distribution Factor for moment and shear computed according to Article 4.6.2.2 and further IDOT provisions.
M_{LL+IM}: Un-factored live load moment plus dynamic load allowance (impact) (kip-ft.).
OCF: Obtuse Correction Factor computed according to Article 4.6.2.2.3c or as further simplified by IDOT provisions.
R_{DC1}: Un-factored reaction due to non-composite dead load (kip).
R_{DC2}: Un-factored reaction due to long-term composite (superimposed excluding future wearing surface) dead load (kip).
R_{DW}: Un-factored reaction due to long-term composite (superimposed future wearing surface only) dead load (kip).
R_{LL}: Un-factored live load reaction (kip).
R_{IM}: Un-factored dynamic load allowance (impact) (kip).
R_{Total} (Strength I)(Impact): Total factored reaction including dynamic load allowance (impact) kip).
R_{Total} (Strength I)(No Impact): Total factored reaction not including dynamic load allowance (impact) (kip).

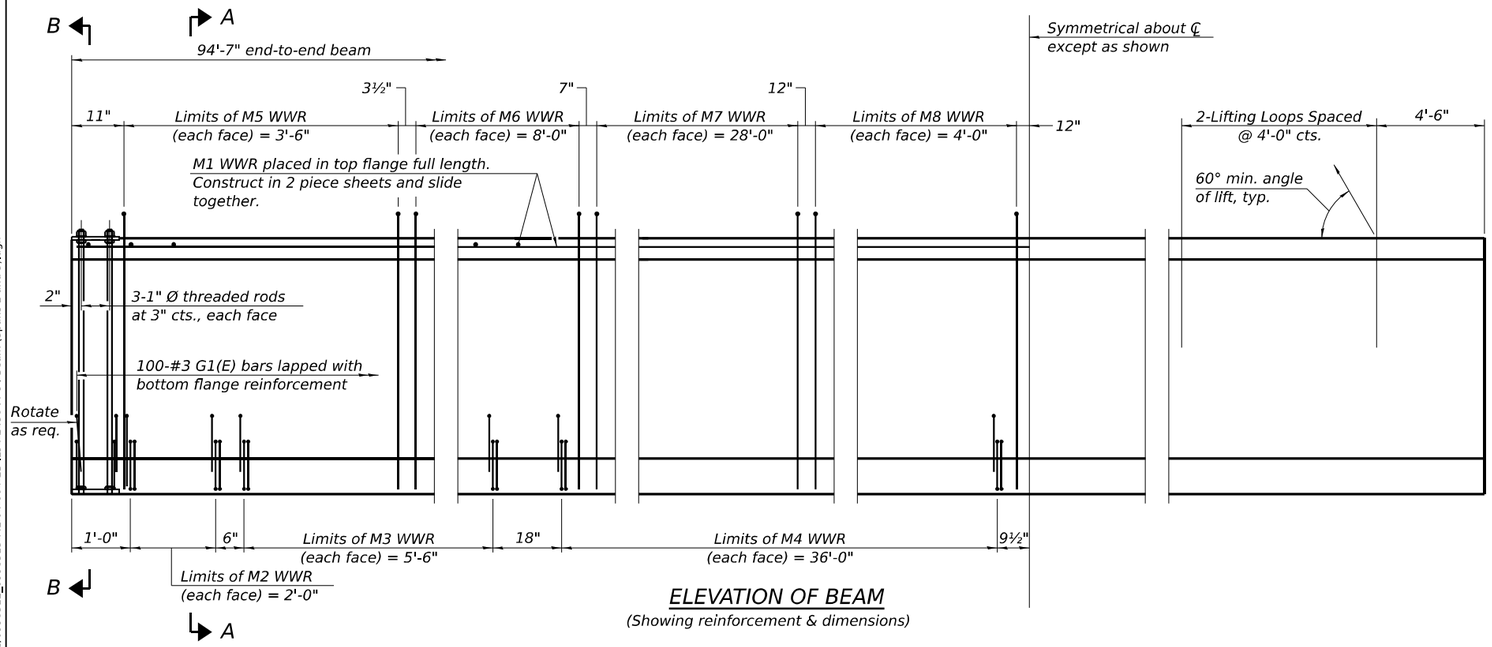

ELEVATION OF BEAM
(Showing reinforcement & dimensions)

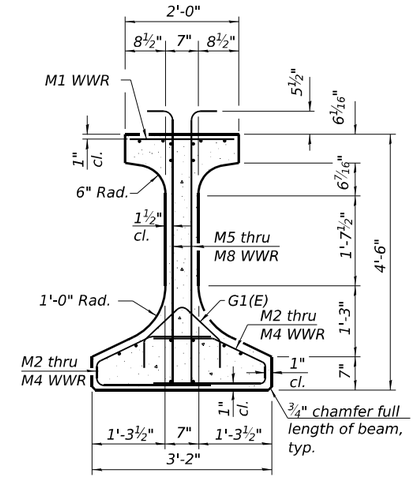

SECTION A-A

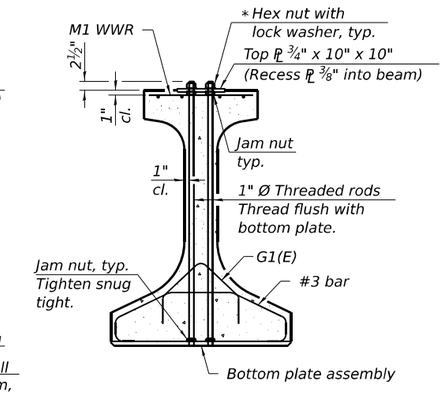

SECTION B-B
* Only tighten sufficiently to compress lock washers

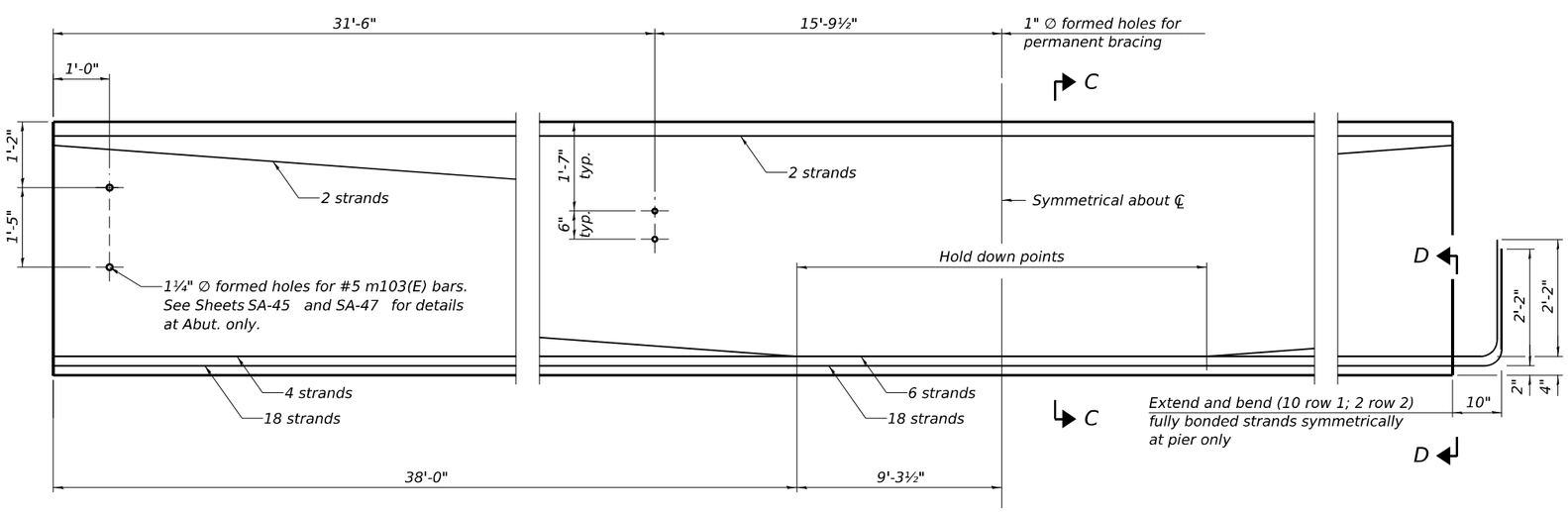

ELEVATION OF BEAM
(Showing prestressing steel)

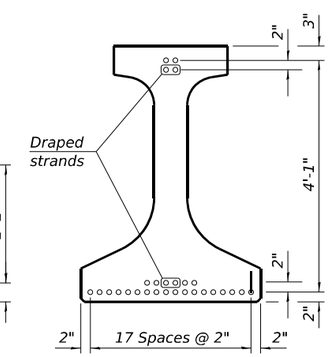

SECTION C-C
(26-0.6" Ø 270 ksi strands)

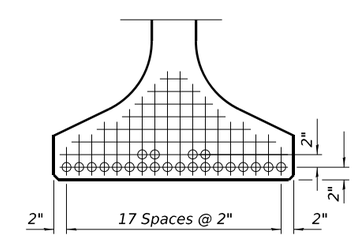

VIEW D-D
○ Fully bonded strand

▲ Partially debonded strand

NOTE:
1. See Sheet SA-69 for additional details and Bill of Material.

IL54-2438 8-13-2021

HBM ENGINEERING GROUP, LLC	USER NAME =	DESIGNED - JJS, PG	REVISED -
		CHECKED - MI	REVISED -
	PLOT SCALE =	DRAWN - JJS	REVISED -
	PLOT DATE =	CHECKED - MI	REVISED -

STATE OF ILLINOIS
DEPARTMENT OF TRANSPORTATION

EB I-80 IL54-2438 PPC I-BEAM (SPANS 1 AND 3)
STRUCTURE NOS. 099-8312 (EB) & 099-8313 (WB)

SHEET SA-67 OF SA-98 SHEETS

F.A.I. RTE.	SECTION	COUNTY	TOTAL SHEETS	SHEET NO.
I-80	FAI 80 21 STRUCTURE 7	WILL	1059	600
		CONTRACT NO. 62R28		
	ILLINOIS	FED. AID PROJECT		

MODEL: Default
FILE NAME: pw://transystems-pw.bentley.com:transyscorp-pw1-hosted/Documents/Projects_2018/CH401/401180022/01-Stantec/CAD/ML-04_62R28/04-Sheets/04-Structures/0998312_0998313-ML-04-064-EB IL54-2438 PPC I-Beam (Spans 1 and 3).dgn
10/9/2023 3:28:28 PM