LEGEND

- PROPOSED SIGN
- (X) PROPOSED GUIDE SIGN
- S10-1 SIGN DESIGNATION, SEE SIGN SCHEDULE, SHEET 279 TO 281.
- STANDARD ORANGE FLAG, COST IS INCLUDED IN THE COST OF THE SIGN PANEL.
- ONE-WAY AMBER MARKER
- TWO-WAY AMBER MARKER
- ONE-WAY CRYSTAL MARKER

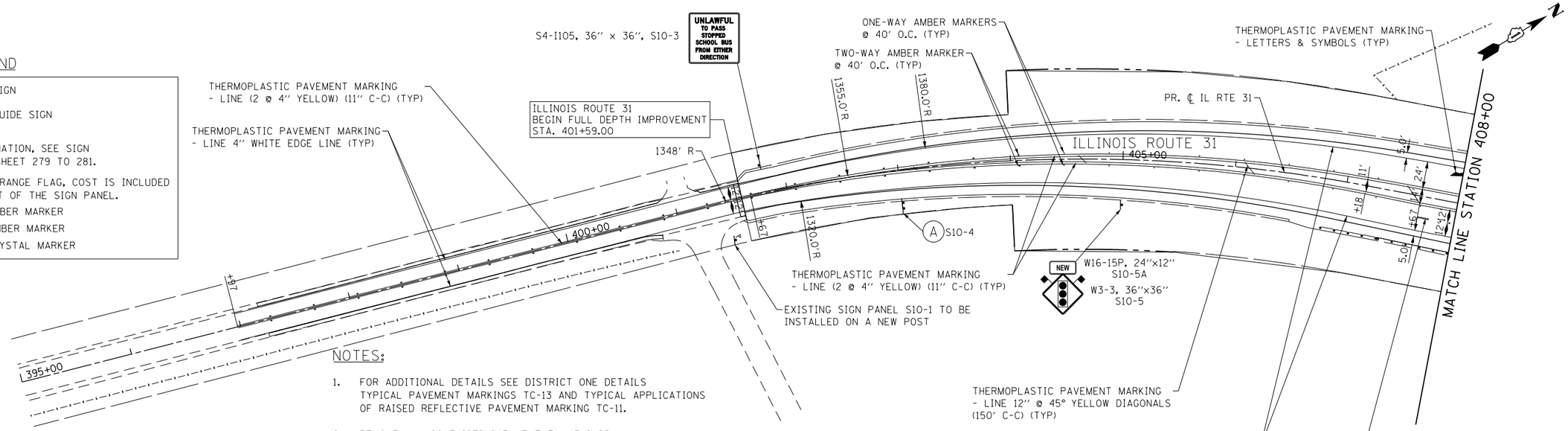

NOTES:

1. FOR ADDITIONAL DETAILS SEE DISTRICT ONE DETAILS TYPICAL PAVEMENT MARKINGS TC-13 AND TYPICAL APPLICATIONS OF RAISED REFLECTIVE PAVEMENT MARKING TC-11.
2. REMOVE ALL CONFLICTING PAVEMENT MARKINGS.
3. A MINIMUM DISTANCE OF 4 FEET SHALL BE MAINTAINED BETWEEN THE EDGE OF A 6" CROSSWALK LINE AND THE EDGE OF A 24" STOP BAR.
4. FOR STATION, OFFSET, AND SIZE DETAILS, SEE SIGN SCHEDULES, SHEETS 303 TO 304 .

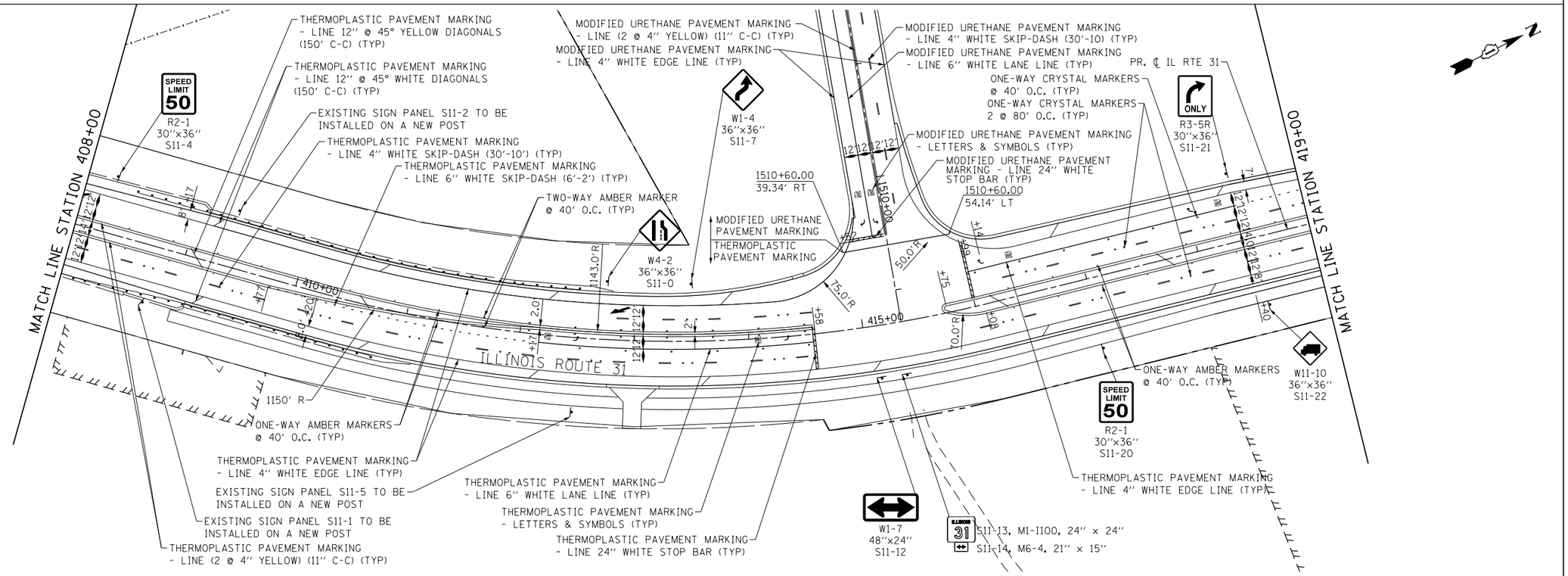

USER NAME = CEComin	DESIGNED - BSH	REVISED -	
	DRAWN - MLB	REVISED -	
PLOT SCALE = 100.0000 ' / in.	CHECKED - MFD	REVISED -	
PLOT DATE = 10/5/2017	DATE - 8/7/2017	REVISED -	

TranSystems

STATE OF ILLINOIS
DEPARTMENT OF TRANSPORTATION

IL ROUTE 31
PAVEMENT MARKING AND SIGNING PLAN

SCALE: 1" = 50' | SHEET 301 OF 611 SHEETS | STA. 394+00 TO STA. 419+00

F.A.P. RTE.	SECTION	COUNTY	TOTAL SHEETS	SHEET NO.
2298	16-00215-11-PV	KANE	611	301

CONTRACT NO. 61E05

FED. ROAD DIST. NO. 1 | ILLINOIS | FED. AID PROJECT

FILE NAME = G:\CHI3\0189\Road\Sheets - B2 Contract\20131894-SHT-PMK-03.dgn

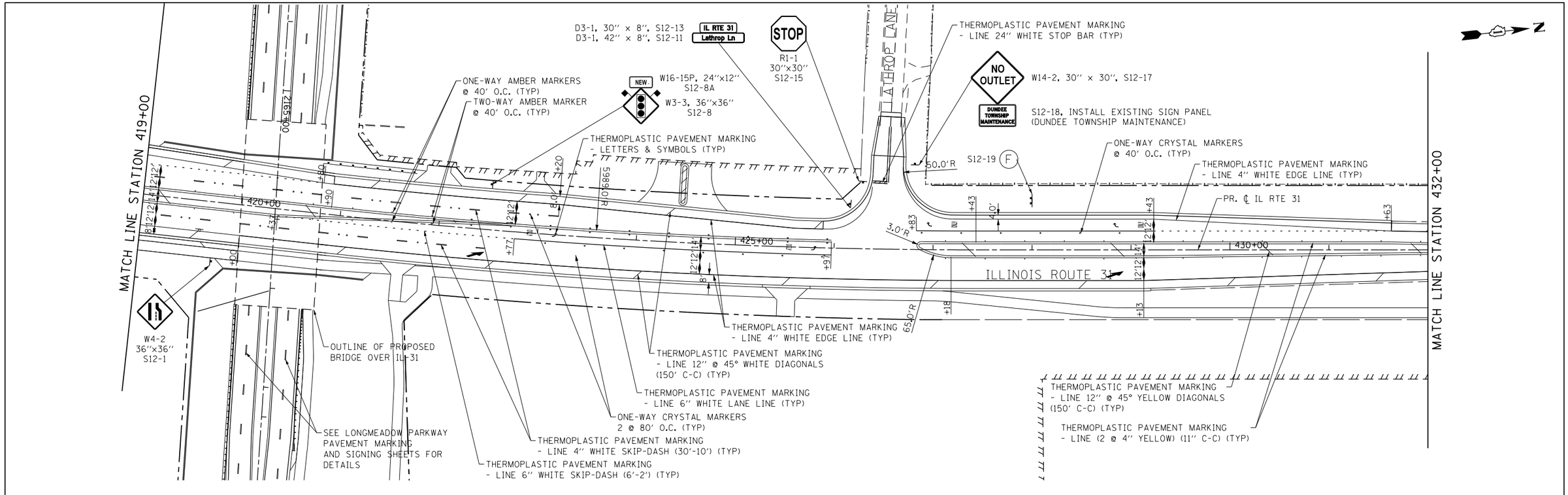

NOTES:

1. FOR ADDITIONAL DETAILS SEE DISTRICT ONE DETAILS TYPICAL PAVEMENT MARKINGS TC-13 AND TYPICAL APPLICATIONS OF RAISED REFLECTIVE PAVEMENT MARKING TC-11.
2. REMOVE ALL CONFLICTING PAVEMENT MARKINGS.
3. A MINIMUM DISTANCE OF 4 FEET SHALL BE MAINTAINED BETWEEN THE EDGE OF A 6" CROSSWALK LINE AND THE EDGE OF A 24" STOP BAR.
4. FOR STATION, OFFSET, AND SIZE DETAILS, SEE SIGN SCHEDULES, SHEETS 303 TO 304.

LEGEND

- PROPOSED SIGN
- (X) PROPOSED GUIDE SIGN
- S10-1 SIGN DESIGNATION, SEE SIGN SCHEDULE, SHEET 279 TO 281.
- STANDARD ORANGE FLAG, COST IS INCLUDED IN THE COST OF THE SIGN PANEL.
- ONE-WAY AMBER MARKER
- TWO-WAY AMBER MARKER
- ONE-WAY CRYSTAL MARKER

USER NAME = CEComin	DESIGNED - BSH	REVISED -	
	DRAWN - MLB	REVISED -	
PLOT SCALE = 100.0000 ' / in.	CHECKED - MFD	REVISED -	
PLOT DATE = 10/5/2017	DATE - 8/7/2017	REVISED -	

TranSystems

STATE OF ILLINOIS
DEPARTMENT OF TRANSPORTATION

IL ROUTE 31
PAVEMENT MARKING AND SIGNING PLAN

SCALE: 1" = 50' | SHEET 302 OF 611 SHEETS | STA. 419+00 TO STA. 445+00

F.A.P. RTE.	SECTION	COUNTY	TOTAL SHEETS	SHEET NO.
2298	16-00215-11-PV	KANE	611	302
		CONTRACT NO. 61E05		

FED. ROAD DIST. NO. 1 | ILLINOIS | FED. AID PROJECT

FILE NAME = G:\CHI3\0189\Road\Sheets - B2 Contract\20131894-SHT-PMK-04.dgn

SIGN NUMBER	MUTCD CODE	PANEL DESCRIPTION	SIGN SUPPORT	ACTION	EXISTING STATION	EXISTING OFFSET	EXISTING WIDTH (IN)	EXISTING HEIGHT (IN)	REMOVE SIGN PANEL ASSEMBLY		INSTALL EX. SIGN PANEL (SQ FT)	PROPOSED STATION	PROPOSED OFFSET	PROPOSED WIDTH (IN)	PROPOSED HEIGHT (IN)	SIGN PANEL (SQ FT)			SIGN SUPPORT (FT)		
																			METAL POST		WOOD POST
									TYPE A (EA)	TYPE B (EA)						TYPE 1	TYPE 2	TYPE 3	TYPE A	TYPE B	
LONGMEADOW PARKWAY CONNECTOR ROAD																					
S9-1	D1-2	EAST TO IL-25 & IL-62, WEST TO RANDALL ROAD (GUIDE SIGN G)	TWO WOOD SIGN SUPPORTS (GROUND)	PROPOSED SIGN								1501+09	57' LT	120	48			40.00			24 (2)
S9-2	M3-1	NORTH	POST MOUNTED (GROUND)	PROPOSED SIGN								1505+48	35' RT	24	12	2.00				13.0	
S9-3	M1-I100	ILLINOIS 31	POST MOUNTED (GROUND)	PROPOSED SIGN								1505+48	35' RT	24	24	4.00				*	
S9-4	M5-1(L)	ARROW LEFT	POST MOUNTED (GROUND)	PROPOSED SIGN								1505+48	35' RT	21	15	2.19				*	
S9-5	M3-1	SOUTH	POST MOUNTED (GROUND)	PROPOSED SIGN								1505+48	39' RT	24	12	2.00				13.0	
S9-6	M1-I100	ILLINOIS 31	POST MOUNTED (GROUND)	PROPOSED SIGN								1505+48	39' RT	24	24	4.00				*	
S9-7	M5-1(R)	ARROW RIGHT	POST MOUNTED (GROUND)	PROPOSED SIGN								1505+48	39' RT	21	15	2.19				*	
S9-8	D1-2	EAST TO IL-25 & IL-62, WEST TO RANDALL ROAD (GUIDE SIGN H)	TWO WOOD SIGN SUPPORTS (GROUND)	PROPOSED SIGN								1507+99	50' LT	120	48			40.00			24 (2)
ILLINOIS ROUTE 31																					
S10-1		CCFPD 18N 681 (ADDRESS)	POST MOUNTED (GROUND)	SIGN PANEL TO BE REMOVED & INSTALLED ON NEW POST	401+45	32.0' RT	18	18	1		1.00	401+45	35.0' RT						10.00		
S10-2	S4-I105	UNLAWFUL TO PASS STOPPED SCHOOL BUS ON EITHER SIDE	POST MOUNTED (GROUND)	TO BE REMOVED	401+77	20.8' LT	36	36	1												
S10-3	S4-I105	UNLAWFUL TO PASS STOPPED SCHOOL BUS ON EITHER SIDE	POST MOUNTED (GROUND)	PROPOSED SIGN								401+80	25' LT	36	36	9.00				11.5	
S10-4	D3-2	TO LONGMEADOW PKWY NEXT SIGNAL (GUIDE SIGN A)	TWO WOOD SIGN SUPPORTS (GROUND)	PROPOSED SIGN								403+01	29' RT	96	42			28.00			23 (2)
S10-5	W3-3	SIGNAL AHEAD	POST MOUNTED (GROUND)	PROPOSED SIGN								405+00	40' RT	36	36	9.00				12.5	
S10-5A	W16-15P	NEW (PLAQUE)	POST MOUNTED (GROUND)	PROPOSED SIGN								405+00	40' RT	24	12	2.00					
S11-0	W4-2	RIGHT LANE ENDS	POST MOUNTED (GROUND)	PROPOSED SIGN								412+75	50' LT	36	36	9.00				11.5	
S11-1		CCFPD 18N 749 (ADDRESS)	POST MOUNTED (GROUND)	SIGN PANEL TO BE REMOVED & INSTALLED ON NEW POST	408+74	41.0' RT	18	18	1		1.00	408+75	50' RT						10.0		
S11-2		FOREST PRESERVE BOUNDARY	POST MOUNTED (GROUND)	SIGN PANEL TO BE REMOVED & INSTALLED ON NEW POST	409+35	30.0' LT	12	12	1		1.00	409+35	50' LT						9.5		
S11-3		SIGN WILL NOT BE USED	SIGN WILL NOT BE USED	SIGN WILL NOT BE USED																	
S11-4	R2-1	SPEED LIMIT 50	POST MOUNTED (GROUND)	PROPOSED SIGN								411+00	50' LT	30	36	7.50				11.5	
S11-5		FOREST PRESERVE BOUNDARY	POST MOUNTED (GROUND)	SIGN PANEL TO BE REMOVED & INSTALLED ON NEW POST	412+60	35.0' RT	12	12	1		1.00	412+50	65' RT						9.5		
S11-6	R2-1	SPEED LIMIT 50	POST MOUNTED (GROUND)	TO BE REMOVED	413+50	28.9' LT	24	30	1												
S11-7	W1-4	REVERSE CURVE	POST MOUNTED (GROUND)	PROPOSED SIGN								413+50	50' LT	36	36	9.00				11.5	
S11-8		RUSTED STREET SIGN (FOREST LANE)	POST MOUNTED (GROUND)	TO BE REMOVED	413+76	35.7' LT	12	12	1												
S11-9		FOREST PRESERVE BOUNDARY	POST MOUNTED (GROUND)	TO BE REMOVED	413+78	49.1' LT	12	12	1												
S11-10	W11-10	TRUCK WARNING	POST MOUNTED (GROUND)	TO BE REMOVED	414+13	19.2' RT	30	30	1												
S11-11		SIGN WILL NOT BE USED	SIGN WILL NOT BE USED	SIGN WILL NOT BE USED																	
S11-12	W1-7	TWO-DIRECTION LARGE ARROW	POST MOUNTED (GROUND)	PROPOSED SIGN								415+10	46' RT	48	24	8.00					9
S11-13	M1-I100	ILLINOIS 31	POST MOUNTED (GROUND)	PROPOSED SIGN								415+31	47' RT	24	24	4.00				12.0	
S11-14	M6-4	DIRECTIONAL ARROW - LEFT AND RIGHT	POST MOUNTED (GROUND)	PROPOSED SIGN								415+31	47' RT	21	15	2.19				*	
S11-18	R2-1	SPEED LIMIT 50	POST MOUNTED (GROUND)	TO BE REMOVED	415+78	18.9' RT	24	30	1												
S11-19		SIGN WILL NOT BE USED	SIGN WILL NOT BE USED	SIGN WILL NOT BE USED																	
S11-20	R2-1	SPEED LIMIIT 50	POST MOUNTED (GROUND)	PROPOSED SIGN								417+00	62' RT	30	36	7.50				11.5	
S11-21	R3-5R	RIGHT TURN ONLY	POST MOUNTED (GROUND)	PROPOSED SIGN								418+40	60' LT	30	36	7.50				11.5	
S11-22	W11-10	TRUCK WARNING	POST MOUNTED (GROUND)	PROPOSED SIGN								418+50	60' RT	36	36	9.00				11.5	
S12-1	W4-2	RIGHT LANE ENDS	POST MOUNTED (GROUND)	PROPOSED SIGN								419+75	60' RT	36	36	9.00				11.5	
S12-2	W1-4	REVERSE CURVE	POST MOUNTED (GROUND)	TO BE REMOVED	419+58	24.5' LT	30	30	1												
S12-3		FOREST PRESERVE BOUNDARY	POST MOUNTED (GROUND)	TO BE REMOVED	419+65	30.0' RT	12	12	1												
S12-4		CCFPD 18N 951 (ADDRESS)	POST MOUNTED (GROUND)	TO BE REMOVED	420+05	20.0' RT	18	18	1												
				SUBTOTAL:					13	0	4					110	0	108	39	143	76

NOTES:

1. FOR GUIDE SIGN AND STREET NAME SIGN DETAILS, SEE SHEETS 305 TO 309 .

3. FOR MAST-ARM-MOUNTED STREET NAME SIGNS, SEE SHEETS 341TO 345.

* SHARES A POST WITH THE SIGN ABOVE IT

(2) REQUIRES TWO POSTS

SIGN NUMBER	MUTCD CODE	PANEL DESCRIPTION	SIGN SUPPORT	ACTION	EXISTING STATION	EXISTING OFFSET	EXISTING WIDTH (IN)	EXISTING HEIGHT (IN)	REMOVE SIGN PANEL ASSEMBLY		INSTALL EX. SIGN PANEL (SQ FT)	PROPOSED STATION	PROPOSED OFFSET	PROPOSED WIDTH (IN)	PROPOSED HEIGHT (IN)	SIGN PANEL (SQ FT)			SIGN SUPPORT (FT)		
																			METAL POST		WOOD POST
									TYPE A (EA)	TYPE B (EA)						TYPE 1	TYPE 2	TYPE 3	TYPE A	TYPE B	
S12-5	W14-3	NO PASSING ZONE	POST MOUNTED (GROUND)	TO BE REMOVED	421+20	20.0' RT	48	36		1											
S12-6		SIGN WILL NOT BE USED	SIGN WILL NOT BE USED	SIGN WILL NOT BE USED																	
S12-7		RUSTED SIGN	POST MOUNTED (GROUND)	TO BE REMOVED	421+39	33' LT	36	36	1												
S12-8	W3-3	SIGNAL AHEAD	POST MOUNTED (GROUND)	PROPOSED SIGN								422+50	46' LT	36	36	9.00				12.5	
S12-8A	W16-15P	NEW (PLAQUE)	POST MOUNTED (GROUND)	PROPOSED SIGN								422+50	46' LT	24	12	2.00					
S12-9		ALMPD 19N 030 (ADDRESS)	POST MOUNTED (GROUND)	TO BE REMOVED	424+05	30.0' LT	18	18	1												
S12-10	D3-1	LATHROP LN. (2 SIGN PANELS BACK TO BACK)	POST MOUNTED (GROUND)	TO BE REMOVED	426+22	33.5' LT	42	8	1												
S12-11	D3-1	LATHROP LN. (2 SIGN PANELS BACK TO BACK)	POST MOUNTED (GROUND)	PROPOSED SIGN								426+15	45' LT	42	8	2.33			10.0		
S12-12	D3-1	RT 31 (2 SIGN PANELS BACK TO BACK)	POST MOUNTED (GROUND)	TO BE REMOVED	426+22	33.5' LT	24	8	1												
S12-13	D3-1	IL RTE 31 (2 SIGN PANELS BACK TO BACK)	POST MOUNTED (GROUND)	PROPOSED SIGN								426+15	45' LT	30	8	1.67			*		
S12-14	R1-1	STOP SIGN (On EB LATHROP LN)	POST MOUNTED (GROUND)	TO BE REMOVED	426+32	41.5' LT	30	30	1												
S12-15	R1-1	STOP SIGN (On EB LATHROP LN)	POST MOUNTED (GROUND)	PROPOSED SIGN								426+28	67' LT	30	30	6.25				11.0	
S12-16	W14-2	NO OUTLET (On WB LATHROP LN)	POST MOUNTED (GROUND)	TO BE REMOVED	426+72	85.1' LT	30	30	1												
S12-17	W14-2	NO OUTLET (On WB LATHROP LN)	POST MOUNTED (GROUND)	PROPOSED SIGN								426+81	87' LT	30	30	6.25				12.5	
S12-18		DUNDEE TOWNSHIP MAINTENANCE (On WB LATHROP LN)	POST MOUNTED (GROUND)	SIGN PANEL TO BE REMOVED & INSTALLED ON NEW POST	426+72	85.1' LT	30	18	1		1.00	426+81	87' LT							*	
S12-19	D3-2	TO LONGMEADOW PKWY NEXT SIGNAL (GUIDE SIGN F)	TWO WOOD SIGN SUPPORTS (GROUND)	PROPOSED SIGN								428+00	49' LT	96	42			28.00			23 (2)
S13-1	W2-2	T INTERESECTION (LEFT)	POST MOUNTED (GROUND)	TO BE REMOVED	432+27	32.3' RT	30	30	1												
S13-2	W16-8P	CRESCENT DR.	POST MOUNTED (GROUND)	TO BE REMOVED	432+27	32.3' RT	30	8	1												
S13-3	W2-2	T INTERESECTION (LEFT)	POST MOUNTED (GROUND)	PROPOSED SIGN	432+27	32.3' RT						433+00	35' RT	36	36	9.00				12.5	
S13-4	W16-8P	CRESCENT DR.	POST MOUNTED (GROUND)	PROPOSED SIGN	432+27	32.3' RT						433+00	35' RT	30	8	1.67				*	
S13-5		FOREST PRESERVE BOUNDARY	POST MOUNTED (GROUND)	SIGN PANEL TO BE REMOVED & INSTALLED ON NEW POST	433+25	30.0' RT	12	12	1		1.00	433+50	35' RT						9.5		
S13-6	R2-1	SPEED LIMIT 50	POST MOUNTED (GROUND)	TO BE REMOVED	436+68	18.5' LT	24	30	1												
S13-7	R2-1	SPEED LIMIT 50	POST MOUNTED (GROUND)	PROPOSED SIGN								437+40	25' LT	30	36	7.50				11.5	
S13-8	W14-3	NO PASSING ZONE	POST MOUNTED (GROUND)	TO BE REMOVED	436+68	18.5' LT	48	36		1											
S13-10	D3-1	CRESCENT DR. (2 SIGN PANELS BACK TO BACK)	POST MOUNTED (GROUND)	TO BE REMOVED	438+73	34.2' LT	42	8	1												
S13-11	D3-1	CRESCENT DR. (2 SIGN PANELS BACK TO BACK)	POST MOUNTED (GROUND)	PROPOSED SIGN								438+75	30' LT	42	8	2.33			10.0		
S13-12	D3-1	RT 31 (2 SIGN PANELS BACK TO BACK)	POST MOUNTED (GROUND)	TO BE REMOVED	438+73	34.2' LT	24	8	1												
S13-13	D3-1	IL RTE 31 (2 SIGN PANELS BACK TO BACK)	POST MOUNTED (GROUND)	PROPOSED SIGN								438+75	30' LT	30	8	1.67			*		
S13-14	R1-1	STOP SIGN (On EB CRESCENT DR)	POST MOUNTED (GROUND)	TO BE REMOVED	438+86	33.1' LT	30	30	1												
S13-15	R1-1	STOP SIGN (On EB CRESCENT DR)	POST MOUNTED (GROUND)	PROPOSED SIGN								438+86	33' LT	30	30	6.25				11.0	
				SUBTOTAL:					14	2	2					56	0	28	30	71	19
				TOTAL:					27	2	6					166	0	136	69	214	95

NOTES:

1. FOR GUIDE SIGN AND STREET NAME SIGN DETAILS, SEE SHEETS 305 TO 309 .

3. FOR MAST-ARM-MOUNTED STREET NAME SIGNS, SEE SHEETS 341TO 345.

* SHARES A POST WITH THE SIGN ABOVE IT

(2) REQUIRES TWO POSTS

SIGN DETAIL (A)

N.T.S.

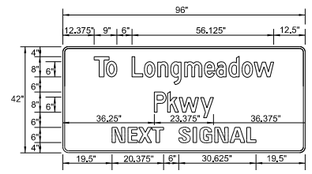

SIGN NUMBER	S10-4	
WIDTH x HGHT.	96" x 42"	
BORDER WIDTH	0.75"	
CORNER RADIUS	1.875"	
MOUNTING	Ground	
BACKGROUND	TYPE:	Reflective
	COLOR:	Green
LEGEND/BORDER	TYPE:	Reflective
	COLOR:	White/White

SYMBOL	ROT	X	Y	WID	HT

Dimensions are in inches.tenths

Letter locations are panel edge to lower left corner

LETTER POSITIONS (X)

																																				LENGTH	SERIES/SIZE
T	o		L	o	n	g	m	e	a	d	o	w																									C 2000
12.4	16.7	21.3	27.3	31.6	36.6	42.1	47.3	55.4	60.3	65.1	70.4	75.4	83.4																							96.0	8/6
P	k	w	y																																		C 2000
36.3	41.5	46.7	54.5	59.7																																96.0	8/6
N	E	X	T		S	I	G	N	A	L																											C 2000
19.5	24.9	30.3	35.5	39.8	45.8	50.8	53.6	59.6	65.8	71.4	76.4																									96.0	6

FILE NAME = G:\CH13\0109\Road\Sheets - B2 Contract\20131894-SHT_SIGNS-GUIDE.dgn

Tran Systems	USER NAME = CEComin	DESIGNED - BSH	REVISED -
		DRAWN - MLB	REVISED -
	PLOT SCALE = 5.0000 ' / in.	CHECKED - MFD	REVISED -
	PLOT DATE = 10/5/2017	DATE - 8/7/2017	REVISED -

STATE OF ILLINOIS
DEPARTMENT OF TRANSPORTATION

PROPOSED GUIDE SIGNS
IL ROUTE 31

SCALE: N.T.S. | SHEET 305 OF 611 SHEETS

F.A.U. RTE.	SECTION	COUNTY	TOTAL SHEETS	SHEET NO.
2298	16-00215-11-PV	KANE	611	305
		CONTRACT NO. 61E05		

FED. ROAD DIST. NO. 1 | ILLINOIS | FED. AID PROJECT

SHEET NOT USED

FILE NAME = G:\CH13\0109\Road\Sheets - B2 Contract\2013B94-SHT_SIGNS-GUIDE.dgn

TranSystems	USER NAME = mbmcwhorter	DESIGNED - BSH	REVISED -
		DRAWN - MLB	REVISED -
	PLOT SCALE = 5.0000 ' / in.	CHECKED - MFD	REVISED -
	PLOT DATE = 9/25/2017	DATE - 8/7/2017	REVISED -

STATE OF ILLINOIS
DEPARTMENT OF TRANSPORTATION

PROPOSED GUIDE SIGNS
IL ROUTE 31

SCALE: N.T.S. | SHEET 306 OF 611 SHEETS

F.A.U. RTE.	SECTION	COUNTY	TOTAL SHEETS	SHEET NO.
2298	16-00215-11-PV	KANE	611	306
		CONTRACT NO. 61E05		

FED. ROAD DIST. NO. 1 | ILLINOIS | FED. AID PROJECT

SIGN DETAIL (F)

SIGN NUMBER	S12-19
WIDTH x HGHT.	96" x 42"
BORDER WIDTH	0.75"
CORNER RADIUS	1.875"
MOUNTING	Ground
BACKGROUND	TYPE: Reflective
	COLOR: Green
LEGEND/BORDER	TYPE: Reflective
	COLOR: White/White

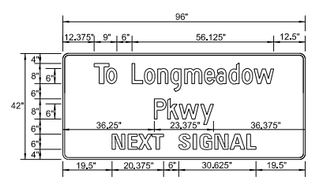

SYMBOL	ROT	X	Y	WID	HT

Dimensions are in inches.tenths

Letter locations are panel edge to lower left corner

LETTER POSITIONS (X)																																				LENGTH	SERIES/SIZE
T	o		L	o	n	g	m	e	a	d	o	w																									C 2000
12.4	16.7	21.3	27.3	31.6	36.6	42.1	47.3	55.4	60.3	65.1	70.4	75.4	83.4																							96.0	86
P	k	w	y																																		C 2000
36.3	41.5	46.7	54.5	59.7																																96.0	86
N	E	X	T		S	I	G	N	A	L																											C 2000
19.5	24.9	30.3	35.5	39.8	45.8	50.8	53.6	59.6	65.8	71.4	76.4																									96.0	6

FILE NAME = G:\CH13\0109\Road\Sheets - B2 Contract\20131894-SHT_SIGNS-GUIDE.dgn

Tran Systems

USER NAME = CEComin	DESIGNED - BSH	REVISED -
	DRAWN - MLB	REVISED -
PLOT SCALE = 5.0000 ' / in.	CHECKED - MFD	REVISED -
PLOT DATE = 10/5/2017	DATE - 8/7/2017	REVISED -

STATE OF ILLINOIS
DEPARTMENT OF TRANSPORTATION

PROPOSED GUIDE SIGNS
IL ROUTE 31

SCALE: N.T.S. | SHEET 307 OF 611 SHEETS

F.A.U. RTE.	SECTION	COUNTY	TOTAL SHEETS	SHEET NO.
2298	16-00215-11-PV	KANE	611	307
		CONTRACT NO. 61E05		

FED. ROAD DIST. NO. 1 | ILLINOIS | FED. AID PROJECT

SIGN DETAIL (G)

1:50

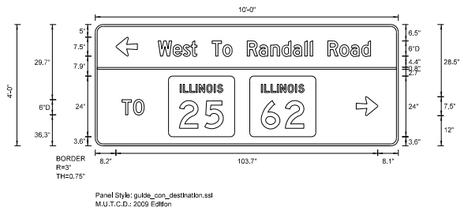

SIGN NUMBER	D1-2 (2 Dest – Arrows RL)		
WIDTH x HGHT.	10'-0" x 6'-0"		
BORDER WIDTH	0.75"		
CORNER RADIUS	3"		
MOUNTING	Overhead		
BACKGROUND	TYPE:	Reflective	
	COLOR:	Green	
LEGEND/BORDER	TYPE:	Reflective	
	COLOR:	Black /White/White	

SYMBOL	ROT	X	Y	WID	HT
AR_Type B	90	8.2	59.5	7.5	8.5
M1-H100A-2-22-10D		28.9	27.7	26.2	24
M1-H100A-2-22-10D		61.1	27.7	26.2	24
AR_Type B	270	103.3	27.6	7.5	8.5

Panel Style: guide_con_destination.ssi
Dimensions are in inches.tenths

Letter locations are panel edge to lower left corner

LETTER POSITIONS (X)

																																				LENGTH	SERIES/SIZE
W	e	s	t		T	o		R	a	n	d	a	l	l		R	o	a	d																		D 2000
24.9	30.8	34.8	37.9	40.3	46.3	50.5	54.2	60.2	64.9	69.4	73.9	78.4	82.9	85.1	86	92	96.8	101.1	105.4																84.1	6/4.5
T	O																																				D 2000
10.6	15.1																																		8.8	6	

SIGN DETAIL (H)

1:50

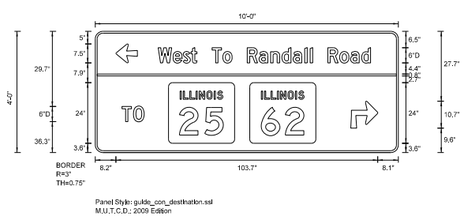

SIGN NUMBER	D1-2 (2 Dest – Arrows RL)		
WIDTH x HGHT.	10'-0" x 6'-0"		
BORDER WIDTH	0.75"		
CORNER RADIUS	3"		
MOUNTING	Overhead		
BACKGROUND	TYPE:	Reflective	
	COLOR:	Green	
LEGEND/BORDER	TYPE:	Reflective	
	COLOR:	Black /White/White	

SYMBOL	ROT	X	Y	WID	HT
AR_Type C 90L	0	8.2	57.2	10.7	10.7
M1-H100A-2-22-10D		28.9	27.6	26.2	24
M1-H100A-2-22-10D		61.1	27.6	26.2	24
AR_Type C 90R	0	101.1	25.2	10.7	10.7

Panel Style: guide_con_destination.ssi
Dimensions are in inches.tenths

Letter locations are panel edge to lower left corner

LETTER POSITIONS (X)

																																				LENGTH	SERIES/SIZE
W	e	s	t		T	o		R	a	n	d	a	l	l		R	o	a	d																		D 2000
24.9	30.8	34.8	37.9	40.3	46.3	50.5	54.2	60.2	64.9	69.4	73.9	78.4	82.9	85.1	86	92	96.8	101.1	105.4																84.1	6/4.5
T	O																																				D 2000
10.6	15.1																																		8.8	6	

FILE NAME = G:\CHI3\0109\Road\Sheets - B2 Contract\20131894-SHT-SIGNS-GUIDE.dgn

TranSystems

USER NAME = mbmcwhorter	DESIGNED - BSH	REVISED -	
	DRAWN - MLB	REVISED -	
PLOT SCALE = 5.0000 ' / in.	CHECKED - MFD	REVISED -	
PLOT DATE = 9/25/2017	DATE - 8/7/2017	REVISED -	

STATE OF ILLINOIS
DEPARTMENT OF TRANSPORTATION

PROPOSED GUIDE SIGNS
IL ROUTE 31

SCALE: N.T.S. | SHEET 308 OF 611 SHEETS

F.A.U. RTE.	SECTION	COUNTY	TOTAL SHEETS	SHEET NO.
2298	16-00215-11-PV	KANE	611	308
		CONTRACT NO. 61E05		

FED. ROAD DIST. NO. 1 | ILLINOIS | FED. AID PROJECT

SIGN DETAIL
1:20

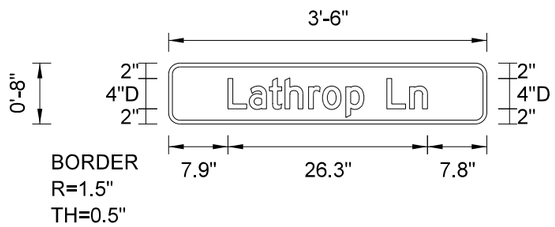

Panel Style: Street Name 6-3in.ssi
M.U.T.C.D.: 2009 Edition

Panel Style: Street Name 6-3in.ssi
Dimensions are in inches.tenths
Letter locations are panel edge to lower left corner

SIGN NUMBER	S12-10
WIDTH x HGHT.	3'-6" x 0'-8"
BORDER WIDTH	0.5"
CORNER RADIUS	1.5"
MOUNTING	Ground
BACKGROUND	TYPE: Reflective
	COLOR: Green
LEGEND/BORDER	TYPE: Reflective
	COLOR: White/White

SYMBOL	ROT	X	Y	WID	HT

LETTER POSITIONS (X)																LENGTH	SERIES/SIZE
L	a	t	h	r	o	p	L	n									D 2000
7.9	10.7	13.3	15.4	18.5	20.3	23.4	28.8	31.8								26.3	4/3

SIGN DETAIL
1:20

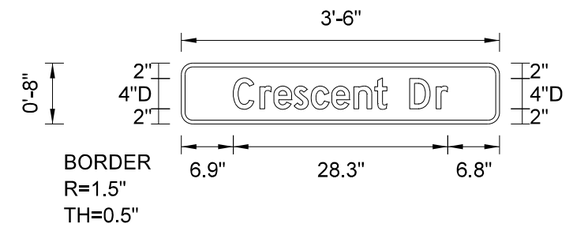

Panel Style: Street Name 6-3in.ssi
M.U.T.C.D.: 2009 Edition

Panel Style: Street Name 6-3in.ssi
Dimensions are in inches.tenths
Letter locations are panel edge to lower left corner

SIGN NUMBER	S13-11
WIDTH x HGHT.	3'-6" x 0'-8"
BORDER WIDTH	0.5"
CORNER RADIUS	1.5"
MOUNTING	Ground
BACKGROUND	TYPE: Reflective
	COLOR: Green
LEGEND/BORDER	TYPE: Reflective
	COLOR: White/White

SYMBOL	ROT	X	Y	WID	HT

LETTER POSITIONS (X)																LENGTH	SERIES/SIZE
C	r	e	s	c	e	n	t	D	r								D 2000
6.9	10.4	12.2	14.9	17.1	19.9	22.8	25.5	30.1	33.7							28.3	4/3

SIGN DETAIL
N.T.S.

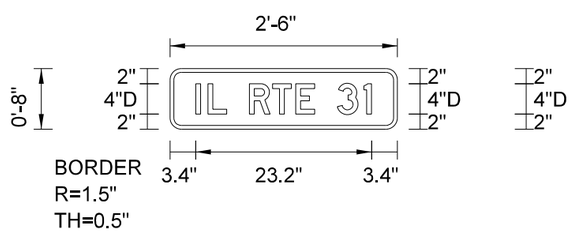

Panel Style: Street Name 6-3in.ssi
M.U.T.C.D.: 2009 Edition

Panel Style: Street Name 6-3in.ssi
Dimensions are in inches.tenths
Letter locations are panel edge to lower left corner

SIGN NUMBER	S12-12
WIDTH x HGHT.	2'-6" x 0'-8"
BORDER WIDTH	0.5"
CORNER RADIUS	1.5"
MOUNTING	Ground
BACKGROUND	TYPE: Reflective
	COLOR: Green
LEGEND/BORDER	TYPE: Reflective
	COLOR: White/White

SYMBOL	ROT	X	Y	WID	HT

LETTER POSITIONS (X)																LENGTH	SERIES/SIZE
I	L	R	T	E	3	1											D 2000
3.4	5	10.5	13.5	16.6	22.1	25.6										23.2	4

FILE NAME = G:\CHI3\0109\Road\Sheets - B2 Contract\20131894-SHT-SIGNS-GUIDE.dgn

TranSystems

USER NAME = mbmcwhorter	DESIGNED - BSH	REVISED -
	DRAWN - MLB	REVISED -
PLOT SCALE = 5.0000 ' / in.	CHECKED - MFD	REVISED -
PLOT DATE = 9/25/2017	DATE - 8/7/2017	REVISED -

STATE OF ILLINOIS
DEPARTMENT OF TRANSPORTATION

PROPOSED STREET NAME SIGNS
IL ROUTE 31

SCALE: N.T.S. | SHEET 309 OF 611 SHEETS

F.A.U. RTE.	SECTION	COUNTY	TOTAL SHEETS	SHEET NO.
2298	16-00215-11-PV	KANE	611	309

CONTRACT NO. 61E05

FED. ROAD DIST. NO. 1 | ILLINOIS | FED. AID PROJECT

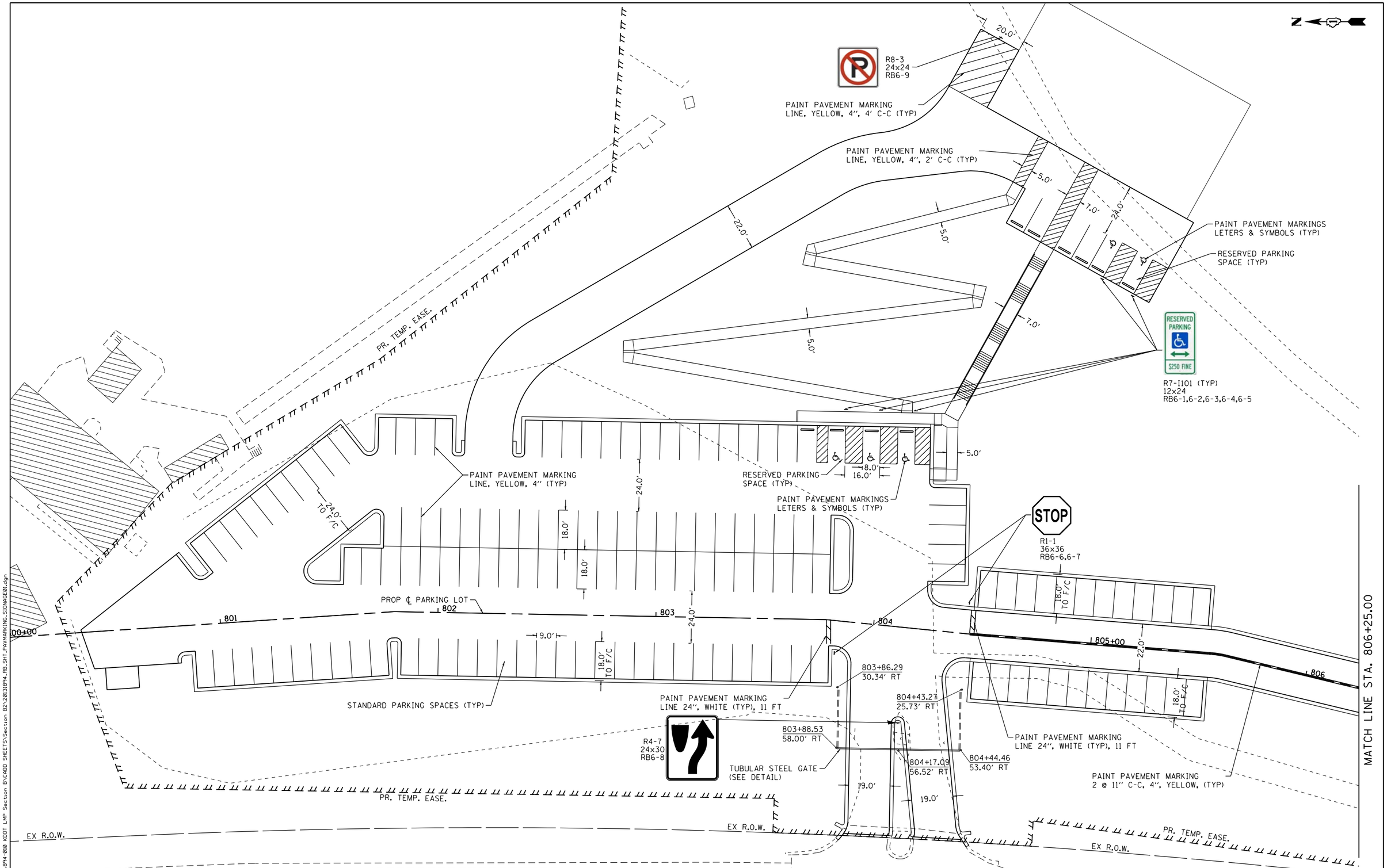

FILE NAME = W:\894-010 KDOT LMP Section B\CADD SHEETS\Section B2\2013894_RB_SHT_PAVMARKING_SIGNAGE01.dgn

Bollinger, Lach & Associates, Inc.
ITASCA, ILLINOIS

USER NAME = jthede	DESIGNED - GJE	REVISED -
	DRAWN - GJE	REVISED -
PLOT SCALE = 40.0000 ' / in.	CHECKED - DBB	REVISED -
PLOT DATE = 8/7/2017	DATE - 08/07/2017	REVISED -

STATE OF ILLINOIS
DEPARTMENT OF TRANSPORTATION

RAGING BUFFALO
PAVEMENT MARKING AND SIGNING PLAN

SCALE: 1"=20' | SHEET 310 OF 611 SHEETS | STA. 800+00.00 TO STA. 806+25.00

F.A.U. RTE.	SECTION	COUNTY	TOTAL SHEETS	SHEET NO.
2298	16-00215-11-PV	KANE	611	310

CONTRACT NO. 61E05

ILLINOIS FED. AID PROJECT

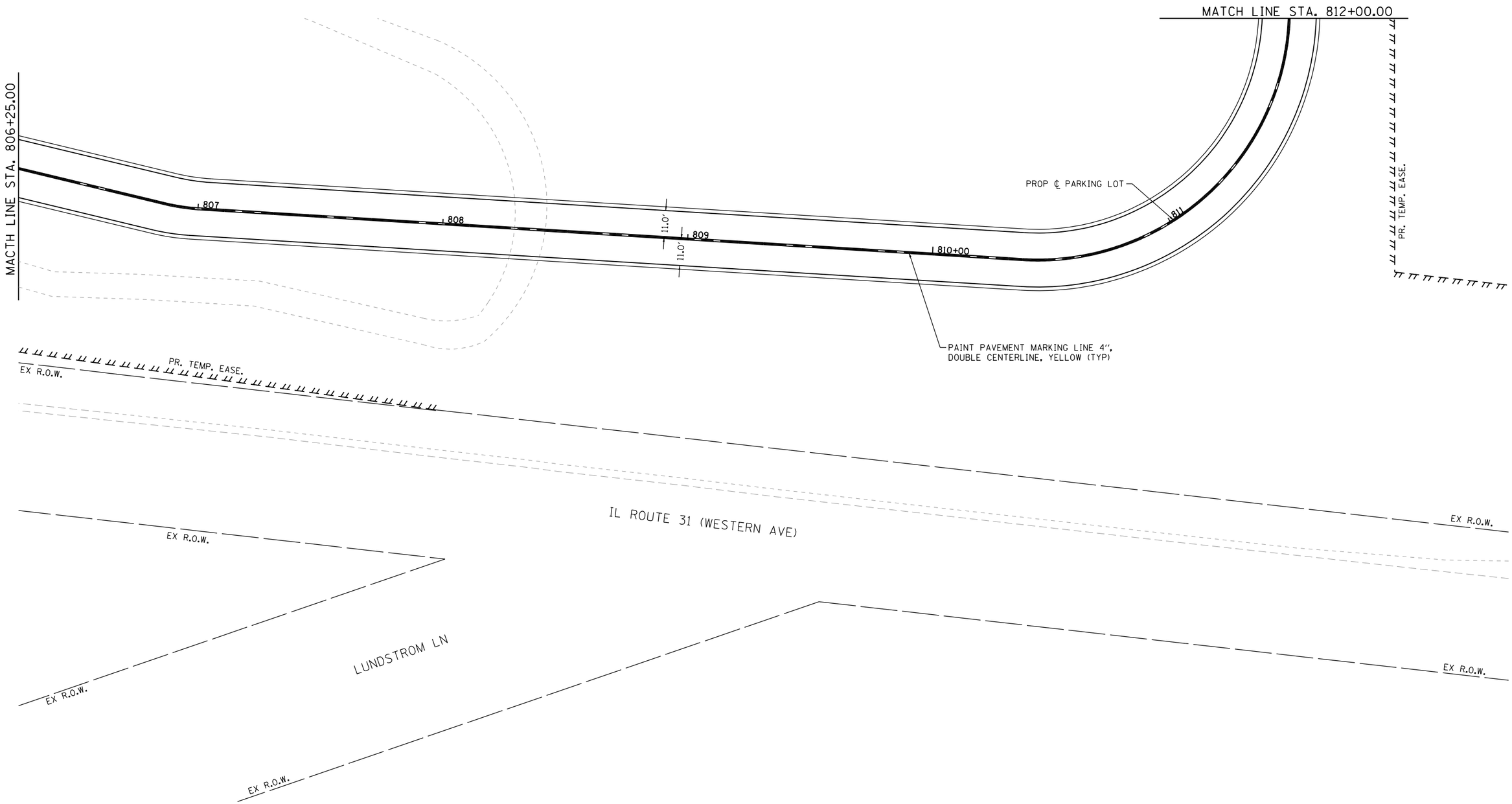

FILE NAME = w:\894-010 KDOT LMP Section BVCADD SHEETS\Section B2\20131894_PB_SHT_PAVMARKING_SIGNAGE02.dgn

Bollinger, Lach & Associates, Inc.
ITASCA, ILLINOIS

USER NAME = gellwanger	DESIGNED - GJE	REVISED -	
	DRAWN - GJE	REVISED -	
PLOT SCALE = 40.0000 ' / in.	CHECKED - DBB	REVISED -	
PLOT DATE = 8/4/2017	DATE - 08/07/2017	REVISED -	

STATE OF ILLINOIS
DEPARTMENT OF TRANSPORTATION

RAGING BUFFALO
PAVEMENT MARKING AND SIGNING PLAN

SCALE: 1"=20' | SHEET 311 OF 611 SHEETS | STA. 806+25.00 TO STA. 812+00.00

F.A.U. RTE.	SECTION	COUNTY	TOTAL SHEETS	SHEET NO.
2298	16-00215-11-PV	KANE	611	311

CONTRACT NO. 61E05

ILLINOIS FED. AID PROJECT

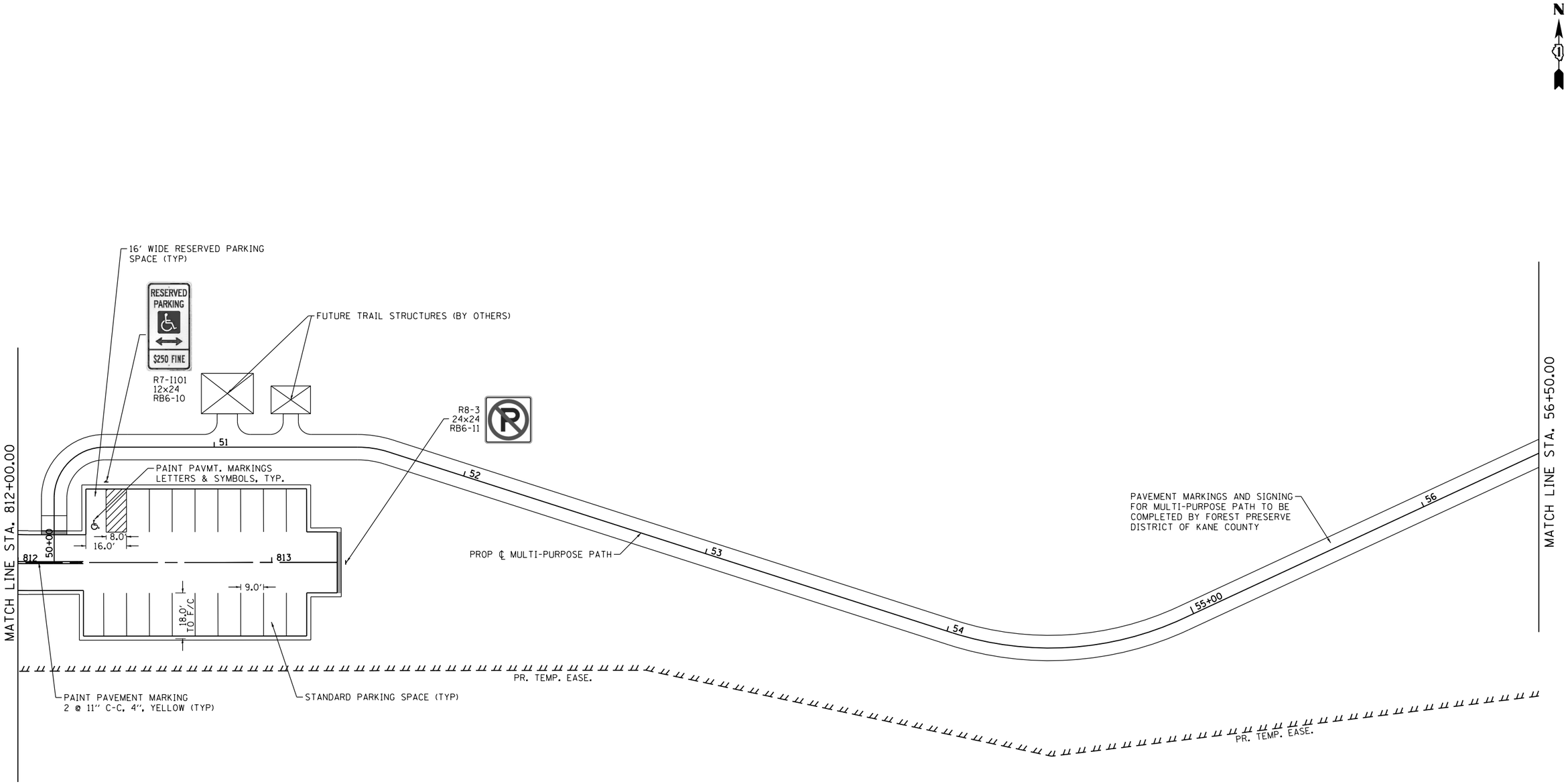

FILE NAME = w:\894-010 KDOT LMP Section B\CADD SHEETS\Section B2\2013894_PB_SHT_PAVMARKING_SIGNAGE03.dgn

Bollinger, Lach & Associates, Inc.
ITASCA, ILLINOIS

USER NAME = gellwanger	DESIGNED - GJE	REVISED -	
	DRAWN - GJE	REVISED -	
PLOT SCALE = 40.0000 ' / in.	CHECKED - DBB	REVISED -	
PLOT DATE = 8/4/2017	DATE - 08/07/2017	REVISED -	

STATE OF ILLINOIS
DEPARTMENT OF TRANSPORTATION

RAGING BUFFALO
PAVEMENT MARKING AND SIGNING PLAN

SCALE: 1"=20' | SHEET 312 OF 611 SHEETS | STA. 812+00.00 (50+00.00) TO STA. 813+25.78 (56+50.00)

F.A.U. RTE.	SECTION	COUNTY	TOTAL SHEETS	SHEET NO.
2298	16-00215-11-PV	KANE	611	312

CONTRACT NO. 61E05

ILLINOIS FED. AID PROJECT

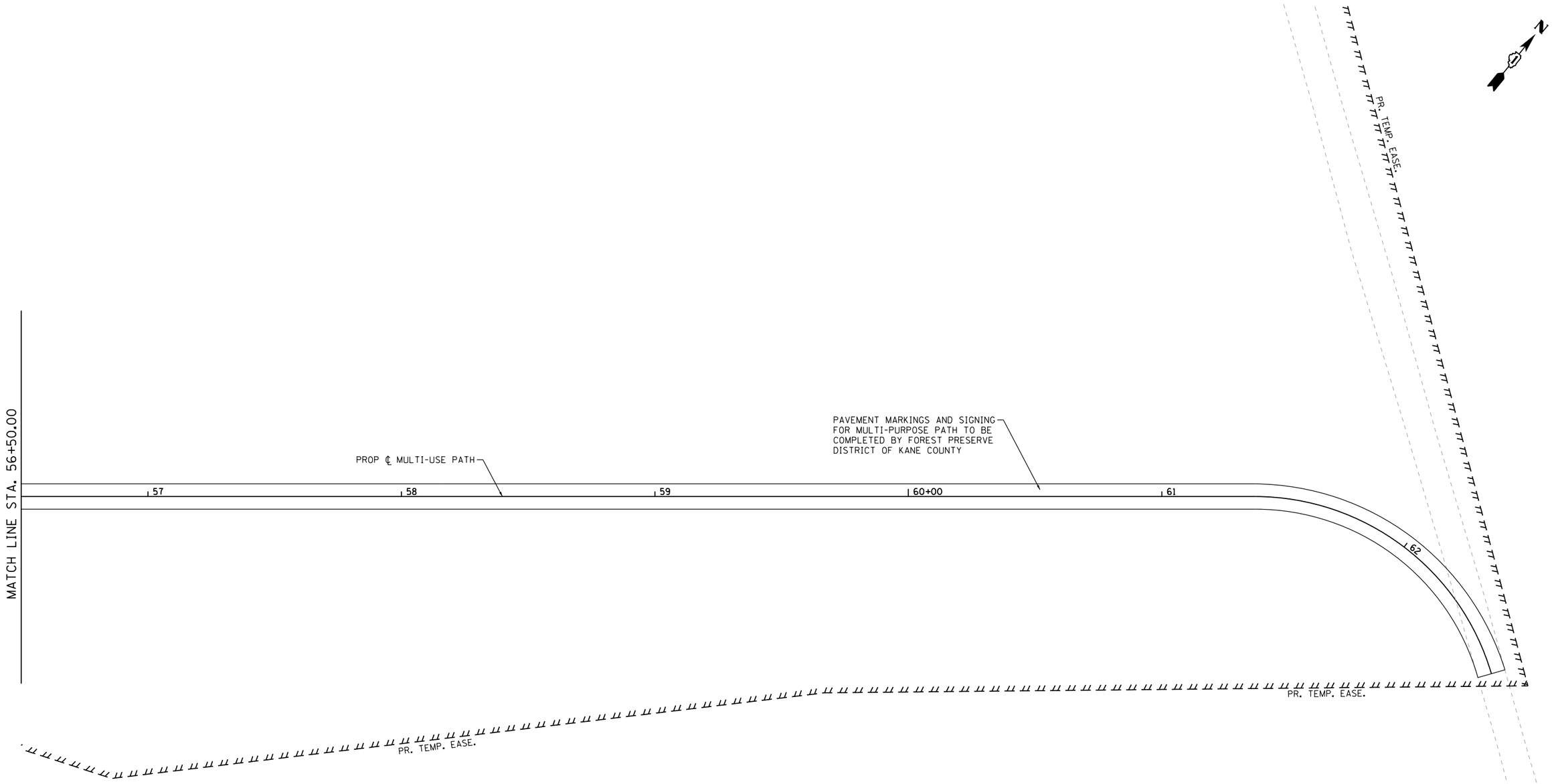

FILE NAME = w:\894-010 KDOT LMP Section B\CADD SHEETS\Section B2\20131894_RB_SHT_PAVMARKING_SIGNAGE04.dgn

Bollinger, Lach & Associates, Inc.
ITASCA, ILLINOIS

USER NAME = gellwanger	DESIGNED - GJE	REVISED -	
	DRAWN - GJE	REVISED -	
PLOT SCALE = 40.0000 ' / in.	CHECKED - DBB	REVISED -	
PLOT DATE = 8/4/2017	DATE - 08/07/2017	REVISED -	

STATE OF ILLINOIS
DEPARTMENT OF TRANSPORTATION

RAGING BUFFALO
PAVEMENT MARKING AND SIGNING PLAN

SCALE: 1"=20' | SHEET 313 OF 611 SHEETS | STA. 56+50.00 TO STA. 62+61.72

F.A.U. RTE.	SECTION	COUNTY	TOTAL SHEETS	SHEET NO.
2298	16-00215-11-PV	KANE	611	313

CONTRACT NO. 61E05

ILLINOIS FED. AID PROJECT

SIGN NUMBER	MUTCD CODE	PANEL DESCRIPTION	SIGN SUPPORT	ACTION	PROPOSED STATION	PROPOSED OFFSET	PROPOSED WIDTH (IN)	PROPOSED HEIGHT (IN)	SIGN PANEL (SQ FT)	TELESCOPING SIGN SUPPORT (FT)
									TYPE 1	
RB6-1	R7-1101	RESERVED PARKING (HANDICAP) $250 FINE	POST MOUNTED (GROUND)	PROPOSED SIGN	803+77.99	97.09 LT	12	24	2.00	14
RB6-2	R7-1101	RESERVED PARKING (HANDICAP) $250 FINE	POST MOUNTED (GROUND)	PROPOSED SIGN	803+93.42	98.40 LT	12	24	2.00	14
RB6-3	R7-1101	RESERVED PARKING (HANDICAP) $250 FINE	POST MOUNTED (GROUND)	PROPOSED SIGN	804+09.37	99.70 LT	12	24	2.00	14
RB6-4	R7-1101	RESERVED PARKING (HANDICAP) $250 FINE	POST MOUNTED (GROUND)	PROPOSED SIGN	804+91.67	167.13 LT	12	24	2.00	14
RB6-5	R7-1101	RESERVED PARKING (HANDICAP) $250 FINE	POST MOUNTED (GROUND)	PROPOSED SIGN	805+06.22	160.49 LT	12	24	2.00	14
RB6-6	R1-1	STOP	POST MOUNTED (GROUND)	PROPOSED SIGN	803+83.54	14.84 RT	36	36	9.00	15
RB6-7	R1-1	STOP	POST MOUNTED (GROUND)	PROPOSED SIGN	804+42.56	14.36 LT	36	36	9.00	15
RB6-8	R4-7	KEEP RIGHT	POST MOUNTED (GROUND)	PROPOSED SIGN	804+15.59	44.04 RT	24	30	5.00	14.5
RB6-9	R8-3	NO PARKING SYMBOL	POST MOUNTED (GROUND)	PROPOSED SIGN	804+31.23	274.04 LT	24	24	4.00	14
RB6-10	R7-1101	RESERVED PARKING (HANDICAP) $250 FINE	POST MOUNTED (GROUND)	PROPOSED SIGN	812+34.79	32.00 LT	12	24	2.00	14
RB6-11	R8-3	NO PARKING SYMBOL	POST MOUNTED (GROUND)	PROPOSED SIGN	813+29.41	0.00 RT	24	24	4.00	14
				TOTAL:					43.00	157

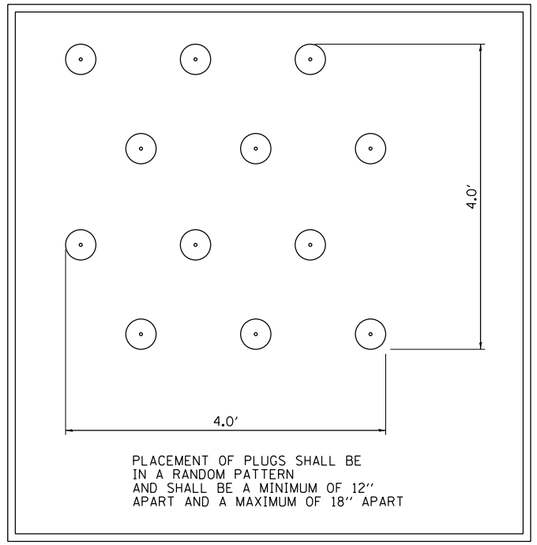

PLUG PLANTING DETAIL

Summary of Perennial Plants, Wetland Type Quanitities

Preferred Water Depth	Scientific Name	Common Name	% of Plug Type Per Basin	QUANTITY (EA)	QUANTITY (UNITS)
3"-6" below NWL	Acorus calamus	Sweet Flag	6.34%	2300	23
3"-6" below NWL	Alisma subcordatum	Common Water Plantain	6.34%	2300	23
6" above NWL	Calamargrosis canadensis	Blue Joint Grass	9.37%	3400	34
0"-3" below NWL	Carex cristatella	Crested Oval Sedge	1.65%	600	6
6" above NWL	Elocharis obtusa	Blunt Spike Rush	4.68%	1700	17
0"-3" below NWL	Iris virginica shrevei	Blue Flag	6.34%	2300	23
3"-6" below NWL	Juncus effusus	Common Rush	9.37%	3400	34
> 6" below NWL	Carex comosa	Bristly Sedge	15.15%	5500	55
3"-6" below NWL	Eupatorium perfolatum	Common Boneset	1.65%	600	6
>6" below NWL	Potamogeton illinoensis	Illinois Pondweed	1.65%	600	6
> 6" below NWL	Sagittaria latifolia	Common Arrowhead	1.65%	600	6
> 6" below NWL	Schoenoplectus acutus	Hard-Stemmed Bulrush	4.68%	1700	17
> 6" below NWL	Scirpus fluviatilis	River Bulrush	0.83%	300	3
> 6" below NWL	Scirpus americanus	Chairmaker's Rush	5.51%	2000	20
> 6" below NWL	Cephalantus occidentalis	Common Buttonbush	7.71%	2800	28
3"-6" below NWL	Scirpus cyperinus	Wool Grass	7.71%	2800	28
> 6" below NWL	Sparangium eurycaprum	Common Bur Reed	9.37%	3400	34
		TOTAL	**100.00%**	**36300**	**363**

PLUG PLANTING SCHEDULE

LEGEND

- SEEDING, CLASS 2A
- SEEDING, CLASS 3 (SPECIAL)
- SEEDING, CLASS 4 (SPECIAL)
- SEEDING, CLASS 4B (SPECIAL)
- PERENNIAL PLANTS, WETLAND TYPE, 2'' DIAMETER BY 4'' DEEP PLUG
- STONE RIPRAP (SEE PLANS FOR SIZE)

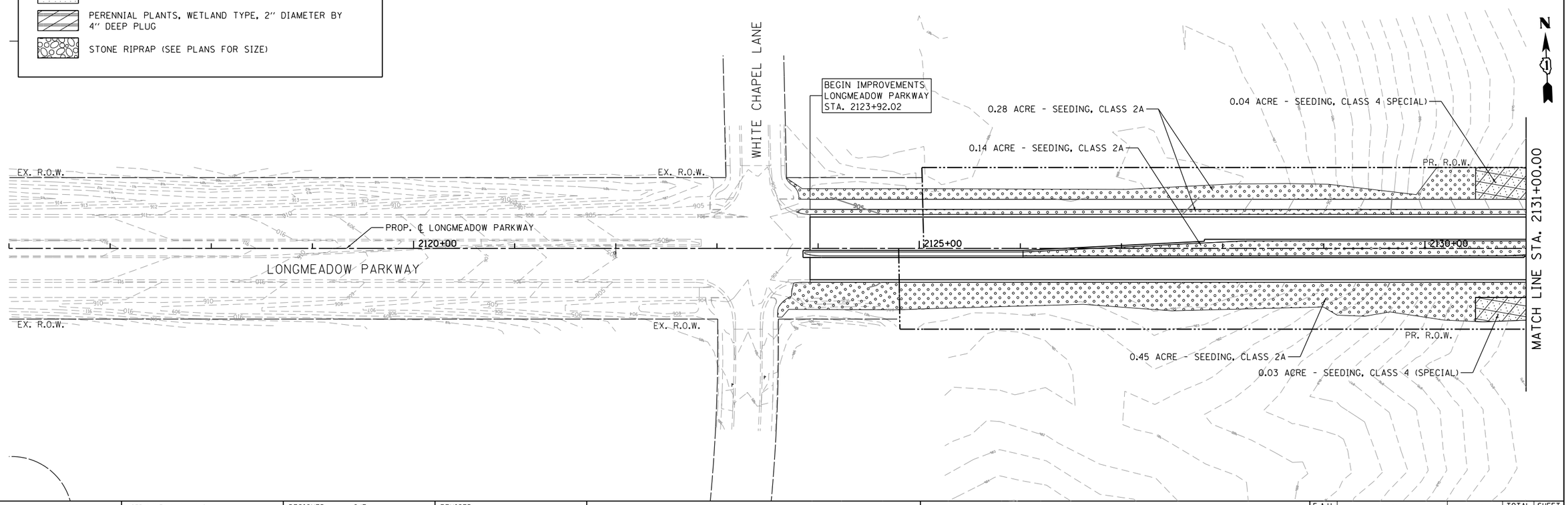

FILE NAME = W:\894-810 KDOT LMP Section B\CADD SHEETS\Section B2\20131894_SHT_LANDSCAPING_02.dgn

Bollinger, Lach & Associates, Inc.
ITASCA, ILLINOIS

USER NAME = dbruckelmeyer	DESIGNED - GJE	REVISED -	
	DRAWN - GJE	REVISED -	
PLOT SCALE = 100.0000 ' / in.	CHECKED - DBB	REVISED -	
PLOT DATE = 9/29/2017	DATE - 08/07/2017	REVISED -	

STATE OF ILLINOIS
DEPARTMENT OF TRANSPORTATION

LANDSCAPING PLAN
LONGMEADOW PARKWAY

SCALE: 1''=50' | SHEET 315 OF 611 SHEETS | STA. 2101+00.00 TO STA. 2131+00.00

F.A.U. RTE.	SECTION	COUNTY	TOTAL SHEETS	SHEET NO.
2298	16-00215-11-PV	KANE	611	315

CONTRACT NO. 61E05

ILLINOIS FED. AID PROJECT

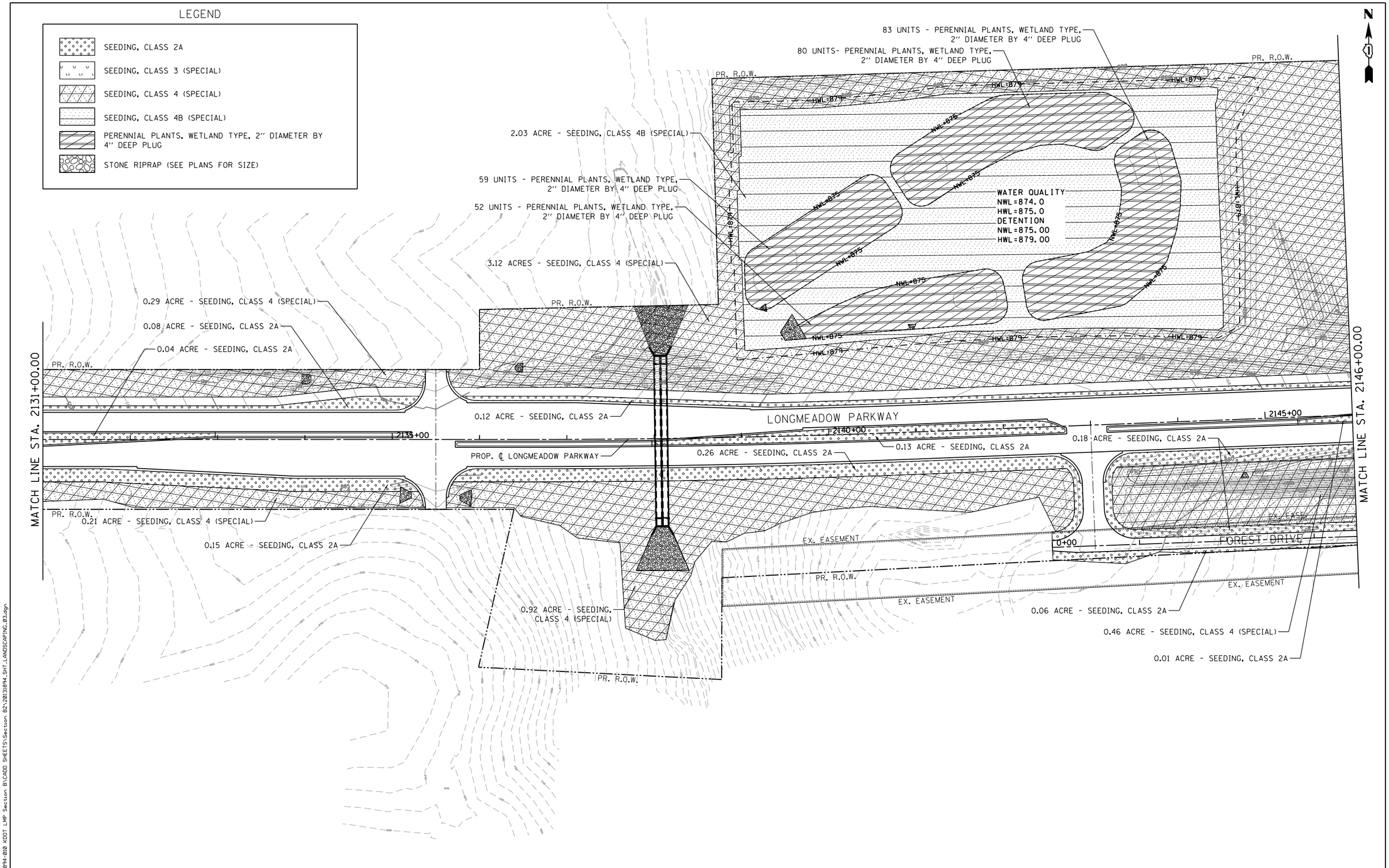

FILE NAME = W:\894-010 KDOT LMP Section B\CADD SHEETS\Section B2\20131894_SHT_LANDSCAPING_03.dgn

Bollinger, Lach & Associates, Inc.
ITASCA, ILLINOIS

USER NAME = dbruckelmeyer	DESIGNED - GJE	REVISED -	
	DRAWN - GJE	REVISED -	
PLOT SCALE = 100.0000 ' / in.	CHECKED - DBB	REVISED -	
PLOT DATE = 9/29/2017	DATE - 08/07/2017	REVISED -	

STATE OF ILLINOIS
DEPARTMENT OF TRANSPORTATION

LONGMEADOW PARKWAY
LANDSCAPING PLAN

SCALE: 1"=50' | SHEET 316 OF 611 SHEETS | STA. 2131+00.00 TO STA. 2146+00.00

F.A.U. RTE.	SECTION	COUNTY	TOTAL SHEETS	SHEET NO.
2298	16-00215-11-PV	KANE	611	316

CONTRACT NO. 61E05

ILLINOIS FED. AID PROJECT

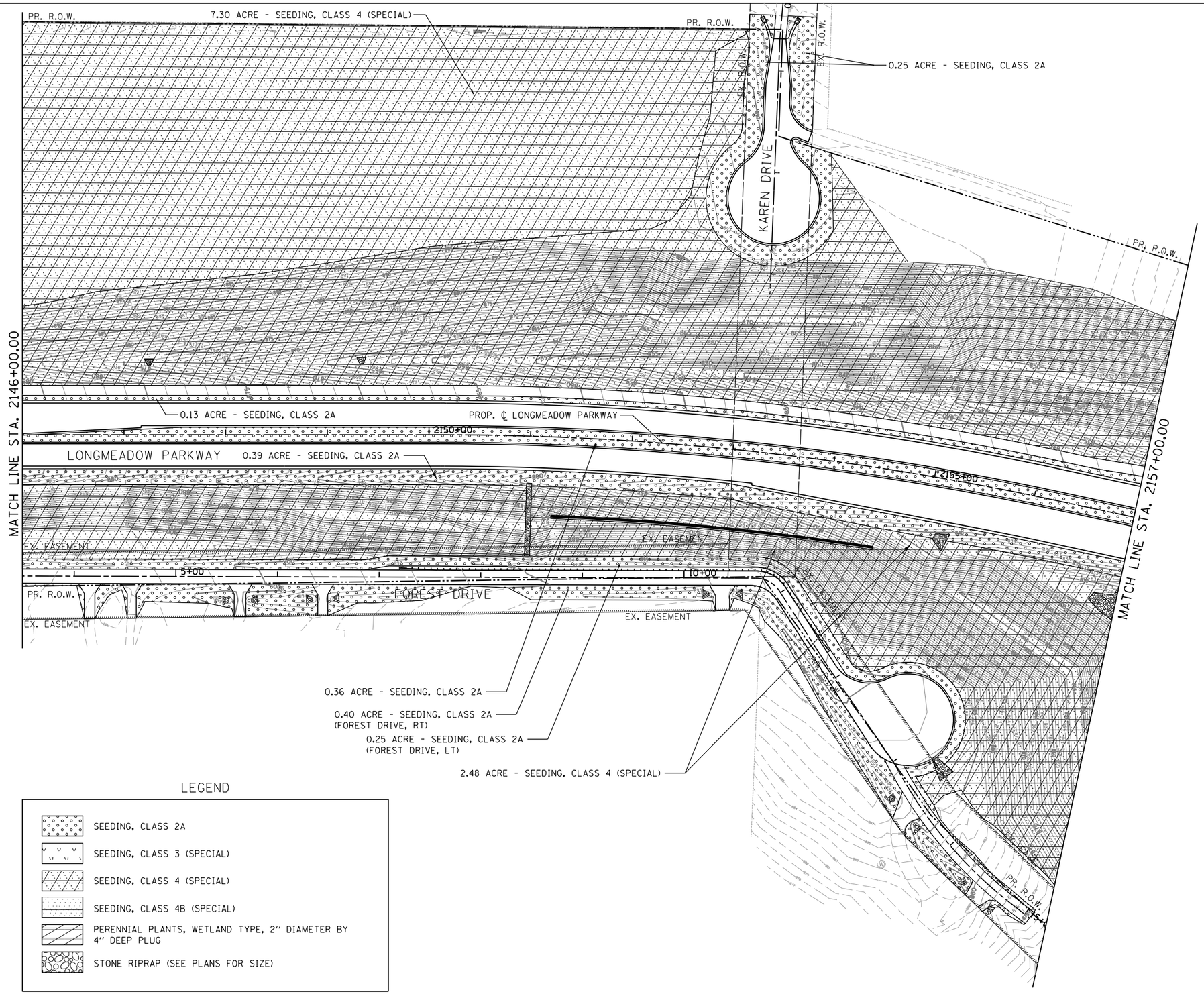

LEGEND

- SEEDING, CLASS 2A
- SEEDING, CLASS 3 (SPECIAL)
- SEEDING, CLASS 4 (SPECIAL)
- SEEDING, CLASS 4B (SPECIAL)
- PERENNIAL PLANTS, WETLAND TYPE, 2" DIAMETER BY 4" DEEP PLUG
- STONE RIPRAP (SEE PLANS FOR SIZE)

FILE NAME = W:\894-010 KDOT LMP Section B\CADD SHEETS\Section B2\2013894_SHT_LANDSCAPING_04.dgn

Bollinger, Lach & Associates, Inc.
ITASCA, ILLINOIS

USER NAME = dbruckelmeyer	DESIGNED - GJE	REVISED -
	DRAWN - GJE	REVISED -
PLOT SCALE = 100.0000 ' / in.	CHECKED - DBB	REVISED -
PLOT DATE = 9/29/2017	DATE - 08/07/2017	REVISED -

STATE OF ILLINOIS
DEPARTMENT OF TRANSPORTATION

LONGMEADOW PARKWAY
LANDSCAPING PLAN

SCALE: 1"=50' | SHEET 317 OF 611 SHEETS | STA. 2146+00.00 TO STA. 2157+00.00

F.A.U. RTE.	SECTION	COUNTY	TOTAL SHEETS	SHEET NO.
2298	16-00215-11-PV	KANE	611	317

CONTRACT NO. 61E05

ILLINOIS FED. AID PROJECT

0.79 ACRE - SEEDING, CLASS 4 (SPECIAL)

SEE ILLINOIS ROUTE 31 LANDSCAPING SHEETS FOR ILLINOIS ROUTE 31 SEEDING DETAILS

PR. R.O.W.

0.03 ACRE - SEEDING, CLASS 2A

0.28 ACRE - SEEDING, CLASS 3 (SPECIAL)

TEMP. EASE.

EX. R.O.W.

PR. R.O.W.

EX. R.O.W.

0.04 ACRE - SEEDING, CLASS 2A

1.18 ACRE - SEEDING, CLASS 3 (SPECIAL)

PR. R.O.W.

MATCH LINE STA. 2157+00.00

MATCH LINE STA. 2172+00.00

0.02 ACRE - SEEDING, CLASS 2A

0.03 ACRE - SEEDING, CLASS 2A

0.12 ACRE - SEEDING, CLASS 2A

LONGMEADOW PARKWAY

2160+00

2165+00

2170+00

1500+00

420+00

3.77 ACRE - SEEDING, CLASS 4 (SPECIAL)

0.25 ACRE - SEEDING, CLASS 2A

PROP. ℄ LONGMEADOW PARKWAY

PR. R.O.W.

0.37 ACRE - SEEDING, CLASS 4 (SPECIAL)

14 UNITS - PERENNIAL PLANTS, WETLAND TYPE, 2" DIAMETER BY 4" DEEP PLUG

HWL=802

NWL=798

ILLINOIS ROUTE 31

0.15 ACRE - SEEDING, CLASS 2A

0.31 ACRE - SEEDING, CLASS 3 (SPECIAL)

11 UNITS - PERENNIAL PLANTS, WETLAND TYPE, 2" DIAMETER BY 4" DEEP PLUG

WATER QUALITY
NWL=796.75
HWL=798
DETENTION
NWL=798.00
HWL=802.00

TEMP. EASE.

9 UNITS - PERENNIAL PLANTS, WETLAND TYPE, 2" DIAMETER BY 4" DEEP PLUG

0.24 ACRE - SEEDING, CLASS 4B (SPECIAL)

15 UNITS - PERENNIAL PLANTS, WETLAND TYPE, 2" DIAMETER BY 4" DEEP PLUG

0.84 ACRE - SEEDING, CLASS 4B (SPECIAL)

PROP. ℄ IL ROUTE 31

1505+00

PROP. ℄ CONNECTOR ROAD

CONNECTOR ROAD

8 UNITS - PERENNIAL PLANTS, WETLAND TYPE, 2" DIAMETER BY 4" DEEP PLUG

1510+00

415+00

PR. R.O.W.

EX. EASE.

0.33 ACRE - SEEDING, CLASS 2A

0.61 ACRE - SEEDING, CLASS 2A

0.27 ACRE - SEEDING, CLASS 4B (SPECIAL)

1.01 ACRE - SEEDING, CLASS 4 (SPECIAL)

EX. R.O.W.

EX. R.O.W.

PR. R.O.W.

SEE ILLINOIS ROUTE 31 LANDSCAPING SHEETS FOR ILLINOIS ROUTE 31 SEEDING DETAILS

0.07 ACRE - SEEDING, CLASS 4 (SPECIAL)

PR. R.O.W.

EX. R.O.W.

EX. R.O.W.

LEGEND

- SEEDING, CLASS 2A
- SEEDING, CLASS 3 (SPECIAL)
- SEEDING, CLASS 4 (SPECIAL)
- SEEDING, CLASS 4B (SPECIAL)
- PERENNIAL PLANTS, WETLAND TYPE, 2" DIAMETER BY 4" DEEP PLUG
- STONE RIPRAP (SEE PLANS FOR SIZE)

FILE NAME = W:\894-010 KDOT LMP Section B\CADD SHEETS\Section B2\20131894_SHT_LANDSCAPING_05.dgn

Bollinger, Lach & Associates, Inc.
ITASCA, ILLINOIS

USER NAME = dbruckelmeyer	DESIGNED - GJE	REVISED -	
	DRAWN - GJE	REVISED -	
PLOT SCALE = 100.0000 ' / in.	CHECKED - DBB	REVISED -	
PLOT DATE = 9/29/2017	DATE - 08/07/2017	REVISED -	

STATE OF ILLINOIS
DEPARTMENT OF TRANSPORTATION

LONGMEADOW PARKWAY
LANDSCAPING PLAN

SCALE: 1"=50' | SHEET 318 OF 611 SHEETS | STA. 2157+00.00 TO STA. 2172+00.00

F.A.U. RTE.	SECTION	COUNTY	TOTAL SHEETS	SHEET NO.
2298	16-00215-11-PV	KANE	611	318

CONTRACT NO. 61E05

ILLINOIS FED. AID PROJECT

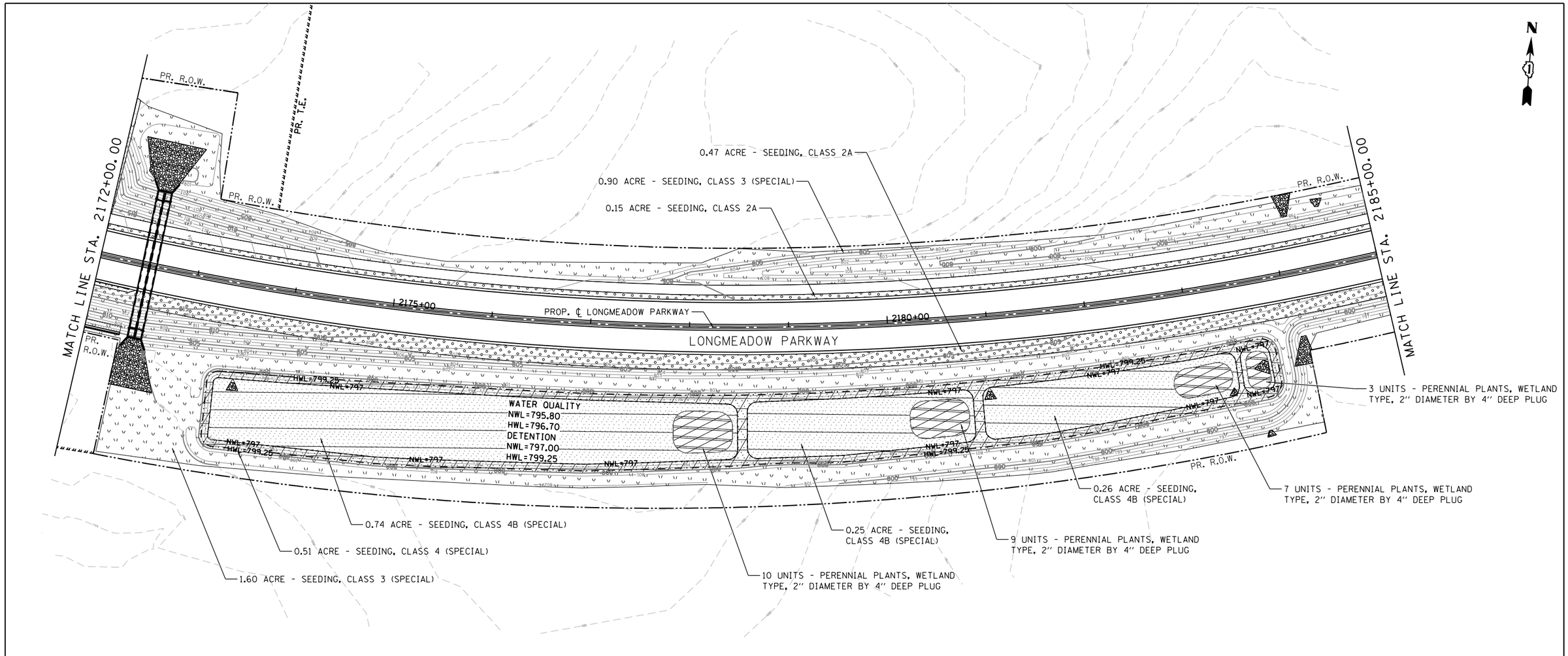

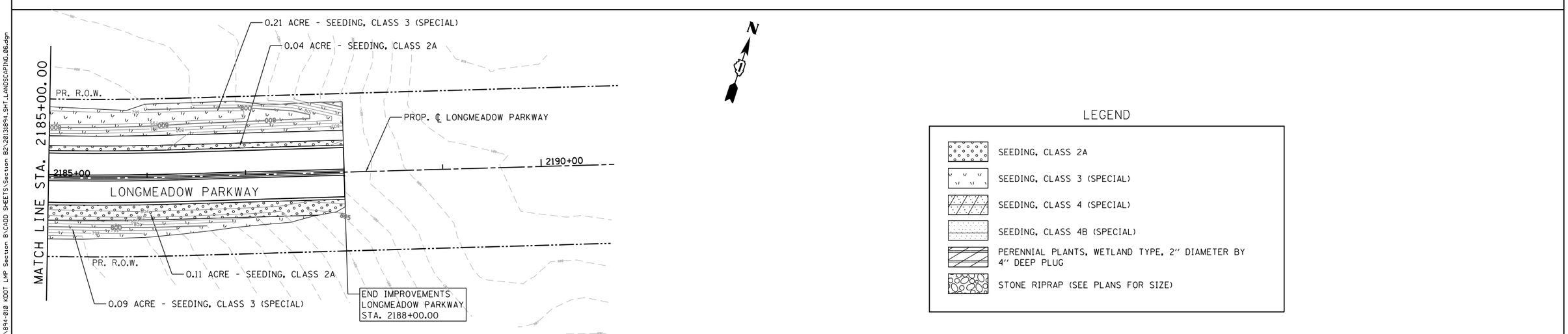

FILE NAME = W:\894-010 KDOT LMP Section B\CADD SHEETS\Section B2\20131894_SHT_LANDSCAPING_06.dgn

Bollinger, Lach & Associates, Inc.
ITASCA, ILLINOIS

USER NAME = gellwanger	DESIGNED - GJE	REVISED -	
	DRAWN - GJE	REVISED -	
PLOT SCALE = 100.0000 ' / in.	CHECKED - DBB	REVISED -	
PLOT DATE = 8/4/2017	DATE - 08/07/2017	REVISED -	

STATE OF ILLINOIS
DEPARTMENT OF TRANSPORTATION

LONGMEADOW PARKWAY
LANDSCAPING PLAN

SCALE: 1"=50' | SHEET 319 OF 611 SHEETS | STA. 2172+00.00 TO STA. 2188+00.00

F.A.U. RTE.	SECTION	COUNTY	TOTAL SHEETS	SHEET NO.
2298	16-00215-11-PV	KANE	611	319

CONTRACT NO. 61E05

ILLINOIS FED. AID PROJECT

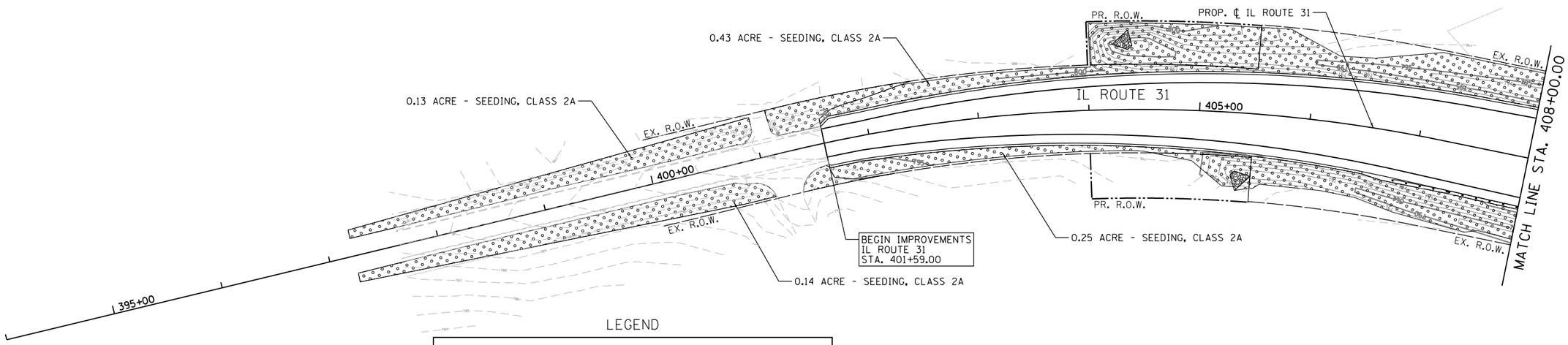

LEGEND

- SEEDING, CLASS 2A
- SEEDING, CLASS 3 (SPECIAL)
- SEEDING, CLASS 4 (SPECIAL)
- SEEDING, CLASS 4B (SPECIAL)
- PERENNIAL PLANTS, WETLAND TYPE, 2" DIAMETER BY 4" DEEP PLUG
- STONE RIPRAP (SEE PLANS FOR SIZE)

SEE LONGMEADOW PARKWAY LANDSCAPING SHEETS FOR LONGMEADOW PARKWAY & CONNECTOR ROAD SEEDING DETAILS

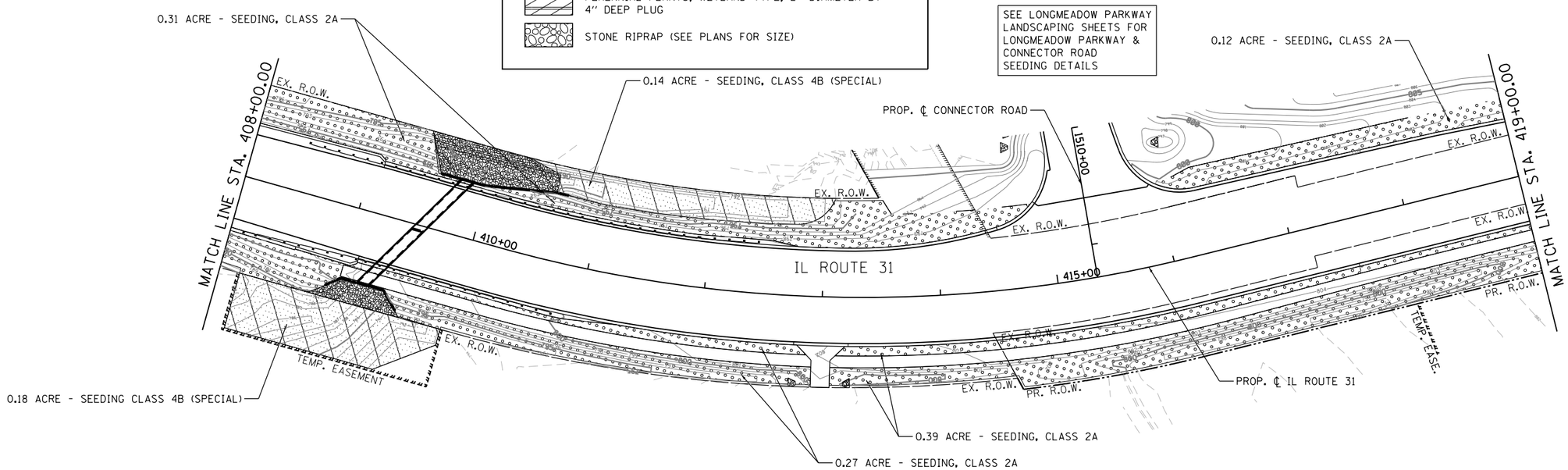

FILE NAME = W:\894-010 KDOT LMP Section B\CADD SHEETS\Section B2\20131894_SHT_LANDSCAPING_07.dgn

Bollinger, Lach & Associates, Inc. ITASCA, ILLINOIS	USER NAME = gellwanger	DESIGNED - GJE	REVISED -	STATE OF ILLINOIS DEPARTMENT OF TRANSPORTATION	IL ROUTE 31 LANDSCAPING PLAN	F.A.U. RTE.	SECTION	COUNTY	TOTAL SHEETS / SHEET NO.
		DRAWN - GJE	REVISED -			2298	16-00215-11-PV	KANE	611 / 320
	PLOT SCALE = 100.0000 ' / in.	CHECKED - DBB	REVISED -					CONTRACT NO. 61E05	
	PLOT DATE = 8/4/2017	DATE - 08/07/2017	REVISED -		SCALE: 1"=50' SHEET 320 OF 611 SHEETS STA. 408+00.00 TO STA. 419+00.00		ILLINOIS FED. AID PROJECT		

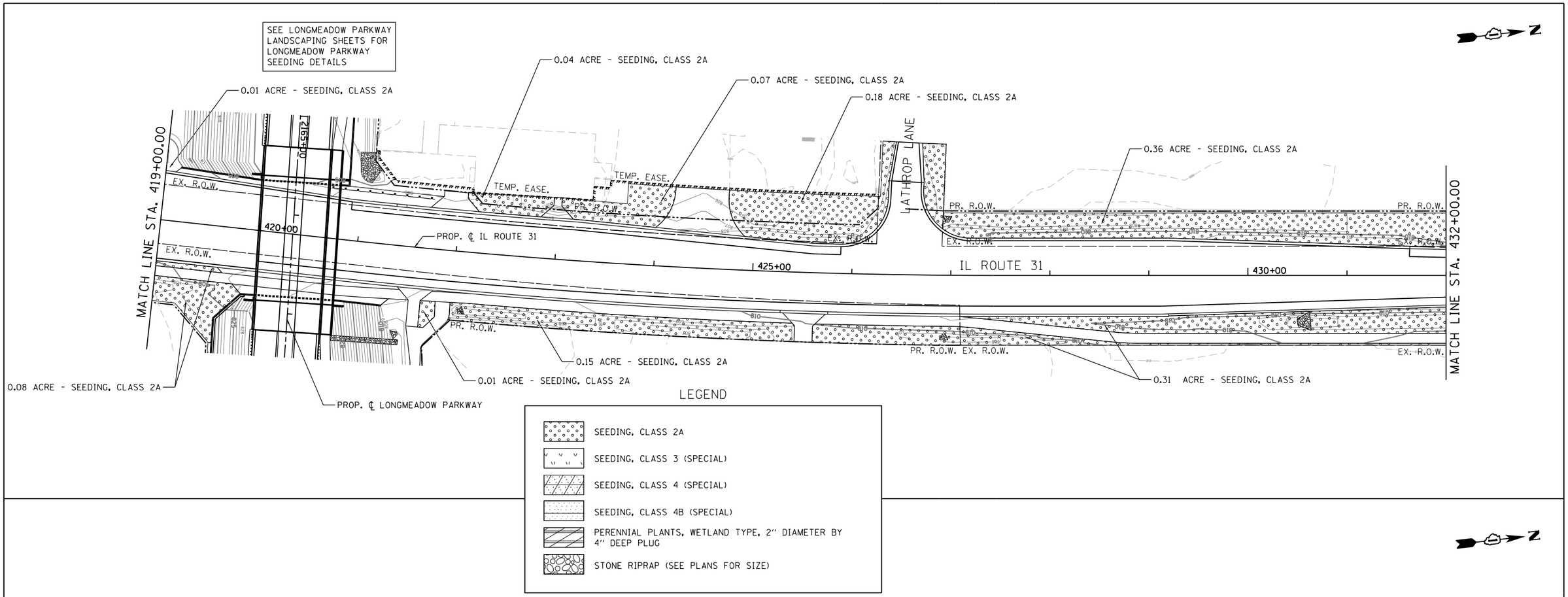

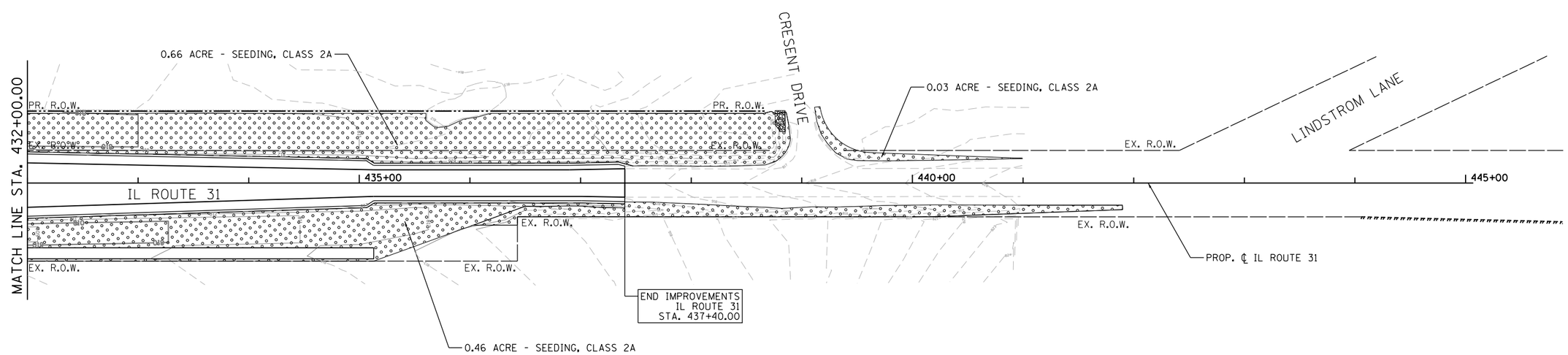

FILE NAME = W:\894-010 KDOT LMP Section B1\CADD SHEETS\Section B2\20131894_SHT_LANDSCAPING_08.dgn

Bollinger, Lach & Associates, Inc.
ITASCA, ILLINOIS

USER NAME = gellwanger	DESIGNED - GJE	REVISED -	
	DRAWN - GJE	REVISED -	
PLOT SCALE = 100.0000 ' / in.	CHECKED - DBB	REVISED -	
PLOT DATE = 8/4/2017	DATE - 08/07/2017	REVISED -	

STATE OF ILLINOIS
DEPARTMENT OF TRANSPORTATION

IL ROUTE 31
LANDSCAPING PLAN

SCALE: 1"=50' | SHEET 321 OF 611 SHEETS | STA. 419+00.00 TO STA. 445+00.00

F.A.U. RTE.	SECTION	COUNTY	TOTAL SHEETS	SHEET NO.
2298	16-00215-11-PV	KANE	611	321

CONTRACT NO. 61E05

ILLINOIS FED. AID PROJECT

LEGEND

- SEEDING, CLASS 2A
- SEEDING, CLASS 3 (SPECIAL)
- SEEDING, CLASS 4 (SPECIAL)
- SEEDING, CLASS 4B (SPECIAL)
- PERENNIAL PLANTS, WETLAND TYPE, 2" DIAMETER BY 4" DEEP PLUG
- STONE RIPRAP (SEE PLANS FOR SIZE)

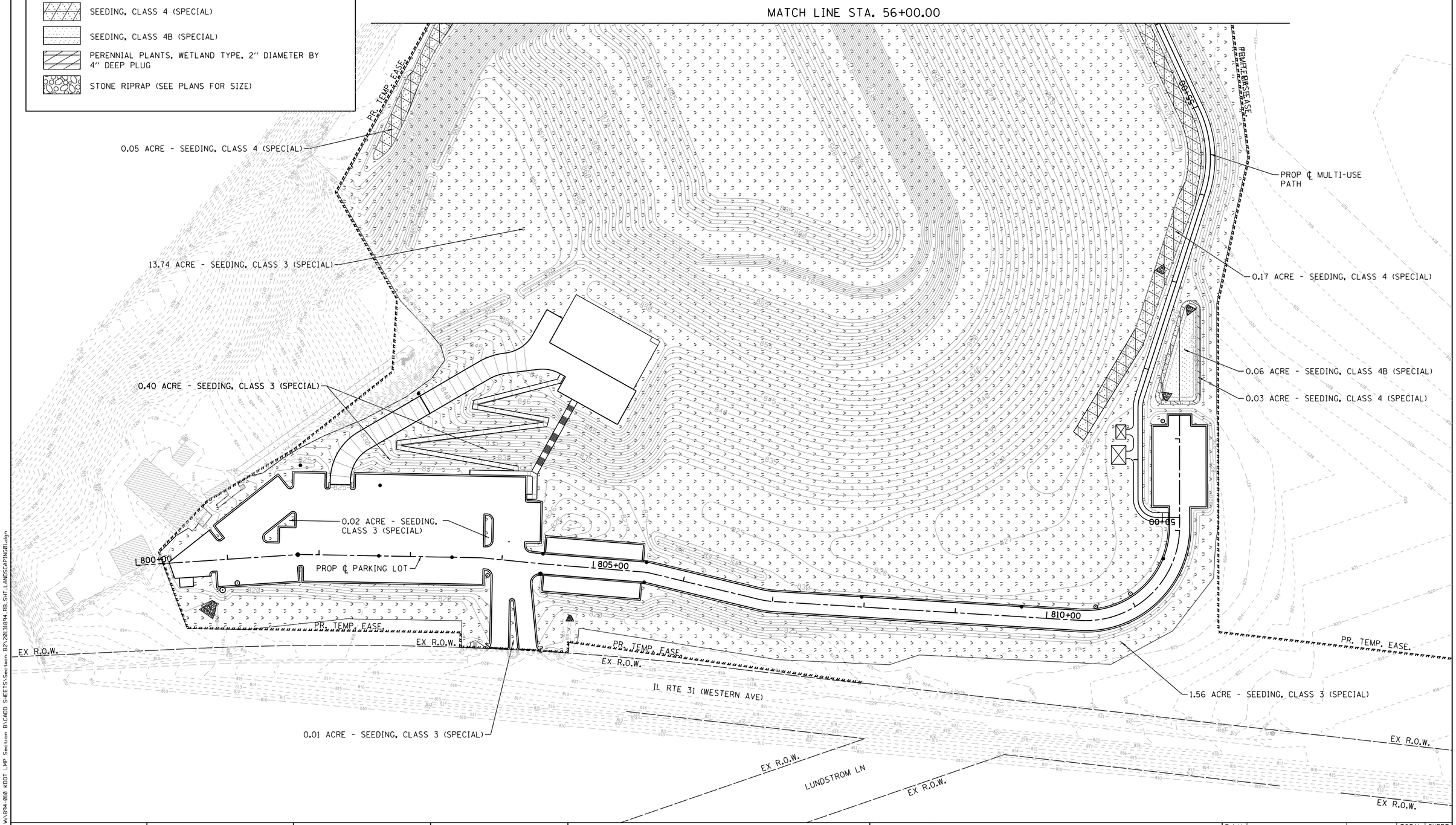

Bollinger, Lach & Associates, Inc. ITASCA, ILLINOIS	USER NAME = gellwanger	DESIGNED - GJE	REVISED -	STATE OF ILLINOIS DEPARTMENT OF TRANSPORTATION	RAGING BUFFALO LANDSCAPING PLAN	F.A.U. RTE.	SECTION	COUNTY	TOTAL SHEETS / SHEET NO.
		DRAWN - GJE	REVISED -			2298	16-00215-11-PV	KANE	611 / 322
	PLOT SCALE = 100.0000 ' / in.	CHECKED - DBB	REVISED -					CONTRACT NO. 61E05	
	PLOT DATE = 8/4/2017	DATE - 08/07/2017	REVISED -		SCALE: 1"=50' SHEET 322 OF 611 SHEETS STA. TO STA.		ILLINOIS FED. AID PROJECT		

FILE NAME = W:\894-010 KDOT LMP Section B\CADD SHEETS\Section B2\2013894_RB_SHT_LANDSCAPING01.dgn

LEGEND

- SEEDING, CLASS 2A
- SEEDING, CLASS 3 (SPECIAL)
- SEEDING, CLASS 4 (SPECIAL)
- SEEDING, CLASS 4B (SPECIAL)
- PERENNIAL PLANTS, WETLAND TYPE, 2" DIAMETER BY 4" DEEP PLUG
- STONE RIPRAP (SEE PLANS FOR SIZE)

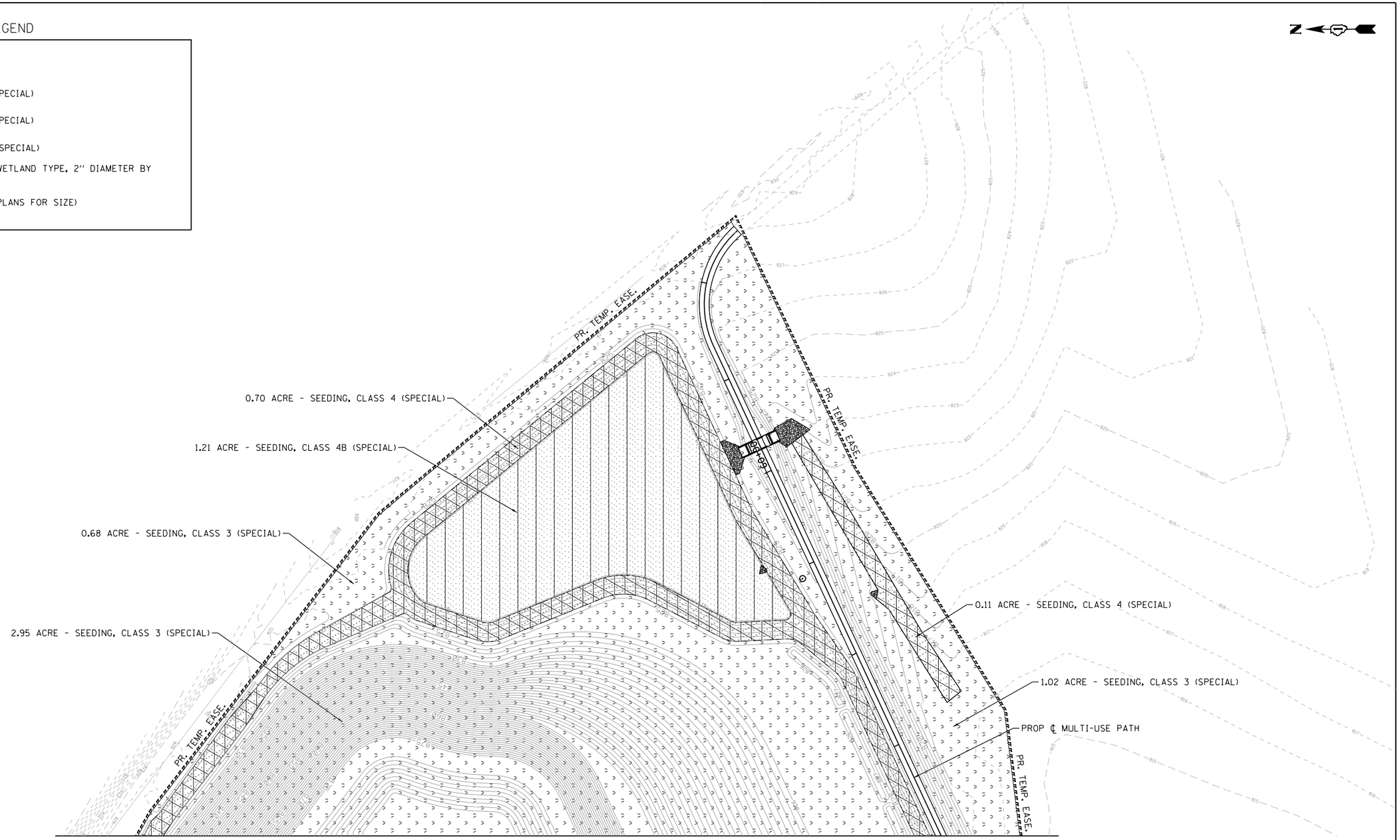

FILE NAME = W:\894-010 KDOT LMP Section B\CADD SHEETS\Section B2\20131894_RB_SHT_LANDSCAPING02.dgn

Bollinger, Lach & Associates, Inc. ITASCA, ILLINOIS	USER NAME = gellwanger	DESIGNED - GJE	REVISED -	STATE OF ILLINOIS DEPARTMENT OF TRANSPORTATION	RAGING BUFFALO LANDSCAPING PLAN	F.A.U. RTE.	SECTION	COUNTY	TOTAL SHEETS	SHEET NO.
		DRAWN - GJE	REVISED -			2298	16-00215-11-PV	KANE	611	323
	PLOT SCALE = 100.0000 ' / in.	CHECKED - DBB	REVISED -					CONTRACT NO. 61E05		
	PLOT DATE = 8/4/2017	DATE - 08/07/2017	REVISED -		SCALE: 1"=50' SHEET 323 OF 611 SHEETS STA. TO STA.		ILLINOIS FED. AID PROJECT			

TREE PLANTING GENERAL NOTES:

1. THE CONTRACTOR SHALL COORDINATE THE PLANTING, LANDSCAPING AND RESTORATION WORK WITH WORK BY THE GRADING CONTRACTOR AND OTHER UTILITY CONTRACTORS. THE RESTORATION AND PLANTING WORK SHALL BE COMPLETED AS DIRECTED BY THE ENGINEER, NOTWITHSTANDING THE PLANTING RESTRICTIONS AS DESCRIBED IN THE STANDARD SPECIFICATIONS AND THE SPECIAL PROVISIONS.

2. ALL PLANT MATERIAL NOT PLANTED ACCORDING TO THE SPECIFIED SEASONAL DATE SHALL REQUIRE PRIOR WRITTEN APPROVAL FROM THE ENGINEER. FAILURE TO SECURE SUCH APPROVAL WILL RESULT IN THE REJECTION OF THE PLANT MATERIAL AND THE REPLACEMENT SHALL BE AT NO ADDITIONAL COST TO THE CONTRACT.

3. ALL WORK SHALL BE IN ACCORDANCE WITH SECTIONS 253 AND 254 OF THE STANDARD SPECIFICATIONS, THE SPECIAL PROVISIONS AND THE DETAILS SHOWN ON THE PLANS. THE CONTRACTOR SHALL FURNISH THE INITIAL WATERING AND ALL ADDITIONAL WATERING DURING THE PERIOD OF ESTABLISHMENT.

4. THE INTENT OF THE PLANTING PLAN IS TO LOOK NATURAL AND PLEASANT. THE CONTRACTOR SHALL GROUP THE TREES AND SCRUBS TO LOOK NATURAL IN A SOMEWHAT RANDOM ORDER.

5. THE CONTRACTOR SHALL BE CAREFUL WHEN PLANTING TREES AND SCRUBS NEAR AN INTERSECTION TO AVOID THE NECESSARY SIGHT TRIANGLE OF APPROACHING TRAFFIC. IF IN DOUBT, THE CONTRACTOR SHALL CONSULT WITH THE ENGINEER REGARDING CLEAR DISTANCE OF THE SIGHT TRIANGLE.

6. THE CONTRACTOR SHALL VERIFY THE LOCATIONS AND DEPTH OF ANY UNDERGROUND UTILITIES PRIOR TO EXCAVATION OR CONSTRUCTION.

7. THE CONTRACTOR SHALL FOLLOW THE PLANTING PLANS AND MAY ADJUST LOCATIONS TO FIT FIELD CONDITIONS, BUT SHALL NOT INSTALL TREES DIRECTLY ABOVE ANY MAJOR DRAINAGE CULVERTS.

8. THE CONTRACTOR SHALL SCHEDULE PLANT MATERIAL TO KEEP UP WITH THE PLANTING OPERATION. IF PLANTINGS ARE NOT PLANTED IMMEDIATELY AFTER DELIVERY TO THE JOB SITE, THE CONTRACTOR SHALL HARBOR THE PLANTINGS AS DESCRIBED IN ARTICLE 253.06 OF THE STANDARD SPECIFICATIONS FOR TEMPORARY STORAGE.

TREE PLANTING LEGEND

- SHADE TREE
- ORNAMENTAL TREE
- EVERGREEN TREE

TREE PLANTING BILL OF MATERIALS

ITEM NUMBER	PLAN LABEL	ITEM NAME	SIZE	UNIT	QTY
SHADE TREES					
A2000220	AFM2.5	TREE, ACER X FREEMANII MARMO (MARMO FREEMAN MAPLE)	2 1/2" C	EACH	70
A2001614	ASF2.5	TREE, ACER SACCHARINUM MORTON (CRESCENDO SUGAR MAPLE)	2 1/2" C	EACH	22
A2001820	ASM2.5	TREE, ACER SACCHARUM GREEN MOUNTAIN (GREEN MOUNTAIN SUGAR MAPLE)	2 1/2" C	EACH	30
A2001916	AFI2.5	TREE, ACER SACCHARUM LEGACY (LEGACY SUGAR MAPLE)	2 " C	EACH	6
A2001916	ASP2.5	TREE, ACER SACCHARUM LEGACY (LEGACY SUGAR MAPLE)	2 " C	EACH	8
A2002009	AEO2.5	TREE, AESCULUS FLAVEA (YELLOW SWEET BUCKEYE)	2 1/2" C	EACH	20
A2002020	AGL2.5	TREE, AESCULUS GLABRA (OHIO BUCKEYE)	2 1/2" C	EACH	15
A2002612	COV2.5	TREE, CARYA CORDIFORMUS (BITTERNUT HICKORY)	11/2" C	EACH	22
A2002820	CSP2.5	TREE, CATALPA SPECIOSA (NORTHERN CATALPA)	2 1/2" C	EACH	40
A2002920	CCH2.5	TREE, CELTIS OCCIDENTALIS (COMMON HACKBERRY)	2 1/2" C	EACH	74
A2004514	GBA2.5	TREE, GINKGO BILOBA AUTUMN GOLD (AUTUMN GOLD GINKGO)	2 1/2" C	EACH	69
A2004720	GTS2.5	TREE, GLEDITSIA TRIACANTHOS INERMIS SHADEMASTER (SHADEMASTER THORNLESS COMMON HONEYLOCUST)	2 1/2" C	EACH	49
A2005020	GDI2.5	TREE, GYMNOCLADUS DIOICUS (KENTUCKY COFFEETREE)	2 1/2" C	EACH	113
A2005520	NSY2.5	TREE, NYSSA SYLVATICA (BLACK TUPELO)	2 1/2" C	EACH	28
A2005620	OVI2.5	TREE, OSTRYA VIRGINIANA (AMERICAN HOPHORNBEAM)	2 1/2" C	EACH	33
A2005920	PLB2.5	TREE, PLATANUS X ACERIFOLIA BLOODGOOD (BLOODGOOD LONDON PLANETREE)	2 1/2" C	EACH	39
A2005960	PMT2.5	TREE, PLATANUS X ACERIFOLIA MORTON CIRCLE (EXCLAMATION LONDON PLANETREE)	2 1/2" C	EACH	53
A2006516	QBI2.5	TREE, QUERCUS BICOLOR (SWAMP WHITE OAK)	2" C	EACH	43
A2006716	QMA2.5	TREE, QUERCUS MACROCARPA (BUR OAK)	2" C	EACH	11
A2007116	QRU2.5	TREE, QUERCUS RUBRA (RED OAK)	2" C	EACH	47
A2007132	QSC2.5	TREE, QUERCUS SCHUETTI (SWAMP BUR OAK)	2" C	EACH	18
A2007820	TAM2.5	TREE, TILIA AMERICANA (AMERICAN LINDEN/ BASSWOOD)	2 1/2" C	EACH	78
A2007920	TAR2.5	TREE, TILIA AMERICANA REDMOND (REDMOND AMERICAN LINDEN)	2 1/2" C	EACH	20
A2008470	UMS2.5	TREE, ULMUS AMERICANA PRINCETON (PRINCETON AMERICAN ELM)	2 1/2" C	EACH	18
A2008519	UMG2.5	TREE, ULMUS MORTON GLOSSY (TRIUMPH ELM)	2 1/2" C	EACH	79
A2008819	UVF2.5	TREE, ULMUS AMERICANA VALLEY FORGE (VALLEY FORGE AMERICAN ELM)	2 1/2" C	EACH	19
A2016616	QCI2.5	TREE, QUERCUS ELLIPSOIDALIS (HILL'S OAK)	2" C	EACH	33
B2010120	CLU2.5	TREE, CLADRASTIS LUTEA (AMERICAN YELLOWWOOD)	2 1/2" C	EACH	19
INTERMEDIATE TREES					
B2001167	CCD.08	TREE, CERCIS CANADENSIS (EASTERN REDBUD)	8' HT	EACH	7
B2001266	COA.08	TREE, CORNUS ALTERNIFOLIA (PAGODA DOG WOOD)	6' HT	EACH	7
B2001770	CCI.08	TREE, CRATAEGUS CRUSGALLI VAR. INERMIS (THORNLESS COCKSPUR HAWTHORN)	8' HT	EACH	22
B2005068	MSN.08	TREE, MALUS SNOWDRIFT (SNOWDRIFT CRABAPPLE)	7' HT	EACH	18
B2006168	SPM.08	TREE, SYRINGA PEKINENSIS MORTON (CHINA SNOW PEKING LILAC)	7' HT	EACH	34
B2010165	CKG.08	TREE, CORNUS KOUSA (KOUSA DOGWOOD)	5' HT	EACH	9
B2013468	MRP.08	TREE, MALUS GOLDEN RAINDROPS (GOLDEN RAINDROPS CRABAPPLE)	2" C	EACH	8
EVERGREEN TREES					
D2001988	PAD.08	EVERGREEN, PICEA GLAUCA DENSATA (BLACK HILLS SPRUCE)	8' HT	EACH	7
D2002188	PAP.08	EVERGREEN, PICEA PUNGENS (COLORADO SPRUCE)	8' HT	EACH	9
D2002788	PNI.08	EVERGREEN, PINUS NIGRA (AUSTRIAN PINE)	8' HT	EACH	24
DECIDUOUS SHRUBS					
C2005972	RGL.08	SHRUB, RHUS GLABRA (SMOOTH SUMAC)	6' HT	EACH	36
C2006060	RHT.05	SHRUB, RHUS TYPHINA (STAGHORN SUMAC)	5' HT	EACH	50
C2012772	VPR.08	SHRUB, VIBURNUM PRUNIFOLIUM (BLACKHAW VIBURNUM)	6' HT	EACH	32

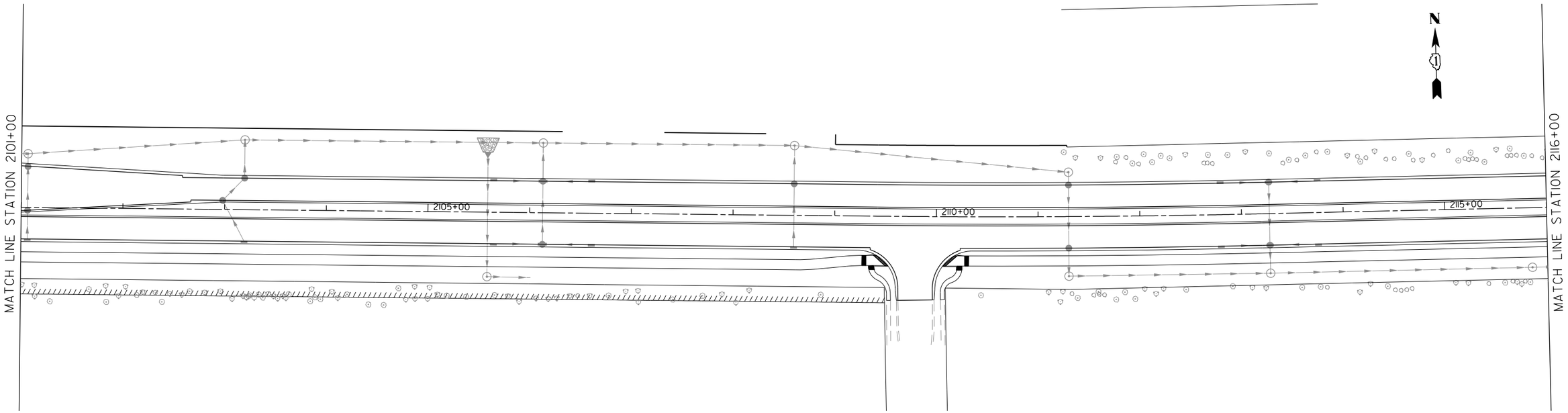

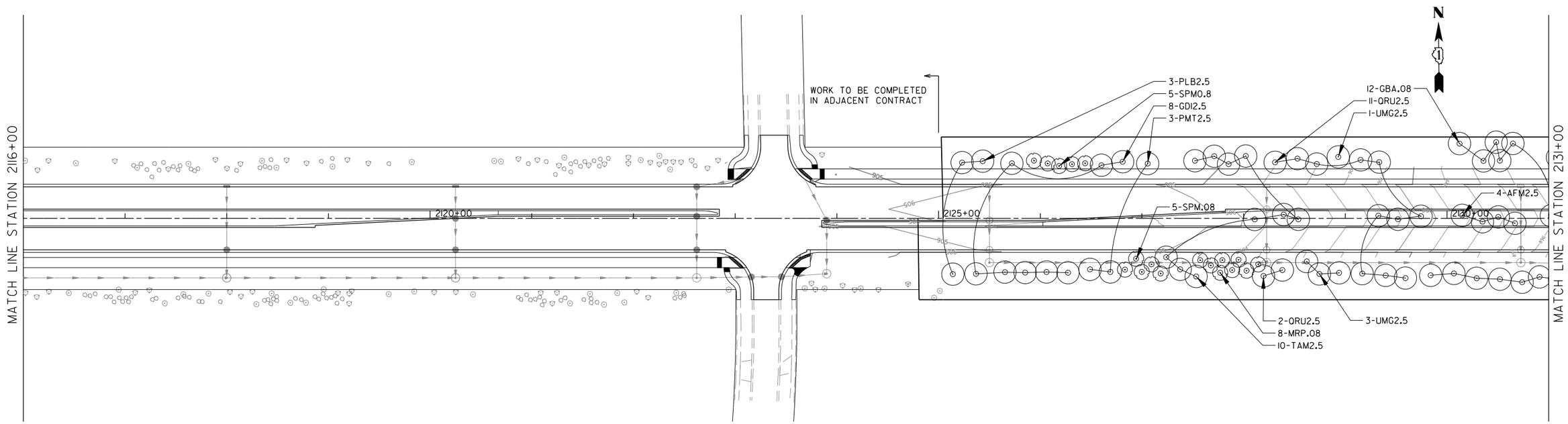

FILE NAME = G:\CHI3\0189\Road\Sheets - B2 Contract\20131894-SHT-Landscaping-02.dgn

HITCHCOCK DESIGN GROUP creating better places

USER NAME = mbmcwhorter	DESIGNED - MWO	REVISED -	
	DRAWN - BSH	REVISED -	
PLOT SCALE = 100.0000 ' / in.	CHECKED - TK	REVISED -	
PLOT DATE = 9/25/2017	DATE - 8/7/2017	REVISED -	

STATE OF ILLINOIS
DEPARTMENT OF TRANSPORTATION

TREE PLANTING PLAN
LONGMEADOW PARKWAY

SCALE: 1" = 50' | SHEET 325 OF 611 SHEETS | STA. 2101+00 TO STA. 2131+00

F.A.P. RTE.	SECTION	COUNTY	TOTAL SHEETS	SHEET NO.
2298	16-00215-11-PV	KANE	611	325
		CONTRACT NO. 61E05		

FED. ROAD DIST. NO. 1 | ILLINOIS | FED. AID PROJECT

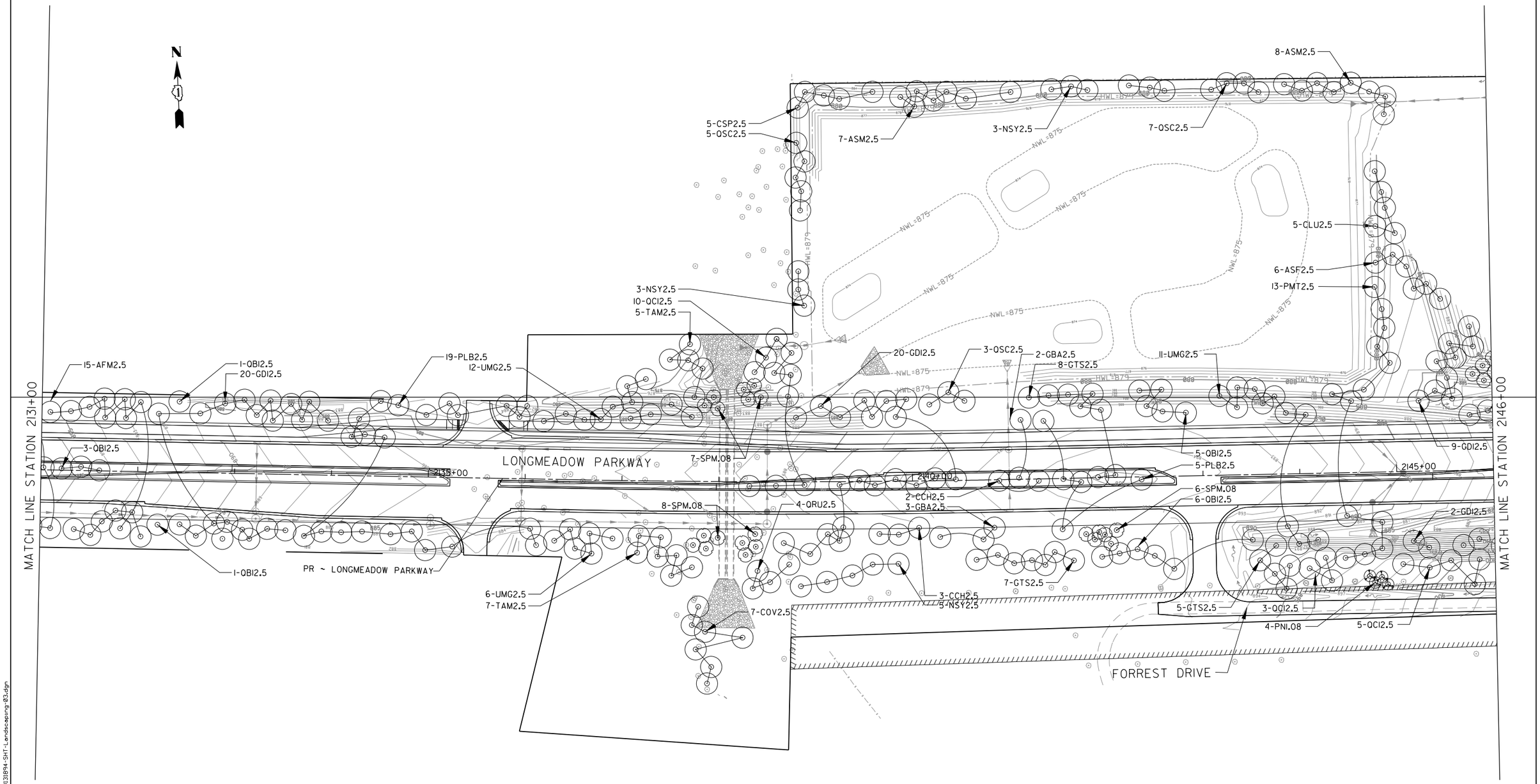

FILE NAME = G:\CH13\0109\Road\Sheets - B2 Contract\20131894-SHT-Landscaping-03.dgn

HITCHCOCK DESIGN GROUP
creating better places

USER NAME = mbmcwhorter	DESIGNED - MWO	REVISED -	
	DRAWN - BSH	REVISED -	
PLOT SCALE = 100.0000 ' / in.	CHECKED - TK	REVISED -	
PLOT DATE = 10/9/2017	DATE - 8/7/2017	REVISED -	

STATE OF ILLINOIS
DEPARTMENT OF TRANSPORTATION

TREE PLANTING PLAN
LONGMEADOW PARKWAY

SCALE: 1" = 50' | SHEET 326 OF 611 SHEETS | STA. 2131+00 TO STA. 2157+00

F.A.P. RTE.	SECTION	COUNTY	TOTAL SHEETS	SHEET NO.
2298	16-00215-11-PV	KANE	611	326
		CONTRACT NO. 61E05		
FED. ROAD DIST. NO. 1	ILLINOIS	FED. AID PROJECT		

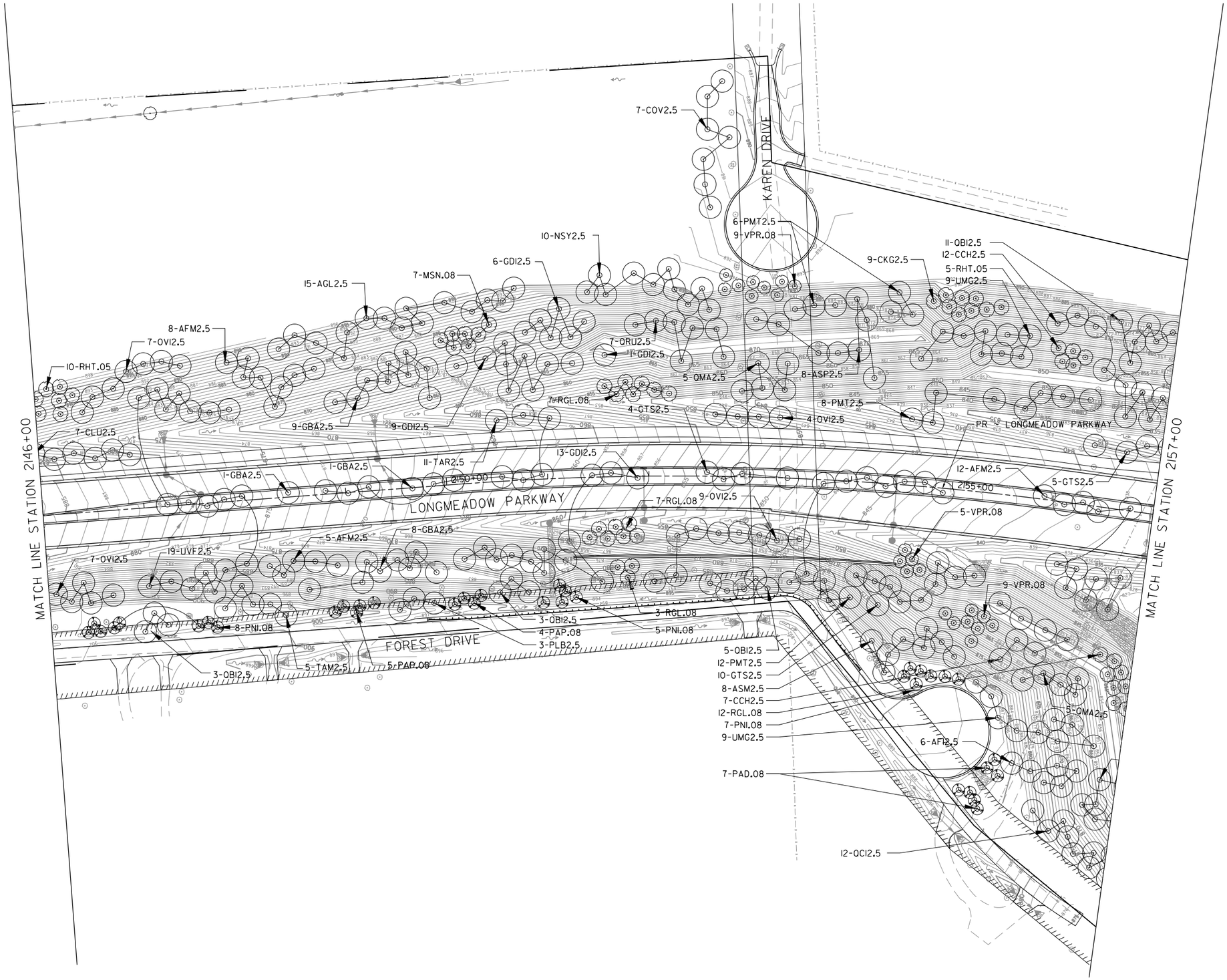

FILE NAME = G:\CH13\0109\Road\Sheets - B2 Contract\2013894-SHT-Landscaping-04.dgn

HITCHCOCK DESIGN GROUP creating better places

USER NAME = mbmcwhorter	DESIGNED - MW	REVISED -	
	DRAWN - AT	REVISED -	
PLOT SCALE = 100.0000 ' / in.	CHECKED - TK	REVISED -	
PLOT DATE = 9/25/2017	DATE - 8/7/2017	REVISED -	

STATE OF ILLINOIS
DEPARTMENT OF TRANSPORTATION

TREE PLANTING PLAN
LONGMEADOW PARKWAY

SCALE: 1" = 50' | SHEET 327 OF 611 SHEETS | STA. 2146+00 TO STA. 2157+00

F.A.P. RTE.	SECTION	COUNTY	TOTAL SHEETS	SHEET NO.
2298	16-00215-11-PV	KANE	611	327
		CONTRACT NO. 61E05		

FED. ROAD DIST. NO. 1 | ILLINOIS | FED. AID PROJECT

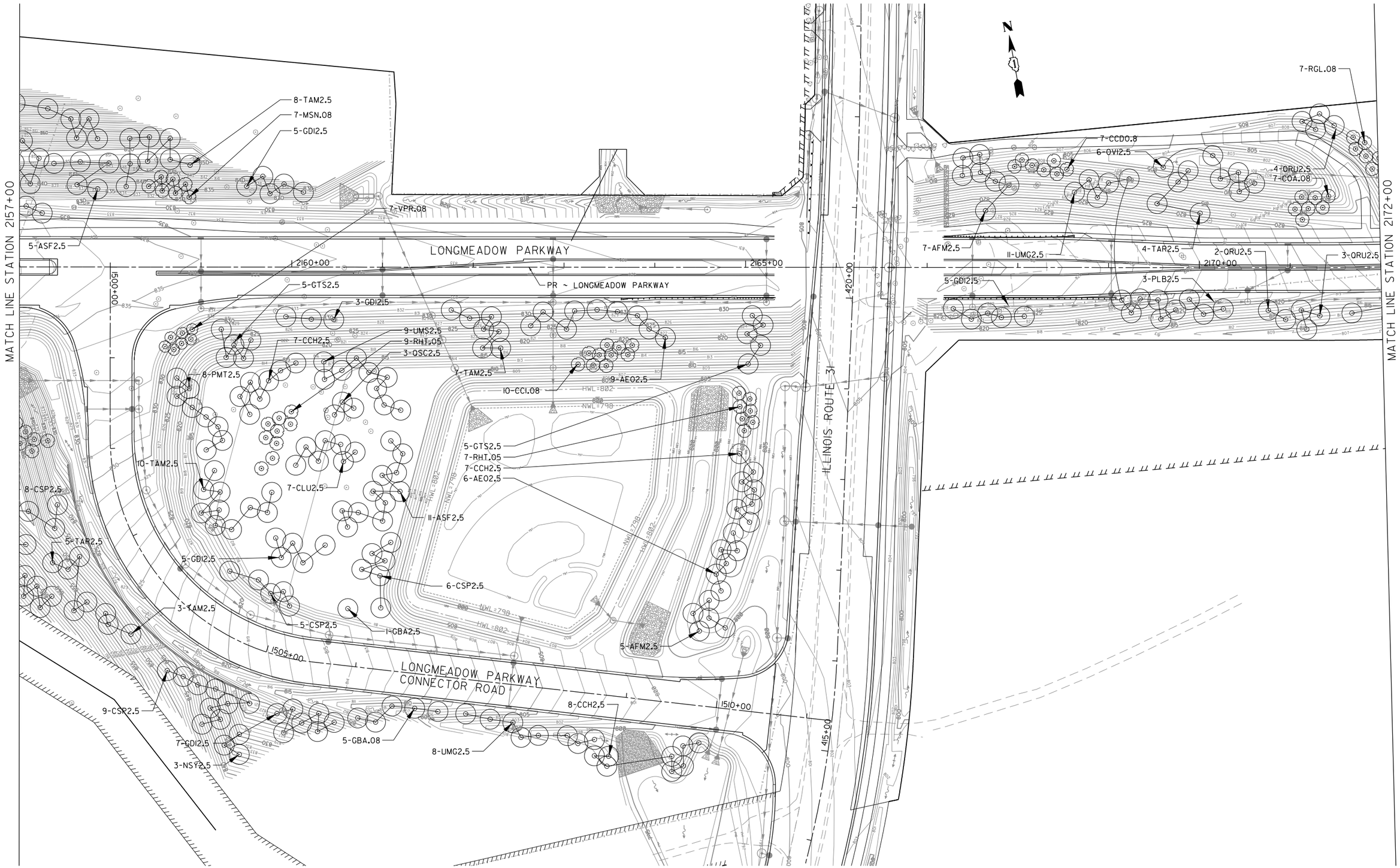

FILE NAME = G:\CHI3\0109\Road\Sheets - B2 Contract\2013894-SHT-Landscaping-05.dgn

HITCHCOCK DESIGN GROUP creating better places

USER NAME = mbmcwhorter	DESIGNED - MW	REVISED -	
	DRAWN - AZ MFD	REVISED -	
PLOT SCALE = 100.0000 ' / in.	CHECKED - TS BSH	REVISED -	
PLOT DATE = 9/25/2017	DATE - 8/7/2017	REVISED -	

STATE OF ILLINOIS
DEPARTMENT OF TRANSPORTATION

TREE PLANTING PLAN
LONGMEADOW PARKWAY

SCALE: 1" = 50' | SHEET 328 OF 611 SHEETS | STA. 2157+00 TO STA. 2172+00

F.A.P. RTE.	SECTION	COUNTY	TOTAL SHEETS	SHEET NO.
2298	16-00215-11-PV	KANE	611	328

CONTRACT NO. 61E05

FED. ROAD DIST. NO. 1 | ILLINOIS | FED. AID PROJECT

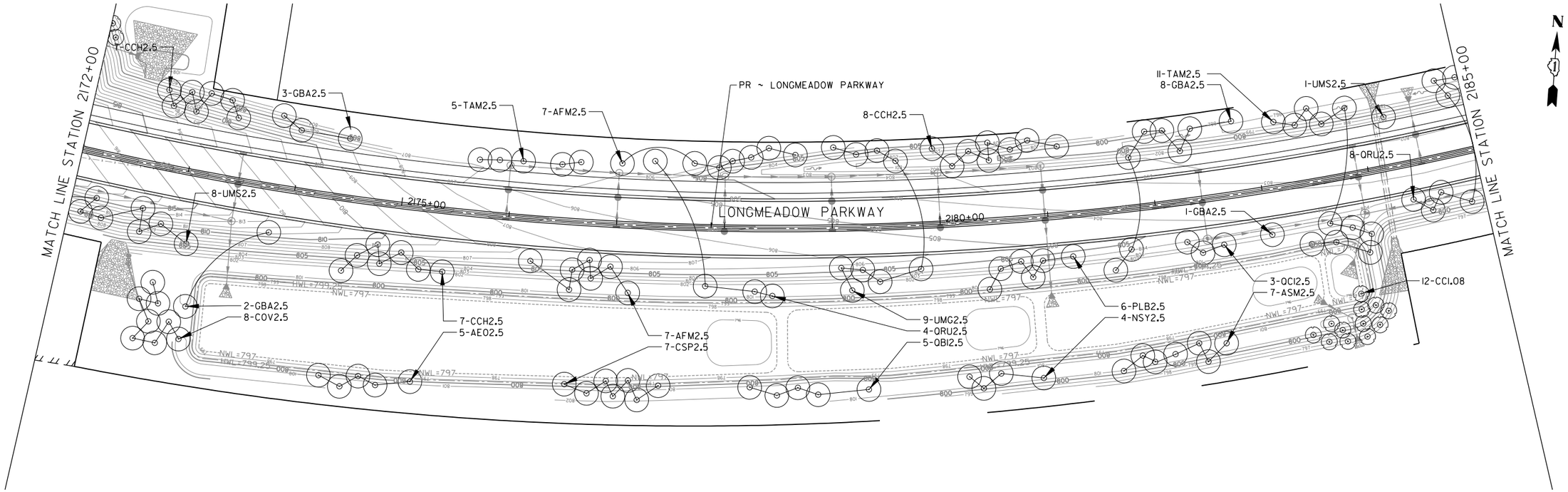

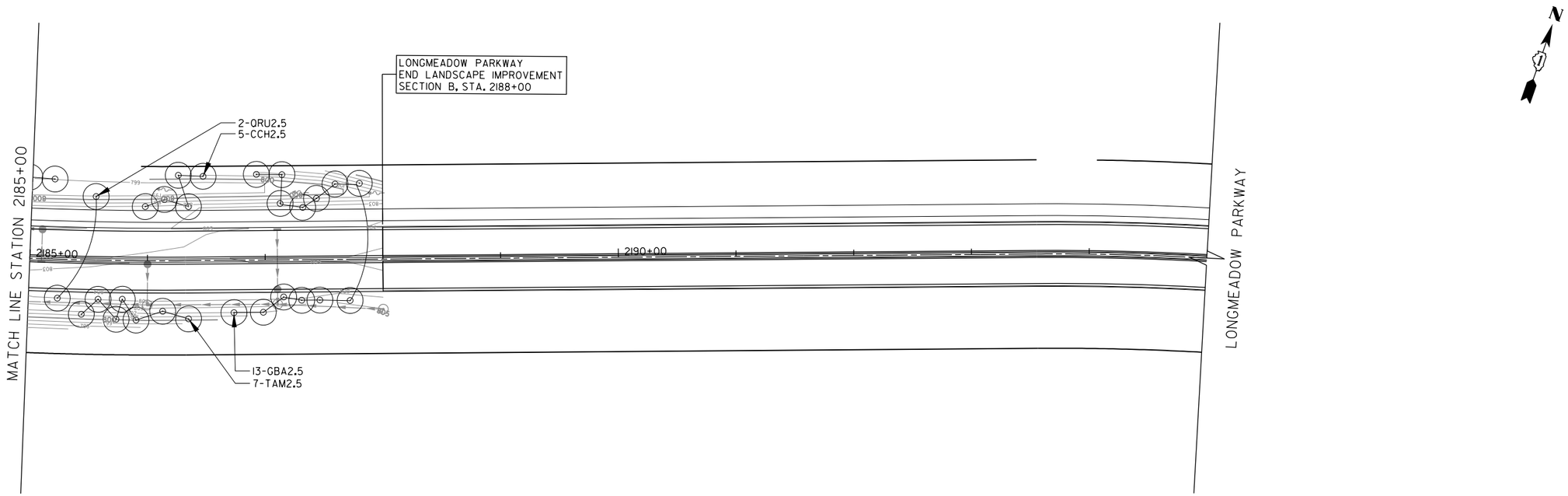

FILE NAME = G:\CHI3\0109\Road\Sheets - B2 Contract\20131894-SHT-Landscaping-06.dgn

HITCHCOCK DESIGN GROUP creating better places

USER NAME = mbmcwhorter	DESIGNED - MWO	REVISED -	
	DRAWN - BSH	REVISED -	
PLOT SCALE = 100.0000 ' / in.	CHECKED - TK	REVISED -	
PLOT DATE = 9/25/2017	DATE - 8/7/2017	REVISED -	

STATE OF ILLINOIS
DEPARTMENT OF TRANSPORTATION

TREE PLANTING PLAN
LONGMEADOW PARKWAY

SCALE: 1" = 50' | SHEET 329 OF 611 SHEETS | STA. 2172+00 TO STA. 2195+00

F.A.P. RTE.	SECTION	COUNTY	TOTAL SHEETS	SHEET NO.
2298	16-00215-11-PV	KANE	611	329
		CONTRACT NO. 61E05		

FED. ROAD DIST. NO. 1 | ILLINOIS | FED. AID PROJECT

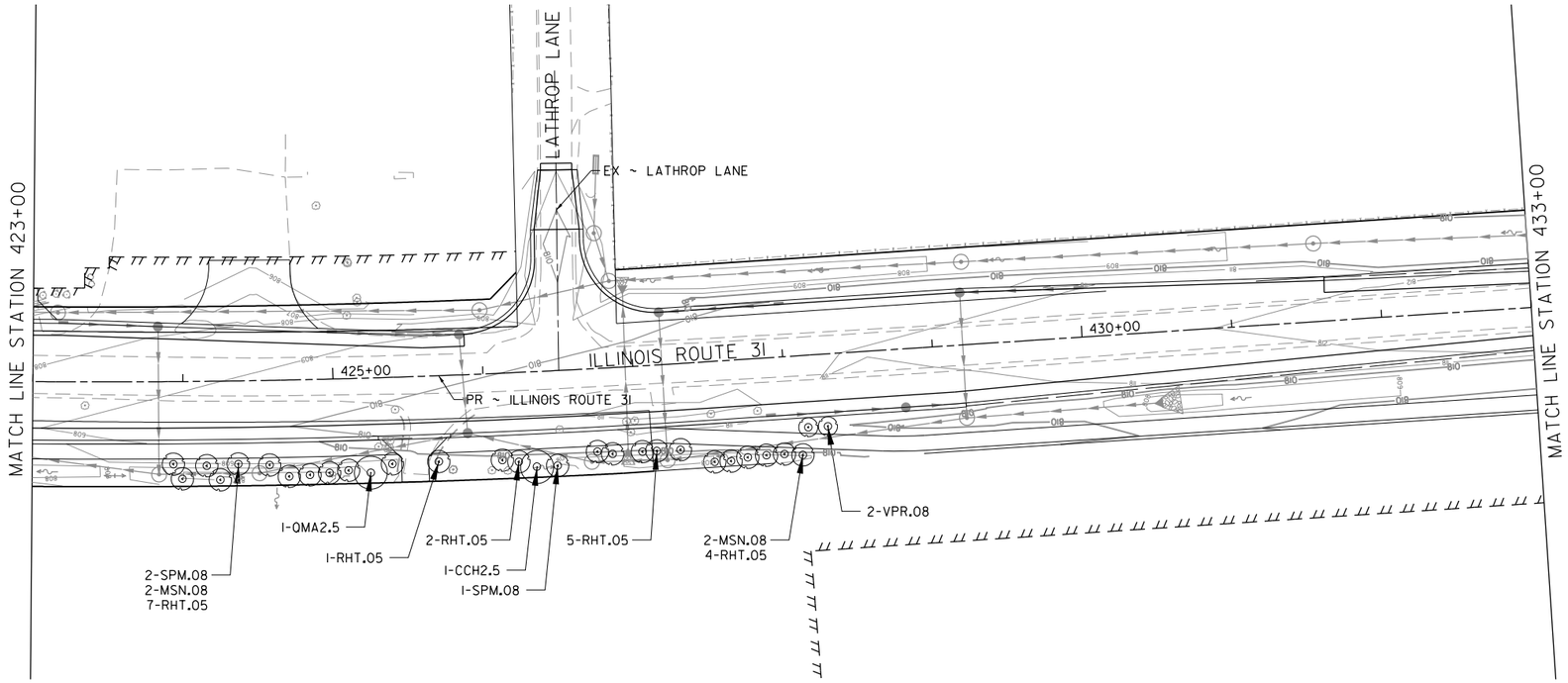

N

FILE NAME = G:\CHI3\0109\Road\Sheets - B2 Contract\20131894-SHT-Landscaping-07.dgn

HITCHCOCK DESIGN GROUP creating better places

USER NAME = mbmcwhorter	DESIGNED - MWO	REVISED -	
	DRAWN - BSH	REVISED -	
PLOT SCALE = 100.0000 ' / in.	CHECKED - TK	REVISED -	
PLOT DATE = 9/25/2017	DATE - 8/7/2017	REVISED -	

STATE OF ILLINOIS
DEPARTMENT OF TRANSPORTATION

TREE PLANTING PLAN
ILLINOIS ROUTE 31

SCALE: 1" = 50' | SHEET 330 OF 611 SHEETS | STA. 423+00 TO STA. 433+00

F.A.P. RTE.	SECTION	COUNTY	TOTAL SHEETS	SHEET NO.
2298	16-00215-11-PV	KANE	611	330
		CONTRACT NO. 61E05		

FED. ROAD DIST. NO. 1 | ILLINOIS | FED. AID PROJECT

SHEET NOT USED

FILE NAME = G:\CH13\0189\Road\Sheets - B2 Contract\2013894-SHT-LANDSCAPING DETAILS.dgn

HITCHCOCK DESIGN GROUP creating better places

USER NAME = mbmcwhorter	DESIGNED - MW	REVISED -	
	DRAWN - AT	REVISED -	
PLOT SCALE = 20.0000 ' / in.	CHECKED - TK	REVISED -	
PLOT DATE = 9/25/2017	DATE - 8/7/2017	REVISED -	

STATE OF ILLINOIS
DEPARTMENT OF TRANSPORTATION

LONGMEADOW PARKWAY
TREE PLANTING DETAILS

SCALE: N.T.S. | SHEET 331 OF 611 SHEETS

F.A.P. RTE.	SECTION	COUNTY	TOTAL SHEETS	SHEET NO.
2298	16-00215-11-PV	KANE	611	331
		CONTRACT NO. 61E05		

FED. ROAD DIST. NO. 1 | ILLINOIS | FED. AID PROJECT

TRAFFIC SIGNAL LEGEND

ITEM	REMOVAL	EXISTING	PROPOSED
CONTROLLER CABINET	R		
RAILROAD CONTROL CABINET			
COMMUNICATIONS CABINET	R CC	ECC	CC
MASTER CONTROLLER		EMC	MC
MASTER MASTER CONTROLLER		EMMC	MMC
UNINTERRUPTABLE POWER SUPPLY	R UPS	EUPS	UPS
SERVICE INSTALLATION, (P) POLE OR (G) GROUND MOUNT	R	P	P
TELEPHONE CONNECTION (P) POLE OR (G) GROUND MOUNT	R T	P T	P T
STEEL MAST ARM ASSEMBLY AND POLE	R		
ALUMINUM MAST ARM ASSEMBLY AND POLE	R		
STEEL COMBINATION MAST ARM ASSEMBLY AND POLE WITH LUMINAIRE	R		
STEEL COMBINATION MAST ARM ASSEMBLY AND POLE WITH PTZ CAMERA	R PTZ	PTZ	PTZ
SIGNAL POST	R		
TEMPORARY WOOD POLE (CLASS 5 OR BETTER) 45 FOOT (13.7m) MINIMUM	R		
GUY WIRE	R		
SIGNAL HEAD	R		
SIGNAL HEAD CONSTRUCTION STAGES (NUMBERS INDICATE THE CONSTRUCTION STAGE)			2
SIGNAL HEAD WITH BACKPLATE	R		
SIGNAL HEAD OPTICALLY PROGRAMMED	R "P"	"P"	"P"
FLASHER INSTALLATION (S DENOTES SOLAR POWER)	R "F"	"F"	"F"
PEDESTRIAN SIGNAL HEAD	R		
PEDESTRIAN PUSHBUTTON DETECTOR	R		
ACCESSIBLE PEDESTRIAN PUSHBUTTON DETECTOR	R APS	APS	APS
ILLUMINATED SIGN "NO LEFT TURN"	R		
ILLUMINATED SIGN "NO RIGHT TURN"	R		
DETECTOR LOOP, TYPE I			
PREFORMED DETECTOR LOOP		P	P
MICROWAVE VEHICLE SENSOR	R M	M	M
VIDEO DETECTION CAMERA	R V	V	V
VIDEO DETECTION ZONE			
PAN, TILT, ZOOM CAMERA	R PTZ	PTZ	PTZ
WIRELESS DETECTOR SENSOR	R W	W	W
WIRELESS ACCESS POINT	R		

ITEM	REMOVAL	EXISTING	PROPOSED
EMERGENCY VEHICLE LIGHT DETECTOR	R		
CONFIRMATION BEACON	R		
HANDHOLE	R		
HEAVY DUTY HANDHOLE	R H	H	H
DOUBLE HANDHOLE	R		
JUNCTION BOX	R		
UNDERGROUND CONDUIT, GALVANIZED STEEL (UC)			
TEMPORARY SPAN WIRE, TETHER WIRE, AND CABLE	R		
COMMON TRENCH			CT
COILABLE NONMETALLIC CONDUIT (EMPTY)			CNC
SYSTEM ITEM		S	S
INTERSECTION ITEM		I	IP
REMOVE ITEM	R		
RELOCATE ITEM	RL		
ABANDON ITEM	A		
12" (300mm) TRAFFIC SIGNAL SECTION		R	R
12" (300mm) RED WITH 8" (200mm) YELLOW AND GREEN TRAFFIC SIGNAL FACE		R Y G	
SIGNAL FACE		R Y G Y G	R Y G Y G
SIGNAL FACE WITH BACKPLATE. "P" INDICATES PROGRAMMED HEAD "RB" INDICATES REFLECTIVE BACKPLATE		R Y G Y G "P"	R Y G Y G "P"
12" (300mm) PEDESTRIAN SIGNAL HEAD WALK/DON'T WALK SYMBOL		DW W	
12" (300mm) PEDESTRIAN SIGNAL HEAD INTERNATIONAL SYMBOL, OUTLINED			
12" (300mm) PEDESTRIAN SIGNAL HEAD INTERNATIONAL SYMBOL, SOLID			
PEDESTRIAN SIGNAL HEAD, INTERNATIONAL SYMBOL, WITH COUNTDOWN TIMER		C D	C D
RADIO INTERCONNECT	R		
RADIO REPEATER	R ERR	ERR	RR
DENOTES NUMBER OF CONDUCTORS, ELECTRIC CABLE NO. 14, UNLESS NOTED OTHERWISE, ALL DETECTOR LOOP CABLE TO BE SHIELDED		5	5
GROUND CABLE IN CONDUIT NO. 6 SOLID COPPER (GREEN)		1	1

ITEM	REMOVAL	EXISTING	PROPOSED
ELECTRIC CABLE IN CONDUIT, TRACER, NO. 14 1/C, UNLESS NOTED OTHERWISE		1	1
COAXIAL CABLE		C	C
VENDOR CABLE FOR CAMERA		V	V
COPPER INTERCONNECT CABLE, NO. 18 3 PAIR TWISTED, SHIELDED		6	6
FIBER OPTIC CABLE NO. 62.5/125, MM12F		12F	
FIBER OPTIC CABLE NO. 62.5/125, MM12F SM12F		24F	24F
FIBER OPTIC CABLE NO. 62.5/125, MM12F SM24F		36F	36F
GROUND ROD AT (C) CONTROLLER, (H) HANDHOLE, (P) POST, (M) MAST ARM, OR (S) SERVICE		C	C
CONTROLLER CABINET AND FOUNDATION TO BE REMOVED	RCF		
STEEL MAST ARM POLE AND FOUNDATION TO BE REMOVED	RMF		
ALUMINUM MAST ARM POLE AND FOUNDATION TO BE REMOVED	RMF		
STEEL COMBINATION MAST ARM ASSEMBLY AND POLE WITH LUMINAIRE AND FOUNDATION TO BE REMOVED	RMF		
SIGNAL POST AND FOUNDATION TO BE REMOVED	RPF		
INTERSECTION & SAMPLING (SYSTEM) DETECTOR		IS	IS
SAMPLING (SYSTEM) DETECTOR		S	S
QUEUE DETECTOR		Q	Q
PREFORMED QUEUE DETECTOR		PQ	PQ
PREFORMED INTERSECTION AND SAMPLING (SYSTEM) DETECTOR		PIS	PIS
PREFORMED SAMPLING (SYSTEM) DETECTOR		PS	PS

RAILROAD SYMBOLS

	EXISTING	PROPOSED
RAILROAD CONTROL CABINET		
RAILROAD CANTILEVER MAST ARM		
FLASHING SIGNAL		
CROSSING GATE		
CROSSBUCK		

FILE NAME = c:\pw_work\pwidot\footemj\d0108315\ts05.dgn	USER NAME = footemj	DESIGNED - DAG/BCK	REVISED - DAG 1-1-14
		DRAWN - BCK	REVISED -
	PLOT SCALE = 50.0000 ' / in.	CHECKED - DAD	REVISED -
	PLOT DATE = 1/13/2014	DATE - 10-28-09	REVISED -

STATE OF ILLINOIS
DEPARTMENT OF TRANSPORTATION

DISTRICT ONE
STANDARD TRAFFIC SIGNAL DESIGN DETAILS

SCALE: NONE | SHEET NO. 1 OF 7 SHEETS | STA. TO STA.

F.A.P. RTE.	SECTION	COUNTY	TOTAL SHEETS	SHEET NO.
2298	16-00215-11-PV	KANE	611	332
	TS-05	CONTRACT NO. 61E05		
FED. ROAD DIST. NO. 1	ILLINOIS	FED. AID PROJECT		

LOOP DETECTOR NOTES

1. EACH PAIR OF LOOP WIRES SHALL BE PLACED IN A SEPARATE EMPTY COILABLE NONMETALLIC CONDUIT FROM THE EDGE OF PAVEMENT TO THE HANDHOLE. SPACING BETWEEN THE HOLES DRILLED IN THE PAVEMENT SHALL NOT BE LESS THAN 6" (150 mm). EMPTY COILABLE NONMETALLIC CONDUIT SHALL BE INCLUDED IN THE COST OF THE LOOP WIRE.

2. THE NUMBER OF LOOP TURNS SHALL BE AS RECOMMENDED BY THE AMPLIFIER MANUFACTURER. ALL ADJACENT SIDES OF THE LOOPS SHALL BE INSTALLED IN SUCH A WAY THAT THE CURRENT FLOW IS IN THE SAME DIRECTION TO REINFORCE ITS MAGNETIC FIELDS FOR SMALL VEHICLE DETECTION.

3. EACH LOOP LEAD-IN SHALL BE IDENTIFIED AND PERMANENTLY TAGGED IN THE HANDHOLE. EACH LEAD-IN CABLE TAG SHALL INDICATE THE LOCATION OF THE LOOP, LOOP ROTATION (CLOCKWISE/COUNTERCLOCKWISE), LOOP LEAD-IN DIRECTION (IN OR OUT), LOOP CABLE NUMBER AND LOCATION IN CABINET, AND NUMBER OF TURNS IN THE DETECTOR LOOPS IN WATER PROOF INK AS INDICATED ON THE DISTRICT 1 STANDARD TRAFFIC SIGNAL DESIGN DETAIL. THE CONTRACTOR SHALL MARK LOOP LOCATIONS ON RECORD DRAWINGS AND PRESENT TO THE ENGINEER AFTER FINAL INSPECTION. LOOPS SHALL BE MARKED BY LANE AND LOOP NUMBER. SEE DETAIL BELOW.

4. ALL LOOP CABLE SHALL BE FASTENED WITH PLASTIC TIE WRAP TO THE HANDHOLE HOOKS.

5. IN ASPHALT PAVEMENT, LOOPS SHOULD BE PLACED IN THE BINDER AND DIVEHOLES MARKED AT THE CURB WITH A SAW-CUT. THE SAW-CUT SHALL BE CUT IN ACCORDANCE WITH LOCAL AND E.P.A. DUST CONTROL REQUIREMENTS. DETECTOR LOOP(S) SHALL NOT BE INSTALLED IN WET CONDITIONS AND THE SAW-CUTS MUST BE FREE OF DEBRIS AND RESIDUE SUCH AS DUST AND WATER WHICH IS TO BE ACHIEVED BY THE USE OF COMPRESSED AIR, WIRE BRUSHING AND HEAT DRYING ACCORDING TO SEALANT MANUFACTURER REQUIREMENTS. THE DETECTOR WIRE SHALL BE HELD IN PLACE BY THE USE OF FORM WEDGES. WEDGES SHALL BE SPACED NO MORE THAN 18" (450 mm) APART.

6. LOOP SPLICES SHALL BE SOLDERED USING A SOLDERING IRON. BLOW TORCHES OR OTHER DEVICES WHICH OXIDIZE COPPER CABLE SHALL NOT BE ALLOWED FOR SOLDERING OPERATIONS. SEE DETAIL BELOW RIGHT.

7. PREFORMED DETECTOR LOOPS SHALL BE USED, AS SHOWN ON THE PLANS, WHERE NEW CONCRETE PAVEMENT IS PROPOSED. THE INSTALLATION OF PREFORMED LOOPS SHALL BE IN ACCORDANCE WITH THE DISTRICT 1 SPECIFICATIONS OR AS DIRECTED BY THE ENGINEER.

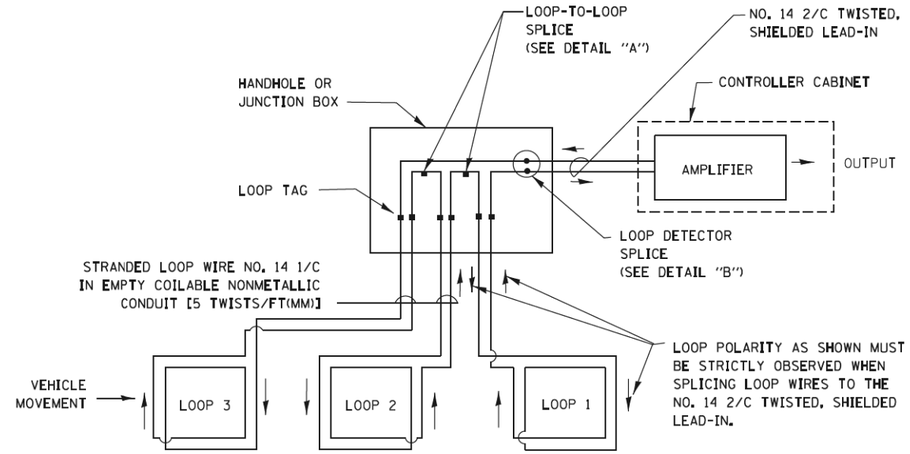

DETECTOR LOOP WIRING SCHEMATIC

- LOOPS SHALL BE SPLICED IN SERIES.
- SAW-CUTS SHALL BE A MINIMUM WIDTH OF 5/16" (8 mm).
- SAW-CUT DEPTHS SHALL BE 3" (75 mm). IF IN CONCRETE, THE SAW-CUT DEPTH SHALL BE TO THE TOP OF THE REINFORCEMENT.
- LOOP CORNERS SHALL BE DRILLED WITH A 2" (50 mm) DIAMETER CORE.

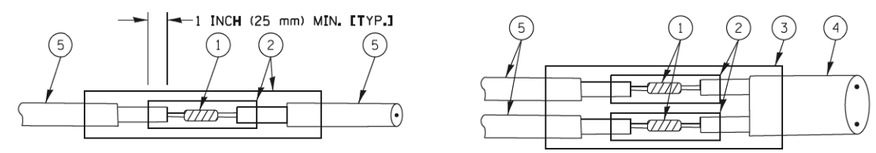

DETAIL "A"
LOOP-TO-LOOP SPLICE

DETAIL "B"
LOOP-TO-CONTROLLER SPLICE

TYPE I LOOP

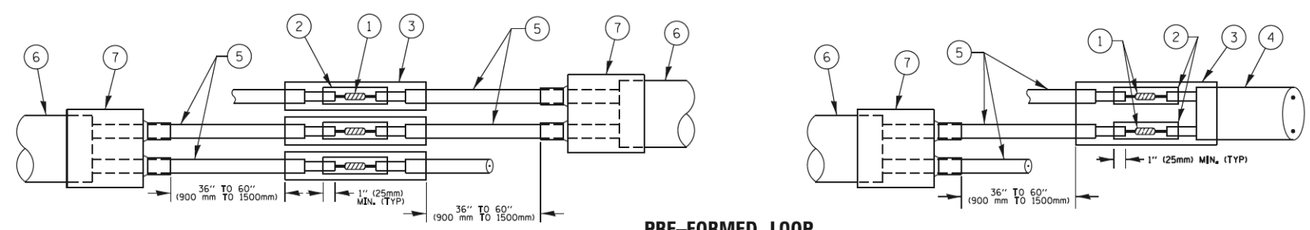

DETAIL "A"
LOOP-TO-LOOP SPLICE

PRE-FORMED LOOP

DETAIL "B"
LOOP-TO-CONTROLLER SPLICE

LOOP LEAD-IN CABLE TAG

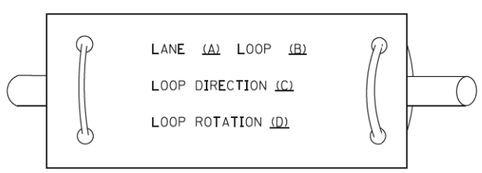

A. LANE 1 IS THE LANE CLOSEST TO THE CENTERLINE OF THE ROADWAY

B. LOOP #1 IS THE LOOP IN THE LANE CLOSEST TO THE INTERSECTION.

C. LABEL LOOP CABLE "IN" OR LOOP CABLE "OUT".

D. LABEL LOOP CABLE CLOCKWISE OR LOOP CABLE COUNTERCLOCKWISE.

LOOP DETECTOR SPLICE

1. WESTERN UNION SPLICE SOLDERED WITH ROSIN CORE FLUX. ALL EXPOSED SURFACES OF THE SOLDER SHALL BE SMOOTH. THE WESTERN UNION SPLICES SHALL BE STAGGERED.
2. WCSMW 30/100 HEAT SHRINK TUBE, MINIMUM LENGTH 3" (75 mm), UNDERWATER GRADE.
3. WCS 200/750 HEAT SHRINK TUBE, MINIMUM LENGHT 6" (150 mm), UNDERWATER GRADE.
4. NO. 14 2/C TWISTED, SHIELDED CABLE.
5. LOOP CONDUCTOR WITH FLEXIBLE PLASTIC TUBE.
6. PRE-FORMED LOOP
7. XL POLYOLEFIN 2 CONDUCTOR BREAKOUT SEALS, TYCO CBR-2 OR APPROVED EQUAL

FILE NAME = c:\pw_work\pwidot\footemj\d0108315\ts05.dgn	USER NAME = footemj	DESIGNED - DAD	REVISED - DAG 1-1-14	STATE OF ILLINOIS DEPARTMENT OF TRANSPORTATION	DISTRICT ONE STANDARD TRAFFIC SIGNAL DESIGN DETAILS			F.A.P. RTE.	SECTION	COUNTY	TOTAL SHEETS / SHEET NO.
		DRAWN - BCK	REVISED -					2298	16-00215-11-PV	KANE	611 / 333
	PLOT SCALE = 50.0000 ' / in.	CHECKED - DAD	REVISED -						TS-05	CONTRACT NO. 61E05	
	PLOT DATE = 1/13/2014	DATE - 10-28-09	REVISED -		SCALE: NONE	SHEET NO. 2 OF 7 SHEETS	STA. TO STA.	FED. ROAD DIST. NO. 1	ILLINOIS	FED. AID PROJECT	

TRAFFIC SIGNAL MAST ARM AND SIGNAL POST

MAST ARM MOUNTED SIGNALS IN EXISTING, PROPOSED OR FUTURE SIDEWALK/BICYCLE PATH AREA. INTERSECTION SHOWN WITH PEDESTRIAN SIGNALS AND PEDESTRIAN PUSHBUTTON DETECTORS.

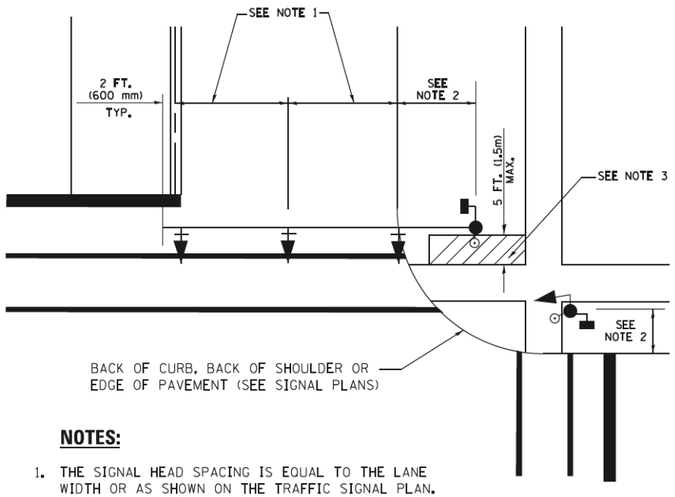

NOTES:

1. THE SIGNAL HEAD SPACING IS EQUAL TO THE LANE WIDTH OR AS SHOWN ON THE TRAFFIC SIGNAL PLAN.
2. REFER TO THE TRAFFIC SIGNAL EQUIPMENT OFFSET TABLE.
3. PROVIDE A LEVEL ALL-WEATHER SURFACE (CONCRETE SIDEWALK, ASPHALT BICYCLE PATH SURFACE OR MATCHING MATERIAL TO THE ADJACENT SURFACE) UP TO THE MAST ARM SHAFT OR THE SIGNAL POST.
4. THE FACE OF THE PEDESTRIAN PUSHBUTTON SHALL BE PARALLEL TO THE CROSSWALK TO BE USED.
5. THE LOCATIONS AND INSTALLATION OF PEDESTRIAN SIGNAL HEADS AND PEDESTRIAN PUSHBUTTONS SHALL MEET THE REQUIREMENTS OF THE MUTCD AND INFORMATION FOUND IN THE "AMERICANS WITH DISABILITIES ACT ACCESSIBILITY GUIDELINES FOR BUILDINGS AND FACILITIES."

PEDESTRIAN SIGNAL POST AND PEDESTRIAN PUSH BUTTON POST

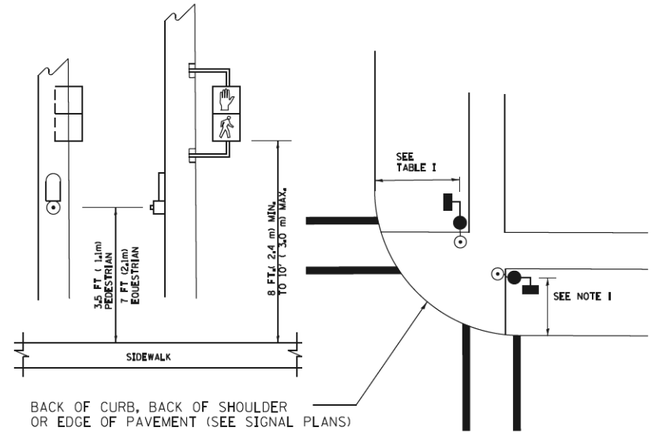

NOTES:

1. REFER TO THE TRAFFIC SIGNAL EQUIPMENT OFFSET TABLE.
2. PROVIDE A LEVEL ALL-WEATHER SURFACE (CONCRETE SIDEWALK, ASPHALT BICYCLE PATH SURFACE OR MATCHING MATERIAL TO THE ADJACENT SURFACE) UP TO THE PEDESTRIAN SIGNAL POST OR THE PEDESTRIAN PUSH BUTTON POST.
3. THE FACE OF THE PEDESTRIAN PUSHBUTTON SHALL BE PARALLEL TO THE CROSSWALK TO BE USED.
4. THE LOCATIONS AND INSTALLATION OF PEDESTRIAN SIGNAL HEADS AND PEDESTRIAN PUSHBUTTONS SHALL MEET THE REQUIREMENTS OF THE MUTCD AND INFORMATION FOUND IN THE "AMERICANS WITH DISABILITIES ACT ACCESSIBILITY GUIDELINES FOR BUILDINGS AND FACILITIES."

RECOMMENDED PUSHBUTTON LOCATIONS

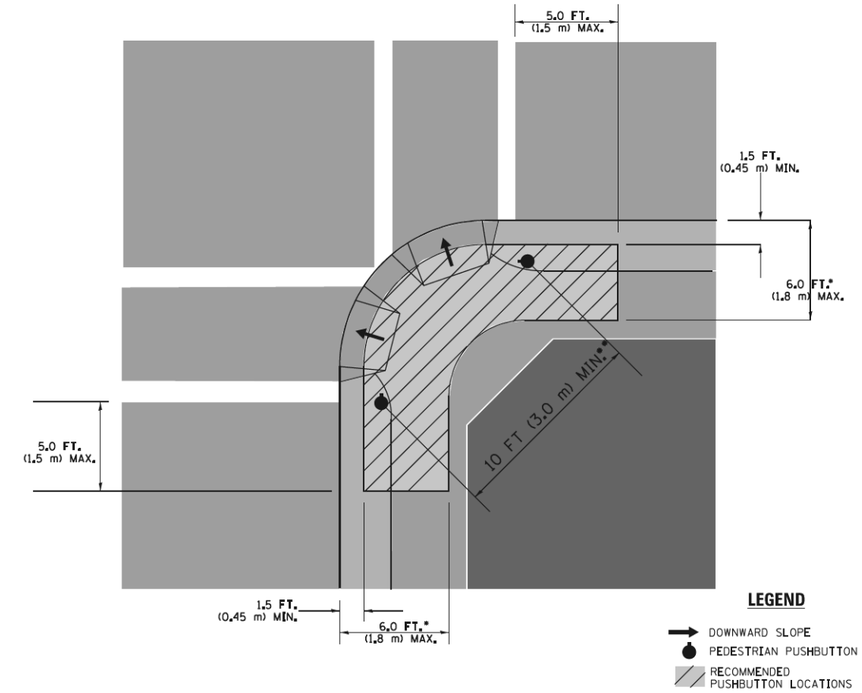

* WHERE THERE ARE CONSTRAINTS THAT MAKE IT IMPRACTICAL TO PLACE THE PEDESTRIAN PUSHBUTTON BETWEEN 1.5 FT (0.45 m) AND 6 FT (1.8 m) FROM THE EDGE OF THE CURB, SHOULDER, OR PAVEMENT, IT SHOULD NOT BE FURTHER THAN 10 FT (3 m) FROM THE EDGE OF CURB, SHOULDER, OR PAVEMENT.

** WHERE THERE ARE CONSTRAINTS ON A PARTICULAR CORNER THAT MAKE IT IMPRACTICAL TO PROVIDE THE 10 FT (3 m) SEPERATION BETWEEN THE TWO PEDESTRIAN PUSHBUTTONS, THE PUSHBUTTONS MAY BE PLACED CLOSER TOGETHER OR ON THE SAME POLE.

NOTES:

1. PEDESTRIAN SIGNAL HEADS SHALL BE MOUNTED WITH THE BOTTOM OF THE SIGNAL HOUSING INCLUDING BRACKETS NOT LESS THAN 8 FT (2.4 m) OR MORE THAN 10 FT (3 m) ABOVE SIDEWALK LEVEL, AND SHALL BE POSITIONED AND ADJUSTED TO PROVIDE MAXIMUM VISIBILITY AT THE BEGINNING OF THE CONTROLLED CROSSWALK.
2. THE BOTTOM OF THE SIGNAL HOUSING (INCLUDING BRACKETS) OF A VEHICULAR SIGNAL FACE THAT IS NOT LOCATED OVER A HIGHWAY SHALL BE AT LEAST 8 FT (2.4 m) BUT NOT MORE THAN 19 FT (5.8 m) ABOVE THE SIDEWALK OR, IF THERE IS NO SIDEWALK, ABOVE THE PAVEMENT GRADE AT THE CENTER OF THE ROADWAY.
3. THE BOTTOM OF THE SIGNAL HOUSING AND ANY RELATED ATTACHMENTS TO A SIGNAL FACE LOCATED OVER ANY PORTION OF A HIGHWAY SHALL BE ACCORDING TO CURRENT STATE STANDARDS 877001, 877002, 877006, 877011 AND 877012 WITH A MINIMUM OF 16 FT (5.0 m) AND A MAXIMUM OF 18 FT. (5.5 m) FROM THE HIGHEST POINT OF PAVEMENT.
4. THE BOTTOM OF THE TEMPORARY SPAN WIRE MOUNTED SIGNAL HOUSING AND ANY RELATED ATTACHMENTS TO A SIGNAL FACE LOCATED OVER ANY PORTION OF A HIGHWAY SHALL BE ACCORDING TO CURRENT STATE STANDARD 880001 WITH A MINIMUM OF 17 FT (5.18 m) FROM THE HIGHEST POINT OF PAVEMENT.
5. THE TOP OF THE SIGNAL HOUSING OF A SIGNAL FACE LOCATED OVER ANY PORTION OF A HIGHWAY SHALL NOT BE MORE THAN 25.6 FT (7.8 m) ABOVE THE PAVEMENT.

TRAFFIC SIGNAL EQUIPMENT OFFSET

TRAFFIC SIGNAL EQUIPMENT	COMBINATION CONCRETE CURB AND GUTTER (MINIMUM DISTANCE FROM BACK OF CURB TO CENTERLINE OF FOUNDATION)	SHOULDER/NON-CURBED AREA (MINIMUM DISTANCE FROM EDGE OF PAVEMENT TO CENTERLINE OF FOUNDATION)
TRAFFIC SIGNAL MAST ARM POLE	6 FT (1.8m)	SHOULDER WIDTH + 2 FT (0.6m), MINIMUM 10 FT (3.0m)
TRAFFIC SIGNAL POST	4 FT (1.2m)	SHOULDER WIDTH + 2 FT (0.6m), MINIMUM 10 FT (3.0m)
PEDESTRIAN SIGNAL POST	4 FT (1.2m)	SHOULDER WIDTH + 2 FT (0.6m), MINIMUM 10 FT (3.0m)
PEDESTRIAN PUSHBUTTON POST	4 FT (1.2m)	SHOULDER WIDTH + 2 FT (0.6m), MINIMUM 10 FT (3.0m)
TEMPORARY WOOD POLE	6 FT (1.8m)	SHOULDER WIDTH + 2 FT (0.6m), MINIMUM 10 FT (3.0m)
CONTROLLER CABINET	6 FT (1.8m) MINIMUM DISTANCE SEE NOTE 2	SHOULDER WIDTH + 6 FT (1.8m), MINIMUM 16 FT (4.9m) SEE NOTE 3.
SERVICE INSTALLATION, GROUND MOUNT	6 FT (1.8m) MINIMUM DISTANCE SEE NOTE 2	SHOULDER WIDTH + 6 FT (1.8m), MINIMUM 16 FT (4.9m) SEE NOTE 3.

NOTES:

1. CONTACT THE "AREA TRAFFIC SIGNAL MAINTENANCE AND OPERATIONS ENGINEER" FOR ASSISTANCE IN LOCATING THE TRAFFIC SIGNAL EQUIPMENT WHEN THERE ARE CONFLICTS WITH DITCHES OR THE MINIMUM OFFSET DISTANCES CANNOT BE MET.
2. MINIMUM DISTANCE FROM THE BACK OF CURB TO THE ROADWAY SIDE OF THE FOUNDATION.
3. MINIMUM DISTANCE FROM THE EDGE OF PAVEMENT TOTHE ROADWAY SIDE OF THE FOUNDATION.
4. ANY CHANGES TO THE OFFSETS OF THE FOUNDATIONS, FROM THE MINIMUM DISTANCES LISTED IN THE "TRAFFIC SIGNAL EQUIPMENT OFFSET" CHART AND THE TRAFFIC SIGNAL INSTALLATION PLAN, COULD EFFECT THE PLACEMENT OF THE SIGNAL HEADS, PEDESTRIAN SIGNAL HEADS AND THE PEDESTRIAN PUSHBUTTONS. THE SIGNAL HEAD PLACEMENT ON THE MAST ARMS SHALL REMAIN AS PER THE TRAFFIC SIGNAL INSTALLATION PLAN AND THE "TRAFFIC SIGNAL MAST ARM AND SIGNAL POST" DETAIL ABOVE. THE PROPOSED MAST ARM LENGTHS MAY NEED TO BE REVISED TO MEET THE ABOVE REQUIREMENTS. THE PEDESTRIAN SIGNAL HEADS AND PEDESTRIAN PUSHBUTTONS MUST MEET THE REQUIREMENTS UNDER THE DETAILS ON THIS SHEET.

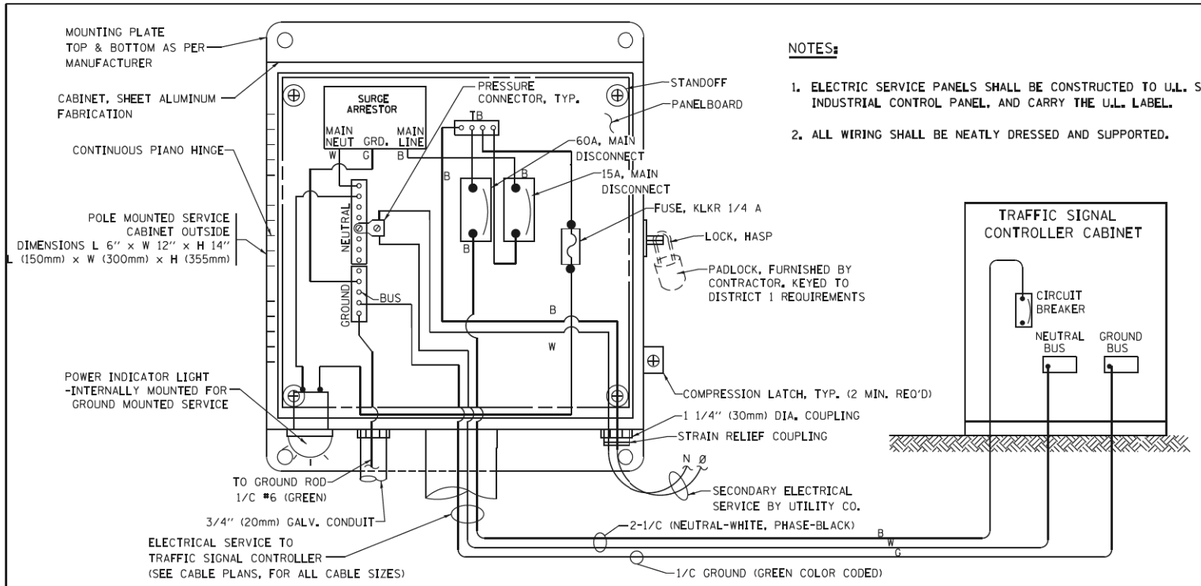

NOTES:

1. ELECTRIC SERVICE PANELS SHALL BE CONSTRUCTED TO U.L. STD 508, INDUSTRIAL CONTROL PANEL, AND CARRY THE U.L. LABEL.
2. ALL WIRING SHALL BE NEATLY DRESSED AND SUPPORTED.

ELECTRICAL SERVICE – PANEL DIAGRAM (TYPICAL FOR POLE AND GROUND MOUNTED SERVICE)
SERVICE INSTALLATION POLE MOUNT (SHOWN)
(NOT TO SCALE)

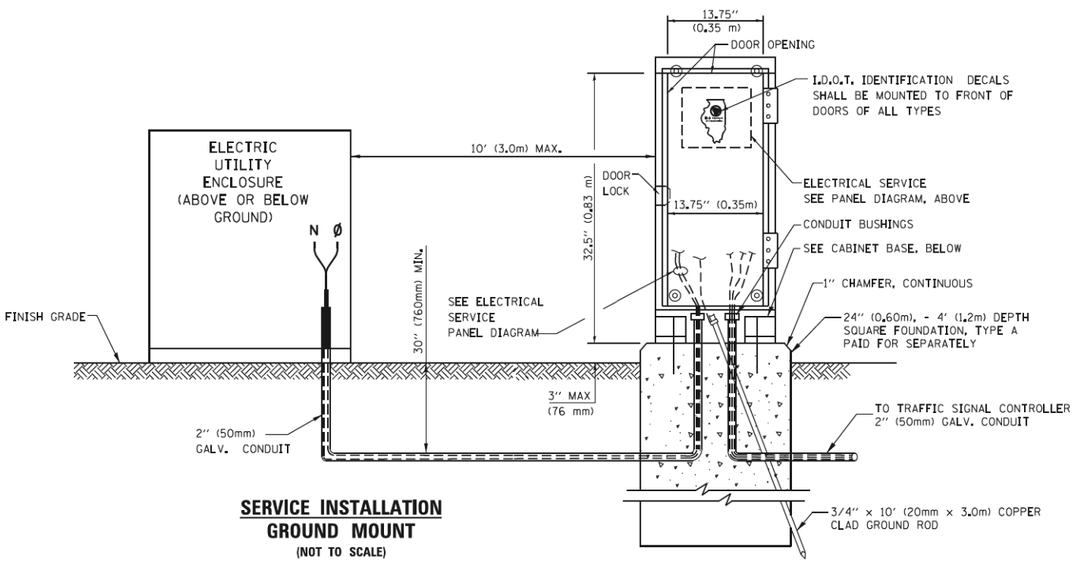

SERVICE INSTALLATION
GROUND MOUNT
(NOT TO SCALE)

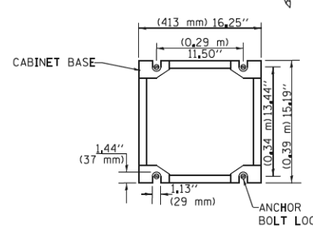

CABINET – BASE BOLT PATTERN
(NOT TO SCALE)

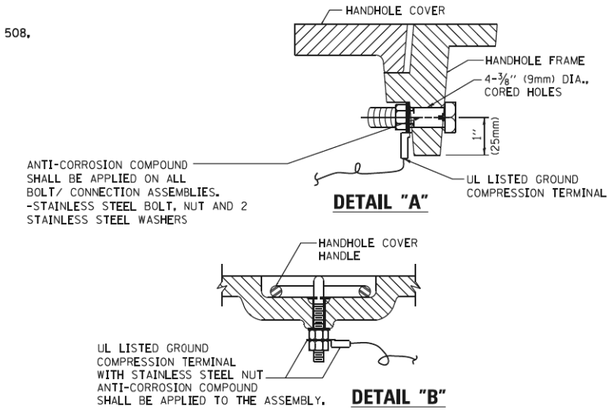

NOTES:
GROUNDING SYSTEM

1. THE GROUNDING SYSTEM SHALL CONSIST OF AN INSULATED CONDUCTOR TYPE XLP, NO. 6 A.W.G., STRANDED COPPER TO BE INSTALLED IN RACEWAYS. THE GROUNDING CABLE SHALL BE INSTALLED IN A CONTINUOUS MANNER AS SHOWN ON THE CABLE PLAN PROVIDED. ALL GROUNDING CONDUCTORS SHALL BE BONDED TO METAL ENCLOSURE (HANDHOLE, POST, MAST ARM, CONTROLLER, ETC.). GROUND ROD SHALL BE 3/4" DIA. x 10'-0" (20mm x 3.0m) LONG, COPPER CLAD. ONE GROUND ROD SHALL BE INSTALLED AT ALL POST FOUNDATIONS, POLE FOUNDATIONS, CONTROLLER CABINET FOUNDATION AND ELECTRICAL SERVICE INSTALLATION AS INDICATED ON THE CABLE PLAN. IF THERE ARE ANY SPECIAL CONDITIONS SUCH AS SUB-SURFACE CONDITIONS OR INSTALLATION PROBLEMS, THE RESIDENT ENGINEER SHALL BE NOTIFIED OR CONTACT THE BUREAU OF TRAFFIC, ILLINOIS DEPARTMENT OF TRANSPORTATION DISTRICT ONE AT (847) 705-4139.
2. THE NEUTRAL CONDUCTOR AND THE GROUND CONDUCTOR SHALL BE CONNECTED IN THE SERVICE INSTALLATION. AT NO OTHER POINT IN THE TRAFFIC SIGNAL SYSTEM SHALL THE NEUTRAL AND GROUND CONDUCTORS BE CONNECTED.
3. ALL EQUIPMENT GROUNDING CONDUCTORS SHALL TERMINATE AT THE GROUND BUS IN THE CONTROLLER CABINET.
4. THE CONTRACTOR SHALL PROVIDE A GROUND CABLE WITH CONNECTORS BETWEEN THE HANDHOLE COVER AND HANDHOLE FRAME.

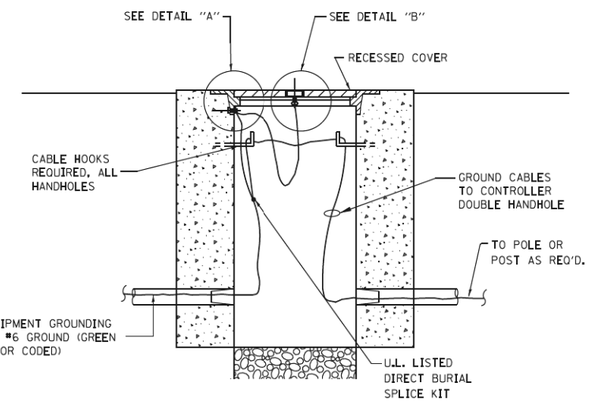

HANDHOLE COVER & FRAME – GROUNDING DETAIL
(NOT TO SCALE)

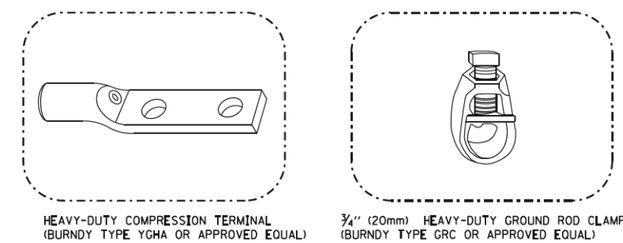

NOTES:

- ALL CLAMPS SHALL BE BRONZE OR COPPER, UL APPROVED.
- GROUND CABLE SHALL BE LOOPED OVER HOOKS IN THE HANDHOLES
  6.5' (2.0m) SLACK SHALL BE PROVIDED IN SINGLE HANDHOLES
  13' (4.0m) OF SLACK SHALL BE PROVIDED IN DOUBLE HANDHOLES.
  5' (1.4m) OF SLACK SHALL BE PROVIDED BETWEEN FRAME AND COVER.

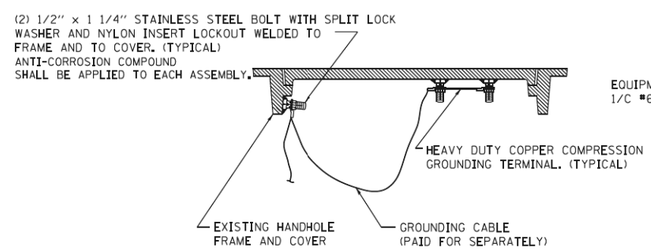

EXISTING HANDHOLE COVER & FRAME – GROUNDING DETAIL
(NOT TO SCALE)

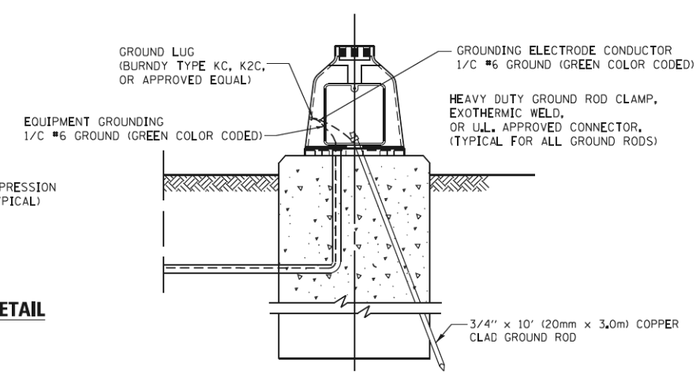

MAST ARM POLE / POST–GROUNDING DETAIL
(NOT TO SCALE)

FILE NAME = c:\pw_work\pwidot\footemj\d0108315\ts05.dgn	USER NAME = footemj	DESIGNED - DAD	REVISED - DAG 1-1-14	STATE OF ILLINOIS DEPARTMENT OF TRANSPORTATION	DISTRICT ONE STANDARD TRAFFIC SIGNAL DESIGN DETAILS	F.A.P. RTE.	SECTION	COUNTY	TOTAL SHEETS	SHEET NO.
		DRAWN - BCK	REVISED -			2298	16-00215-11-PV	KANE	611	335
	PLOT SCALE = 50.0000 ' / in.	CHECKED - DAD	REVISED -			TS-05		CONTRACT NO. 61E05		
	PLOT DATE = 1/13/2014	DATE - 10-28-09	REVISED -		SCALE: NONE / SHEET NO. 4 OF 7 SHEETS / STA. TO STA.	FED. ROAD DIST. NO. 1	ILLINOIS	FED. AID PROJECT		

ts05.dgn 1/13/2014 12:37:53 PM [3]footemj

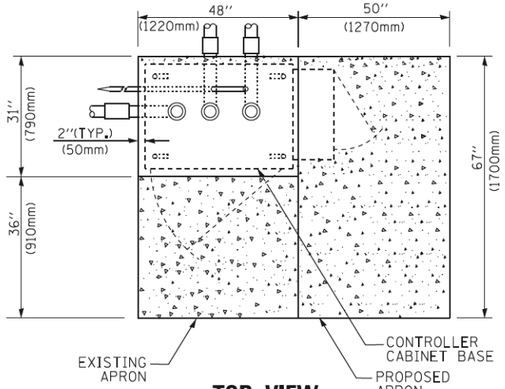

TOP VIEW

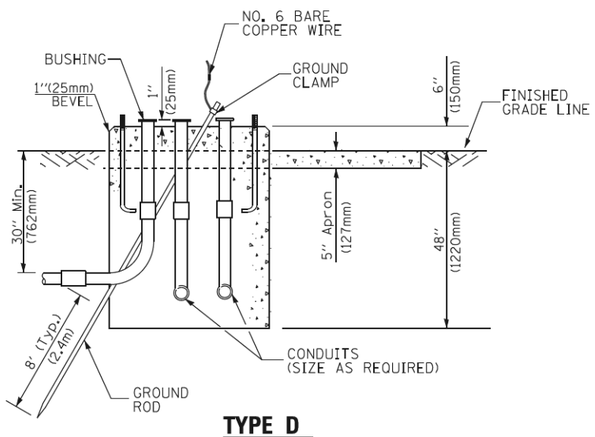

TYPE D
FOR GROUND MOUNTED CONTROLLER CABINET AND UPS BATTERY CABINET

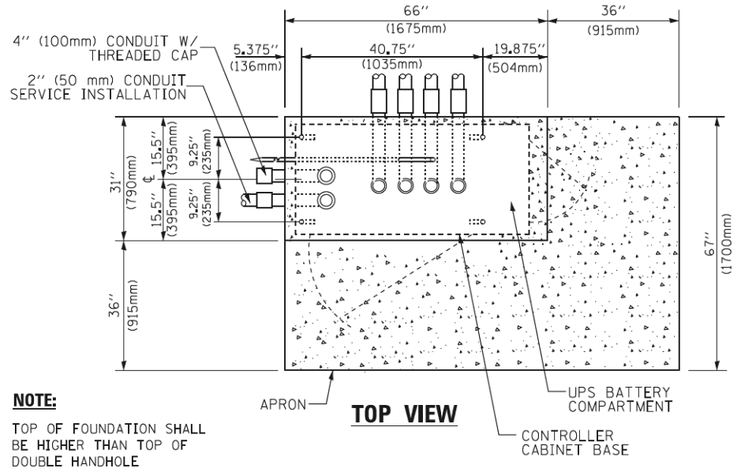

NOTE:

TOP OF FOUNDATION SHALL BE HIGHER THAN TOP OF DOUBLE HANDHOLE

TOP VIEW

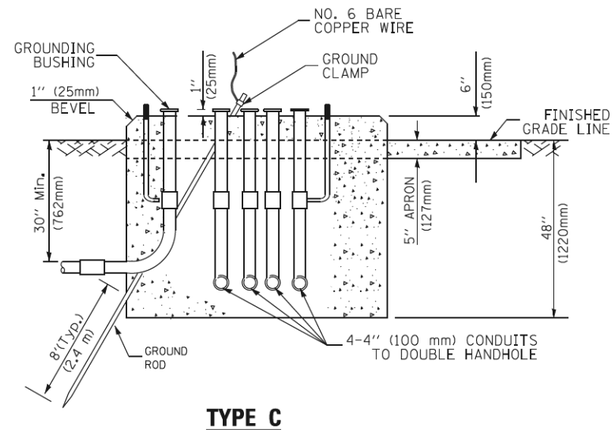

TYPE C
FOR GROUND MOUNTED SUPER P (TYPE IV) AND SUPER R (TYPE V) CONTROLLER CABINETS

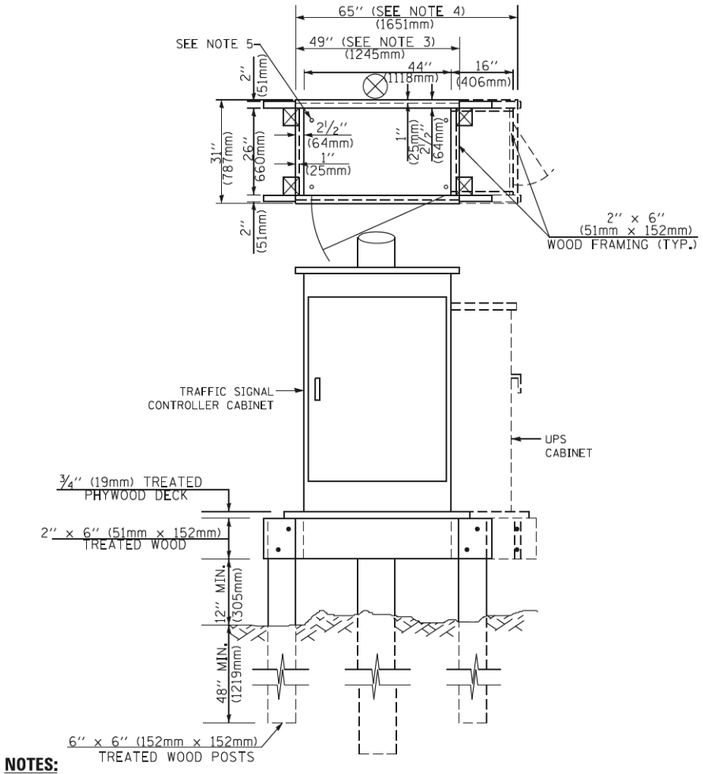

NOTES:

1. BASED ON CONTROLLER CABINET TYPE IV WITH BASE DIMENSIONS OF 26" x 44" (660mm x 1118mm). ADJUST PLATFORM SIZE TO FIT CABINET BASE DIMENSIONS BEING SUPPLIED
2. BASED ON UNINTERRUPTIBLE POWER SUPPLY CABINET WITH BASE DIMENSIONS OF 16" x 25" (406mm x 635mm). ADJUST PLATFORM SIZE TO FIT CABINET BASE DIMENSIONS BEING SUPPLIED.
3. PLATFORM SIZE FOR CONTROLLER CABINET TYPE IV.
4. PLATFORM SIZE FOR CONTROLLER CABINET TYPE IV AND UNINTERRUPTIBLE POWER SUPPLY CABINET.
5. DRILLED HOLES THROUGH THE PLATFORM BASE TO MATCH THE CONTROLLER CABINET BOLT TEMPLATE. FASTEN THE CONTROLLER CABINET TO THE PLATFORM WITH CARRIAGE BOLTS, WASHERS AND NUTS.
6. FASTEN ALL SUPPORT WOOD FRAMING TO THE WOOD POSTS WITH 2 LAG SCREWS FOR EACH CONNECTION..

TEMPORARY SIGNAL CONTROLLER WOOD SUPPORT PLATFORM

CABLE SLACK LENGTH	FEET	METER
HANDHOLE	6.5	2.0
DOUBLE HANDHOLE	13.0	4.0
SIGNAL POST	2.0	0.6
MAST ARM	2.0	0.6
CONTROLLER CABINET	1.5	0.5
FIBER OPTIC AT CABINET	13.0	4.0
ELECTRIC SERVICE AT (CABINET OR SERVICE LOCATION)	1.5	0.5
GROUND CABLE (SIGNAL POST, MAST ARM, CABINET)	1.5	0.5
GROUND CABLE (BETWEEN FRAME AND COVER)	5.0	1.6

CABLE SLACK

VERTICAL CABLE LENGTH	FEET	METER
MAST ARM POLE (MAST ARM MOUNTED SIGNAL HEAD) (L = MAST ARM LENGTH - DISTANCE TO SIGNAL HEAD FROM END OF ARM)	20.0+L	6.0+L
BRACKET MOUNTED (MAST ARM POLE OR SIGNAL POLE)	13.0	4.0
PEDESTRIAN PUSH BUTTON	6.0	2.0
SERVICE INSTALLATION POLE MOUNT TO SERVICE DROP	13.5	4.1
SERVICE INSTALLATION POLE MOUNT TO GROUND	13.5	4.1
SERVICE INSTALLATION GROUND MOUNT	6.0	2.0
FOUNDATION (SIGNAL POST, MAST ARM POLE, CONTROLLER CABINET, SERVICE-GROUND MOUNT)	3.0	1.0

VERTICAL CABLE LENGTH

FOUNDATION	DEPTH
TYPE A - Signal Post	4'-0" (1.2m)
TYPE C - CONTROLLER W/ UPS	4'-0" (1.2m)
TYPE D - CONTROLLER	4'-0" (1.2m)
SERVICE INSTALLATION, GROUND MOUNT, TYPE A - SQUARE	4'-0" (1.2m)

DEPTH OF FOUNDATION

Mast Arm Length	① Foundation Depth	Foundation Diameter	Spiral Diameter	Quantity of Rebars	Size of Rebars
Less than 30' (9.1 m)	10'-0" (3.0 m)	30" (750mm)	24" (600mm)	8	6(19)
Greater than or equal to 30' (9.1 m) and less than 40' (12.2 m)	13'-6" (4.1 m)	30" (750mm)	24" (600mm)	8	6(19)
	11'-0" (3.4 m)	36" (900mm)	30" (750mm)	12	7(22)
Greater than or equal to 40' (12.2 m) and less than 50' (15.2 m)	13'-0" (4.0 m)	36" (900mm)	30" (750mm)	12	7(22)
Greater than or equal to 50' (15.2 m) and up to 55' (16.8 m)	15'-0" (4.6 m)	36" (900mm)	30" (750mm)	12	7(22)
Greater than or equal to 56' (16.8 m) and less than 65' (19.8 m)	21'-0" (6.4 m)	42" (1060mm)	36" (900mm)	16	8(25)
Greater than or equal to 65' (19.8 m) and up to 75' (22.9 m)	25'-0" (7.6 m)	42" (1060mm)	36" (900mm)	16	8(25)

NOTES:

1. These foundation depths are for sites which have cohesive soils (clayey silt, sandy clay, etc.) along the length of the shaft, with an average Unconfined Compressive Strength (Qu) > 1.0 tsf (100 kpa). This strength shall be verified by boring data prior to construction or with testing by the Engineer during foundation drilling. The Bureau of Bridges & structures should be contacted for a revised design if other conditions are encountered.
2. Combination mast arm assemblies under 55 feet (16.8 m) shall use 36" (900 mm) diameter foundations.
3. Combination mast arm assemblies under 56 feet (16.8 m) through 75 feet (22.9 m) shall use 42" (1060 mm) diameter foundations
4. For mast arm assemblies with dual arms refer to state standard 878001..

DEPTH OF MAST ARM FOUNDATIONS, TYPE E

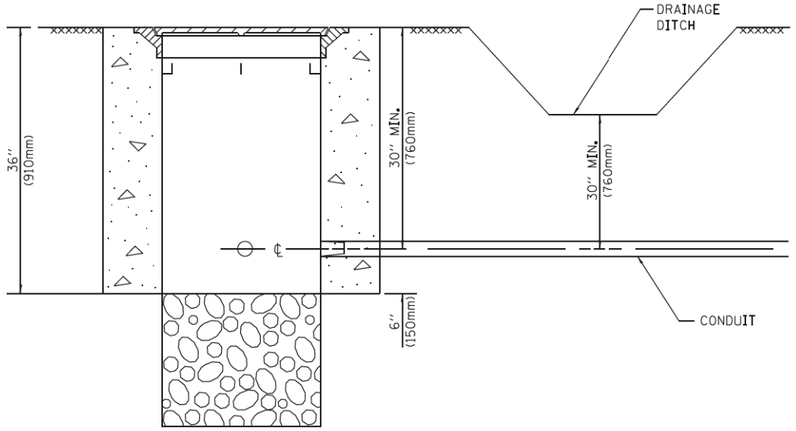

NOTES:

1. CONDUIT DEPTH SHALL BE A MINIMUM OF 30" (760mm) BELOW THE BOTTOM OF THE DRAINAGE DITCH OR ANY SLOPING GROUND
2. THE MINIMUM CONDUIT DEPTH APPLIES TO ALL CONDUIT PLACED UNDER ROADWAY PAVEMENT, MULTI-USE PATHS, SIDEWALKS AND SOIL SURFACES.
3. THE MINIMUM CONDUIT DEPTH APPLIES TO ALL HANDHOLES, HEAVY DUTY HANDHOLES AND DOUBLE HANDHOLES.

HANDHOLE WITH MINIMUM CONDUIT DEPTH

(NOT TO SCALE)

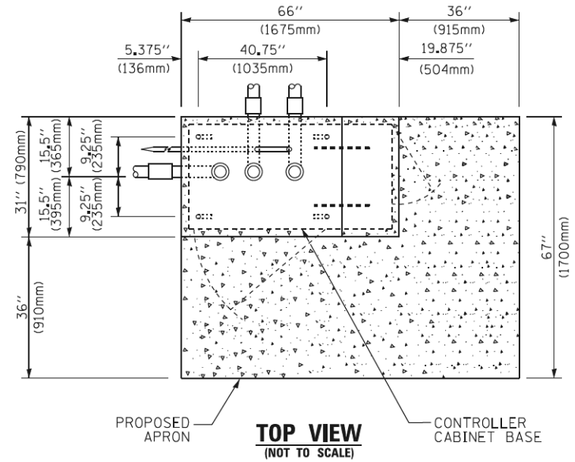

TOP VIEW

(NOT TO SCALE)

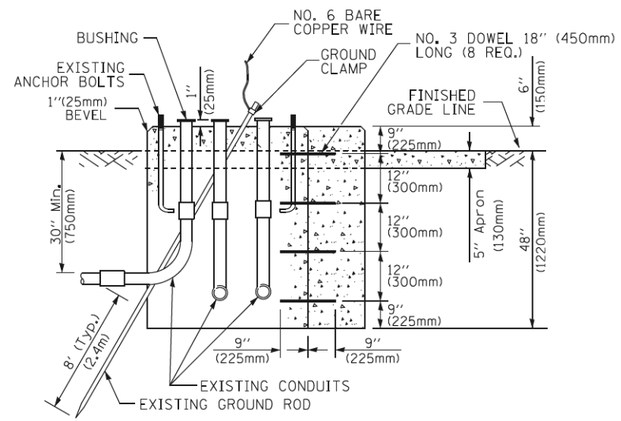

MODIFY EXISTING TYPE "D" FOUNDATION TO TYPE "C" FOUNDATION

(NOT TO SCALE)

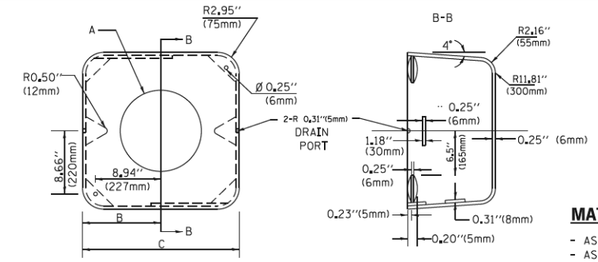

MATERIAL:

- ASTM A36 STEEL
- ASTM A-123 HOT DIPPED GALVANIZED

A	B	C	HEIGHT	WEIGHT
VARIES	9.5"(241mm)	19"(483mm)	7" (178mm) - 12" (300mm)	53 lbs (24kg)
VARIES	10.75"(273mm)	21.5"(546mm)	7" (178mm) - 12" (300mm)	68 lbs (31 kg)
VARIES	13.0"(330mm)	26"(660mm)	7" (178mm) - 12" (300mm)	81 lbs (37 kg)
VARIES	18.5"(470mm)	37"(940mm)	7" (178mm) - 12" (300mm)	126 lbs (57 kg)

SHROUD

NOTES:

1. DIMENSION "A" IS EQUAL TO THE DIAMETER OF THE MAST ARM POLE AT THE TOP OF THE SHROUD. THE SHROUD SHALL BE TIGHT TO THE MAST ARM POLE.
2. THE SUPPLIER SHALL VERIFIED THE ABOVE DIMENSIONS BASED ON MAST ARM REQUIREMENTS.
3. THE HEIGHT OF THE SHROUD SHALL COVER THE ANCHOR BOLTS, NUTS AND MAST ARM POLE BASE.

NOTE:

SUPPORT EXISTING CABINET AND CONTROL EQUIPMENT ABOVE FOUNDATION TO KEEP TRAFFIC SIGNAL FUNCTIONING WHILE FOUNDATION MODIFICATION WORK IS PROCEEDING.

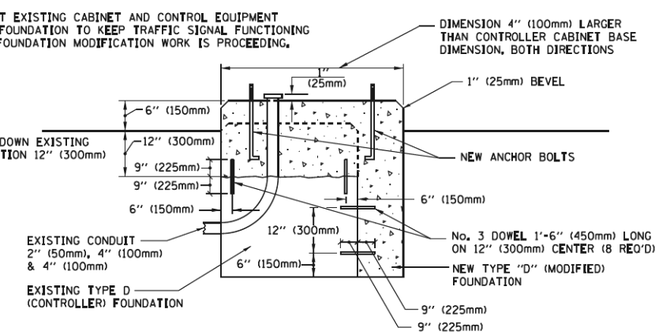

MODIFY EXISTING TYPE "D" FOUNDATION

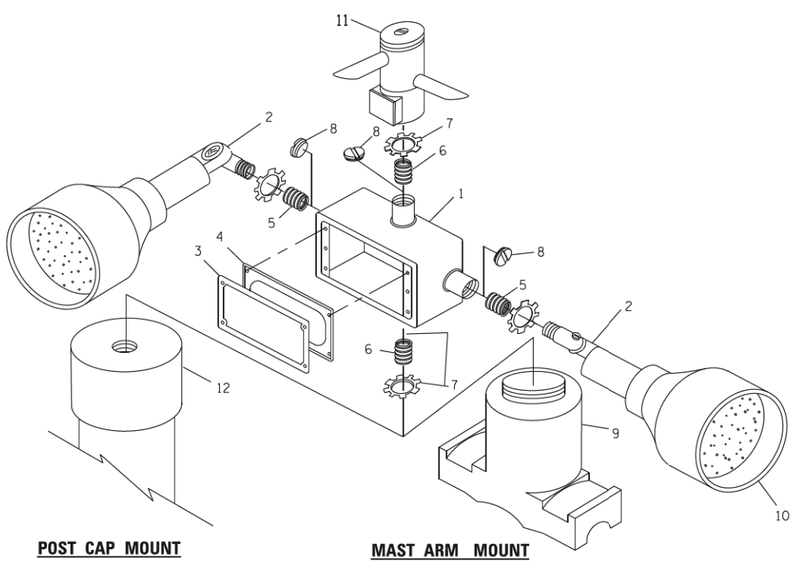

POST CAP MOUNT **MAST ARM MOUNT**

EMERGENCY VEHICLE DETECTOR WITH CONFIRMATION BEACON MOUNTING DETAIL

ITEM NO.	IDENTIFICATION
1	OUTLET BOX- GALV. 21 CU.IN. (0.000344 CU-M)
2	LAMP HOLDER AND COVER
3	OUTLET BOX COVER
4	RUBBER COVER GASKET
5	REDUCING BUSHING
6	3/4"(19 mm) CLOSE NIPPLE
7	3/4"(19 mm) LOCKNUT
8	3/4"(19 mm) HOLE PLUG
9	SADDLE BRACKET - GALV.
10	6 WATT PAR 38 LED FLOOD LAMP
11	DETECTOR UNIT
12	POST CAP [18 FT. (5.4 m) POST MIN.]

NOTES:

1. ALL ELECTRICAL ITEMS, EXCEPT ITEMS #2 AND #11 SHALL BE ALUMINUM OR GALVANIZED
2. ITEM #1- OZ/GEDNEY FSX-1-50 OR EQUIVALENT
   ITEM #2- MULBERRY CON-O-SHADE LAMP SHIELD OR EQUIVALENT
   ITEM #9- "BAND-IT" SADDLE BRACKET OR EQUIVALENT
3. WHEN POST MOUNTING IS SPECIFIED, ITEM #9 SHALL NOT BE REQUIRED. THE DETECTION UNIT SHALL BE MOUNTED DIRECTLY ON TOP OF THE CAP BY DRILLING AND TAPPING A 3/4 "(19 mm) HOLE WITH PIPE THREADS. THE POST CAP SHALL EITHER BE SCREWED TO THE TOP OF THE POST OR A MINIMUM OF 3 TIGHTENING SCREWS SHALL BE REQUIRED ON EACH CAP.

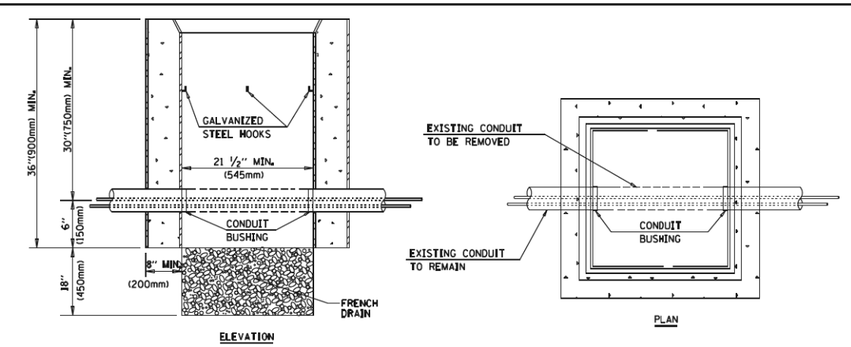

NOTES:

1. HANDHOLE CONSTRUCTED PER STATE STANDARD 814001.
2. REMOVAL OF THE EXISTING CONDUIT FROM THE HANDHOLE AND THE INSTALLATION OF THE CONDUIT BUSHINGS SHALL BE INCLUDED WITH THE COST OF THE HANDHOLE.

HANDHOLE TO INTERCEPT EXISTING CONDUIT

FILE NAME = c:\pw_work\pwidot\footemj\d0108315\ts05.dgn	USER NAME = footemj	DESIGNED - DAD	REVISED - DAG 1-1-14
		DRAWN - BCK	REVISED -
	PLOT SCALE = 50.0000 ' / in.	CHECKED - DAD	REVISED -
	PLOT DATE = 1/13/2014	DATE - 10-28-09	REVISED -

STATE OF ILLINOIS
DEPARTMENT OF TRANSPORTATION

DISTRICT ONE
STANDARD TRAFFIC SIGNAL DESIGN DETAILS

SCALE: NONE | SHEET NO. 6 OF 7 SHEETS | STA. TO STA.

F.A.P. RTE.	SECTION	COUNTY	TOTAL SHEETS	SHEET NO.
2298	16-00215-11-PV	KANE	61	337
	TS-05	CONTRACT NO. 61E05		

FED. ROAD DIST. NO. 1 | ILLINOIS | FED. AID PROJECT

ts05.dgn 1/13/2014 1:20:10 PM USER=footemj

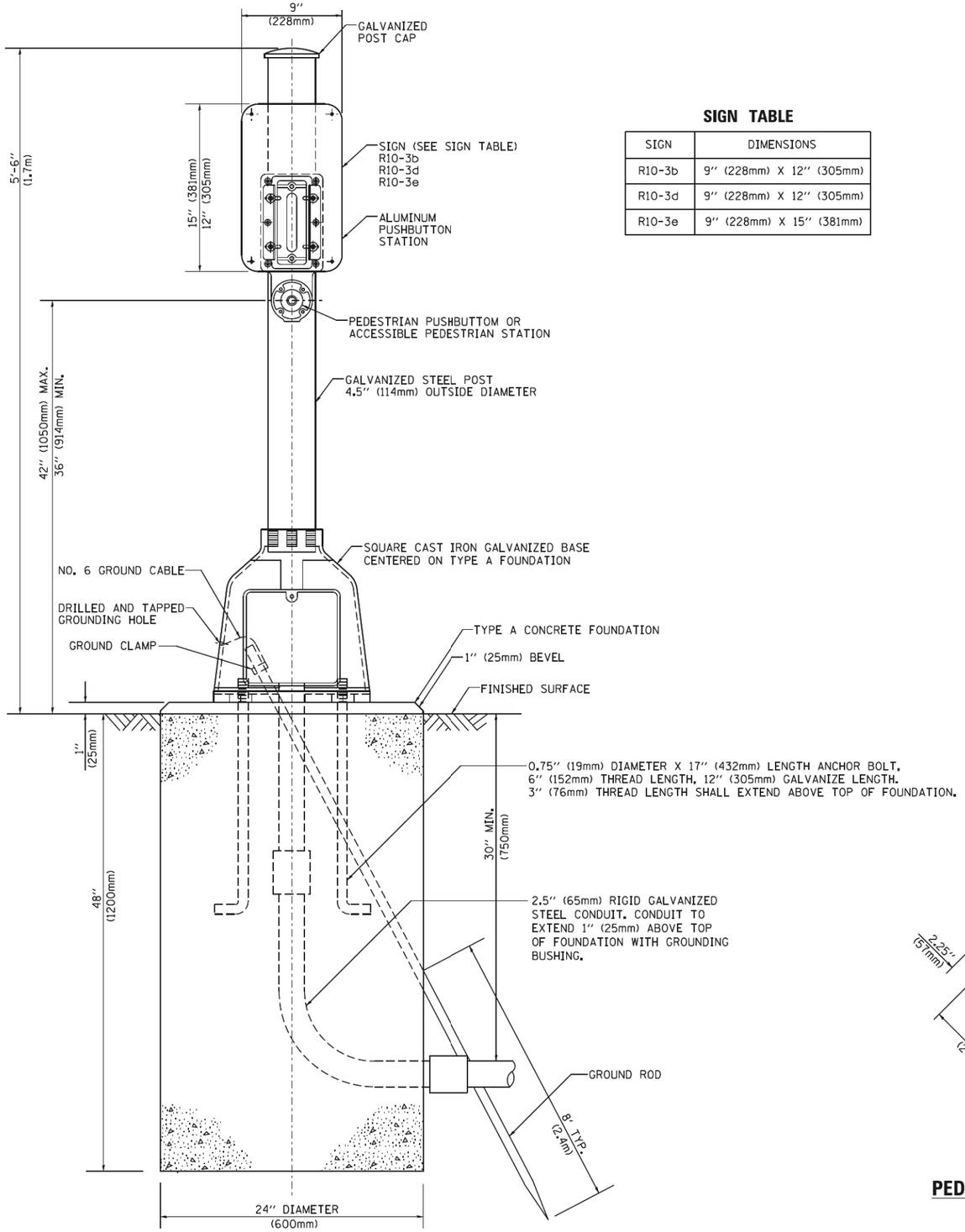

SIGN TABLE

SIGN	DIMENSIONS
R10-3b	9" (228mm) X 12" (305mm)
R10-3d	9" (228mm) X 12" (305mm)
R10-3e	9" (228mm) X 15" (381mm)

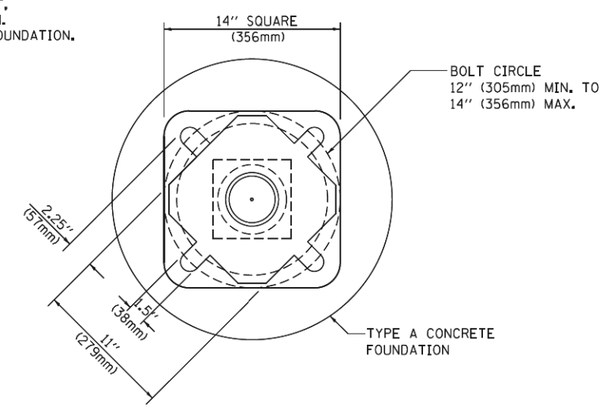

BOLT PATTERN

PEDESTRIAN PUSH BUTTON POST, TYPE A

FILE NAME = c:\pw_work\pwidot\footemj\d0108315\ts05.dgn	USER NAME = footemj	DESIGNED - DAG	REVISED - DAG 1-1-14
		DRAWN - GND	REVISED -
	PLOT SCALE = 50.0000 ' / in.	CHECKED - DAD	REVISED -
	PLOT DATE = 1/13/2014	DATE - 10/1/2012	REVISED -

STATE OF ILLINOIS
DEPARTMENT OF TRANSPORTATION

DISTRICT ONE
STANDARD TRAFFIC SIGNAL DESIGN DETAILS

SCALE: NONE | SHEET NO. 7 OF 7 SHEETS | STA. | TO STA.

F.A.P. RTE.	SECTION	COUNTY	TOTAL SHEETS	SHEET NO.
2298	16-00215-11-PV	KANE	611	338
	TS-05	CONTRACT NO. 61E05		

FED. ROAD DIST. NO. 1 | ILLINOIS | FED. AID PROJECT

ts05.dgn 1/13/2014 12:32:23 PM C:\users\footemj

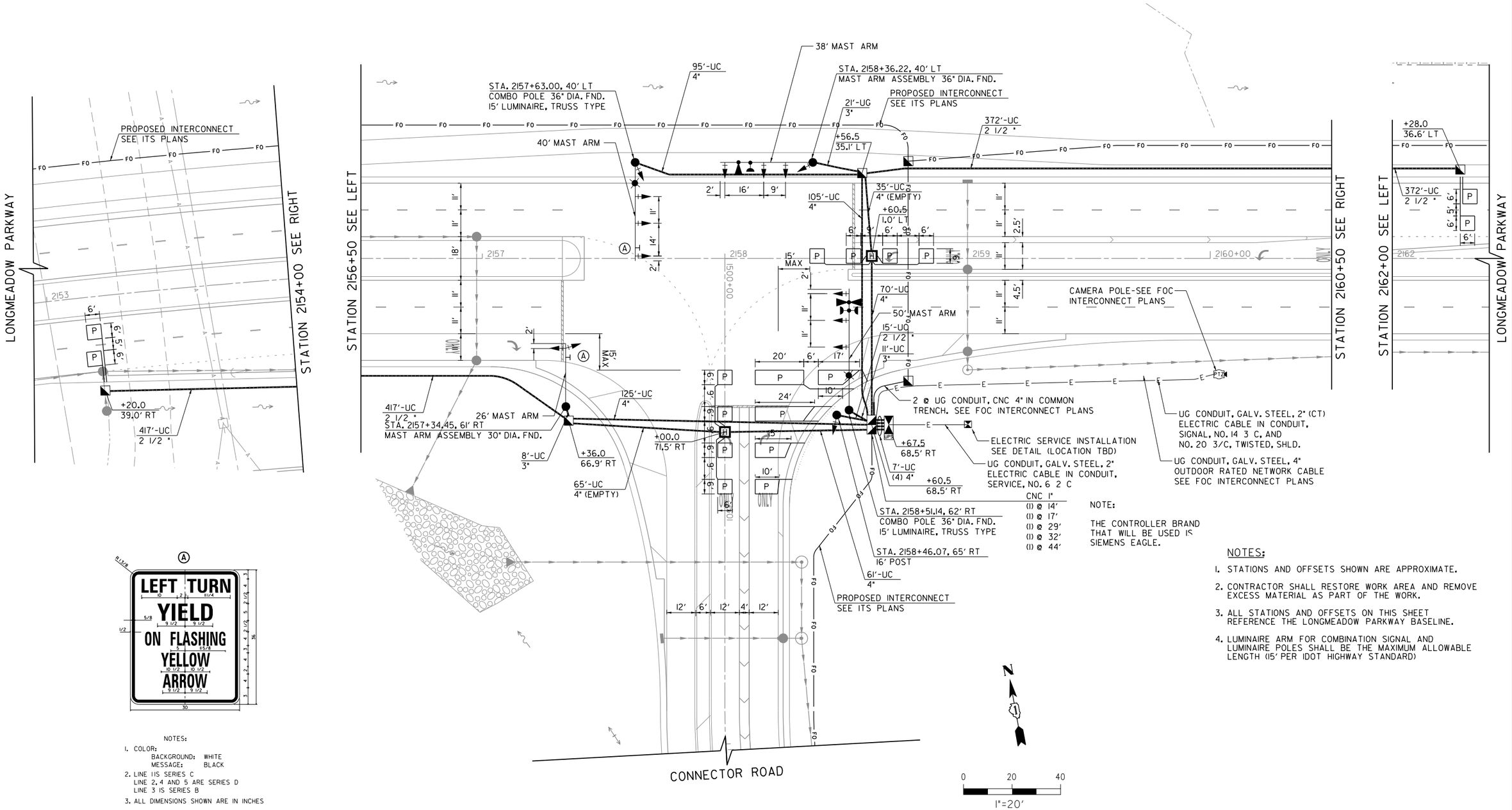

NOTES:

1. COLOR:
   BACKGROUND: WHITE
   MESSAGE: BLACK
2. LINE 1 IS SERIES C
   LINE 2, 4 AND 5 ARE SERIES D
   LINE 3 IS SERIES B
3. ALL DIMENSIONS SHOWN ARE IN INCHES

NOTES:

1. STATIONS AND OFFSETS SHOWN ARE APPROXIMATE.
2. CONTRACTOR SHALL RESTORE WORK AREA AND REMOVE EXCESS MATERIAL AS PART OF THE WORK.
3. ALL STATIONS AND OFFSETS ON THIS SHEET REFERENCE THE LONGMEADOW PARKWAY BASELINE.
4. LUMINAIRE ARM FOR COMBINATION SIGNAL AND LUMINAIRE POLES SHALL BE THE MAXIMUM ALLOWABLE LENGTH (15' PER IDOT HIGHWAY STANDARD)

FILE NAME = G:\CH13\0189\Road\Sheets - B2 Contract\2013894-SHT-Signals-Install-Long1.dgn

TranSystems	USER NAME = mbmcwhorter	DESIGNED - BSH	REVISED -
		DRAWN - MLB	REVISED -
	PLOT SCALE = 40.0000 ' / in.	CHECKED - MFD	REVISED -
	PLOT DATE = 9/25/2017	DATE - 8/7/2017	REVISED -

STATE OF ILLINOIS
DEPARTMENT OF TRANSPORTATION

TRAFFIC SIGNAL INSTALLATION PLAN
LONGMEADOW PARKWAY AT CONNECTOR ROAD

SCALE: 1"=20' | SHEET 339 OF 611 SHEETS

F.A.U. RTE.	SECTION	COUNTY	TOTAL SHEETS	SHEET NO.
2298	16-00215-11-PV	KANE	611	339
		CONTRACT NO. 61E05		

FED. ROAD DIST. NO. 1 | ILLINOIS | FED. AID PROJECT

CONTROLLER SEQUENCE

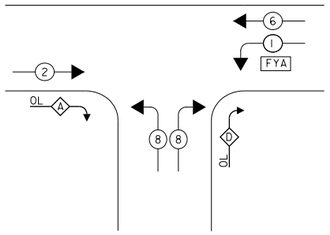

PHASE DESIGNATION DIAGRAM

LEGEND

- DUAL ENTRY PHASE
- SINGLE ENTRY PHASE
- PEDESTRIAN PHASE
- OVERLAP
- * NUMBER REFERS TO ASSOCIATED PHASE
- FYA FLASHING YELLOW ARROW

EMERGENCY VEHICLE PREEMPTION SEQUENCE

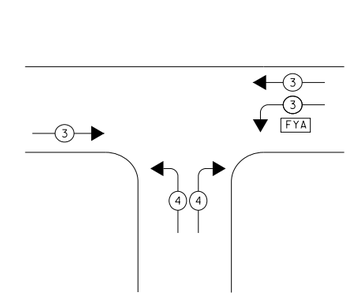

PROPOSED EMERGENCY VEHICLE PREEMPTORS			
EMERGENCY VEHICLE PREEMPTOR	3		4
MOVEMENT	→	FYA	

RIGHT TURN OVERLAP PHASE DESIGNATION

OVERLAP LETTER		PERMISSIVE PHASE		PROTECTED PHASE
D	=	8	+	1
A	=	2	+	8

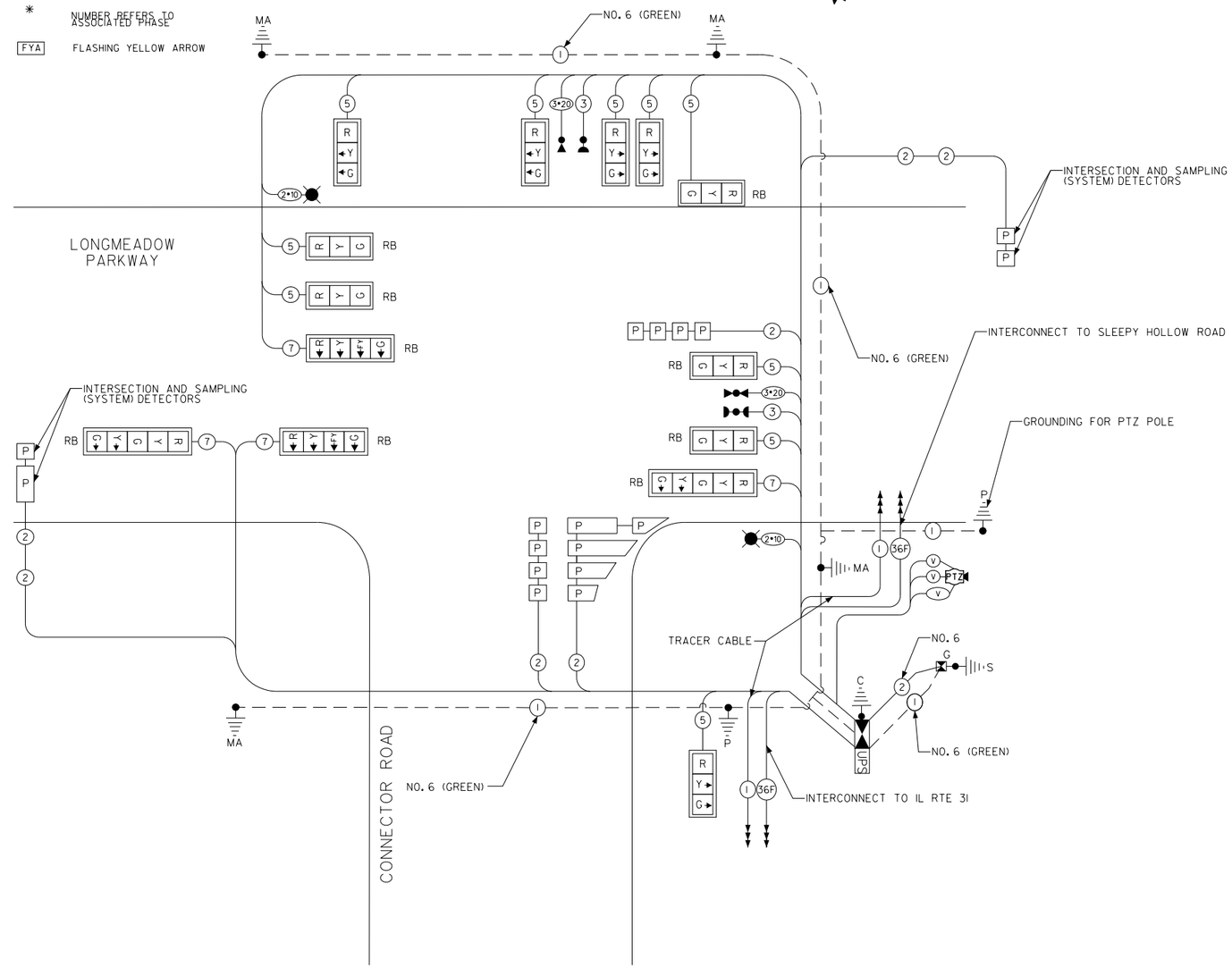

I.D.O.T / KANE COUNTY TRAFFIC SIGNAL INSTALLATION ELECTRICAL SERVICE REQUIREMENTS					
TYPE	NO. LAMPS	WATTAGE INCAND.	WATTAGE LED	PERCENT (%) OPERATION	TOTAL WATTAGE
SIGNAL (RED)	14		11	50	77
(YELLOW)	14		20	5	12
(GREEN)	14		12	45	65
ARROW (EXCEPT FOR FYA)	4		10	10	4
FLASHING YELLOW ARROW (FYA)	2		12	30	7
PEDESTRIAN SIGNAL	0		20	100	0
CONTROLLER	1		100	100	100
UPS	1		25	100	25
ILLUM. SIGN (BLANK OUT)	0		25	5	0
VIDEO DETECTION SYSTEM	0		150	100	0
ILLUM. STREET NAME SIGN	0		120	50	0
LUMINAIRE (COMBO POLE)	2		190	50	190
PTZ / SURVEILLANCE CAMERA	1		100	100	100
FLASHING BEACON (SIGNAL)	0			50	0
				TOTAL =	580

ENERGY COSTS TO: KDOT
41W011 BURLINGTON RD
ST. CHARLES, IL. 60175

ENERGY SUPPLY CONTACT: ELIZABETH MOESCH
PHONE: (630) 723-2128
COMPANY: COMED

NOTE:
RETROREFLECTIVE BACKPLATES "RB" SHALL CONSIST OF A 1" WIDE YELLOW RETROREFLECTIVE STRIP AROUND THE OUTSIDE PERIMETER OF BACKPLATE WITH LOUVERS. THESE SHALL BE PAID FOR AS TRAFFIC SIGNAL BACKPLATE, RETROREFLECTIVE

FILE NAME = G:\CH13\0189\Road\Sheets - B2 Contract\20131894-SHT-Signals-Cable-Longa.dgn

TranSystems

USER NAME = mbmcwhorter	DESIGNED - BSH	REVISED -	
	DRAWN - MLB	REVISED -	
PLOT SCALE = 40.0000 ' / in.	CHECKED - MFD	REVISED -	
PLOT DATE = 9/25/2017	DATE - 8/7/2017	REVISED -	

STATE OF ILLINOIS
DEPARTMENT OF TRANSPORTATION

CABLE PLAN AND PHASE DESIGNATION
LONGMEADOW PARKWAY AT CONNECTOR ROAD

SCALE: 1"=20' | SHEET 340 OF 611 SHEETS

F.A.U. RTE.	SECTION	COUNTY	TOTAL SHEETS	SHEET NO.
2298	16-00215-11-PV	KANE	611	340
		CONTRACT NO. 61E05		

FED. ROAD DIST. NO. 1 | ILLINOIS | FED. AID PROJECT

PANEL SIGN DESIGN TYPE 2

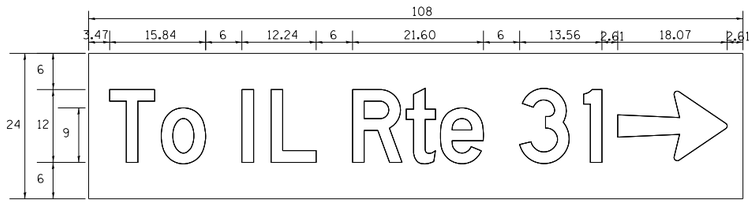

DESIGN SERIES	AREA (SQ FT)	SIGN PANEL TYPE	SHEETING TYPE	QTY. REQUIRED
D	18	2	ZZ	1

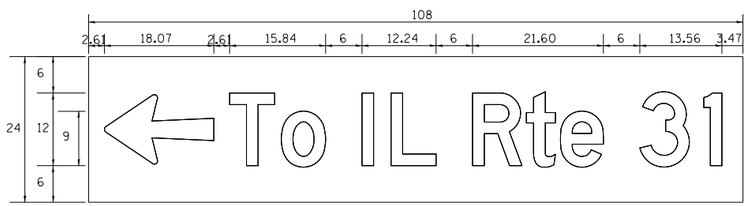

DESIGN SERIES	AREA (SQ FT)	SIGN PANEL TYPE	SHEETING TYPE	QTY. REQUIRED
D	18	2	ZZ	1

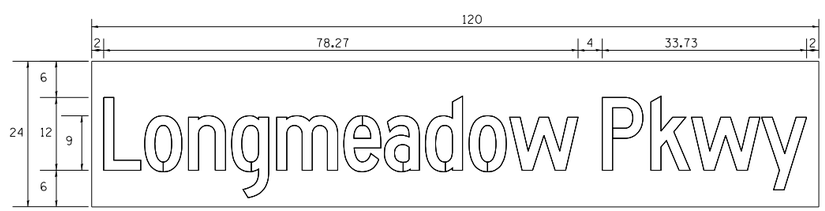

DESIGN SERIES	AREA (SQ FT)	SIGN PANEL TYPE	SHEETING TYPE	QTY. REQUIRED
C	20	2	ZZ	1

SCHEDULE OF QUANTITIES

ITEM	DESCRIPTION	QUANTITY	UNIT
72000100	SIGN PANEL - TYPE 1	15	SQ FT
72000200	SIGN PANEL - TYPE 2	56	SQ FT
80400200	ELECTRIC UTILITY SERVICE CONNECTION	1	LSUM
80500010	SERVICE INSTALLATION - GROUND MOUNTED	1	EACH
81028200	UNDERGROUND CONDUIT, GALVANIZED STEEL, 2" DIA.	893	FOOT
81028210	UNDERGROUND CONDUIT, GALVANIZED STEEL, 2 1/2" DIA.	804	FOOT
81028220	UNDERGROUND CONDUIT, GALVANIZED STEEL, 3" DIA.	40	FOOT
81028240	UNDERGROUND CONDUIT, GALVANIZED STEEL, 4" DIA.	752	FOOT
81400100	HANDHOLE	4	EACH
81400200	HEAVY-DUTY HANDHOLE	2	EACH
81400300	DOUBLE HANDHOLE	1	EACH
85700200	FULL-ACTUATED CONTROLLER AND TYPE IV CABINET	1	EACH
87301225	ELECTRIC CABLE IN CONDUIT, SIGNAL NO. 14 3C	562	FOOT
87301245	ELECTRIC CABLE IN CONDUIT, SIGNAL NO. 14 5C	1,850	FOOT
87301255	ELECTRIC CABLE IN CONDUIT, SIGNAL NO. 14 7C	807	FOOT
87301305	ELECTRIC CABLE IN CONDUIT, LEAD-IN, NO. 14 1 PAIR	2,425	FOOT
87301805	ELECTRIC CABLE IN CONDUIT, SERVICE, NO. 6 2 C	760	FOOT
87301900	ELECTRIC CABLE IN CONDUIT, EQUIPMENT GROUNDING CONDUCTOR, NO. 6 1C	1,163	FOOT
87501200	TRAFFIC SIGNAL POST, 16 FT.	1	EACH
87700170	STEEL MAST ARM ASSEMBLY AND POLE, 26 FT.	1	EACH
87700230	STEEL MAST ARM ASSEMBLY AND POLE, 38 FT.	1	EACH
87702930	STEEL COMBINATION MAST ARM ASSEMBLY AND POLE 40 FT.	1	EACH
87702980	STEEL COMBINATION MAST ARM ASSEMBLY AND POLE 50 FT.	1	EACH
87800100	CONCRETE FOUNDATION, TYPE A	4	FOOT
87800150	CONCRETE FOUNDATION, TYPE C	4	FOOT
87800400	CONCRETE FOUNDATION, TYPE E 30-INCH DIAMETER	10	FOOT
87800415	CONCRETE FOUNDATION, TYPE E 36-INCH DIAMETER	39	FOOT
88030020	SIGNAL HEAD, LED, 1-FACE, 3-SECTION, MAST-ARM MOUNTED	7	EACH
88030050	SIGNAL HEAD, LED, 1-FACE, 3-SECTION, BRACKET MOUNTED	3	EACH
88030080	SIGNAL HEAD, LED, 1-FACE, 4-SECTION, MAST ARM MOUNTED	2	EACH
88030110	SIGNAL HEAD, LED, 1-FACE, 5-SECTION, MAST-ARM MOUNTED	2	EACH
88200100	TRAFFIC SIGNAL BACKPLATE	5	EACH
88200510	TRAFFIC SIGNAL BACKPLATE, RETROREFLECTIVE	9	EACH
88500100	INDUCTIVE LOOP DETECTOR	7	EACH
88600700	PREFORMED DETECTOR LOOP	696	FOOT
88700200	LIGHT DETECTOR	2	EACH
88700300	LIGHT DETECTOR AMPLIFIER	1	EACH
X0323906	CAMERA POLE, 45 FT	1	EACH
X0323920	POLE MOUNTED EQUIPMENT CABINET, TYPE B	1	EACH
X0324085	EMERGENCY VEHICLE PRIORITY SYSTEM LINE SENSOR CABLE, NO. 20 3/C	683	FOOT
X0325949	ELECTRICAL SERVICE DISCONNECT, LIGHTING AND TRAFFIC SIGNAL	1	EACH
X1400146	HELIX FOUNDATION AND BREAKAWAY DEVICE	1	EACH
X8211190	LUMINAIRE, LED, HORIZONTAL MOUNT, 190 WATT (SPECIAL)	2	EACH
X8620200	UNINTERRUPTABLE POWER SUPPLY, SPECIAL	1	EACH
X8730104	ELECTRIC CABLE IN CONDUIT, SIGNAL NO. 10 2C	391	FOOT
XX008392	OUTDOOR RATED NETWORK CABLE	255	FOOT
XX007251	INTERSECTION VIDEO TRAFFIC MONITORING SYSTEM WITH PTZ CAMERA	1	EACH
XX007953	NETWORK CONFIGURATION	1	L SUM
XX008454	ETHERNET SWITCH, TYPE 2	1	EACH
Z0033056	OPTIMIZE TRAFFIC SIGNAL SYSTEM	1	EACH

NOTES:

1. STATIONS AND OFFSETS SHOWN ARE APPROXIMATE.
2. CONTRACTOR SHALL RESTORE WORK AREA AND REMOVE EXCESS MATERIAL AS PART OF THE WORK.
3. ALL STATIONS AND OFFSETS ON THIS SHEET REFERENCE THE ILL RTE 31 BASELINE.
4. SEE THE DISTRICT 1 TRAFFIC SIGNAL STANDARDS FOR FOUNDATION DEPTH REQUIREMENTS.

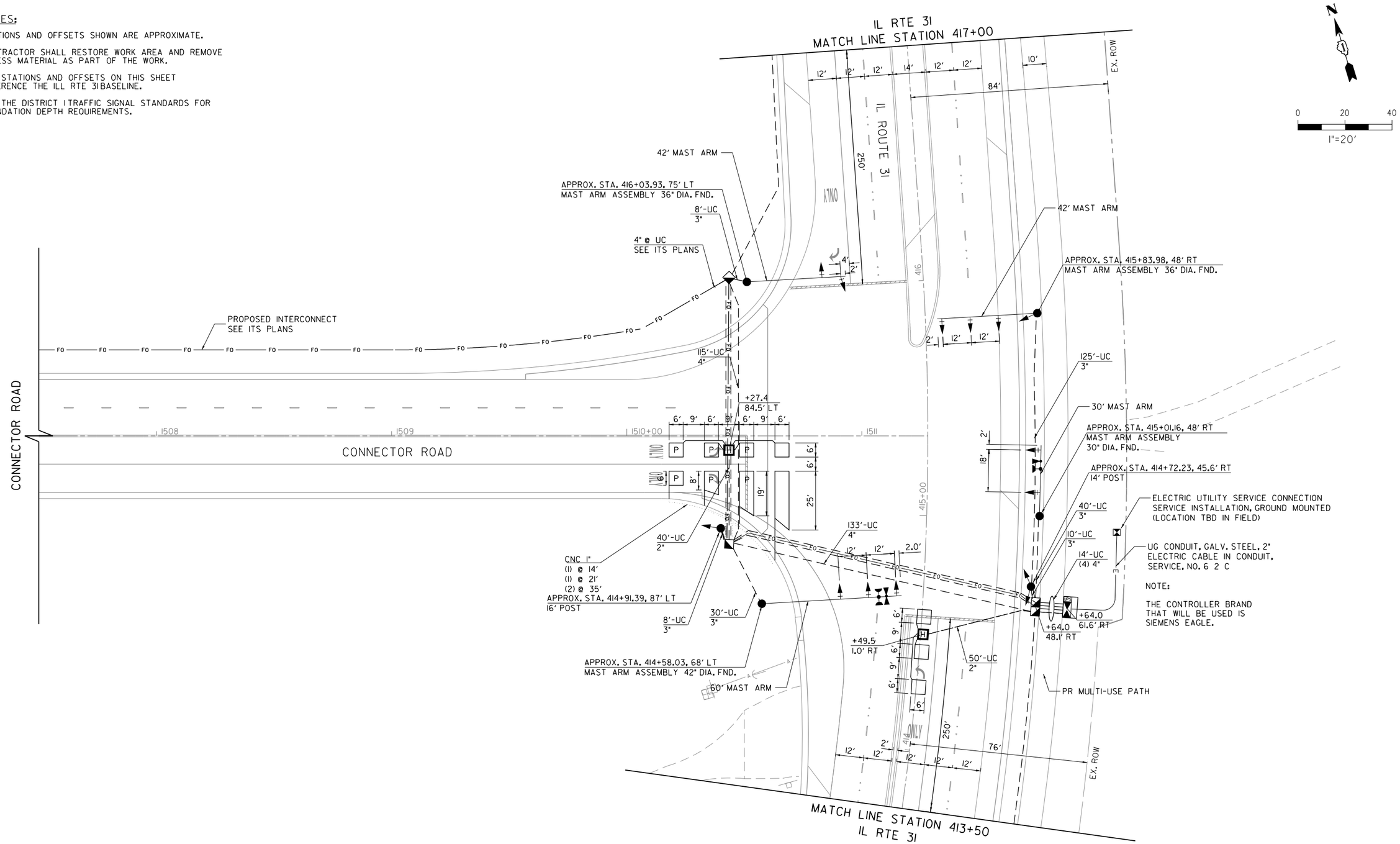

FILE NAME = G:\CH13\0109\Road\Sheets - B2 Contract\20131894-SHT-Signals-Install-IL31-1.dgn

TranSystems	USER NAME = mbmcwhorter	DESIGNED - BSH	REVISED -
		DRAWN - MLB	REVISED -
	PLOT SCALE = 40.0000 ' / in.	CHECKED - MFD	REVISED -
	PLOT DATE = 9/25/2017	DATE - 8/7/2017	REVISED -

STATE OF ILLINOIS
DEPARTMENT OF TRANSPORTATION

TRAFFIC SIGNAL INSTALLATION PLAN
IL ROUTE 31 AT CONNECTOR ROAD

SCALE: 1"=20' | SHEET 342 OF 611 SHEETS

F.A.U. RTE.	SECTION	COUNTY	TOTAL SHEETS	SHEET NO.
2298	16-00215-11-PV	KANE	611	342
		CONTRACT NO. 61E05		

FED. ROAD DIST. NO. 1 | ILLINOIS | FED. AID PROJECT

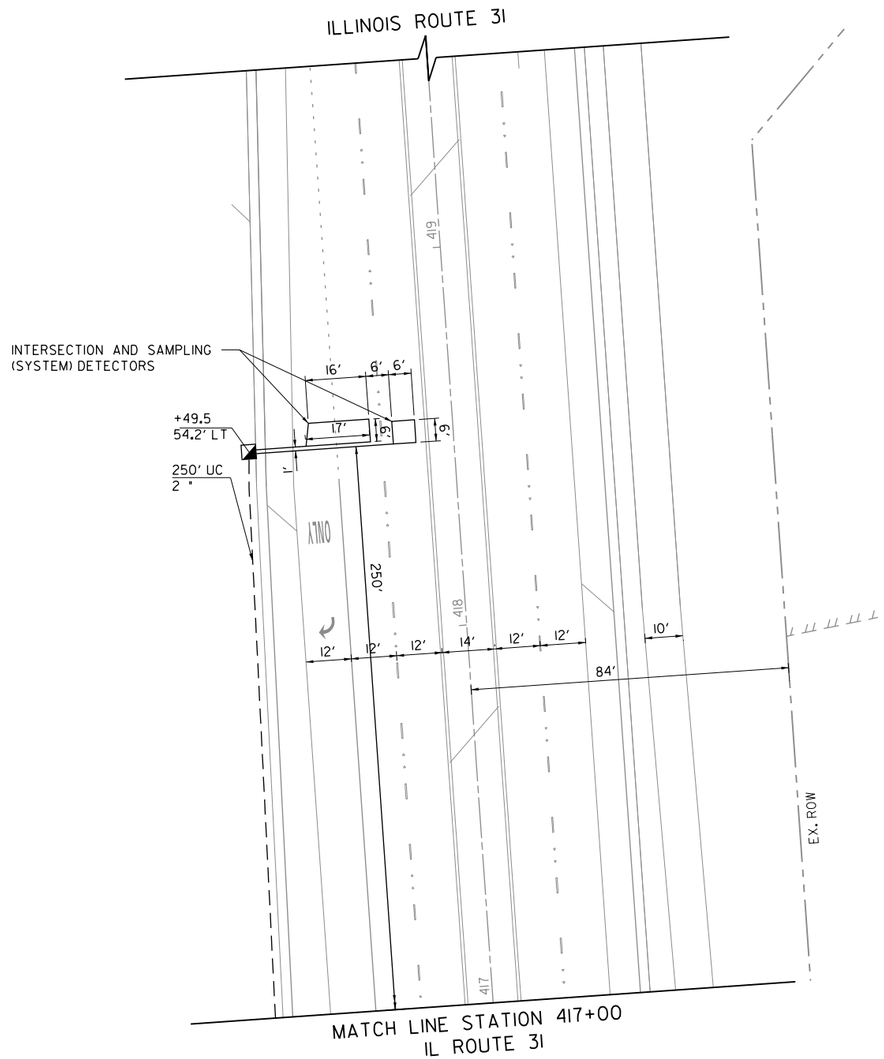

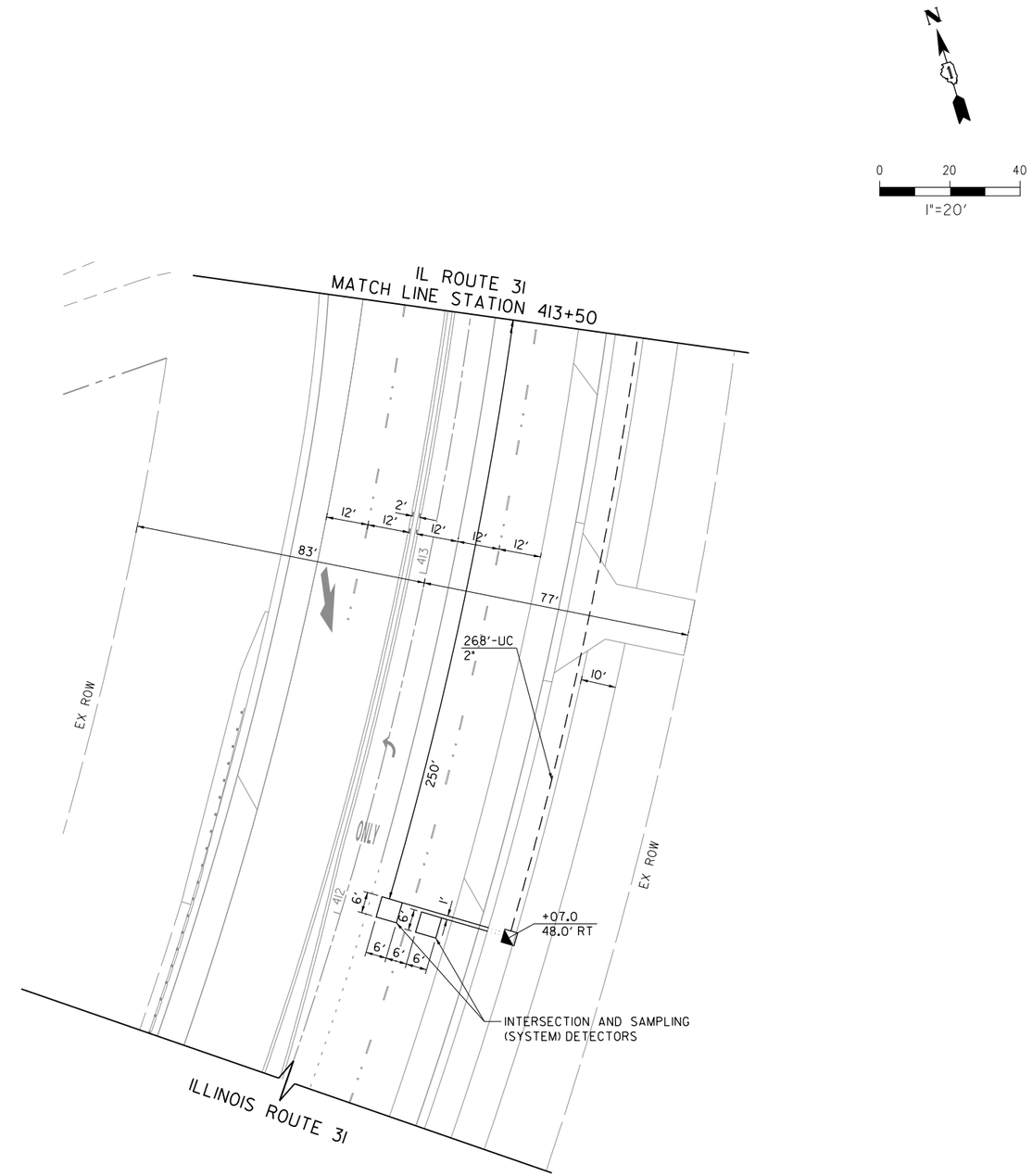

FILE NAME = G:\CHI3\0109\Road\Sheets - B2 Contract\20131894-SHT-Signals-Install-IL31-2.dgn

TranSystems	USER NAME = mbmcwhorter	DESIGNED - BSH	REVISED -
		DRAWN - MLB	REVISED -
	PLOT SCALE = 40.0000 ' / in.	CHECKED - MFD	REVISED -
	PLOT DATE = 9/25/2017	DATE - 8/7/2017	REVISED -

STATE OF ILLINOIS
DEPARTMENT OF TRANSPORTATION

TRAFFIC SIGNAL INSTALLATION PLAN
IL ROUTE 31 AT CONNECTOR ROAD

SCALE: 1"=20' | SHEET 343 OF 611 SHEETS

F.A.U. RTE.	SECTION	COUNTY	TOTAL SHEETS	SHEET NO.
2298	16-00215-11-PV	KANE	611	343
		CONTRACT NO. 61E05		
FED. ROAD DIST. NO. 1	ILLINOIS	FED. AID PROJECT		

CONTROLLER SEQUENCE

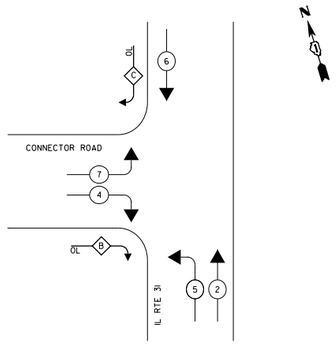

PHASE DESIGNATION DIAGRAM

RIGHT TURN OVERLAP PHASE DESIGNATION

OVERLAP LETTER		PERMISSIVE PHASE		PROTECTED PHASE
B	=	4	+	5
C	=	6	+	7

LEGEND

- DUAL ENTRY PHASE
- SINGLE ENTRY PHASE
- PEDESTRIAN PHASE
- OVERLAP
- * NUMBER REFERS TO ASSOCIATED PHASE

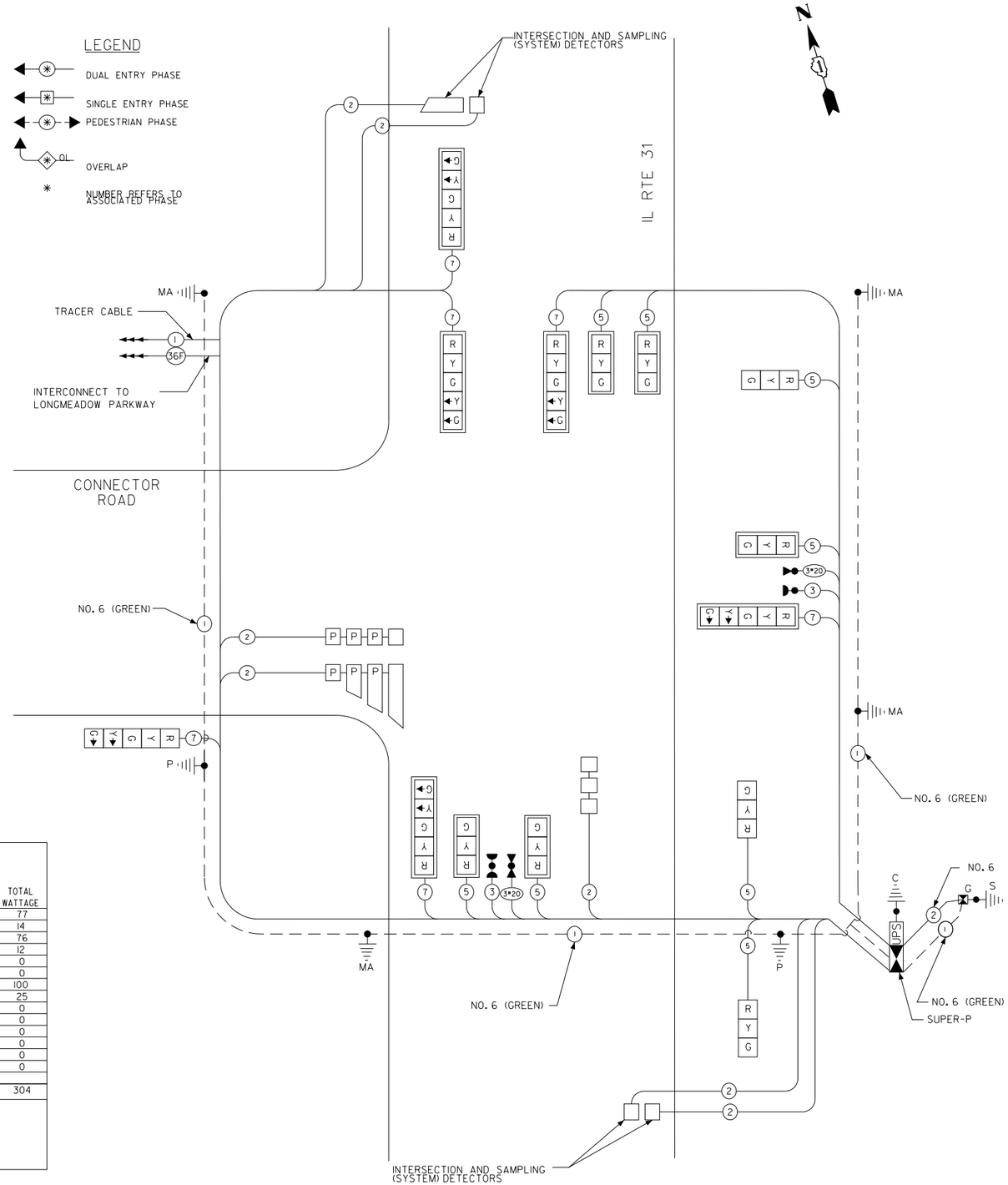

EMERGENCY VEHICLE PREEMPTION SEQUENCE

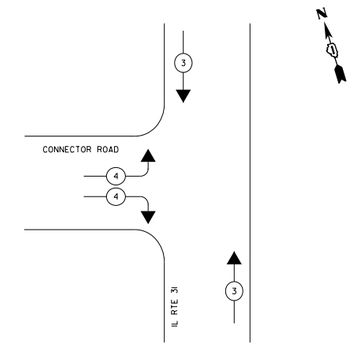

NOTE:

THE TRAFFIC SIGNAL CONTROL EQUIPMENT FOR THIS PROJECT SHALL BE NTCIP (LATEST VERSION)

I.D.O.T / KANE COUNTY TRAFFIC SIGNAL INSTALLATION ELECTRICAL SERVICE REQUIREMENTS					
TYPE	NO. LAMPS	WATTAGE INCAND.	WATTAGE LED	PERCENT (%) OPERATION	TOTAL WATTAGE
SIGNAL (RED)	14		11	50	77
(YELLOW)	14		20	5	14
(GREEN)	14		12	45	76
ARROW (EXCEPT FOR FYA)	12		10	10	12
FLASHING YELLOW ARROW (FYA)	0		12	30	0
PEDESTRIAN SIGNAL	0		20	100	0
CONTROLLER	1		100	100	100
UPS	1		25	100	25
ILLUM. SIGN (BLANK OUT)	0		25	5	0
VIDEO DETECTION SYSTEM	0		150	100	0
ILLUM. STREET NAME SIGN	0		120	50	0
LUMINAIRE (COMBO POLE)	0		200	50	0
PTZ / SURVEILLANCE CAMERA	0		100	100	0
FLASHING BEACON (SIGNAL)	0			50	0
				TOTAL =	304

ENERGY COSTS TO: KDOT
41W011 BURLINGTON RD
ST. CHARLES, IL. 60175

ENERGY SUPPLY CONTACT: ELIZABETH MOESCH
PHONE: (630) 723-2128
COMPANY: COMED

ENGINEER NOTES REGARDING ABOVE REQUIREMENTS:

1. LUMINAIRE WATTAGE DETERMINED BY ROADWAY LIGHTING DESIGN, ONLY INCLUDE IF LIGHTING IS POWERED BY SIGNAL.
2. FLASHING BEACON WATTAGE DETERMINED BY BEACON COLOR, USE WATTAGE SHOWN IN 'SIGNAL' TYPE ENTRIES.
3. IF SIGNAL DESIGN CONTAINS RED COLORED 'ARROWS', DISCUSS WITH TRAFFIC ENGINEER IF SEPARATE PERCENT OPERATION IS NEEDED FOR THESE ARROWS.
4. TOTAL WATTAGE AND TOTAL WATTAGE SUMMATION SHOULD ALWAYS DISPLAY CALCULATION TO FIRST DECIMAL (TENTHS) PLACE.

FILE NAME = G:\CH13\0109\Road\Sheets - B2 Contract\2013894-SHT-Signals-Cable-IL31.dgn

TranSystems

USER NAME = mbmcwhorter	DESIGNED - BSH	REVISED -	
	DRAWN - MLB	REVISED -	
PLOT SCALE = 40.0000 ' / in.	CHECKED - MFD	REVISED -	
PLOT DATE = 9/25/2017	DATE - 8/7/2017	REVISED -	

STATE OF ILLINOIS
DEPARTMENT OF TRANSPORTATION

CABLE PLAN AND PHASE DESIGNATION
IL ROUTE 31 AT CONNECTOR ROAD

SCALE: 1"=20' | SHEET 344 OF 611 SHEETS

F.A.U. RTE.	SECTION	COUNTY	TOTAL SHEETS	SHEET NO.
2298	16-00215-11-PV	KANE	611	344
		CONTRACT NO. 61E05		

FED. ROAD DIST. NO. 1 | ILLINOIS | FED. AID PROJECT

PANEL SIGN DESIGN TYPE 1

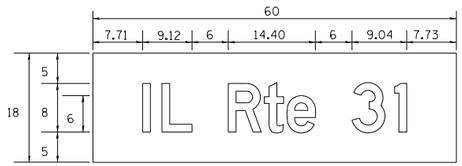

DESIGN SERIES	AREA (SQ FT)	SIGN PANEL TYPE	SHEETING TYPE	QTY. REQUIRED
D	7.5	1	ZZ	1

PANEL SIGN DESIGN TYPE 2

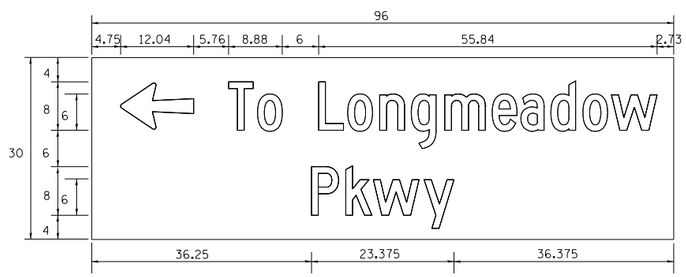

DESIGN SERIES	AREA (SQ FT)	SIGN PANEL TYPE	SHEETING TYPE	QTY. REQUIRED
C	20	2	ZZ	1

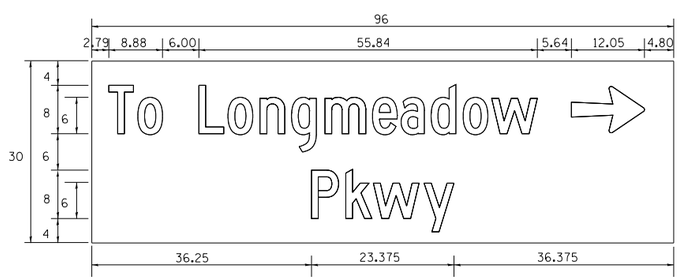

DESIGN SERIES	AREA (SQ FT)	SIGN PANEL TYPE	SHEETING TYPE	QTY. REQUIRED
C	20	2	ZZ	1

SCHEDULE OF QUANTITIES

ITEM	DESCRIPTION	QUANTITY	UNIT
72000100	SIGN PANEL - TYPE 1	7.5	SQ FT
72000200	SIGN PANEL - TYPE 2	40	SQ FT
80400200	ELECTRIC UTILITY SERVICE CONNECTION	1	LSUM
80500010	SERVICE INSTALLATION - GROUND MOUNTED	1	EACH
81028200	UNDERGROUND CONDUIT, GALVANIZED STEEL, 2" DIA.	723	FOOT
81028220	UNDERGROUND CONDUIT, GALVANIZED STEEL, 3" DIA.	221	FOOT
81028240	UNDERGROUND CONDUIT, GALVANIZED STEEL, 4" DIA.	304	FOOT
81400100	HANDHOLE	4	EACH
81400200	HEAVY-DUTY HANDHOLE	2	EACH
81400300	DOUBLE HANDHOLE	1	EACH
87301225	ELECTRIC CABLE IN CONDUIT, SIGNAL NO. 14 3C	395	FOOT
87301245	ELECTRIC CABLE IN CONDUIT, SIGNAL NO. 14 5C	1,357	FOOT
87301255	ELECTRIC CABLE IN CONDUIT, SIGNAL NO. 14 7C	1,532	FOOT
87301305	ELECTRIC CABLE IN CONDUIT, LEAD-IN, NO. 14 1 PAIR	2,187	FOOT
87301805	ELECTRIC CABLE IN CONDUIT, SERVICE, NO. 6 2 C	160	FOOT
87301900	ELECTRIC CABLE IN CONDUIT, EQUIPMENT GROUNDING CONDUCTOR, NO. 6 1C	656	FOOT
87501000	TRAFFIC SIGNAL POST, 14 FT.	1	EACH
87501200	TRAFFIC SIGNAL POST, 16 FT.	1	EACH
87700190	STEEL MAST ARM ASSEMBLY AND POLE, 30 FT.	1	EACH
87700250	STEEL MAST ARM ASSEMBLY AND POLE, 42 FT.	2	EACH
87700400	STEEL MAST ARM ASSEMBLY AND POLE, 60 FT.	1	EACH
87800100	CONCRETE FOUNDATION, TYPE A	8	FOOT
87800150	CONCRETE FOUNDATION, TYPE C	4	FOOT
87800400	CONCRETE FOUNDATION, TYPE E 30-INCH DIAMETER	14	FOOT
87800415	CONCRETE FOUNDATION, TYPE E 36-INCH DIAMETER	27	FOOT
87800420	CONCRETE FOUNDATION, TYPE E 42-INCH DIAMETER	21	FOOT
88030020	SIGNAL HEAD, LED, 1-FACE, 3-SECTION, MAST-ARM MOUNTED	5	EACH
88030050	SIGNAL HEAD, LED, 1-FACE, 3-SECTION, BRACKET MOUNTED	3	EACH
88030100	SIGNAL HEAD, LED, 1-FACE, 5-SECTION, BRACKET MOUNTED	1	EACH
88030110	SIGNAL HEAD, LED, 1-FACE, 5-SECTION, MAST-ARM MOUNTED	5	EACH
88200410	TRAFFIC SIGNAL BACKPLATE, LOUVERED, FORMED PLASTIC	10	EACH
88500100	INDUCTIVE LOOP DETECTOR	7	EACH
88600100	DETECTOR LOOP, TYPE I	427	FOOT
88600700	PREFORMED DETECTOR LOOP	221	FOOT
X0324085	EMERGENCY VEHICLE PRIORITY SYSTEM LINE SENSOR CABLE, NO. 20 3/C	403	FOOT
X0325949	ELECTRICAL SERVICE DISCONNECT, LIGHTING AND TRAFFIC SIGNAL	1	EACH
X1400107	FULL-ACTUATED CONTROLLER AND TYPE SUPER P CABINET	1	EACH
X8620200	UNINTERRUPTABLE POWER SUPPLY, SPECIAL	1	EACH
XX008454	ETHERNET SWITCH, TYPE 2	1	EACH
Z0033056	OPTIMIZE TRAFFIC SIGNAL SYSTEM	1	EACH

FOC AT CONTINUOUS 75.0' OFFSET FROM STA 2101+00 TO 2105+00

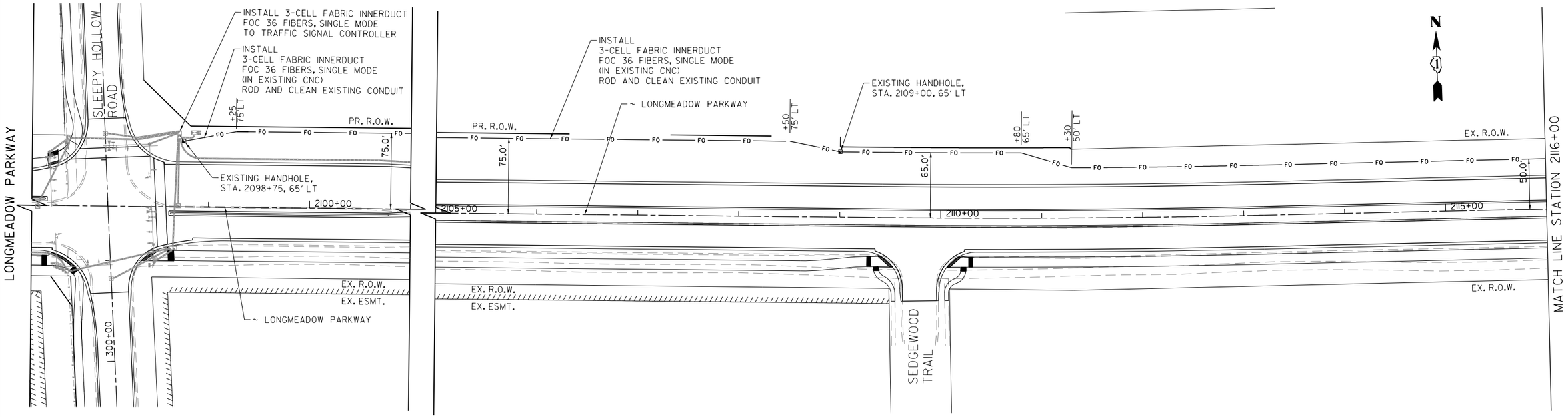

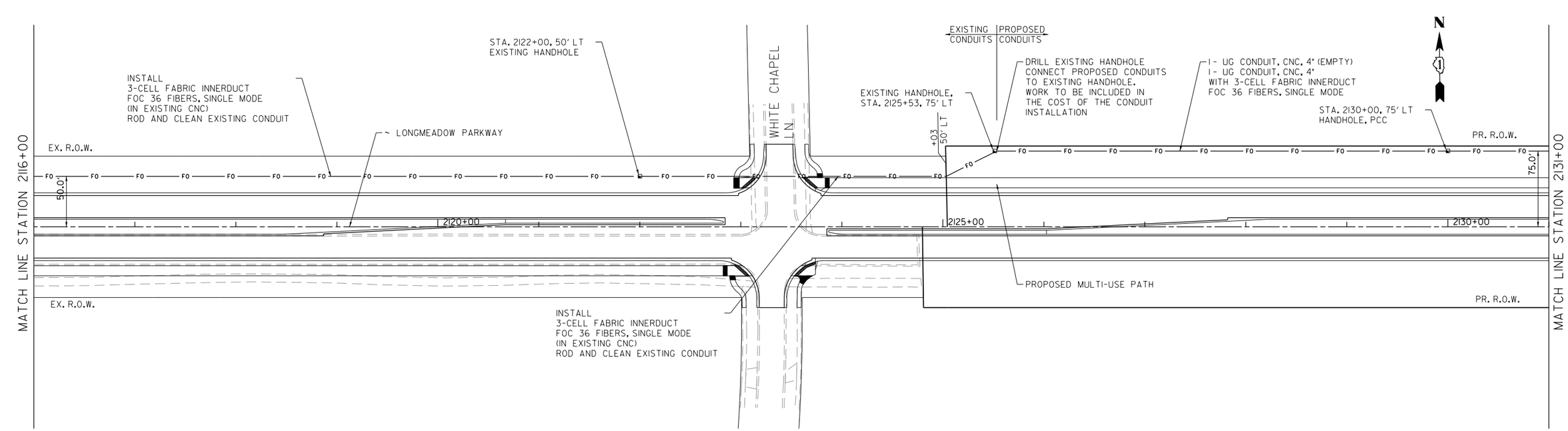

FILE NAME = G:\CHI3\0109\Road\Sheets - B2 Contract\20131894-SHT-FOC-02.dgn

USER NAME = mbmcwhorter	DESIGNED - MFD	REVISED -	STATE OF ILLINOIS DEPARTMENT OF TRANSPORTATION
	DRAWN - MFD	REVISED -	
PLOT SCALE = 100.0000 ' / in.	CHECKED - MFD	REVISED -	
PLOT DATE = 9/25/2017	DATE - 8/7/2017	REVISED -	

LONGMEADOW PARKWAY
FIBER-OPTIC CABLE INTERCONNECT PLAN

SCALE: 1" = 50' | SHEET 346 OF 611 SHEETS | STA. 2101+00 TO STA. 2131+00

F.A.P. RTE.	SECTION	COUNTY	TOTAL SHEETS	SHEET NO.
2298	16-00215-11-PV	KANE	611	346
		CONTRACT NO. 61E05		

FED. ROAD DIST. NO. 1 | ILLINOIS | FED. AID PROJECT

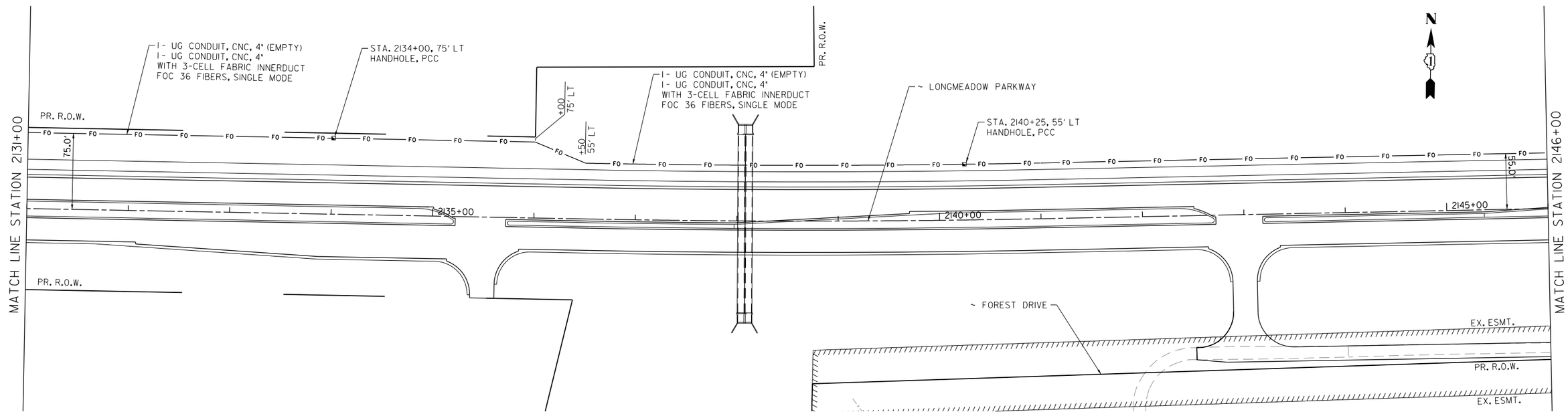

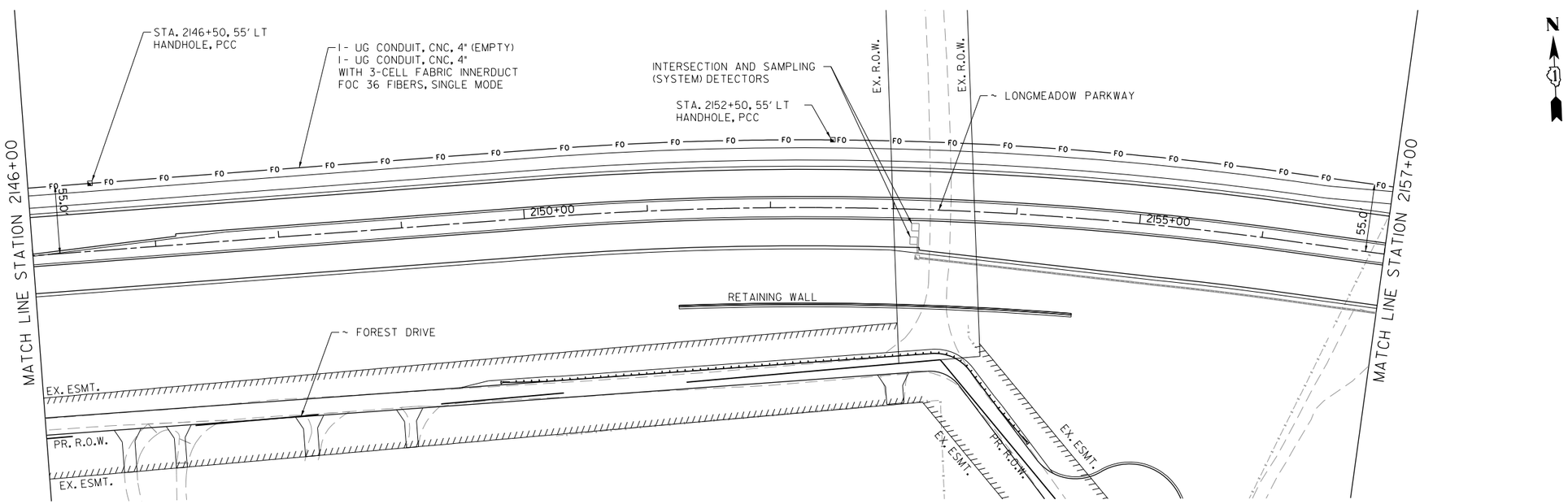

FILE NAME = G:\CHI3\0109\Road\Sheets - B2 Contract\20131894-SHT-FOC-03.dgn

TranSystems

USER NAME = mbmcwhorter	DESIGNED - MFD	REVISED -	
	DRAWN - MFD	REVISED -	
PLOT SCALE = 100.0000 ' / in.	CHECKED - MFD	REVISED -	
PLOT DATE = 9/25/2017	DATE - 8/7/2017	REVISED -	

STATE OF ILLINOIS
DEPARTMENT OF TRANSPORTATION

LONGMEADOW PARKWAY
FIBER-OPTIC CABLE INTERCONNECT PLAN

SCALE: 1" = 50' | SHEET 347 OF 611 SHEETS | STA. 2131+00 TO STA. 2157+00

F.A.P. RTE.	SECTION	COUNTY	TOTAL SHEETS	SHEET NO.
2298	16-00215-11-PV	KANE	611	347
		CONTRACT NO. 61E05		

FED. ROAD DIST. NO. 1 | ILLINOIS | FED. AID PROJECT

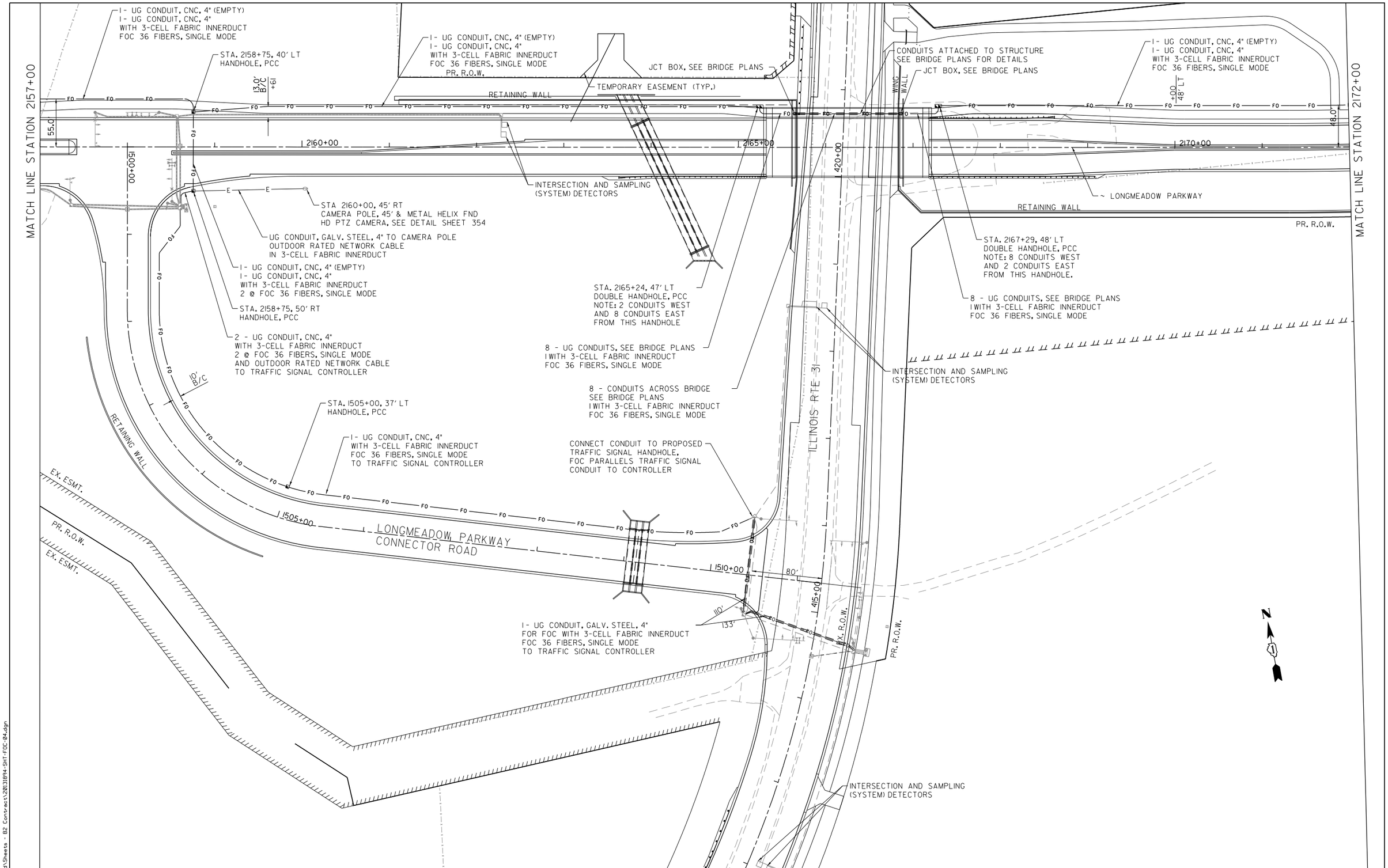

FILE NAME = G:\CH13\0109\Road\Sheets - B2 Contract\20131894-SHT-FOC-04.dgn

Tran Systems

USER NAME = mbmcwhorter	DESIGNED - [redacted]	REVISED -	
	DRAWN - [redacted]	REVISED -	
PLOT SCALE = 100.0000 ' / in.	CHECKED - MFD	REVISED -	
PLOT DATE = 9/25/2017	DATE - 8/7/2017	REVISED -	

STATE OF ILLINOIS
DEPARTMENT OF TRANSPORTATION

LONGMEADOW PARKWAY
FIBER-OPTIC CABLE INTERCONNECT PLAN

SCALE: 1" = 50' | SHEET 348 OF 611 SHEETS | STA. 2157+00 TO STA. 2172+00

F.A.U. RTE.	SECTION	COUNTY	TOTAL SHEETS	SHEET NO.
2298	16-00215-11-PV	KANE	611	348
		CONTRACT NO. 61E05		

FED. ROAD DIST. NO. 1 | ILLINOIS | FED. AID PROJECT

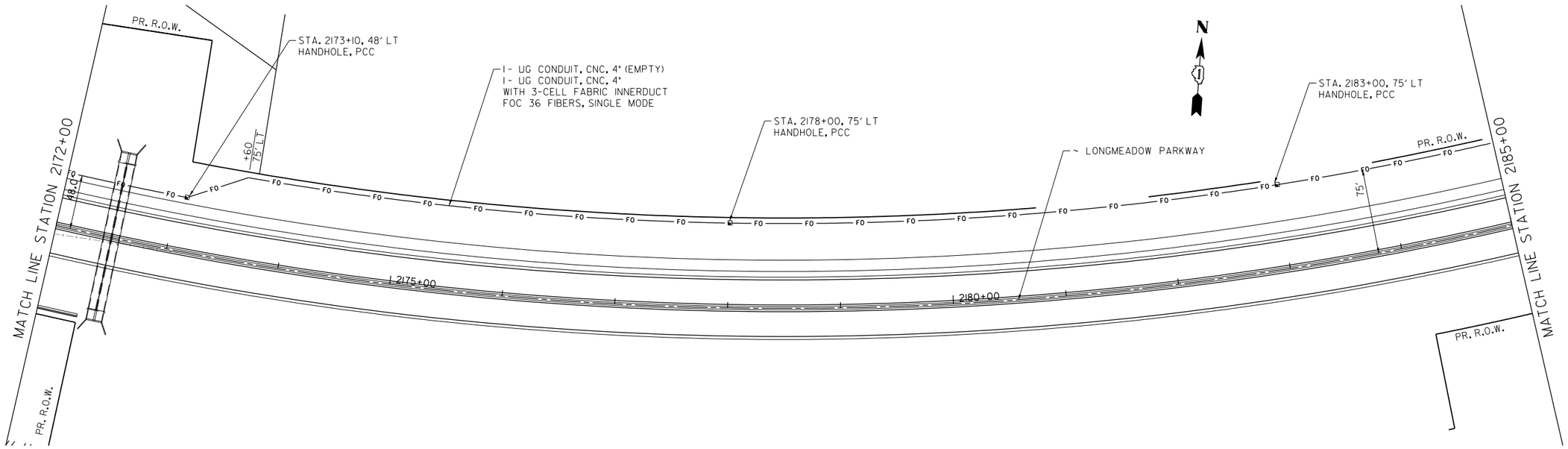

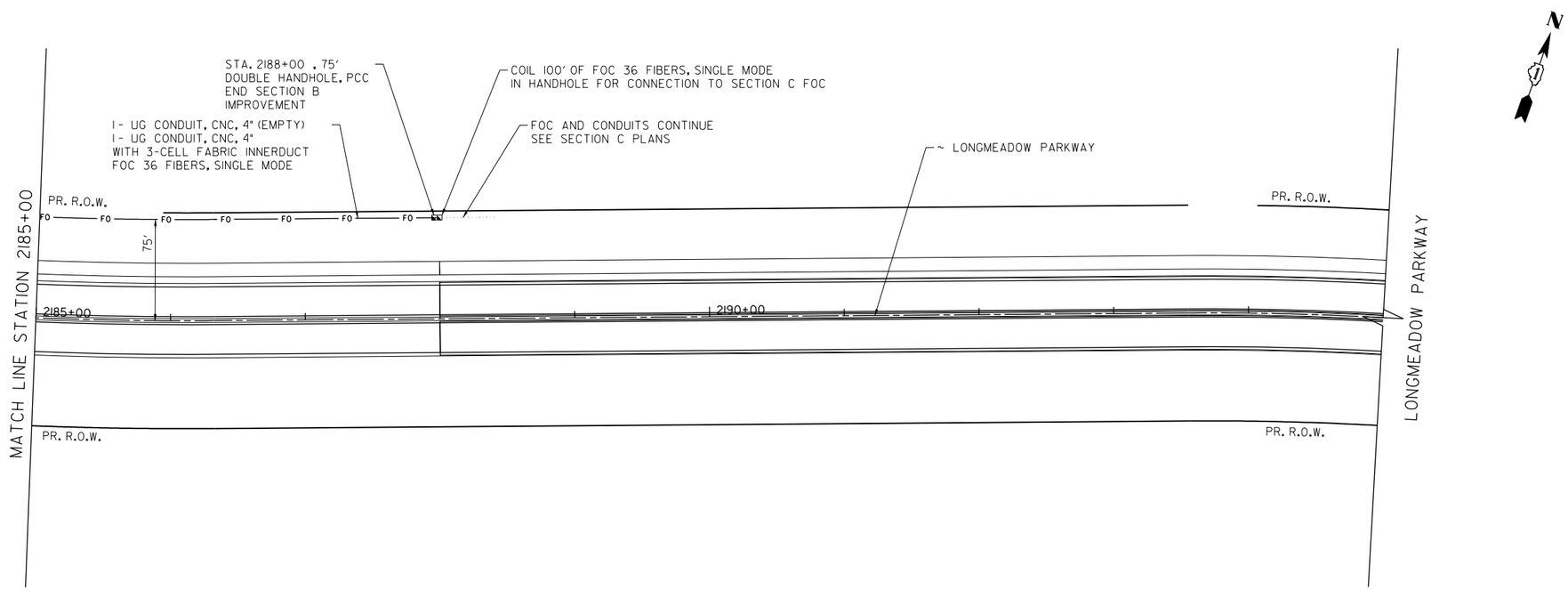

FILE NAME = G:\CHI3\0109\Road\Sheets - B2 Contract\20131894-SHT-FOC-05.dgn

TranSystems

USER NAME = mbmcwhorter	DESIGNED - MFD	REVISED -	
	DRAWN - MFD	REVISED -	
PLOT SCALE = 100.0000 ' / in.	CHECKED - MFD	REVISED -	
PLOT DATE = 9/25/2017	DATE - 8/7/2017	REVISED -	

STATE OF ILLINOIS
DEPARTMENT OF TRANSPORTATION

LONGMEADOW PARKWAY
FIBER-OPTIC CABLE INTERCONNECT PLAN

SCALE: 1" = 50' | SHEET 349 OF 611 SHEETS | STA. 2172+00 TO STA. 2195+00

F.A.P. RTE.	SECTION	COUNTY	TOTAL SHEETS	SHEET NO.
2298	16-00215-11-PV	KANE	611	349
		CONTRACT NO. 61E05		

FED. ROAD DIST. NO. 1 | ILLINOIS | FED. AID PROJECT

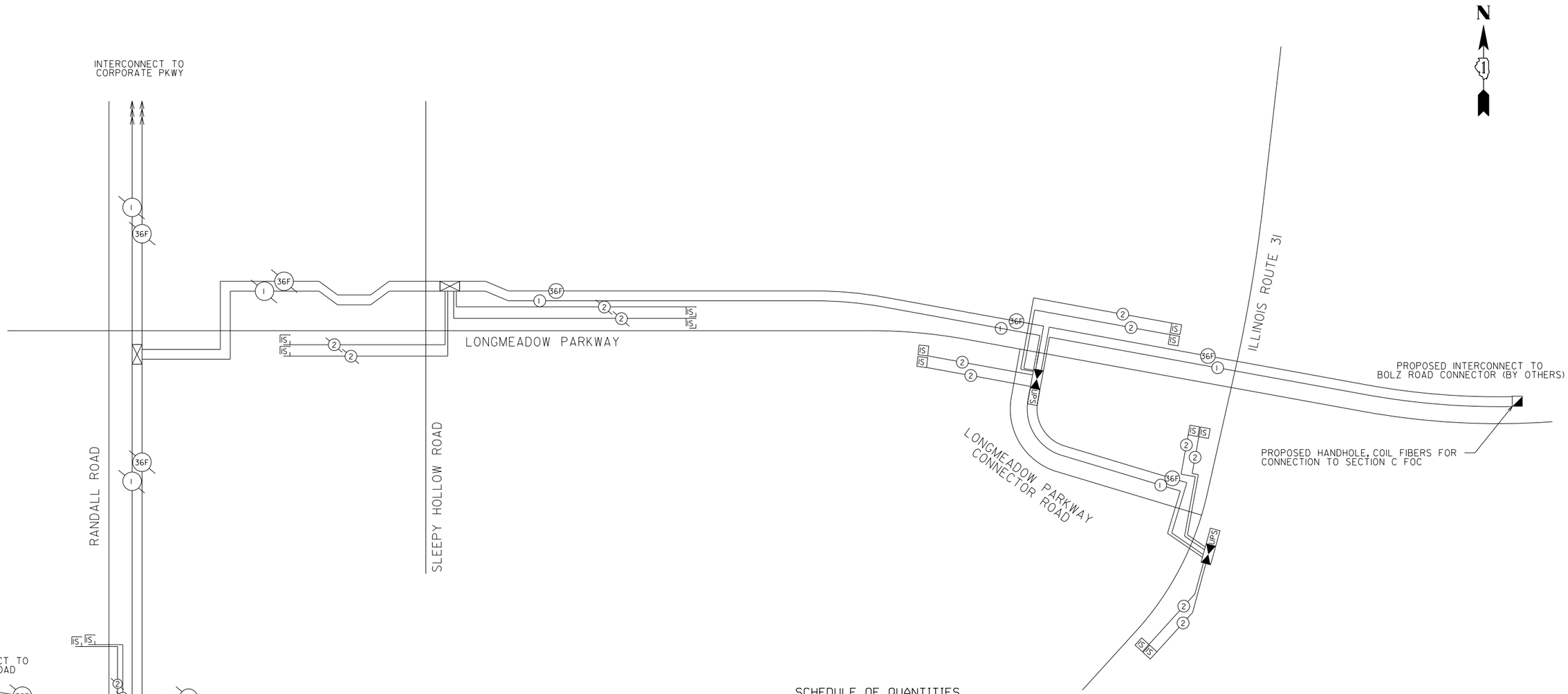

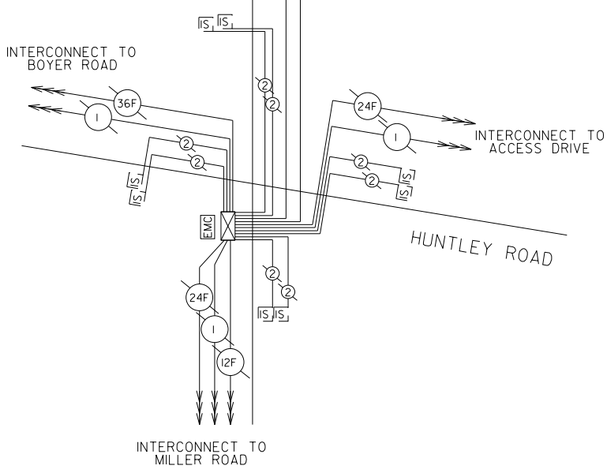

SCHEDULE OF QUANTITIES

CODE NO.	DESCRIPTION	UNIT	QUANTITY
81028240	UNDERGROUND CONDUIT, GALVANIZED STEEL, 4" DIA.	FOOT	383
81028790	UNDERGROUND CONDUIT, COILABLE NONMETALLIC CONDUIT, 4" DIA.	FOOT	14,138
81400100	HANDHOLE	EACH	11
81400300	DOUBLE HANDHOLE	EACH	3
87300925	ELECTRIC CABLE IN CONDUIT, TRACER, NO. 14 IC	FOOT	10,618
X8710031	FIBER OPTIC CABLE 36 FIBERS, SINGLE MODE	FOOT	11,322
XX008963	THREE-CELL FABRIC INNERDUCT	FOOT	11,186
XX008594	FIBER OPTIC CABLE TERMINATION, 6 FIBERS	EACH	1
XX009034	FIBER OPTIC CABLE TERMINATION, 12 FIBERS	EACH	2
	FIBER OPTIC CABLE TERMINATION, 24 FIBERS	EACH	2

FILE NAME = G:\CH13\0109\Road\Sheets - B2 Contract\2013894-SHT-FOC-SCHEMATIC.dgn

TranSystems

USER NAME = mbmcwhorter	DESIGNED - BSH	REVISED -	
	DRAWN - MLB	REVISED -	
PLOT SCALE = 20.0000 ' / in.	CHECKED - MFD	REVISED -	
PLOT DATE = 9/25/2017	DATE - 8/7/2017	REVISED -	

STATE OF ILLINOIS
DEPARTMENT OF TRANSPORTATION

LONGMEADOW PARKWAY
FOC INTERCONNECT SCHEMATIC

SCALE: N.T.S. | SHEET 350 OF 611 SHEETS

F.A.U. RTE.	SECTION	COUNTY	TOTAL SHEETS	SHEET NO.
2298	16-00215-11-PV	KANE	611	350
		CONTRACT NO. 61E05		

FED. ROAD DIST. NO. 1 | ILLINOIS | FED. AID PROJECT

NOTE:
LONGMEADOW PARKWAY AT SLEEPY HOLLOW ROAD IS AN EXISTING CONTROLLER. THE ONLY WORK INCLUDED HERE IS THE FIBER OPTIC TERMINATION FROM THE CONNECTOR ROAD. THE CONTRACTOR SHALL MAINTAIN THE EXISTING SIGNAL INSTALLATION WHILE INSTALLING THE FIBER OPTIC CABLE AND TERMINATIONS. THIS WILL BE PAID FOR AS MAINTENANCE OF EXISTING TRAFFIC SIGNAL INSTALLATION.

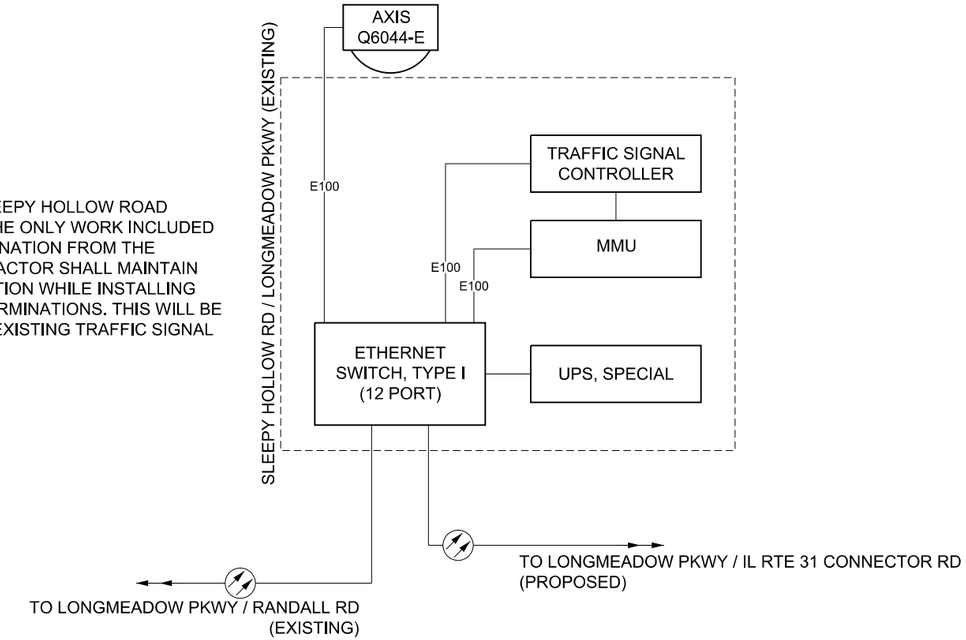

LONGMEADOW PARKWAY AT SLEEPY HOLLOW ROAD

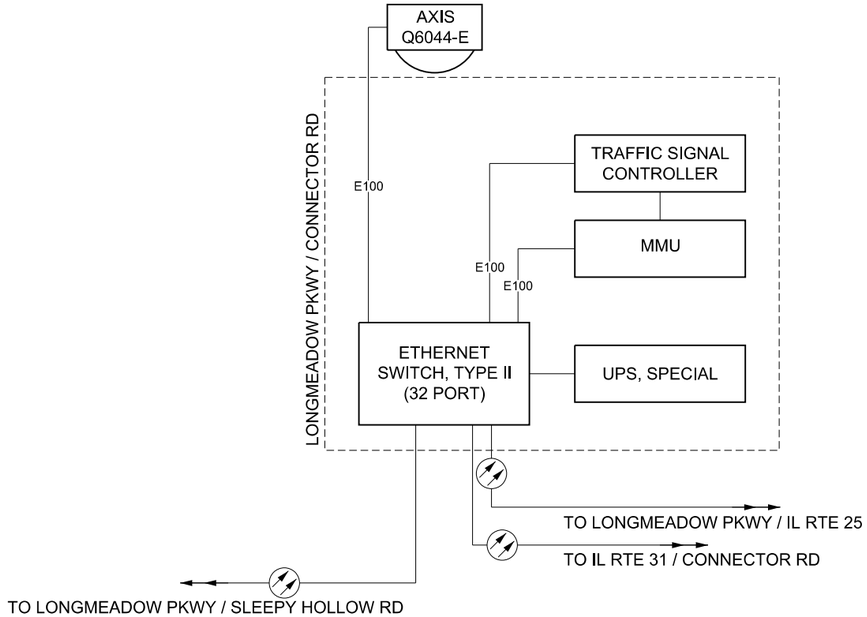

LONGMEADOW PARKWAY AT CONNECTOR ROAD

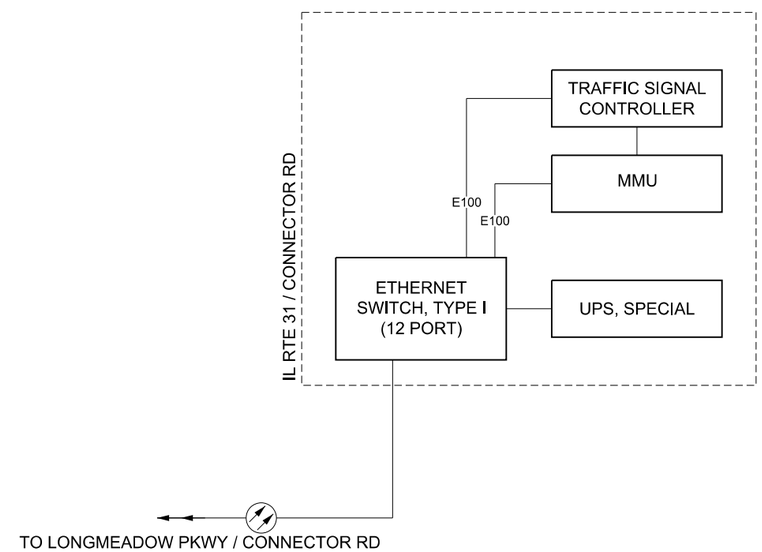

CONNECTOR ROAD AT IL RTE 31

FILE NAME = G:\CH13\0109\Road\Sheets - B2 Contract\2013894-SHT-Signals_Cabinet Detail-01.dgn

TranSystems

USER NAME = mbmcwhorter	DESIGNED - BSH	REVISED -	
	DRAWN - MLB	REVISED -	
PLOT SCALE = 40.0000 ' / in.	CHECKED - MFD	REVISED -	
PLOT DATE = 9/25/2017	DATE - 8/7/2017	REVISED -	

STATE OF ILLINOIS
DEPARTMENT OF TRANSPORTATION

CABINET DETAIL 1
LONGMEADOW PARKWAY

SCALE: N.T.S. | SHEET 351 OF 611 SHEETS

F.A.U. RTE.	SECTION	COUNTY	TOTAL SHEETS	SHEET NO.
2298	16-00215-11-PV	KANE	611	351

CONTRACT NO. 61E05

FED. ROAD DIST. NO. 1 | ILLINOIS | FED. AID PROJECT

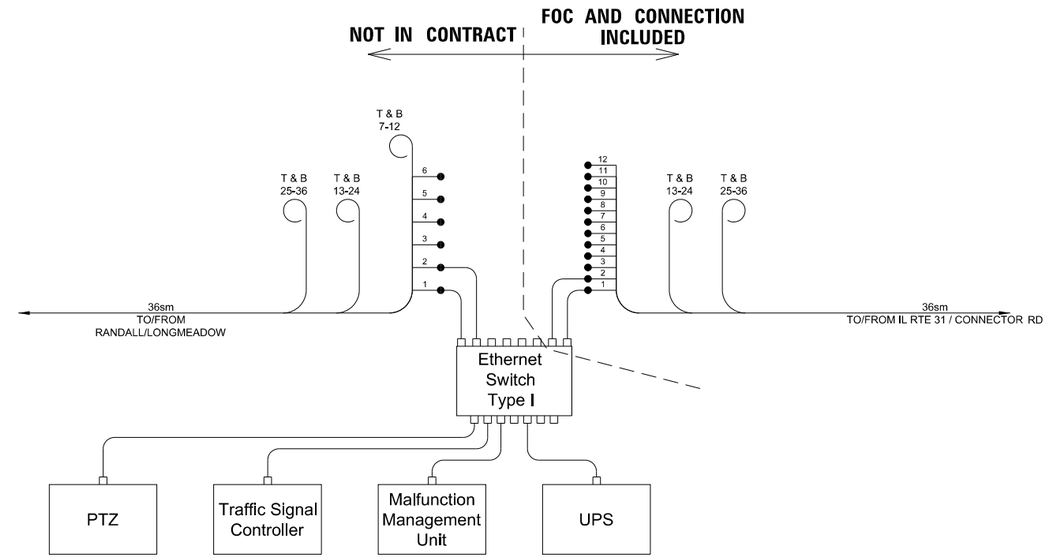

LONGMEADOW PARKWAY AT SLEEPY HOLLOW ROAD

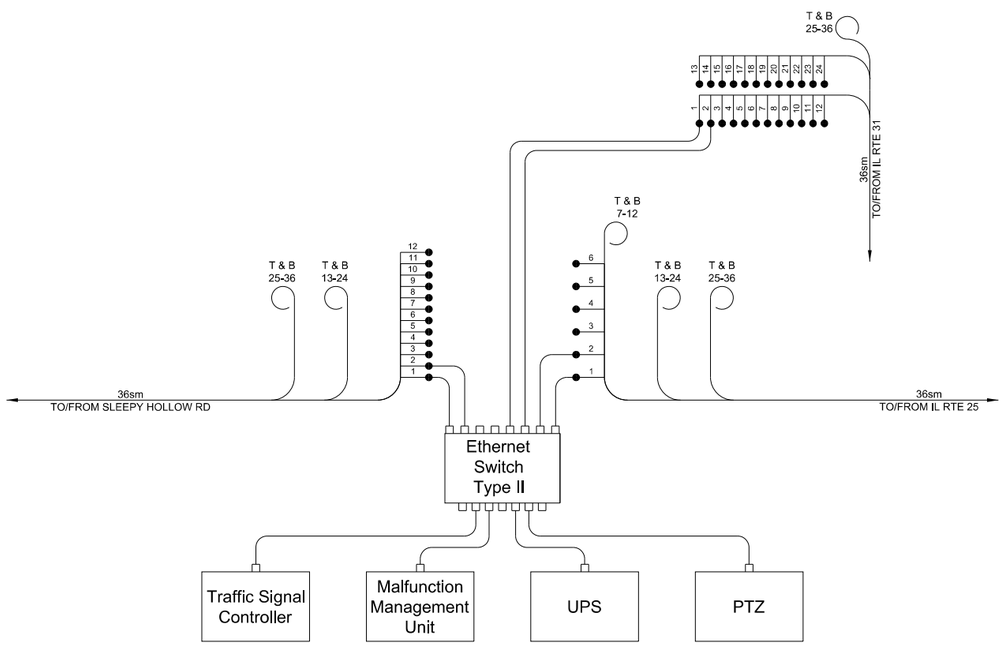

LONGMEADOW PARKWAY AT CONNECTOR ROAD

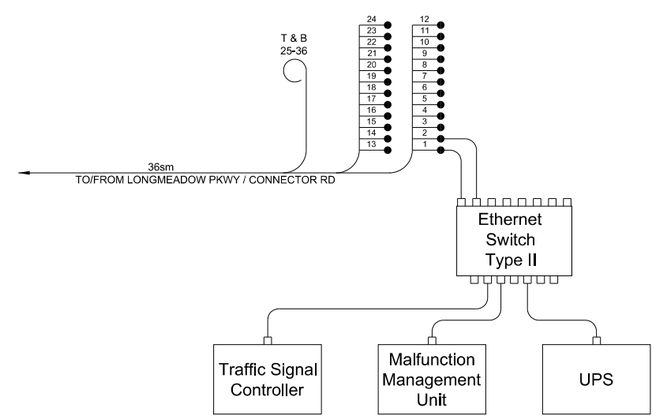

CONNECTOR ROAD AT IL RTE 31

FILE NAME = G:\CHI3\0109\Road\Sheets - B2 Contract\2013894-SHT-Signals_Fiber Splicing Diagram-01.dgn

TranSystems

USER NAME = mbmcwhorter	DESIGNED - BSH	REVISED -	
	DRAWN - MLB	REVISED -	
PLOT SCALE = 40.0000 ' / in.	CHECKED - MFD	REVISED -	
PLOT DATE = 9/25/2017	DATE - 8/7/2017	REVISED -	

STATE OF ILLINOIS
DEPARTMENT OF TRANSPORTATION

FIBER SPLICING DIAGRAM
LONGMEADOW PARKWAY

SCALE: N.T.S. | SHEET 352 OF 611 SHEETS

F.A.U. RTE.	SECTION	COUNTY	TOTAL SHEETS	SHEET NO.
2298	16-00215-11-PV	KANE	611	352
		CONTRACT NO. 61E05		

FED. ROAD DIST. NO. 1 | ILLINOIS | FED. AID PROJECT

ITS NOTES

1. ALL UNDERGROUND CONDUITS USED FOR FIBER SHALL BE COILABLE NONMETALLIC HDPE CONDUIT, SCHEDULE 80 AND SHALL BE BLACK IN COLOR, UNLESS NOTED OTHERWISE.
2. ALL WORK SHALL BE IN ACCORDANCE WITH THE LATEST EDITION OF THE FOLLOWING SPECIFICATIONS, WHICH ARE HEREBY MADE A PART HEREOF:
   - A. STANDARD SPECIFICATIONS FOR ROADWAY AND BRIDGE CONSTRUCTION IN ILLINOIS. AS PREPARED BY IDOT.
   - B. THE NATIONAL ELECTRICAL CODE
   - C. MUNICIPAL CODES & STANDARDS
   - D. ILLINOIS MUNICIPAL SIGNAL ASSOCIATION (IMSA) STANDARDS.
3. THE CONTRACTOR SHALL VERIFY ALL UTILITY LOCATIONS PRIOR TO CONSTRUCTION.
4. THE ELECTRICAL CONTRACTOR SHALL FURNISH ONE SET OF RECORD DRAWINGS TO THE OWNERS REPRESENTATIVE UPON COMPLETION OF THE ELECTRICAL AND ITS IMPROVEMENTS. THE DRAWINGS SHALL SHOW THE INSTALLED LOCATION OF ALL EQUIPEMENT, UNDERGROUND WIRING & CONTROLLER CABINETS.
5. CONDUIT HANGAR SPACING UNDER BRIDGE DECK SHALL NOT EXCEED 8 FEET. THE COST OF INSTALLATION AND MATERIALS FOR HANGARS SHALL BE INCLUDED IN THE COST OF ITS CONDUIT INSTALLATION. SEE STRUCTURAL PLANS FOR ADDITIONAL INFORMATION.
6. ALL FIBER OPTIC CABLE SPLICES SHALL BE LOCATED AT TRAFFIC SIGNAL CONTROLLER CABINETS. THE CONTRACTOR SHALL COORDINATE WITH THE ENGINEER AND THE ADJACENT CONTRACTS TO ELIMINATE SPLICES AT THE CONTRACT LIMITS.
7. THE COST OF CONNECTIONS BETWEEN CONDUITS AND HANDHOLES, AND BETWEEN CONDUITS OF DIFFERENT MATERIALS SHALL BE INCLUDED IN THE COST OF THE CONDUIT INSTALLATION. CONNECTIONS BETWEEN DIFFERENT MATERIALS SHALL BE APPROVED BY THE ENGINEER.
8. ALL INTERCONNECTED DEVICES SHALL BE CONFIGURED AND ASSIGNED RESPECTIVE IP ADDRESSES AS OUTLINED BY KANE COUNTY'S IP NAMING CONVENTION SCHEME AND ASSIGNED LOCATION ID AS INSTRUCTED BY KANE COUNTY TRAFFIC (630-208-3139). THIS WORK ALONG WITH ALL REQUIRED COMMUNICATION WILL BE PAID FOR AS PART OF NETWORK CONFIGURATION.
9. ALL COSTS ASSOCIATED WITH THE COORDINATION OF FIBER OPTIC CABLE TERMINATION POINTS SHALL BE INCLUDED IN THE PRICE OF THE FIBER OPTIC CABLE BEING PLACED. IF THE CONTRACTOR IS REQUESTED BY THE ENGINEER TO RUN FIBER OPTIC CABLE BEYOND THE CONTRACT LIMITS IN ORDER TO TERMINATE AT THE CLOSEST TRAFFIC SIGNAL CABINET, THE COST ASSOCIATED WITH THIS ADDITIONAL WORK SHALL BE AT THE AGREED UPON UNIT PRICE FOR THE FIBER OPTIC CABLE BEING INSTALLED AND THE ASSOCIATED COST FOR FIBER OPTIC CABLE TERMINATIONS (IF ALSO REQUESTED BY THE ENGINEER).

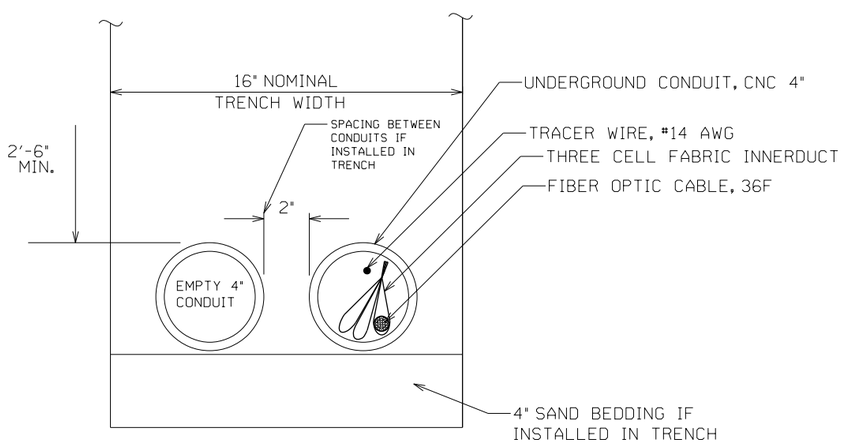

ITS FOC/ INTERCONNECT TRENCH DETAIL
N.T.S.

ITS LEGEND

	PROPOSED	EXISTING
HANDHOLE		
HEAVY DUTY HANDHOLE	H	H
DOUBLE HANDHOLE		
FIBER OPTIC CABLE IN CONDUIT	FO	FO

FILE NAME = G:\CH13\0109\Road\Sheets - B2 Contract\2013894-SHT-ITS NOTES AND BILL OF MATERIALS.dgn

TranSystems

USER NAME = mbmcwhorter	DESIGNED - BSH	REVISED -
	DRAWN - MLB	REVISED -
PLOT SCALE = 20.0000 ' / in.	CHECKED - MFD	REVISED -
PLOT DATE = 9/25/2017	DATE - 8/7/2017	REVISED -

STATE OF ILLINOIS
DEPARTMENT OF TRANSPORTATION

LONGMEADOW PARKWAY FOC INTERCONNECT
ITS NOTES AND SCHEDULE OF QUANTITIES

SCALE: N.T.S. | SHEET 353 OF 611 SHEETS

F.A.U. RTE.	SECTION	COUNTY	TOTAL SHEETS	SHEET NO.
2298	16-00215-11-PV	KANE	611	353
		CONTRACT NO. 61E05		

FED. ROAD DIST. NO. 1 | ILLINOIS | FED. AID PROJECT

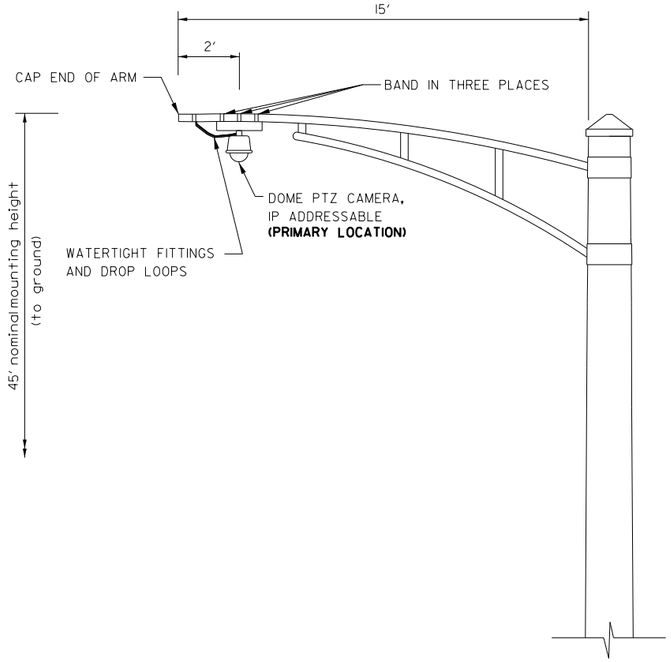

CAMERA MOUNTING ASSEMBLY DETAIL

(NOT TO SCALE)

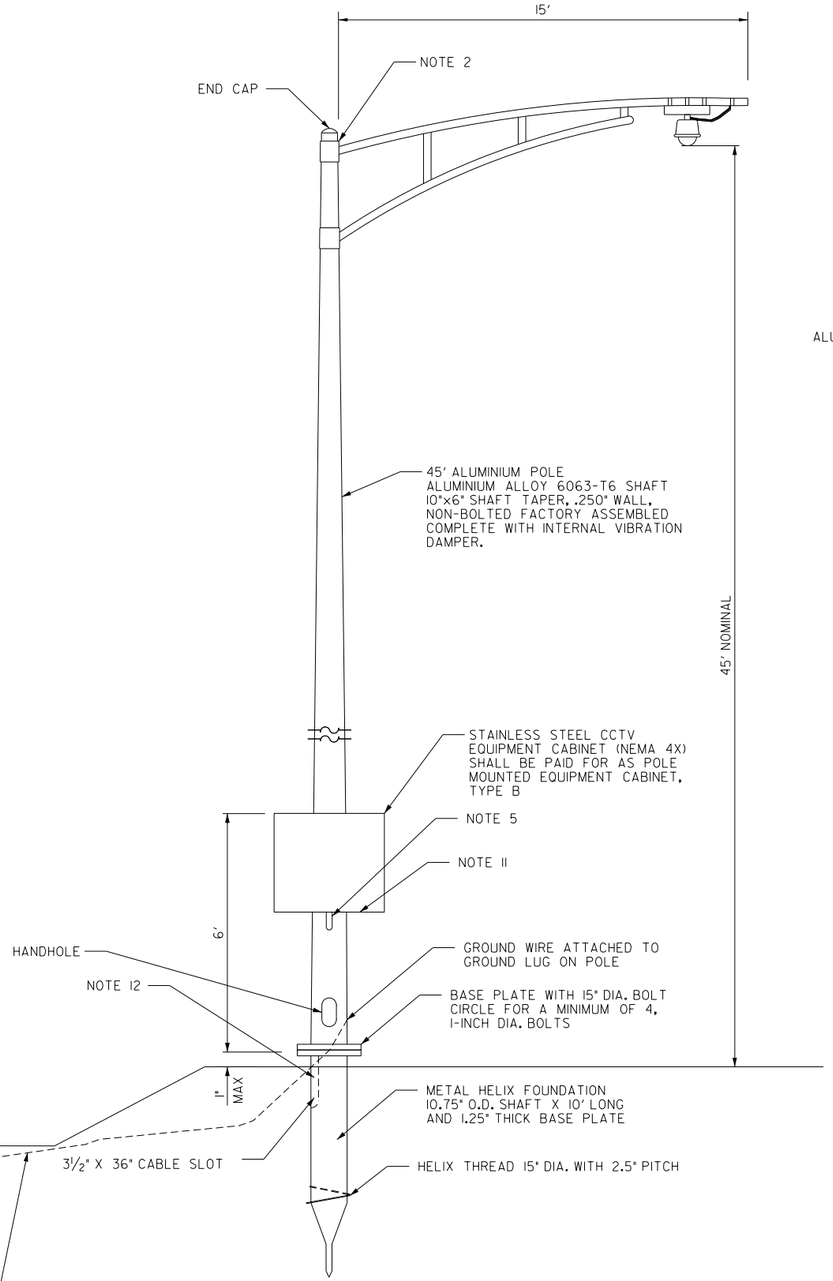

POLE MOUNTED CAMERA ASSEMBLY

NOT TO SCALE

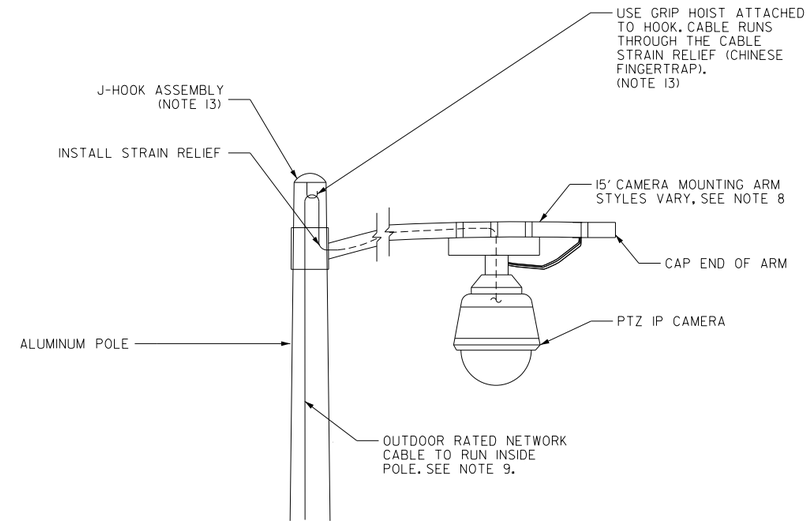

POLE TOP DETAIL

NOT TO SCALE

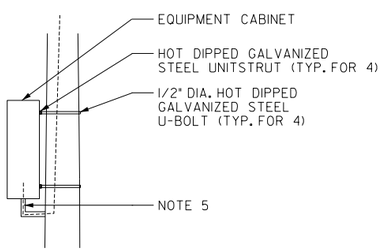

SIDE VIEW

NOTES:

1. CAMERA POLES SHOULD BE SHIELDED BY GUARDRAIL OR CURB AND GUTTER.
2. CONTRACTOR TO SEAL ENTRY WITH STEEL WOOL TO PREVENT RODENTS ENTERING.
3. ALL EQUIPMENT MUST BE CONNECTED TO A COMMON GROUND. ANY GROUND CABLES ROUTED INSIDE THE ENCLOSURE SHALL BE GREEN INSULATED TYPE RHW CONDUCTORS. ANY GROUND CONDUCTORS THAT ARE BURIED SHALL BE BARE COPPER TINNED. ANY GROUND CONNECTED TO THE EXTERNAL GROUND BUS BAR SHALL BE CADWELDED TO THE BUS BAR.
4. VERIFY POLE LOCATION AND CAMERA ORIENTATION WITH THE ENGINEER AND KDOT BEFORE INSTALLATION.
5. PROVIDE A 1-1/2" ALUMINUM CONDUIT NIPPLE WITH LB FITTING FOR ROUTING CAMERA CABLES INSIDE THE POLE TO THE EQUIPMENT ENCLOSURE. DRILL AND TAP POLE FOR THE CONDUIT NIPPLE. CABLE SLACK SHALL BE PULLED AND FASTENED WITHIN THE TOP OF THE POLE. PROPER CABLE STRAIN RELIEF SHALL BE INSTALLED AND APPROVED BY THE ENGINEER. ALL CABLE RUN INSIDE THE POLE SHALL NOT HANG BELOW THE TOP OF THE HANDHOLE COVER ON THE POLE.
6. ALL CONDUITS ENTERING THE ENCLOSURE SHALL BE SEALED WITH DUCT SEAL PUTTY (RAINBOW TECHNOLOGY OR EQUIVALENT) TO PREVENT RODENTS OR INSECTS FROM ENTERING THE ENCLOSURE. THE LB FITTING FROM THE POLE TO THE ENCLOSURE SHALL BE SEALED ON THE POLE SIDE ALONG WITH THE ENCLOSURE SIDE.
7. CONTRACTOR TO PROVIDE ALL POWER, COMMUNICATIONS AND GROUND WIRING REQUIRED FOR SYSTEM OPERATION. WORK IS SHALL BE INCLUDED IN THE PTZ CAMERA SYSTEM INSTALLATION.
8. CONTRACTOR TO SEAL THE CAMERA HOUSING PER THE MANUFACTURERS RECOMMENDATION USING RECTORSEAL DUCT SEAL. SEE SPECIFIC MANUFACTURER INSTRUCTIONS FOR MORE DETAILS. CONTRACTOR TO SECURE, WITH A TIE-WRAP, A ULINE S-3902 DESICCANT PACK INSIDE THE CAMERA HOUSING TO ABSORB ANY MOISTURE.
9. ALL CABLING (INCLUDING CABLING INSIDE THE ENCLOSURE) SHALL BE OUTDOOR RATED.
10. GROUND ROD SHALL BE PLACED A MINIMUM OF 10' FROM THE FOUNDATION. A GROUND WELL SHALL BE INCLUDED TO PERMIT ACCESS TO THE GROUND ROD CONNECTION. CONNECTION TO THE GROUND BUS BAR AND THE GROUND ROD SHALL BE CADWELD.
11. UPON COMPLETION OF INSTALLATION, ALL OPENINGS SHALL BE FILLED WITH STEEL WOOL AND SPRAY FOAM SEALANT TO SEAL GAPS AND CRACKS, FOR RODENT PROTECTION. WORK IS INCIDENTAL TO CABINET INSTALLATION.
12. A FLAT STEEL MESH PANEL ALONG WITH A COMMERCIALLY AVAILABLE HYDROPHOBIC LOW DENSITY COMPOSITE BACKFILL MATERIAL (KNOW AS Q-SET 250) SHALL BE INSTALLED BETWEEN THE ANCHOR BASE AND THE POLE TO PREVENT THE ENTRY OF RODENTS INTO THE POLE. SEE SPECIAL PROVISIONS FOR MORE DETAILS.
13. THE J-HOOK SHALL BE WELDED IN PLACE TO THE SIDE OF THE POLE, NEAR THE TOP OF THE POLE. THE CONTRACTOR SHALL PROVIDE A CUSTOM FLAT TOP POLE CAP THAT WILL FIT THE POLE TOP WITH THE J-HOOK WELDED TO THE SIDE. THE POLE CAP SHALL BE SECURED TO THE POLE BY DRILLING AND INSERTING SET SCREWS.

FILE NAME = G:\CHI3\0109\Road\Sheets - B2 Contract\20131894-SHT-DETAIL-CAMERA.dgn

TranSystems

USER NAME = mbmcwhorter	DESIGNED - BSH	REVISED -	
	DRAWN - MLB	REVISED -	
PLOT SCALE = 100.0000 ' / in.	CHECKED - MFD	REVISED -	
PLOT DATE = 9/25/2017	DATE - 8/7/2017	REVISED -	

STATE OF ILLINOIS
DEPARTMENT OF TRANSPORTATION

POLE MOUNTED CAMERA ASSEMBLY

SCALE: N.T.S. | SHEET 354 OF 611 SHEETS

F.A.U. RTE.	SECTION	COUNTY	TOTAL SHEETS	SHEET NO.
2298	16-00215-11-PV	KANE	611	354
		CONTRACT NO. 61E05		

FED. ROAD DIST. NO. 1 | ILLINOIS | FED. AID PROJECT

SYMBOL LIST

30A	NON-FUSIBLE HORSEPOWER RATED MOTOR DISCONNECT SWITCH-600V., 3PH,3W. "30A" DENOTES 30 AMPERES
30A/20	FUSIBLE DISCONNECT SWITCH, 600V., 3PH,3W, EXCEPT AS NOTED. " 20" DENOTES FUSE SIZE. "30A" DENOTES SWITCH RATING.
30 KVA T	TRANSFORMER 480V-208/120, 3PH, 4W. UNLESS OTHERWISE INDICATED. "30 KVA" DENOTES RATING
1	LEGEND NUMBER FOR CONDUIT AND CABLE. SEE CONDUIT/CABLE SCHEDULE, SHEET E-1. "1" DENOTES LEGEND NUMBER.
30/3P	CIRCUIT BREAKER "30" DENOTES 30 AMPERES, "3P" DENOTES 3 POLES
	CONDUIT UP
	CONDUIT DOWN
1 / E-4	DETAIL NUMBER- 1 SHEET NUMBER- E-4
1	GROUND ROD
	NEW EQUIPMENT
E	UNDERGROUND CONDUIT (QUANTITY AND SIZE AS SHOWN ON PLANS)
HH	HAND HOLE
	UTILITY POLE
A	AERIAL CABLE
M	UTILITY METER
PC	PHOTOCELL LIGHTING CONTROL
	CURRENT TRANSFORMER (C/T)
	TRANSFORMER
	LIGHT POLE WITH MAST ARM AND FIXTURE

ABBREVIATIONS

A, AMP	AMMETER OR AMPERE
AC	ALTERNATING CURRENT
A/C	AERIAL CABLE
AF	CIRCUIT BREAKER FRAME SIZE (AMPERES)
AS	AMMETER SWITCH
AT	CIRCUIT BREAKER TRIP RATING (AMPERES)
AWG	AMERICAN WIRE GAUGE
BKR	BREAKER
C	CONDUIT
CKT	CIRCUIT
COMED	COMMONWEALTH EDISON CO.
CT	CONTROL TRANSFORMER
CTR	CONTACTOR
DEG	DEGREE
DISC. SW	DISCONNECT SWITCH
EA	EACH
EQ	EQUAL
E, EXIST	EXISTING
G	GROUNDING WIRE IN CONDUIT, EXPOSED WHERE SO INDICATED ON PLANS.
GFI	GROUND FAULT INTERRUPTER
GRD	GROUND
GRC	GALVANIZED RIGID STEEL CONDUIT
GRC PVC	GALVANIZED RIGID STEEL PVC COATED CONDUIT
HH	HAND HOLE
IL	INDICATING LIGHT
JB	JUNCTION BOX
KAIC	KILO AMP INTERRUPTING CURRENT
KCMIL	KILO CIRCULAR MIL
LC	LIGHTING CONTACTOR
MH	METAL HALIDE
MLO	MAIN LUG ONLY
NC	NORMALLY CLOSED
NO	NUMBER
PB	PUSHBUTTON
PNL	PANEL
PH	PHASE
SS	STAINLESS STEEL
UNO	UNLESS NOTED OTHERWISE

SUMMARY OF QUANTITIES

ITEM CODE	DESCRIPTION	UNIT	QUANTITY
20800150	TRENCH BACKFILL	CU YD	1235
80500010	SERVICE INSTALLATION - GROUND MOUNTED	EACH	1
81028320	UNDERGROUND CONDUIT, PVC, 1" DIA.	FOOT	2982
81028340	UNDERGROUND CONDUIT, PVC, 1½" DIA.	FOOT	30
81028370	UNDERGROUND CONDUIT, PVC, 3" DIA.	FOOT	30
81028380	UNDERGROUND CONDUIT, PVC, 3½" DIA.	FOOT	960
81028390	UNDERGROUND CONDUIT, PVC, 4" DIA.	FOOT	335
81400200	HEAVY-DUTY HANDHOLE	EACH	8
84200600	REMOVAL OF LIGHTING UNIT, NO SALVAGE	EACH	7
81702100	ELECTRIC CABLE IN CONDUIT, 600V (XLP-TYPE USE) 1/C NO. 12	FOOT	100
81702120	ELECTRIC CABLE IN CONDUIT, 600V (XLP-TYPE USE) 1/C NO. 8	FOOT	5165
81702130	ELECTRIC CABLE IN CONDUIT, 600V (XLP-TYPE USE) 1/C NO. 6	FOOT	10470
81702150	ELECTRIC CABLE IN CONDUIT, 600V (XLP-TYPE USE) 1/C NO. 2	FOOT	1080
81702160	ELECTRIC CABLE IN CONDUIT, 600V (XLP-TYPE USE) 1/C NO. 1/0	FOOT	40
81702200	ELECTRIC CABLE IN CONDUIT, 600V (XLP-TYPE USE) 1/C 250 MCM	FOOT	3840
81702230	ELECTRIC CABLE IN CONDUIT, 600V (XLP-TYPE USE) 1/C 500 MCM	FOOT	150
X1400202	LUMINAIRE (SPECIAL)	EACH	4
X1400211	LIGHT POLE, SPECIAL, 30"	EACH	3
X1400238	LUMINAIRES, LED, SPECIAL	EACH	14
X8250505	LIGHTING CONTROLLER, SPECIAL	EACH	1
X8300001	LIGHT POLE, SPECIAL	EACH	14
X8360210	LIGHT POLE FOUNDATION, 24" DIAMETER, SPECIAL	EACH	14

GENERAL ELECTRICAL NOTES

1. LOCATIONS OF EQUIPMENT SHOWN ARE APPROXIMATE. CONTRACTOR TO COORDINATE LOCATION OF ALL EQUIPMENT IN THE FIELD WITH OTHER EQUIPMENT PRIOR TO INSTALLATION.
2. ALL CONDUIT ROUTING SHOWN IS DIAGRAMMATIC AND IS SHOWN ONLY FOR GENERAL GUIDANCE FOR THE CONTRACTOR IN SUBMITTING BIDS AND IS NOT TO BE CONSTRUED AS FINAL EITHER AS TO ARRANGEMENT OR QUANTITY REQUIRED. THE SIZE AND NUMBER OF CONDUITS NEEDED TO BE DETERMINED BY THE CONTRACTOR TO ACHIEVE THE OPERATIONAL REQUIREMENT OF ALL SYSTEMS, AND AS GENERAL GUIDANCE FOR DEVELOPING OF FINAL DETAILED WORKING (SHOP DRAWINGS). ALL WORKING DRAWINGS ARE SUBJECT TO APPROVAL BY THE ENGINEER. ONLY APPROVED SHOP DRAWINGS TO BE USED FOR FIELD INSTALLATION.
3. ALL NEW CONDUITS, FITTINGS AND HARDWARE INSTALLED IN EXPOSED OUTDOOR AREAS TO BE GRC. ALL PULLBOXES AND JUNCTION BOXES IN OUTDOOR AREAS TO BE NEMA TYPE 4X, AND CORROSION RESISTANT. ALL CONDUIT INSTALLED UNDERGROUND TO BE PVC SCHEDULE 80.
4. MINIMUM CONDUIT SIZE TO BE 3/4" UNLESS OTHERWISE INDICATED. CONDUIT FILL NOT TO EXCEED 40%.
5. ALL CONDUIT INSTALLED EXPOSED IN FINISHED AREAS OR ON EXTERIOR, TO BE PAINTED TO MATCH SURROUNDING SURFACES.
6. ALL WORK TO COMPLY WITH THE KANE COUNTY AND KANE COUNTY FOREST PRESERVE CODE AND IDOT STANDARDS, AND ALL ASSOCIATED AMENDMENTS.
7. ALL MATERIALS RELATED TO LIGHTING SYSTEMS TO BE FURNISHED BY THE CONTRACTOR. CONTRACTOR TO INSTALL THE LIGHTING, INCLUDING FIXTURES, CONDUIT AND CONDUCTORS.
8. ALL EMPTY CONDUITS TO BE PROVIDED WITH NYLON PULL CORD WITH THREE FEET PIGTAIL AT BOTH ENDS OF THE CONDUIT.
9. EXISTING ITEMS NOTED TO REMAIN TO BE LEFT IN PLACE AND IN OPERATION.
10. ALL TRENCHING CAUSED BY NEW WORK TO BE BACKFILLED AND FINISHED TO MATCH EXISTING SURROUNDING.
11. CONTRACTOR TO PROVIDE SHOP DRAWING SUBMITTALS FOR REVIEW AND APPROVAL, INCLUDING BUT NOT LIMITED TO LIGHT FIXTURE DATA SHEETS, LIGHTING PHOTOMETRIC CALCULATIONS, INSTALLATION DETAILS, CONDUIT LAYOUT, AND NAVIGATION LIGHTING DATA SHEETS.
12. CONTRACTOR TO PROVIDE TEMPORARY POWER AND LIGHTING AS REQUIRED DURING CONSTRUCTION. DISCONNECT AND REMOVE TEMPORARY POWER AND LIGHTING WHEN CONSTRUCTION IS COMPLETED.

AAA ENGINEERING
DBE CERTIFIED
4323 W. IRVING PARK RD., SUITE 200
CHICAGO, IL 60641
P: 773-657-3300 F: 773-657-3330
http://www.AAAEngineering.net/

Bollinger, Lach & Associates, Inc.
ITASCA, ILLINOIS

USER NAME = cmartin	DESIGNED -	REVISED -
	DRAWN -	REVISED -
PLOT SCALE = 2:0.0000 ':' / in.	CHECKED -	REVISED -
PLOT DATE = 8/4/2017	DATE - 08/07/2017	REVISED -

STATE OF ILLINOIS
DEPARTMENT OF TRANSPORTATION

RAGING BUFFALO SKI SLOPE
GENERAL ELECTRICAL NOTES, ABBREVIATIONS, SYMBOL LIST AND SUMMARY OF QUANTITIES

SCALE: NONE | SHEET 1 OF 10 SHEETS | STA. TO STA.

F.A.U. RTE.	SECTION	COUNTY	TOTAL SHEETS	SHEET NO.
2298	16-00215-11-PV	KANE	611	355

CONTRACT NO. 61E05

ILLINOIS FED. AID PROJECT

FILE NAME = M:\4690 Raging Buffalo Ski Resort\04 - CADD Files\04 - Sheet Files\E-1.dgn

NOTES

1. REFER TO SHEET E-1 FOR SYMBOL LIST, ABBREVIATIONS AND GENERAL NOTES.
2. REMOVE EXISTING WOODPOLE AND POLE MOUNTED PARKING LOT LIGHT FIXTURE.
3. REMOVE EXISTING AERIAL CABLE.
4. EXISTING CABLE SPLICE, REPAIR SPLICE AFTER REMOVAL OF AERIAL CABLE. COST OF CABLE SPLICE REPAIR TO BE INCIDENTAL TO THE COST OF POLE AND CABLE REMOVAL.
5. DISCONNECT AND REMOVE ALL EXISTING SERVICE ENTRANCE ELECTRICAL EQUIPMENT CONNECTED TO EXISTING INCOMING COMED ELECTRICAL SERVICE.

AAA ENGINEERING
DBE CERTIFIED
4323 W. IRVING PARK RD., SUITE 200
CHICAGO, IL 60641
P: 773-657-3300 F: 773-657-3330
http://www.AAAEngineering.net/

Bollinger, Lach & Associates, Inc.
ITASCA, ILLINOIS

USER NAME = cmartin	DESIGNED - EJM	REVISED -	
	DRAWN - HR	REVISED -	
PLOT SCALE = 60:0.0000 ':' / in.	CHECKED - JCM	REVISED -	
PLOT DATE = 8/4/2017	DATE - 08/07/2017	REVISED -	

STATE OF ILLINOIS
DEPARTMENT OF TRANSPORTATION

RAGING BUFFALO SKI SLOPE
EXISTING ELECTRICAL SITE PLAN

SCALE: 1"=30' | SHEET 2 OF 10 SHEETS | STA. TO STA.

F.A.U. RTE.	SECTION	COUNTY	TOTAL SHEETS	SHEET NO.
2298	16-00215-11-PV	KANE	611	356

CONTRACT NO. 61E05

ILLINOIS FED. AID PROJECT

E-2

FILE NAME = M:\4690 Raging Buffalo Ski Resort\04 - CADD Files\04 - Sheet Files\E-2.dgn

N

NOTES

1. REFER TO SHEET E-1 FOR SYMBOL LIST, ABBREVIATIONS AND GENERAL NOTES.
2. EMPTY 4" PVC SCH 80 FOR FUTURE BUILDING ELECTRIC SERVICE. STUB CONDUIT AT BOTH ENDS AND TERMINATE IN HANDHOLES.
3. NEW 30'-0" WOOD UTILITY POLE WITH FLOOD LIGHTS TO ILLUMINATE TOP OF SKI HILL. SEE LIGHTING FIXTURE SCHEDULE ON SHEET E-6.
4. REFER TO SHEET E-6 FOR CABLE AND CONDUIT SCHEDULE.
5. COIL 4 #250 kcmil CABLES IN PROPOSED HANDHOLE AT HILL TOP FOR FUTURE USE. CONTINUE 2 #6 & 1 #8 GRD CABLES TO FEED FLOOD LIGHTS FROM PROPOSED HANDHOLE.
6. SEE SHEET E-4 FOR CONTINUATION TO MAIN PARKING LOT LIGHT FIXTURES.
7. SEE SHEET E-5 FOR CONTINUATION TO SOUTH PARKING LOT LIGHT FIXTURES.

AAA ENGINEERING
DBE CERTIFIED
4323 W. IRVING PARK RD., SUITE 200
CHICAGO, IL 60641
P: 773-657-3300 F: 773-657-3330
http://www.AAAEngineering.net/

Bollinger, Lach & Associates, Inc.
ITASCA, ILLINOIS

USER NAME = cmartin	DESIGNED - EJM	REVISED -	
	DRAWN - HR	REVISED -	
PLOT SCALE = 160.0000 ' / in.	CHECKED - JCM	REVISED -	
PLOT DATE = 8/4/2017	DATE - 08/07/2017	REVISED -	

STATE OF ILLINOIS
DEPARTMENT OF TRANSPORTATION

RAGING BUFFALO SKI SLOPE
PROPOSED ELECTRICAL SITE & HILL TOP LIGHTING PLAN

SCALE: 1"=80' | SHEET 3 OF 10 SHEETS | STA. TO STA.

F.A.U. RTE.	SECTION	COUNTY	TOTAL SHEETS	SHEET NO.
2298	16-00215-11-PV	KANE	611	357
		CONTRACT NO. 61E05		
		ILLINOIS FED. AID PROJECT		

E-3

FILE NAME = M:\4690 Raging Buffalo Ski Resort\04 - CADD Files\04 - Sheet Files\E-3.dgn

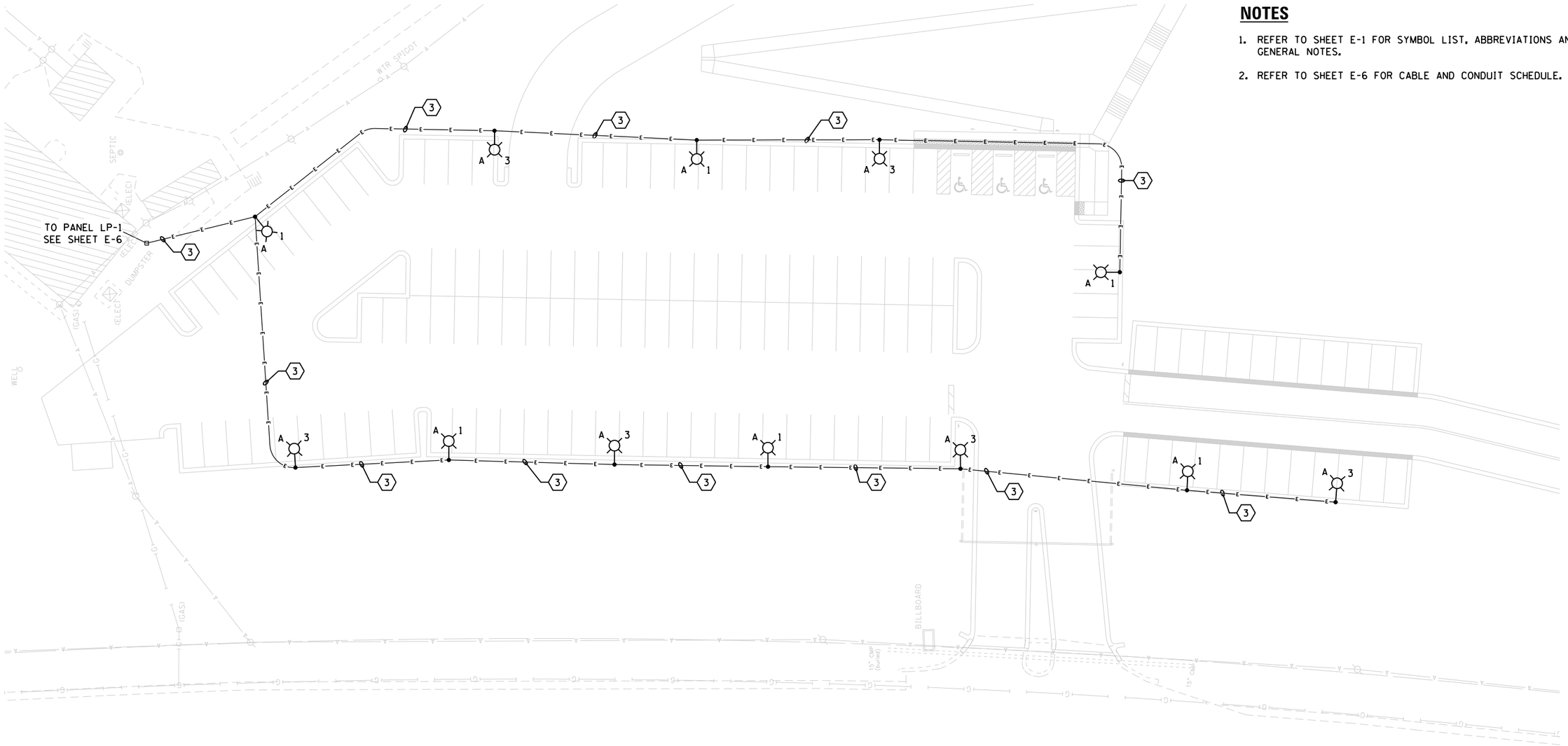

NOTES

1. REFER TO SHEET E-1 FOR SYMBOL LIST, ABBREVIATIONS AND GENERAL NOTES.
2. REFER TO SHEET E-6 FOR CABLE AND CONDUIT SCHEDULE.

AAA ENGINEERING
DBE CERTIFIED
4323 W. IRVING PARK RD., SUITE 200
CHICAGO, IL 60641
P: 773-657-3300 F: 773-657-3330
http://www.AAAEngineering.net/

Bollinger, Lach & Associates, Inc.
ITASCA, ILLINOIS

USER NAME = cmartin	DESIGNED - EJM	REVISED -	
	DRAWN - HR	REVISED -	
PLOT SCALE = 40:0.0000 ':' / in.	CHECKED - JCM	REVISED -	
PLOT DATE = 8/4/2017	DATE - 08/07/2017	REVISED -	

STATE OF ILLINOIS
DEPARTMENT OF TRANSPORTATION

RAGING BUFFALO SKI SLOPE
PROPOSED MAIN PARKING LOT ELECTRICAL PLAN

SCALE: 1"=20' | SHEET 4 OF 10 SHEETS | STA. TO STA.

F.A.U. RTE.	SECTION	COUNTY	TOTAL SHEETS	SHEET NO.
2298	16-00215-11-PV	KANE	611	358

CONTRACT NO. 61E05

ILLINOIS FED. AID PROJECT

E-4

FILE NAME = M:\4690 Raging Buffalo Ski Resort\04 - CADD Files\04 - Sheet Files\E-4.dgn

NOTES

1. REFER TO SHEET E-1 FOR SYMBOL LIST, ABBREVIATIONS AND GENERAL NOTES.
2. REFER TO SHEET E-6 FOR CABLE AND CONDUIT SCHEDULE.
3. ROUTE CONDUIT AND CABLES THROUGH PROPOSED HANDHOLE LOCATED NEAR EXISTING BUILDING TO PANEL LP-1. REFER TO SHEET E-3 FOR LOCATION. PROVIDE INTERMEDIATE HANDHOLES IN RUN AS REQUIRED PER ELECTRICAL CODES.

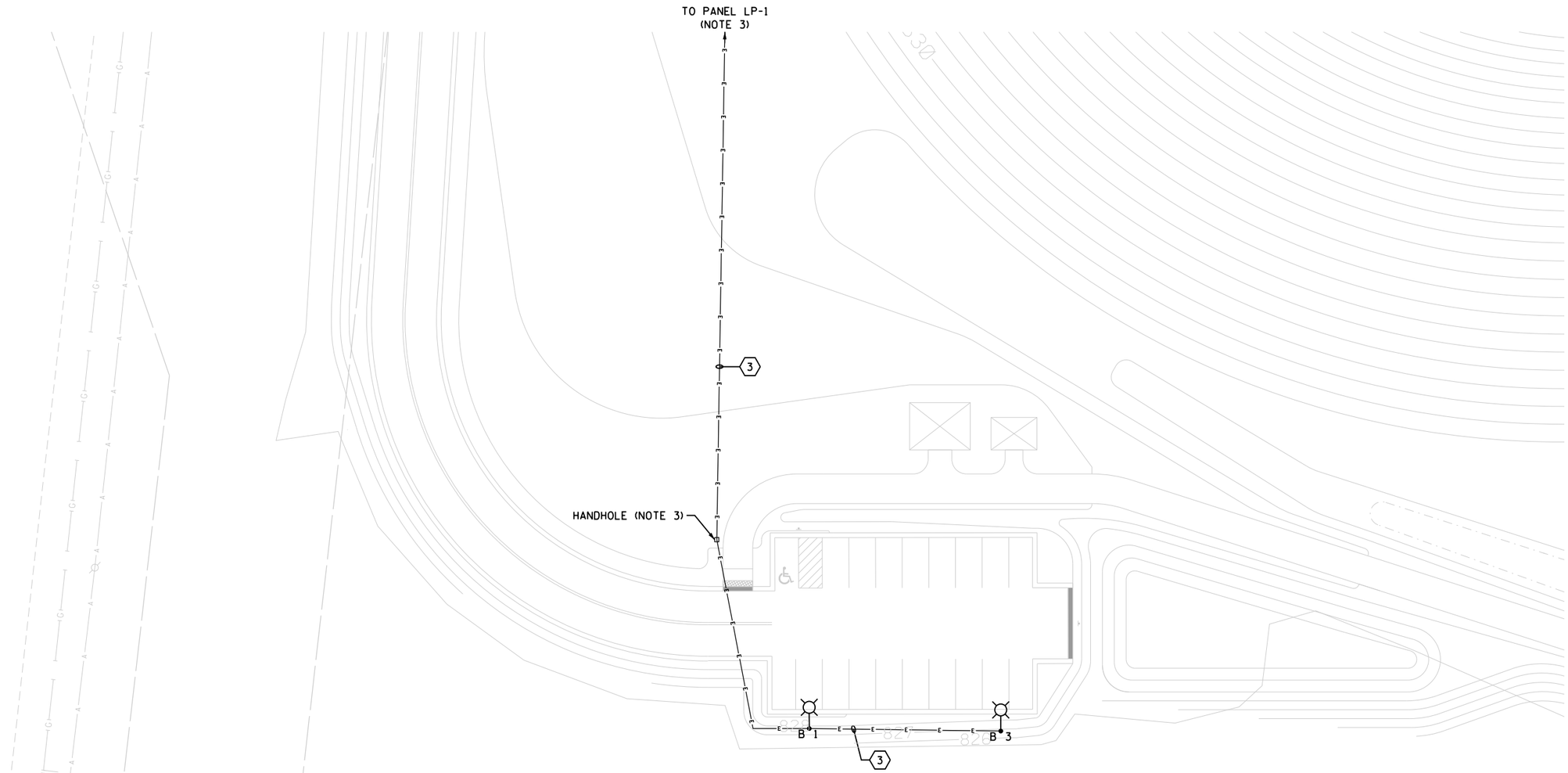

AAA ENGINEERING
DBE CERTIFIED
4323 W. IRVING PARK RD., SUITE 200
CHICAGO, IL 60641
P: 773-657-3300 F: 773-657-3330
http://www.AAAEngineering.net/

Bollinger, Lach & Associates, Inc.
ITASCA, ILLINOIS

USER NAME = cmartin	DESIGNED - EJM	REVISED -	
	DRAWN - HR	REVISED -	
PLOT SCALE = 40.0000 ' / in.	CHECKED - JCM	REVISED -	
PLOT DATE = 8/4/2017	DATE - 08/07/2017	REVISED -	

STATE OF ILLINOIS
DEPARTMENT OF TRANSPORTATION

RAGING BUFFALO SKI SLOPE
PROPOSED SOUTH PARKING LOT ELECTRICAL PLAN

SCALE: 1"=20' | SHEET 5 OF 10 SHEETS | STA. TO STA.

F.A.U. RTE.	SECTION	COUNTY	TOTAL SHEETS	SHEET NO.
2298	16-00215-11-PV	KANE	611	359

CONTRACT NO. 61E05

ILLINOIS FED. AID PROJECT

E-5

FILE NAME = M:\4690 Raging Buffalo Ski Resort\04 - CADD Files\04 - Sheet Files\E-5.dgn

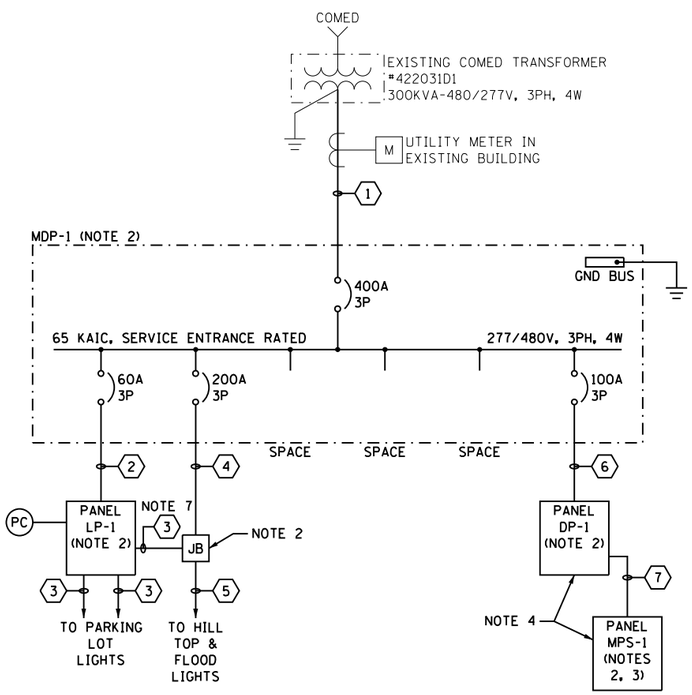

1 SINGLE LINE DIAGRAM

NOT TO SCALE

LIGHTING FIXTURE SCHEDULE

SYMBOL & TYPE	DESCRIPTION	WATTAGE	VOLTAGE	NOTES
A 1	RAB LIGHTING CAT #ALED4T150Y/480 A DENOTES FIXTURE TYPE (TYP) 1 DENOTES CIRCUIT NUMBER (TYP)	154	480	POLE MOUNT TYPE 4
B 1	RAB LIGHTING CAT #ALED3T150Y/480	154	480	POLE MOUNT TYPE 3
C 1	RAB LIGHTING CAT #FXLED300SFYB46/480	313	480	FLOOD 4x6

PANEL SCHEDULE

NOTE 5

NAME	VOLTAGE	MAIN	CIRCUIT BREAKERS	NOTES
MDP-1	277/480V, 3PH, 4W	400A, 3P BREAKER	(1) 200A, 3P (1) 100A, 3P (1) 60A, 3P 3 SPACES 100A EACH	SERVICE ENTRANCE RATED
LP-1	277/480V, 3PH, 4W	60A MLO	(4) 30A, 2P (24 SPACES TOTAL)	CONTACTOR CONTROLLED VIA PHOTOCELL
DP-1	277/480V, 3PH, 4W	100A MLO	(1) 40A, 3P (24 SPACES TOTAL)	

CABLE AND CONDUIT SCHEDULE

LEGEND	CABLE DESCRIPTION	CONDUIT SIZE (INCHES)	REMARKS
1	4 #500 kcmil, 1 #1/0 AWG GRD	4	-
2	4 #6 AWG, 1 #12 AWG GRD	1	NOTE 7
3	2 #6 AWG, 1 #8 AWG GRD	1	-
4	4 #250 kcmil, 1 #2 AWG GRD	3	NOTE 7
5	4 #250 kcmil, 2 #6 AWG, 1 #2 AWG GRD, 1 #8 AWG GRD	4	-
6	4 #2 AWG, 1 #8 AWG GRD	1½	NOTE 7
7	5 #8 AWG	1	NOTE 7
8	-	-	-
9	-	-	-
10	-	-	-

NOTES:

1. REFER TO SHEET E-1 FOR SYMBOL LIST, ABBREVIATIONS, AND GENERAL NOTES.
2. ALL PROPOSED EQUIPMENT IDENTIFIED BY THIS NOTE SHALL BE LOCATED WITHIN EXISTING BUILDING.
3. SQUARE D 22.5KVA MINI-POWER CENTER. 480V-120/208V, 3PH, 4W. PART #MPZB22T2F65K.
4. CONNECT EXISTING BUILDING SERVICES TO PANELS DP-1 AND MPS-1 TO MAINTAIN EXISTING OPERATIONS.
5. ALL PANEL BOARDS SHALL HAVE AN IC RATING OF 65 KAIC.
6. ALL WIRE AND CABLE TO HAVE 600V, XLP INSULATION.
7. CONDUIT TO BE SURFACE MOUNTED EXPOSED INSIDE EXISTING BUILDING.

AAA ENGINEERING
DBE CERTIFIED
4323 W. IRVING PARK RD., SUITE 200
CHICAGO, IL 60641
P: 773-657-3300 F: 773-657-3330
http://www.AAAEngineering.net/

Bollinger, Lach & Associates, Inc.
ITASCA, ILLINOIS

USER NAME = cmartin	DESIGNED - EJM	REVISED -
	DRAWN - HR	REVISED -
PLOT SCALE = 20.0000 ' / in.	CHECKED - JCM	REVISED -
PLOT DATE = 8/4/2017	DATE - 08/07/2017	REVISED -

STATE OF ILLINOIS
DEPARTMENT OF TRANSPORTATION

RAGING BUFFALO SKI SLOPE
ELECTRICAL SINGLE LINE DIAGRAM & SCHEDULES

SCALE: NTS | SHEET 6 OF 10 SHEETS | STA. TO STA.

F.A.U. RTE.	SECTION	COUNTY	TOTAL SHEETS	SHEET NO.
2298	16-00215-11-PV	KANE	611	360

CONTRACT NO. 61E05

ILLINOIS FED. AID PROJECT

E-6

FILE NAME = M:\4690 Raging Buffalo Ski Resort\04 - CADD Files\04 - Sheet Files\E-6.dgn

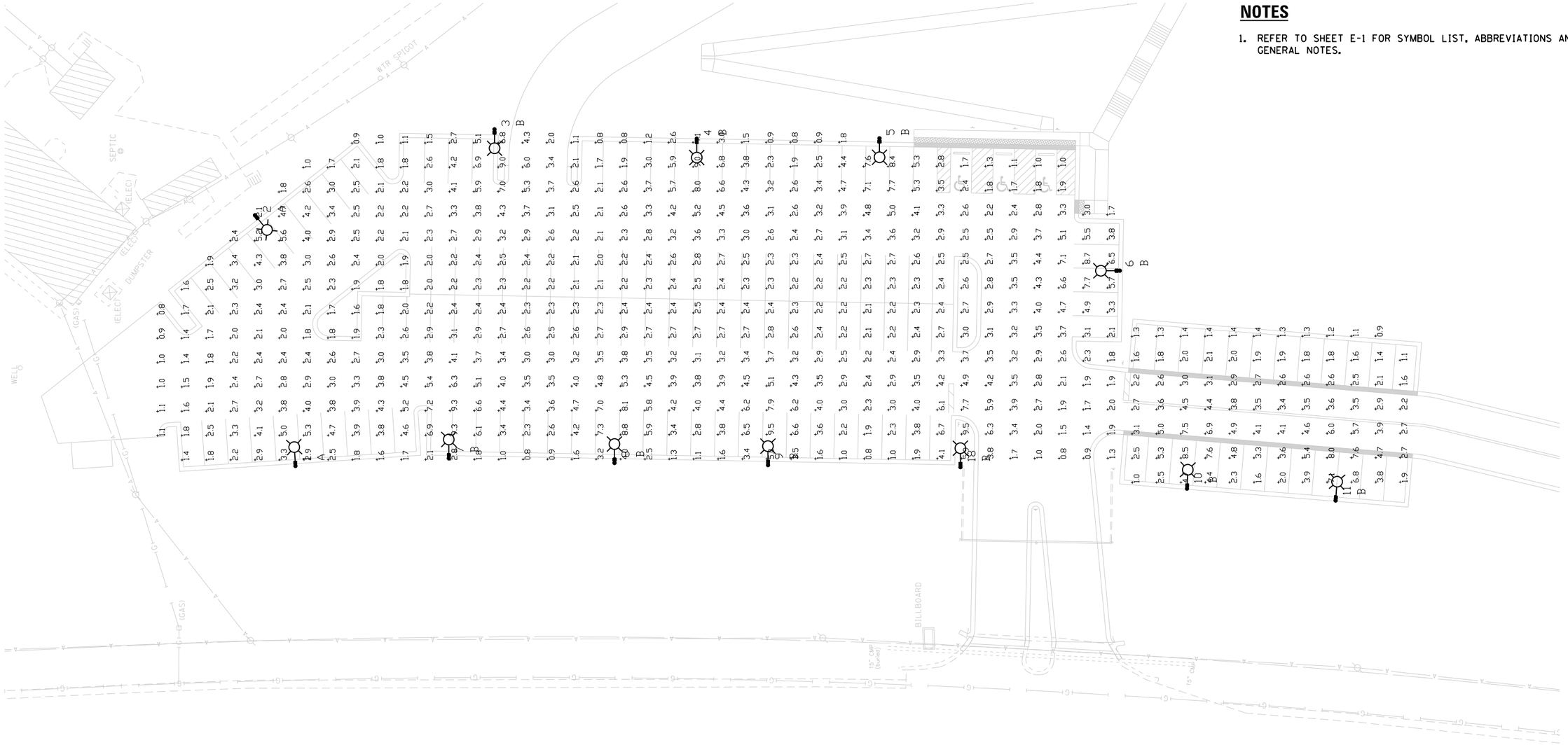

NOTES

1. REFER TO SHEET E-1 FOR SYMBOL LIST, ABBREVIATIONS AND GENERAL NOTES.

Luminaire Schedule						
Symbol	Qty	Label	Arrangement	Total Lamp Lumens	LLF	Description
	2	ALED3T150Y	SINGLE	N.A.	1.000	Pole Mount (Type 3)
	12	ALED4T150Y	SINGLE	N.A.	1.000	Pole Mount (Type 4)
	4	FXLED300SFYB46	SINGLE	N.A.	1.000	Flood 4x6

Calculation Summary							
Label	CalcType	Units	Avg	Max	Min	Avg/Min	Max/Min
CalcPts Parking Lot 1	Illuminance	Fc	3.19	9.5	0.8	3.99	11.88
CalcPts Parking Lot 2	Illuminance	Fc	3.13	7.8	0.9	3.48	8.67
CalcPts Ski Slope	Illuminance	Fc	0.48	13.4	0.0	N.A.	N.A.

AAA ENGINEERING
DBE CERTIFIED
4323 W. IRVING PARK RD., SUITE 200
CHICAGO, IL 60641
P: 773-657-3300 F: 773-657-3330
http://www.AAAEngineering.net/

Bollinger, Lach & Associates, Inc.
ITASCA, ILLINOIS

FILE NAME = M:\4698 Raging Buffalo Ski Resort\04 - CADD Files\04 - Sheet Files\E-7.dgn

USER NAME = cmartin	DESIGNED - EJM	REVISED -	
	DRAWN - HR	REVISED -	
PLOT SCALE = 40:0.0000 ':' / in.	CHECKED - JCM	REVISED -	
PLOT DATE = 8/4/2017	DATE - 08/07/2017	REVISED -	

STATE OF ILLINOIS
DEPARTMENT OF TRANSPORTATION

RAGING BUFFALO SKI SLOPE
PROPOSED MAIN PARKING LOT PHOTOMETRICS

SCALE: 1"=20' | SHEET 7 OF 10 SHEETS | STA. TO STA.

F.A.U. RTE.	SECTION	COUNTY	TOTAL SHEETS	SHEET NO.
2298	16-00215-11-PV	KANE	611	361

CONTRACT NO. 61E05

ILLINOIS FED. AID PROJECT

E-7

NOTES

1. REFER TO SHEET E-1 FOR SYMBOL LIST, ABBREVIATIONS AND GENERAL NOTES.

Luminaire Schedule						
Symbol	Qty	Label	Arrangement	Total Lamp Lumens	LLF	Description
	2	ALED3T150Y	SINGLE	N.A.	1.000	Pole Mount (Type 3)
	12	ALED4T150Y	SINGLE	N.A.	1.000	Pole Mount (Type 4)
	4	FXLED300SFYB46	SINGLE	N.A.	1.000	Flood 4x6

Calculation Summary							
Label	CalcType	Units	Avg	Max	Min	Avg/Min	Max/Min
CalcPts Parking Lot 1	Illuminance	Fc	3.19	9.5	0.8	3.99	11.88
CalcPts Parking Lot 2	Illuminance	Fc	3.13	7.8	0.9	3.48	8.67
CalcPts Ski Slope	Illuminance	Fc	0.48	13.4	0.0	N.A.	N.A.

AAA ENGINEERING
DBE CERTIFIED
4323 W. IRVING PARK RD., SUITE 200
CHICAGO, IL 60641
P: 773-657-3300 F: 773-657-3330
http://www.AAAEngineering.net/

Bollinger, Lach & Associates, Inc.
ITASCA, ILLINOIS

FILE NAME = M:\4698 Raging Buffalo Ski Resort\04 - CADD Files\04 - Sheet Files\E-8.dgn

USER NAME = cmartin	DESIGNED - EJM	REVISED -
	DRAWN - HR	REVISED -
PLOT SCALE = 80.0000 ' / in.	CHECKED - JCM	REVISED -
PLOT DATE = 8/4/2017	DATE - 08/07/2017	REVISED -

STATE OF ILLINOIS
DEPARTMENT OF TRANSPORTATION

RAGING BUFFALO SKI SLOPE
PROPOSED SKI SLOPE PHOTOMETRICS

SCALE: 1"=40' | SHEET 8 OF 10 SHEETS | STA. TO STA.

F.A.U. RTE.	SECTION	COUNTY	TOTAL SHEETS	SHEET NO.
2298	16-00215-11-PV	KANE	611	362

CONTRACT NO. 61E05

ILLINOIS FED. AID PROJECT

NOTES

1. REFER TO SHEET E-1 FOR SYMBOL LIST, ABBREVIATIONS AND GENERAL NOTES.

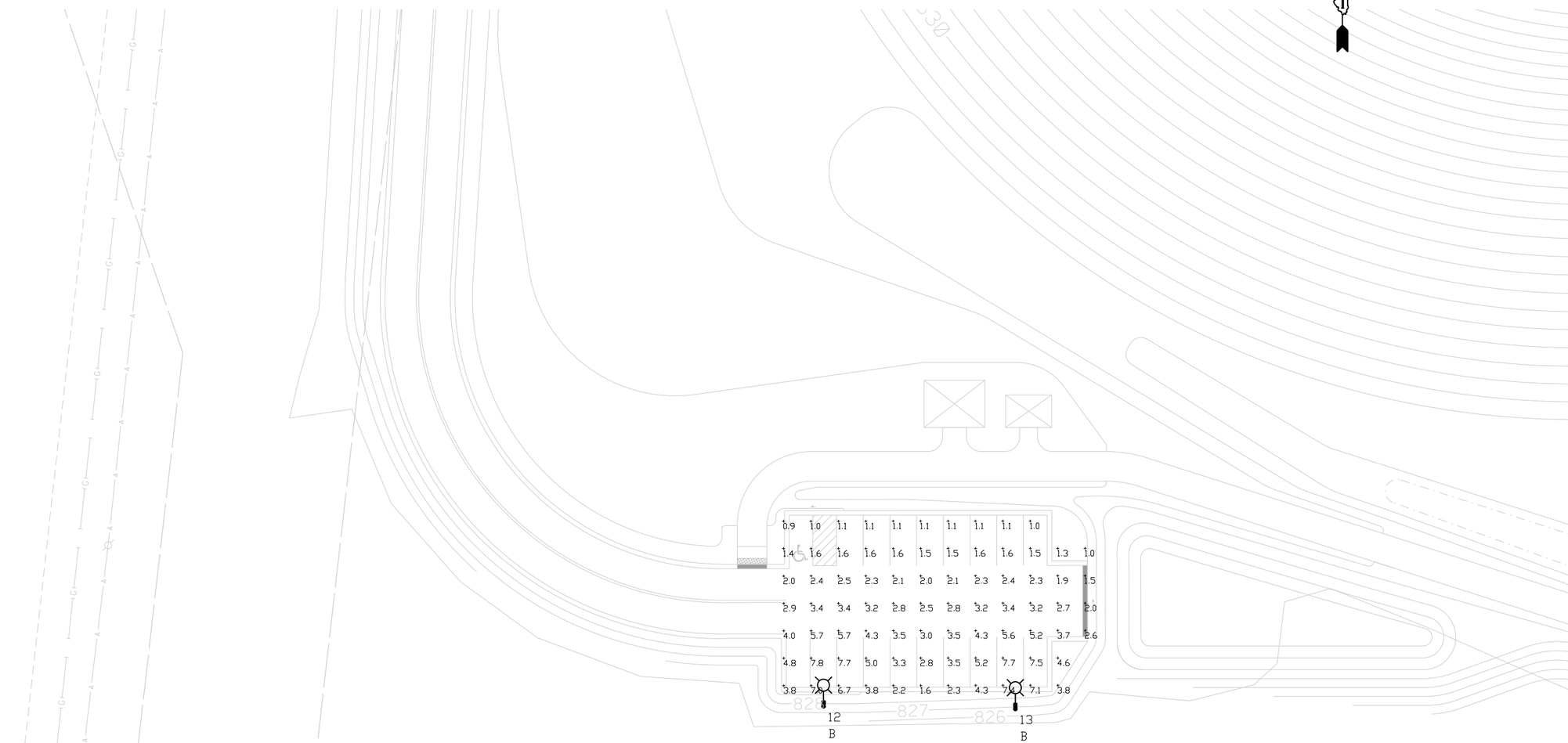

Luminaire Schedule						
Symbol	Qty	Label	Arrangement	Total Lamp Lumens	LLF	Description
	2	ALED3T150Y	SINGLE	N.A.	1.000	Pole Mount (Type 3)
	12	ALED4T150Y	SINGLE	N.A.	1.000	Pole Mount (Type 4)
	4	FXLED300SFYB46	SINGLE	N.A.	1.000	Flood 4x6

Calculation Summary							
Label	CalcType	Units	Avg	Max	Min	Avg/Min	Max/Min
CalcPts Parking Lot 1	Illuminance	Fc	3.19	9.5	0.8	3.99	11.88
CalcPts Parking Lot 2	Illuminance	Fc	3.13	7.8	0.9	3.48	8.67
CalcPts Ski Slope	Illuminance	Fc	0.48	13.4	0.0	N.A.	N.A.

AAA ENGINEERING
DBE CERTIFIED
4323 W. IRVING PARK RD., SUITE 200
CHICAGO, IL 60641
P: 773-657-3300 F: 773-657-3330
http://www.AAAEngineering.net/

Bollinger, Lach & Associates, Inc.
ITASCA, ILLINOIS

USER NAME = cmartin	DESIGNED - EJM	REVISED -	
	DRAWN - HR	REVISED -	
PLOT SCALE = 40.0000 ' / in.	CHECKED - JCM	REVISED -	
PLOT DATE = 8/4/2017	DATE - 08/07/2017	REVISED -	

STATE OF ILLINOIS
DEPARTMENT OF TRANSPORTATION

RAGING BUFFALO SKI SLOPE
PROPOSED SOUTH PARKING LOT PHOTOMETRICS

SCALE: 1"=20' | SHEET 9 OF 10 SHEETS | STA. TO STA.

F.A.U. RTE.	SECTION	COUNTY	TOTAL SHEETS	SHEET NO.
2298	16-00215-11-PV	KANE	611	363

CONTRACT NO. 61E05

ILLINOIS FED. AID PROJECT

E-9

FILE NAME = M:\4690 Raging Buffalo Ski Resort\04 - CADD Files\04 - Sheet Files\E-9.dgn

NOTES:

1. CIRCUIT GROUND CONDUCTOR, GROUND ROD, AND GROUND CONDUCTOR TO BE BONDED TOGETHER AT POLE GROUND CLAMP.

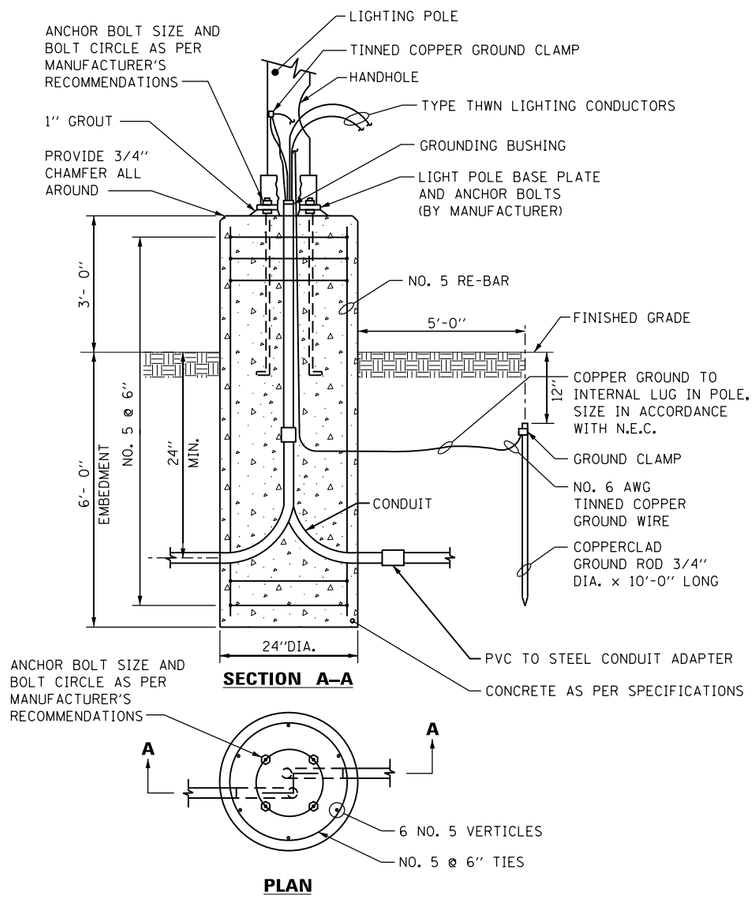

1 FOR TYPICAL EXTENDED LIGHTING FOUNDATION PARKING LOT TO 30'

NOT TO SCALE

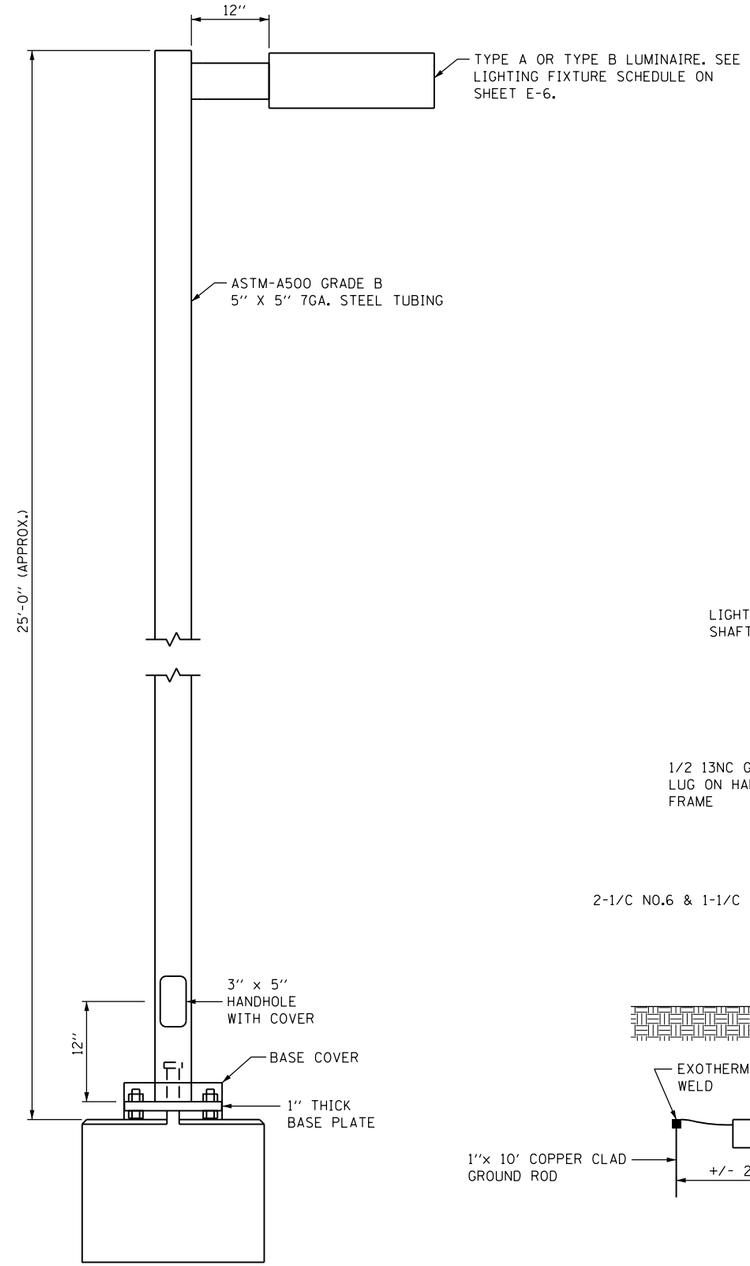

2 SQUARE STEEL LIGHT POLE

NOT TO SCALE

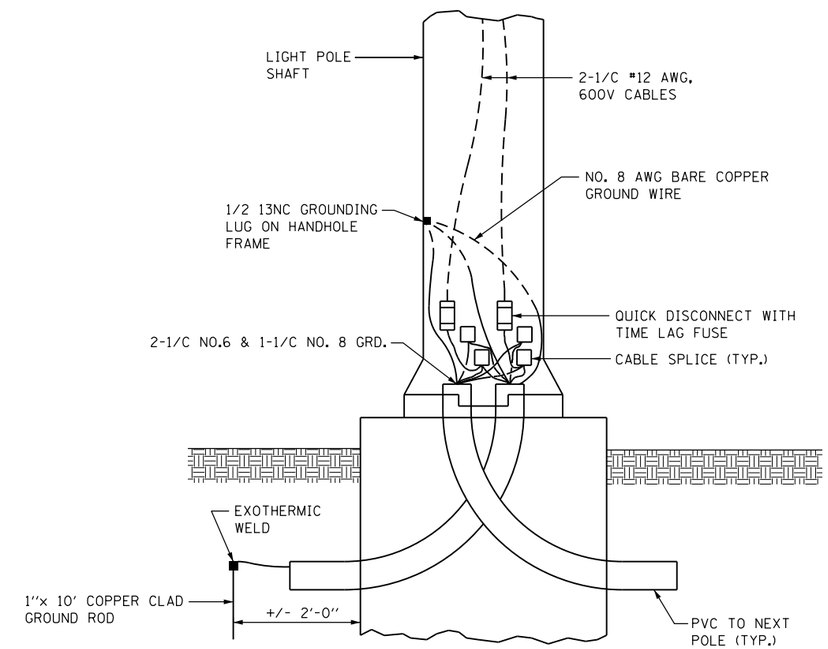

3 POLE BASE WIRING

NOT TO SCALE

AAA ENGINEERING
DBE CERTIFIED
4323 W. IRVING PARK RD., SUITE 200
CHICAGO, IL 60641
P: 773-657-3300 F: 773-657-3330
http://www.AAAEngineering.net/

Bollinger, Lach & Associates, Inc.
ITASCA, ILLINOIS

USER NAME = cmartin	DESIGNED - EJM	REVISED -
	DRAWN - HR	REVISED -
PLOT SCALE = 2.0000 ' / in.	CHECKED - JCM	REVISED -
PLOT DATE = 8/4/2017	DATE - 08/07/2017	REVISED -

STATE OF ILLINOIS
DEPARTMENT OF TRANSPORTATION

RAGING BUFFALO SKI SLOPE
LIGHT POLE DETAILS

SCALE: NTS | SHEET 10 OF 10 SHEETS | STA. TO STA.

F.A.U. RTE.	SECTION	COUNTY	TOTAL SHEETS	SHEET NO.
2298	16-00215-11-PV	KANE	611	364
		CONTRACT NO. 61E05		
		ILLINOIS FED. AID PROJECT		

E-10

FILE NAME = M:\4690 Raging Buffalo Ski Resort\04 - CADD Files\04 - Sheet Files\E-10.dgn

NOTES:

1) SEE STANDARD 630301 FOR TRAFFIC BARRIER TERMINAL TYPE 1, SPECIAL (TANGENT).

2) TRAFFIC BARRIER TERMINAL TYPE 1, SPECIAL, SHALL NOT BE TAPERED. IT SHALL REMAIN PARALLEL TO THE ROAD.

3) SEE STANDARD 631011 FOR TRAFFIC BARRIER TERMINAL, TYPE 2

4) SEE STANDARD 630001 FOR STEEL PLATE BEAM GUARDRAIL, TYPE B

5) POSTS 1-17 SHALL FOLLOW STANDARD 630001 FOR POST LENGTH AND EMBEDMENT.

6) POSTS 1-9 SHALL BE SPACED 1'-6¾" CENTER POST-CENTER POST

7) POSTS 10-17 SHALL BE SPACED 3'-1½" CENTER POST-CENTER POST

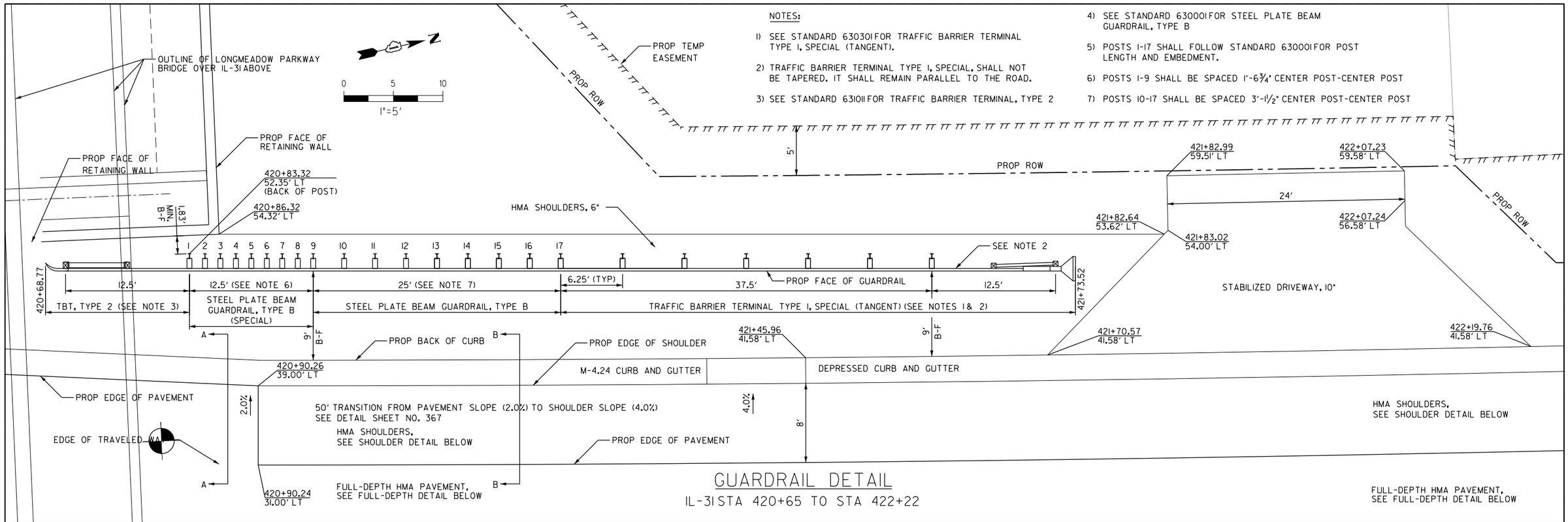

GUARDRAIL DETAIL

IL-31 STA 420+65 TO STA 422+22

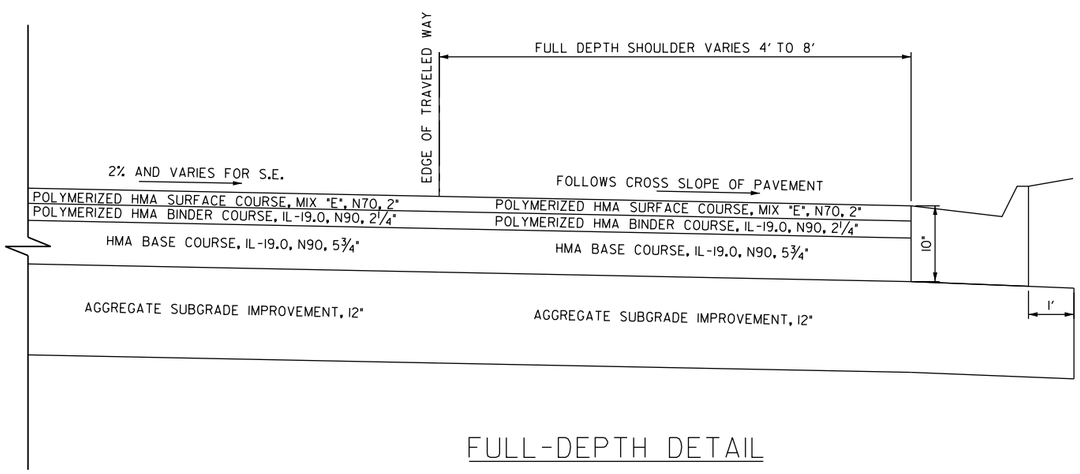

FULL-DEPTH DETAIL

SECTION A-A

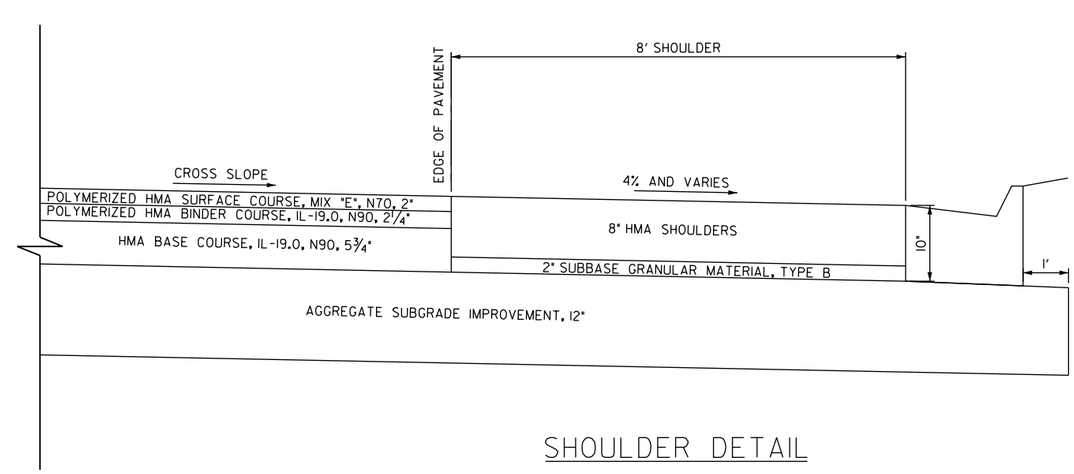

SHOULDER DETAIL

SECTION B-B

FILE NAME = G:\CHI3\0189\Road\Sheets - B2 Contract\20131894-SHT-DETAIL-GUARDRAIL.dgn

TranSystems	USER NAME = mbmcwhorter	DESIGNED - BSH	REVISED -
		DRAWN - MLB	REVISED -
	PLOT SCALE = 10.0000 ' / in.	CHECKED - MFD	REVISED -
	PLOT DATE = 9/25/2017	DATE - 8/7/2017	REVISED -

STATE OF ILLINOIS
DEPARTMENT OF TRANSPORTATION

ILLINOIS ROUTE 31
GUARDRAIL AND PAVEMENT DETAIL

SCALE: 1" = 5' | SHEET 365 OF 611 SHEETS

F.A.U. RTE.	SECTION	COUNTY	TOTAL SHEETS	SHEET NO.
2298	16-00215-11-PV	KANE	611	365
		CONTRACT NO. 61E05		

FED. ROAD DIST. NO. 1 | ILLINOIS | FED. AID PROJECT

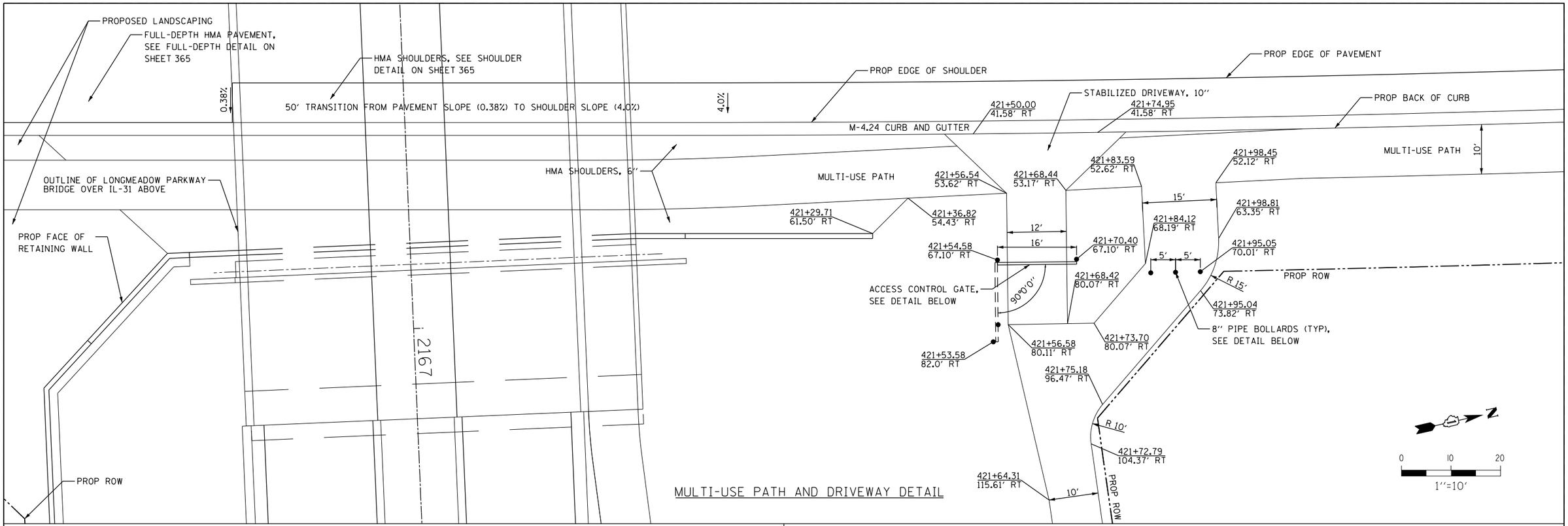

MULTI-USE PATH AND DRIVEWAY DETAIL

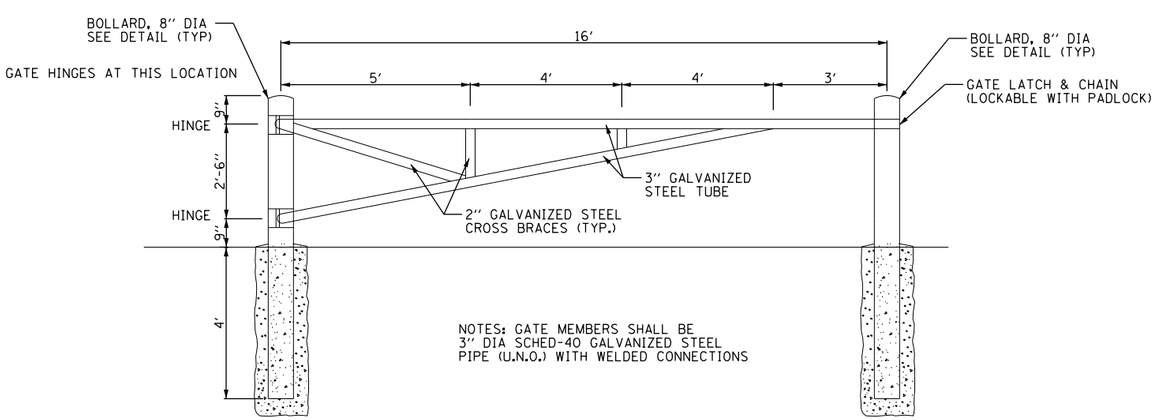

TUBULAR STEEL GATE

NOT TO SCALE

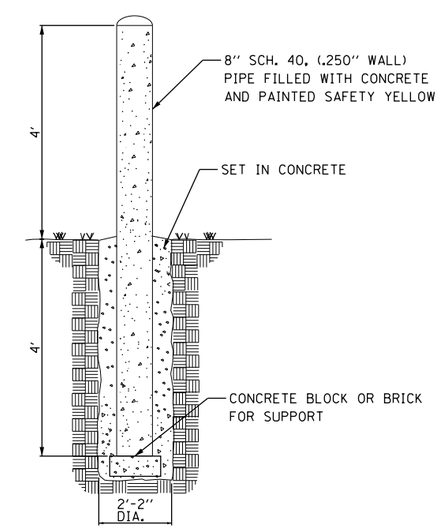

BOLLARD DETAIL

NO SCALE

FILE NAME = G:\CHI3\0109\Road\Sheets - B2 Contract\20131894-SHT-DETAIL-PATH.dgn

TranSystems	USER NAME = mbmcwhorter	DESIGNED - BSH	REVISED -
		DRAWN - MLB	REVISED -
	PLOT SCALE = 20.0000 ' / in.	CHECKED - MFD	REVISED -
	PLOT DATE = 8/4/2017	DATE - 8/7/2017	REVISED -

STATE OF ILLINOIS
DEPARTMENT OF TRANSPORTATION

ILLINOIS ROUTE 31
BIKE PATH CONNECTION AND GATE DETAIL

SCALE: 1" = 10' | SHEET 366 OF 611 SHEETS

F.A.U. RTE.	SECTION	COUNTY	TOTAL SHEETS	SHEET NO.
2298	16-00215-11-PV	KANE	611	366
		CONTRACT NO. 61E05		

FED. ROAD DIST. NO. 1 | ILLINOIS | FED. AID PROJECT

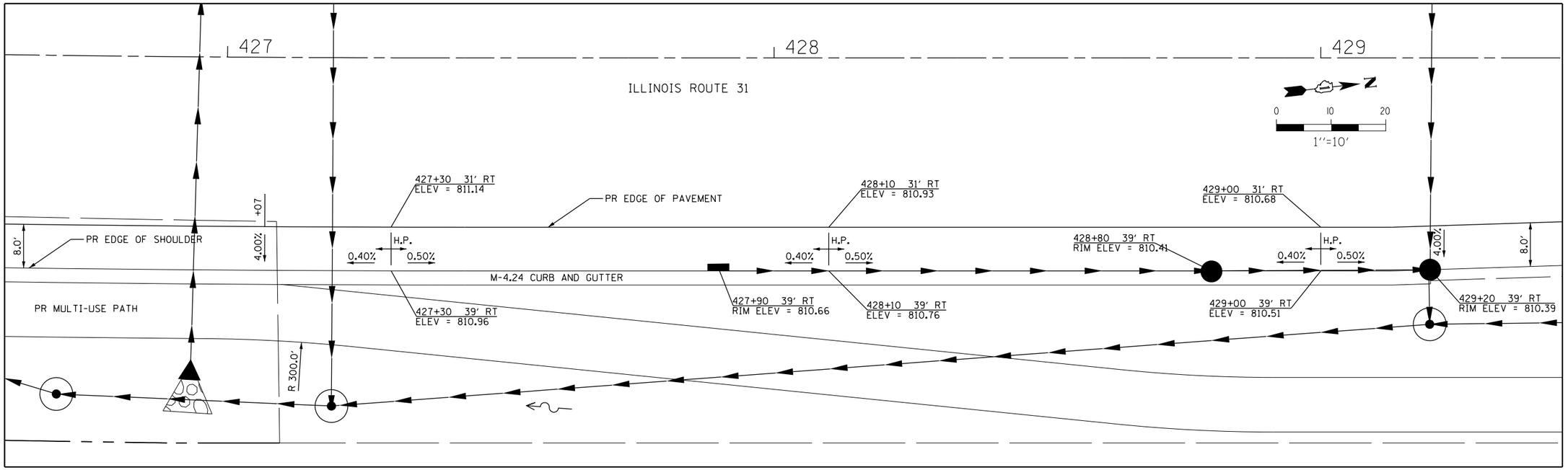

SHOULDER DETAIL 1

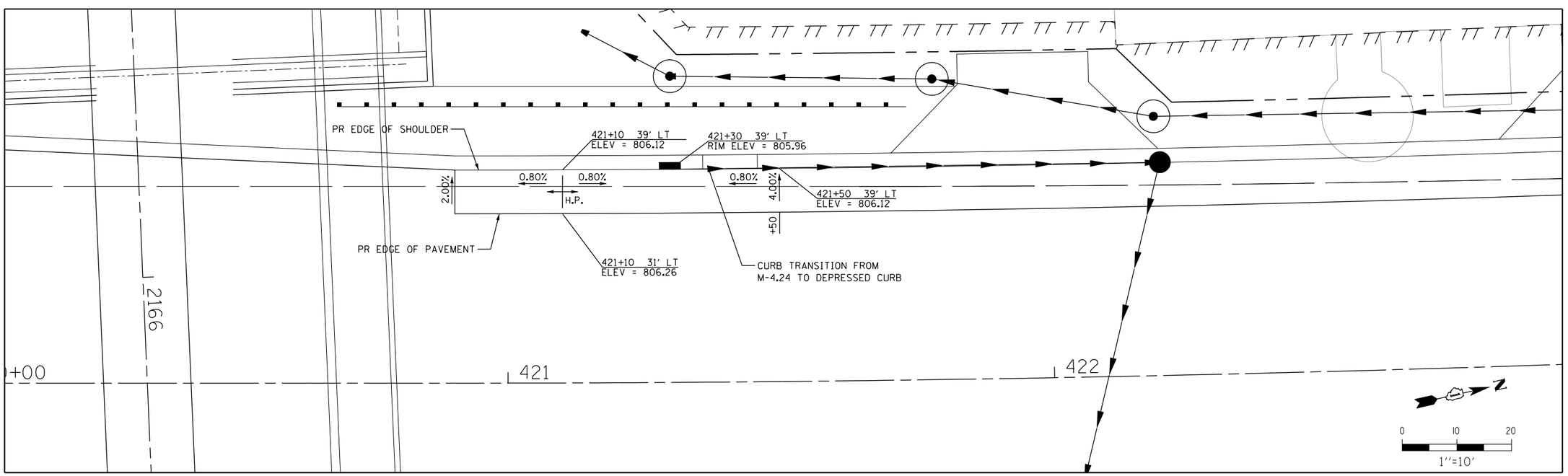

SHOULDER DETAIL 2

FILE NAME = G:\CH13\0109\Road\Sheets - B2 Contract\20131894-SHT-DETAIL-SHOULDER.dgn

TranSystems

USER NAME = mbmcwhorter	DESIGNED - BSH	REVISED -	
	DRAWN - MLB	REVISED -	
PLOT SCALE = 20.0000 ' / in.	CHECKED - MFD	REVISED -	
PLOT DATE = 8/4/2017	DATE - 8/7/2017	REVISED -	

STATE OF ILLINOIS
DEPARTMENT OF TRANSPORTATION

ILLINOIS ROUTE 31
SHOULDER DETAIL

SCALE: 1'' = 10' | SHEET 367 OF 611 SHEETS

F.A.U. RTE.	SECTION	COUNTY	TOTAL SHEETS	SHEET NO.
2298	16-00215-11-PV	KANE	611	367
		CONTRACT NO. 61E05		

FED. ROAD DIST. NO. 1 | ILLINOIS | FED. AID PROJECT

F.A.U. RTE.	SECTION	COUNTY	TOTAL SHEETS	SHEET NO.
2298	16-00215-11-PV	KANE	611	368
	ILLINOIS	CONTRACT NO. 61E05		

INDEX OF SHEETS

DESIGN DESIGNATION

LONGMEADOW PKWY – 29,000 (40) MINOR ARTERIAL 5.36 (PCC–20)
ILLINOIS ROUTE 31 – 22,000 (40) MINOR ARTERIAL (HMA)

TRAFFIC DATA

LONGMEADOW PARKWAY:

ADT:
2,300 (2011)
29,000 (2040)

SPEED LIMIT:
40 MPH (POSTED)
50 MPH (DESIGN)

P.V. = 97.0%
S.U. = 2.8 %
M.U. = 1.2%

ILLINOIS ROUTE 31:

ADT:
17.730 (2011)
22,000 (2040)

SPEED LIMIT:
50 MPH (POSTED)
55 MPH (DESIGN)

P.V. = 95.0%
S.U. = 5.0 %
M.U. = 1.0%

PROJECT LOCATED IN VILLAGE OF ALGONQUIN, DUNDEE TOWNSHIP, AND UNINCORPORATED KANE COUNTY

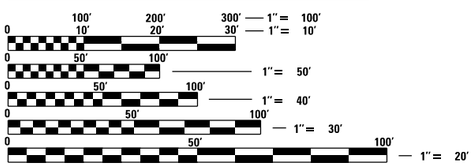

FULL SIZE PLANS HAVE BEEN PREPARED USING STANDARD ENGINEERING SCALES. REDUCED SIZED PLANS WILL NOT CONFORM TO STANDARD SCALES. IN MAKING MEASUREMENTS ON REDUCED PLANS, THE ABOVE SCALES MAY BE USED.

J.U.L.I.E.
JOINT UTILITY LOCATION INFORMATION FOR EXCAVATION
1–800–892–0123
OR 811

CONTRACT NO. 61E05

STATE OF ILLINOIS
DEPARTMENT OF TRANSPORTATION

PLANS FOR PROPOSED FEDERAL–AID HIGHWAY

FAU 2298 (LONGMEADOW PARKWAY)
KAREN DRIVE TO EAST OF IL ROUTE 31
ROADWAY WIDENING AND RECONSTRUCTION
SECTION 16–00215–11–PV
PROJECT 9TJY (262)
KANE COUNTY

VOLUME NO. 2

LOCATION OF SECTION INDICATED THUS:–

PRINTED BY THE AUTHORITY OF THE STATE OF ILLINOIS

PROGRAM AND OFFICE ENGINEER: CHARLES RIDDLE, P.E., (847) 705-4406 SCHAUMBURG, IL

Bench Mark: Chiseled " □ " Kane County BM 10-21 concrete slab southwest corner IL Route 31 and Lathrop Lane Sta. 425+45.25, 131.6' LT IL31 Elev. 806.44

Existing Structure: None

DESIGN SPECIFICATIONS

AASHTO LRFD Bridge Design Specifications, 7th Edition with 2015 & 2016 Interims

LOADING HL-93

Allow 50#/sq. ft. for future wearing surface.

DESIGN STRESSES

FIELD UNITS

f'c = 4,000 psi (Superstructure)
f'c = 3,500 psi (typ.)
fy = 60,000 psi (Reinforcement)

PRECAST UNITS

f'c = 4,500 psi (Precast Panels)

PRECAST PRESTRESSED UNITS

f'c = 8,500 psi
f'ci = 7,000 psi
fpu = 270,000 psi (0.6" ϕ low lax strands)
fpbt = 202,300 psi (0.6" ϕ low lax strands)

SEISMIC DATA

BRIDGE

Seismic Performance Zone (SPZ) = 1
Design Spectral Acceleration at 1.0 sec. (S_{D1}) = 0.082
Design Spectral Acceleration at 0.2 sec. (S_{DS}) = 0.144
Soil Site Class = D

CURVE DATA

(℄ IL31)
P.I. Sta. = 424+17.15
Δ = 6° 14' 29" (LT)
D = 0° 57' 20"
R = 5,996.00'
T = 326.91'
L = 653.17'
E = 8.91'
e = 2.40%
T.R. = 91'
S.E. Run = 109'
P.C. Sta. = 420+90.24
P.T. Sta. = 427+43.41

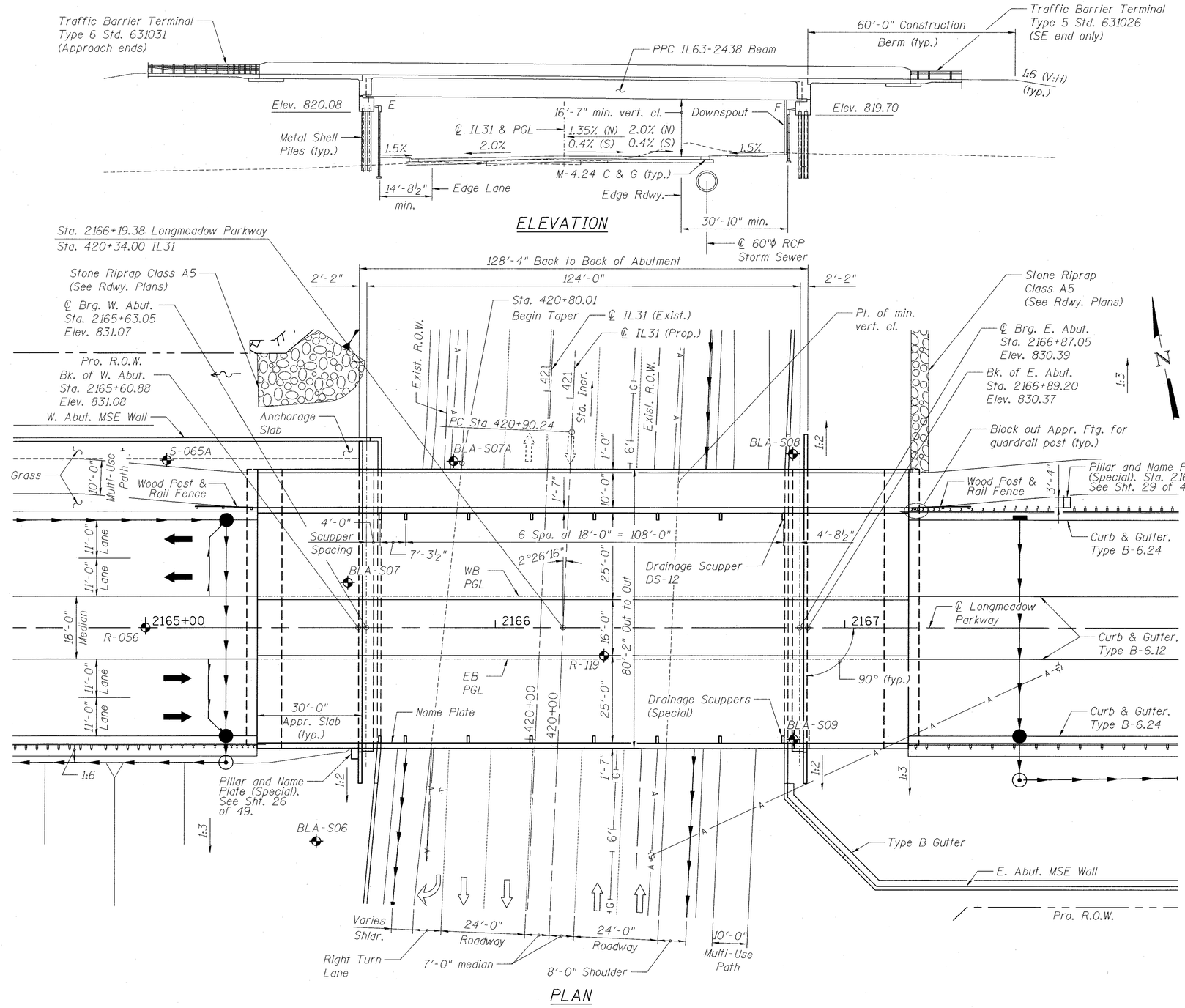

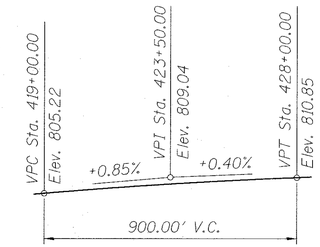

PROFILE GRADE IL31

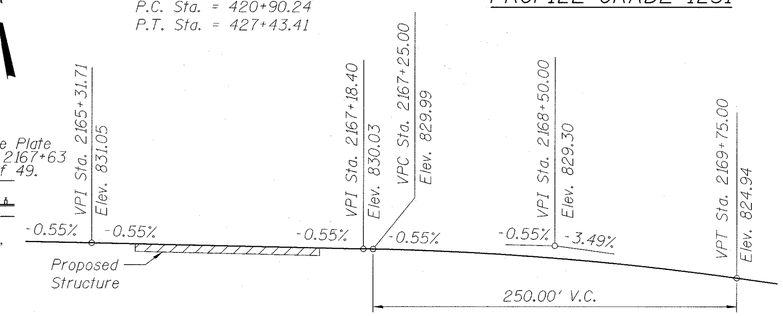

PROFILE GRADE LONGMEADOW PARKWAY

Along EB & WB PGL

I certify that to the best of my knowledge, information and belief, this bridge design is structurally adequate for the design loading shown on the plans. The design is an economical one of the style of structure and complies with the requirements of the current AASHTO LRFD Bridge Design Specifications.

STATE OF ILLINOIS JOEL A. TRIDLE 5051 ITASCA, IL STRUCTURAL ENGINEER

DATE SIGNED: 9-19-2017
EXP. DATE: 11-30-2018

APPROVED
FOR STRUCTURAL ADEQUACY ONLY

Engineer of Bridges and Structures

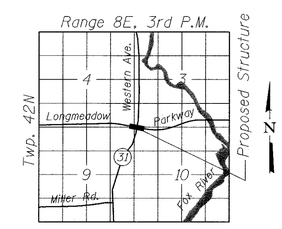

LOCATION SKETCH

GENERAL PLAN AND ELEVATION
LONGMEADOW PARKWAY OVER
IL ROUTE 31
KANE COUNTY
SECTION 16-00215-11-PV
STATION 2166+19.38
STRUCTURE NO. 045-3048

Bollinger, Lach & Associates, Inc. ITASCA, ILLINOIS	USER NAME =	DESIGNED - JJI	REVISED	STATE OF ILLINOIS DEPARTMENT OF TRANSPORTATION	GENERAL PLAN STRUCTURE NO. 045-3048	F.A.U RTE. 2298	SECTION 16-00215-11-PV
		CHECKED - NS	REVISED			COUNTY KANE	TOTAL SHEETS 611 / SHEET NO. 369
	PLOT SCALE =	DRAWN - GM	REVISED		SHEET NO. 1 OF 49 SHEETS	CONTRACT NO. 61E05	
	PLOT DATE = 9/19/2017	CHECKED - NS	REVISED			ILLINOIS FED. AID PROJECT	

FILE NAME = W:\894-010 KDOT LMP Section B\CADD SHEETS\structural\Section B2\LMP over IL31 Bridge\xxx-SHT_01 General Plan.dgn

GENERAL NOTES

Reinforcement bars designated (E) shall be epoxy coated.

Slipforming of the parapets is not allowed.

The embankment configuration shown shall be the minimum that must be placed and compacted prior to construction of the abutments.

A protective coat shall be applied to the top and inside faces the median, parapets and multi-use path. This work shall be performed after the polymer overlay is applied.

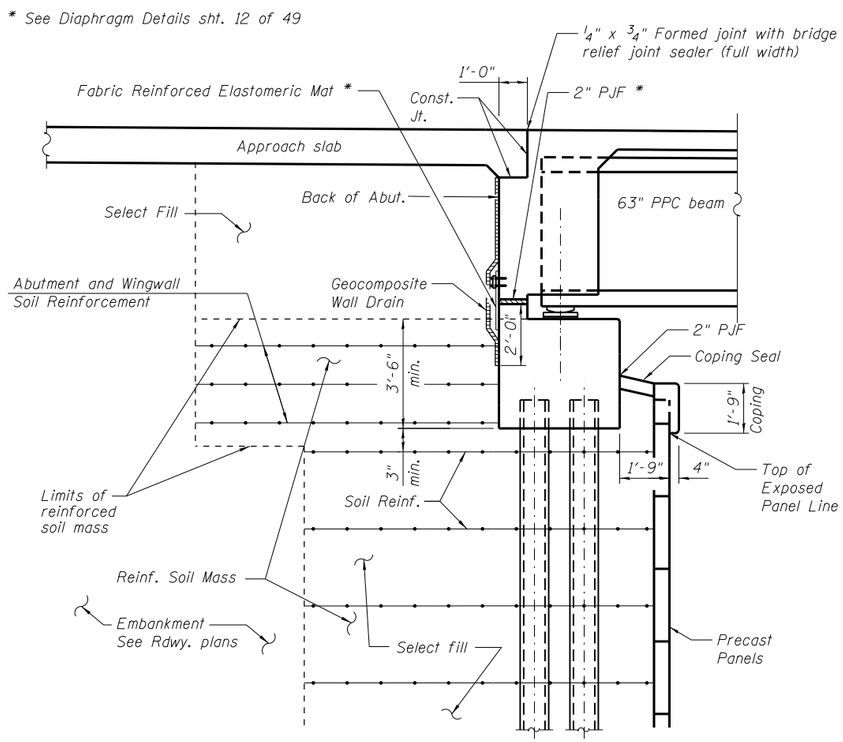

SECTION THRU SEMI-INTEGRAL ABUTMENT

See sheets 31 thru 39 of 49 for MSE wall details

INDEX OF SHEETS

TOTAL BILL OF MATERIAL

ITEM	UNIT	SUPER	SUB	TOTAL
Porous Granular Embankment	Cu. Yd.		2	2
Aggregate Subgrade Improvement	Cu. Yd.		871	871
Structure Excavation	Cu. Yd.		1,303	1,303
Removal and Disposal of Unsuitable Material for Structures	Cu. Yd.		871	871
Concrete Structures	Cu. Yd.	49.5	122.2	171.7
Concrete Superstructure	Cu. Yd.	498.9	128.9	627.8
Form Liner Textured Surface	Sq. Ft.		17,582	17,582
Protective Coat	Sq. Yd.	914	150	1,064
Concrete Superstructure (Approach Slab)	Cu. Yd.	236.6		236.6
Furnishing And Erecting Precast Prestressed Concrete Beams IL63N	Foot	1,254		1,254
Reinforcement Bars, Epoxy Coated	Pound	186,190	29,340	215,520
Bicycle Railing	Foot		458	458
Parapet Railing	Foot	362		362
Furnishing Metal Shell Piles 14" X 0.312"	Foot		3,160	3,160
Driving Piles	Foot		3,160	3,160
Test Pile Metal Shells	Each		2	2
Name Plates	Each	1		1
Elastomeric Bearing Assembly, Type I	Each	10		10
Steel Bearing Assembly	Each	10		10
Anchor Bolts, 1 1/2"	Each	40		40
Mechanically Stabilized Earth Retaining Wall	Sq. Ft.		24,815	24,815
Geocomposite Wall Drain	Sq. Yd.		134	134
Conduit Attached To Structure, 2 1/2" Dia., PVC Coated Galvanized Steel	Foot	886		886
Conduit Attached To Structure, 5" Dia., PVC Coated Galvanized Steel	Foot	886		886
Aggregate Column Ground Improvement	L Sum		1	1
Staining Concrete Structures	Sq. Ft.		17,582	17,582
Name Plates (Special)	Each		2	2
Anti-Graffiti Coating	Sq. Ft.		18,516	18,516
Bridge Deck Thin Polymer Overlay 3/8"	Sq. Yd.	1,036		1,036
Drainage Scuppers (Special)	Each	8		8
Drainage Scuppers, DS-12	Each	8		8
Drainage System	L Sum	1		1
Wood Post And Rail Fence	Foot	32		32
Junction Box, Stainless Steel, Attached To Structure, 60" X 36" X 12"	Each	2		2

STATION 2166+19.38
BUILT 201_ BY
STATE OF ILLINOIS
F.A.U. RTE. 2298
SEC. 16-00215-11-PV
LOADING HL-93
STRUCTURE NO. 045-3048

NAME PLATE

See Std. 515001

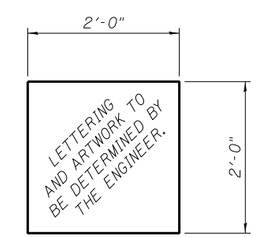

NAME PLATE (SPECIAL)

FILE NAME = W:\094-010 KDOT LMP Section B\CADD SHEETS\structural\Section B2\LMP over IL31 Bridge\xxx-SHT.02 GenData.dgn

Bollinger, Lach & Associates, Inc. ITASCA, ILLINOIS	USER NAME =	DESIGNED - JJI	REVISED
		CHECKED - NS	REVISED
	PLOT SCALE =	DRAWN - GM	REVISED
	PLOT DATE = 9/28/2017	CHECKED - NS	REVISED

STATE OF ILLINOIS
DEPARTMENT OF TRANSPORTATION

GENERAL DATA
STRUCTURE NO. 045-3048
SHEET NO. 2 OF 49 SHEETS

F.A.U RTE.	SECTION	COUNTY	TOTAL SHEETS	SHEET NO.
2298	16-00215-11-PV	KANE	611	370
		CONTRACT NO. 61E05		
		ILLINOIS FED. AID PROJECT		

BEAM 1

Location	Station	Offset	Theoretical Grade Elevations	Theoretical Grade Elevations Adjusted For Dead Load Deflection
Back of West Abut.	2165+60.88	-42.96	830.24	830.24
CL Brg. West Abut.	2165+63.05	-42.96	830.23	830.23
A	2165+73.05	-42.96	830.17	830.21
B	2165+83.05	-42.96	830.12	830.19
C	2165+93.05	-42.96	830.06	830.17
D	2166+03.05	-42.96	830.01	830.14
E	2166+13.05	-42.96	829.95	830.10
F	2166+23.05	-42.96	829.90	830.05
G	2166+33.05	-42.96	829.84	829.99
H	2166+43.05	-42.96	829.79	829.93
I	2166+53.05	-42.96	829.73	829.85
J	2166+63.05	-42.96	829.68	829.76
K	2166+73.05	-42.96	829.62	829.67
CL Brg. East Abut.	2166+87.05	-42.96	829.54	829.54
Back of East Abut.	2166+89.20	-42.96	829.53	829.53

BEAM 2

Location	Station	Offset	Theoretical Grade Elevations	Theoretical Grade Elevations Adjusted For Dead Load Deflection
Back of West Abut.	2165+60.88	-34.54	830.37	830.37
CL Brg. West Abut.	2165+63.05	-34.54	830.36	830.36
A	2165+73.05	-34.54	830.30	830.35
B	2165+83.05	-34.54	830.25	830.33
C	2165+93.05	-34.54	830.19	830.32
D	2166+03.05	-34.54	830.14	830.29
E	2166+13.05	-34.54	830.08	830.26
F	2166+23.05	-34.54	830.03	830.21
G	2166+33.05	-34.54	829.97	830.15
H	2166+43.05	-34.54	829.92	830.08
I	2166+53.05	-34.54	829.86	830.00
J	2166+63.05	-34.54	829.81	829.91
K	2166+73.05	-34.54	829.75	829.81
CL Brg. East Abut.	2166+87.05	-34.54	829.68	829.68
Back of East Abut.	2166+89.20	-34.54	829.66	829.66

BEAM 3

Location	Station	Offset	Theoretical Grade Elevations	Theoretical Grade Elevations Adjusted For Dead Load Deflection
Back of West Abut.	2165+60.88	-26.12	830.54	830.54
CL Brg. West Abut.	2165+63.05	-26.12	830.52	830.52
A	2165+73.05	-26.12	830.47	830.51
B	2165+83.05	-26.12	830.41	830.50
C	2165+93.05	-26.12	830.36	830.48
D	2166+03.05	-26.12	830.30	830.46
E	2166+13.05	-26.12	830.25	830.42
F	2166+23.05	-26.12	830.19	830.38
G	2166+33.05	-26.12	830.14	830.32
H	2166+43.05	-26.12	830.08	830.25
I	2166+53.05	-26.12	830.03	830.17
J	2166+63.05	-26.12	829.97	830.08
K	2166+73.05	-26.12	829.92	829.98
CL Brg. East Abut.	2166+87.05	-26.12	829.84	829.84
Back of East Abut.	2166+89.20	-26.12	829.83	829.83

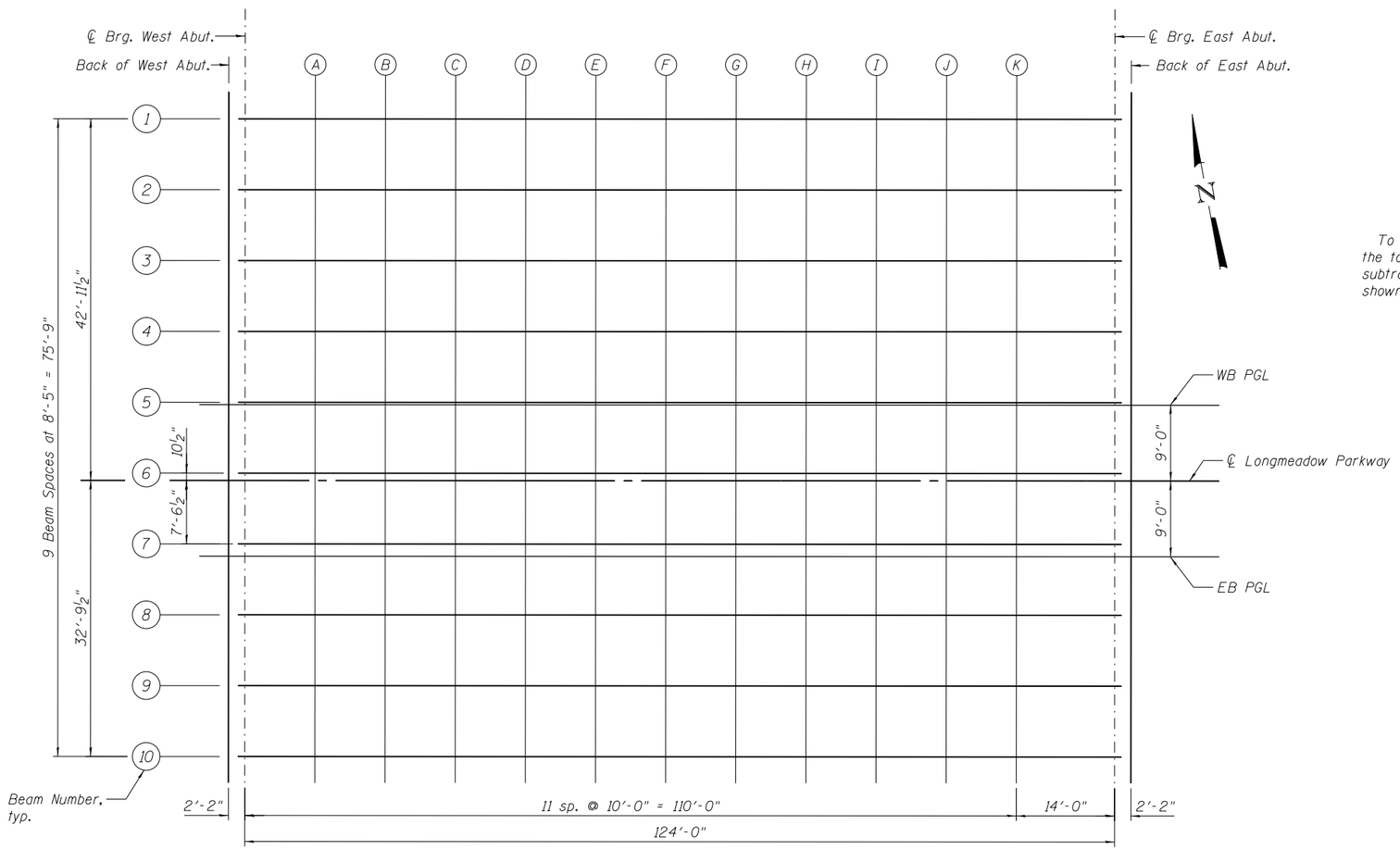

PLAN

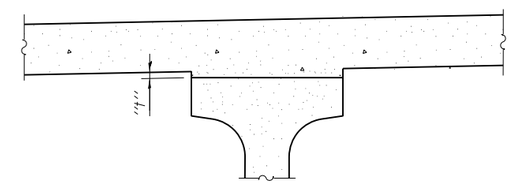

To determine "t": After all precast prestressed beams have been erected, elevations of the top flanges of the beams shall be taken at intervals shown below. These elevations subtracted from the "Theoretical Grade Elevations Adjusted for Dead Load Deflections" shown below, minus slab thickness, equals the fillet heights "t" above top flanges of beams.

FILLET HEIGHTS

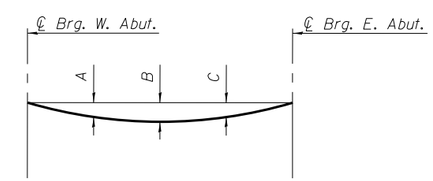

DEAD LOAD DEFLECTION DIAGRAM

(Includes weight of concrete, excluding beams)

Note:
The above deflections are not to be used in the field if the Engineer is working from the "Theoretical Grade Elevations Adjusted for Dead Load Deflections." Dimensions below are in inches.

GIRDER	A	B	C
1	1 3/8	1 7/8	1 3/8
2 through 9	1 1/2	2 1/4	1 1/2
10	1 1/4	1 3/4	1 1/4

FILE NAME = W:\894-010 KDOT LMP Section B\CADD SHEETS\structural\Section B2\LMP over IL31 Bridge\xxx-SHT.03 TopofSlabElev.dgn

Bollinger, Lach & Associates, Inc.
ITASCA, ILLINOIS

USER NAME =	DESIGNED - JJI	REVISED
	CHECKED - NS	REVISED
PLOT SCALE =	DRAWN - GM	REVISED
PLOT DATE = 9/28/2017	CHECKED - NS	REVISED

STATE OF ILLINOIS
DEPARTMENT OF TRANSPORTATION

TOP OF SLAB ELEVATIONS
STRUCTURE NO. 045-3048

SHEET NO. 3 OF 49 SHEETS

F.A.U RTE.	SECTION	COUNTY	TOTAL SHEETS	SHEET NO.
2298	16-00215-11-PV	KANE	611	371

CONTRACT NO. 61E05

ILLINOIS FED. AID PROJECT

BEAM 4

Location	Station	Offset	Theoretical Grade Elevations	Theoretical Grade Elevations Adjusted For Dead Load Deflection
Back of West Abut.	2165+60.88	-17.71	830.71	830.71
CL Brg. West Abut.	2165+63.05	-17.71	830.70	830.70
A	2165+73.05	-17.71	830.64	830.69
B	2165+83.05	-17.71	830.59	830.68
C	2165+93.05	-17.71	830.53	830.66
D	2166+03.05	-17.71	830.48	830.63
E	2166+13.05	-17.71	830.42	830.60
F	2166+23.05	-17.71	830.37	830.55
G	2166+33.05	-17.71	830.31	830.49
H	2166+43.05	-17.71	830.26	830.42
I	2166+53.05	-17.71	830.20	830.34
J	2166+63.05	-17.71	830.15	830.25
K	2166+73.05	-17.71	830.09	830.16
CL Brg. East Abut.	2166+87.05	-17.71	830.02	830.02
Back of East Abut.	2166+89.20	-17.71	830.01	830.01

BEAM 5

Location	Station	Offset	Theoretical Grade Elevations	Theoretical Grade Elevations Adjusted For Dead Load Deflection
Back of West Abut.	2165+60.88	-9.29	830.89	830.89
CL Brg. West Abut.	2165+63.05	-9.29	830.88	830.88
A	2165+73.05	-9.29	830.82	830.86
B	2165+83.05	-9.29	830.77	830.85
C	2165+93.05	-9.29	830.71	830.83
D	2166+03.05	-9.29	830.66	830.81
E	2166+13.05	-9.29	830.60	830.77
F	2166+23.05	-9.29	830.55	830.73
G	2166+33.05	-9.29	830.49	830.67
H	2166+43.05	-9.29	830.44	830.60
I	2166+53.05	-9.29	830.38	830.52
J	2166+63.05	-9.29	830.33	830.43
K	2166+73.05	-9.29	830.27	830.33
CL Brg. East Abut.	2166+87.05	-9.29	830.19	830.19
Back of East Abut.	2166+89.20	-9.29	830.18	830.18

WB PGL

Location	Station	Offset	Theoretical Grade Elevations	Theoretical Grade Elevations Adjusted For Dead Load Deflection
Back of West Abut.	2165+60.88	-9.00	830.89	830.89
CL Brg. West Abut.	2165+63.05	-9.00	830.88	830.88
A	2165+73.05	-9.00	830.82	830.87
B	2165+83.05	-9.00	830.77	830.86
C	2165+93.05	-9.00	830.71	830.84
D	2166+03.05	-9.00	830.66	830.81
E	2166+13.05	-9.00	830.60	830.78
F	2166+23.05	-9.00	830.55	830.73
G	2166+33.05	-9.00	830.49	830.67
H	2166+43.05	-9.00	830.44	830.60
I	2166+53.05	-9.00	830.38	830.52
J	2166+63.05	-9.00	830.33	830.43
K	2166+73.05	-9.00	830.27	830.34
CL Brg. East Abut.	2166+87.05	-9.00	830.20	830.20
Back of East Abut.	2166+89.20	-9.00	830.18	830.18

BEAM 6

Location	Station	Offset	Theoretical Grade Elevations	Theoretical Grade Elevations Adjusted For Dead Load Deflection
Back of West Abut.	2165+60.88	-0.87	831.06	831.06
CL Brg. West Abut.	2165+63.05	-0.87	831.05	831.05
A	2165+73.05	-0.87	831.00	831.04
B	2165+83.05	-0.87	830.94	831.03
C	2165+93.05	-0.87	830.89	831.01
D	2166+03.05	-0.87	830.83	830.98
E	2166+13.05	-0.87	830.78	830.95
F	2166+23.05	-0.87	830.72	830.90
G	2166+33.05	-0.87	830.67	830.84
H	2166+43.05	-0.87	830.61	830.77
I	2166+53.05	-0.87	830.56	830.69
J	2166+63.05	-0.87	830.50	830.60
K	2166+73.05	-0.87	830.45	830.51
CL Brg. East Abut.	2166+87.05	-0.87	830.37	830.37
Back of East Abut.	2166+89.20	-0.87	830.36	830.36

℄ LONGMEADOW PARKWAY

Location	Station	Offset	Theoretical Grade Elevations	Theoretical Grade Elevations Adjusted For Dead Load Deflection
Back of West Abut.	2165+60.88	0.00	831.08	831.08
CL Brg. West Abut.	2165+63.05	0.00	831.07	831.07
A	2165+73.05	0.00	831.01	831.06
B	2165+83.05	0.00	830.96	831.05
C	2165+93.05	0.00	830.90	831.03
D	2166+03.05	0.00	830.85	831.00
E	2166+13.05	0.00	830.79	830.97
F	2166+23.05	0.00	830.74	830.92
G	2166+33.05	0.00	830.68	830.86
H	2166+43.05	0.00	830.63	830.79
I	2166+53.05	0.00	830.57	830.71
J	2166+63.05	0.00	830.52	830.62
K	2166+73.05	0.00	830.46	830.53
CL Brg. East Abut.	2166+87.05	0.00	830.39	830.39
Back of East Abut.	2166+89.20	0.00	830.37	830.37

BEAM 7

Location	Station	Offset	Theoretical Grade Elevations	Theoretical Grade Elevations Adjusted For Dead Load Deflection
Back of West Abut.	2165+60.88	7.54	830.92	830.92
CL Brg. West Abut.	2165+63.05	7.54	830.91	830.91
A	2165+73.05	7.54	830.86	830.90
B	2165+83.05	7.54	830.80	830.89
C	2165+93.05	7.54	830.75	830.87
D	2166+03.05	7.54	830.69	830.85
E	2166+13.05	7.54	830.64	830.81
F	2166+23.05	7.54	830.58	830.76
G	2166+33.05	7.54	830.53	830.71
H	2166+43.05	7.54	830.47	830.64
I	2166+53.05	7.54	830.42	830.55
J	2166+63.05	7.54	830.36	830.46
K	2166+73.05	7.54	830.31	830.37
CL Brg. East Abut.	2166+87.05	7.54	830.23	830.23
Back of East Abut.	2166+89.20	7.54	830.22	830.22

EB PGL

Location	Station	Offset	Theoretical Grade Elevations	Theoretical Grade Elevations Adjusted For Dead Load Deflection
Back of West Abut.	2165+60.88	9.00	830.89	830.89
CL Brg. West Abut.	2165+63.05	9.00	830.88	830.88
A	2165+73.05	9.00	830.82	830.87
B	2165+83.05	9.00	830.77	830.86
C	2165+93.05	9.00	830.71	830.84
D	2166+03.05	9.00	830.66	830.81
E	2166+13.05	9.00	830.60	830.78
F	2166+23.05	9.00	830.55	830.73
G	2166+33.05	9.00	830.49	830.67
H	2166+43.05	9.00	830.44	830.60
I	2166+53.05	9.00	830.38	830.52
J	2166+63.05	9.00	830.33	830.43
K	2166+73.05	9.00	830.27	830.34
CL Brg. East Abut.	2166+87.05	9.00	830.20	830.20
Back of East Abut.	2166+89.20	9.00	830.18	830.18

BEAM 8

Location	Station	Offset	Theoretical Grade Elevations	Theoretical Grade Elevations Adjusted For Dead Load Deflection
Back of West Abut.	2165+60.88	15.96	830.75	830.75
CL Brg. West Abut.	2165+63.05	15.96	830.74	830.74
A	2165+73.05	15.96	830.68	830.73
B	2165+83.05	15.96	830.63	830.71
C	2165+93.05	15.96	830.57	830.70
D	2166+03.05	15.96	830.52	830.67
E	2166+13.05	15.96	830.46	830.64
F	2166+23.05	15.96	830.41	830.59
G	2166+33.05	15.96	830.35	830.53
H	2166+43.05	15.96	830.30	830.46
I	2166+53.05	15.96	830.24	830.38
J	2166+63.05	15.96	830.19	830.29
K	2166+73.05	15.96	830.13	830.19
CL Brg. East Abut.	2166+87.05	15.96	830.05	830.05
Back of East Abut.	2166+89.20	15.96	830.04	830.04

BEAM 9

Location	Station	Offset	Theoretical Grade Elevations	Theoretical Grade Elevations Adjusted For Dead Load Deflection
Back of West Abut.	2165+60.88	24.37	830.57	830.57
CL Brg. West Abut.	2165+63.05	24.37	830.56	830.56
A	2165+73.05	24.37	830.51	830.55
B	2165+83.05	24.37	830.45	830.54
C	2165+93.05	24.37	830.40	830.52
D	2166+03.05	24.37	830.34	830.50
E	2166+13.05	24.37	830.29	830.46
F	2166+23.05	24.37	830.23	830.41
G	2166+33.05	24.37	830.18	830.35
H	2166+43.05	24.37	830.12	830.28
I	2166+53.05	24.37	830.07	830.20
J	2166+63.05	24.37	830.01	830.11
K	2166+73.05	24.37	829.96	830.02
CL Brg. East Abut.	2166+87.05	24.37	829.88	829.88
Back of East Abut.	2166+89.20	24.37	829.87	829.87

BEAM 10

Location	Station	Offset	Theoretical Grade Elevations	Theoretical Grade Elevations Adjusted For Dead Load Deflection
Back of West Abut.	2165+60.88	32.79	830.40	830.40
CL Brg. West Abut.	2165+63.05	32.79	830.39	830.39
A	2165+73.05	32.79	830.33	830.37
B	2165+83.05	32.79	830.28	830.34
C	2165+93.05	32.79	830.22	830.32
D	2166+03.05	32.79	830.17	830.29
E	2166+13.05	32.79	830.11	830.25
F	2166+23.05	32.79	830.06	830.20
G	2166+33.05	32.79	830.00	830.14
H	2166+43.05	32.79	829.95	830.07
I	2166+53.05	32.79	829.89	830.00
J	2166+63.05	32.79	829.84	829.92
K	2166+73.05	32.79	829.78	829.83
CL Brg. East Abut.	2166+87.05	32.79	829.70	829.70
Back of East Abut.	2166+89.20	32.79	829.69	829.69

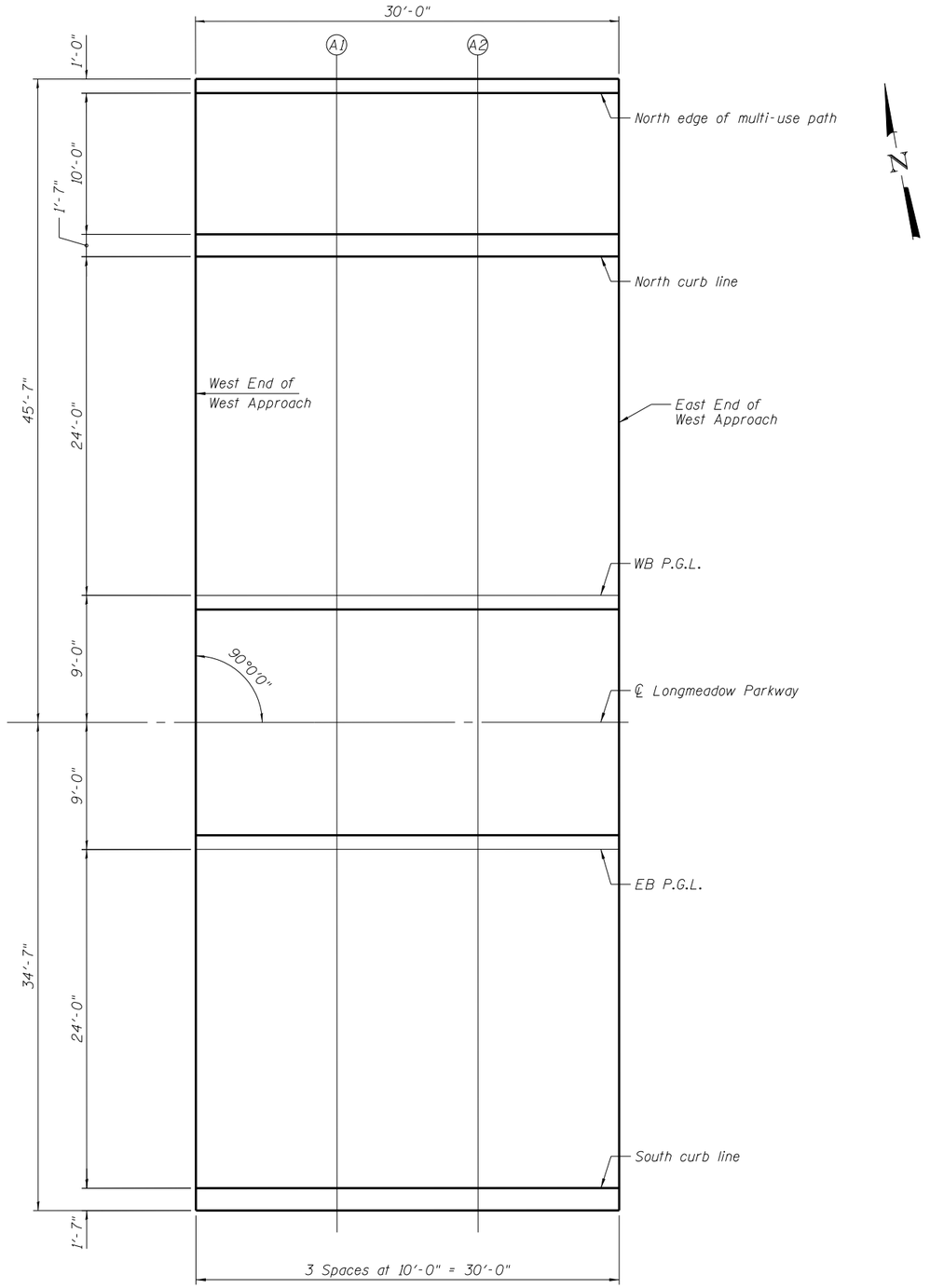

PLAN

NORTH EDGE OF MULTI-USE PATH

Location	Station	Offset	Theoretical Grade Elevations
West End of West Appr.	2165+31.87	-44.58	830.37
A1	2165+41.87	-44.58	830.32
A2	2165+51.87	-44.58	830.26
East End of West Appr.	2165+61.87	-44.58	830.21

NORTH CURB LINE

Location	Station	Offset	Theoretical Grade Elevations
West End of West Appr.	2165+31.87	-33.00	830.55
A1	2165+41.87	-33.00	830.50
A2	2165+51.87	-33.00	830.44
East End of West Appr.	2165+61.87	-33.00	830.39

WB P.G.L.

Location	Station	Offset	Theoretical Grade Elevations
West End of West Appr.	2165+31.87	-9.00	831.05
A1	2165+41.87	-9.00	831.00
A2	2165+51.87	-9.00	830.94
East End of West Appr.	2165+61.87	-9.00	830.89

℄ LONGMEADOW PARKWAY

Location	Station	Offset	Theoretical Grade Elevations
West End of West Appr.	2165+31.87	0.00	831.24
A1	2165+41.87	0.00	831.19
A2	2165+51.87	0.00	831.13
East End of West Appr.	2165+61.87	0.00	831.07

EB P.G.L.

Location	Station	Offset	Theoretical Grade Elevations
West End of West Appr.	2165+31.87	9.00	831.05
A1	2165+41.87	9.00	831.00
A2	2165+51.87	9.00	830.94
East End of West Appr.	2165+61.87	9.00	830.89

SOUTH CURB LINE

Location	Station	Offset	Theoretical Grade Elevations
West End of West Appr.	2165+31.87	33.00	830.55
A1	2165+41.87	33.00	830.50
A2	2165+51.87	33.00	830.44
East End of West Appr.	2165+61.87	33.00	830.39

FILE NAME = W:\894-010 KDOT LMP Section B\CADD SHEETS\structural\Section B2\LMP over IL31 Bridge\xxx-SHT.06 TopofWAppSlabElev.dgn

Bollinger, Lach & Associates, Inc.
ITASCA, ILLINOIS

USER NAME =	DESIGNED - JJI	REVISED	
	CHECKED - NS	REVISED	
PLOT SCALE =	DRAWN - GM	REVISED	
PLOT DATE = 9/28/2017	CHECKED - NS	REVISED	

STATE OF ILLINOIS
DEPARTMENT OF TRANSPORTATION

TOP OF WEST APPROACH SLAB ELEVATIONS
STRUCTURE NO. 045-3048

SHEET NO. 6 OF 49 SHEETS

F.A.U RTE.	SECTION	COUNTY	TOTAL SHEETS	SHEET NO.
2298	16-00215-11-PV	KANE	611	374

CONTRACT NO. 61E05

ILLINOIS FED. AID PROJECT

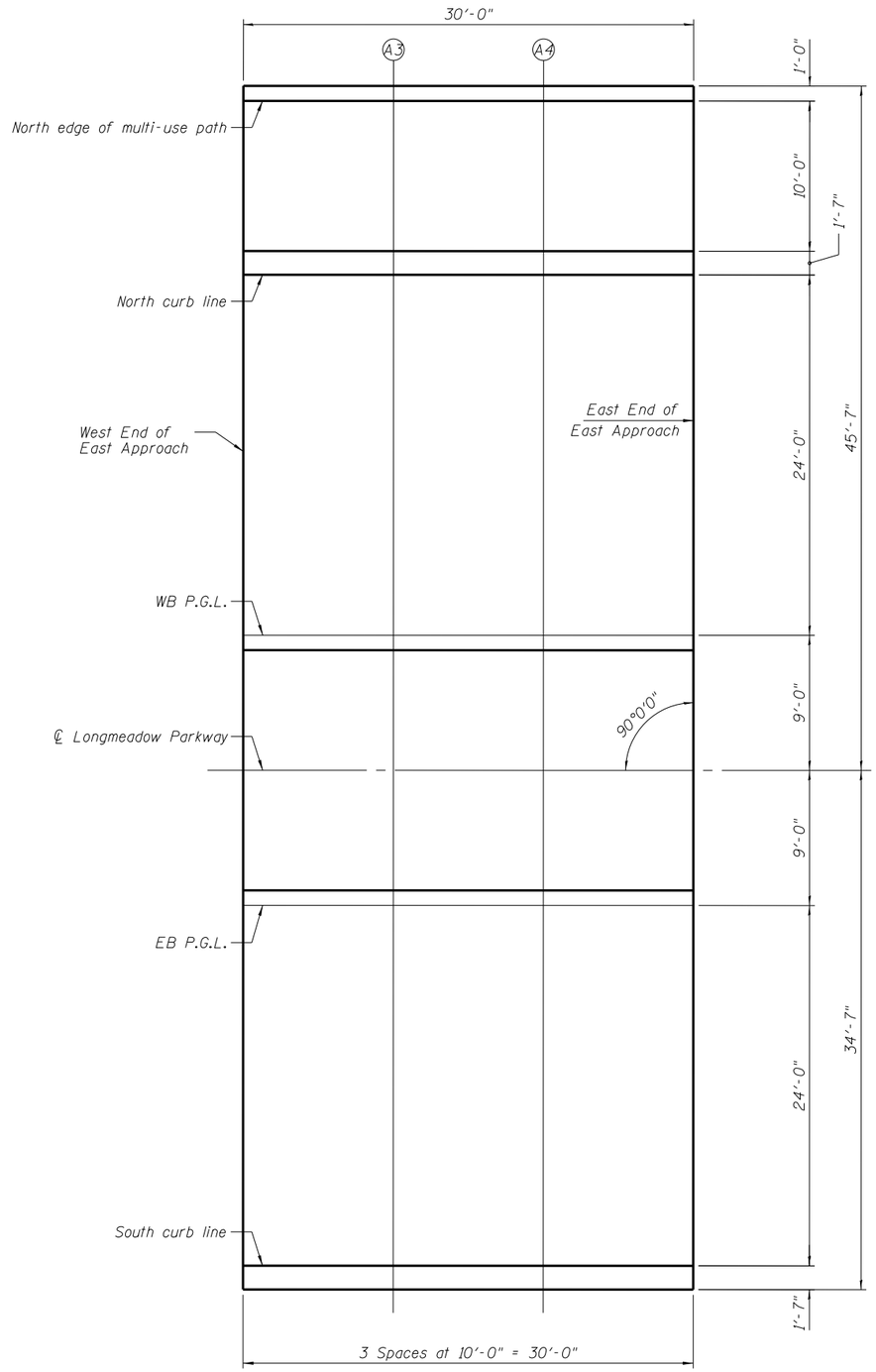

PLAN

NORTH EDGE OF MULTI-USE PATH

Location	Station	Offset	Theoretical Grade Elevations
West End of East Appr.	2166+88.21	-44.58	829.51
A3	2166+98.21	-44.58	829.46
A4	2167+08.21	-44.58	829.40
East End of East Appr.	2167+18.21	-44.58	829.35

NORTH CURB LINE

Location	Station	Offset	Theoretical Grade Elevations
West End of East Appr.	2166+88.21	-33.00	829.69
A3	2166+98.21	-33.00	829.64
A4	2167+08.21	-33.00	829.58
East End of East Appr.	2167+18.21	-33.00	829.53

WB P.G.L.

Location	Station	Offset	Theoretical Grade Elevations
West End of East Appr.	2166+88.21	-9.00	830.19
A3	2166+98.21	-9.00	830.14
A4	2167+08.21	-9.00	830.08
East End of East Appr.	2167+18.21	-9.00	830.03

℄ LONGMEADOW PARKWAY

Location	Station	Offset	Theoretical Grade Elevations
West End of East Appr.	2166+88.21	0.00	830.38
A3	2166+98.21	0.00	830.33
A4	2167+08.21	0.00	830.27
East End of East Appr.	2167+18.21	0.00	830.22

EB P.G.L.

Location	Station	Offset	Theoretical Grade Elevations
West End of East Appr.	2166+88.21	9.00	830.19
A3	2166+98.21	9.00	830.14
A4	2167+08.21	9.00	830.08
East End of East Appr.	2167+18.21	9.00	830.03

SOUTH CURB LINE

Location	Station	Offset	Theoretical Grade Elevations
West End of East Appr.	2166+88.21	33.00	829.64
A3	2166+98.21	33.00	829.69
A4	2167+08.21	33.00	829.58
East End of East Appr.	2167+18.21	33.00	829.53

FILE NAME = W:\894-010 KDOT LMP Section B\CADD SHEETS\structural\Section B2\LMP over IL31 Bridge\xxx-SHT_07 TopofEAppSlabElev.dgn

Bollinger, Lach & Associates, Inc.
ITASCA, ILLINOIS

USER NAME =	DESIGNED - JJI	REVISED	
	CHECKED - NS	REVISED	
PLOT SCALE =	DRAWN - GM	REVISED	
PLOT DATE = 9/28/2017	CHECKED - NS	REVISED	

STATE OF ILLINOIS
DEPARTMENT OF TRANSPORTATION

TOP OF EAST APPROACH SLAB ELEVATIONS
STRUCTURE NO. 045-3048

SHEET NO. 7 OF 49 SHEETS

F.A.U RTE.	SECTION	COUNTY	TOTAL SHEETS	SHEET NO.
2298	16-00215-11-PV	KANE	611	375
		CONTRACT NO. 61E05		
		ILLINOIS FED. AID PROJECT		

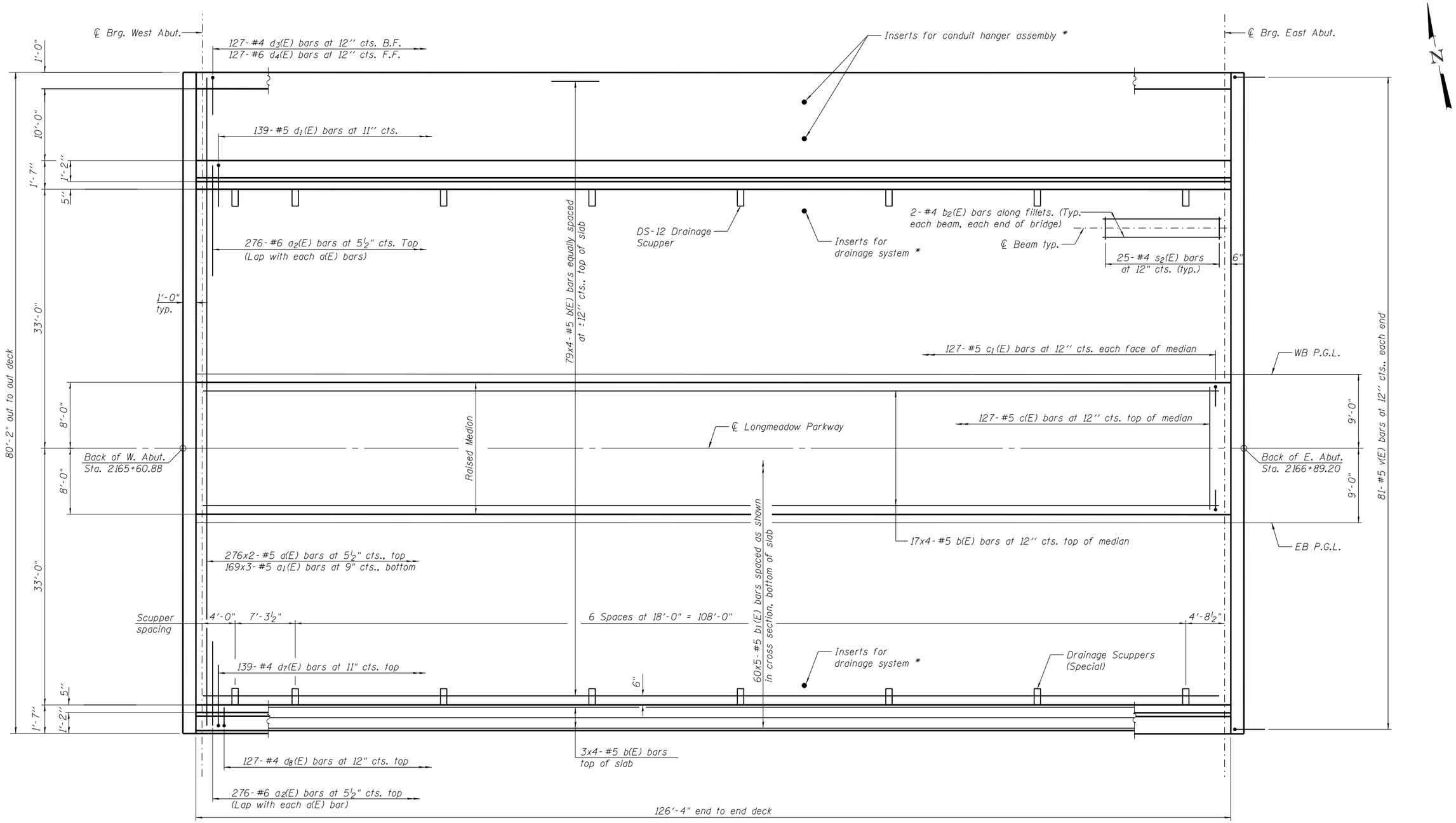

MINIMUM BAR LAP

#5 bar = 3'-6"

* See approved shop drawings for insert details

PLAN

Notes:

See sheet 13 of 49 for superstructure details and Bill of Material.

Bars indicated thus 20 x 3-#5 etc. indicates 20 lines of bars with 3 lengths per line.

See sheet 11 of 49 for parapet reinforcement.

See sheet 9 of 49 for deck section and fillet reinforcement.

FILE NAME = W:\894-010 KDOT LMP Section B\CADD SHEETS\structural\Section B2\LMP over IL31 Bridge\xxx-SHT-08 Superstructure Plan.dgn

Bollinger, Lach & Associates, Inc.
ITASCA, ILLINOIS

USER NAME =	DESIGNED - JJI	REVISED	
	CHECKED - NS	REVISED	
PLOT SCALE =	DRAWN - GM	REVISED	
PLOT DATE = 9/28/2017	CHECKED - NS	REVISED	

STATE OF ILLINOIS
DEPARTMENT OF TRANSPORTATION

SUPERSTRUCTURE PLAN
STRUCTURE NO. 045-3048

SHEET NO. 8 OF 49 SHEETS

F.A.U RTE.	SECTION	COUNTY	TOTAL SHEETS	SHEET NO.
2298	16-00215-11-PV	KANE	611	376

CONTRACT NO. 61E05

ILLINOIS FED. AID PROJECT

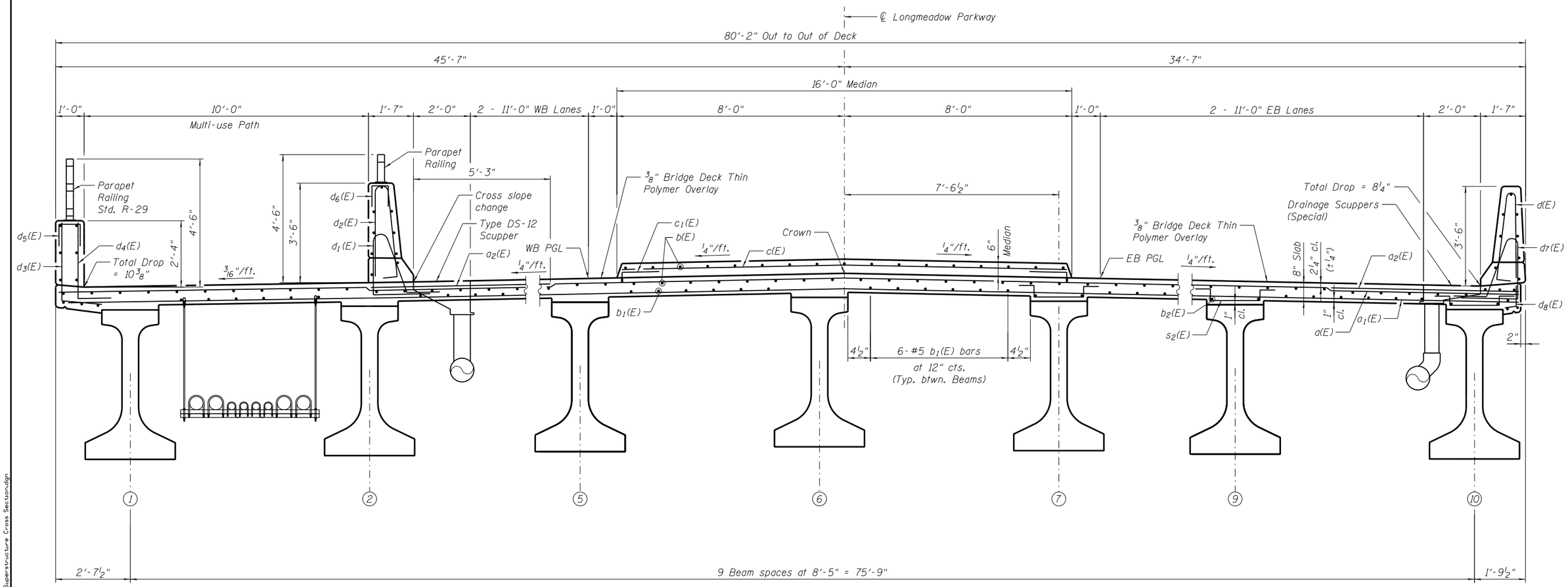

CROSS SECTION

(Looking East)

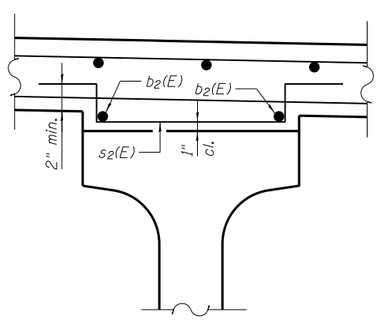

FILLET REINFORCEMENT DETAIL

FILE NAME = w:\894-010 KDOT LMP Section B\CADD SHEETS\structural\Section B2\LMP over IL31 Bridge\xxx-SHT-09 Superstructure Cross Section.dgn

Bollinger, Lach & Associates, Inc. ITASCA, ILLINOIS	USER NAME =	DESIGNED - JJI	REVISED
		CHECKED - NS	REVISED
	PLOT SCALE =	DRAWN - GM	REVISED
	PLOT DATE = 9/28/2017	CHECKED - NS	REVISED

STATE OF ILLINOIS
DEPARTMENT OF TRANSPORTATION

SUPERSTRUCTURE CROSS SECTION
STRUCTURE NO. 045-3048

SHEET NO. 9 OF 49 SHEETS

F.A.U RTE.	SECTION	COUNTY	TOTAL SHEETS	SHEET NO.
2298	16-00215-11-PV	KANE	611	377
		CONTRACT NO. 61E05		
		ILLINOIS FED. AID PROJECT		

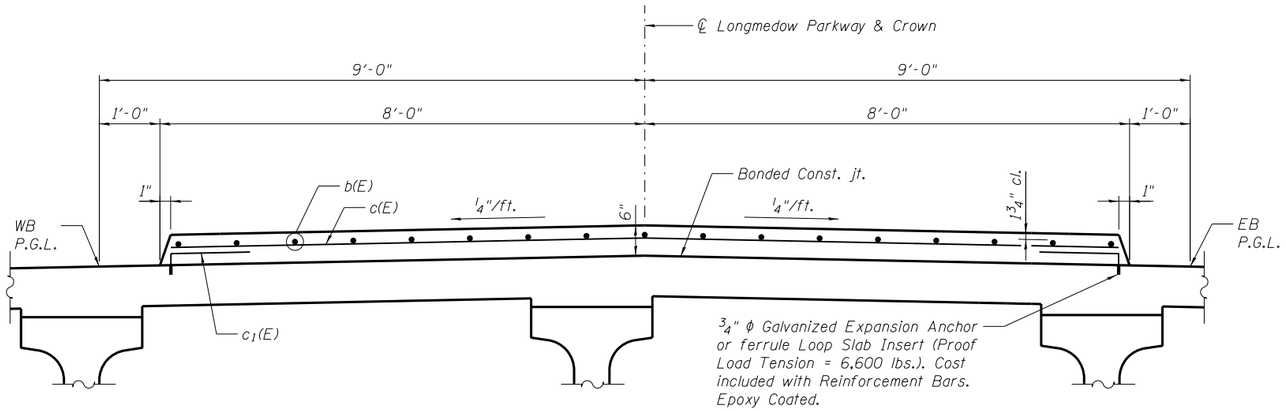

MEDIAN CROSS SECTION

(Looking East)
(Deck reinforcement omitted for clarity)

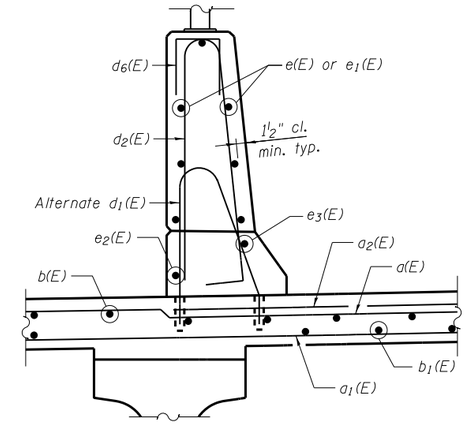

DETAIL A

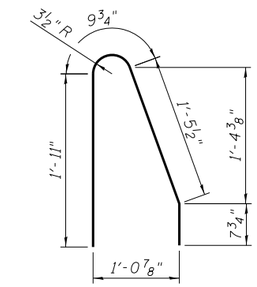

ALTERNATE BAR $d_1(E)$

At North Rdwy. Parapet

Drill and set Alternate #5 $d_1(E)$ bar according to Article 509.06 of the Standard Specifications. Drilled holes shall be roughened or scored per manufacturer's recommendations. Maximum depth of hole shall not exceed 6".

The Contractor shall take all necessary precautions to prevent drilled hole interference with deck reinforcement bars. Locate longitudinal bars to miss drilled locations. Locate drilled holes to miss transference bars in deck.

If alternate parapet reinforcement is chosen, cost of alternate d (E) bars, drilling, and setting is included with the cost of Reinforcement Bars, Epoxy Coated.

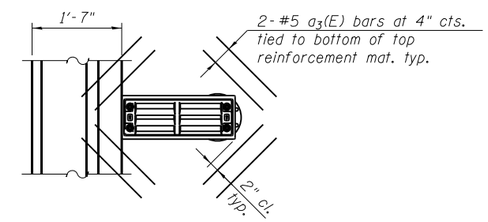

DETAIL AT SCUPPER

Note:
Cut longitudinal reinforcement to clear drainage scuppers.

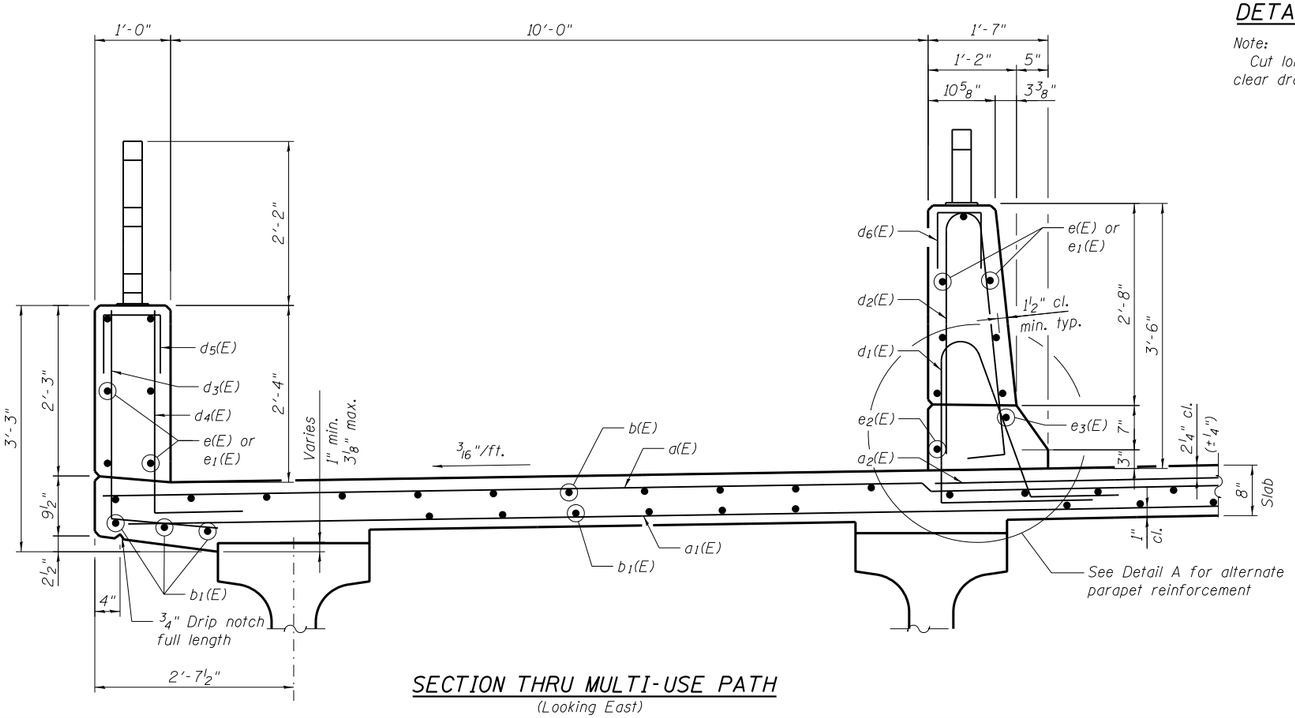

SECTION THRU MULTI-USE PATH

(Looking East)

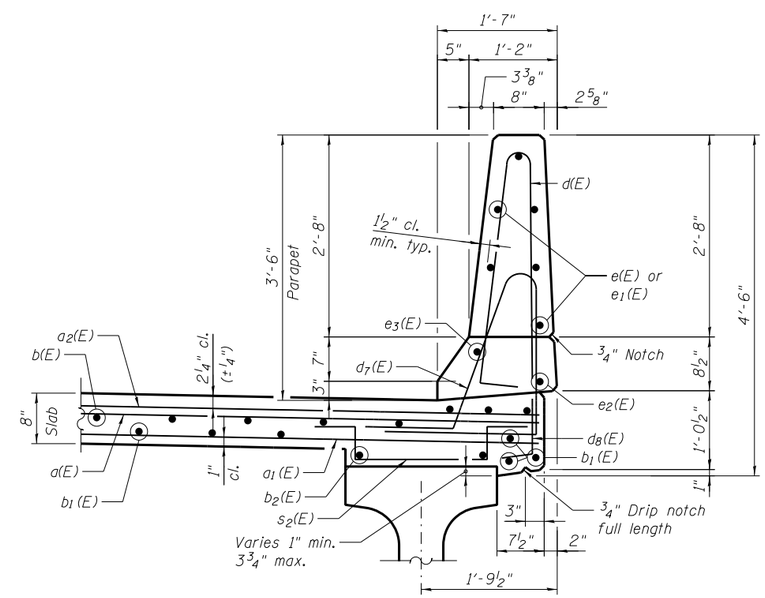

SECTION THRU SOUTH RDWY. PARAPET

(Looking East)

FILE NAME = M:\894-010 KDOT LMP Section B\CADD SHEETS\structural\Section B2\LMP over IL31 Bridge\xxx-SHT_10 PARAPET AND MEDIAN SECT.dgn

Bollinger, Lach & Associates, Inc. ITASCA, ILLINOIS	USER NAME =	DESIGNED - JJI	REVISED
		CHECKED - NS	REVISED
	PLOT SCALE =	DRAWN - GM	REVISED
	PLOT DATE = 9/28/2017	CHECKED - NS	REVISED

STATE OF ILLINOIS
DEPARTMENT OF TRANSPORTATION

PARAPET AND MEDIAN SECTIONS
STRUCTURE NO. 045-3048
SHEET NO. 10 OF 49 SHEETS

F.A.U RTE.	SECTION	COUNTY	TOTAL SHEETS	SHEET NO.
2298	16-00215-11-PV	KANE	611	378
		CONTRACT NO. 61E05		
		ILLINOIS FED. AID PROJECT		

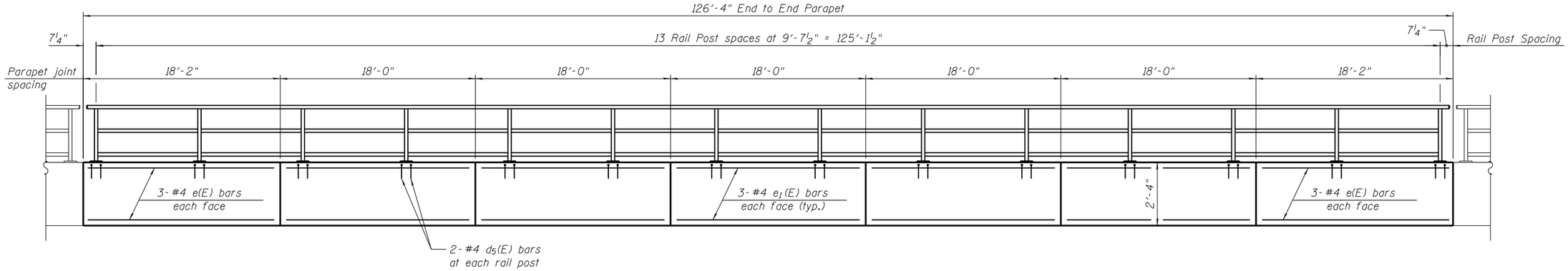

INSIDE ELEVATION OF NORTH SIDEWALK PARAPET

(Looking North)

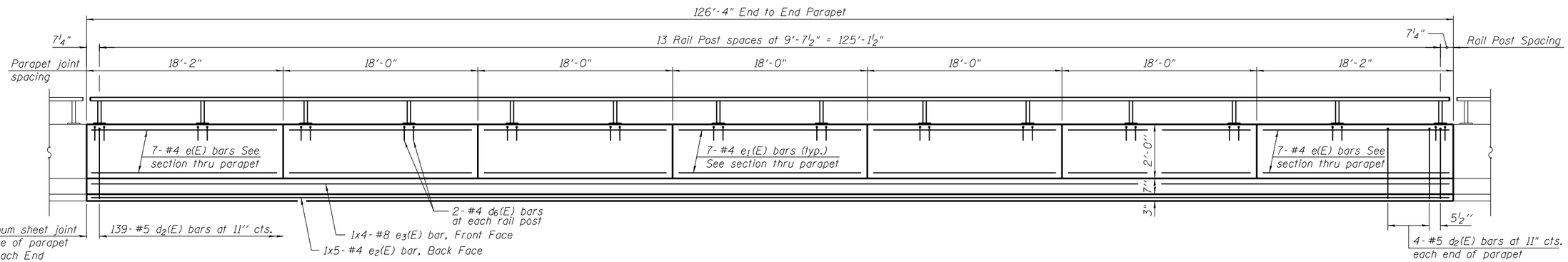

INSIDE ELEVATION OF NORTH ROADWAY PARAPET

Looking North

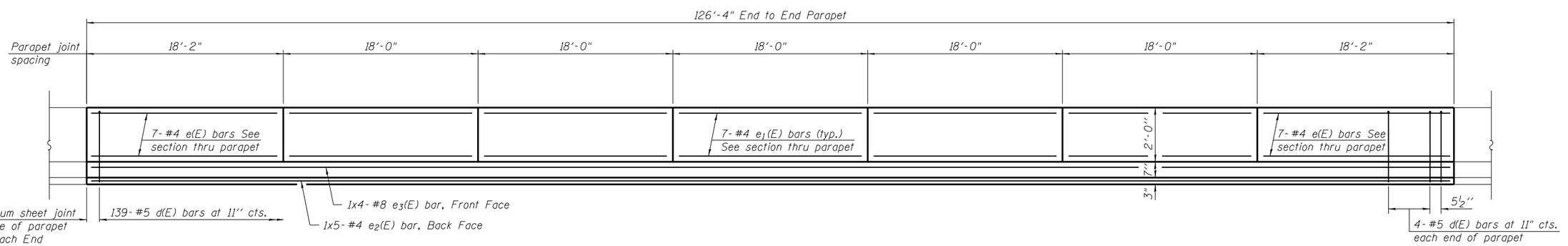

INSIDE ELEVATION OF SOUTH ROADWAY PARAPET

(Looking South)

MINIMUM BAR LAP

#4 bar = 2'-5"
#8 bar = 6'-9"

Note:
See sheet 10 of 49 for sections thru parapets.

FILE NAME = W:\894-010 KDOT LMP Section B\CADD SHEETS\structural\Section B2\LMP over IL31 Bridge\xxx-SHT-11 Parapet Elevations.dgn

Bollinger, Lach & Associates, Inc. ITASCA, ILLINOIS	USER NAME =	DESIGNED - JJI	REVISED
		CHECKED - NS	REVISED
	PLOT SCALE =	DRAWN - GM	REVISED
	PLOT DATE = 9/28/2017	CHECKED - NS	REVISED

STATE OF ILLINOIS
DEPARTMENT OF TRANSPORTATION

PARAPET ELEVATIONS
STRUCTURE NO. 045-3048

SHEET NO. 11 OF 49 SHEETS

F.A.U RTE.	SECTION	COUNTY	TOTAL SHEETS	SHEET NO.
2298	16-00215-11-PV	KANE	611	379
		CONTRACT NO. 61E05		
		ILLINOIS FED. AID PROJECT		

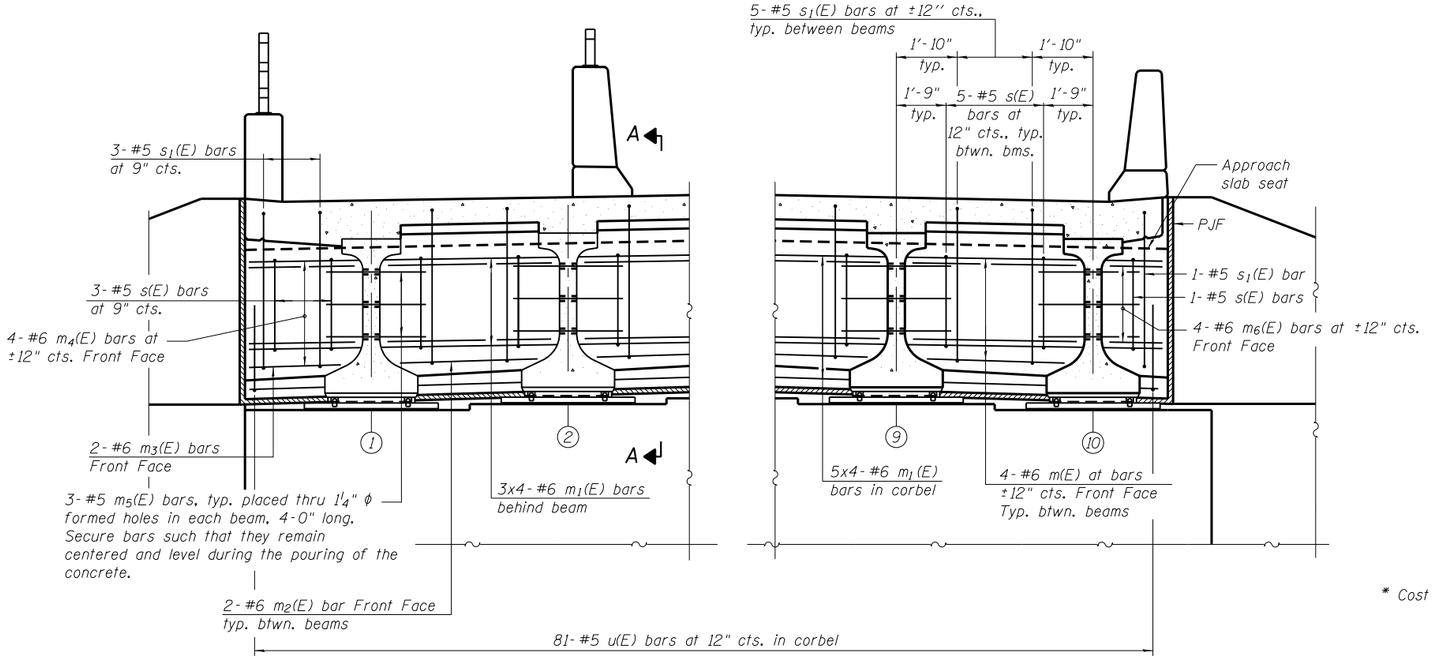

DIAPHRAGM ELEVATION AT ABUTMENT

(East Abutment Shown, West Abutment Similar)

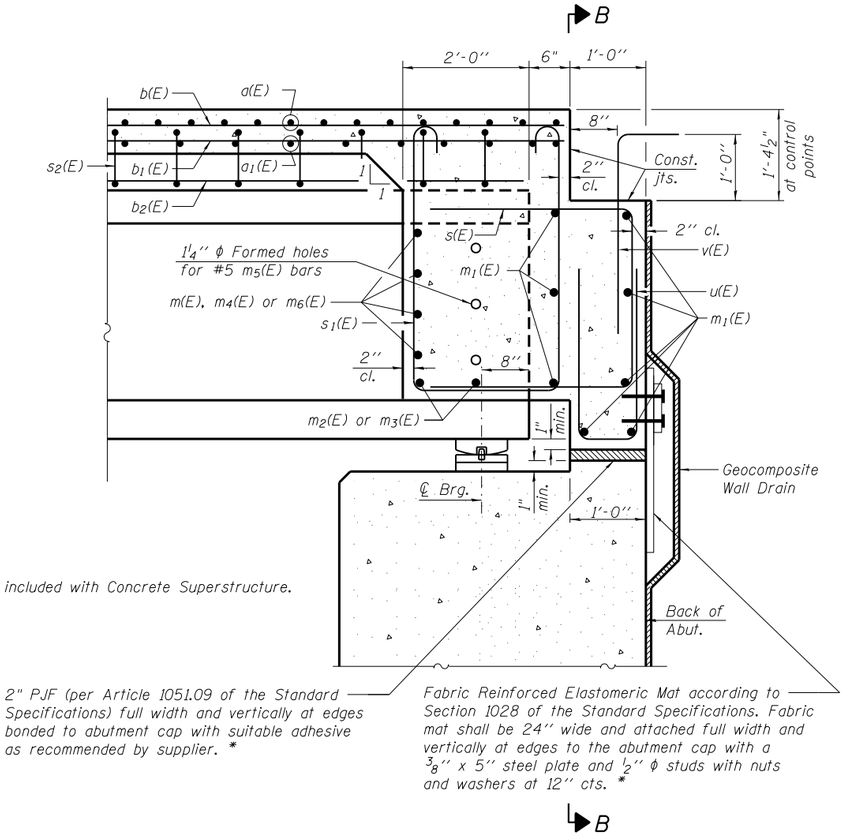

* Cost included with Concrete Superstructure.

SECTION A-A

(Fixed Bearing shown for East Abutment Elastomeric Bearing at West Abutment)

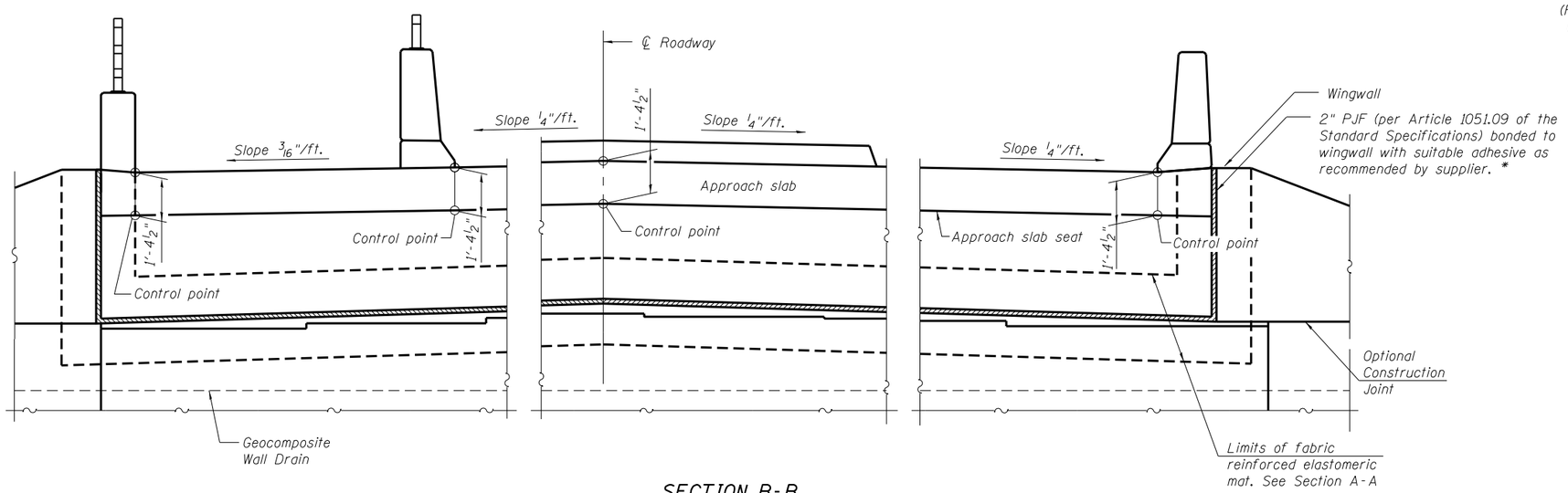

SECTION B-B

Notes:

Reinforcement bars in diaphragm are billed with superstructure on sheet 13 of 49.

Concrete in diaphragm is included with Concrete Superstructure on sheet 13 of 49.

For details of bars s(E), s_1(E), u(E) and v(E) see sheet 13 of 49.

The approach slab seat shall have a constant slopes determined from the control points shown.

Bars indicated thus 5x4- #6 etc. indicates 5 lines of bars with 4 lengths per line.

MINIMUM BAR LAP

#6 bar = 4'-5"

FILE NAME = W:\894-010 KDOT LMP Section B\CADD SHEETS\structural\Section B2\LMP over IL31 Bridge\xxx-SHT.12 Diaphram Details.dgn

Bollinger, Lach & Associates, Inc. ITASCA, ILLINOIS	USER NAME =	DESIGNED - JJI	REVISED	STATE OF ILLINOIS DEPARTMENT OF TRANSPORTATION	DIAPHRAGM DETAILS STRUCTURE NO. 045-3048
		CHECKED - NS	REVISED		
	PLOT SCALE =	DRAWN - GM	REVISED		
	PLOT DATE = 9/28/2017	CHECKED - NS	REVISED		SHEET NO. 12 OF 49 SHEETS

F.A.U RTE.	SECTION	COUNTY	TOTAL SHEETS	SHEET NO.
2298	16-00215-11-PV	KANE	611	380
		CONTRACT NO. 61E05		
		ILLINOIS FED. AID PROJECT		

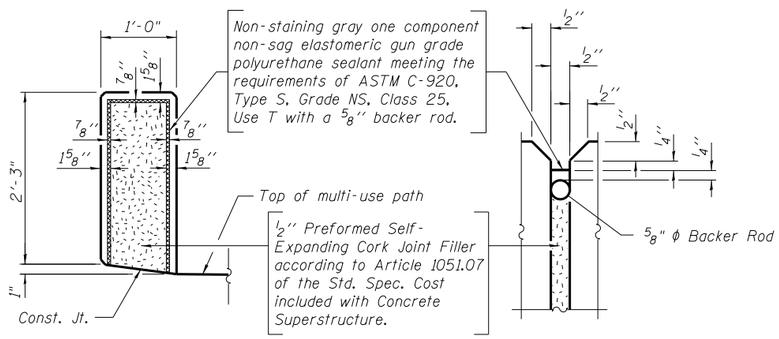

NORTH MULTI-USE PATH PARAPET JOINT DETAILS

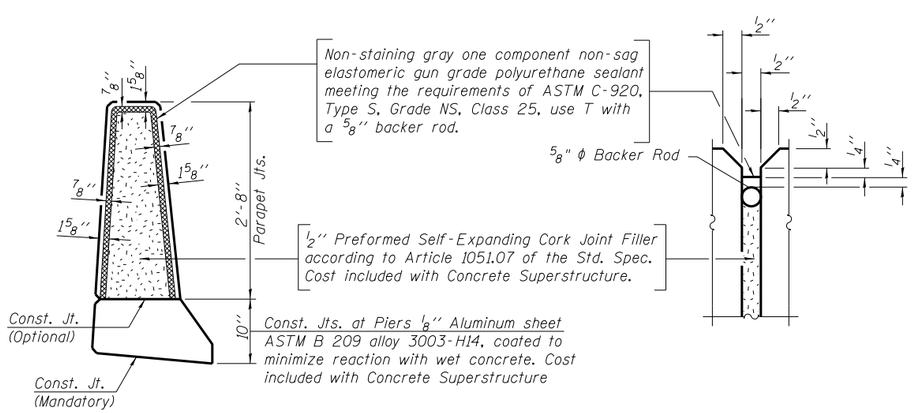

ROADWAY PARAPET JOINT DETAILS

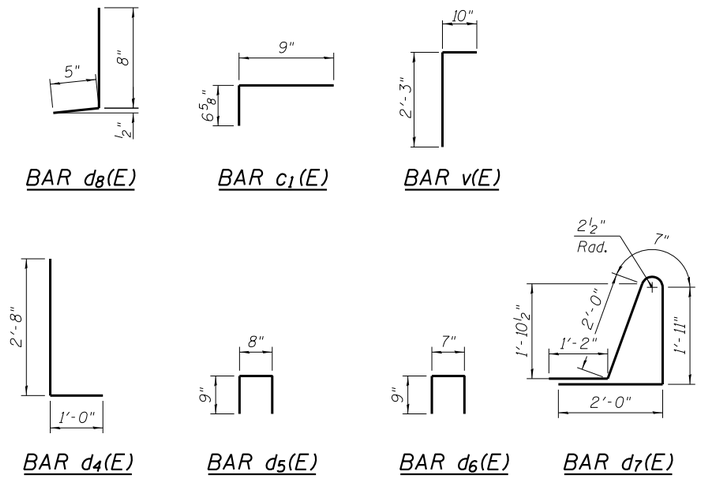

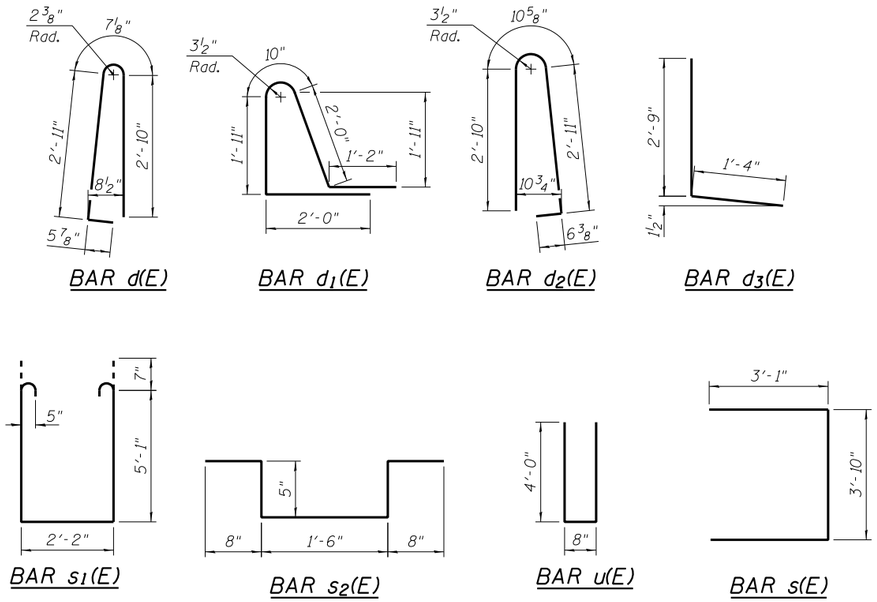

SUPERSTRUCTURE BILL OF MATERIAL

Bar	No.	Size	Length	Shape
a(E)	552	#5	41'-5"	
a_1(E)	507	#5	28'-10"	
a_2(E)	552	#6	6'-6"	
a_3(E)	128	#5	1'-6"	
b(E)	396	#5	34'-0"	
b_1(E)	300	#5	28'-0"	
b_2(E)	40	#4	25'-0"	
c(E)	127	#5	15'-6"	
c_1(E)	254	#5	1'-4"	
d(E)	147	#5	6'-10"	
d_1(E)	139	#5	7'-11"	
d_2(E)	147	#5	7'-2"	
d_3(E)	127	#4	4'-1"	
d_4(E)	127	#6	3'-8"	
d_5(E)	28	#4	2'-2"	
d_6(E)	28	#4	2'-1"	
d_7(E)	139	#5	7'-2"	
d_8(E)	139	#4	1'-1"	
e(E)	40	#4	17'-10"	
e_1(E)	100	#4	17'-8"	
e_2(E)	10	#4	27'-2"	
e_3(E)	8	#8	36'-7"	
m(E)	72	#6	6'-8"	
m_1(E)	64	#6	23'-4"	
m_2(E)	36	#6	4'-1"	
m_3(E)	4	#6	1'-4"	
m_4(E)	8	#6	2'-8"	
m_5(E)	60	#5	4'-0"	
m_6(E)	8	#6	1'-1"	
s(E)	98	#5	10'-0"	
s_1(E)	98	#5	13'-6"	
s_2(E)	500	#4	3'-8"	
u(E)	162	#4	8'-8"	
v(E)	162	#5	3'-1"	
Reinforcement Bars, Epoxy Coated			Lbs.	87,170
Concrete Superstructure			Cu. Yd.	459.8
Protective Coat			Sq. Yd.	619
3/8" Bridge Deck Thin Polymer Overlay			Sq. Yd.	702

FILE NAME = W:\094-010 KDOT LMP Section B\CADD SHEETS\structural\Section B2\LMP over IL31 Bridge\xxx-SHT.13 Superstructure Details.dgn

Bollinger, Lach & Associates, Inc.
ITASCA, ILLINOIS

USER NAME =	DESIGNED - JJI	REVISED
	CHECKED - NS	REVISED
PLOT SCALE =	DRAWN - GM	REVISED
PLOT DATE = 9/28/2017	CHECKED - NS	REVISED

STATE OF ILLINOIS
DEPARTMENT OF TRANSPORTATION

SUPERSTRUCTURE DETAILS
STRUCTURE NO. 045-3048

SHEET NO. 13 OF 49 SHEETS

F.A.U RTE.	SECTION	COUNTY	TOTAL SHEETS	SHEET NO.
2298	16-00215-11-PV	KANE	611	381

CONTRACT NO. 61E05

ILLINOIS FED. AID PROJECT

Notes:
See sheet 15 of 49 for Sections A-A and B-B, and Detail F.
See sheet 16 of 49 for Views C-C & D-D and E-E.
The joint opening shall be determined per Article 520.04 except that on jointless structures, the distance described as the bridge length between the nearest fixed bearings each way from the joint shall be taken as half the bridge length plus the approach slab length. The minimum dimension shall be 1½" for installation purposes.

* Cost included with Concrete Superstructure (Approach Slab).
** Per manufacturer recommendations

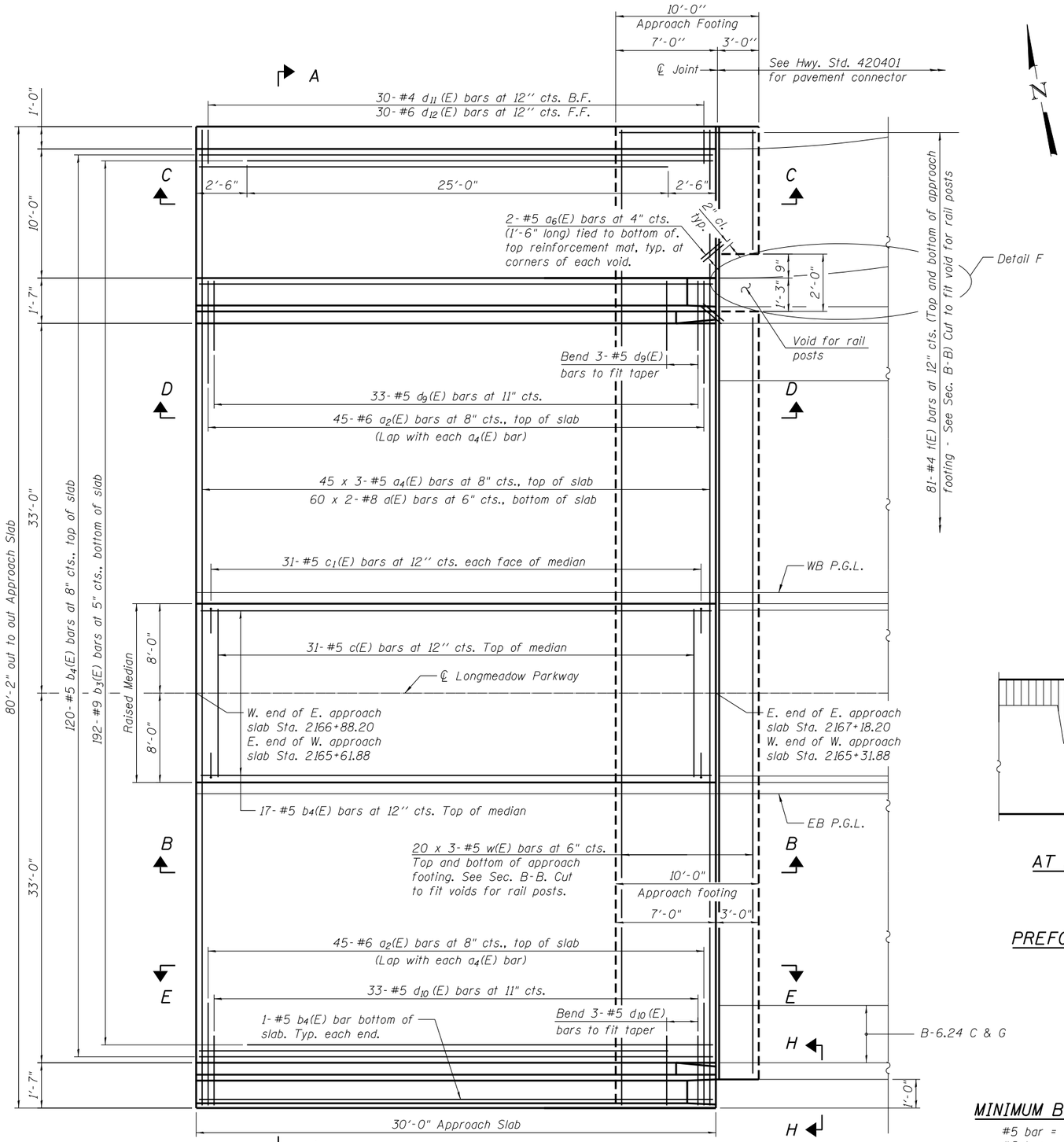

PLAN

(East Approach Slab shown. West Approach similar except as noted)

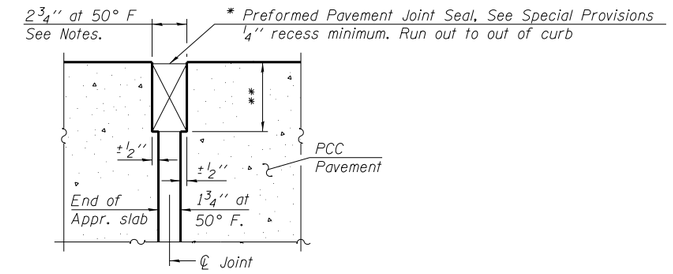

RIGID PAVEMENT

DETAIL A

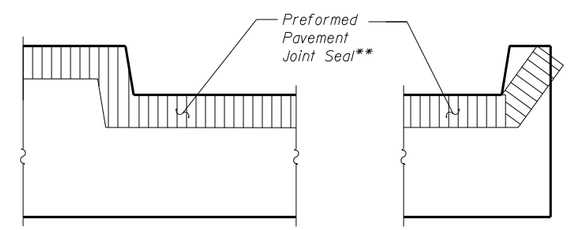

AT MEDIAN

AT CURB

PREFORMED PAVEMENT JOINT SEAL DETAILS

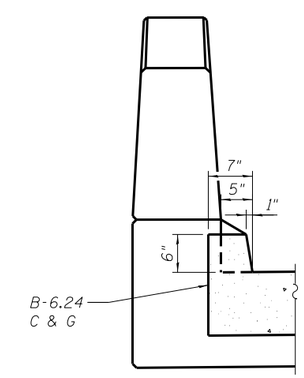

VIEW H-H

MINIMUM BAR LAP

#5 bar = 3'-0"
#8 bar = 4'-9"

(Sheet 1 of 3)

Bollinger, Lach & Associates, Inc. ITASCA, ILLINOIS	USER NAME =	DESIGNED - JJI	REVISED
		CHECKED - NS	REVISED
	PLOT SCALE =	DRAWN - GM	REVISED
	PLOT DATE = 9/28/2017	CHECKED - NS	REVISED

STATE OF ILLINOIS
DEPARTMENT OF TRANSPORTATION

BRIDGE APPROACH SLAB PLAN
STRUCTURE NO. 045-3048

SHEET NO. 14 OF 49 SHEETS

F.A.U RTE.	SECTION	COUNTY	TOTAL SHEETS	SHEET NO.
2298	16-00215-11-PV	KANE	611	382
		CONTRACT NO. 61E05		
		ILLINOIS FED. AID PROJECT		

FILE NAME = W:\894-010 KDOT LMP Section B\CADD SHEETS\Structural\Section B2\LMP over IL31 Bridge\xxx-SHT.14 BRIDGE APP SLAB PLAN.dgn

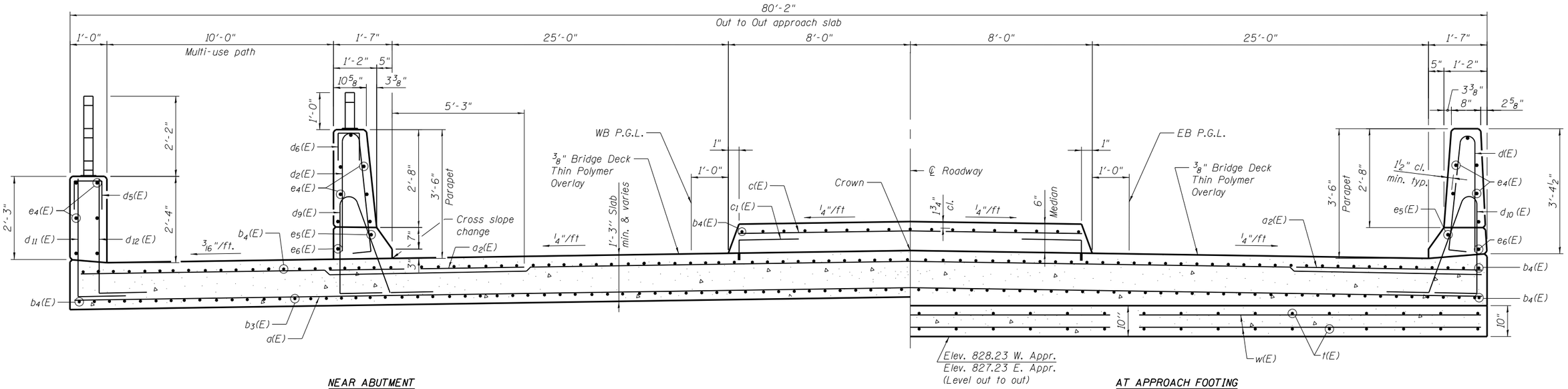

NEAR ABUTMENT

AT APPROACH FOOTING

SECTION A-A

(See Plan for dimensions not shown)

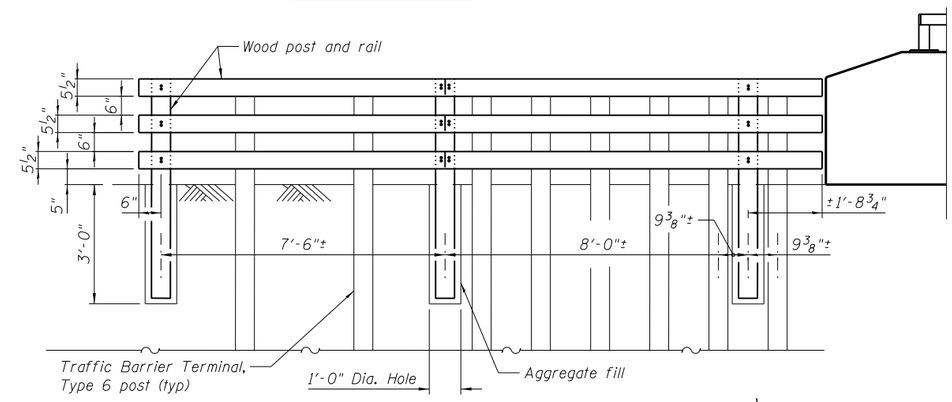

VIEW G-G
WOOD POST AND RAIL FENCE

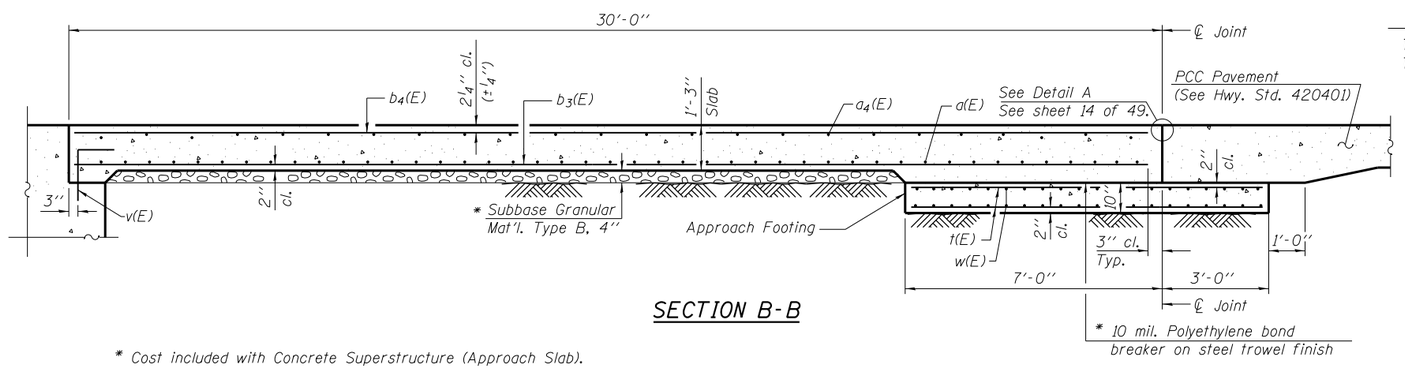

SECTION B-B

* Cost included with Concrete Superstructure (Approach Slab).

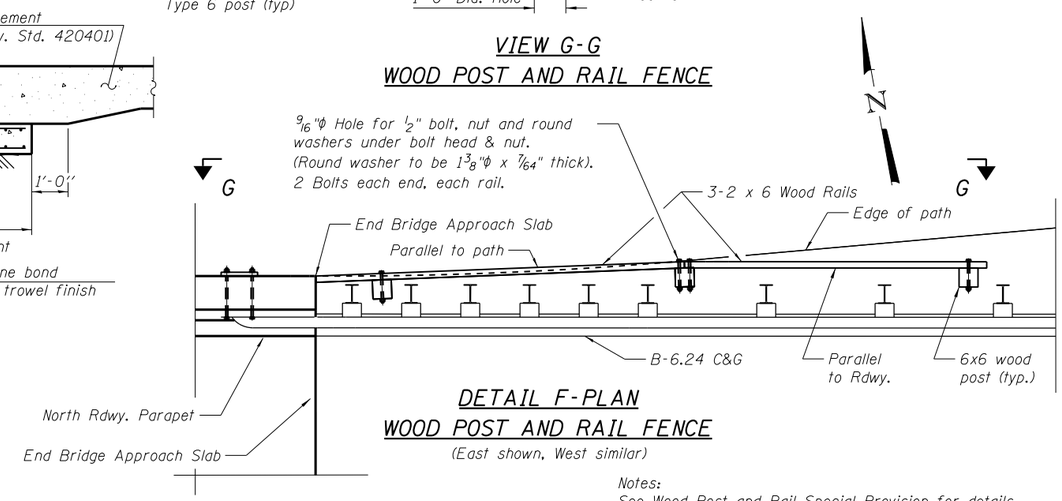

DETAIL F-PLAN
WOOD POST AND RAIL FENCE

(East shown, West similar)

Notes:
See Wood Post and Rail Special Provision for details.

(Sheet 2 of 3)

FILE NAME = W:\894-010 KDOT LMP Section B\CADD SHEETS\structural\Section B2\LMP over IL31 Bridge\xxx-SHT-15 BRIDGE APP SLAB SECT.dgn

Bollinger, Lach & Associates, Inc. ITASCA, ILLINOIS	USER NAME =	DESIGNED - JJI	REVISED
		CHECKED - NS	REVISED
	PLOT SCALE =	DRAWN - GM	REVISED
	PLOT DATE = 9/28/2017	CHECKED - NS	REVISED

STATE OF ILLINOIS
DEPARTMENT OF TRANSPORTATION

BRIDGE APPROACH SLAB SECTIONS
STRUCTURE NO. 045-3048

SHEET NO. 15 OF 49 SHEETS

F.A.U RTE.	SECTION	COUNTY	TOTAL SHEETS	SHEET NO.
2298	16-00215-11-PV	KANE	611	383
		CONTRACT NO. 61E05		
		ILLINOIS FED. AID PROJECT		

Notes:

Approach slab and parapet concrete shall be paid for as Concrete Superstructure.
Approach footing concrete shall be paid for as Concrete Structures.
Reinforcement shall be paid for as Reinforcement Bars, Epoxy Coated.
The approach footing maximum applied service bearing pressure (Qmax) = 2.0 ksf.
Cost of excavation for approach footing included with Concrete Structures
See sheet 13 of 49 for c(E), d(E), d_2(E), d_5(E) and d_6(E) bar bending diagrams.
Bars indicated thus 25 x 2-#4 etc. indicates 25 lines of bars with 2 lengths per line.
See sheet 14 of 49 for View H-H.

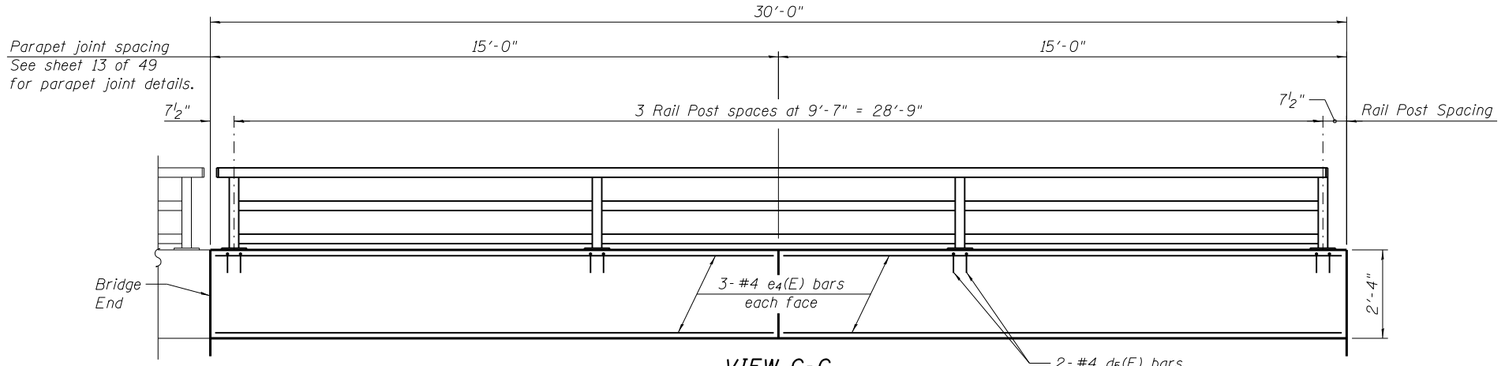

VIEW C-C

(Inside elevation of east approach north sidewalk parapet)
(West approach similar)

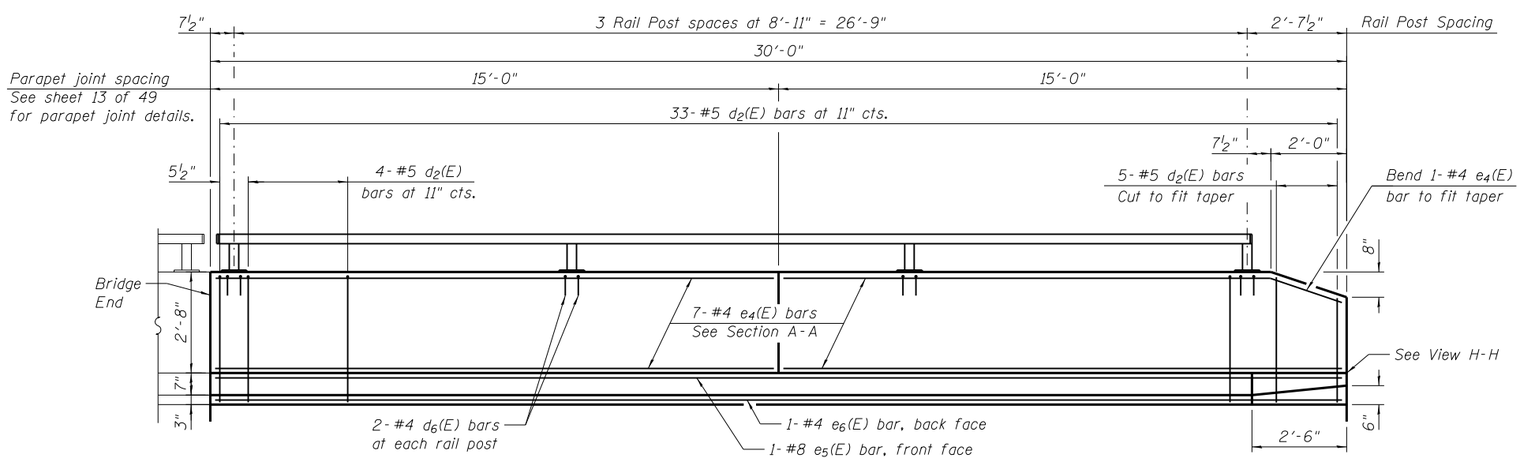

VIEW D-D

(Inside elevation of east approach north roadway parapet)
(West approach similar)

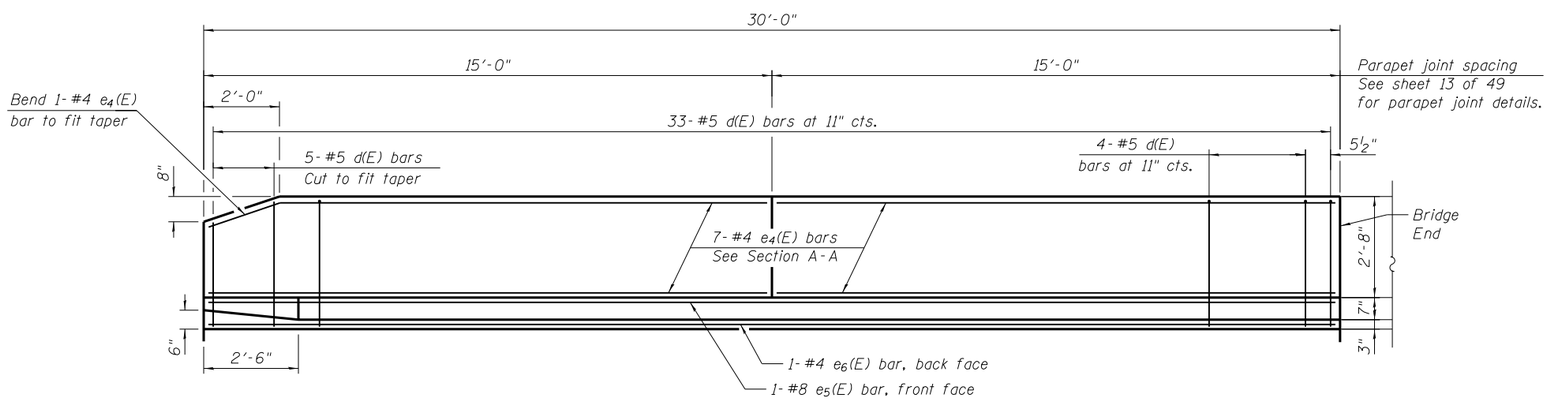

VIEW E-E

(Inside elevation of east approach south roadway parapet)
(West approach similar)

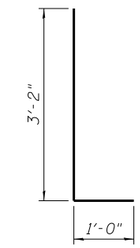

BAR d_{11}(E) & d_{12}(E)

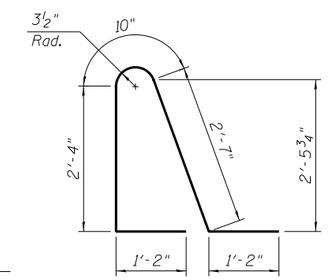

BAR d_9(E)

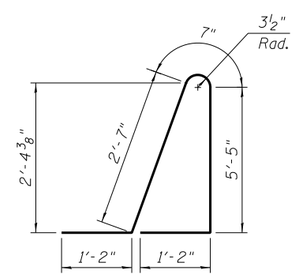

BAR d_{10}(E)

TWO APPROACHES
BILL OF MATERIAL

Bar	No.	Size	Length	Shape
a(E)	240	#8	42'-4"	
a_2(E)	180	#6	6'-6"	
a_4(E)	270	#5	28'-8"	
a_6(E)	8	#5	1'-6"	
b_3(E)	384	#9	29'-8"	
b_4(E)	278	#5	29'-8"	
c(E)	62	#5	15'-7"	
c_1(E)	124	#5	1'-4"	
d(E)	84	#5	7'-2"	
d_2(E)	84	#5	6'-10"	
d_5(E)	16	#4	2'-2"	
d_6(E)	16	#4	2'-1"	
d_9(E)	66	#5	8'-1"	
d_{10}(E)	66	#5	10'-11"	
d_{11}(E)	60	#4	4'-2"	
d_{12}(E)	60	#6	4'-2"	
e_4(E)	80	#4	14'-8"	
e_5(E)	4	#8	29'-8"	
e_6(E)	4	#4	29'-8"	
f(E)	324	#4	9'-8"	
w(E)	240	#5	28'-6"	
Concrete Structures			Cu. Yd.	49.5
Concrete Superstructure			Cu. Yd.	39.1
Protective Coat			Sq. Yd.	295
Concrete Superstructure (Approach Slab)			Cu. Yd.	236.6
Reinforcement Bars, Epoxy Coated			Pound	99,020
⅜" Bridge Deck Thin Polymer Overlay			Sq. Yd.	334
Wood Post and Rail Fence			Foot	32

(Sheet 3 of 3)

FILE NAME = W:\894-010 KDOT LMP Section B\CADD SHEETS\structural\Section B2\LMP over IL31 Bridge\xxx-SHT-16 BridgeAppDet.dgn

Bollinger, Lach & Associates, Inc.
ITASCA, ILLINOIS

USER NAME =	DESIGNED - JJI	REVISED	
	CHECKED - NS	REVISED	
PLOT SCALE =	DRAWN - GM	REVISED	
PLOT DATE = 9/28/2017	CHECKED - NS	REVISED	

STATE OF ILLINOIS
DEPARTMENT OF TRANSPORTATION

BRIDGE APPROACH SLAB DETAILS
STRUCTURE NO. 045-3048

SHEET NO. 16 OF 49 SHEETS

F.A.U RTE.	SECTION	COUNTY	TOTAL SHEETS	SHEET NO.
2298	16-00215-11-PV	KANE	611	384

CONTRACT NO. 61E05

ILLINOIS FED. AID PROJECT

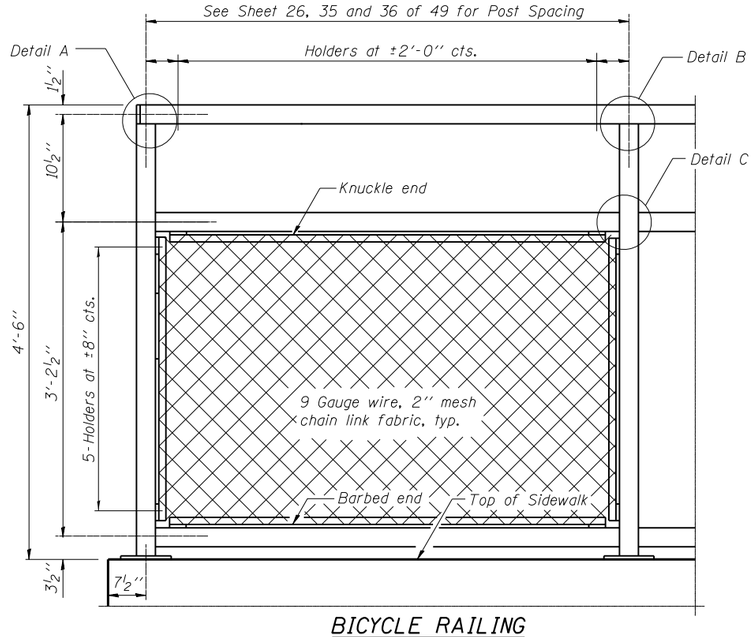

BICYCLE RAILING

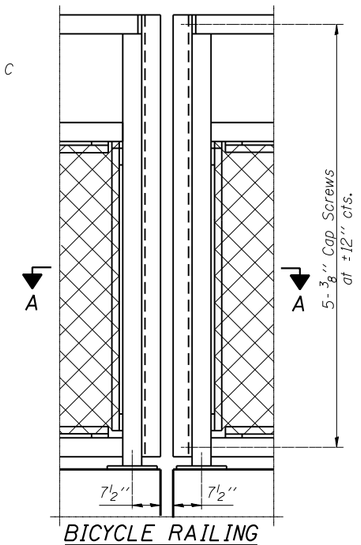

BICYCLE RAILING

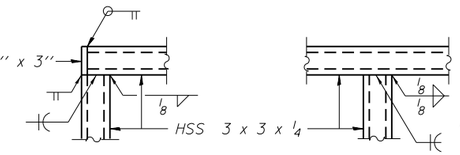

DETAIL A DETAIL B

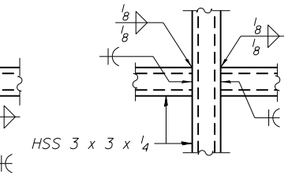

DETAIL C

Note:
All post, railing, splices, anchor devices, and bent plates shall be completely shop painted using Organic Zinch-Rich Paint System. The color of the final finish coat shall be Semi-Gloss Dark Bronze. Submit paint chip to the Engineer for approval prior to painting. See Standard Specificatons for "Cleaning and Painting New Metal Structures" and "Organic Zinc-Rich Paint System".
The Engineer shall inspect the shop applied paint system for handling damage prior to installation and either accept or reject the painted railing. All rejected railing will require the complete reapplication of the shop applied Organic Zinc-Rich Paint System All erection and handling damage damage to the shop applied paint system on accepted railing shall be repaired in accordance with the Standard Specification "Cleaning and Painting New Metal Structures"
* See note below.

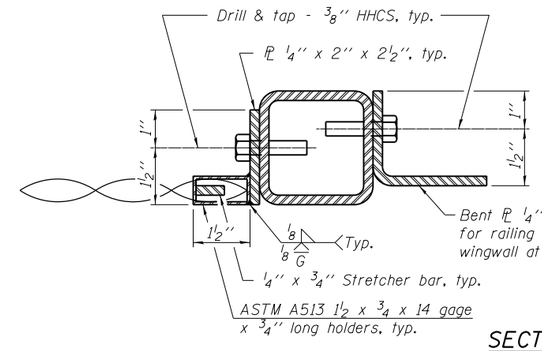

SECTION A-A

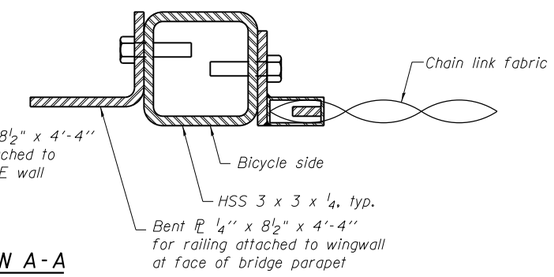

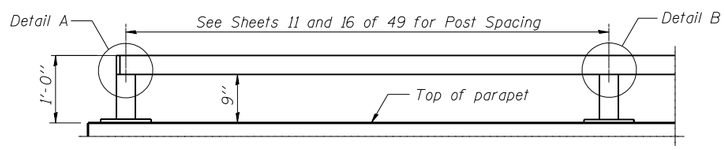

PARAPET RAILING ELEVATION
(Inside Face of One Element Rail)

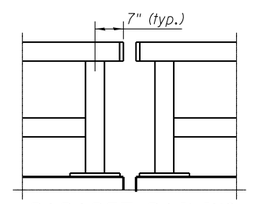

PARAPET RAILING ELEVATION AT EXPANSION JOINT
(Two Element Rail Shown - One and Three Element Rail Similar)

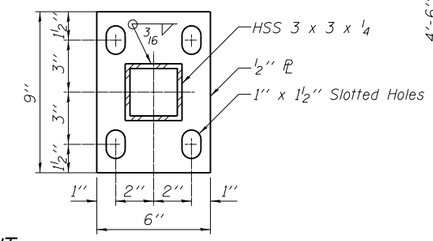

BASE PL

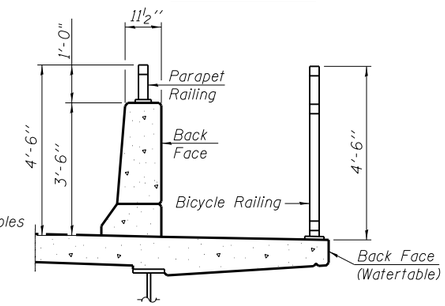

SECTION THRU DECK

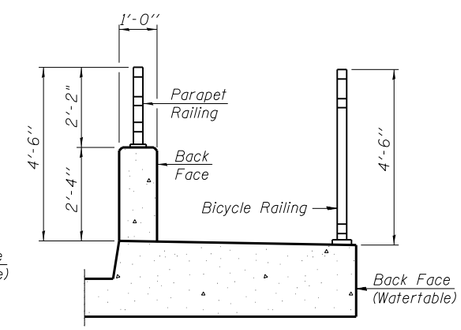

SECTION THRU SIDEWALK

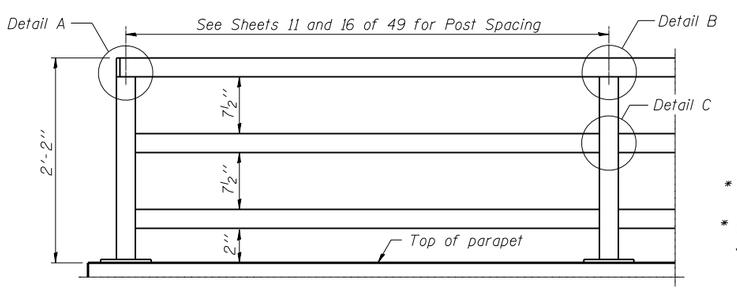

PARAPET RAILING ELEVATION
(Inside Face of Three Element Rail)

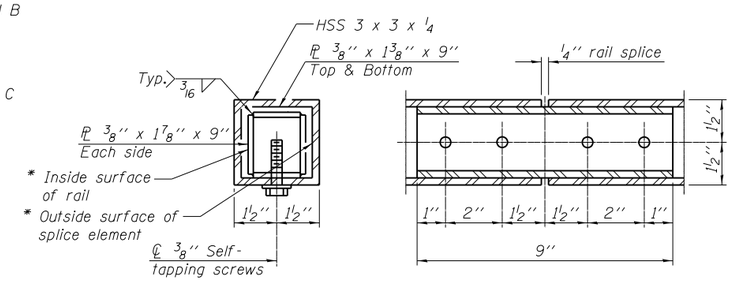

RAIL SPLICE

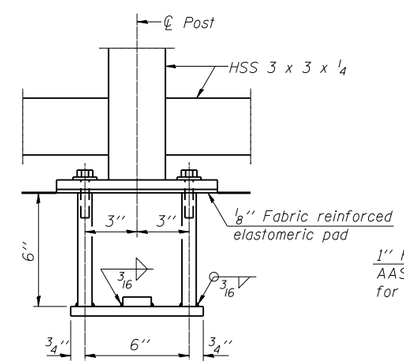

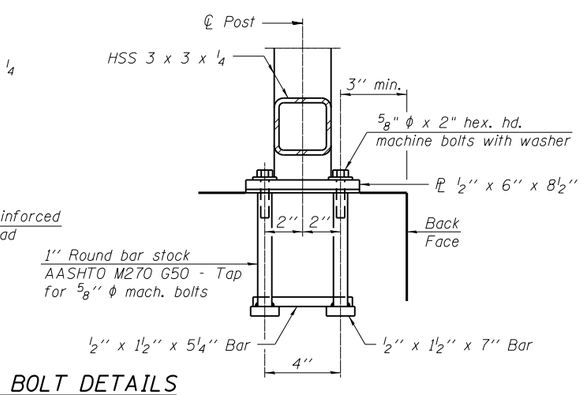

ANCHOR BOLT DETAILS

In lieu of the cast-in-place anchor device shown, the Contractor has the option of drilling and setting ⅝" ϕ anchor rods according to Article 509.06 of the Standard Specifications. Embedment shall be according to the manufacturer's specifications.

Note:
All structural steel tubing, post and railing, for parapet railing shall be CVN tested according to 1006.34(b) of the Standard Specifications.
CVN testing may be omitted for the bicycle railing.

* At rail splices, the inside surfaces of the rail and outside surfaces of the splice elemant shall be completely painted with the shop applied 3-coat paint system for a minimum of 4" each side of the splice.

BILL OF MATERIAL

Item	Unit	Quantity
Bicycle Railing	Foot	458
Parapet Railing	Foot	362

(10'-0" Maximum Post Spacing)

FILE NAME = W:\894-010 KDOT LMP Section B\CADD SHEETS\structural\Section B2\LMP over IL31 Bridge\xxx-SHT-17 Bicycle Railing.dgn

Bollinger, Lach & Associates, Inc.
ITASCA, ILLINOIS

USER NAME =	DESIGNED - JJI	REVISED	
	CHECKED - NS	REVISED	
PLOT SCALE =	DRAWN - GM	REVISED	
PLOT DATE = 9/28/2017	CHECKED - NS	REVISED	

STATE OF ILLINOIS
DEPARTMENT OF TRANSPORTATION

BICYCLE RAILING
STRUCTURE NO. 045-3048

SHEET NO. 17 OF 49 SHEETS

F.A.U RTE.	SECTION	COUNTY	TOTAL SHEETS	SHEET NO.
2298	16-00215-11-PV	KANE	611	385

CONTRACT NO. 61E05

ILLINOIS FED. AID PROJECT

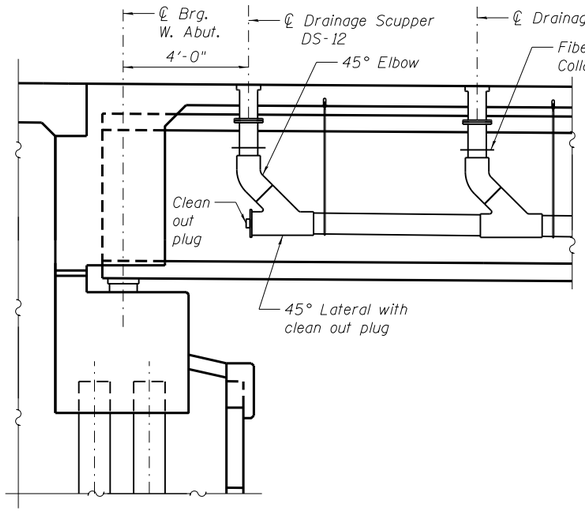

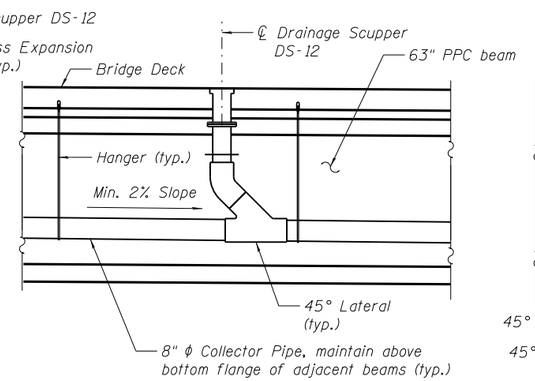

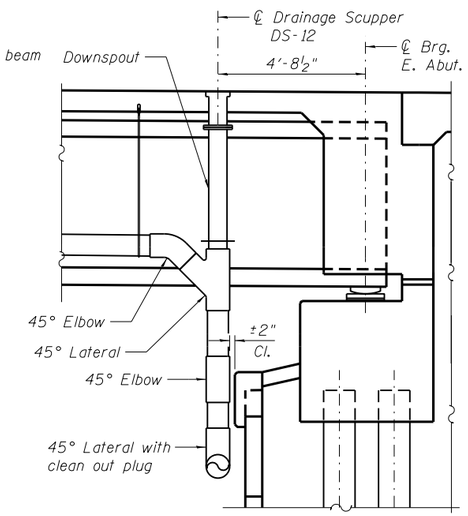

SECTION A-A
ELEVATION NORTH COLLECTOR
(Looking North, South Collector similar)

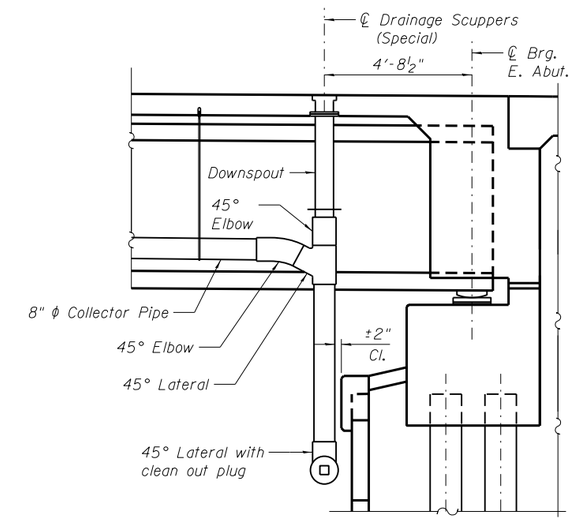

SECTION B-B
(South Collector at East Abut.)

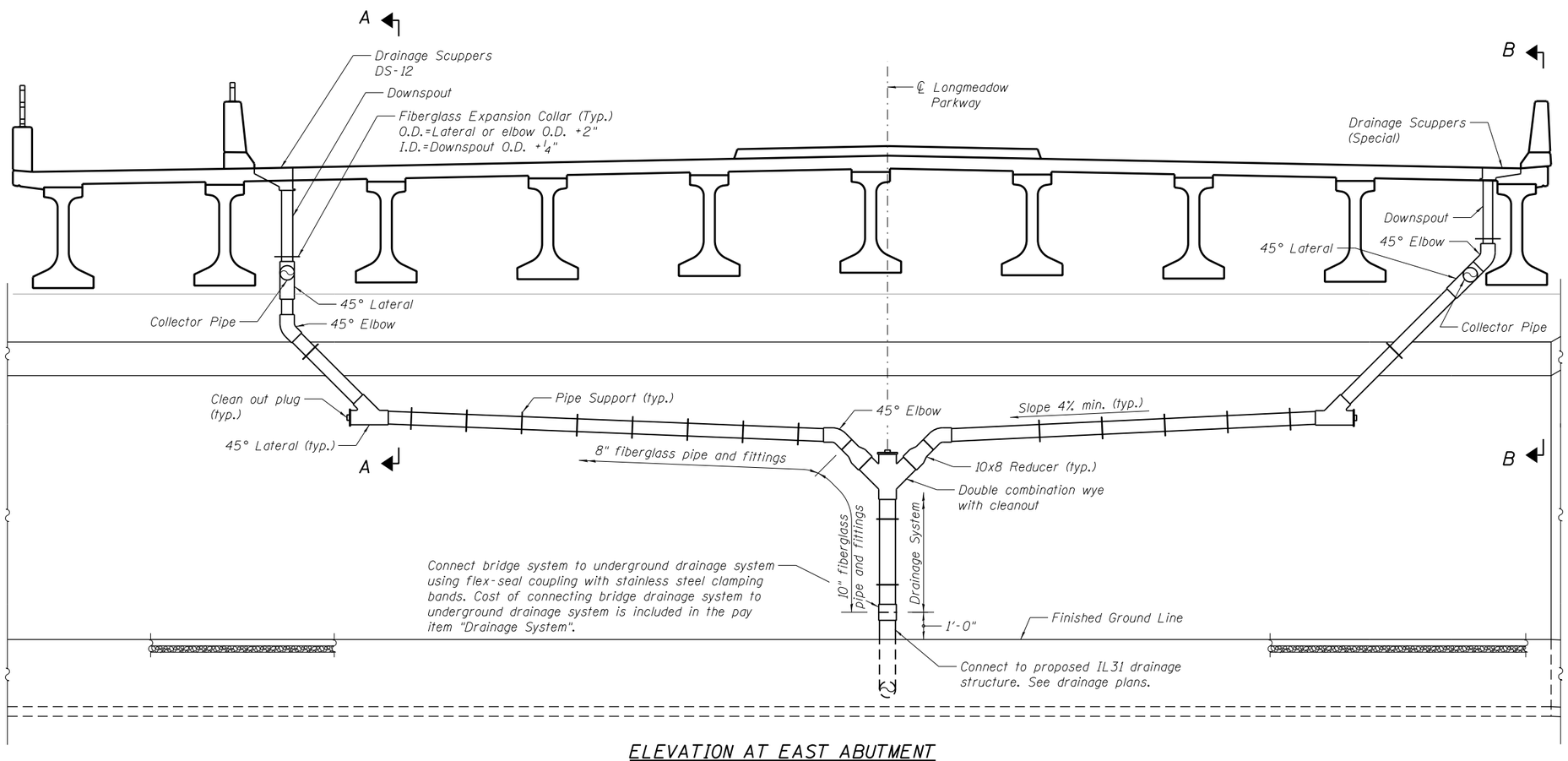

ELEVATION AT EAST ABUTMENT
(Looking East)

NOTES:

For pipe and fitting requirements see "Drainage System" Special Provision.

Downspouts shall extend a minimum of 1" into fittings.

Scuppers and Drainage System shall be located clear of all cross frames. The costs of custom fittings required for the collector pipes to clear cross frames are included in the Drainage System item.

The Contractor shall submit shop drawings showing details of the drainage system, including downspouts and downspout lengths determined by the Contractor, to the Engineer and obtain the Engineer's approval before any fabrication is begun. Cost included in Drainage System.

BILL OF MATERIAL

Item	Unit	Total
Drainage System	L Sum	1

FILE NAME = W:\894-010 KDOT LMP Section B\CADD SHEETS\structural\Section B2\LMP over IL31 Bridge\xxx-SHT-18 Bridge Drainage System.dgn

Bollinger, Lach & Associates, Inc.
ITASCA, ILLINOIS

USER NAME =	DESIGNED - JJI	REVISED	
	CHECKED - NS	REVISED	
PLOT SCALE =	DRAWN - GM	REVISED	
PLOT DATE = 9/28/2017	CHECKED - NS	REVISED	

STATE OF ILLINOIS
DEPARTMENT OF TRANSPORTATION

BRIDGE DRAINAGE SYSTEM
STRUCTURE NO. 045-3048
SHEET NO. 18 OF 49 SHEETS

F.A.U RTE.	SECTION	COUNTY	TOTAL SHEETS	SHEET NO.
2298	16-00215-11-PV	KANE	611	386

CONTRACT NO. 61E05
ILLINOIS FED. AID PROJECT

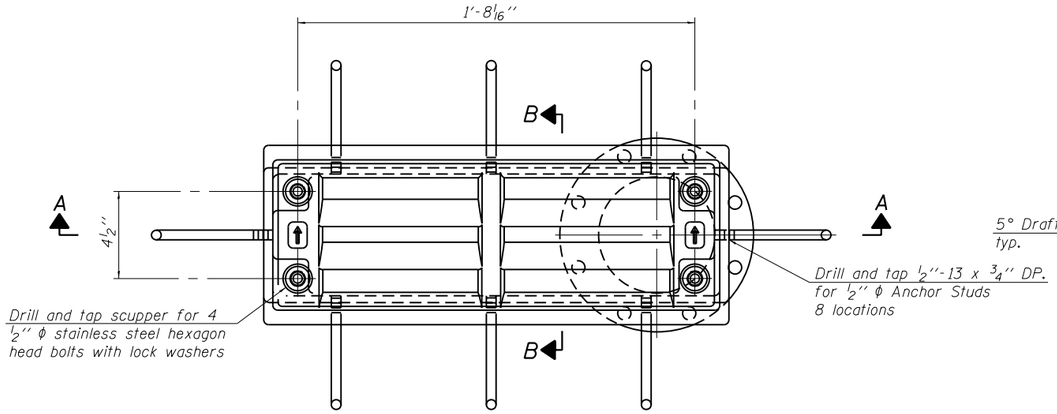

PLAN

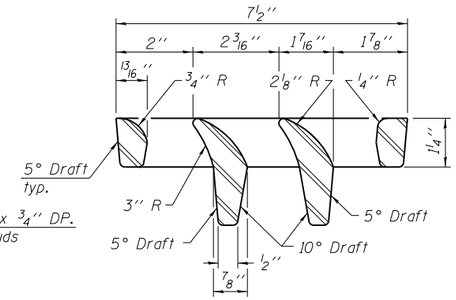

VANE GRATE DETAIL

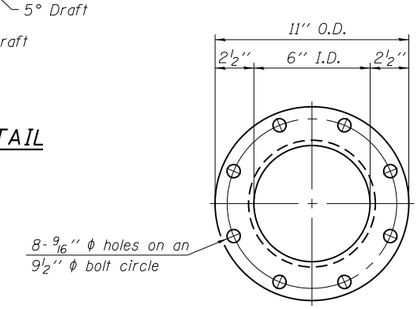

Notes:

All cast iron parts shall be gray iron conforming to the requirements of AASHTO M 105, Class 35B.

Bolts, anchor studs, washers and nuts shall conform to the requirements of ASTM A 307 and shall be galvanized according to AASHTO M 232.

Downspouts located on the exterior side of a painted steel fascia beam shall be painted with the finish coat specified for the exterior side of the fascia beam.

As an alternate, bolts, anchor studs, washers and nuts may be stainless steel according to Article 1006.29(d) of the Standard Specifications.

Structural steel weldments of equal sections and of the same configuration may be substituted for the cast iron scupper frame. Fillet or full penetration welds shall be used for the weldments. Details shall be submitted to the Engineer for approval. Structural steel weldments shall not be substituted for the cast iron scupper grate. Structural steel frames and downspouts shall be galvanized according to AASHTO M111.

The Contractor shall take appropriate measures to assure that Protective Coat is not applied to the scupper.

Cost of the Grate, Frame, Downspout, Anchor Studs, Bolts, Washers and Nuts including complete installation of the scupper shall be paid for at the contract unit price each for Drainage Scupper, DS-12.

Alternate fiberglass downspout conforming to ASTM D 2996 with a short-time rupture strength hoop tensile stress of 30,000 psi min. may be used in lieu of the cast iron or steel equivalent.

* Length Varies. See Drainage System Notes on sht. 18 of 49.

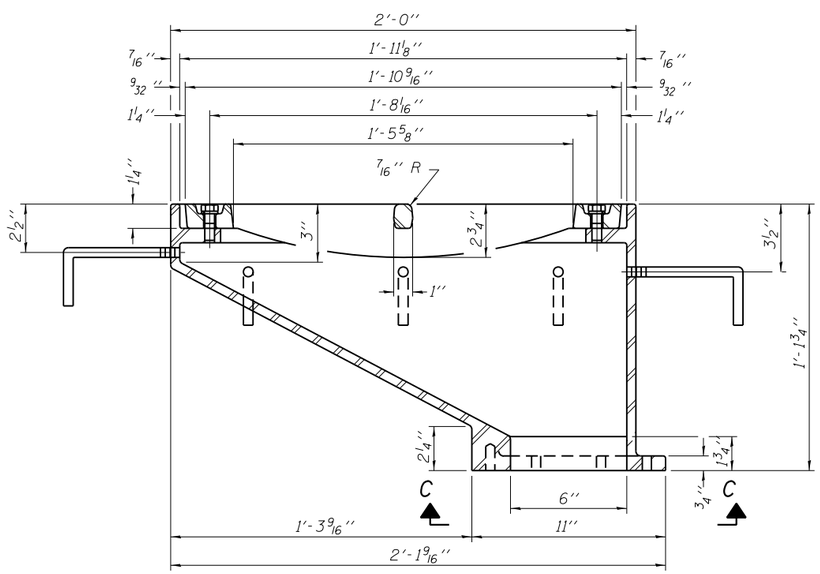

SECTION A-A

See sheet 8 of 49 for scupper location relative to parapet.

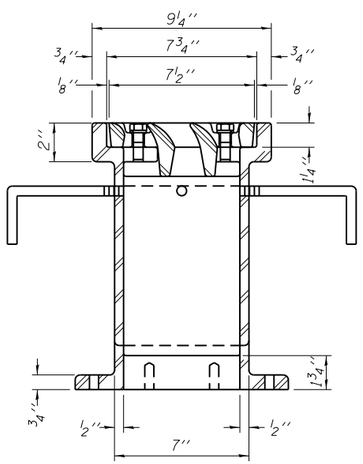

SECTION B-B

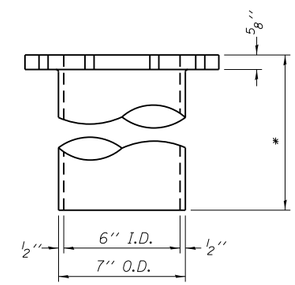

DOWNSPOUT

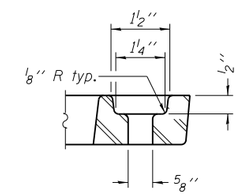

BOLT HOLE DETAIL

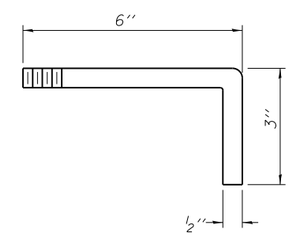

ANCHOR STUD DETAIL

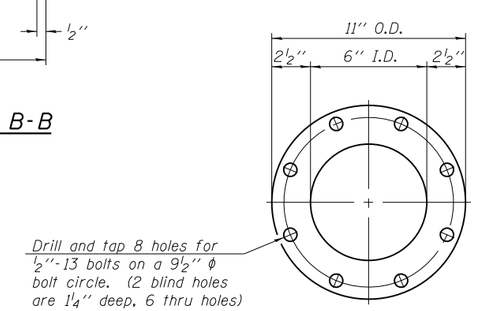

VIEW C-C

BILL OF MATERIAL

ITEM	UNIT	QUANTITY
Drainage Scupper, DS-12	Each	8

DS-12 7-1-10

FILE NAME = W:\894-010 KDOT LMP Section B\CADD SHEETS\structural\Section B2\LMP over IL31 Bridge\xxx-SHT.19 DRAINAGE SCUPPER, DS-12.dgn

Bollinger, Lach & Associates, Inc.
ITASCA, ILLINOIS

USER NAME =	DESIGNED - JJI	REVISED	
	CHECKED - NS	REVISED	
PLOT SCALE =	DRAWN - GM	REVISED	
PLOT DATE = 9/28/2017	CHECKED - NS	REVISED	

STATE OF ILLINOIS
DEPARTMENT OF TRANSPORTATION

DRAINAGE SCUPPER, DS-12
STRUCTURE NO. 045-3048

SHEET NO. 19 OF 49 SHEETS

F.A.U RTE.	SECTION	COUNTY	TOTAL SHEETS	SHEET NO.
2298	16-00215-11-PV	KANE	611	387

CONTRACT NO. 61E05

ILLINOIS FED. AID PROJECT

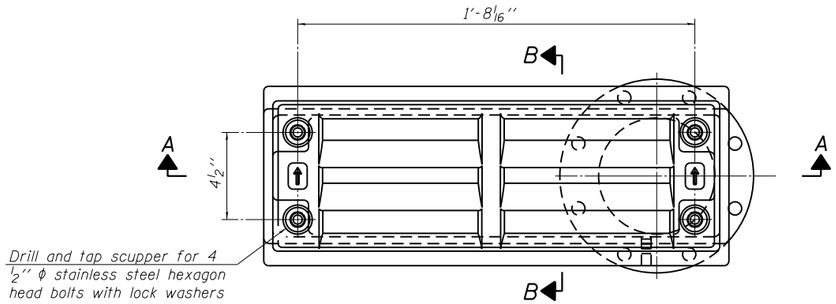

PLAN

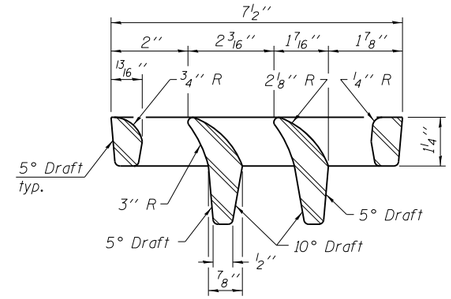

VANE GRATE DETAIL

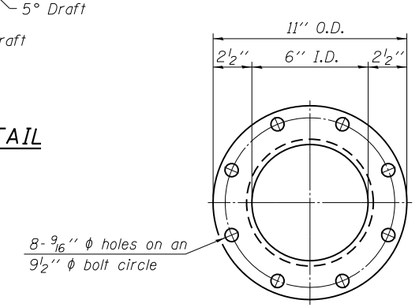

Notes:

All cast iron parts shall be gray iron conforming to the requirements of AASHTO M 105, Class 35B.

Bolts, anchor studs, washers and nuts shall conform to the requirements of ASTM A 307 and shall be galvanized according to AASHTO M 232.

As an alternate, bolts, anchor studs, washers and nuts may be stainless steel according to Article 1006.29(d) of the Standard Specifications.

Structural steel weldments of equal sections and of the same configuration may be substituted for the cast iron scupper frame. Fillet or full penetration welds shall be used for the weldments. Details shall be submitted to the Engineer for approval. Structural steel weldments shall not be substituted for the cast iron scupper grate. Structural steel frames and downspouts shall be galvanized according to AASHTO M111.

The Contractor shall take appropriate measures to assure that Protective Coat is not applied to the scupper.

Cost of the Grate, Frame, Downspout, Anchor Studs, Bolts, Washers and Nuts including complete installation of the scupper shall be paid for at the contract unit price each for Drainage Scuppers, (Special).

Alternate fiberglass downspout conforming to ASTM D 2996 with a short-time rupture strength hoop tensile stress of 30,000 psi min. may be used in lieu of the cast iron or steel equivalent.

Scupper shall be R-4014-T2L fabricated by Neenah Foundry or an approved equal.

* Length Varies. See Drainage System Notes on sht. 18 of 49.

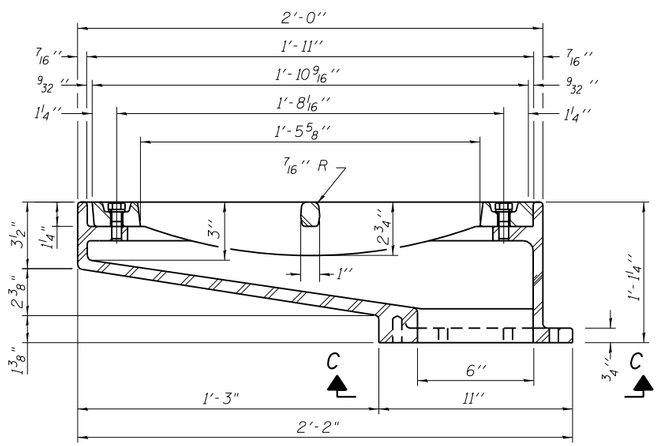

SECTION A-A

See sheet 8 of 49 for scupper location relative to parapet.

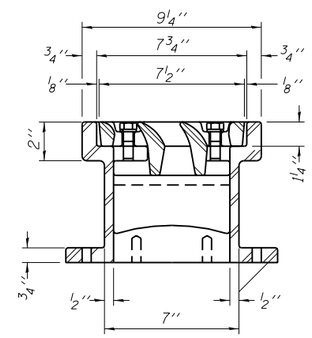

SECTION B-B

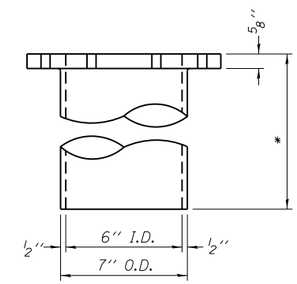

DOWNSPOUT

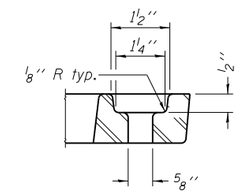

BOLT HOLE DETAIL

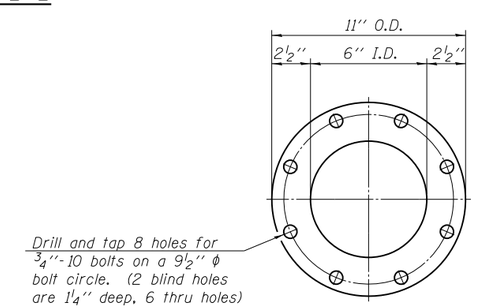

VIEW C-C

BILL OF MATERIAL

ITEM	UNIT	QUANTITY
Drainage Scuppers, (Special)	Each	8

FILE NAME = W:\094-010 KDOT LMP Section B\CADD SHEETS\structural\Section B2\LMP over IL31 Bridge\xxx-SHT.20 DRAINAGE SCUPPER.dgn

Bollinger, Lach & Associates, Inc.
ITASCA, ILLINOIS

USER NAME =	DESIGNED - JJI	REVISED
	CHECKED - NS	REVISED
PLOT SCALE =	DRAWN - GM	REVISED
PLOT DATE = 9/28/2017	CHECKED - NS	REVISED

STATE OF ILLINOIS
DEPARTMENT OF TRANSPORTATION

DRAINAGE SCUPPER
STRUCTURE NO. 045-3048

SHEET NO. 20 OF 49 SHEETS

F.A.U RTE.	SECTION	COUNTY	TOTAL SHEETS	SHEET NO.
2298	16-00215-11-PV	KANE	611	388
		CONTRACT NO. 61E05		
		ILLINOIS FED. AID PROJECT		

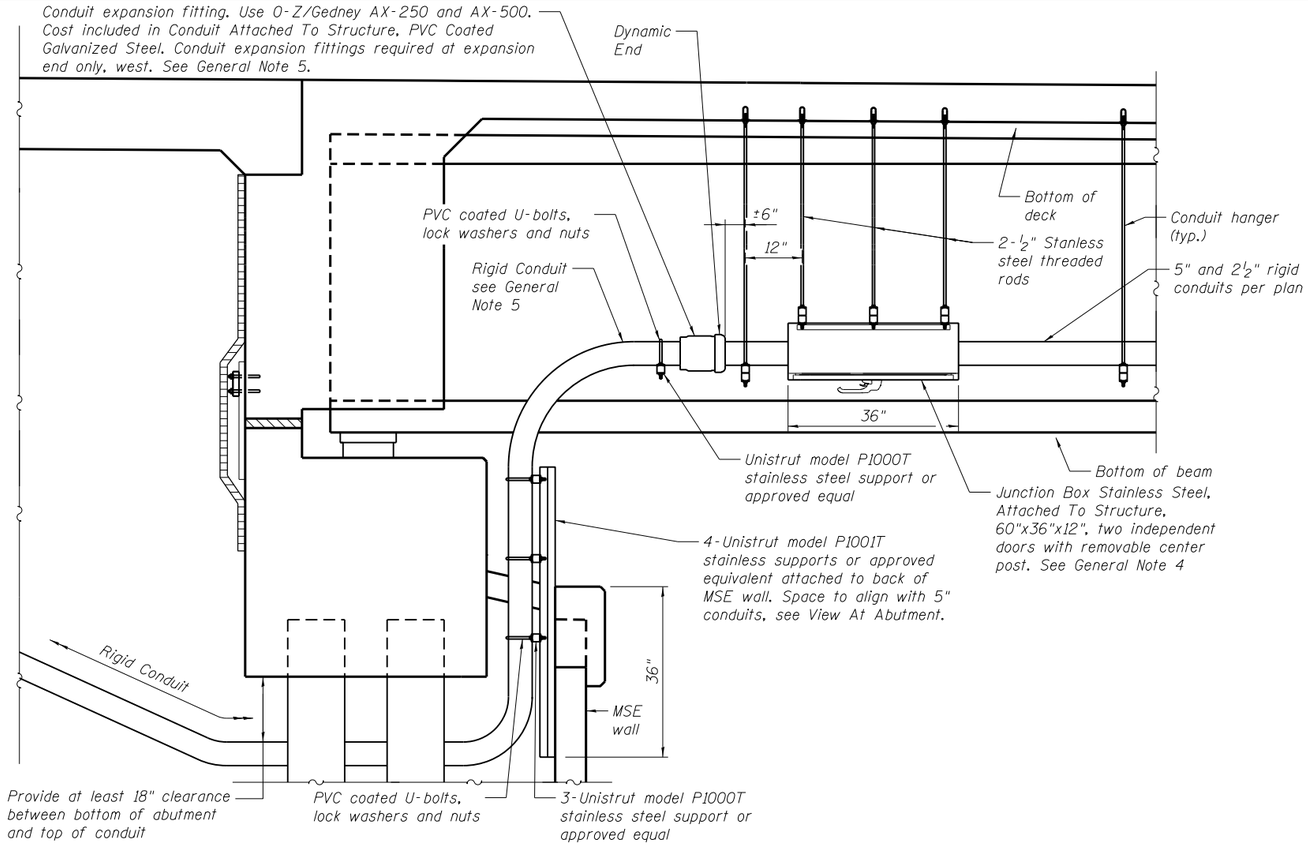

DETAIL AT ABUTMENT - BRIDGE MOUNTED JUNCTION BOX

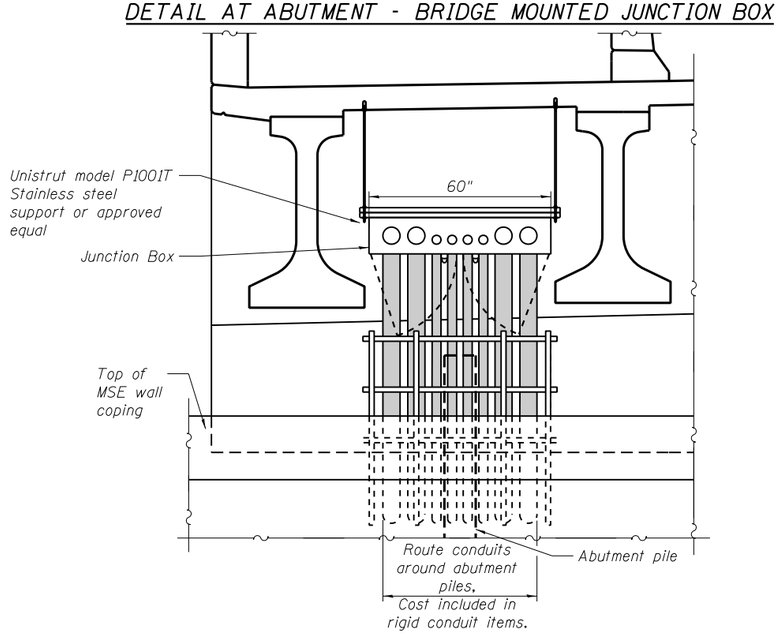

VIEW AT ABUTMENT

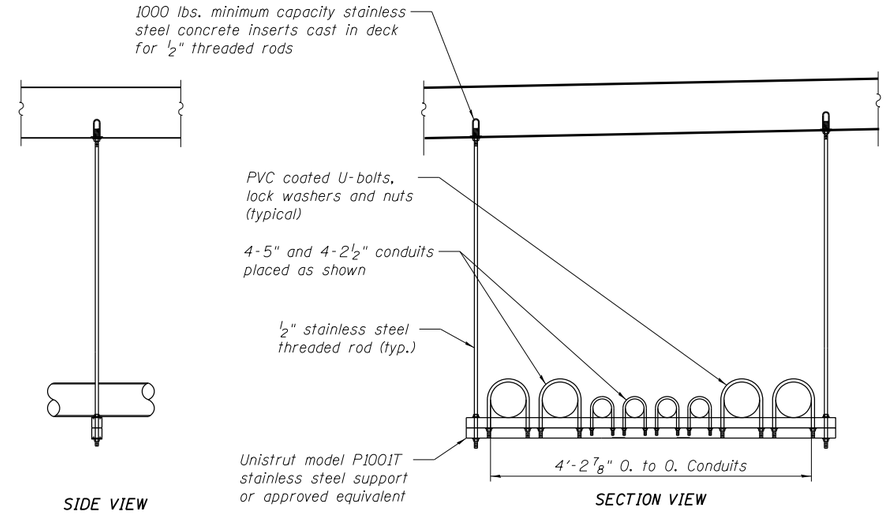

CONDUIT HANGER ASSEMBLY DETAIL

HANGER NOTES:

1. Conduit shall be supported at a maximum interval per the Standard Specifications, except as noted. Supports shall be located a maximum of 3' away from any connection.
2. All hardware shall be stainless steel unless noted otherwise.
3. The electrical contractor shall coordinate the location of the concrete inserts with the bridge contractor.
4. The cost of the concrete inserts shall be included in the cost of Conduit Attached To Structure, PVC Coated Galvanized Steel.
5. Conduits shall be centered between the beams.
6. Conduits shall not come into contact with any cross bracing or other structural members.
7. Provide 1" minimum clearance to all structural members.

GENERAL NOTES:

1. The contractor shall furnish & install a pull tape from junction box to junction box.
2. Do not drill deck. use installed hanger inserts.
3. All hardware shall be stainless steel in accordance with article 1006.31 of the Standard Specifications.
4. The Junction boxes shall meet the requirements of Article 1088.04 of the Standard Specifications. Hinged doors and provisions for 3-point lock and a pad-lock are required. Junction boxes are required at both abutments. Provide 3 removable cross bars in cabinet for cable support.
5. 24 inch radius rigid conduit 90 degree elbow shown for 5 inch conduit. Liquid tight flexible nonmetallic conduit my be used for 2½" conduits in place of expansion fitting and elbow as approved by the Engineer.
6. Flexible conduit shall be limited to a maximum length of 5'.
7. The Contractor shall submit shop drawings showing details of the exposed raceway system, including junction boxes, to the Engineer and obtain the Engineer's approval before ordering any material. Cost included in the Conduit Attached to Structure items.
8. Pay limits for conduit attached to Structure are from double hand hole to double hand hole. See Interconnect plans.

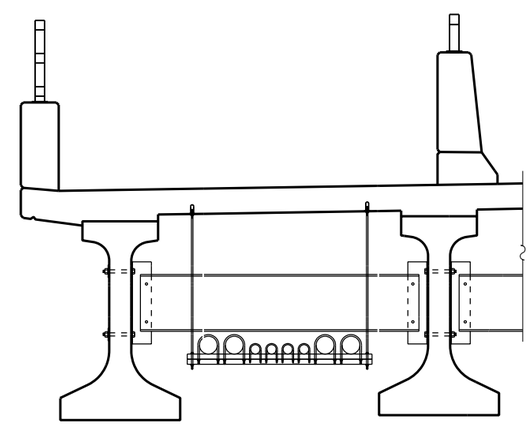

CONDUIT ROUTING THROUGH CROSS FRAME

BILL OF MATERIAL

Item	Unit	Total
Conduit attached to Structure, 2½" Dia. PVC Coated Galvanized Steel	Foot	886
Conduit attached to Structure, 5" Dia. PVC Coated Galvanized Steel	Foot	886
Junction Box, Stainless Steel, attached to Structure, 60" x 36" x 12"	Each	2

FILE NAME = W:\894-010 KDOT LMP Section B\CADD SHEETS\structural\Section B2\LMP over IL31 Bridge\xxx-SHT.21 CONDIT DET AT SEMI-INTEGRAL ABUT BRIDGE.dgn

Bollinger, Lach & Associates, Inc.
ITASCA, ILLINOIS

USER NAME =	DESIGNED - JJI	REVISED
	CHECKED - NS	REVISED
PLOT SCALE =	DRAWN - GM	REVISED
PLOT DATE = 9/28/2017	CHECKED - NS	REVISED

STATE OF ILLINOIS
DEPARTMENT OF TRANSPORTATION

CONDUIT DETAILS AT SEMI-INTEGRAL ABUTMENT BRIDGE
STRUCTURE NO. 045-3048

SHEET NO. 21 OF 49 SHEETS

F.A.U RTE.	SECTION	COUNTY	TOTAL SHEETS	SHEET NO.
2298	16-00215-11-PV	KANE	611	389

CONTRACT NO. 61E05

ILLINOIS FED. AID PROJECT

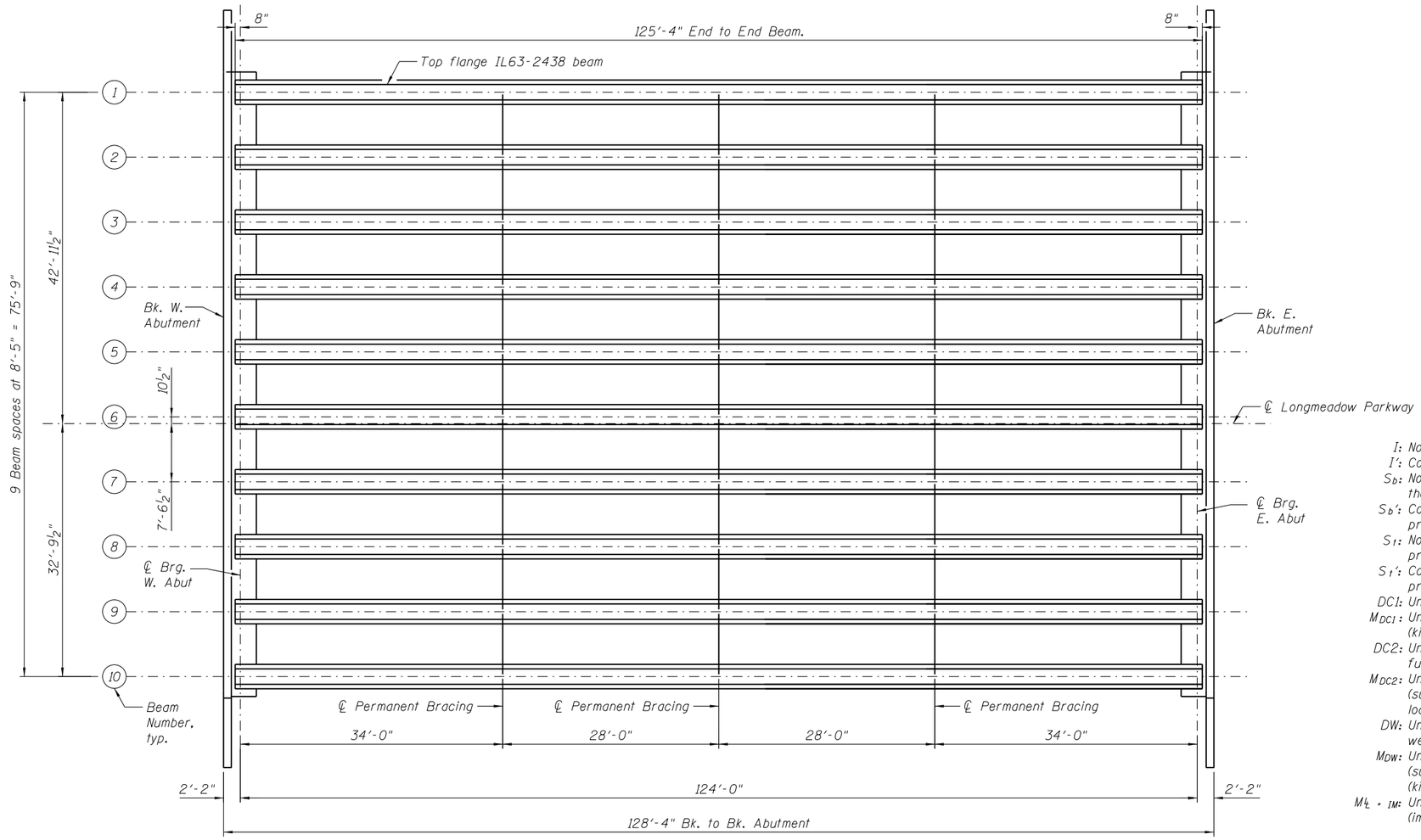

FRAMING PLAN

N

I: Non-composite moment of inertia of beam section (in.^{4}).
I': Composite moment of inertia of beam section (in.^{4}).
S_b: Non-composite section modulus for the bottom fiber of the prestressed beam (in.^{3}).
S_b': Composite section modulus for the bottom fiber of the prestressed beam (in.^{3}).
S_t: Non-composite section modulus for the top fiber of the prestressed beam (in.^{3}).
S_t': Composite section modulus for the top fiber of the prestressed beam (in.^{3}).
DC1: Un-factored non-composite dead load (kips/ft.).
M_{DC1}: Un-factored moment due to non-composite dead load (kip-ft.).
DC2: Un-factored long-term composite (superimposed excluding future wearing surface) dead load (kips/ft.).
M_{DC2}: Un-factored moment due to long-term composite (superimposed excluding future wearing surface) dead load (kip-ft.).
DW: Un-factored long-term composite (superimposed future wearing surface only) dead load (kips/ft.).
M_{DW}: Un-factored moment due to long-term composite (superimposed future wearing surface only) dead load (kip-ft).
M_{LL+IM}: Un-factored live load moment plus dynamic load allowance (impact) (kip-ft.).

INTERIOR BEAM MOMENT TABLE		
		0.5 Span
I	(in^4)	441,689
I'	(in^4)	1,054,021
S_b	(in^3)	17,294
S_b'	(in^3)	25,658
S_t	(in^3)	11,790.9
S_t'	(in^3)	48,084
DC1	(k/')	1.84
M_{DC1}	('k)	3,537
DC2	(k/')	0.27
M_{DC2}	('k)	519
DW	(k/')	0.26
M_{DW}	('k)	500
LLDF		0.697
M_{LL+IM}	('k)	2,667

BEAM REACTION TABLE			
		Abutment	
		Interior	Exterior (Bm 10)
LLDF		0.844	0.551
R_{DC1}	(k)	114.1	99.0
R_{DC2}	(k)	48.5	39.4
R_{DW}	(k)	16.1	16.1
R_{LL}	(k)	89.2	58.2
R_{IM}	(k)	29.4	19.2
R_{Total}	(k)	297.3	231.9

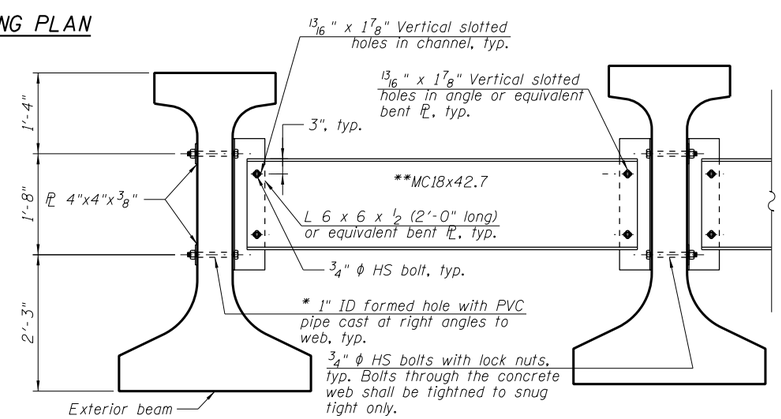

PERMANENT BRACING DETAIL

* Fabricator shall locate to miss strands within permissible tolerances.
** Alternate MC18x45.8 channel are permitted to facilitate material acquisition.

All material for bracing shall be hot dip galvanized according to AASHTO M111 unless otherwise noted.
Two hardened washers are required for each set of oversized holes.
All holes shal lbe 15/16" ϕ unless otherwise noted.
5/16" x 3"x x3" plate washers are required over all slotted holes.
All bolts shall be galvanized according to AASHTO M232.
Bracing shall be installed as beams are erected and tightened as soon as possible during erection.
Permanent bracing shall not be paid for separately, but shall be included in the cost of Furnishing and Erecting Precast Prestressed Concrete Beams, IL63N.

FILE NAME = W:\094-010 KDOT LMP Section B\CADD SHEETS\structural\Section B2\LMP over IL31 Bridge\xxx-SHT.22 Framing Plan.dgn

Bollinger, Lach & Associates, Inc.
ITASCA, ILLINOIS

USER NAME =	DESIGNED - JJI	REVISED
	CHECKED - NS	REVISED
PLOT SCALE =	DRAWN - GM	REVISED
PLOT DATE = 9/28/2017	CHECKED - NS	REVISED

STATE OF ILLINOIS
DEPARTMENT OF TRANSPORTATION

FRAMING PLAN
STRUCTURE NO. 045-3048
SHEET NO. 22 OF 49 SHEETS

F.A.U RTE.	SECTION	COUNTY	TOTAL SHEETS	SHEET NO.
2298	16-00215-11-PV	KANE	611	390
		CONTRACT NO. 61E05		
		ILLINOIS FED. AID PROJECT		

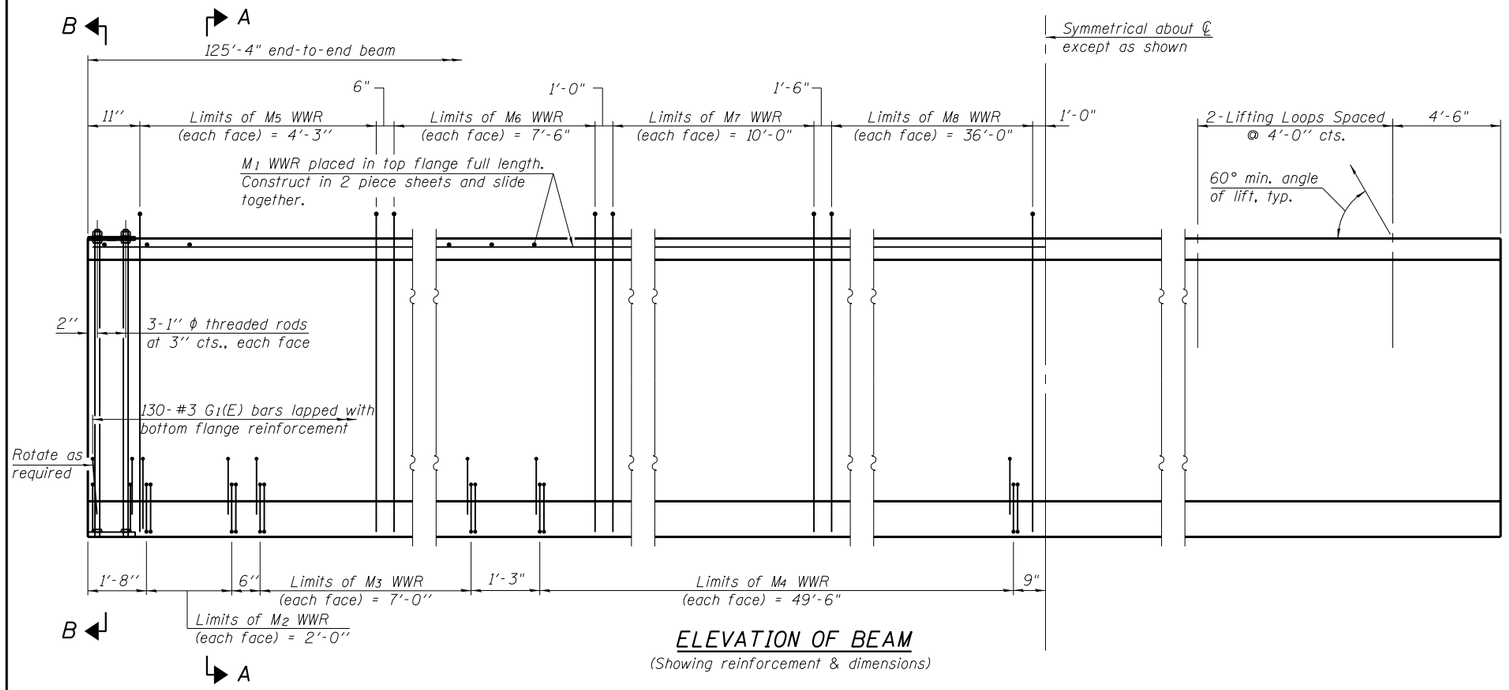

ELEVATION OF BEAM
(Showing reinforcement & dimensions)

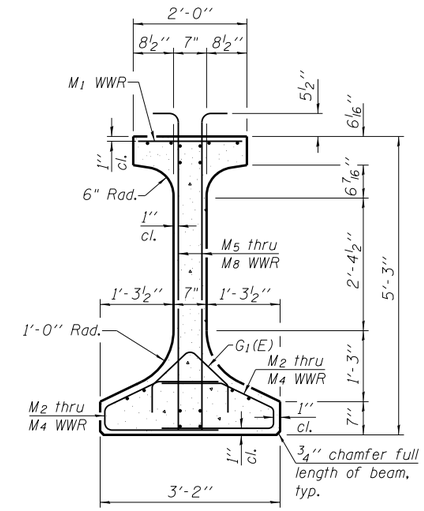

SECTION A-A

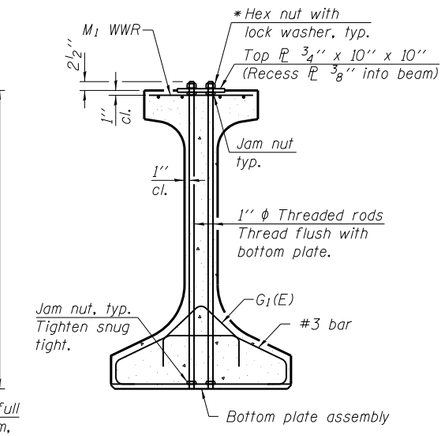

SECTION B-B
* Only tighten sufficiently to compress lock washers.

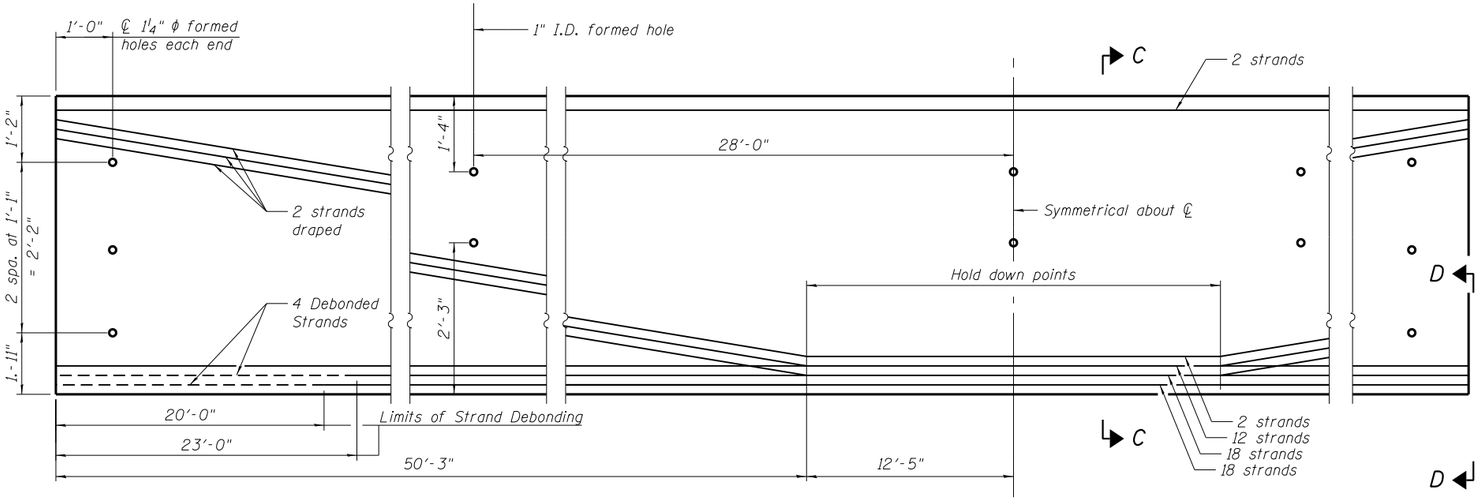

ELEVATION OF BEAM
(Showing prestressing steel)

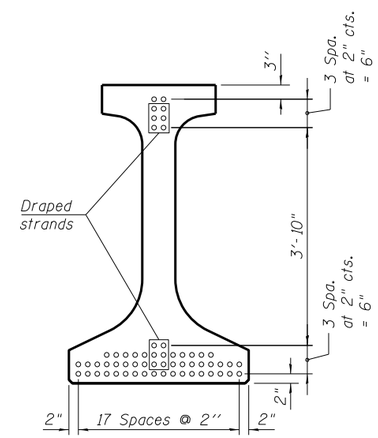

SECTION C-C
(50-0.6" ϕ 270 ksi strands)

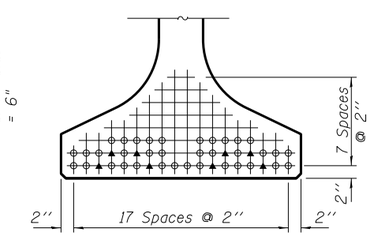

VIEW D-D
○ Fully bonded strand

▲ Partially debonded strand

Note:
See sheet 24 of 49 for additional details and Bill of Material.

IL63-2438 2-17-2017

Bollinger, Lach & Associates, Inc. ITASCA, ILLINOIS	USER NAME =	DESIGNED - JJI	REVISED	STATE OF ILLINOIS DEPARTMENT OF TRANSPORTATION	IL63N PPC BEAM STRUCTURE NO. 045-3048	F.A.U RTE.	SECTION	COUNTY	TOTAL SHEETS	SHEET NO.
		CHECKED - NS	REVISED			2298	16-00215-11-PV	KANE	611	391
	PLOT SCALE =	DRAWN - GM	REVISED			CONTRACT NO. 61E05				
	PLOT DATE = 9/28/2017	CHECKED - NS	REVISED		SHEET NO. 23 OF 49 SHEETS	ILLINOIS FED. AID PROJECT				

FILE NAME = W:\894-010 KDOT LMP Section B2\CADD SHEETS\structural\Section B2\LMP over IL31 Bridge\xxx-SHT_23 IL63-2438 PPC BEAM.dgn

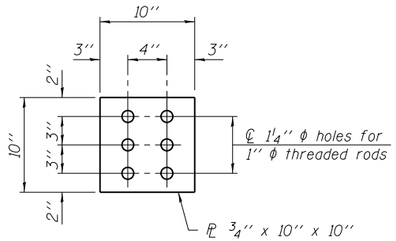

PLAN - TOP PLATE

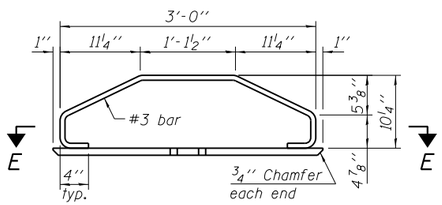

ELEVATION - BOTTOM PLATE ASSEMBLY

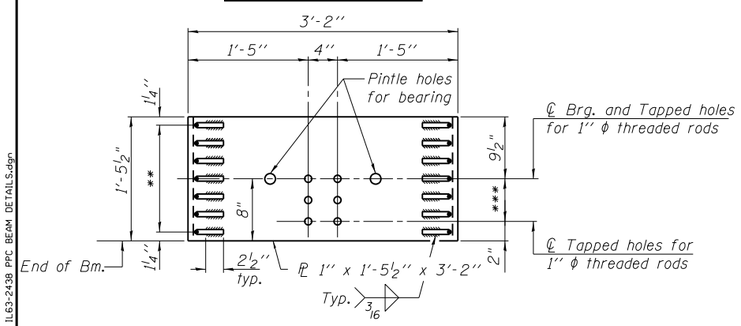

SECTION E-E

** 6 Spaces at 2½" = 1'-3"

*** 2 Spaces at 3" = 6"

Note:
See bearing details for pintle hole locations.

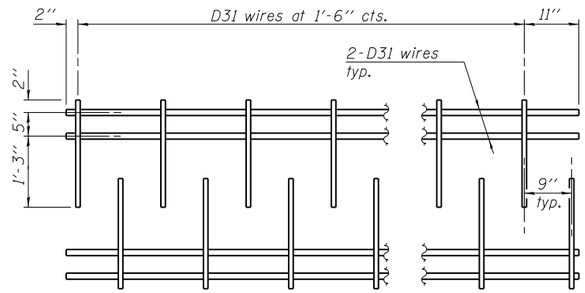

M1 WWR DETAIL

When multiple sheets of M1 WWR are required along the beam length, #5(E) bars (4'-6'' long) shall be used to splice the longitudinal D31 wires together.

NOTES

Inserts for ¾'' ϕ threaded dowel rods, when specified, are to be two strut, ferrule type for interior beams and single ferrule, flared loop type for exterior beams.

Prestressing steel shall be uncoated high strength, low relaxation 7-wire strand, Grade 270. The nominal diameter for beam strands shall be 0.6'' and the nominal cross-sectional area shall be 0.217 sq. in. The nominal diameter for lifting loops shall be ½'' and the nominal cross sectional area shall be 0.153 sq. in.

The beams shall have a final concrete compressive strength, f'c, of 8500 psi and a release concrete compressive strength, f'ci, of 7000 psi.

A minimum 2½'' ϕ lifting pin shall be used to engage the lifting loops during handling.

Bend the extended strands inward on the fascia beams to maintain 1½'' clearance inside the pier diaphragm.

The top and bottom plates shall be AASHTO M270 Grade 50.

The top plates and bottom plate assemblies shall be galvanized according to AASHTO M111. The threaded rods, nuts and washers shall be galvanized according to AASHTO M232.

Threaded rods shall be ASTM F 1554 Grade 55.

Beams shall not be released from the fabricator until they have attained 45 days of age or older.

Welded Wire Reinforcement (WWR) shall conform to ASTM A884 with a Class A, Type 1 epoxy coating.

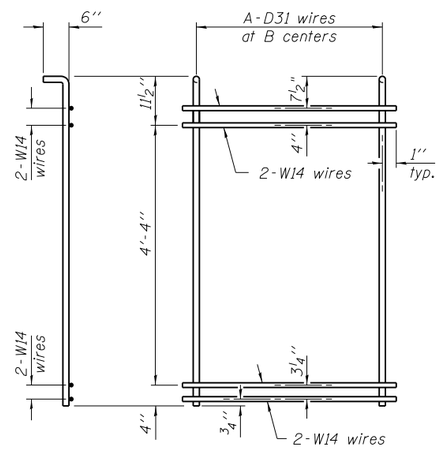

M5 THRU M8 WWR DETAIL

(See Table of Dimensions)

TABLE OF DIMENSIONS

SPAN 1

WWR	A	B
M2	9	3''
M3	15	6''
M4	34	1'-6''
M5	18	3''
M6	16	6"
M7	11	1'-0''
M8	19	2'-0''

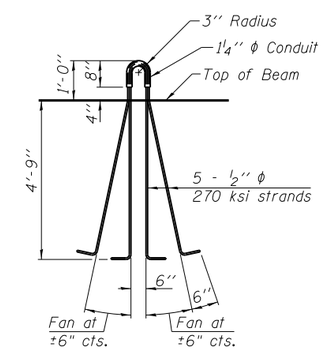

LIFTING LOOP DETAIL

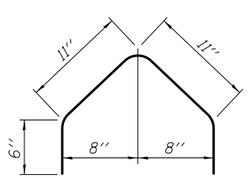

BAR G1(E)

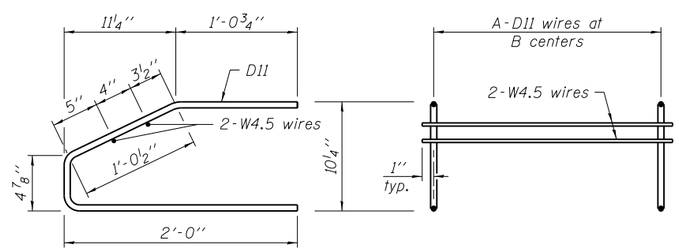

M2 THRU M4 WWR DETAIL

(See Table of Dimensions)

BILL OF MATERIAL

Item	Unit	Total
Furnishing and Erecting Precast Prestressed Concrete Beams, IL63N	Ft.	1,254

IL63-2438D 2-17-2017

FILE NAME = W:\894-010 KDOT LMP Section B\CADD SHEETS\structural\Section B2\LMP over IL31 Bridge\xxx-SHT.24 IL63-2438 PPC BEAM DETAILS.dgn

Bollinger, Lach & Associates, Inc.
ITASCA, ILLINOIS

USER NAME =	DESIGNED - JJI	REVISED
	CHECKED - NS	REVISED
PLOT SCALE =	DRAWN - GM	REVISED
PLOT DATE = 9/28/2017	CHECKED - NS	REVISED

STATE OF ILLINOIS
DEPARTMENT OF TRANSPORTATION

IL63N PPC BEAM DETAILS
STRUCTURE NO. 045-3048

SHEET NO. 24 OF 49 SHEETS

F.A.U RTE.	SECTION	COUNTY	TOTAL SHEETS	SHEET NO.
2298	16-00215-11-PV	KANE	611	392

CONTRACT NO. 61E05

ILLINOIS FED. AID PROJECT

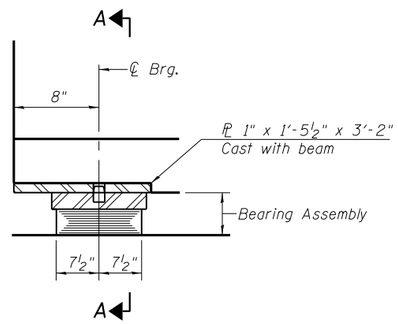

SECTION AT ABUT.

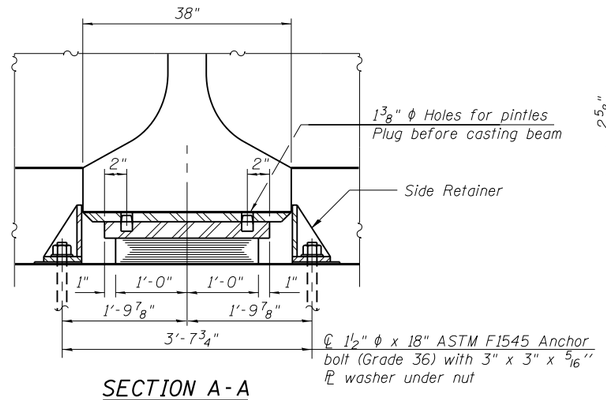

SECTION A-A

TYPE I ELASTOMERIC EXP. BRG.

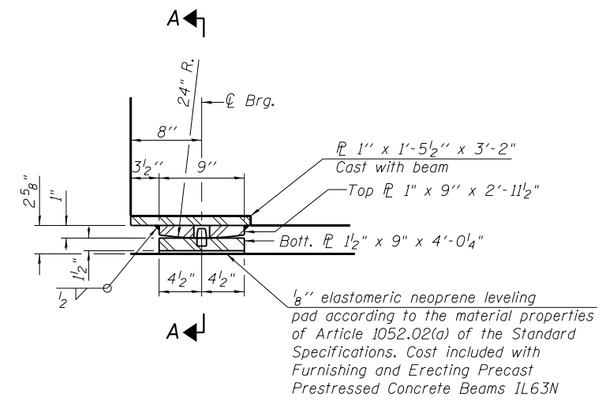

SECTION AT ABUT.

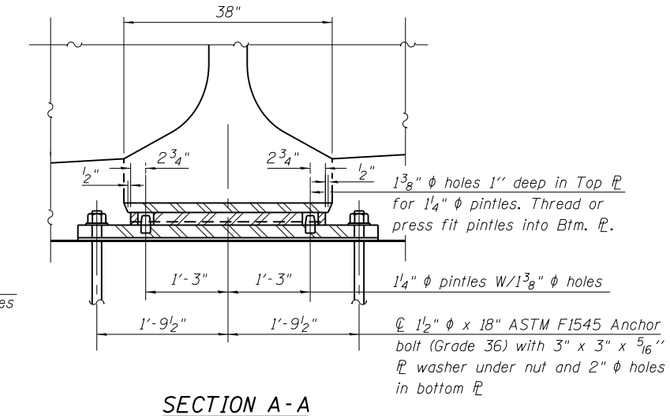

SECTION A-A

FIXED BEARING

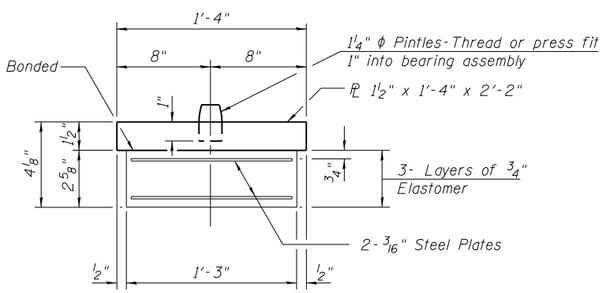

BEARING ASSEMBLY

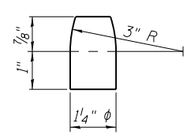

PINTLE

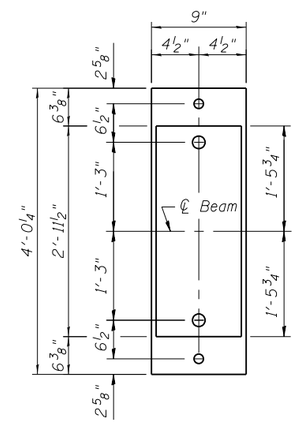

PLAN OF
TOP & BOTTOM PLATES

PINTLE

Notes:

Anchor bolts shall be ASTM F1554 all-thread (or an Engineer-approved alternate material) of the grade(s) and diameter(s) specified. The corresponding specified grade of AASHTO M314 anchor bolts may be used in lieu of ASTM F1554.

Anchor bolts at fixed bearings may be either cast in place or installed in holes drilled after the supported member is in place and prior to pouring the deck.

Drilled and set anchor bolts shall be installed according to Article 521.06 of the Standard Specifications.

Side retainers and other steel members required for the bearing assembly shall be included in the cost of Elastomeric Bearing Assembly, Type I.

See sheet 24 of 49 for additional details of plate cast with beam.

Beams shall be braced for stability during erection and remain braced until deck is poured and cured.

Anchor bolts and side retainers at all supports shall be installed as each member is erected unless and equivalent temporary means of lateral restraint is used.

All (embedded and separate) bearing plates, side retainers, anchor bolts, nuts, washers and pintles shall be galvanized according to AASHTO M111 or M232 as applicable.

The structural steel plates and pintles of the Bearing Assembly and Fixed Bearing shall conform to the requirements of AASHTO M 270 Grade 50.

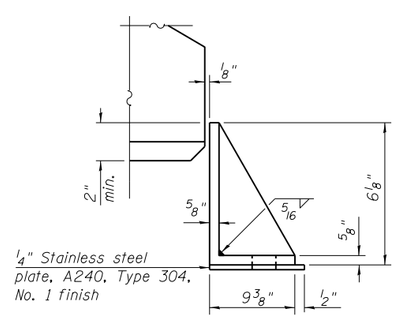

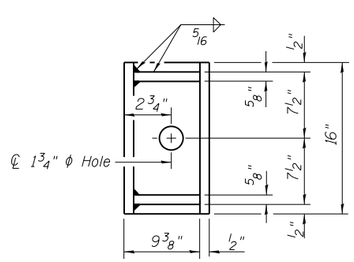

SIDE RETAINER

Equivalent rolled angle with stiffeners will be allowed in lieu of welded plates.

BILL OF MATERIAL

Item	Unit	Total
Elastomeric Bearing Assembly, Type I	Each	10
Steel Bearing Assembly	Each	10
Anchor Bolts, 1½"	Each	40

FILE NAME = W:\894-010 KDOT LMP Section B\CADD SHEETS\structural\Section B2\LMP over IL31 Bridge\xxx-SHT_25 BEARING DETAILS.dgn

Bollinger, Lach & Associates, Inc.
ITASCA, ILLINOIS

USER NAME =	DESIGNED - JJI	REVISED
	CHECKED - NS	REVISED
PLOT SCALE =	DRAWN - GM	REVISED
PLOT DATE = 9/28/2017	CHECKED - NS	REVISED

STATE OF ILLINOIS
DEPARTMENT OF TRANSPORTATION

BEARING DETAILS
STRUCTURE NO. 045-3048
SHEET NO. 25 OF 49 SHEETS

F.A.U RTE.	SECTION	COUNTY	TOTAL SHEETS	SHEET NO.
2298	16-00215-11-PV	KANE	611	393

CONTRACT NO. 61E05

ILLINOIS FED. AID PROJECT

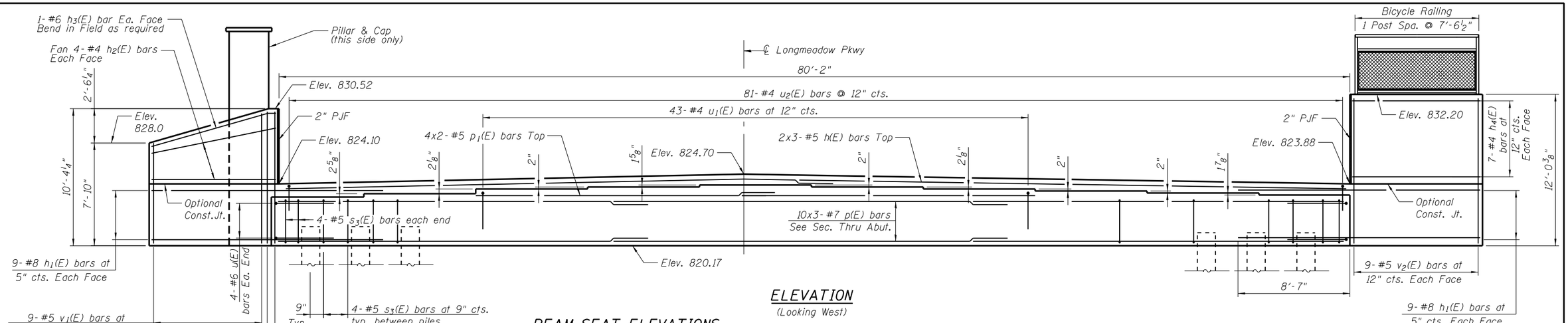

ELEVATION

(Looking West)

BEAM SEAT ELEVATIONS

Beam	Elev.
1	823.67
2	823.83
3	823.99
4	824.17
5	824.35

Beam	Elev.
6	824.52
7	824.38
8	824.21
9	824.03
10	823.81

Notes:
Pour steps monolithically with cap.
Space reinforcement in cap to miss anchor bolts.

MIN. BAR LAP

#5 = 3'-2"
#7 = 4'-5"

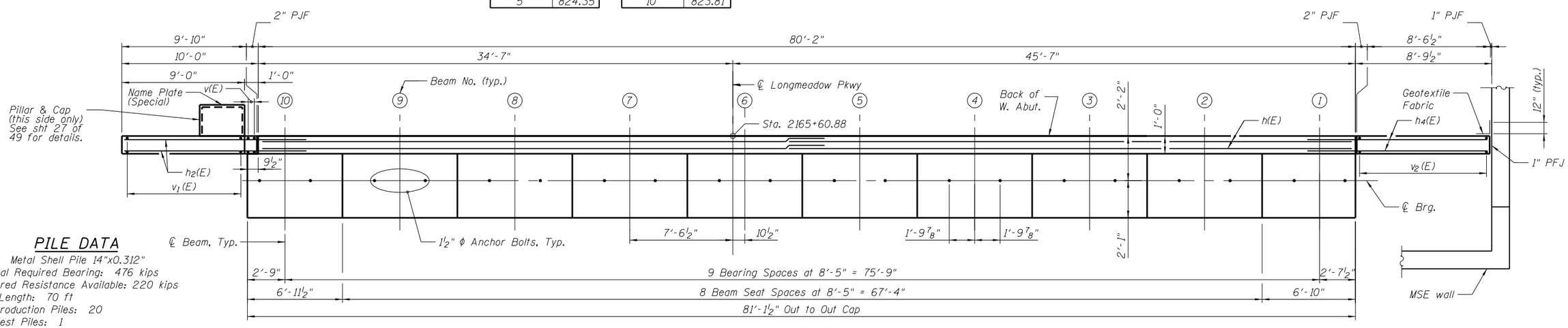

PILE DATA

Type: Metal Shell Pile 14"x0.312"
Nominal Required Bearing: 476 kips
Factored Resistance Available: 220 kips
Est. Length: 70 ft
No. Production Piles: 20
No. Test Piles: 1

TOP VIEW

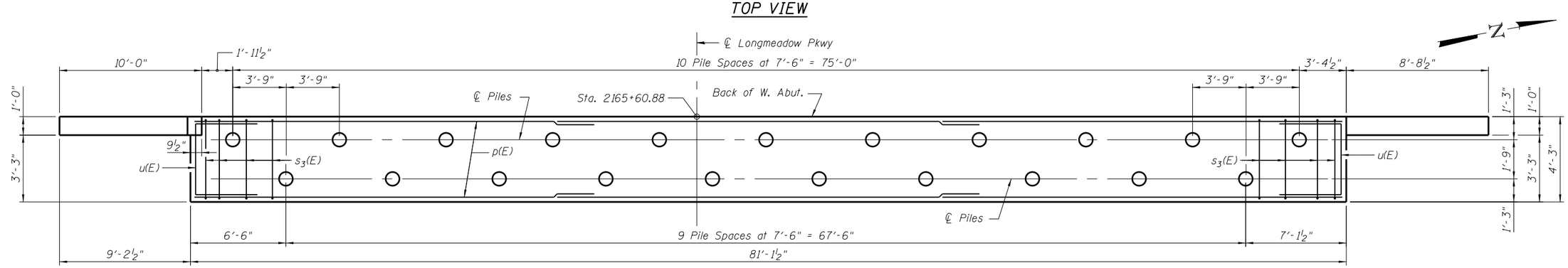

PLAN-PILE CAP

Bollinger, Lach & Associates, Inc. ITASCA, ILLINOIS	USER NAME =	DESIGNED - JJI	REVISED
		CHECKED - NS	REVISED
	PLOT SCALE =	DRAWN - GM	REVISED
	PLOT DATE = 9/28/2017	CHECKED - NS	REVISED

STATE OF ILLINOIS
DEPARTMENT OF TRANSPORTATION

WEST ABUTMENT PLAN AND ELEVATION
STRUCTURE NO. 045-3048

SHEET NO. 26 OF 49 SHEETS

F.A.U RTE.	SECTION	COUNTY	TOTAL SHEETS	SHEET NO.
2298	16-00215-11-PV	KANE	611	394
		CONTRACT NO. 61E05		
		ILLINOIS FED. AID PROJECT		

FILE NAME = W:\094-010 KDOT LMP Section B\CADD SHEETS\structural\Section B2\LMP over IL31 Bridge\xxx-SHT.26 WestAbutPlanElev.dgn

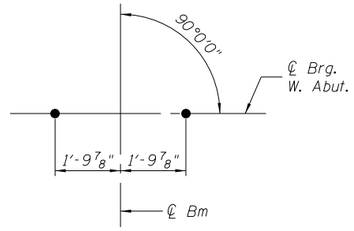

ANCHOR BOLT DETAILS

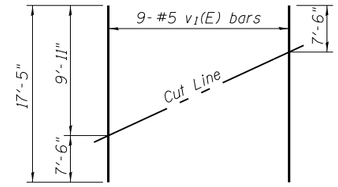

FIELD CUTTING DIAGRAM

Order $v_1(E)$ bars full length. Cut as shown and use remainder of bars in opposite face.

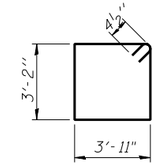

BARS $s_3(E)$

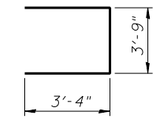

BAR $u(E)$

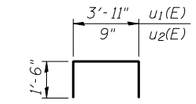

BAR $u_1(E)$ & $u_2(E)$

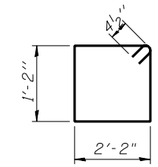

BARS $s_4(E)$

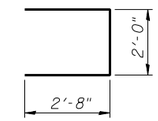

BAR $u_5(E)$

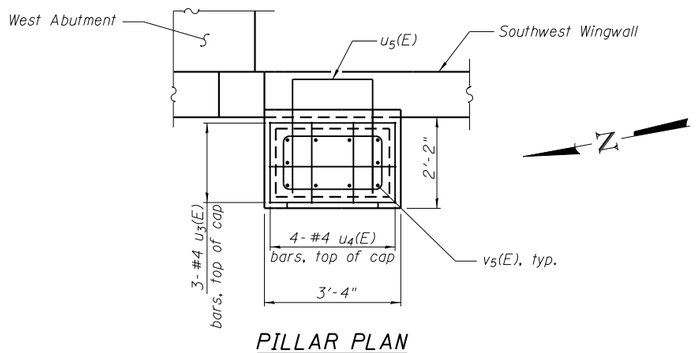

PILLAR PLAN

(Wingwall bars and superstructure omitted for clarity)

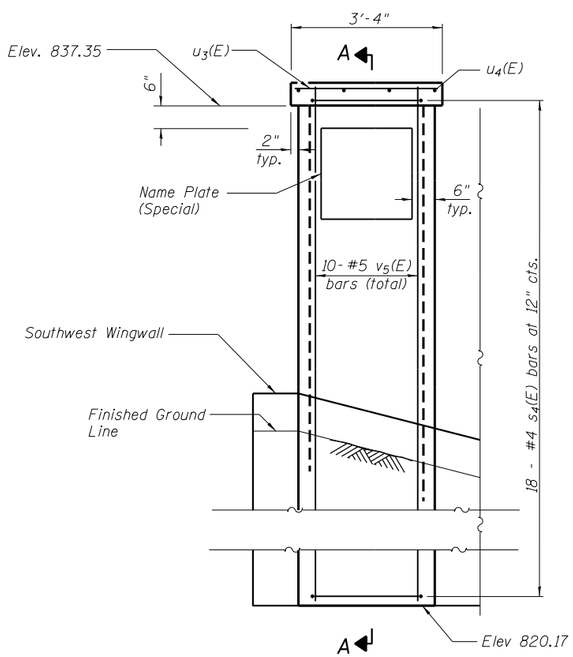

PILLAR ELEVATION

(Looking East)

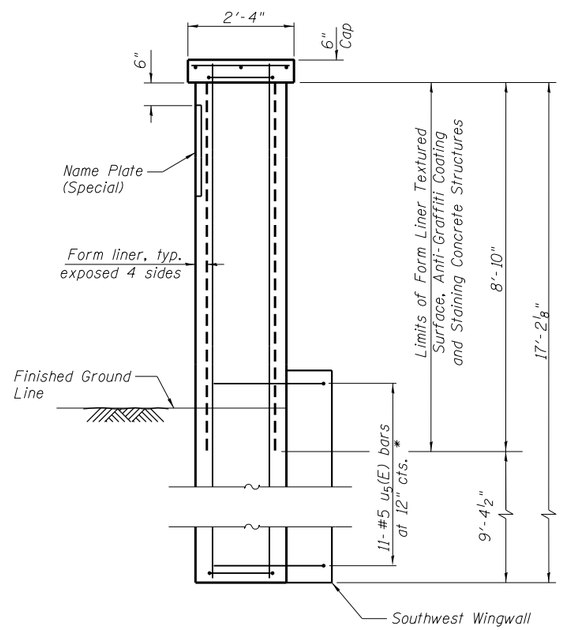

SECTION A-A

* Tilt bars to fit wingwall slope

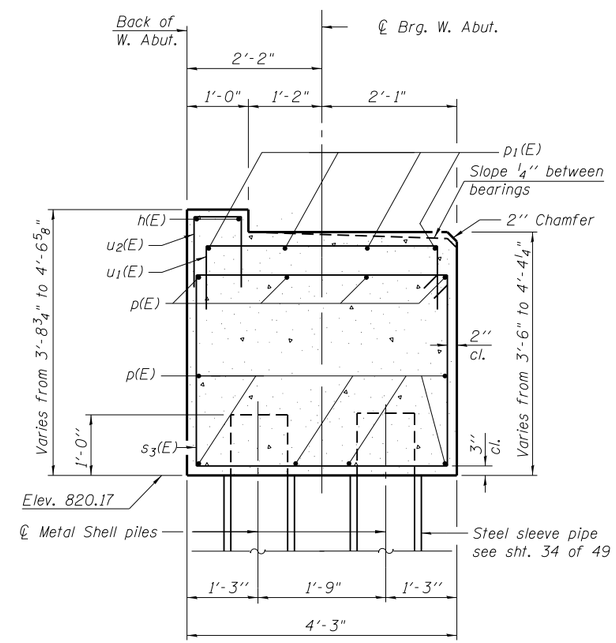

SEC. THRU ABUT.

WEST ABUTMENT BILL OF MATERIAL

Bar	No.	Size	Length	Shape
h(E)	6	#5	28'-9"	
$h_1(E)$	36	#8	18'-5"	
$h_2(E)$	22	#4	9'-8"	
$h_3(E)$	2	#6	10'-2"	
$h_4(E)$	14	#4	8'-6"	
p(E)	30	#7	29'-9"	
$p_1(E)$	8	#5	23'-4"	
$s_3(E)$	88	#5	14'-11"	
$s_4(E)$	18	#4	7'-5"	
u(E)	8	#6	10'-5"	
$u_1(E)$	43	#4	6'-11"	
$u_2(E)$	81	#4	3'-9"	
$u_3(E)$	3	#4	3'-0"	
$u_4(E)$	4	#4	2'-0"	
$u_5(E)$	11	#4	7'-4"	
v(E)	4	#5	10'-1"	
$v_1(E)$	9	#5	17'-4"	
$v_2(E)$	18	#5	11'-10"	
$v_5(E)$	10	#5	16'-10"	
Structure Excavation		Cu. Yd.	2	
Concrete Structures		Cu. Yd.	62.3	
Form Liner Textured Surface		Sq. Ft.	89	
Reinforcement Bars, Epoxy Coated		Pound	6,780	
Furnishing Metal Shell Piles 14" x 0.312"		Foot	1,400	
Driving Piles		Foot	1,400	
Test Pile, Metal Shell		Each	1	
Geocomposite Wall Drain		Sq. Yd.	67	
Staining Concrete Structures		Sq. Ft.	89	
Name Plates (Special)		Each	1	
Anti-Graffiti Coating		Sq. Ft.	89	

For details of piles see sheet 30 of 49.

FILE NAME = W:\894-010 KDOT LMP Section B\CADD SHEETS\structural\Section B2\LMP over IL31 Bridge\xxx-SHT.27 WestAbutDet.dgn

Bollinger, Lach & Associates, Inc.
ITASCA, ILLINOIS

USER NAME =	DESIGNED - JJI	REVISED
	CHECKED - NS	REVISED
PLOT SCALE =	DRAWN - GM	REVISED
PLOT DATE = 9/28/2017	CHECKED - NS	REVISED

STATE OF ILLINOIS
DEPARTMENT OF TRANSPORTATION

WEST ABUTMENT DETAILS
STRUCTURE NO. 045-3048

SHEET NO. 27 OF 49 SHEETS

F.A.U RTE.	SECTION	COUNTY	TOTAL SHEETS	SHEET NO.
2298	16-00215-11-PV	KANE	611	395

CONTRACT NO. 61E05

ILLINOIS FED. AID PROJECT

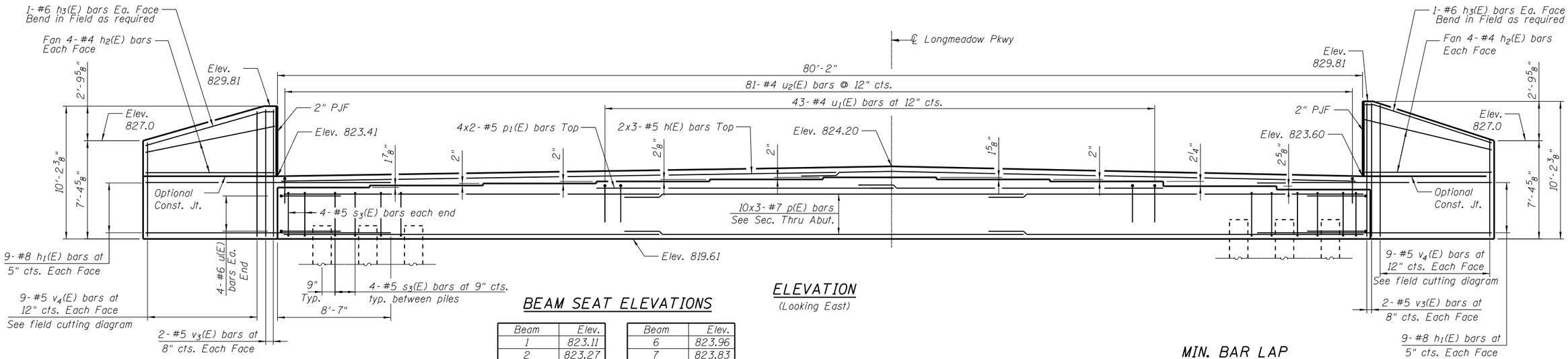

ELEVATION

(Looking East)

BEAM SEAT ELEVATIONS

Beam	Elev.
1	823.11
2	823.27
3	823.44
4	823.61
5	823.79

Beam	Elev.
6	823.96
7	823.83
8	823.65
9	823.47
10	823.25

MIN. BAR LAP

#5 = 3'-2"
#7 = 4'-5"

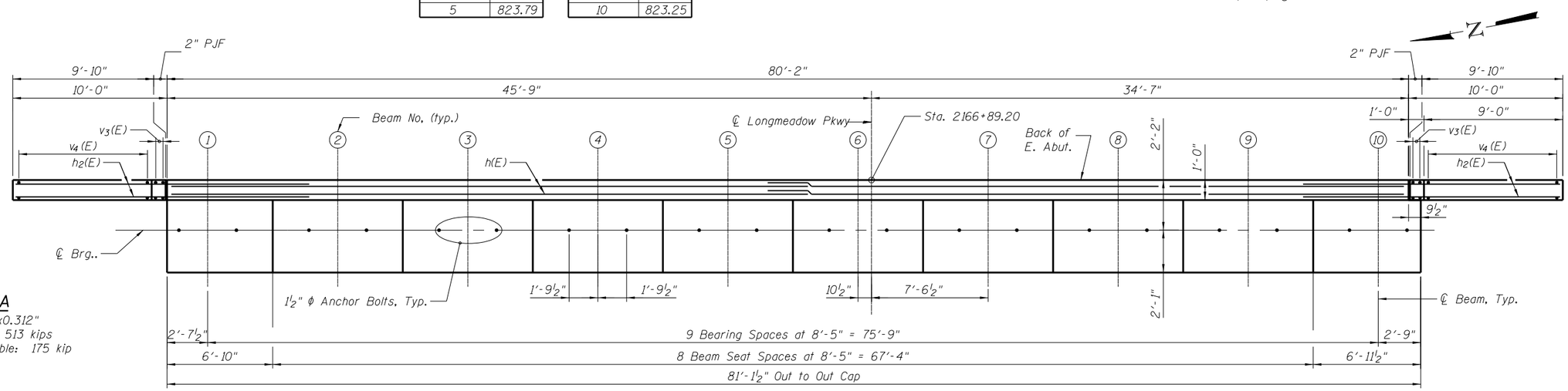

TOP VIEW

PILE DATA

Type: Metal Shell Pile 14"x0.312"
Nominal Required Bearing: 513 kips
Factored Resistance Available: 175 kip
Est. Length: 80 ft
No. Production Piles: 22
No. Test Piles: 1

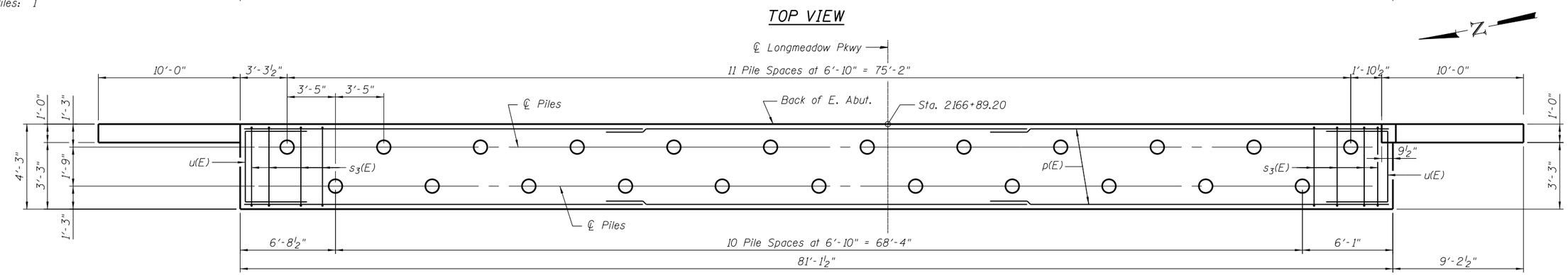

PLAN-PILE CAP

FILE NAME = W:\894-010 KDOT LMP Section B\CADD SHEETS\structural\Section B2\LMP over IL31 Bridge\xxx-SHT-28 EastAbutPlanElev.dgn

Bollinger, Lach & Associates, Inc.
ITASCA, ILLINOIS

USER NAME =	DESIGNED - JJI	REVISED	
	CHECKED - NS	REVISED	
PLOT SCALE =	DRAWN - GM	REVISED	
PLOT DATE = 9/28/2017	CHECKED - NS	REVISED	

STATE OF ILLINOIS
DEPARTMENT OF TRANSPORTATION

EAST ABUTMENT PLAN AND ELEVATION
STRUCTURE NO. 045-3048

SHEET NO. 28 OF 49 SHEETS

F.A.U RTE.	SECTION	COUNTY	TOTAL SHEETS	SHEET NO.
2298	16-00215-11-PV	KANE	611	396
		CONTRACT NO. 61E05		
		ILLINOIS FED. AID PROJECT		

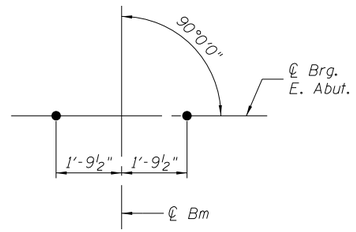

ANCHOR BOLT DETAILS

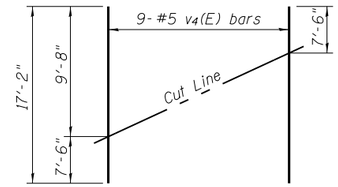

FIELD CUTTING DIAGRAM

Order v4(E) bars full length. Cut as shown and use remainder of bars in opposite face.

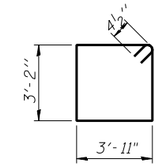

BARS s3(E)

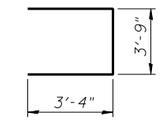

BAR u(E)

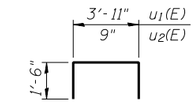

BAR u1(E) & u2(E)

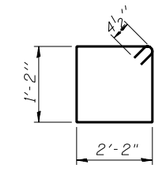

BARS s4(E)

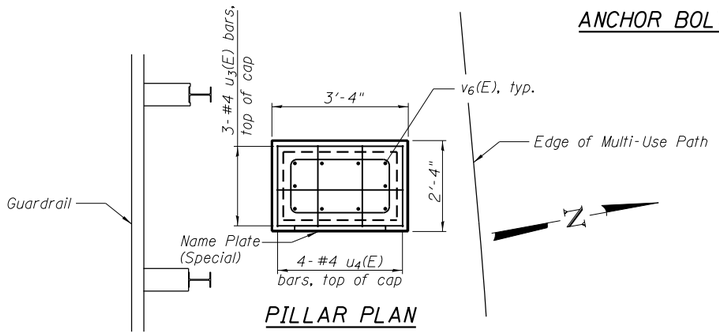

PILLAR PLAN

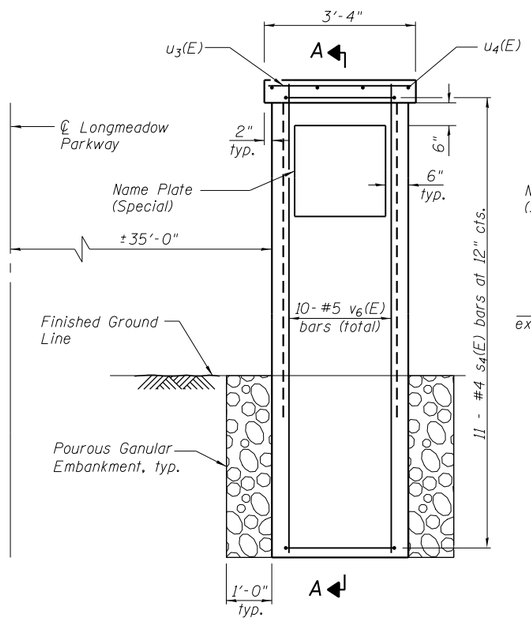

PILLAR ELEVATION

(Looking West)

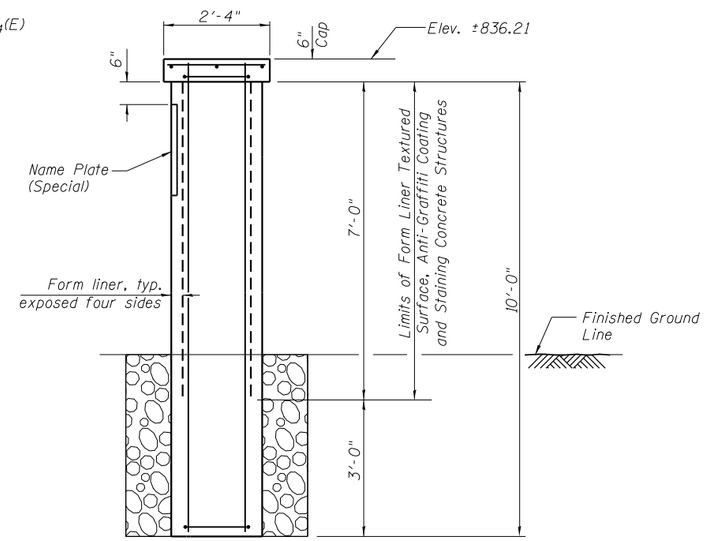

SECTION A-A

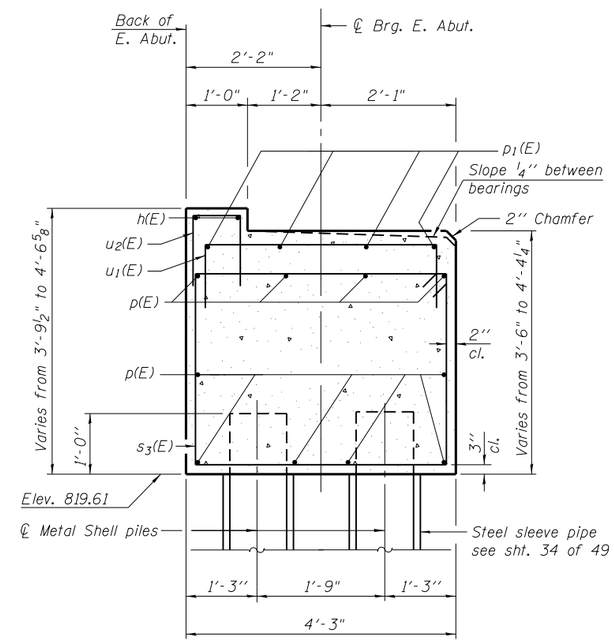

SEC. THRU ABUT.

EAST ABUTMENT BILL OF MATERIAL

Bar	No.	Size	Length	Shape
h(E)	6	#5	28'-2"	
h1(E)	24	#9	18'-5"	
h2(E)	16	#4	9'-8"	
h3(E)	4	#6	10'-2"	
p(E)	30	#7	29'-9"	
p1(E)	8	#5	23'-4"	
s3(E)	96	#5	14'-11"	
s4(E)	11	#4	7'-5"	
u(E)	8	#6	10'-5"	
u1(E)	43	#4	6'-11"	
u2(E)	81	#4	3'-9"	
u3(E)	3	#4	3'-0"	
u4(E)	4	#4	2'-0"	
v3(E)	8	#5	9'-10"	
v4(E)	18	#5	17'-2"	
v6(E)	10	#5	10'-1"	
Porous Granular Embankment		Cu. Yd.	2	
Structure Excavation		Cu. Yd.	3	
Concrete Structures		Cu. Yd.	59.9	
Form Liner Textured Surface		Sq. Ft.	70	
Reinforcement Bars, Epoxy Coated		Pound	6,730	
Furnishing Metal Shell Piles 14" x 0.312"		Foot	1,760	
Driving Piles		Foot	1,760	
Test Pile Metal Shell		Each	1	
Geocomposite Wall Drain		Sq. Yd.	67	
Staining Concrete Structures		Sq. Ft.	70	
Name Plates (Special)		Each	1	
Anti-Graffiti Coating		Sq. Ft.	70	

For details of piles see sheet 30 of 49.

FILE NAME = W:\894-010 KDOT LMP Section B\CADD SHEETS\structural\Section B2\LMP over IL31 Bridge\xxx-SHT.29 EastAbutDetail.dgn

Bollinger, Lach & Associates, Inc.
ITASCA, ILLINOIS

USER NAME =	DESIGNED - JJI	REVISED
	CHECKED - NS	REVISED
PLOT SCALE =	DRAWN - GM	REVISED
PLOT DATE = 9/28/2017	CHECKED - NS	REVISED

STATE OF ILLINOIS
DEPARTMENT OF TRANSPORTATION

EAST ABUTMENT DETAILS
STRUCTURE NO. 045-3048

SHEET NO. 29 OF 49 SHEETS

F.A.U RTE.	SECTION	COUNTY	TOTAL SHEETS	SHEET NO.
2298	16-00215-11-PV	KANE	611	397

CONTRACT NO. 61E05

ILLINOIS FED. AID PROJECT

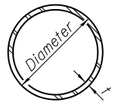

METAL SHELL PILE TABLE

Designation and outside diameter	Wall thickness t	Weight per foot (Lbs./ft.)	Inside volume (yd.^{3}/ft.)
PP12	0.179''	22.60	0.0274
PP12	0.250''	31.37	0.0267
PP14	0.250''	36.71	0.0368
PP14	0.312''	45.61	0.0361

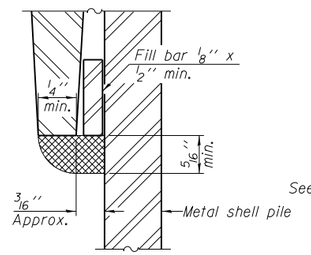

DETAIL A

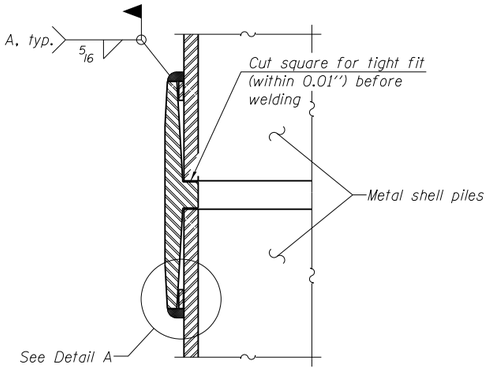

Notes:
The 1/8'' x 1/2'' min. fill bar may be constructed of 2 bars with a 1/8'' max. gap between them.
Pile segments shall be driven to solid contact with splicer before welding.

WELDED COMMERCIAL SPLICE

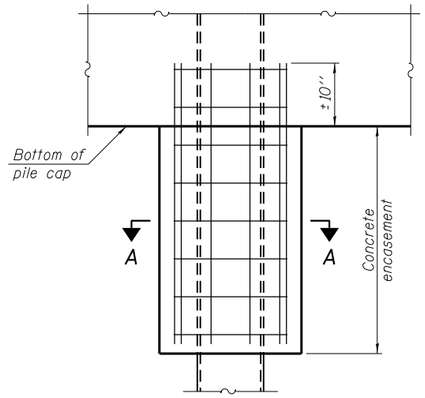

ELEVATION

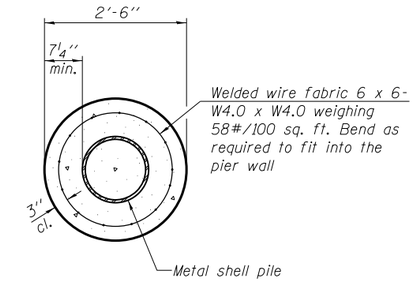

SECTION A-A

Note:
Forms for encasement may be omitted when soil conditions permit.

CONCRETE ENCASEMENT AT PIERS

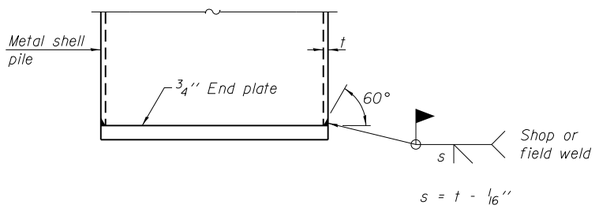

END PLATE ATTACHMENT

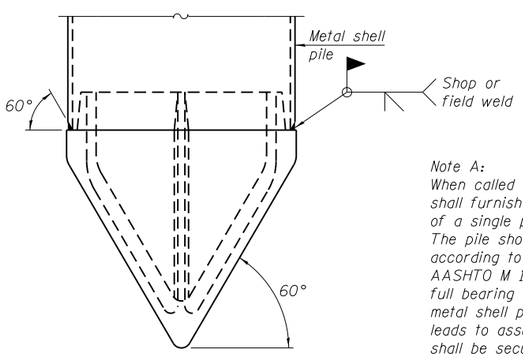

Note A:
When called for on the plans, the Contractor shall furnish metal shell pile shoes consisting of a single piece conical pile point as shown. The pile shoes shall be cast in one piece steel according to either ASTM A 148 Grade 90-60 or AASHTO M 103 Grade 65-35 and shall provide full bearing over the full circumference of the metal shell pile. The pile shoe shall have tapered leads to assure proper alignment and fitting and shall be secured to the pile with a circumferential weld.

METAL SHELL PILE SHOE ATTACHMENT

(See Note A)

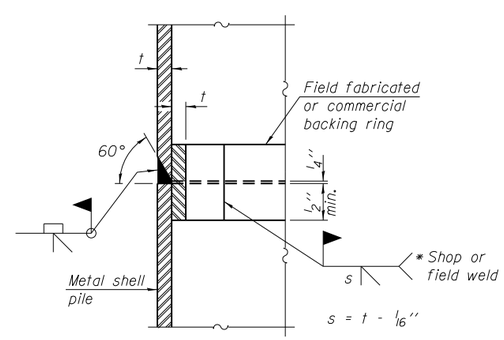

COMPLETE PENETRATION WELD SPLICE

* Field fabricated backing ring may be made from pile shell by removing segment to allow reducing circumference and vertically rejoin with partial joint penetration weld.

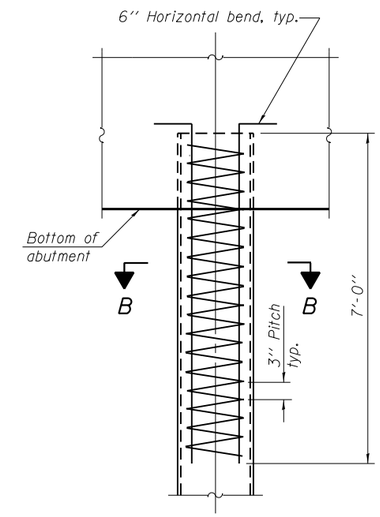

ELEVATION

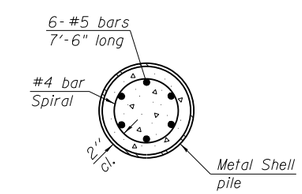

SECTION B-B

METAL SHELL REINFORCEMENT AT ABUTMENTS

Note:
The metal shell piles shall be according to ASTM A 252 Grade 3.

F-MS 1-27-12

FILE NAME = W:\894-010 KDOT LMP Section B\CADD SHEETS\structural\Section B2\LMP over IL31 Bridge\xxx-SHT-30 METAL SHELL PILE DETAILS.dgn

Bollinger, Lach & Associates, Inc.
ITASCA, ILLINOIS

USER NAME =	DESIGNED - JJI	REVISED
	CHECKED - NS	REVISED
PLOT SCALE =	DRAWN - GM	REVISED
PLOT DATE = 9/28/2017	CHECKED - NS	REVISED

STATE OF ILLINOIS
DEPARTMENT OF TRANSPORTATION

METAL SHELL PILE DETAILS
STRUCTURE NO. 045-3048
SHEET NO. 30 OF 49 SHEETS

F.A.U RTE.	SECTION	COUNTY	TOTAL SHEETS	SHEET NO.
2298	16-00215-11-PV	KANE	611	398
		CONTRACT NO. 61E05		
		ILLINOIS FED. AID PROJECT		

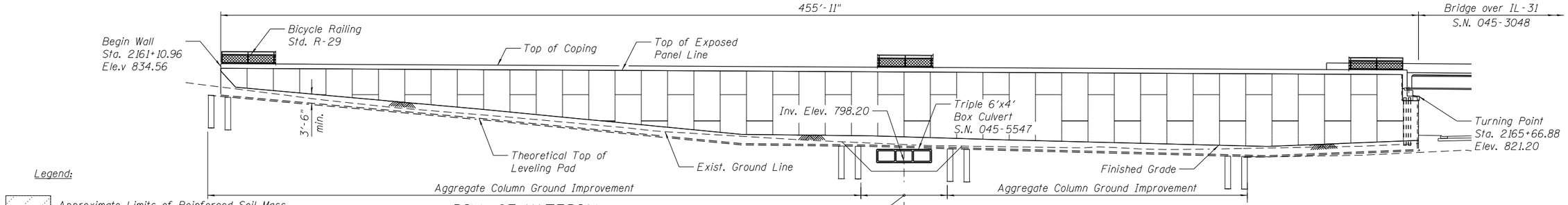

ELEVATION
(Back Face)

Legend:

- Approximate Limits of Reinforced Soil Mass and Aggregate Column Ground Improvement.
- Approximate Limits of Reinforced Soil Mass and Removal & Replacement of Unsuitable Soil.
- Approximate Limits of Removal & Replacement of Unsuitable Soil.
- Approximate Limits of Reinforced Soil Mass

BILL OF MATERIAL

Structure Excavation	Cu. Yd.	758
Concrete Superstructure	Cu. Yd.	128.9
Form Liner Textured Surface	Sq. Ft.	10,014
Protective Coat	Sq. Yd.	150
Reinforcement Bars, Epoxy Coated	Pound	15,820
Mechanically Stabilized Earth Retaining Wall	Sq. Ft.	14,411
Aggregate Column Ground Improvement	L. Sum	1
Staining Concrete Structures	Sq. Ft.	10,014
Anti-Graffiti Coating	Sq. Ft.	10,397

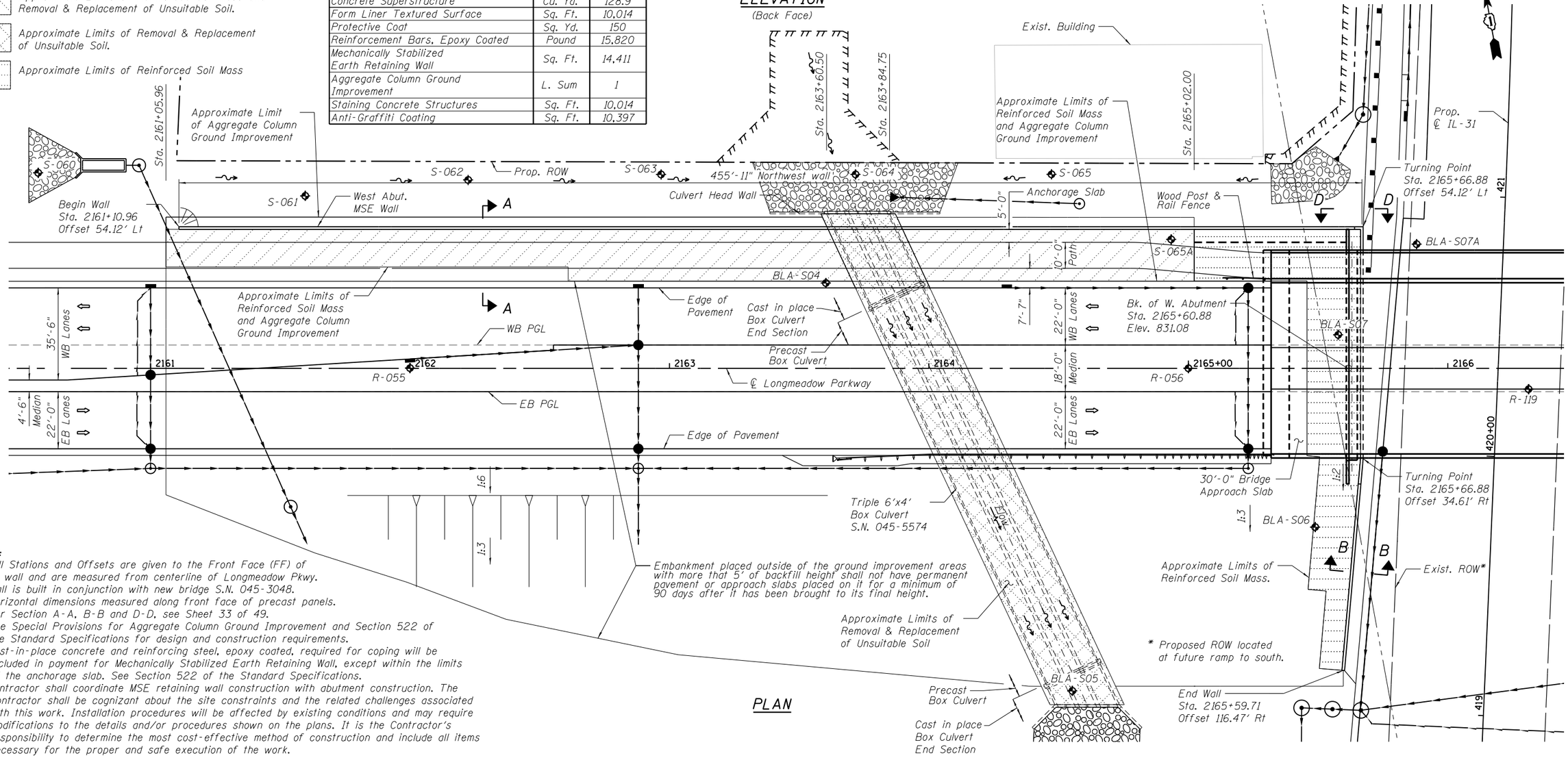

PLAN

Notes:

1. Wall Stations and Offsets are given to the Front Face (FF) of the wall and are measured from centerline of Longmeadow Pkwy.
2. Wall is built in conjunction with new bridge S.N. 045-3048.
3. Horizontal dimensions measured along front face of precast panels.
4. For Section A-A, B-B and D-D, see Sheet 33 of 49.
5. See Special Provisions for Aggregate Column Ground Improvement and Section 522 of the Standard Specifications for design and construction requirements.
6. Cast-in-place concrete and reinforcing steel, epoxy coated, required for coping will be included in payment for Mechanically Stabilized Earth Retaining Wall, except within the limits of the anchorage slab. See Section 522 of the Standard Specifications.
7. Contractor shall coordinate MSE retaining wall construction with abutment construction. The Contractor shall be cognizant about the site constraints and the related challenges associated with this work. Installation procedures will be affected by existing conditions and may require modifications to the details and/or procedures shown on the plans. It is the Contractor's responsibility to determine the most cost-effective method of construction and include all items necessary for the proper and safe execution of the work.

Embankment placed outside of the ground improvement areas with more that 5' of backfill height shall not have permanent pavement or approach slabs placed on it for a minimum of 90 days after it has been brought to its final height.

FILE NAME = W:\894-010 KDOT LMP Section B\CADD SHEETS\structural\Section B2\LMP over IL31 Bridge\xxx-SHT-31 W Abut MSE Wall Plan.dgn

Bollinger, Lach & Associates, Inc.
ITASCA, ILLINOIS

USER NAME =	DESIGNED - JJI	REVISED
	CHECKED - NS	REVISED
PLOT SCALE =	DRAWN - GM	REVISED
PLOT DATE = 9/28/2017	CHECKED - NS	REVISED

STATE OF ILLINOIS
DEPARTMENT OF TRANSPORTATION

WEST ABUTMENT MSE WALL PLAN
STRUCTURE NO. 045-3048

SHEET NO. 31 OF 49 SHEETS

F.A.U RTE.	SECTION	COUNTY	TOTAL SHEETS	SHEET NO.
2298	16-00215-11-PV	KANE	611	399

CONTRACT NO. 61E05

ILLINOIS FED. AID PROJECT

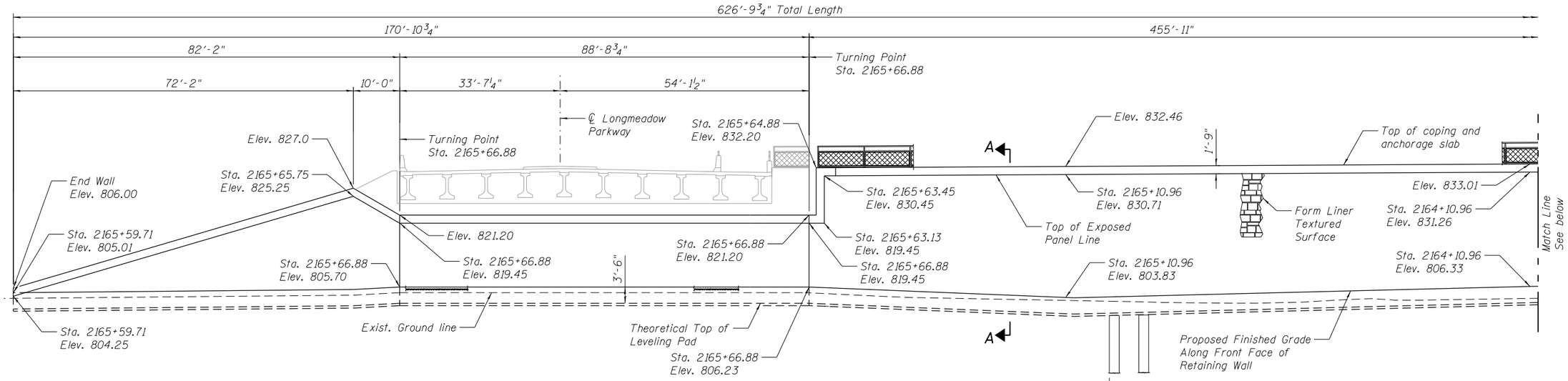

WEST ABUTMENT MSE WALL
UNFOLDED ELEVATION VIEW
(Looking West & South)

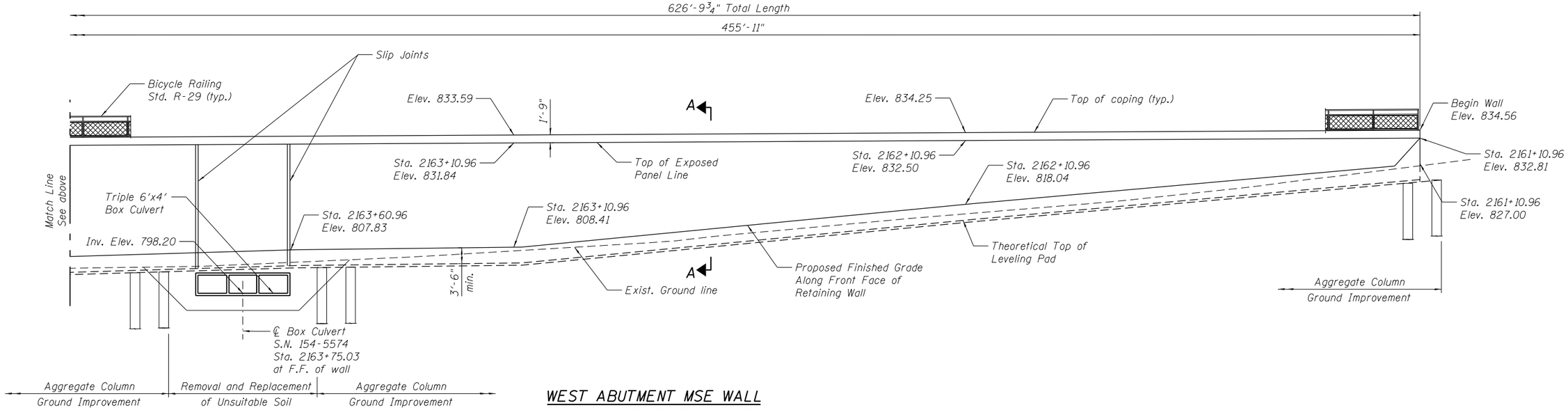

WEST ABUTMENT MSE WALL
UNFOLDED ELEVATION VIEW
(Looking South)

Notes:
1. Wall Stations and Offsets are given to the Front Face (FF) of the wall and are measured from centerline of Longmeadow Pkwy.
2. Wall is built in conjunction with new bridge S.N. 045-3048.
3. Horizontal dimensions measured along front face of precast panels.
4. For Section A-A see Sheet 33 of 49.

FILE NAME = W:\894-010 KDOT LMP Section B\CADD SHEETS\structural\Section B2\LMP over IL31 Bridge\xxx-SHT_32 W Abut MSE Wall Elev.dgn

Bollinger, Lach & Associates, Inc. ITASCA, ILLINOIS	USER NAME =	DESIGNED - JJI	REVISED
		CHECKED - NS	REVISED
	PLOT SCALE =	DRAWN - GM	REVISED
	PLOT DATE = 9/28/2017	CHECKED - NS	REVISED

STATE OF ILLINOIS
DEPARTMENT OF TRANSPORTATION

WEST ABUTMENT MSE WALL ELEVATION
STRUCTURE NO. 045-3048

SHEET NO. 32 OF 49 SHEETS

F.A.U RTE.	SECTION	COUNTY	TOTAL SHEETS	SHEET NO.
2298	16-00215-11-PV	KANE	611	400
		CONTRACT NO. 61E05		
		ILLINOIS FED. AID PROJECT		