NOTES

Hollow structural steel tubing shall conform to the requirements of ASTM designation A500 Grade B Structural Steel Tubing and shall meet the longitudinal CVN requirements of 15 ft.-lbs. at 0° F.

All other steel shapes and plates shall conform to the requirements of AASHTO M 270 Grade 36 except posts and angles shall conform to AASHTO M 270 Grade 50.

Bolts, cap screws, and nuts shall conform to the requirement of ASTM designation A307 except for high strength bolts, nuts and washers noted which shall conform to AASHTO M 164.

All bolts, nuts, cap screws, washers and lock washers shall be galvanized according to AASHTO M 232.

All posts, railing, rail splices, anchor devices and angles shall be galvanized after shop fabrication according to AASHTO M-111 and ASTM A 385. Galvanized rail shall not be painted.

Railing shall be according to Section 509 of the Standard Specifications, except as noted, and will be paid for at the contract unit price per foot for STEEL RAILING, TYPE S-1.

For multi-span bridges, sufficient 1/4" x 6" x 1'-2" galvanized steel shims shall be provided to align rail between adjacent spans. Cost included with STEEL RAILING, TYPE S-1.

All field drilled holes shall be coated with an approved zinc rich paint before erection.

The 1/2" x 7" x 6" plates that come in contact with concrete shall either receive two coats of asphalt paint conforming to Section 1060.07 Type II, or 1/8" fabric bearing pads shall be placed between the plates and concrete.

The 3/4"φ high strength bolts used to connect the 6 x 4 x 3/4 angles to the post shall be tightened according to Article 505.04 (f)(2) of the Standard Specifications. The 1"φ high strength bolts connecting the angles to the concrete shall be tightened to a snug fit and given an additional 1/8 turn. The 5/8"φ cap screws in bottom of posts shall be tightened to a snug fit only.

The maximum allowable rail post spacing shall be 10'-6". The rail post spacing shown elsewhere in the plans is based on the allowable spacing for another type of rail. When this type of rail is used, the number of posts may be decreased and the post spacing increased to provide equal post spaces of 10'-6" or less.

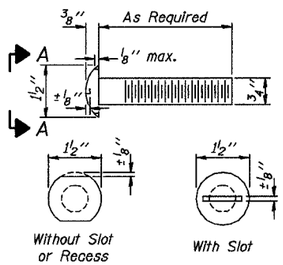

VIEW A-A
ROUND HEAD BOLT

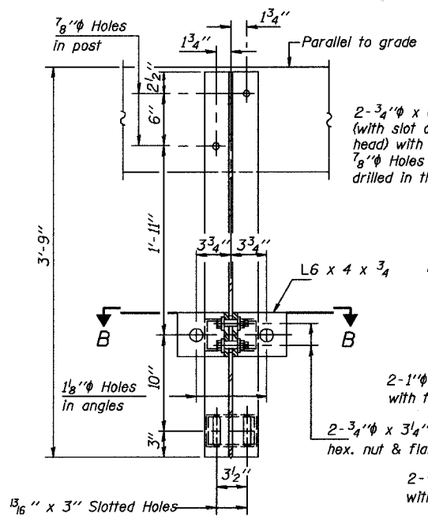

SECTION A-A

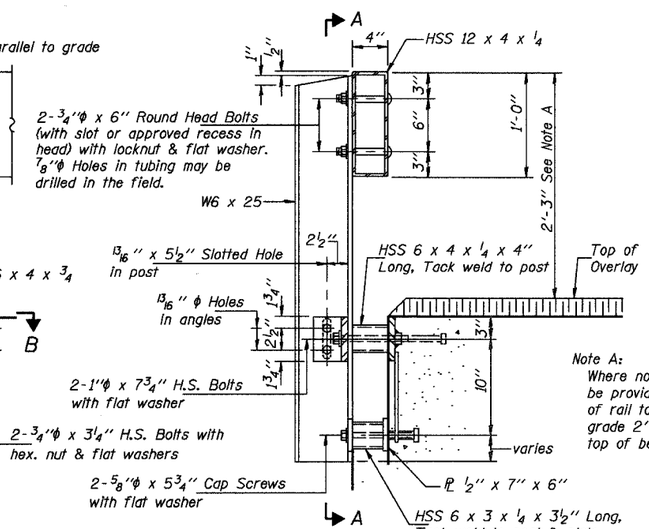

Note A:
Where no overlay is to be provided, adjust top of rail to lay parallel to grade 2'-5" max. above top of beam.

SECTION AT RAIL POST

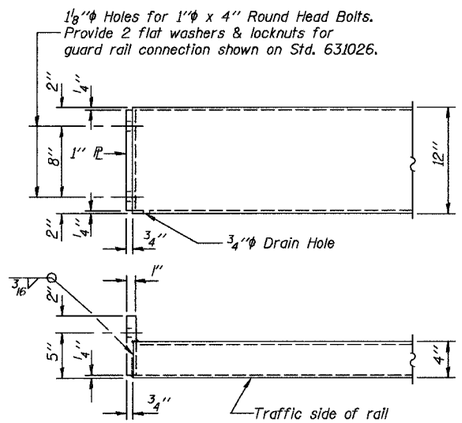

END OF RAIL DETAILS

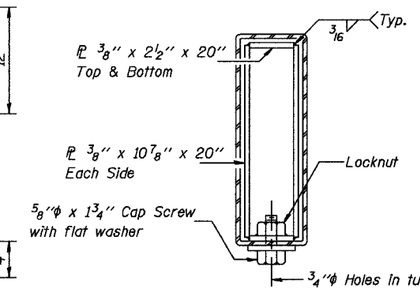

SECTION AT RAIL SPLICE

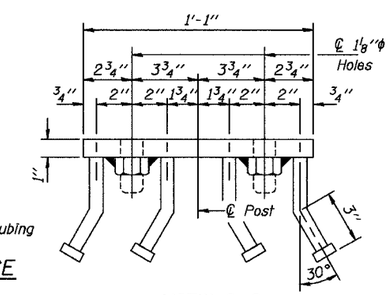

VIEW C-C

* Threaded areas shall be plugged or blocked off during casting of beam.

** Whenever the lower insert assemblies interfere with strand locations, the #3 bars shall be cut and adjusted in order to allow raising or lowering of the lower inserts. Maximum adjustment not to exceed 1/2".

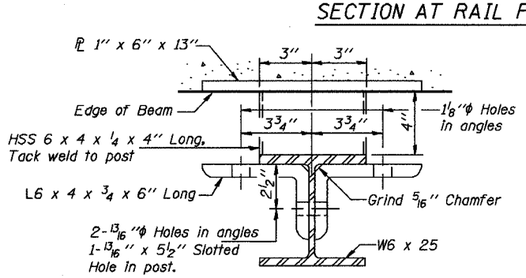

SECTION B-B

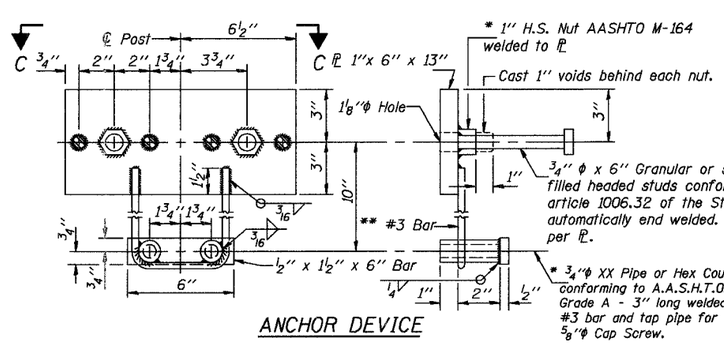

ANCHOR DEVICE

* 3/4"φ XX Pipe or Hex Coupler Nuts conforming to A.A.S.H.T.O. M291, Grade A - 3" long welded to #3 bar and tap pipe for 5/8"φ Cap Screw.

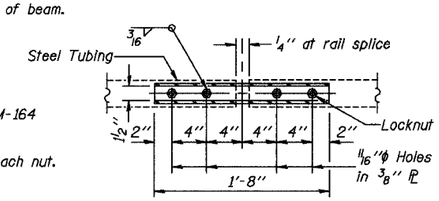

PLAN-BOTT. SPLICE PL
TYPICAL

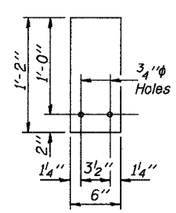

1/4" SHIM PLATE

Illinois Department of Transportation

PASSED APRIL 4, 2005
Thomas J. Domagalski
Engineer of Bridge Design
APPROVED APRIL 4, 2005
Ralph E. Anderson
Engineer of Bridges and Structures

ISSUED 1-1-1961

STEEL RAILING, TYPE S-1

STANDARD CR-TS1