STATE OF ILLINOIS
DEPARTMENT OF TRANSPORTATION

ROUTE NO.	SECTION	COUNTY	TOTAL SHEETS	SHEET NO.
F.A.I. 70	(25-4HB -1)B	EFFINGHAM	67	34
FED. ROAD DIST. NO. 7	ILLINOIS	FED. AID PROJECT-		

SHEET NO. 8
18 SHEETS

Contract #94785

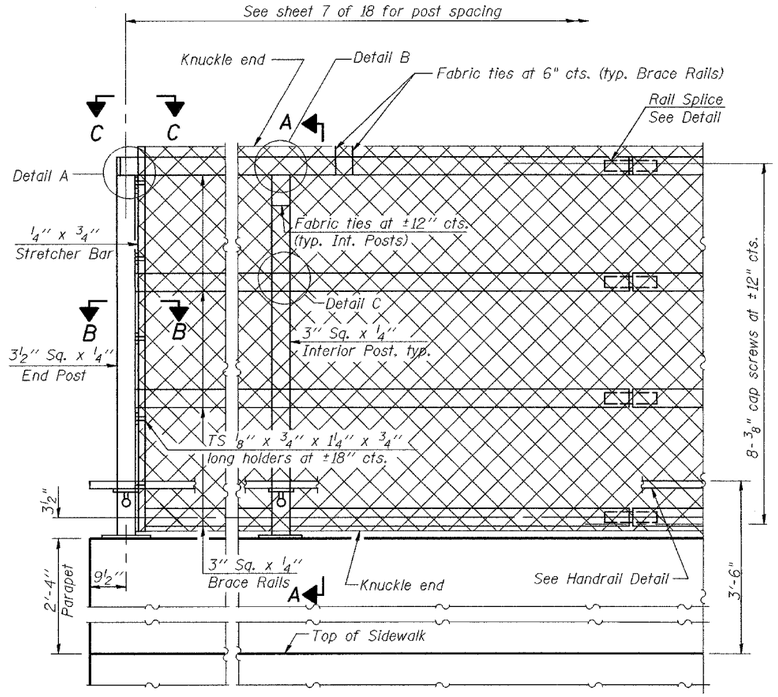

ELEVATION
(Inside Face)

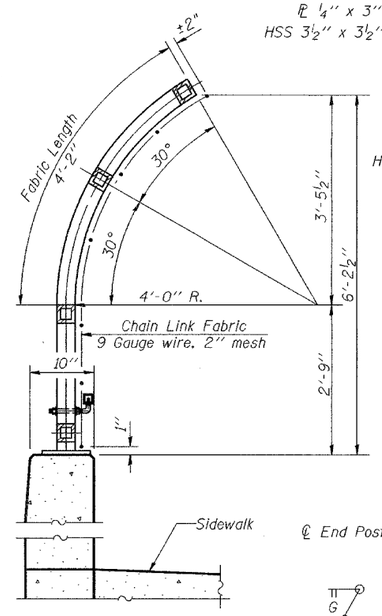

SECTION A-A

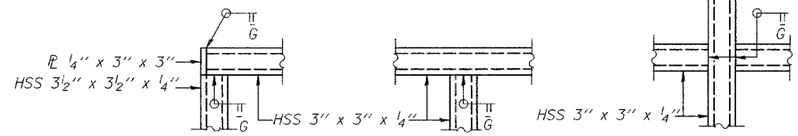

DETAIL A DETAIL B DETAIL C

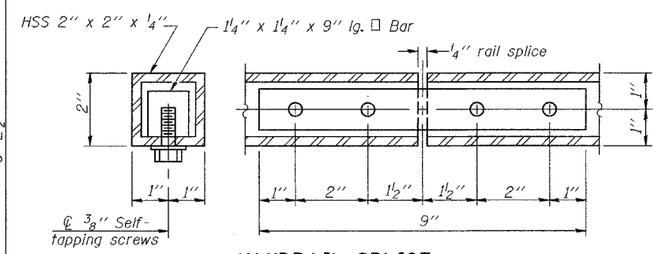

HANDRAIL SPLICE

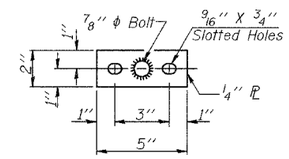

BASE PL
(Handrail)

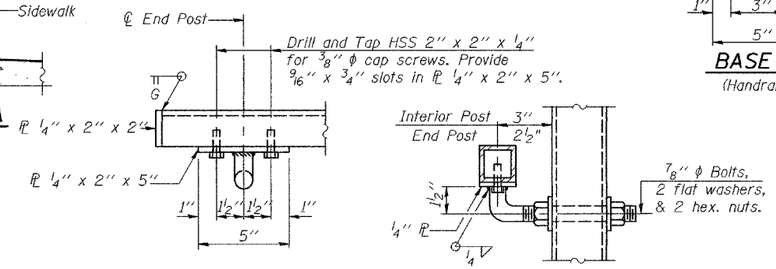

HANDRAIL DETAIL

NOTES

Railing shall be according to Section 509 of the Standard Specifications, except as noted, and will be paid for at the Contract Unit Price per foot for Bridge Fence Railing.

The 9 gauge fabric ties shall be according to Article 1006.27(d) of the Standard Specifications.

Installation of the chain link fabric shall be according to Section 664 of the Standard Specifications.

Hollow structural sections shall conform to the requirements of ASTM designation A 500, Grade B, structural steel tubing.

All other steel shapes and plates shall conform to the requirements of AASHTO M 270 Grade 36.

The chain link fabric shall be placed along Pedestrian Side as shown on Section A-A.

Stretcher bars shall be used at each end of fabric.

A minimum of one complete turn is required at ends of all fabric ties.

If the option of drilling and epoxy grouting the anchor rods is chosen, the Contractor shall use the capsule or the adhesive cartridge type anchor rods that have been previously tested and given a prior approval by the Department. The Contractor shall install these anchor rods in pre-drilled holes according to the manufacturer's recommendations and procedures. The capsule or the adhesive cartridge shall be sealed with pre-measured amounts of the adhesive chemical.

Space reinforcement to miss anchor rods.

All posts, railing, splices, anchor devices, and plates shall be galvanized after shop fabrication according to AASHTO M 111 and ASTM A 385. All bolts, nuts, washers, and anchor rods shall be galvanized according to AASHTO M 232 except stainless steel bolts as noted.

Vent holes for galvanizing shall be placed in the posts and rails at locations that will not allow the accumulation of moisture in the members.

The chain link fabric shall conform to the requirements of Article 1006.27(a)(1)a, b or c of the Standard Specifications.

Only one of the above notes would appear on Contract Plans.

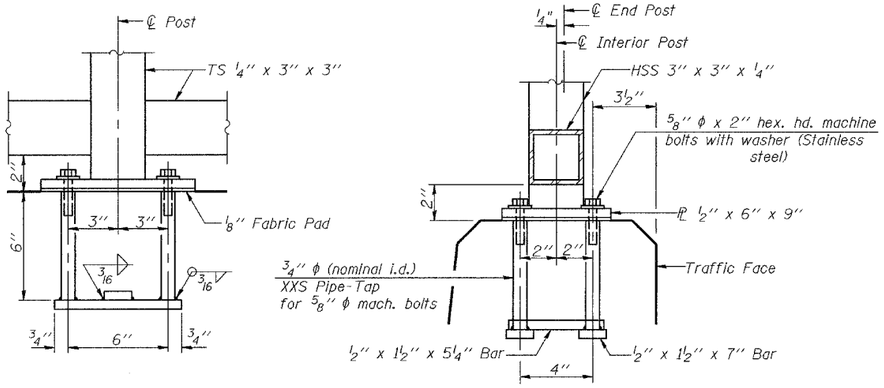

ANCHOR BOLT DETAILS

In lieu of the cast-in-place anchor device shown, the Contractor has the option of drilling and epoxy grouting 5/8" ϕ anchor rods. Embedment shall be according to the manufacturer's specifications.

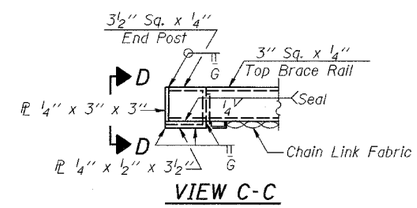

VIEW C-C

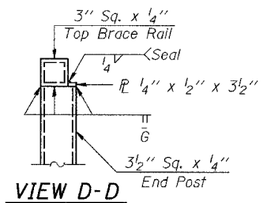

VIEW D-D

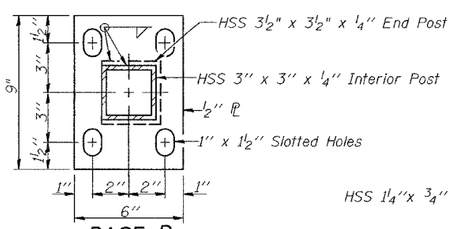

BASE PL
(10'-0" Maximum Post Spacing)

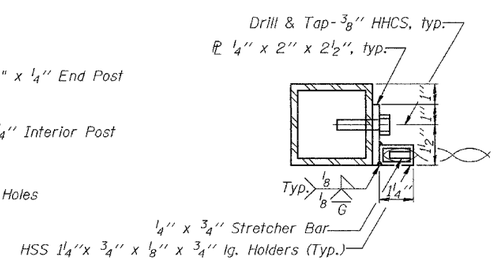

SECTION B-B

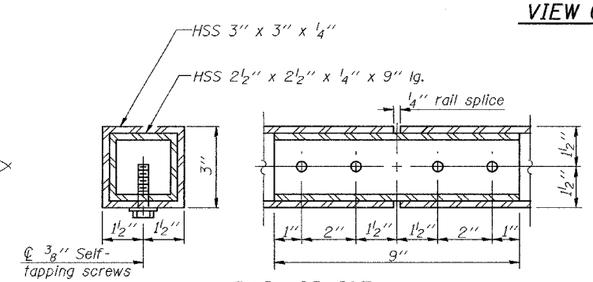

RAIL SPLICE

BILL OF MATERIAL

Item	Unit	Quantity
Bridge Fence Railing	Foot	234

BRIDGE FENCE RAILING
PARAPET MOUNTED
F.A.I. RT. 70 SEC. (25-4HB-1)B
EFFINGHAM COUNTY
STATION 49+98.84
STRUCTURE NO. 025-0102

DESIGNED	Dhruv Narielwala
CHECKED	Steve Ryan
DRAWN	R. Sommer
CHECKED	DPN/SMR

September 28 2006
EXAMINED Thomas J. Domagalski
ENGINEER OF BRIDGE DESIGN
PASSED Ralph E. Anderson
ENGINEER OF BRIDGES AND STRUCTURES

...\projects\rpg\0005\0251D2.dgn 9/26/2006 10:42:13 AM