F.A.P. RTE.	SECTION	COUNTY	TOTAL SHEETS	SHEET NO
885	(107A)B-1	JOHNSON	38	16
STA.		TO STA.		
FED. ROAD DIST. NO.		ILLINOIS	FED. AID PROJECT	

CONTRACT NO. 98776

PCC PAVEMENT CONNECTOR

EXISTING CONSTRUCTION

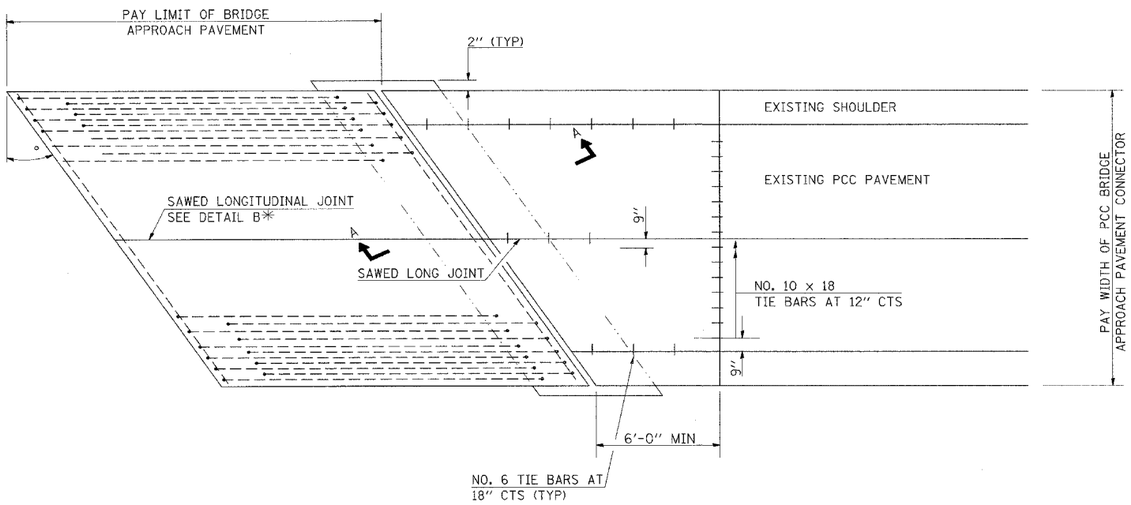

BRIDGE APPROACH PAVEMENT CONNECTOR (PCC) SPECIAL
(MODIFICATION TO STD 420401

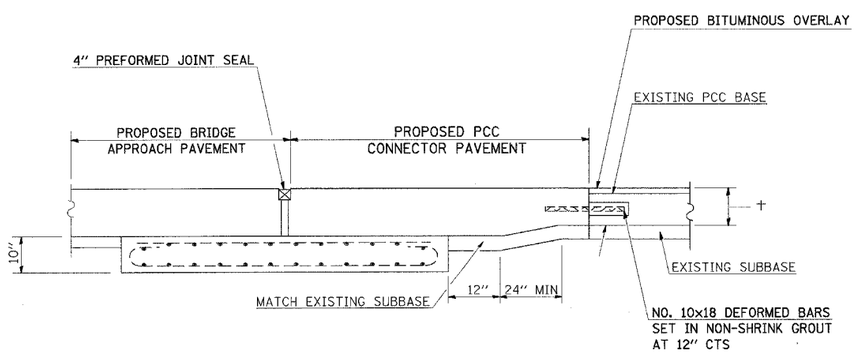

SECTION A-A - RIGID PAVEMENT

STD. 9-111

REVISIONS	
REVISED	10-11-01
REVISED	
REVISED	

PLOT DATE = 7/30/2007
FILE NAME = c:\pw_work\d923\d923\d14-8813.dgn
PLOT SCALE = 50.0000 ' / IN.
USER NAME = hallsadm

DETAIL – PCC PAVEMENT CONNECTOR (SPECIAL)