Contract # 72A81

ROUTE NO.	SECTION	COUNTY	TOTAL SHEETS	SHEET NO.
F.A.P. 753	142 BR-4	SANGAMON	24	18
FED. ROAD DIST. NO. 7	ILLINOIS	FED. AID PROJECT-		

SHEET NO. 5 / 11 SHEETS

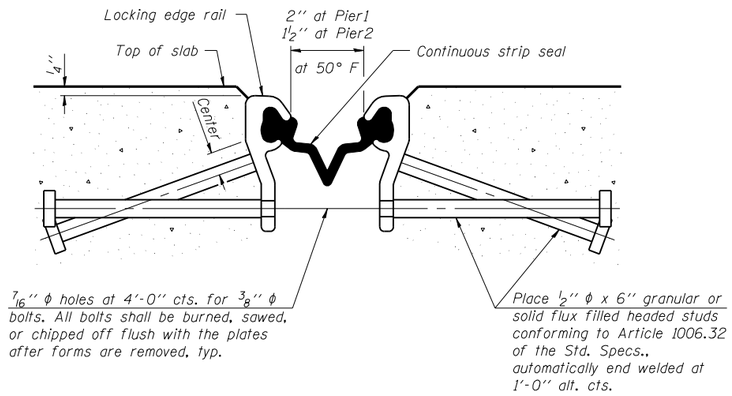

SECTION THRU STRIP SEAL JOINT

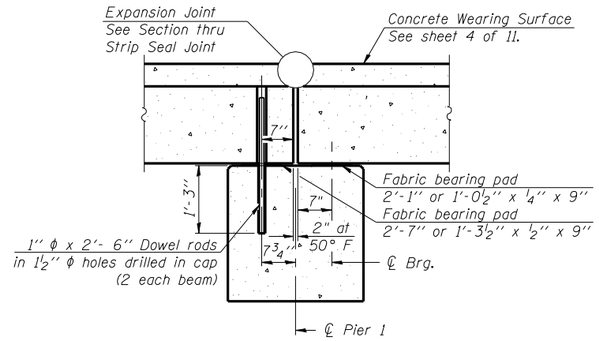

SECTION THRU PIER 2

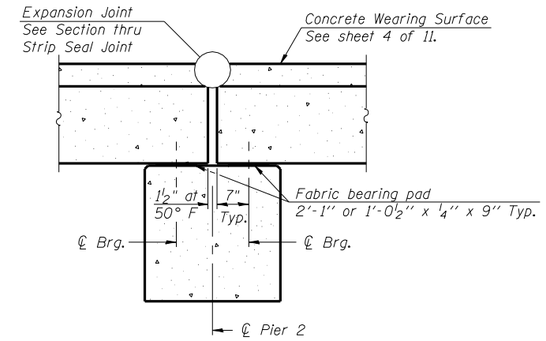

SECTION THRU PIER 1

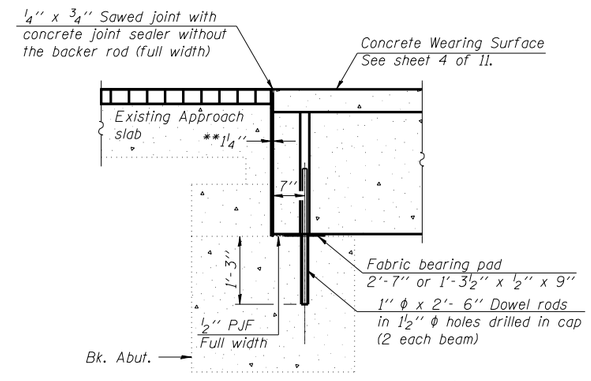

** 1¼" Jt. shall be filled with non-shrink grout. 1¼" dimension may vary to accommodate tolerance in beam lengths.

SECTION THRU ABUTMENT

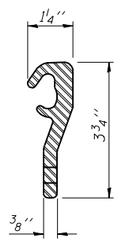

LOCKING EDGE RAIL

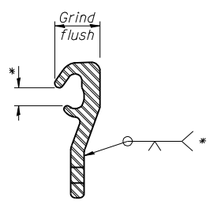

* Omit weld at seal opening.

LOCKING EDGE RAIL SPLICE

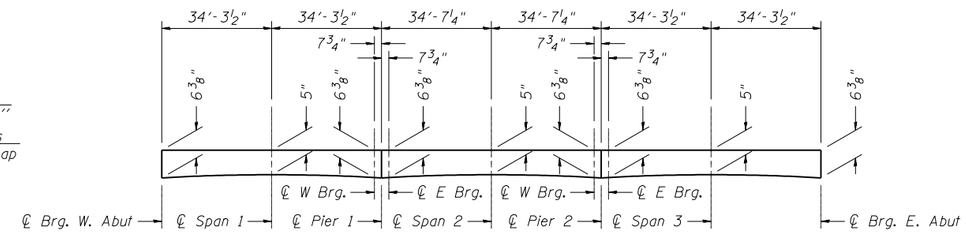

REINFORCED CONCRETE WEARING SURFACE PROFILE

Notes:

The strip seal shall be made continuous and shall have a minimum thickness of ". The configuration of the strip seal shall match the configuration of the Locking Edge Rails.

The height and thickness of the Locking Edge Rails shown are minimum dimensions. The actual configuration of the Locking Edge Rails and matching strip seal may vary from manufacturer to manufacturer. Flanged edge rails will not be allowed.

The inside of the Locking Edge Rail groove shall be free of weld residue.

Locking Edge Rails may be spliced at slope discontinuities and stage construction joints.

The manufacturer's recommended installation methods shall be followed.

All steel components shall be galvanized after fabrication according to Article 520.03 of the Standard Specifications.

Notes :

After beams have been erected, temporary retainers shall be installed and holes shall be drilled into substructure and anchor dowels placed. Dowel holes shall be filled with non-shrink grout to top of beam and allowed to cure min. 24 hrs. prior to grouting the shear keys.

All horizontal dimensions are at right angles to beam ends.

See sheet 6 of 11 for bearing pad details.

See sheet 8 of 11 for retainer details.

Ends of beams shall be aligned at the expansion joints. Any lineal variation in the beam lengths shall be placed at the fixed joint.

Dowel rods drilled in cap are included in the cost for "Precast Prestressed Concrete Deck Beam (33" Depth)"

Concrete wearing surface to be poured after grouting the shear keys.

K-Plus Engineering, Ltd.
753 WINDSOR ROAD
CHARLESTON, IL 61920
(217) 348-1900
WWW.K-PLUSENGINEERINGLTD.COM
ILLINOIS DEPARTMENT OF PROFESSIONAL REGULATION REGISTRATION #184-003685

•• THIS DOCUMENT IS THE PROPERTY OF K-PLUS ENGINEERING, LTD. AND NO PART HEREIN SHALL BE USED •• EXCEPT FOR THIS SPECIFIC PROJECT WITHOUT THE WRITTEN CONSENT OF K-PLUS ENGINEERING, LTD.

REVISIONS	
NAME	DATE

ILLINOIS DEPARTMENT OF TRANSPORTATION

SUPERSTRUCTURE DETAILS

IL RTE. 104 OVER HORSE CREEK
FAP 753 - SECTION 142BR-4
SANGAMON COUNTY
STA 989+90.00
SN 084-0176

DATE: 08-01-07

DRAWN BY: ADG
CHECKED BY: DF