CONTRACT NO. 70641

F.A.I. RTE.	SECTION	COUNTY	TOTAL SHEETS	SHEET NO.
74	*	MCLEAN	41	28

* (57-21B&57-22B)&BDR

SHEET 8 OF 14

JOINT REPAIR AT EAST ABUTMENT

SN 057-0129

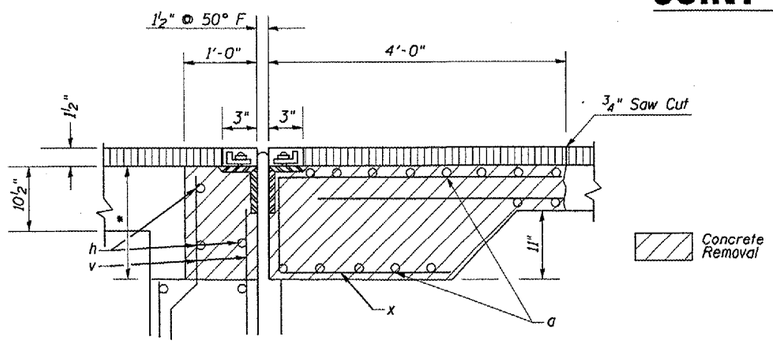

* Varies from 1'-3⅝" to 1'-8"

Note: Removal of Existing Neoprene Expansion Joint is included in the cost of Concrete Removal

EXISTING SECTION AT EAST ABUTMENT

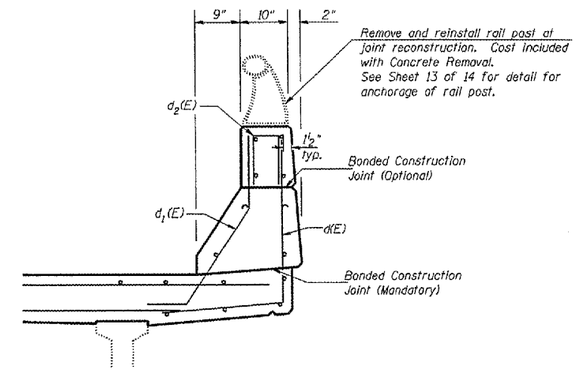

SECTION THRU PARAPET

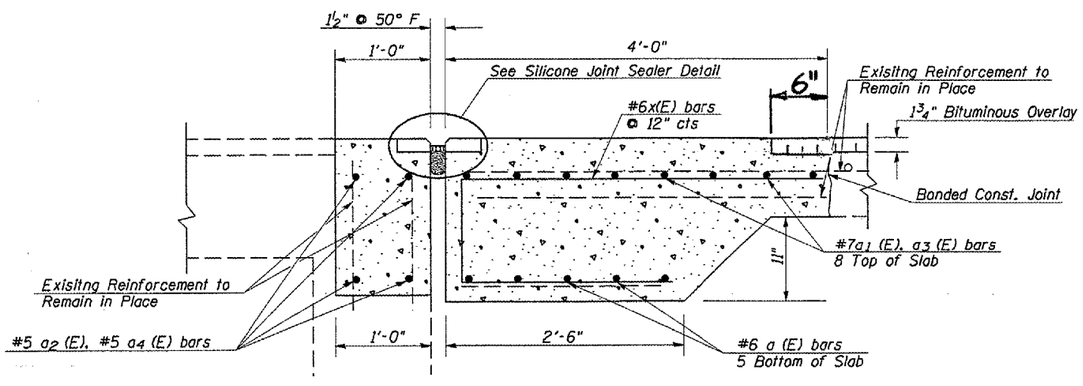

PROPOSED SECTION AT EAST ABUTMENT

New Concrete

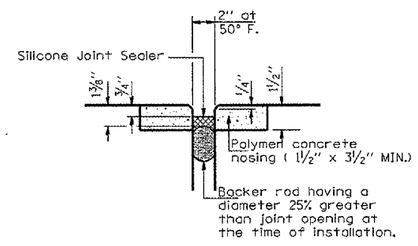

SILICONE JOINT SEALER DETAIL

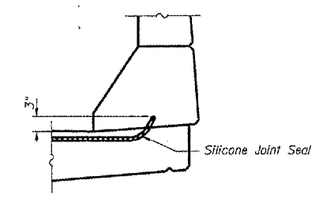

TYPICAL END OF SEAL TREATMENT AT EXPANSION JOINT

BILL OF MATERIAL

Item	Unit	TOTAL
Concrete Removal	Cu. Yd.	11.85
Concrete Superstructure	Cu. Yd.	11.85
Polymer Concrete	Cu. Ft.	3.2
Silicone Joint Sealer, 1½"	Foot	43

ILLINOIS DEPARTMENT OF TRANSPORTATION

JOINT REPAIR AT EAST ABUTMENT

F.A.I. ROUTE 74

SECTION (57-21B&57-22B)&BDR

McLEAN COUNTY

SN 057-0129

SCALE: NA — DRAWN BY: RC

DATE: 03/28/07 — CHECKED BY:

PLOT DATE : 8/17/2007
FILE NAME : c:\projects\d581187 (d81\70641cover.dgn
PLOT SCALE : 185.8824 ' / IN.
USER NAME : calleardw