CONTRACT NO. 66690

F.A.P. RTE.	SECTION	COUNTY	TOTAL SHEETS	SHEET NO.
681	115 BR	LIVINGSTON	32	27
STA.		TO STA.		
FED. ROAD DIST. NO.	ILLINOIS	FED. AID PROJECT		

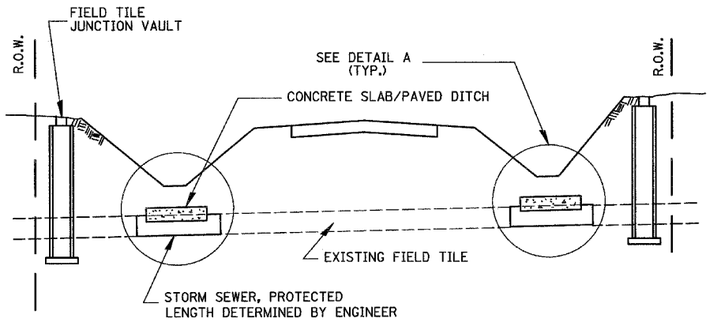

FIELD TILE REPLACEMENT

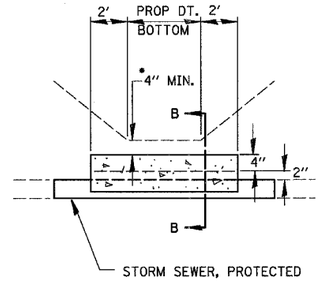

DETAIL A

NO SCALE

*IF A 4" COVER CAN NOT BE PROVIDED A PAVED DITCH SHALL BE CONSTRUCTED AS SHOWN IN DETAIL C.

NOTES

1. WIDTH OF CONCRETE SLAB SHALL BE THE SAME AS THE TRENCH WIDTH IN ACCORDANCE WITH SECTION 550 OF THE STD. SPECIFICATIONS, OR 3' MIN.
2. CONCRETE FOR SLAB, HEADWALL AND PAVED DITCH SHALL BE PAID FOR AT THE CONTRACT UNIT PRICE PER CUBIC YARD FOR MISCELLANEOUS CONCRETE."
3. COST OF FURNISHING AND INSTALLING WIRE MESH SHALL BE INCLUDED IN THE CONTRACT UNIT PRICE PER CUBIC YARD FOR MISCELLANEOUS CONCRETE. WIRE MESH TO WEIGH NOT LESS THAN 58# PER 100 SQ. FT.

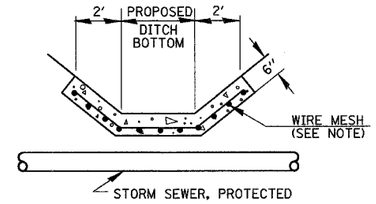

DETAIL C

NO SCALE

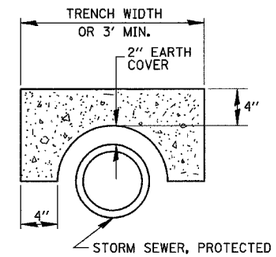

SECTION B-B

ALTERNATE MATERIALS FOR WALLS	T
PRECAST REINFORCED CONCRETE RISERS	4"
CONCRETE MASONRY UNIT	5"
MONOLITHIC CONCRETE	6"
BUILDING BRICK, GRADE SW FROM CLAY OR SHALE	8"
CONCRETE BUILDING BRICK, GRADE A	8"

NOTES

1. THE CONTRACT UNIT PRICE FOR FIELD TILE JUNCTION VAULT SHALL INCLUDE THE COST OF FURNISHING AND PLACING THE FRAME AND GRATE OR PRECAST CONCRETE LID AND WHEN REQUIRED, THE SAND CUSHION.
2. ALL FIELD TILE JUNCTION VAULTS SHALL BE 2'-0" IN DIAMETER UNLESS OTHERWISE NOTED ON THE PLANS.

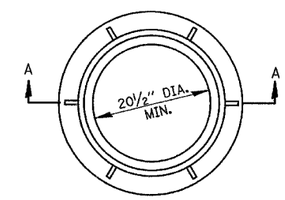

± 145#

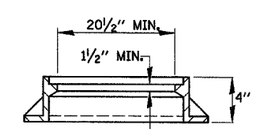

SECTION A-A

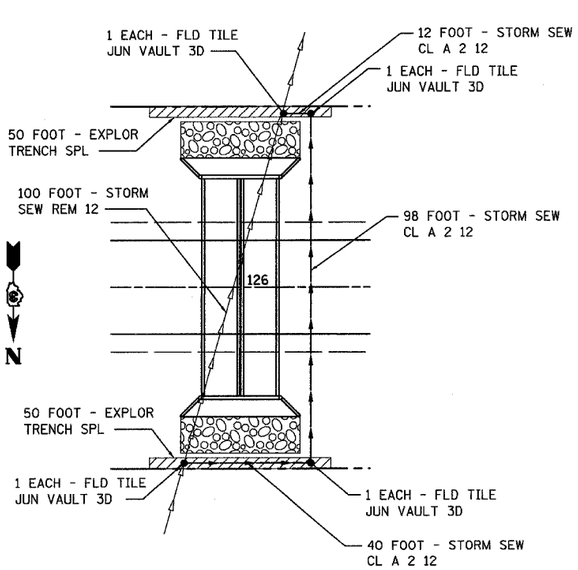

FIELD TILE RELOCATION PLAN

NOTE: THE QUANTITIES PROVIDED FOR THE FIELD DRAIN RELOCATION ARE ESTIMATED. THE PROPOSED GRADES AND ACTUAL QUANTITIES WILL BE DETERMINED BY THE ENGINEER ONCE THE FIELD TILE NEAR THE RIGHT-OF-WAY LINE IS LOCATED USING EXPLORATORY TRENCHES. THE FIELD TILE JUNCTION VAULTS SHALL BE LOCATED WITH RIGHT-OF-WAY

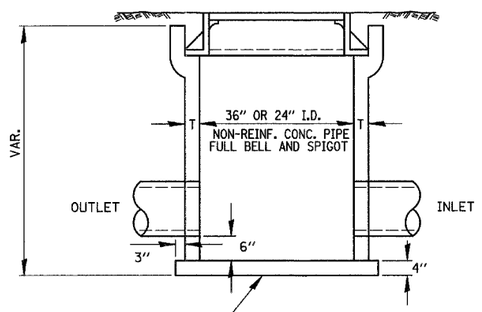

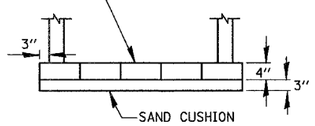

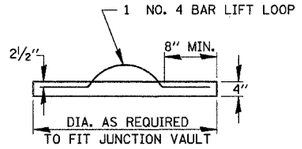

FIELD TILE JUNCTION VAULT

REVISIONS	
NAME	DATE

ILLINOIS DEPARTMENT OF TRANSPORTATION

FIELD TILE REPLACEMENT

FAP ROUTE 681
SECTION 115 BR
LIVINGSTON COUNTY

PLOT DATE = 8/8/2007
FILE NAME = H:\P\25854\Files Copied from M Drive\Microstation\Working Project Files\sheets01.dgn
PLOT SCALE = 59.8000 ' / IN.
USER NAME = 4USER4