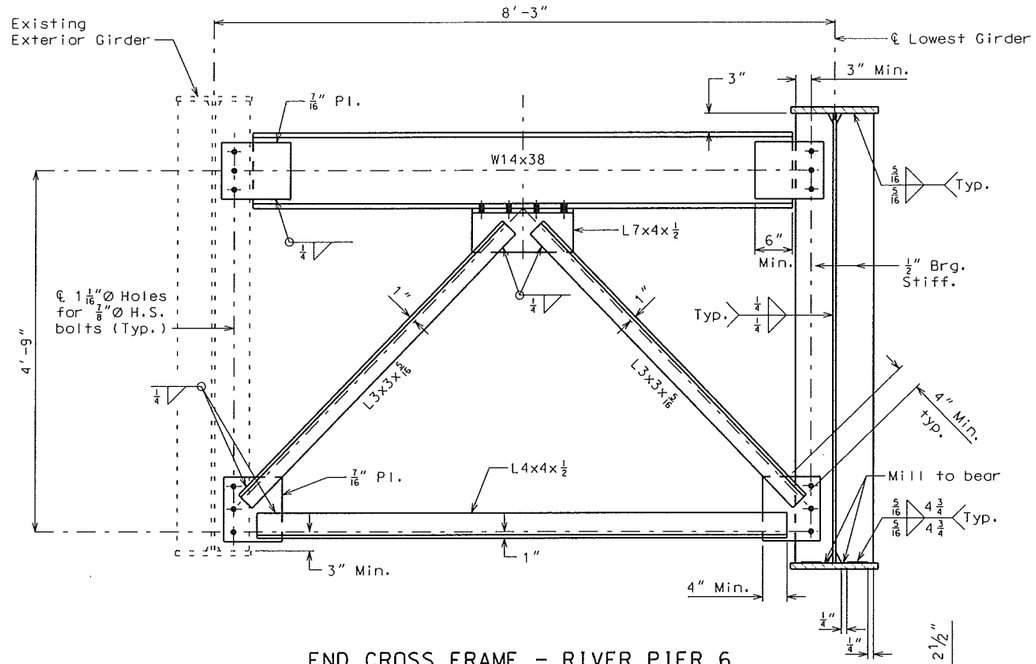

END CROSS FRAME - RIVER PIER 6

Note:
Two hardened washers shall be required for each set of oversized holes.

For modification to Finger Plate Expansion Device at River Pier 6, see Bridge A15011 plans.

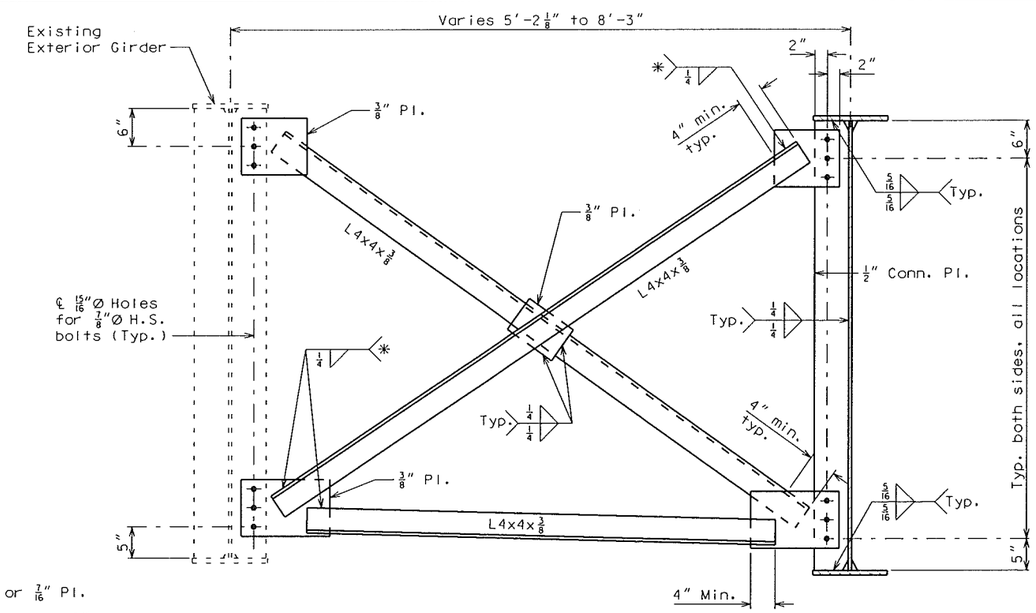

INTERMEDIATE CROSS FRAME

Note:
✱ Fillet weld angles along 3 sides on one face of gusset plate.

Intermediate web stiffener plate and diaphragm spacing may vary from plan dimensions by a maximum of 3" for diaphragm to connect to the intermediate web stiffener plate.

FOR INFORMATION ONLY

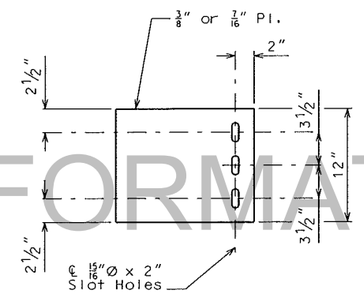

GUSSET PLATE DETAIL

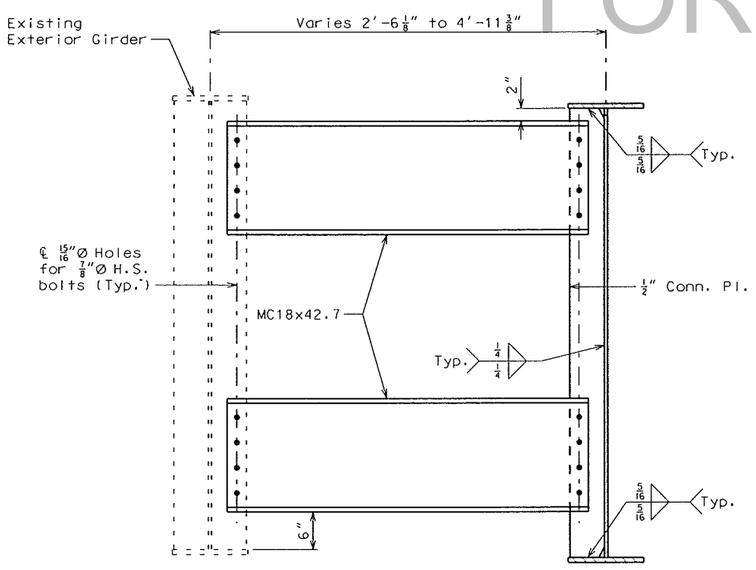

INTERMEDIATE DIAPHRAGM

Note:
At the contractor's option, holes in the diaphragm plate of non slab bearing diaphragms may be made 3/16" larger than the nominal diameter of the bolt. A hardened washer shall be used under the bolt head and nut when this option is used. Holes in the girder diaphragm connection plate or transverse web stiffener shall be standard size.

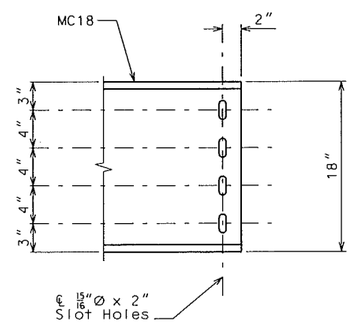

INTERMEDIATE DIAPHRAGM DETAIL

Note:
Field drill existing stiffeners such that holes align with bottom of slot holes in gusset plates and MC18 diaphragms to allow for dead load deflection of new girder.

All bolts shall be finger tight until new concrete pour including barrier curb has been completed.

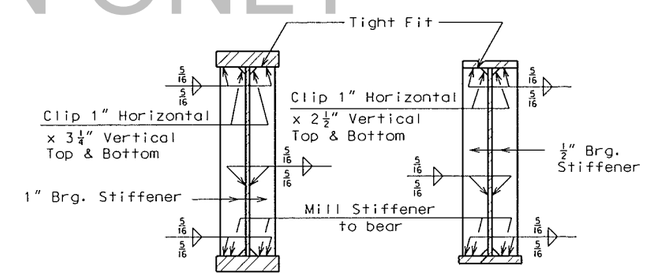

SECTION AT PIERS 1 THRU 4

SECTION AT RIVER PIER 6 AND APPROACH PIER 5

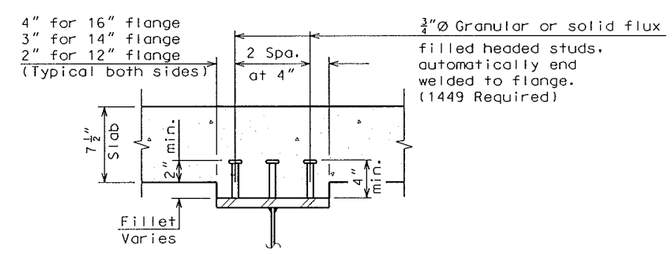

SHEAR CONNECTOR DETAIL

STEEL DETAILS

Detailed Nov 2015
Checked Nov 2015

Note: This drawing is not to scale. Follow dimensions.

LICENSED STRUCTURAL ENGINEER STEPHEN E. ALSBURY 081-5281 STATE OF ILLINOIS
EXPIRES 11-30-16

DATE	12/1/2015
DATE PREPARED	
ROUTE	I-64
STATE	IL
DISTRICT	STL
SHEET NO.	28
COUNTY	ST. CLAIR
JOB NO.	J6I2377C/J6I2377D
CONTRACT ID.	–
PROJECT NO.	–
BRIDGE NO.	082-0005

DESCRIPTION | DATE

MISSOURI HIGHWAYS AND TRANSPORTATION COMMISSION
105 WEST CAPITOL
JEFFERSON CITY, MO 65102
1-888-ASK-MODOT (1-888-275-6636)

ABNA
4140 Lindell Boulevard
St. Louis, MO 63104
314-454-0222
Certificate of Authority: 001507

REV.