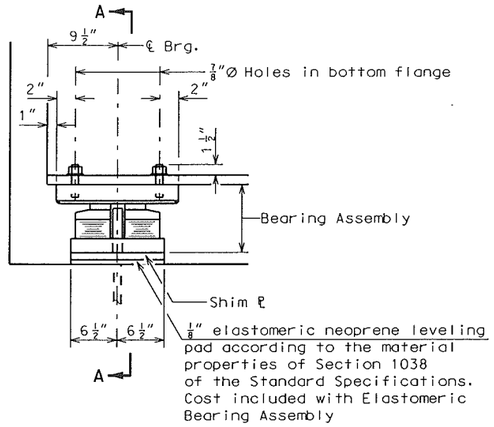

ELEVATION AT RIVER PIER 6

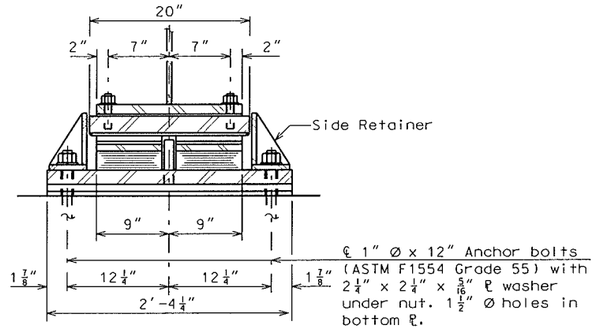

SECTION A-A

ELASTOMERIC EXP. BRG.

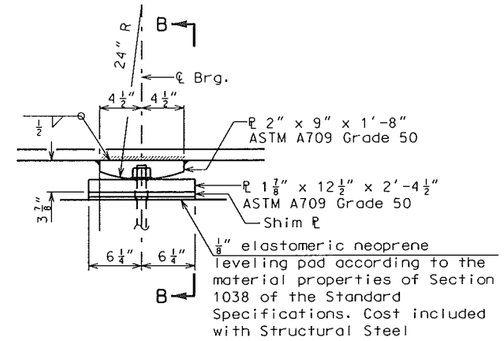

ELEVATION AT PIER 3

FIXED BEARING

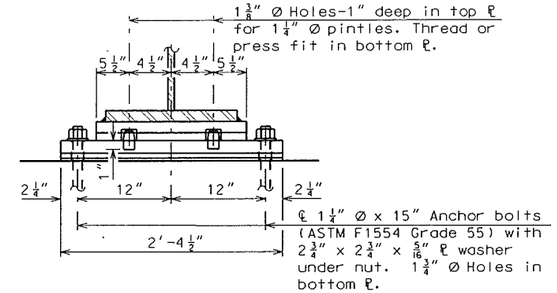

SECTION B-B

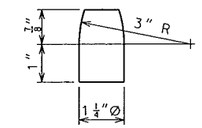

PINTLE

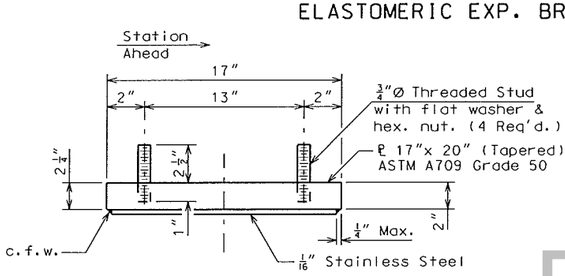

TOP BEARING ASSEMBLY

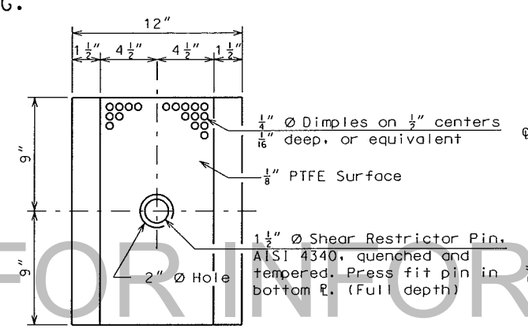

PLAN-PTFE ELASTOMERIC BRG.

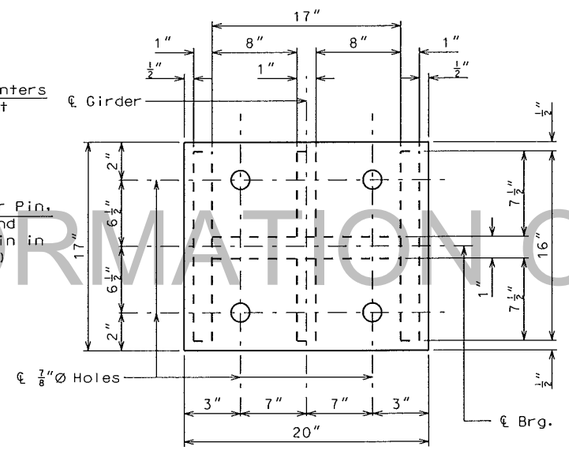

PLAN

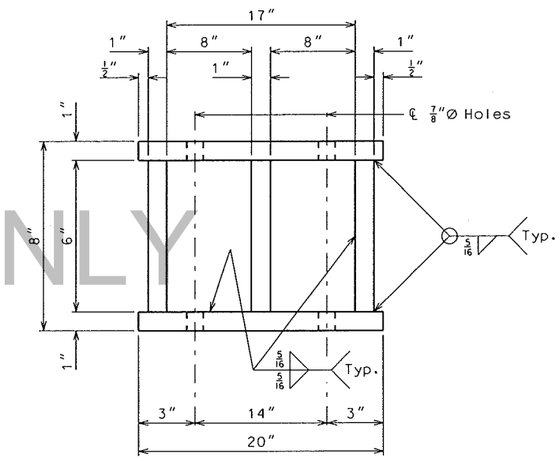

ELEVATION

FABRICATED BEARING BOLSTER AT RIVER PIER 6

All plates shall be ASTM A709 Grade 50

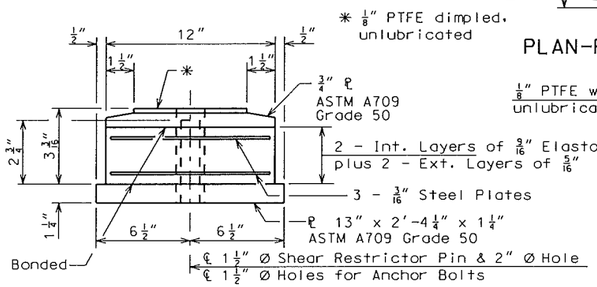

BOTTOM BEARING ASSEMBLY

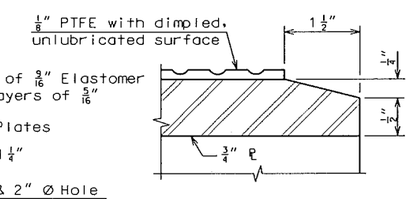

SECTION THRU PTFE

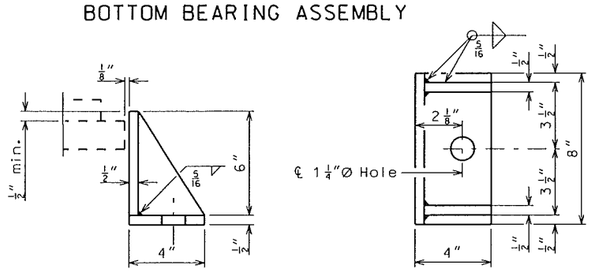

SIDE RETAINER

Equivalent rolled angle with stiffeners will be allowed in lieu of welded plates.

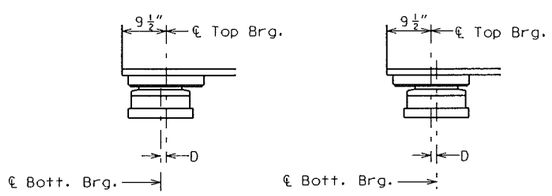

BELOW 50°F.
(Move bott. brg. away from fixed brg.)

ABOVE 50°F.
(Move bott. brg. toward fixed brg.)

SETTING ANCHOR BOLTS AT EXP. BRG.

D=1/8" per each 100' of expansion for every 15° temp. change from the normal temp. of 50°F.

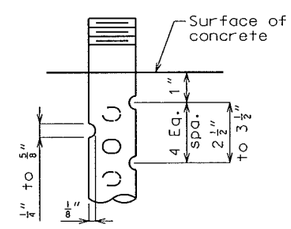

DETAIL FOR 3/4"Ø THRU 2 1/2"Ø ANCHOR BOLTS

SWEDGE ANCHOR BOLT DETAILS

Notes:

Anchor bolts shall be 1 1/4" ASTM F1554 Grade 55 swedged bolts and shall extend 15" into the concrete with ASTM A563 Grade A Hex or Heavy Hex nuts. Actual manufacturer's certified mill test reports (chemical and mechanical) shall be provided. Swedging shall be 1" less than extension into the concrete.

All structural steel for the anchor bolts and heavy hexagon nuts shall be coated with a minimum of two coats of inorganic zinc primer (5 mils minimum).

Neoprene Elastomeric Pads shall be 60 Durometer.

TYPE N PTFE BEARING DETAILS AT RIVER PIER 6 AND FIXED BEARING AT PIER 3

Detailed Nov 2015
Checked Nov 2015

Note: This drawing is not to scale. Follow dimensions.

FOR INFORMATION ONLY

LICENSED STRUCTURAL ENGINEER STEPHEN E. ALSBURY 081-5281 STATE OF ILLINOIS
EXPIRES 11-30-16

DATE	12/1/2015
DATE PREPARED	
ROUTE	I-64
STATE	IL
DISTRICT	STL
SHEET NO.	32
COUNTY	ST. CLAIR
JOB NO.	J6I2377C/J6I2377D
CONTRACT ID.	–
PROJECT NO.	–
BRIDGE NO.	082-0005

DATE	DESCRIPTION

MISSOURI HIGHWAYS AND TRANSPORTATION COMMISSION
105 WEST CAPITOL
JEFFERSON CITY, MO 65102
1-888-ASK-MODOT (1-888-275-6636)

ABNA
4140 Lindell Boulevard
St. Louis, MO 63104
314-454-0222
Certificate of Authority: 001507

REV.