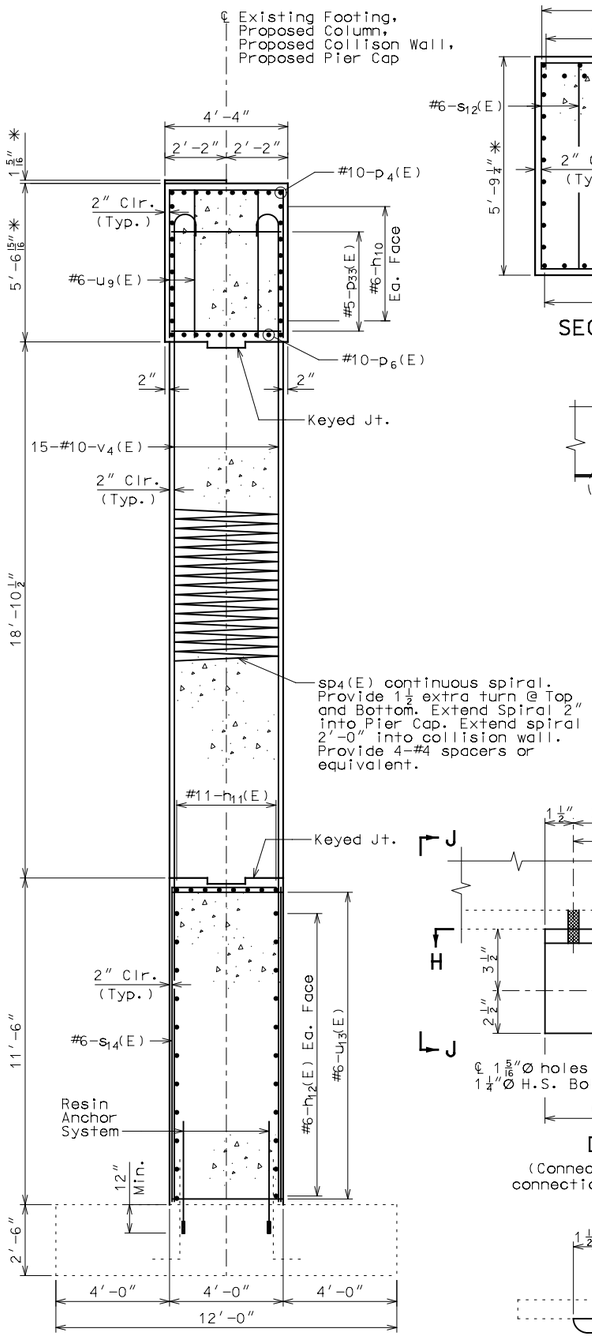

SECTION A-A

Note: Sect. F-F similar except for cap dimensions, cap reinforcement and and top bars in collision wall.

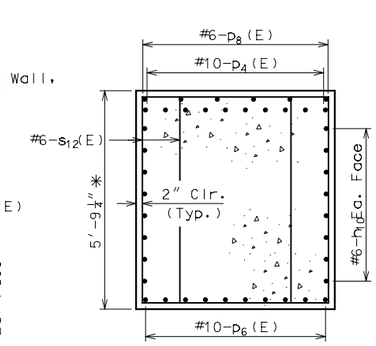

SECTION B-B

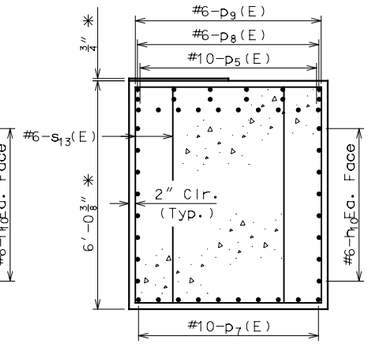

SECTION C-C

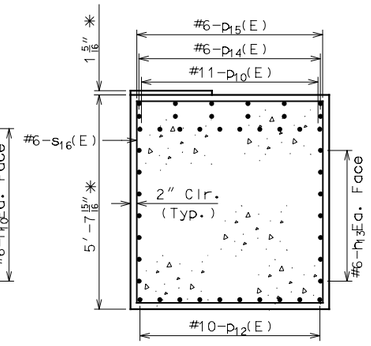

SECTION D-D

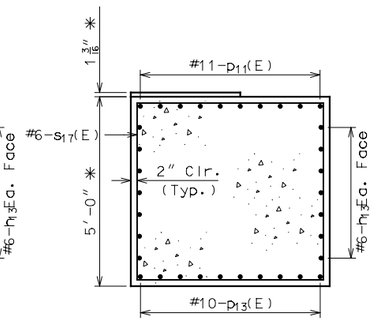

SECTION E-E

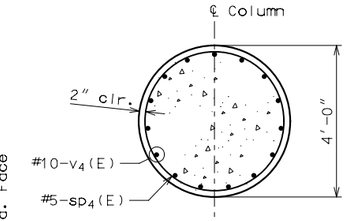

SECTION G-G

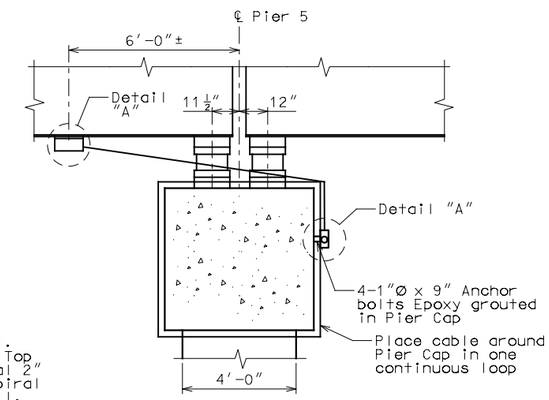

SEISMIC RESTRAINER DETAIL
(New Girder 1A shown)

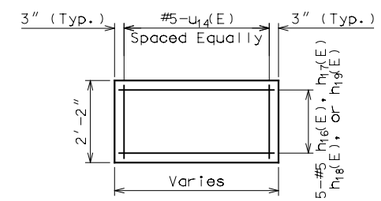

PLAN OF
REINFORCED PEDESTAL

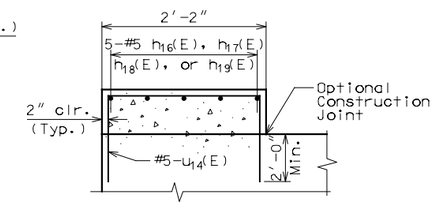

SECTION OF
REINFORCED PEDESTAL

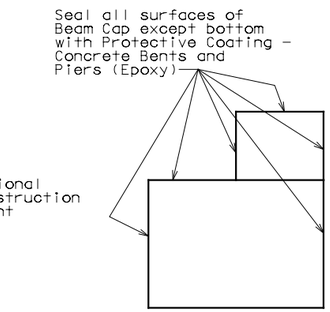

PROTECTIVE COATING

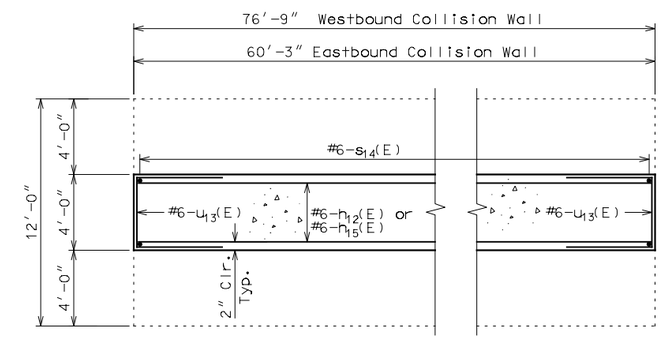

COLLISION WALL

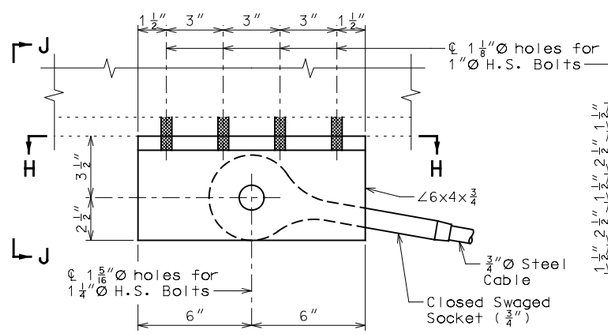

DETAIL "A"
(Connection to girder shown, connection to pier cap similar)

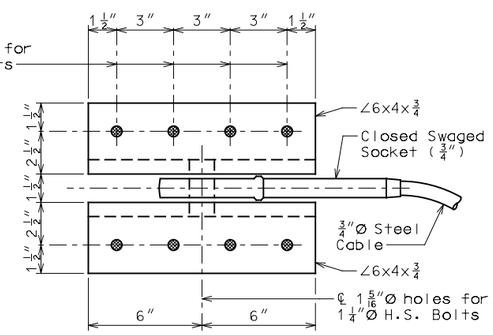

SECTION H-H
(Bottom flange not shown)

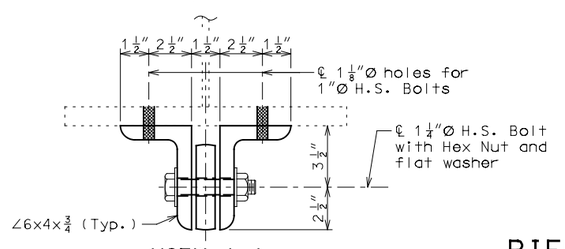

VIEW J-J

Notes:

Bearing orientation, bearing spacing and anchor bolt spacing shown are taken from As-Built drawings. It is the contractor's responsiblity to verify these prior to forming the pier cap. Contractor shall reinstall the bearings in the same location and orientation as they are currently installed on the existing pier cap.

Rienforcing steel shall be shifted to clear anchor bolt wells by at least 1/2″.

See Sheet No. 51 for bill of reinforcing steel for Pier 5 Westbound and Eastbound.

Seismic Retrainer shall be reattached at all existing locations. Holes in existing girder flange shall be utilized. Holes in pier cap shall be drilled using the holes in the Seismic Restrainer Assembly angles as a template, but should avoid Pier Cap reinforcement.

The cost for reattaching existing seismic restrainers shall be considered incidental to the cost of Pier 5 Eastbound.

The cost for Seismic Restrainer to be paid for in the contract per each price for Earthquake Restainer Assemblies.

(✱) - Dimensions are based on As-Built beam seat elevations. It is contractor's responsibility to verify dimensions in field and adjust new cap depth as necessary without extra payment.

Prior to installation of seismic restrainers, the pier cap shall be rounded at each location where the restrainer cable will contact the edge of pier cap. Means of rounding the pier cap shall be determined by the contractor and approved by the engineer.

PIER 5 MISC. DETAILS

Note: This drawing is not to scale. Follow dimensions.

Sheet No. 15 of 73

Detailed Oct 2015
Checked Oct 2015

STATE OF ILLINOIS
MICHAEL B. QUIRIN
081-006070
CHICAGO, ILLINOIS
LICENSED STRUCTURAL ENGINEER

THIS SHEET HAS BEEN SIGNED, SEALED AND DATED ELECTRONICALLY

DATE PREPARED	
11/23/2015	
ROUTE	STATE
I-64	IL
DISTRICT	SHEET NO.
STL	15
COUNTY	
ST. CLAIR	
JOB NO.	
J6I2377C/J6I2377D	
CONTRACT ID.	
—	
PROJECT NO.	
—	
BRIDGE NO.	
082-0005	

DESCRIPTION

DATE

MISSOURI HIGHWAYS AND TRANSPORTATION COMMISSION
105 WEST CAPITOL
JEFFERSON CITY, MO 65102
1-888-ASK-MODOT (1-888-275-6636)

HDR Engineering, Inc.
401 S. 18th Street
Suite 300
St. Louis, MO 63103-2267
314-425-8300
Certificate of Authority: 000856

c:\pwworking\oma\d1250603\B_0820005_015_J6I2377C.dgn 1:40:36 PM 11/23/2015