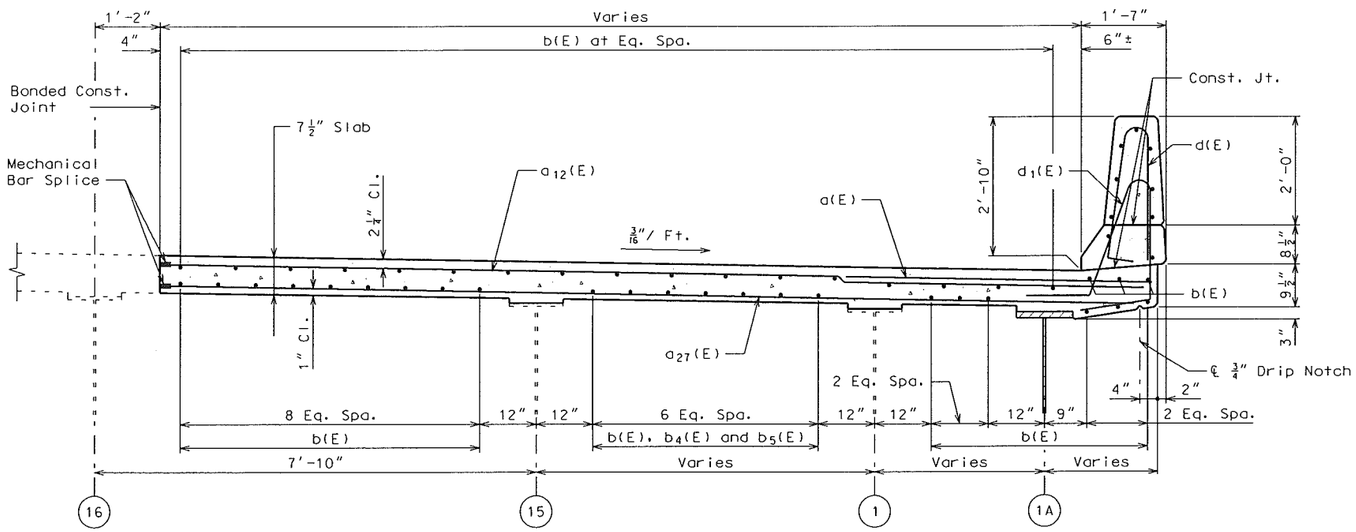

SECTION E-E

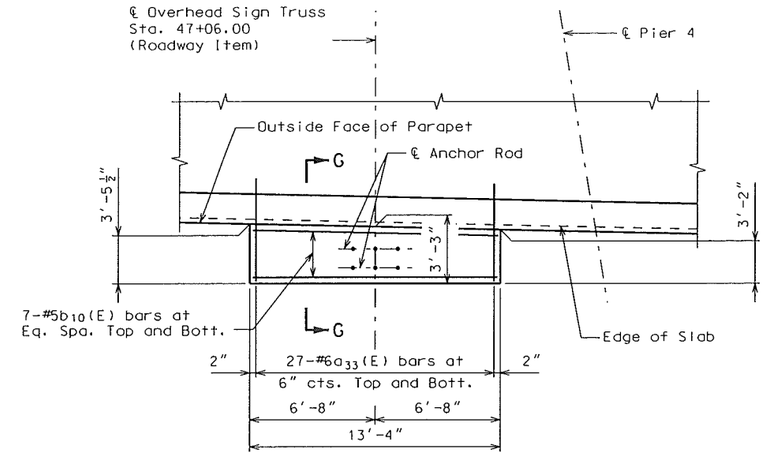

PLAN-OVERHEAD SIGN SUPPORT

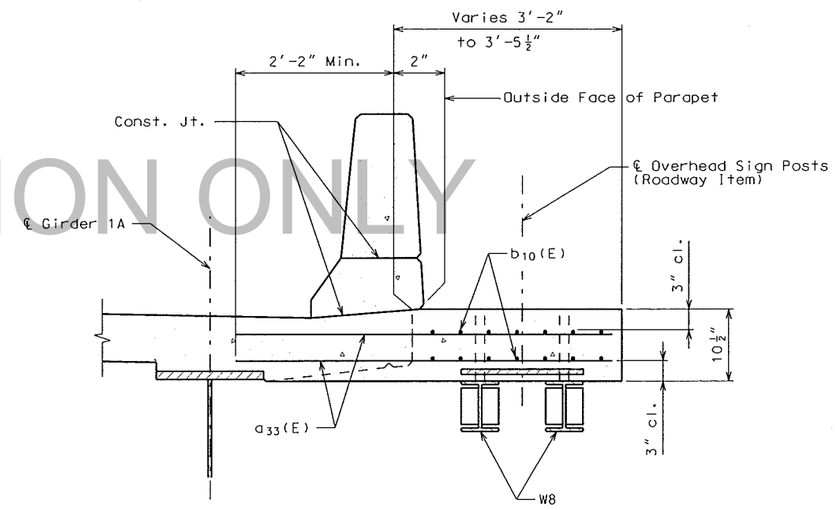

SECTION G-G

Note:
Anchor rods for sign posts shown for information only. Location shall be same as existing. Anchor rods shall be 1¼" dia. x 1'-5" long with 6" thread, 12 req'd. Provide 3 nuts and washers per rod. Anchor rods shall be installed same as existing, cost incidental to Slab on Steel.

FOR INFORMATION ONLY

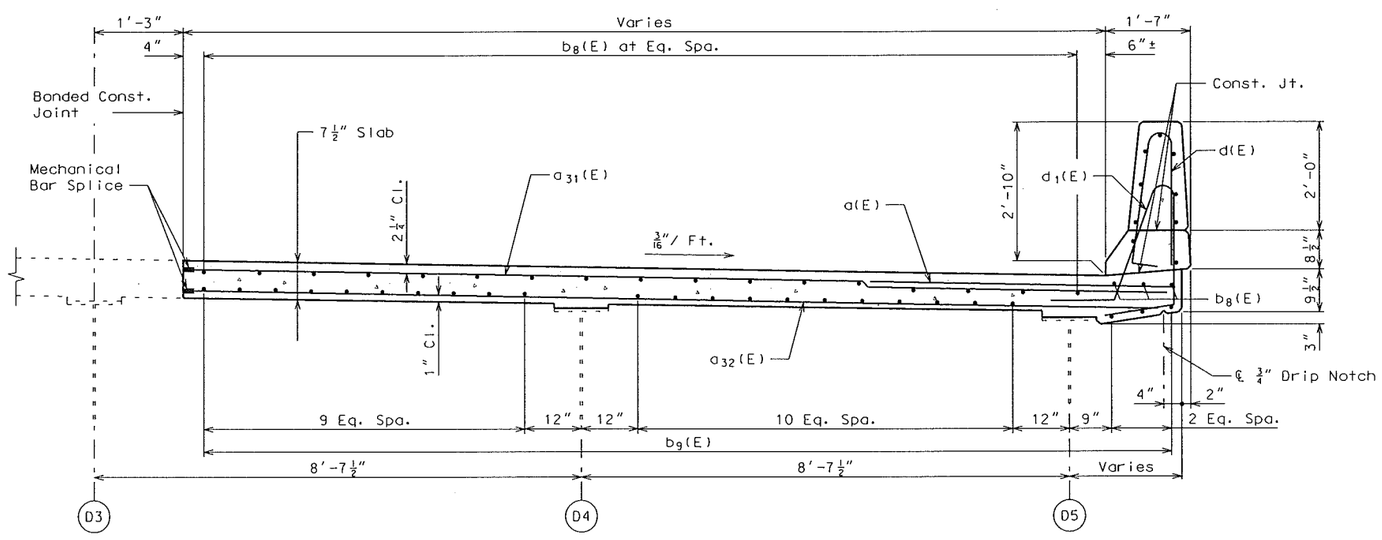

SECTION F-F

TYPICAL SLAB SECTIONS

LICENSED STRUCTURAL ENGINEER
STEPHEN E. ALSBURY
081-5281
STATE OF ILLINOIS
EXPIRES 11-30-16

DATE	12/1/2015
DATE PREPARED	
ROUTE	I-64
STATE	IL
DISTRICT	STL
SHEET NO.	39
COUNTY	ST. CLAIR
JOB NO.	J6123770/J6123770
CONTRACT ID.	–
PROJECT NO.	–
BRIDGE NO.	082-0005

DESCRIPTION

DATE

MISSOURI HIGHWAYS AND TRANSPORTATION COMMISSION
105 WEST CAPITOL
JEFFERSON CITY, MO 65102
1-888-ASK-MODOT (1-888-275-6636)

ABNA
4140 Lindell Boulevard
St. Louis, MO 63104
314-454-0222
Certificate of Authority: 001507

REV.

Detailed Nov 2015
Checked Nov 2015

Note: This drawing is not to scale. Follow dimensions.