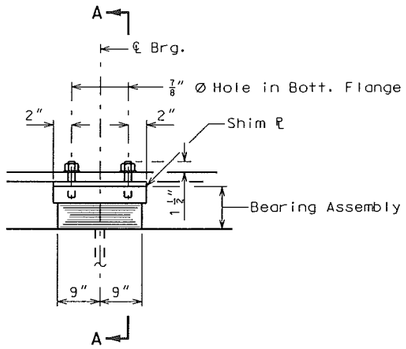

ELEVATION AT PIER 2

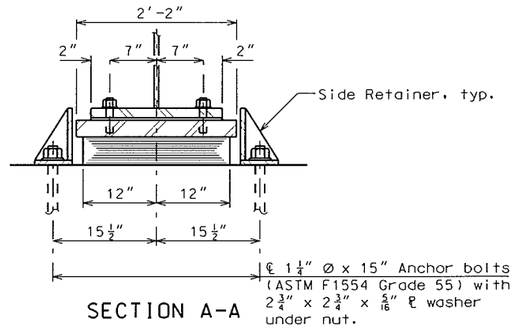

SECTION A-A

ELASTOMERIC EXP. BRG.

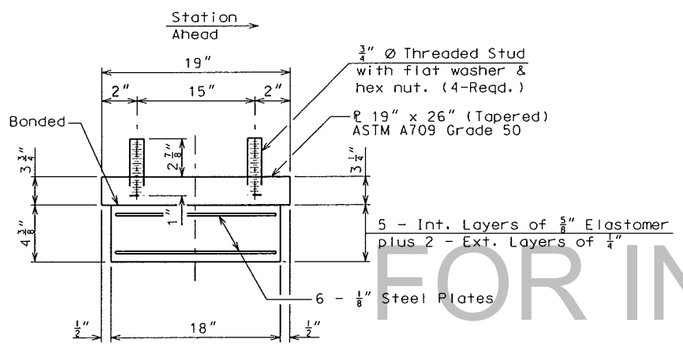

BEARING ASSEMBLY

Note:
Shim plates shall not be placed under Bearing Assembly.

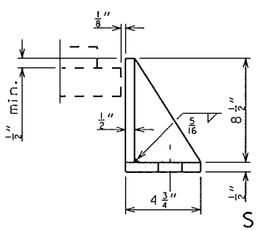

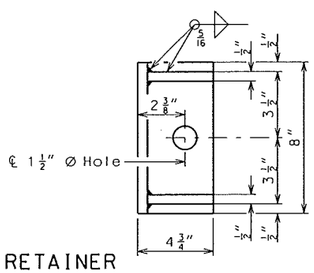

SIDE RETAINER

Equivalent rolled angle with stiffeners will be allowed in lieu of welded plates.

Notes:
Anchor bolts shall be 1 1/4" ASTM F1554 Grade 55 swedged bolts and shall extend 15" into the concrete with ASTM A563 Grade A Hex or Heavy Hex nuts. Actual manufacturer's certified mill test reports (chemical and mechanical) shall be provided. Swedging shall be 1" less than extension into the concrete.

All structural steel for the anchor bolts and heavy hexagon nuts shall be coated with a minimum of two coats of inorganic zinc primer (5 mils minimum).

Neoprene Elastomeric Pads shall be 60 Durometer.

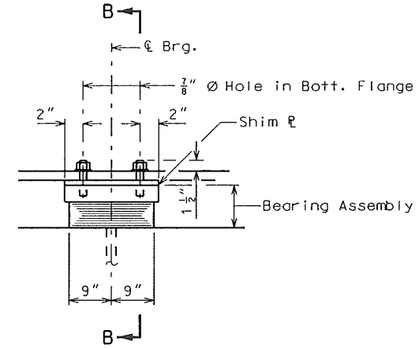

ELEVATION AT PIER 4

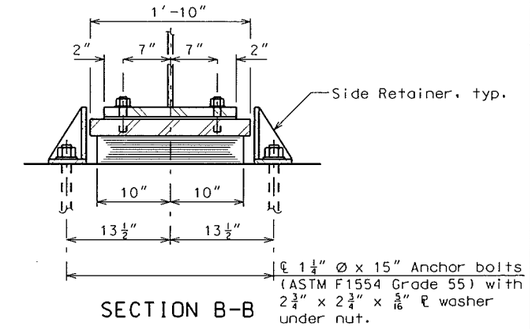

SECTION B-B

ELASTOMERIC EXP. BRG.

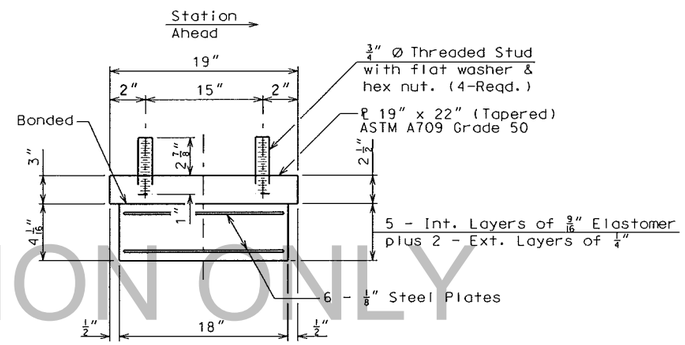

BEARING ASSEMBLY

Note:
Shim plates shall not be placed under Bearing Assembly.

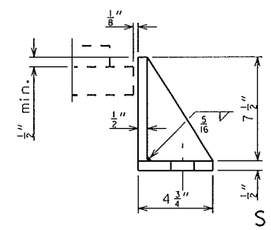

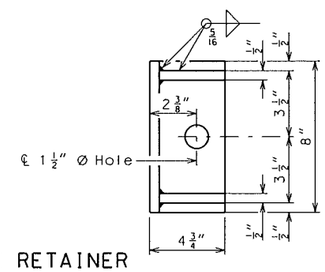

SIDE RETAINER

Equivalent rolled angle with stiffeners will be allowed in lieu of welded plates.

LAMINATED NEOPRENE BEARING ASSEMBLY DETAILS
PIERS 2 AND 4

Detailed Nov 2015
Checked Nov 2015

Note: This drawing is not to scale. Follow dimensions.

Sheet No. 29 of 73

FOR INFORMATION ONLY

LICENSED STRUCTURAL ENGINEER
STEPHEN E. ALSSURY
081-5231
STATE OF ILLINOIS
EXPIRES 11-30-16

DATE	12/1/2015
DATE PREPARED	
ROUTE	I-64
STATE	IL
DISTRICT	STL
SHEET NO.	29
COUNTY	ST. CLAIR
JOB NO.	J6I2377C/J6I2377D
CONTRACT ID.	–
PROJECT NO.	–
BRIDGE NO.	082-0005

DATE	DESCRIPTION

MISSOURI HIGHWAYS AND TRANSPORTATION COMMISSION
105 WEST CAPITOL
JEFFERSON CITY, MO 65102
1-888-ASK-MODOT (1-888-275-6636)

ABNA
4140 Lindell Boulevard
St. Louis, MO 63104
314-454-0222
Certificate of Authority: 001507

REV.