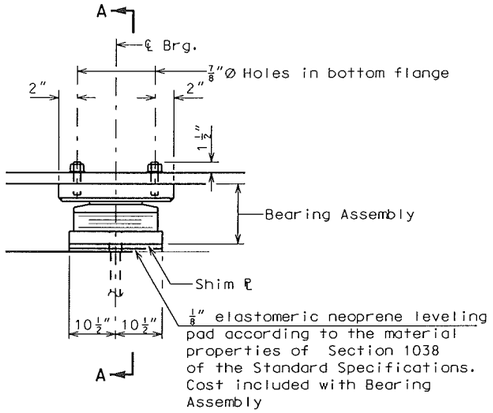

ELEVATION AT PIER 1

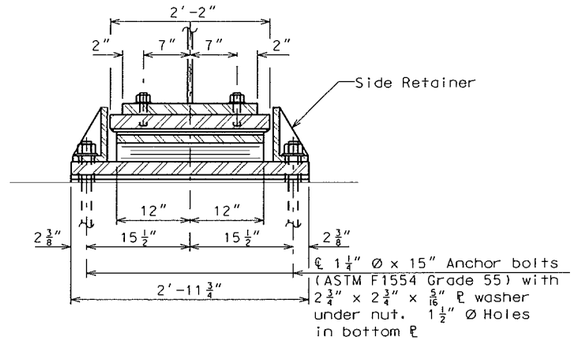

SECTION A-A

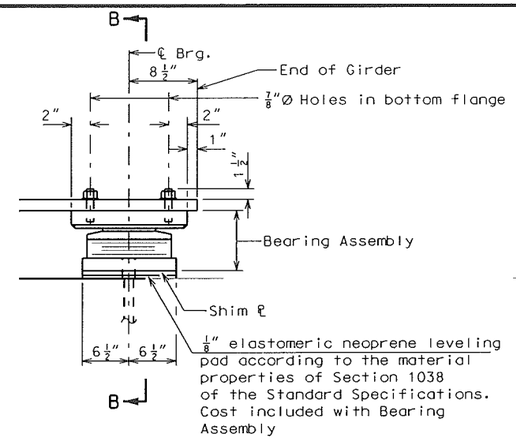

ELEVATION AT PIER 5

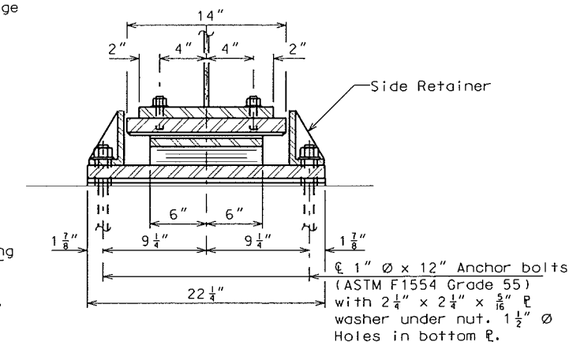

SECTION B-B

ELASTOMERIC EXP. BRG.

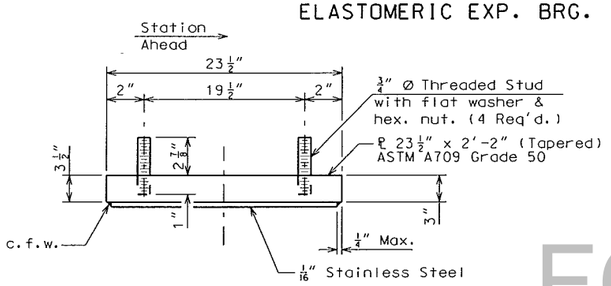

TOP BEARING ASSEMBLY

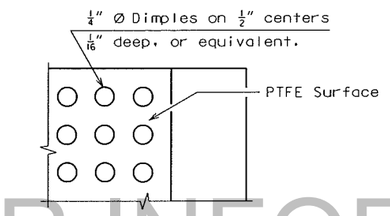

PLAN-PTFE SURFACE

ELASTOMERIC EXP. BRG.

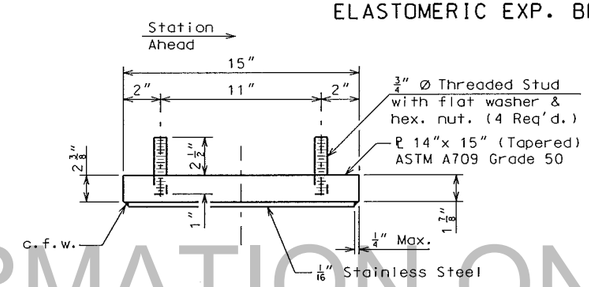

TOP BEARING ASSEMBLY

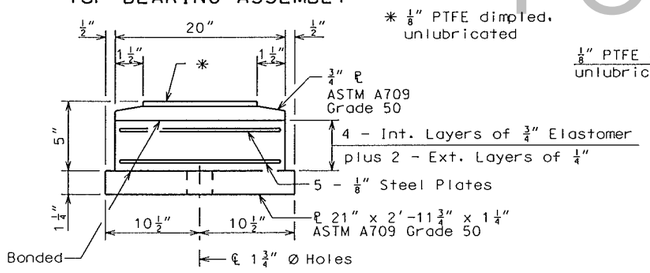

* 1/8" PTFE dimpled, unlubricated

BOTTOM BEARING ASSEMBLY

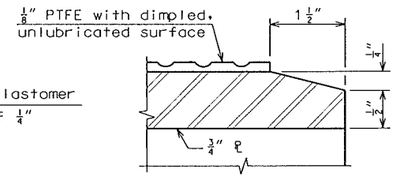

SECTION THRU PTFE

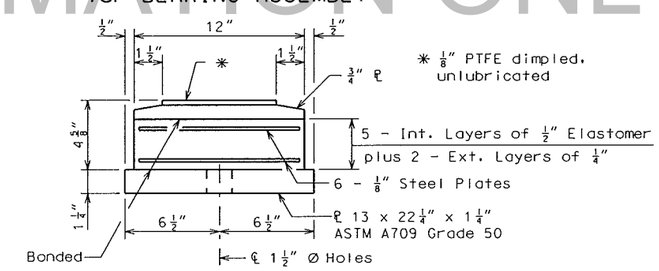

* 1/8" PTFE dimpled, unlubricated

BOTTOM BEARING ASSEMBLY

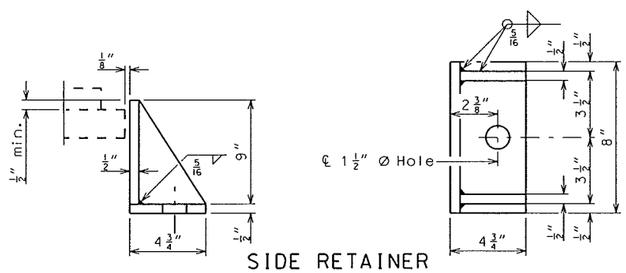

SIDE RETAINER

Equivalent rolled angle with stiffeners will be allowed in lieu of welded plates.

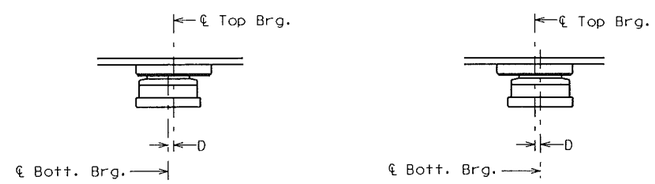

BELOW 50°F.
(Move bott. brg. away from fixed brg.)

ABOVE 50°F.
(Move bott. brg. toward fixed brg.)

SETTING ANCHOR BOLTS AT EXP. BRG.

D=1/8" per each 100' of expansion for every 15° temp. change from the normal temp. of 50°F.

Notes:

Anchor bolts shall be ASTM F1554 all-thread (or an Engineer approved alternate material) of the grade(s) and diameter(s) specified. The corresponding specifiedgrade of AASHTO M314 anchor bolts may be used in lieu of ASTM F1554.

Anchor bolts at fixed bearings may be either cast in place or installed in holes drilled after the supported member is in place.

Anchor bolts for Type N bearings shall be placed in holes drilled in the concrete through holes in the bottom bearing plate after members are in place. Side retainers shall be placed after bolts are installed.

Drilled and set anchor bolts shall be installed according to the Standard Specifications.

Side retainers and other steel members required for the elastomeric bearing assembly shall be included in the cost of Type N bearings.

The 1/8" PTFE sheet shall be bonded directly to the top steel plate with a two-component, medium viscosity epoxy resin, conforming to the requirements of the Federal Specification MMM-A-134, Type I. The bond agent shall be applied on the full area of the contact surfaces.

Bonding of 1/8" PTFE sheet during vulcanizing process will be permitted provided the process and method of adjusting assembly height is approved by the Engineer.

Neoprene Elastomeric Pads shall be 60 Durometer.

TYPE N PTFE BEARING DETAILS
PIERS 1 AND 5

Detailed Nov 2015
Checked Nov 2015

Note: This drawing is not to scale. Follow dimensions.

FOR INFORMATION ONLY

LICENSED STRUCTURAL ENGINEER
STEPHEN E. ALSBURY
081-0281
STATE OF ILLINOIS
EXPIRES 11-30-16

DATE	12/1/2015
DATE PREPARED	
ROUTE	I-64
STATE	IL
DISTRICT	STL
SHEET NO.	31
COUNTY	ST. CLAIR
JOB NO.	J6123770/J6123770
CONTRACT ID.	–
PROJECT NO.	–
BRIDGE NO.	082-0005

DESCRIPTION

DATE

MISSOURI HIGHWAYS AND TRANSPORTATION COMMISSION
105 WEST CAPITOL
JEFFERSON CITY, MO 65102
1-888-ASK-MODOT (1-888-275-6636)

ABNA
4140 Lindell Boulevard
St. Louis, MO 63104
314-454-0222
Certificate of Authority: 001507

REV.