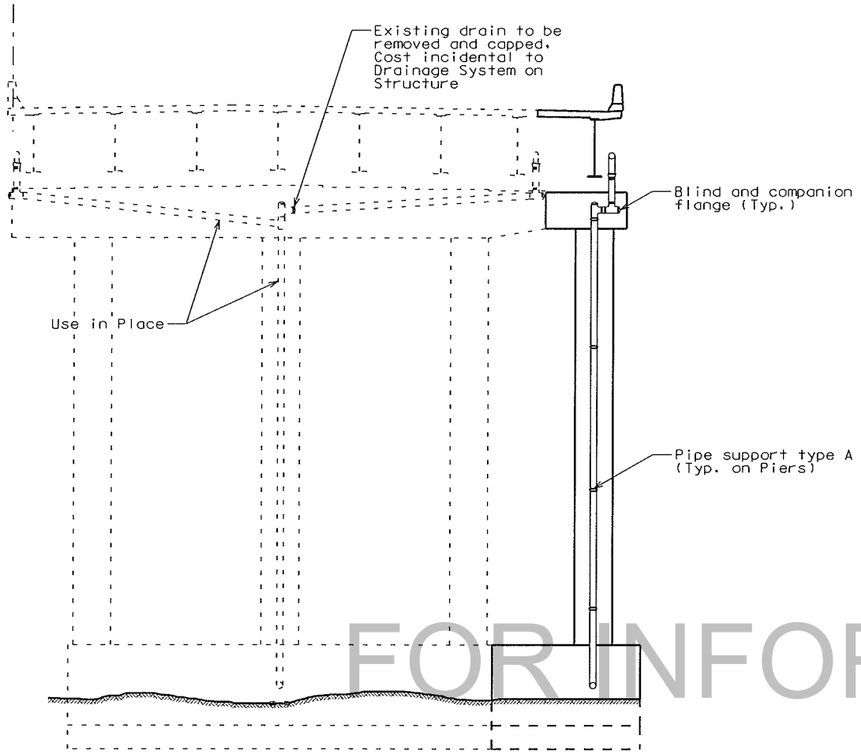

TYPICAL DRAINAGE COLLECTION SYSTEM AND DOWNSPOUTS

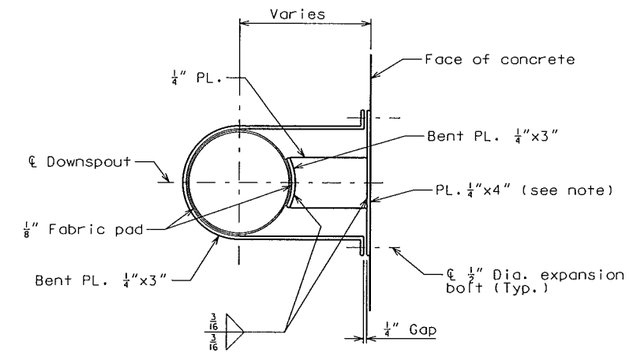

PIPE SUPPORT TYPE A

Note: Bend plate as required for attachment to column.

Shop drawings will not be required for the slab drains and the bracket assembly.

FOR INFORMATION ONLY

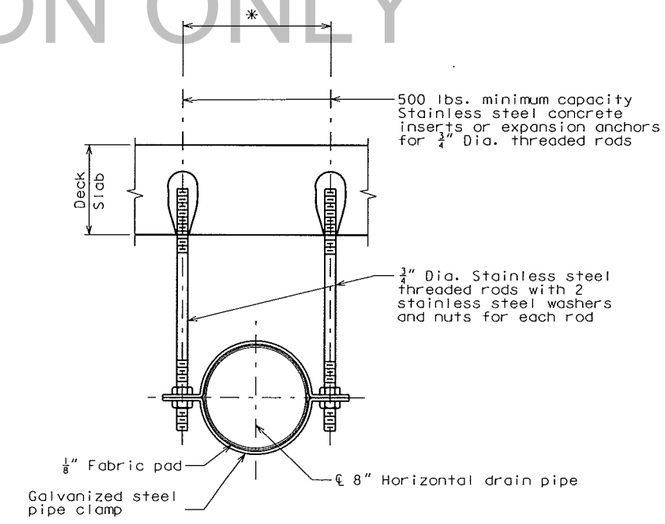

PIPE SUPPORT TYPE B

* Dimension as required by pipe clamp

Shop drawings will not be required for the slab drains and the bracket assembly.

DRAINAGE COLLECTION DETAILS

Detailed Nov 2015
Checked Nov 2015

Note: This drawing is not to scale. Follow dimensions.

LICENSED STRUCTURAL ENGINEER
STEPHEN E. ALSBURY
081-5281
STATE OF ILLINOIS
EXPIRES 11-30-16

DATE	12/1/2015
DATE PREPARED	
ROUTE	I-64
STATE	IL
DISTRICT	STL
SHEET NO.	48
COUNTY	ST. CLAIR
JOB NO.	J6I2377C/J6I2377D
CONTRACT ID.	–
PROJECT NO.	–
BRIDGE NO.	082-0005

DESCRIPTION

DATE

MISSOURI HIGHWAYS AND TRANSPORTATION COMMISSION
105 WEST CAPITOL
JEFFERSON CITY, MO 65102
1-888-ASK-MODOT (1-888-275-6636)

ABNA
4140 Lindell Boulevard
St. Louis, MO 63104
314-454-0222
Certificate of Authority: 001507

REV.