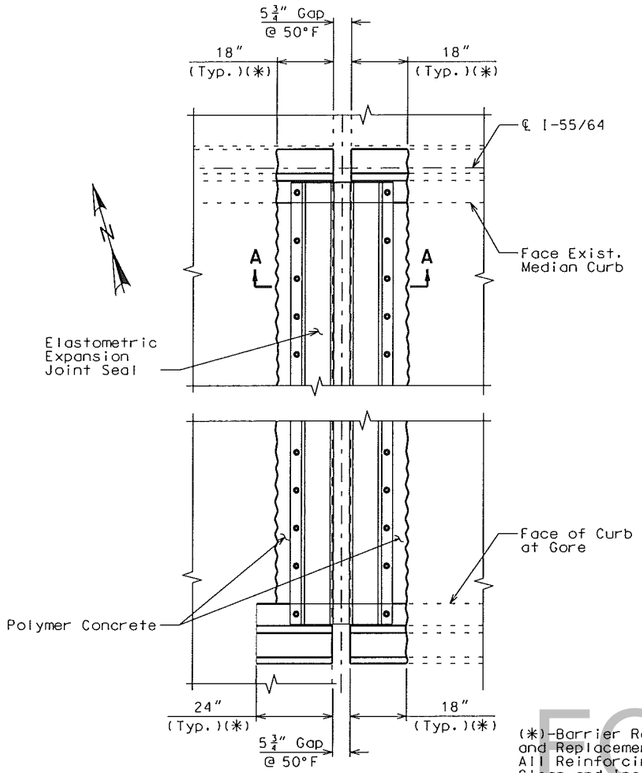

PART PLAN

(*)-Barrier Removal and Replacement Limits. All Reinforcing to Remain, Clean and Incorporate into New Construction.

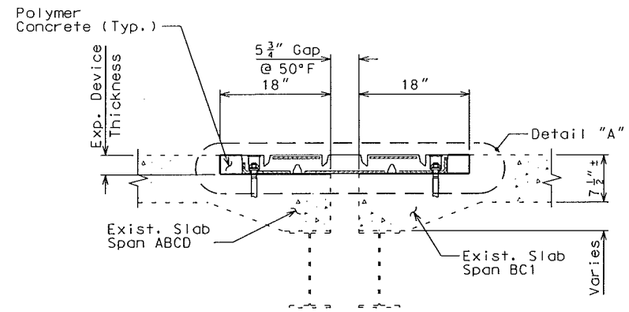

SECTION A-A

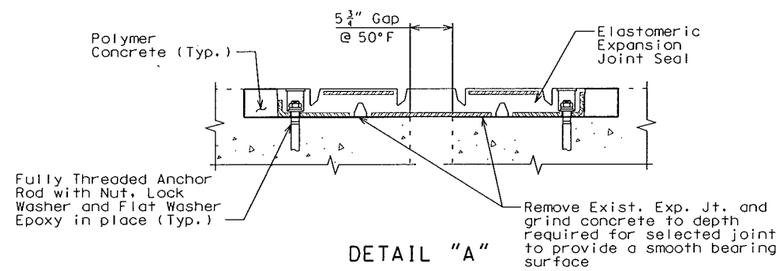

DETAIL "A"

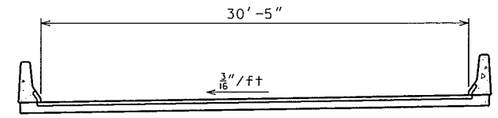

SECTION THRU JOINT

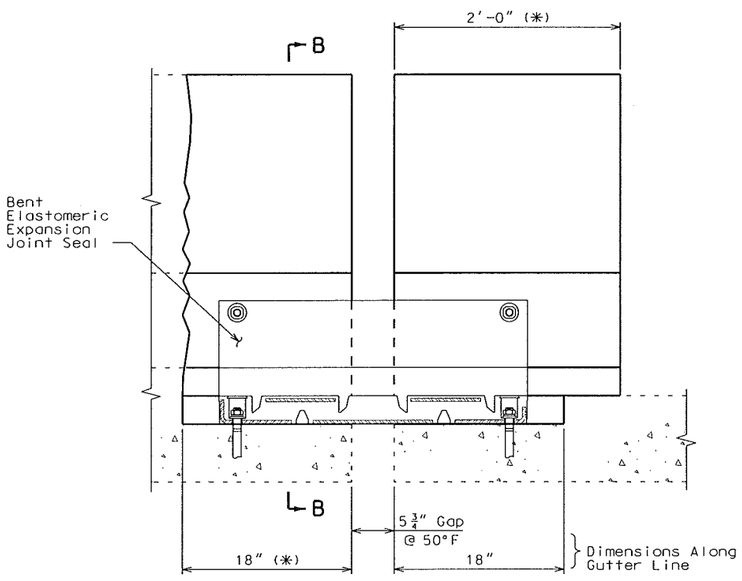

PART ELEVATION
(South Barrier shown, Median Barrier similar)

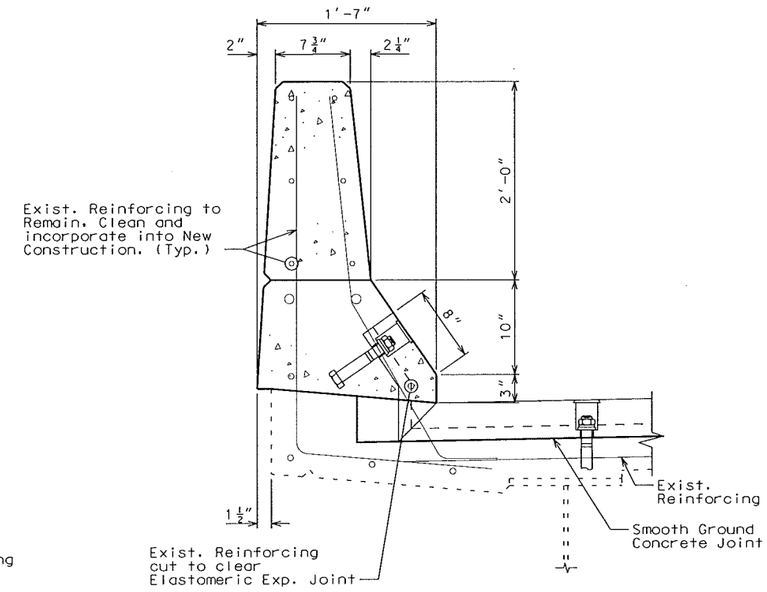

SECTION B-B

ROADWAY C EXPANSION DEVICE AT IL-PIER BC1

Notes:

Structural steel for the expansion joint system shall be ASTM A709 Grade 50 steel.

Plan dimensions are based on installation at 50°F. The expansion gap and other dimensions shall be increased or decreased 3/8" for each 10° fall or rise in temperature at installation.

Contractor shall verify all dimensions in the field before ordering material. Contractor shall notify the Engineer of any differernces in the existing gap dimension prior to ordering materials.

Longitudinal reinforcing steel shall be cut so that ends shall not be more than ±1" from vertical face of the elastomeric expansion joint system.

Provide an Elastomeric Expansion Device that provides 2.89" expansion and 3.31" contraction measured from 50°F (6.20" total movement). Watson Bowman Wabo Trans Flex Joint 650 or approved equal.

Concrete shall be forced around elastomeric expansion joint system. Proper consolidation of the concrete shall be achieved by localized internal vibration.

Polymer concrete shall be in accordance with Sec 623.

Concrete in Barrier Curbs shall be Class B-1.

The contractor shall use one of the qualified resin anchor systems in accordance with Sec 1039.

The minimum embedment depth in concrete with f'c = 4,000 psi for the resin anchor system shall be that required to meet the minimum ultimate pullout strength in accordance with Sec 1039.

The cost of all labor, material and equipment to place the elastomeric expansion joint complete in place including barrier replacement, polymer concrete, resin anchors, expansion joint assembly and all other items required to complete the construction will be considered completely covered by the contract unit price for "Steel Reinforced Elastomeric Expansion Joint System".

The cost of all labor and equipment to remove the existing joint and the adjacent concrete and barrier to the limits shown will be considered completely covered by the contract unit price for "Removal of Existing Expansion Joint Seal or Sealant".

FOR INFORMATION ONLY

LICENSED STRUCTURAL ENGINEER
STEPHEN E. ALSBURY
081-0281
STATE OF ILLINOIS
EXPIRES 11-30-16

DATE	12/1/2015
DATE PREPARED	
ROUTE	I-64
STATE	IL
DISTRICT	STL
SHEET NO.	44
COUNTY	ST. CLAIR
JOB NO.	J6I2377C/J6I2377D
CONTRACT ID.	–
PROJECT NO.	–
BRIDGE NO.	082-0005

DESCRIPTION | DATE

MISSOURI HIGHWAYS AND TRANSPORTATION COMMISSION
105 WEST CAPITOL
JEFFERSON CITY, MO 65102
1-888-ASK-MODOT (1-888-275-6636)

ABNA
4140 Lindell Boulevard
St. Louis, MO 63104
314-454-0222
Certificate of Authority: 001507

REV.

Detailed Nov 2015
Checked Nov 2015

Note: This drawing is not to scale. Follow dimensions.