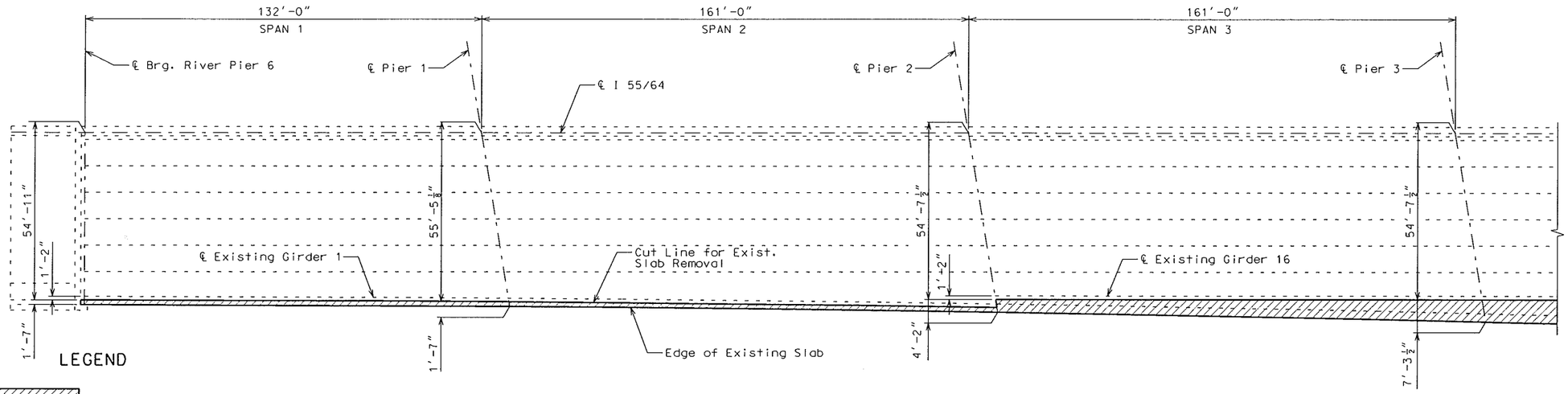

DEMOLTION PLAN

LEGEND

Indicates Limits of Existing Slab Removal

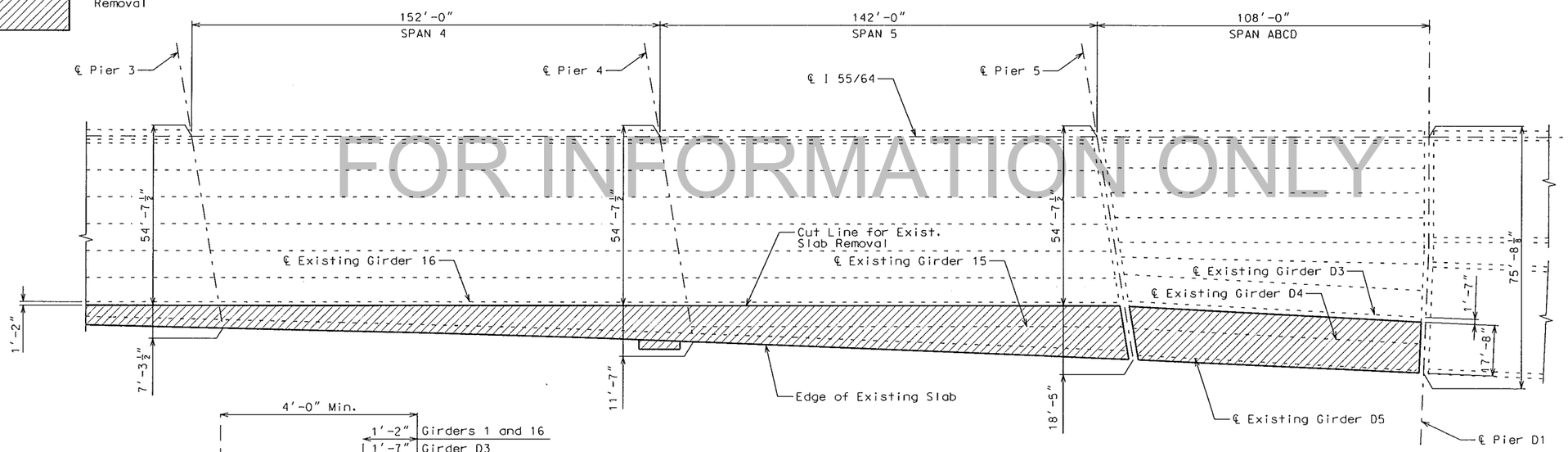

FOR INFORMATION ONLY

DEMOLTION PLAN

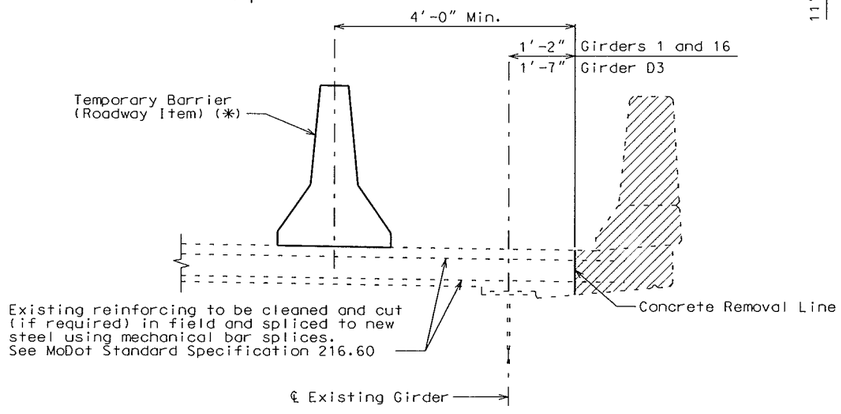

TYPICAL SECTION AT SLAB CUT LINE

SLAB REMOVAL

(*) For Staging Plans and Details see Bridge A150011 and roadway plans.

Detailed Nov 2015
Checked Nov 2015

Note: This drawing is not to scale. Follow dimensions.

LICENSED STRUCTURAL ENGINEER STEPHEN E. ALSBURY 081-5281 STATE OF ILLINOIS
EXPIRES 11-30-16

DATE	12/1/2015
DATE PREPARED	
ROUTE	I-64
STATE	IL
DISTRICT	STL
SHEET NO.	5
COUNTY	ST. CLAIR
JOB NO.	J6I2377C/J6I2377D
CONTRACT ID.	–
PROJECT NO.	–
BRIDGE NO.	082-0005

DESCRIPTION

DATE

MISSOURI HIGHWAYS AND TRANSPORTATION COMMISSION
105 WEST CAPITOL
JEFFERSON CITY, MO 65102
1-888-ASK-MODOT (1-888-275-6636)

ABNA
4140 Lindell Boulevard
St. Louis, MO 63104
314-454-0222
Certificate of Authority: 001507

REV.

c:\pwworking\oma\d1143615\B_0820005_005.dgn 8:41:38 AM 12/1/2015