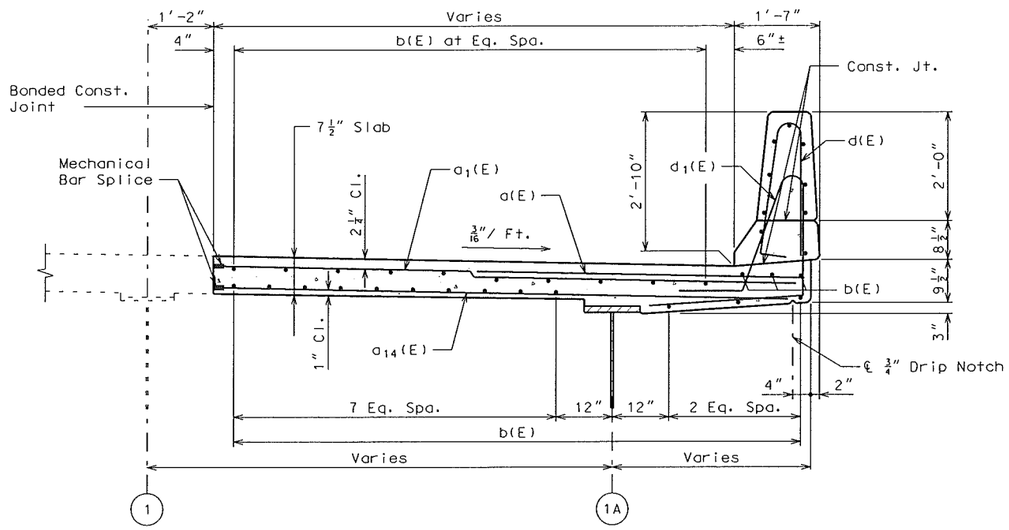

SECTION A-A

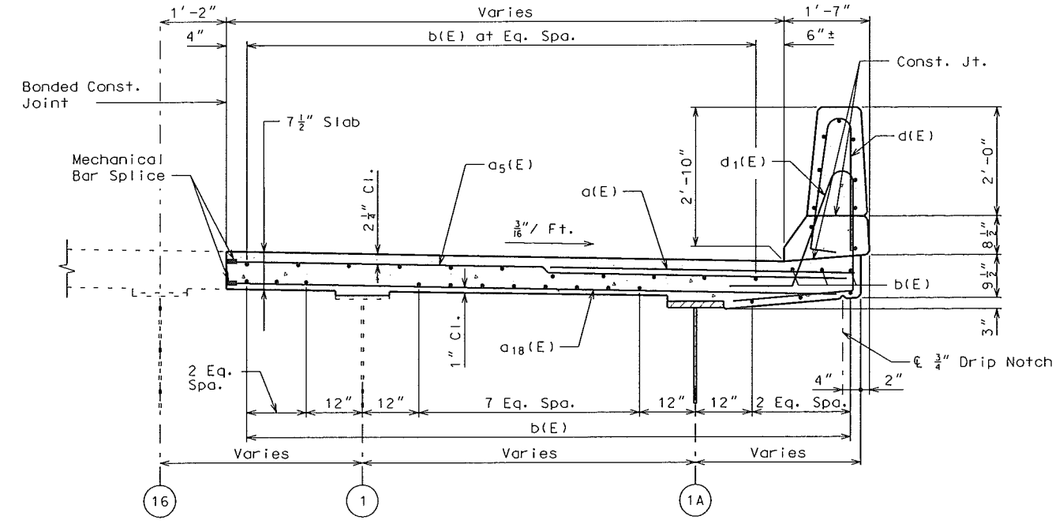

SECTION C-C

FOR INFORMATION ONLY

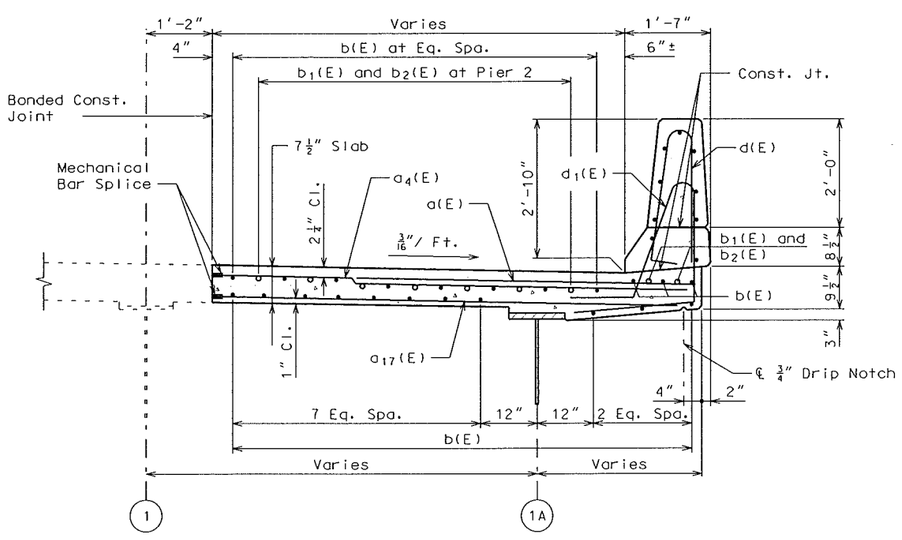

SECTION B-B

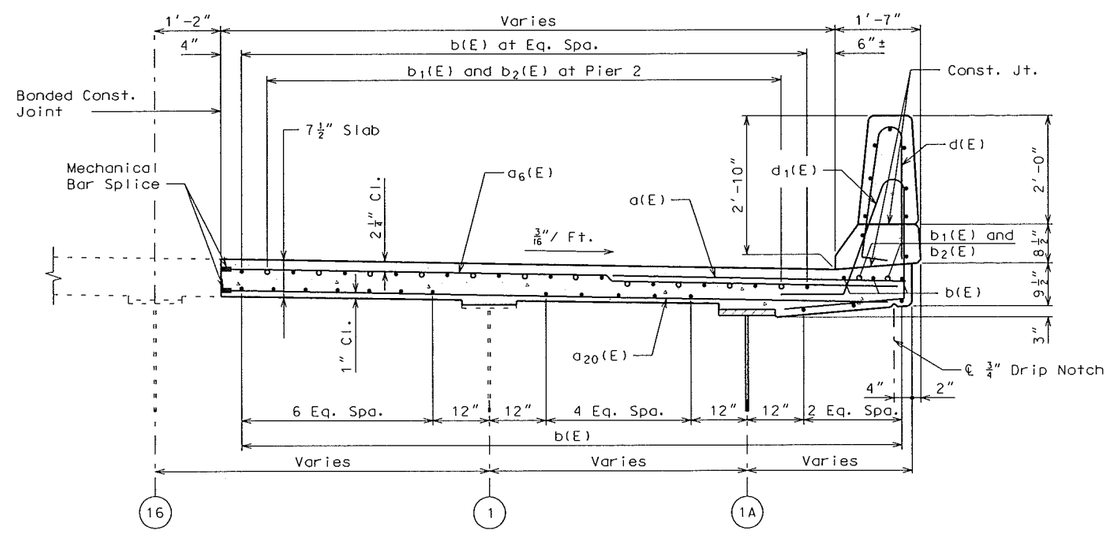

SECTION D-D

TYPICAL SLAB SECTIONS

Detailed Nov 2015
Checked Nov 2015

Note: This drawing is not to scale. Follow dimensions.

LICENSED STRUCTURAL ENGINEER STEPHEN E. ALSBURY 081-5083 STATE OF ILLINOIS
EXPIRES 11-30-16

DATE	12/1/2015
DATE PREPARED	
ROUTE	I-64
STATE	IL
DISTRICT	STL
SHEET NO.	38
COUNTY	ST. CLAIR
JOB NO.	J6I2377C/J6I2377D
CONTRACT ID.	–
PROJECT NO.	–
BRIDGE NO.	082-0005

DESCRIPTION

DATE

MISSOURI HIGHWAYS AND TRANSPORTATION COMMISSION
105 WEST CAPITOL
JEFFERSON CITY, MO 65102
1-888-ASK-MODOT (1-888-275-6636)

ABNA
4140 Lindell Boulevard
St. Louis, MO 63104
314-454-0222
Certificate of Authority: 001507

REV.