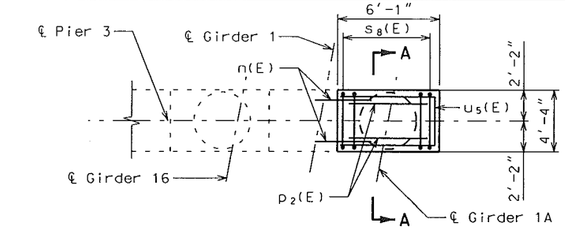

TOP PLAN

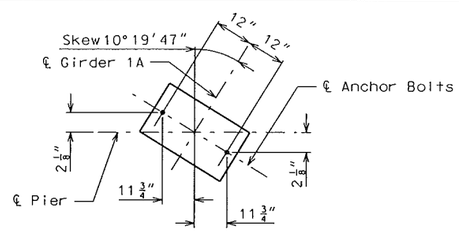

ANCHOR BOLT DETAIL

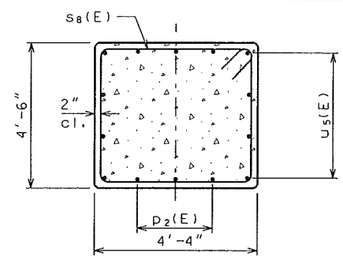

SECTION A-A

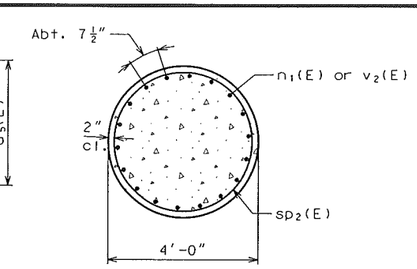

SECTION B-B

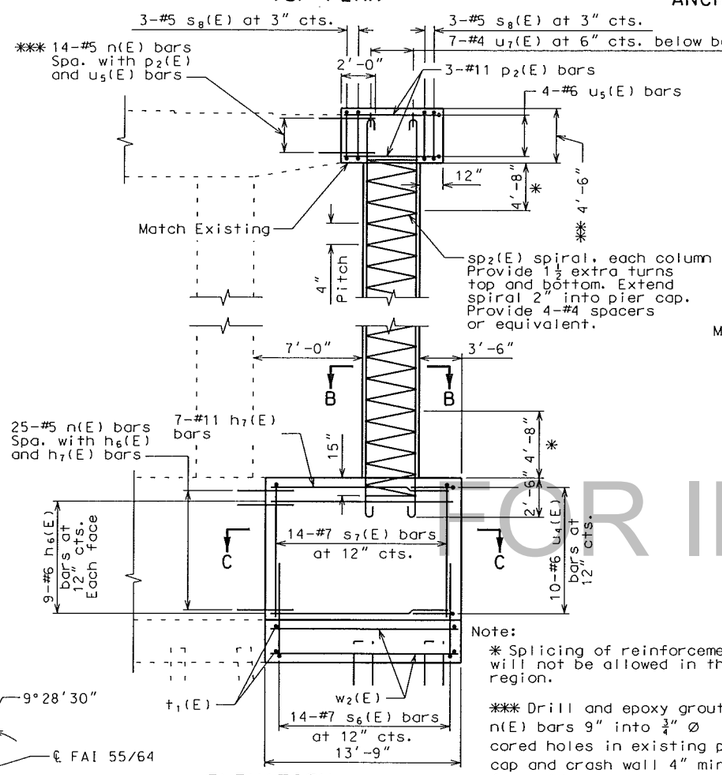

ELEVATION
(Looking East)

Note:
* Splicing of reinforcement will not be allowed in this region.

*** Drill and epoxy grout n(E) bars 9" into 3/4" Ø cored holes in existing pier cap and crash wall 4" min. from sides.

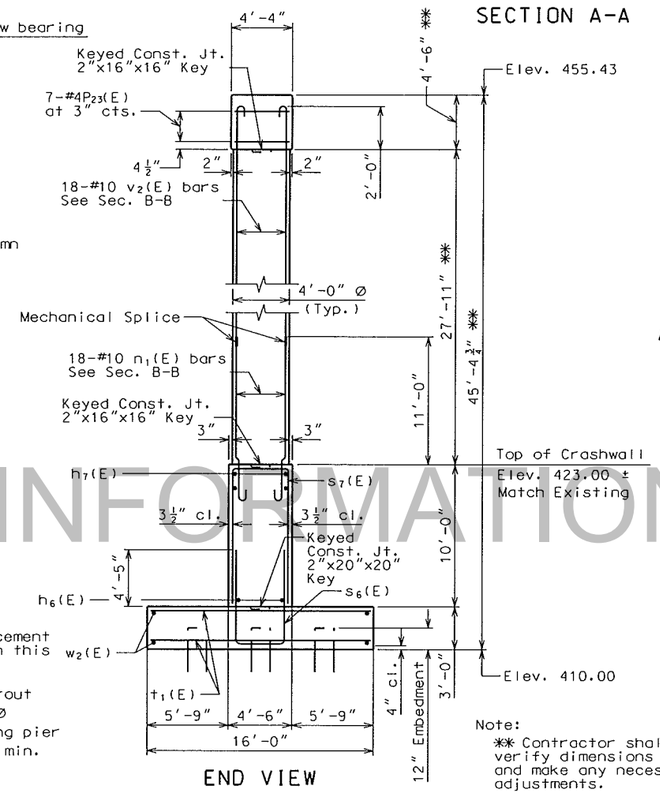

END VIEW

Note:
** Contractor shall field verify dimensions shown and make any necessary adjustments.

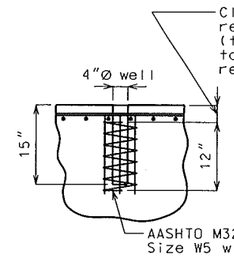

DETAIL OF
ANCHOR BOLT WELLS

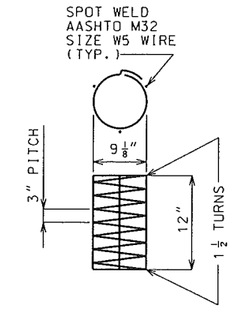

DETAIL OF
SPIRAL REINFORCEMENT

NOTES:

See Sheet No. 50 for bill of reinforcing steel for Pier 3.

Reinforcing steel shall be shifted to clear anchor bolt wells by at least 1/2".

Anchor bolt wells shall not be formed with galvanized corrugated steel pipe.

The contractor shall use a mechanical bar splice for n & v bars in column. The total bar lengths for bars indicated in the bill of reinforcing steel are determined based on the end of the bars being located flush to the face of the construction joint. No additional payment will be made for any additional bar lengths required for the mechanical bar splices. Mechanical bar splices shall be in accordance with Sec 706.

At the contractor's option, the hooks of V-Bars embedded in the beam cap may be oriented inward or outward for Seismic Category A. Bending the hook outward, away from the column core, is not allowed for Seismic Category B, C, or D.

All reinforcement in cast-in-place piling at intermediate bents is included in the substructure quantities for intermediate bents.

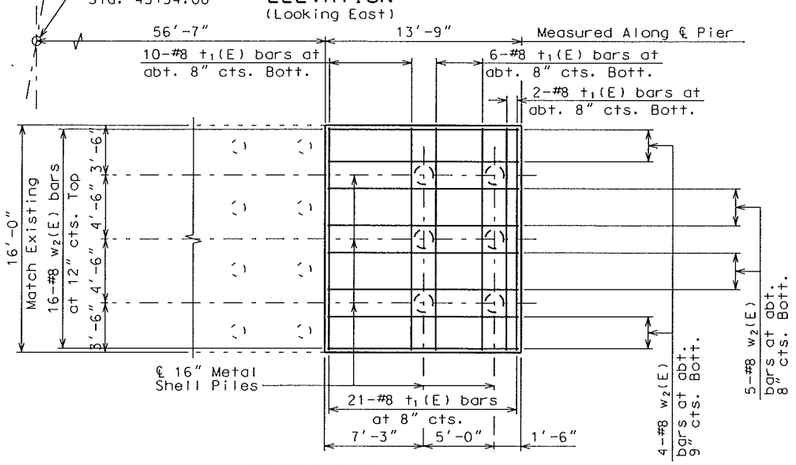

FOOTING PLAN

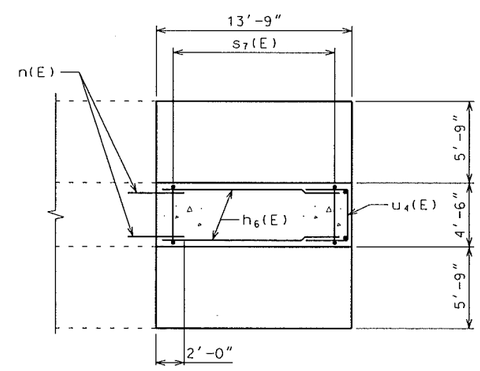

SECTION C-C

SUBSTRUCTURE QUANTITY TABLE FOR PIER 3		
Item		Quantity
Class 1 Excavation	cu. yard	70
Cast-in-Place Concrete Piles (16 in.)	linear foot	270
Class B-1 Concrete (Substructure)	cu. yard	64.7
Reinforcing Steel (Epoxy Coated)	pound	10,650
Mechanical Bar Splice	each	18

Notes: These quantities are included in the estimated quantities table on Sheet No. 2.

FOR INFORMATION ONLY

Detailed Nov 2015
Checked Nov 2015

Note: This drawing is not to scale. Follow dimensions.

PIER 3 DETAILS

LICENSED STRUCTURAL ENGINEER STEPHEN E. ALSBURY 081-0281 STATE OF ILLINOIS
EXPIRES 11-30-16

DATE	
12/1/2015	
DATE PREPARED	
ROUTE I-64	STATE IL
DISTRICT STL	SHEET NO. 8
COUNTY ST. CLAIR	
JOB NO. J6I2377C/J6I2377D	
CONTRACT ID. –	
PROJECT NO. –	
BRIDGE NO. 082-0005	

DESCRIPTION

DATE

MISSOURI HIGHWAYS AND TRANSPORTATION COMMISSION
105 WEST CAPITOL
JEFFERSON CITY, MO 65102
1-888-ASK-MODOT (1-888-275-6636)

ABNA
4140 Lindell Boulevard
St. Louis, MO 63104
314-454-0222
Certificate of Authority: 001507

REV.

c:\pwworking\oma\d1143615\B_0820005_008.dgn 9:15:49 AM 12/1/2015