BENCHMARK A-4

Chiseled "□" in Concrete Foundation at North End of Pier A-4, Elevation 405.86

U.I.P., WIDEN AND REHABILITATE EXISTING (132'-161'-161'-152'-142') CONTINUOUS COMPOSITE PLATE GIRDER SPANS AND EXISTING (108') COMPOSITE SIMPLE-SPAN PLATE GIRDER

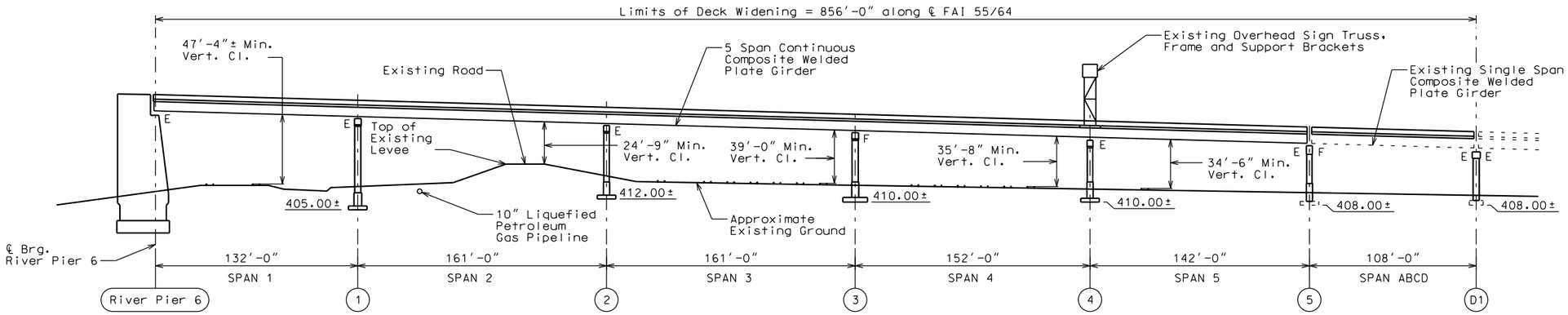

ELEVATION

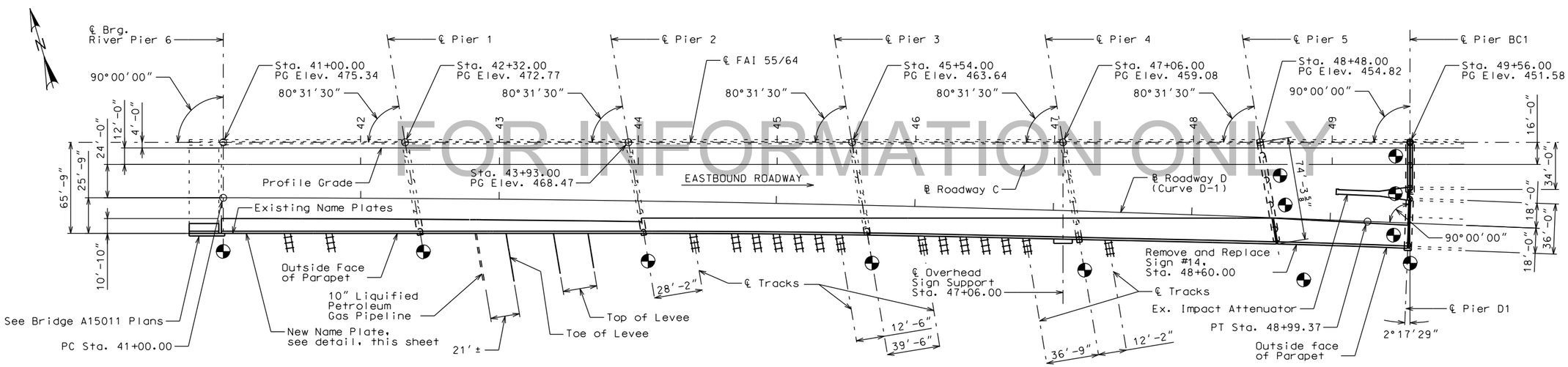

FOR INFORMATION ONLY

PLAN

DESIGN STRESSES

	EXISTING STRUCTURE	REHABILITATED STRUCTURE	NEW CONSTRUCTION
Design Specifications:	AASHTO 1961 and Applicable 1962 and 1963 Interims	AASHTO 1983 and Applicable 1984, 1985, 1986 1987 and 1988 Interims	AASHTO 2002 17th Edition
Loading:	HS20 - 44 and Alternate	HS20 - 44 and Alternate	HS20-44 and Alternate
Reinforced Concrete:			
Deck Slab	fc = 1,400 psi n = 10	f'c = 3,500 psi	f'c = 4,000 psi
Substructure	fc = 1,400 psi n = 10 Vc = 75 psi - Footings		
Reinforcing	fs = 20,000 psi	fy = 60,000 psi	fy = 60,000 psi
Structural Steel:	fs = 20,000 psi (Midspan) fs = 27,000 psi (Piers)	fy = 36,000 psi fs = 20,000 psi	fy = 50,000 psi

"⊕" Indicates location of borings.

Notice and Disclaimer Regarding Boring Log Data

The locations of all subsurface borings for this structure are shown on the plan sheet(s) for this structure. The boring data for all locations indicated, as well as any other boring logs or other factual records of subsurface data and investigations performed by the department for the design of the project, are shown on Sheets No. 55 thru 73 or will be available from the Project Contact upon written request. No greater significance or weight should be given to the boring data depicted on the plan sheets than is given to the subsurface data available from the district or elsewhere.

The Commission does not represent or warrant that any such boring data accurately depicts the conditions to be encountered in constructing this project. A contractor assumes all risks it may encounter in basing its bid prices, time or schedule of performance on the boring data depicted here or those available from the district, or on any other documentation not expressly warranted, which the contractor may obtain from the Commission.

Begin Slab Transition, Sta. 41+00.00, 65.75' Rt.
End Slab Transition, Sta. 49+54.40, 76.75' Rt.

Existing Stucture: Sta. 44+73.50 F.A.I. Rt. 55/64
Section 82-3VB
Built in 1965, Structure Number 082-0005
Superstructure: Reinforced Concrete Slab on Steel Girders
Substructure: Multi-Column Concrete Piers
Deck Slab replaced 1993
Traffic to be maintained during construction

CURVE DATA - D-1

P.I. Sta. = 44+99.74
Δ = 2°-17'-29" (Rt.)
D = 0°-17'-12"
R = 19,988.00'
T = 399.74'
L = 799.37'
E = 4.00'
S.E. = 3/16" Per Ft.
P.C. Sta. = 41+00.00
P.T. Sta. = 48+99.37

STATION 45+54
REBUILT 20__ BY
STATE OF MISSOURI
F.A.I. RT. 70 SEC.82-3VB-2
LOADING HS20 & ALT.
STR. NO. 082-0005

NAME PLATE

See IDOT Std. 515001

Note:
Existing name plate shall be cleaned and relocated next to new name plate.

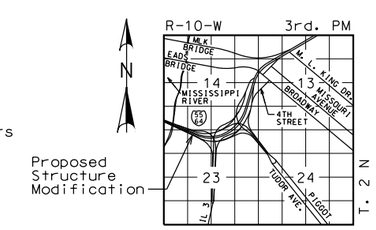

LOCATION SKETCH

GENERAL PLAN & ELEVATION
IL APPROACH TO POPLAR ST. BRIDGE
FAI 70 SEC. 82-3VB-2
ST. CLAIR COUNTY
STATION 45+54.00
STRUCTURE NO. 082-0005

STD. 706.35
STD. 617.10
STD. 617.20
STD. 702.02

Detailed Nov 2015
Checked Nov 2015

Note: This drawing is not to scale. Follow dimensions.

Sheet No. 1 of 73

LICENSED STRUCTURAL ENGINEER STEPHEN E. ALSBURY 081-5281 STATE OF ILLINOIS
EXPIRES 11-30-16

DATE	12/1/2015
DATE PREPARED	
ROUTE	I-64
STATE	IL
DISTRICT	STL
SHEET NO.	1
COUNTY	ST. CLAIR
JOB NO.	J612377C/J612377D
CONTRACT ID.	–
PROJECT NO.	–
BRIDGE NO.	082-0005

DESCRIPTION | DATE

MISSOURI HIGHWAYS AND TRANSPORTATION COMMISSION
105 WEST CAPITOL
JEFFERSON CITY, MO 65102
1-888-ASK-MODOT (1-888-275-6636)

ABNA
4140 Lindell Boulevard
St. Louis, MO 63104
314-454-0222
Certificate of Authority: 001507

REV.

C:\pwworking\oma\d1143615\B_0820005_001.dgn 11:21:10 AM 12/1/2015