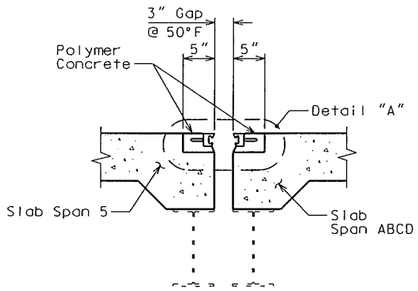

SECTION A-A

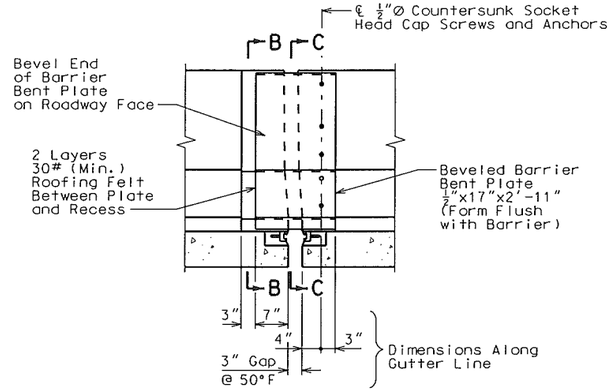

PART ELEVATION OF BARRIER

(Strip Seal Gland not shown for clarity)
(South Barrier shown, Median Barrier similar)

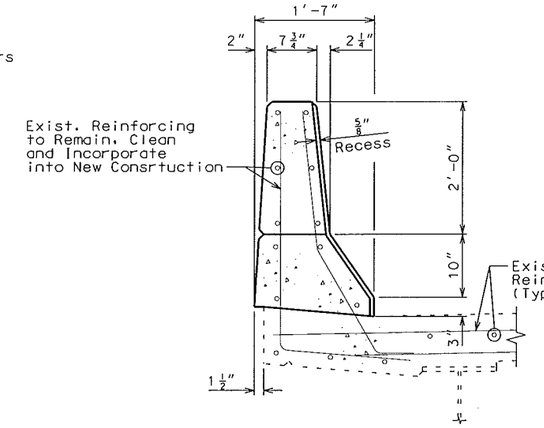

SECTION B-B

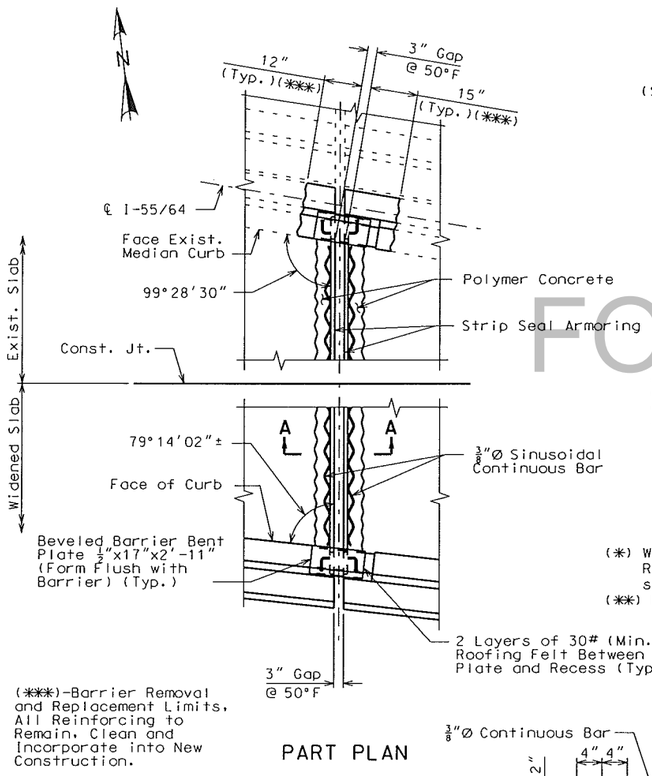

PART PLAN

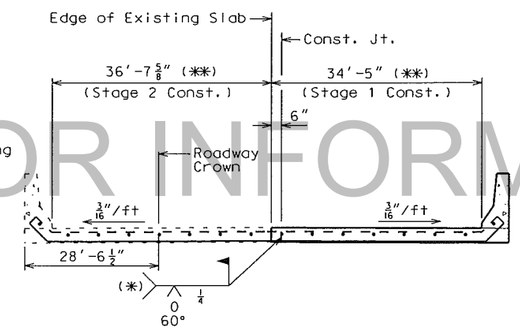

SECTION SHOWING JOINT SPLICE

(*) Weld after steel extrusion for Stage 2 is properly located. Repair galvanizing adjacent to the welds by the zinc alloy stick method. Coat the welds using the same method.
(**) Dimensions are shown along the skewed joint.

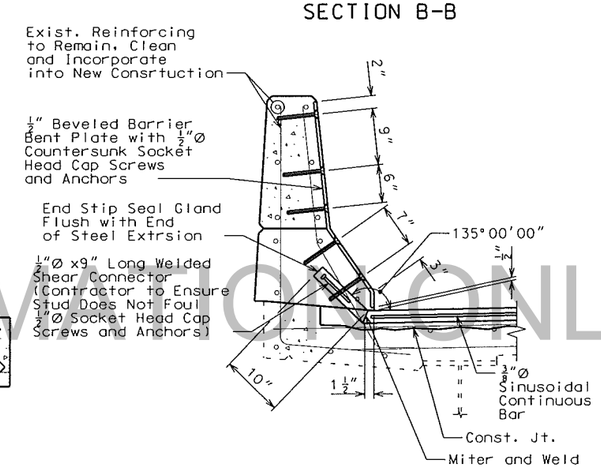

SECTION C-C

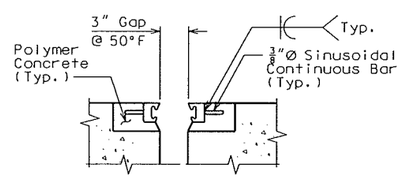

DETAIL "A"

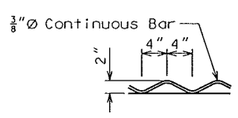

DETAIL OF SINUSOIDAL BAR

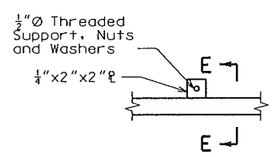

SUGGESTED METHOD OF SUPPORTING AND LEVELING ASSEMBLY

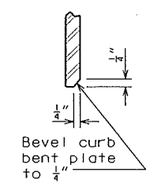

SECTION D-D

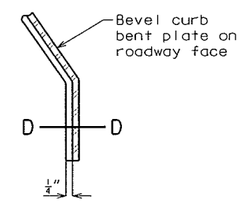

PART ELEVATION AT END OF BEVELED CURB BENT PLATE

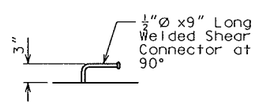

DETAIL OF SHEAR CONNECTOR

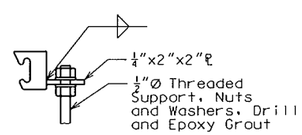

SECTION E-E

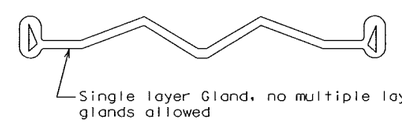

Strip seal gland size = 6"

DETAIL OF GLAND

ROADWAY CD STRIP SEAL AT IL-PIER 5

Notes:

Expansion joint system shall be fabricated in one section, except for stage construction and when the length is over 50 feet. A complete joint penetration groove welded splice shall be required. Welds shall be ground flush to provide a smooth surface. The expansion joint system shall be fabricated and installed to the crown and grade of the roadway.

The strip seal gland shall be installed in joints in one continuous piece without field splices. Factory splicing will be permitted for joints in excess of 53 feet. No gland shall be installed during Stage 1 Construction, the gland shall be installed full width of bridge after completion of Stage 2 Construction.

Structural steel for the expansion joint system shall be ASTM A709 Grade 36 except the steel armor may be ASTM A709 Grade 50W. Anchors for the expansion joint system shall be in accordance with Sec 1037. Strip seal expansion joint system shall be in accordance with Sec 717.

Structural steel for the expansion joint system and curb plate shall be coated with a minimum of two coats of inorganic zinc primer (5 mils minimum) or galvanized in accordance with ASTM A123. Anchors need not be protected from over spray.

Plan dimensions are based on installation at 50°F. The expansion gap and other dimensions shall be increased or decreased 1/4" for each 10° fall or rise in temperature at installation.

Dimensions shown were taken from existing drawings. Contractor shall verify all dimensions in the field before ordering materials. Contractor shall notify the Engineer of any differences in the existing gap dimension prior to ordering materials.

Longitudinal reinforcing steel shall be cut so that ends shall not be more than ±1" from vertical leg of the steel armor at the expansion joint system.

Concrete shall be forced under and around steel armor and anchors. Proper consolidation of the concrete shall be achieved by localized internal vibration.

Polymer Concrete shall be in accordance with Sec 623.

At the Contractors option and expense the expansion joint assembly may be spliced at the optional construction joint location shown. No additional payment will be considered for use of this splice.

Concrete in Barrier Curbs shall be Class B-1.

Curb plate anchors shall be a drilled cone expansion or a cast-in-place wing type threaded insert. The minimum ultimate pullout capacity for these anchors shall be 2700 lbs in f'c = 4000 psi concrete. Lead anchors will not be permitted. Holes in the barrier curb for anchors shall not be drilled until the concrete is at least 7 days old.

The cost of all labor, material and equipment to place the strip seal joint system complete in place including barrier replacement, polymer concrete, curb plates and anchors, expansion joint assembly and all other items required to complete the construction will be considered completely covered by the contract unit price for "Strip Seal Expansion Joint System".

The cost of all labor and equipment to remove the existing joint and the adjacent concrete and barrier to the limits shown will be considered completely covered by the contract unit price for "Removal of Existing Expansion Joint Seal or Sealant".

LICENSED STRUCTURAL ENGINEER
STEPHEN E. ALSBURY
081-5281
STATE OF ILLINOIS
EXPIRES 11-30-16

DATE	12/1/2015
DATE PREPARED	
ROUTE	I-64
STATE	IL
DISTRICT	STL
SHEET NO.	43
COUNTY	ST. CLAIR
JOB NO.	J612377C/J612377D
CONTRACT ID.	–
PROJECT NO.	–
BRIDGE NO.	082-0005

DATE	DESCRIPTION

MISSOURI HIGHWAYS AND TRANSPORTATION COMMISSION
105 WEST CAPITOL
JEFFERSON CITY, MO 65102
1-888-ASK-MODOT (1-888-275-6636)

ABNA
4140 Lindell Boulevard
St. Louis, MO 63104
314-454-0222
Certificate of Authority: 001507

REV.

Detailed Nov 2015
Checked Nov 2015

Note: This drawing is not to scale. Follow dimensions.

FOR INFORMATION ONLY

c:\pwworking\oma\d1143615\B_0820005_043.dgn 9:25:02 AM 12/1/2015