EXISTING GIRDER 1

Location	Station	Offset	Theoretical Grade Elevations	Theoretical Grade Elevations Adjusted For Dead Load Deflection
℄ Pier 2	4402.06	56.08	467.73	467.73
AC	4412.06	56.27	467.43	467.43
AD	4422.05	56.46	467.13	467.14
AE	4432.05	56.65	466.82	466.85
AF	4442.05	56.84	466.52	466.56
AG	4452.05	57.04	466.21	466.27
AH	4462.05	57.23	465.91	465.98
AI	4472.04	57.42	465.61	465.68
AJ	4482.04	57.62	465.30	465.38
AK	4492.04	57.81	465.00	465.08
AL	4502.04	58.00	464.69	464.77
AM	4512.04	58.20	464.39	464.46
AN	4522.03	58.39	464.09	464.14
AO	4532.03	58.58	463.78	463.82
AP	4542.03	58.78	463.48	463.50
AQ	4552.03	58.97	463.17	463.18
℄ Pier 3	4563.56	59.19	462.82	462.82
AR	4573.56	59.47	462.52	462.52
AS	4583.55	59.76	462.22	462.21
AT	4593.55	60.04	461.91	461.92
AU	4603.55	60.33	461.61	461.62
AV	4613.54	60.61	461.30	461.32
AW	4623.54	60.90	461.00	461.02
AX	4633.53	61.18	460.70	460.72
AY	4643.53	61.47	460.39	460.42
AZ	4653.53	61.75	460.09	460.11
BA	4663.52	62.04	459.79	459.81
BB	4673.52	62.32	459.48	459.50
BC	4683.51	62.60	459.18	459.19
BD	4693.51	62.89	458.87	458.88
BE	4703.51	63.17	458.57	458.57
℄ Pier 4	4716.26	63.54	458.18	458.18
BF	4726.26	63.92	457.88	457.88
BG	4736.25	64.31	457.58	457.59
BH	4746.24	64.70	457.27	457.30
BI	4756.23	65.09	456.97	457.01
BJ	4766.22	65.48	456.67	456.72
BK	4776.22	65.88	456.36	456.42
BL	4786.21	66.27	456.06	456.12
BM	4796.20	66.66	455.76	455.82
BN	4806.19	67.05	455.46	455.52
BO	4816.19	67.44	455.16	455.22
BP	4826.18	67.83	454.88	454.93
BQ	4836.17	68.22	454.60	454.64
BR	4846.16	68.61	454.34	454.36
℄ Brg. Pier 5	4859.16	69.11	454.00	454.00

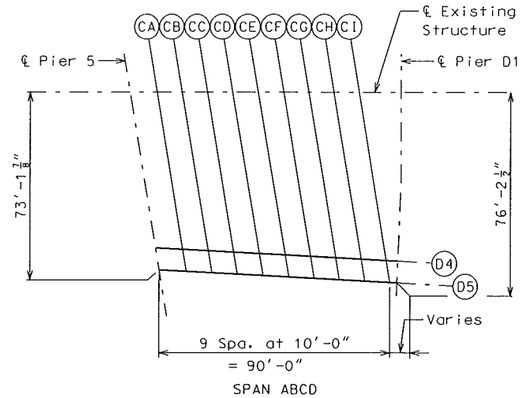

PLAN

EXISTING GIRDER D4

Location	Station	Offset	Theoretical Grade Elevations	Theoretical Grade Elevations Adjusted For Dead Load Deflection
℄ Brg. Pier 5	4859.11	67.50	454.03	454.03
CA	4869.10	61.03	453.73	453.77
CB	4879.09	61.56	453.43	453.51
CC	4889.06	62.09	453.13	453.24
CD	4899.05	62.62	452.83	452.95
CE	4909.04	63.15	452.53	452.66
CF	4919.03	63.68	452.23	452.34
CG	4929.01	64.22	451.93	452.03
CH	4938.99	64.74	451.63	451.68
CI	4948.89	65.26	451.33	451.35
℄ Brg. Pier D1	4954.07	65.55	451.18	451.18

EXISTING GIRDER D5

Location	Station	Offset	Theoretical Grade Elevations	Theoretical Grade Elevations Adjusted For Dead Load Deflection
℄ Brg. Pier 5	4860.56	69.21	453.89	453.39
CA	4870.55	69.74	453.59	453.61
CB	4880.54	70.27	453.29	453.37
CC	4890.52	70.81	452.99	453.10
CD	4900.50	71.34	452.69	452.81
CE	4910.49	71.86	452.39	452.52
CF	4920.48	72.40	452.09	452.20
CG	4930.47	72.93	451.79	452.89
CH	4940.45	73.46	451.49	451.54
℄ Brg. Pier D1	4953.73	74.17	451.10	451.10

FOR INFORMATION ONLY

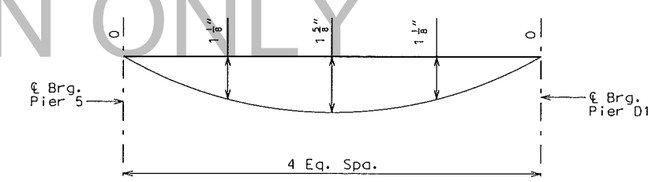

EXISTING GIRDER 15

Location	Station	Offset	Theoretical Grade Elevations	Theoretical Grade Elevations Adjusted For Dead Load Deflection
℄ Pier 4	4715.90	61.27	458.23	458.23
BF	4725.90	61.27	457.93	457.95
BG	4735.90	61.27	457.63	457.67
BH	4745.90	61.27	457.34	457.41
BI	4755.90	61.27	457.04	457.14
BJ	4765.90	61.27	456.74	456.87
BK	4775.90	61.27	456.44	456.60
BL	4785.90	61.27	456.15	456.32
BM	4795.90	61.27	455.85	456.03
BN	4805.90	61.27	455.55	455.73
BO	4815.90	61.27	455.27	455.43
BP	4825.90	61.27	454.99	455.13
BQ	4835.90	61.27	454.72	454.82
BR	4845.90	61.27	454.46	454.52
℄ Brg. Pier 5	4857.90	61.27	454.16	454.16

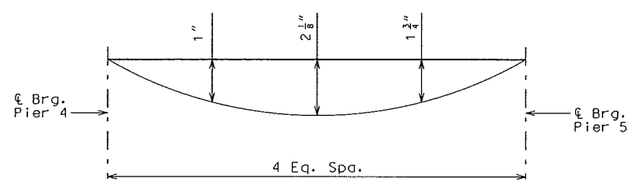

THEORETICAL BOTTOM OF SLAB ELEVATIONS

Detailed Nov 2015
Checked Nov 2015

Note: This drawing is not to scale. Follow dimensions.

LICENSED STRUCTURAL ENGINEER STEPHEN E. ALSBURY 081-5281 STATE OF ILLINOIS
EXPIRES 11-30-16

DATE
12/1/2015
DATE PREPARED

ROUTE	STATE
I-64	IL
DISTRICT	SHEET NO.
STL	34

COUNTY: ST. CLAIR
JOB NO.: J612377C/J612377D
CONTRACT ID.: –
PROJECT NO.: –
BRIDGE NO.: 082-0005

DESCRIPTION	DATE

MISSOURI HIGHWAYS AND TRANSPORTATION COMMISSION
MoDOT
105 WEST CAPITOL
JEFFERSON CITY, MO 65102
1-888-ASK-MODOT (1-888-275-6636)

ABNA
4140 Lindell Boulevard
St. Louis, MO 63104
314-454-0222
Certificate of Authority: 001507

REV.