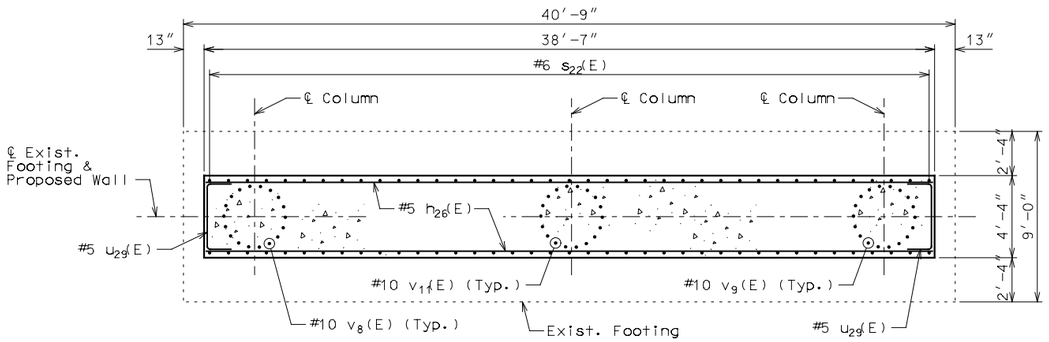

SECTION D-D

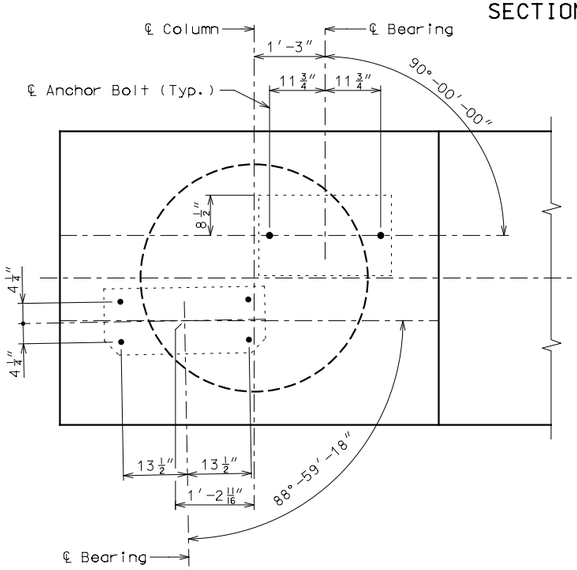

DETAIL "A"

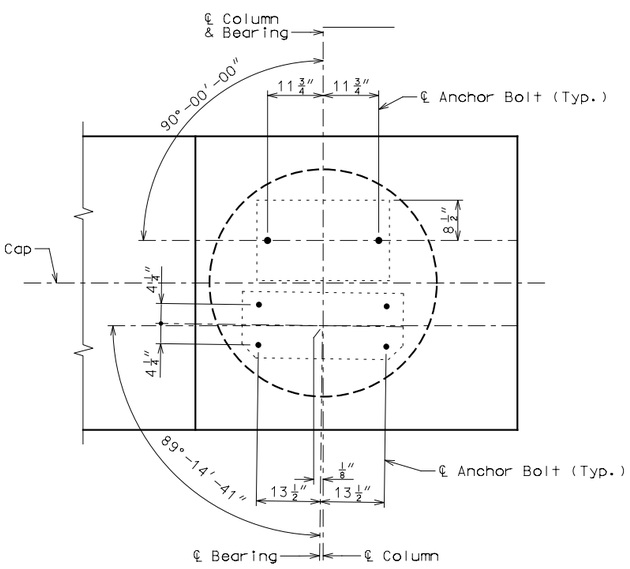

DETAIL "B"

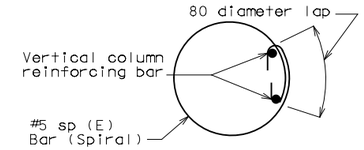

ANCHOR SPLICES IN SPIRAL AROUND VERTICAL BAR

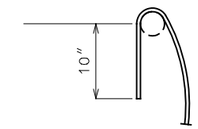

DETAILS OF 135° SEISMIC SPIRAL TIE HOOK

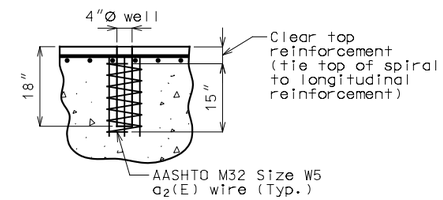

DETAIL OF ANCHOR BOLT WELLS

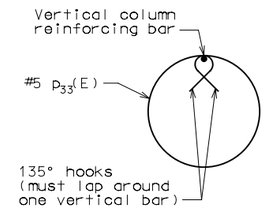

DETAIL OF SEISMIC STIRRUP BAR

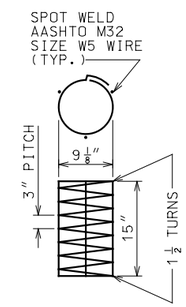

DETAIL OF SPIRAL REINFORCMENT

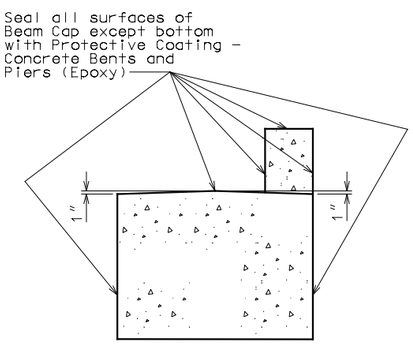

PROTECTIVE COATING

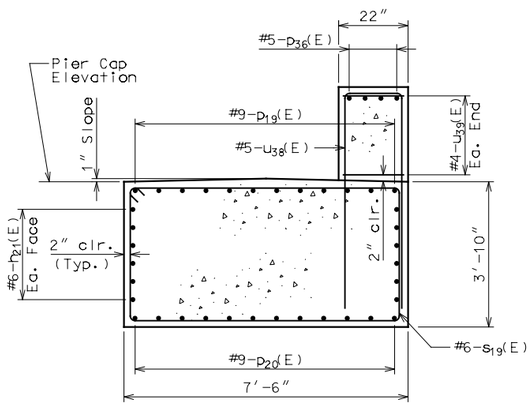

SECTION B-B

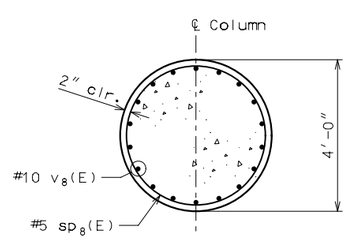

SECTION C-C

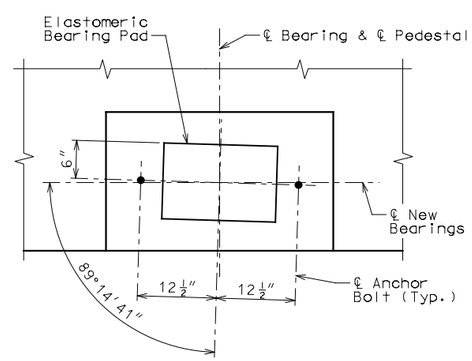

DETAIL "C"

PIER D1

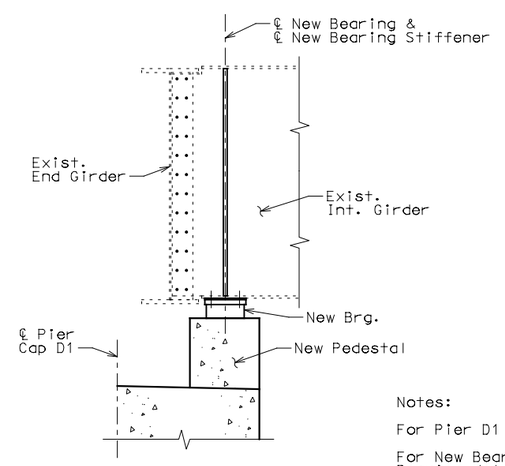

NEW BEARING SCHEMATIC

Notes:

For Pier D1 Notes, see Sheet No. 22.

For New Bearing Stiffener and New Bearing details, see Sheet No. 30.

Detailed Oct 2015
Checked Oct 2015

Note: This drawing is not to scale. Follow dimensions.

STATE OF ILLINOIS
MICHAEL B. QUIRIN
081-006070
CHICAGO, ILLINOIS
LICENSED STRUCTURAL ENGINEER

THIS SHEET HAS BEEN SIGNED, SEALED AND DATED ELECTRONICALLY

DATE PREPARED	
11/23/2015	
ROUTE	STATE
I-64	IL
DISTRICT	SHEET NO.
STL	23
COUNTY	
ST. CLAIR	
JOB NO.	
J6I2377C/J6I2377D	
CONTRACT ID.	
—	
PROJECT NO.	
—	
BRIDGE NO.	
082-0005	

DATE	DESCRIPTION

MISSOURI HIGHWAYS AND TRANSPORTATION COMMISSION
105 WEST CAPITOL
JEFFERSON CITY, MO 65102
1-888-ASK-MODOT (1-888-275-6636)

HDR Engineering, Inc.
401 S. 18th Street
Suite 300
St. Louis, MO 63103-2267
314-425-8300
Certificate of Authority: 000856