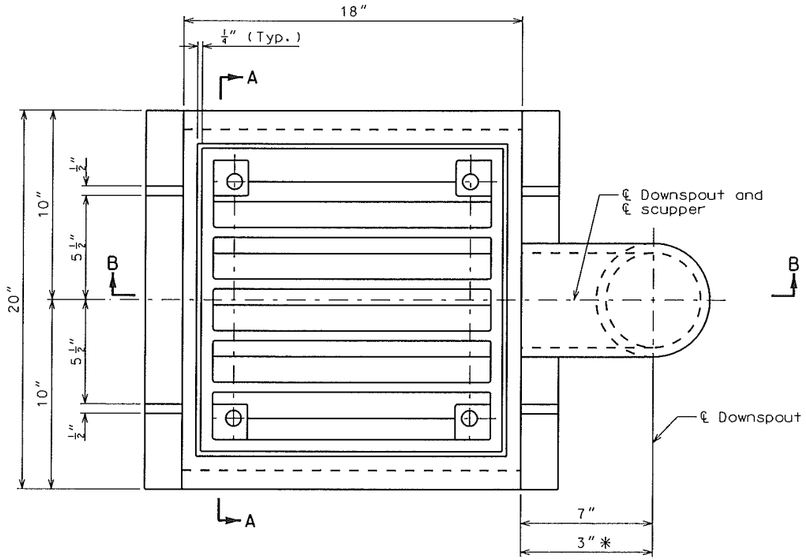

PLAN

* = Special Scupper

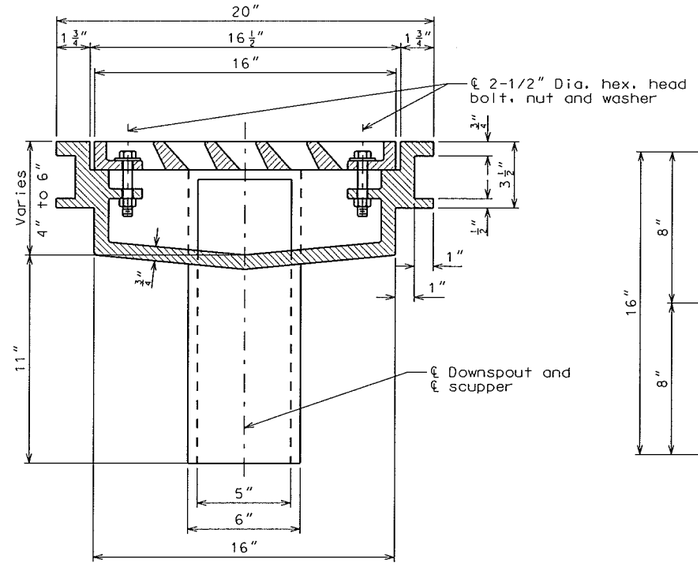

SECTION A-A

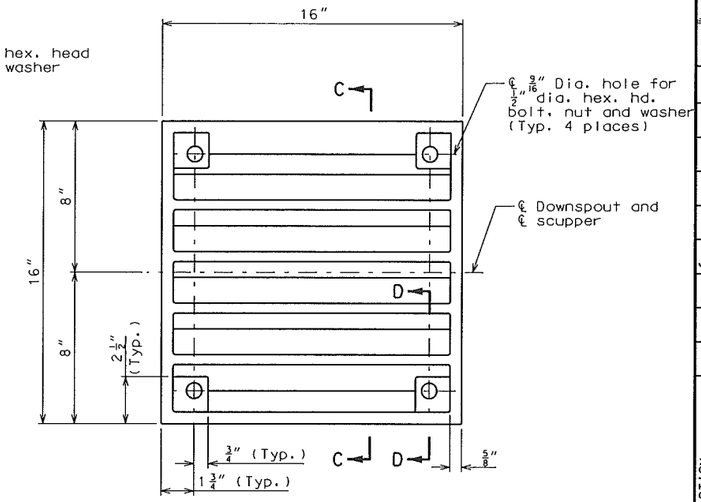

PLAN

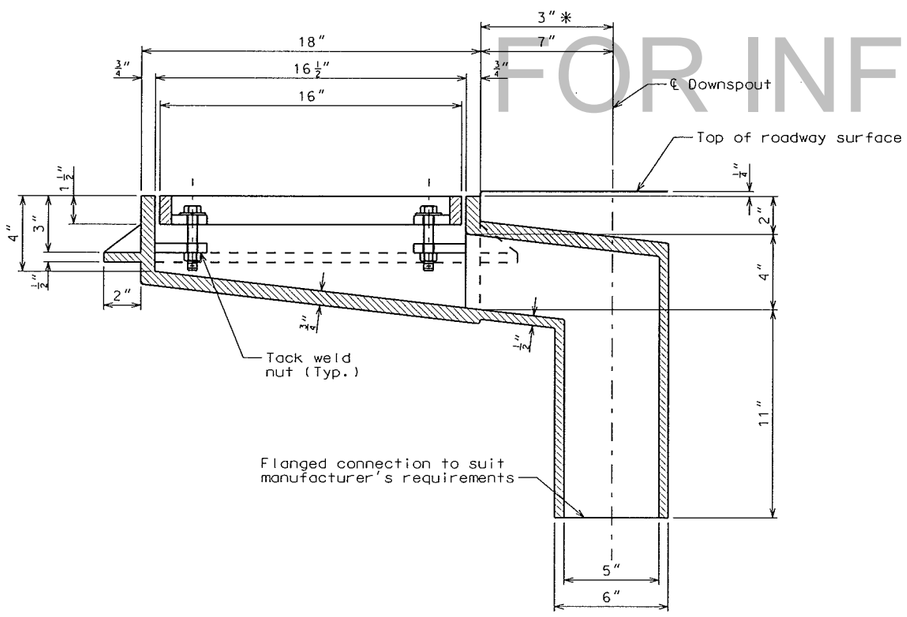

SECTION B-B

DRAINAGE SCUPPER

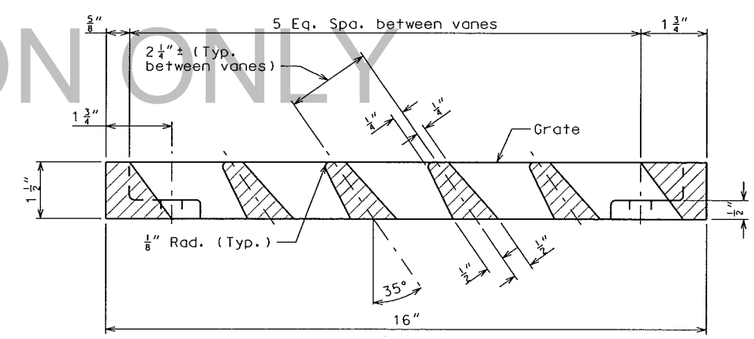

SECTION C-C

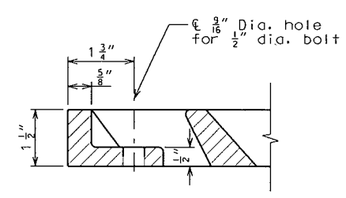

SECTION D-D

GRATE DETAILS

NOTES:

All cast iron parts shall be gray iron conforming to the requirements of AASHTO M-105, class 30.

Bolts and washers shall conform to the requirements of ASTM A307.

All bolts and washers shall be galvanized in accordance with AASHTO M-232.

As an alternate bolts and washers mat be stainless steel conforming to the requirements of ASTM A-193 type 304.

Cost of grate, frame, downspout, bolts and washers including complete installation of scupper shall be paid for at the lump sum bid price for Drainage System on Structure.

A material such as grease should be used as a treatment for the bolts anchoring the grate to the frame.

DRAINAGE SCUPPER DETAILS

FOR INFORMATION ONLY

LICENSED STRUCTURAL ENGINEER
STEPHEN E. ALSSURY
081-0081
STATE OF ILLINOIS
EXPIRES 11-30-16

DATE PREPARED	12/1/2015
ROUTE	I-64
STATE	IL
DISTRICT	STL
SHEET NO.	49
COUNTY	ST. CLAIR
JOB NO.	J612377C/J612377D
CONTRACT ID.	–
PROJECT NO.	–
BRIDGE NO.	082-0005

DESCRIPTION	DATE

MISSOURI HIGHWAYS AND TRANSPORTATION COMMISSION
MoDOT
105 WEST CAPITOL
JEFFERSON CITY, MO 65102
1-888-ASK-MODOT (1-888-275-6636)

ABNA
4140 Lindell Boulevard
St. Louis, MO 63104
314-454-0222
Certificate of Authority: 001507

Detailed Nov 2015
Checked Nov 2015

Note: This drawing is not to scale. Follow dimensions.

REV.

c:\pwworking\oma\d1143615\B_0820005_049.dgn 9:31:42 AM 12/1/2015