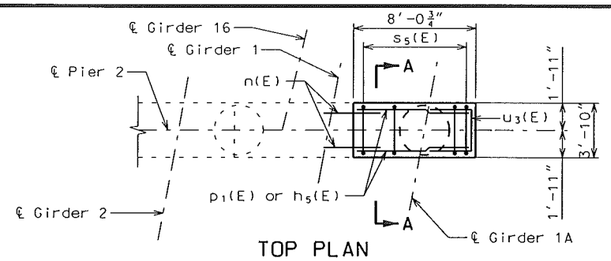

TOP PLAN

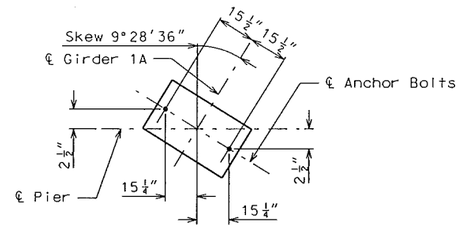

ANCHOR BOLT DETAIL

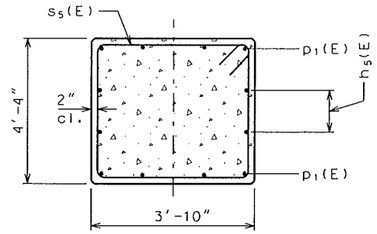

SECTION A-A

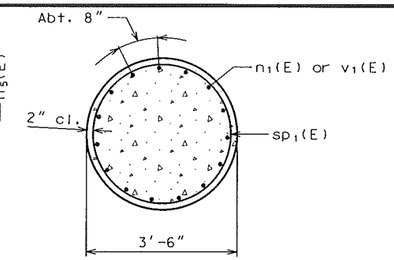

SECTION B-B

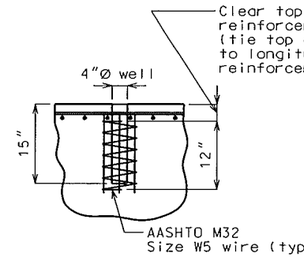

DETAIL OF ANCHOR BOLT WELLS

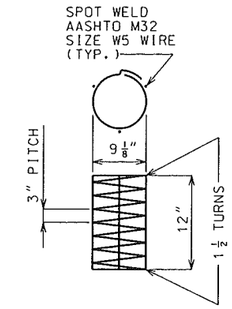

DETAIL OF SPIRAL REINFORCEMENT

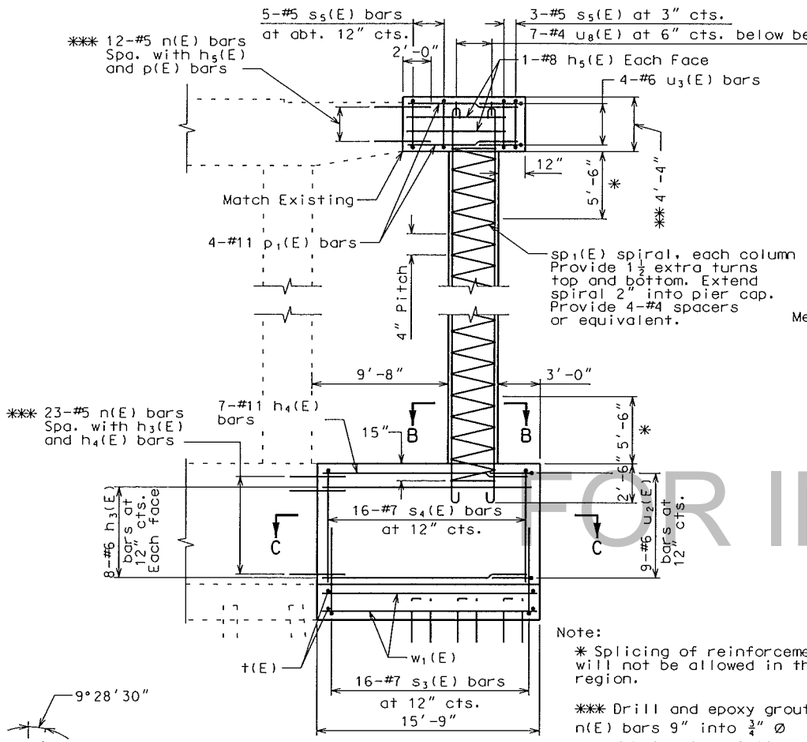

ELEVATION
(Looking East)

Note:
* Splicing of reinforcement will not be allowed in this region.

*** Drill and epoxy grout n(E) bars 9" into ¾" Ø cored holes in existing pier cap and crash wall 4" min. from sides.

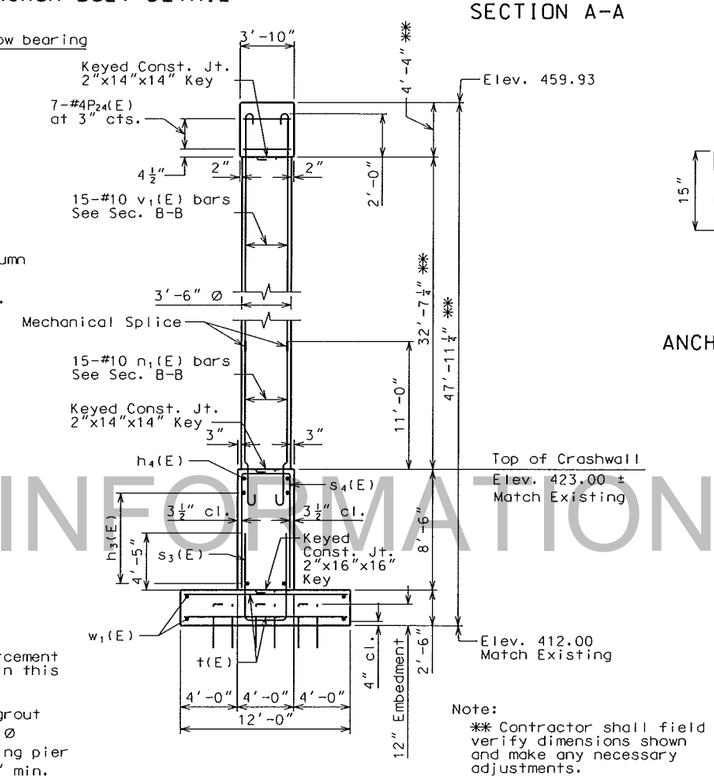

END VIEW

Note:
** Contractor shall field verify dimensions shown and make any necessary adjustments.

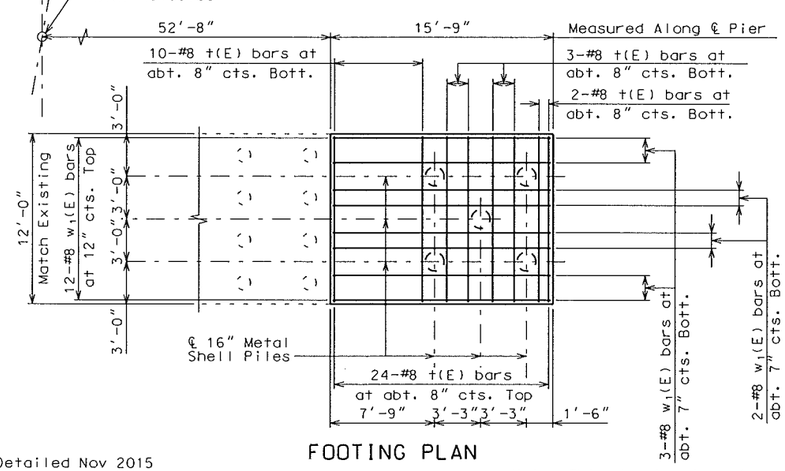

FOOTING PLAN

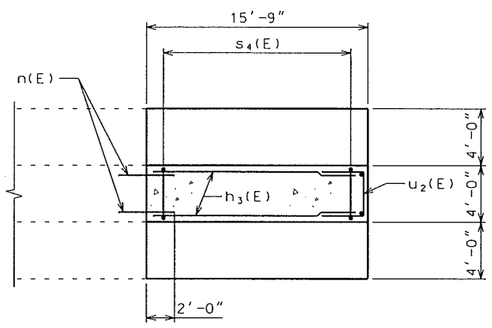

SECTION C-C

NOTES:

See Sheet No. 50 for bill of reinforcing steel for Pier 2.

Reinforcing steel shall be shifted to clear anchor bolt wells by at least 1/2".

Anchor bolt wells shall not be formed with galvanized corrugated steel pipe.

The contractor shall use a mechanical bar splice for n & v bars in column. The total bar lengths for bars indicated in the bill of reinforcing steel are determined based on the end of the bars being located flush to the face of the construction joint. No additional payment will be made for any additional bar lengths required for the mechanical bar splices. Mechanical bar splices shall be in accordance with Sec 706.

At the contractor's option, the hooks of V-Bars embedded in the beam cap may be oriented inward or outward for Seismic Category A. Bending the hook outward, away from the column core, is not allowed for Seismic Category B, C, or D.

All reinforcement in cast-in-place piling at intermediate bents is included in the substructure quantities for intermediate bents.

SUBSTRUCTURE QUANTITY TABLE FOR PIER 2

Item		Quantity
Class 1 Excavation	cu. yard	380
Cast-in-Place Concrete Piles (16 in.)	linear foot	225
Class B-1 Concrete (Substructure)	cu. yard	53.9
Reinforcing Steel (Epoxy Coated)	pound	9990
Mechanical Bar Splice	each	15

Notes: These quantities are included in the estimated quantities table on Sheet No. 2.

PIER 2 DETAILS

FOR INFORMATION ONLY

Detailed Nov 2015
Checked Nov 2015

Note: This drawing is not to scale. Follow dimensions.

LICENSED STRUCTURAL ENGINEER STEPHEN E. ALSBURY 081-5281 STATE OF ILLINOIS
EXPIRES 11-30-16

DATE
12/1/2015
DATE PREPARED

ROUTE	STATE
I-64	IL
DISTRICT	SHEET NO.
STL	7
COUNTY	
ST. CLAIR	
JOB NO.	
J612377C/J612377D	
CONTRACT ID.	
–	
PROJECT NO.	
–	
BRIDGE NO.	
082-0005	

DATE	DESCRIPTION

MISSOURI HIGHWAYS AND TRANSPORTATION COMMISSION
MoDOT
105 WEST CAPITOL
JEFFERSON CITY, MO 65102
1-888-ASK-MODOT (1-888-275-6636)

ABNA
4140 Lindell Boulevard
St. Louis, MO 63104
314-454-0222
Certificate of Authority: 001507

REV.