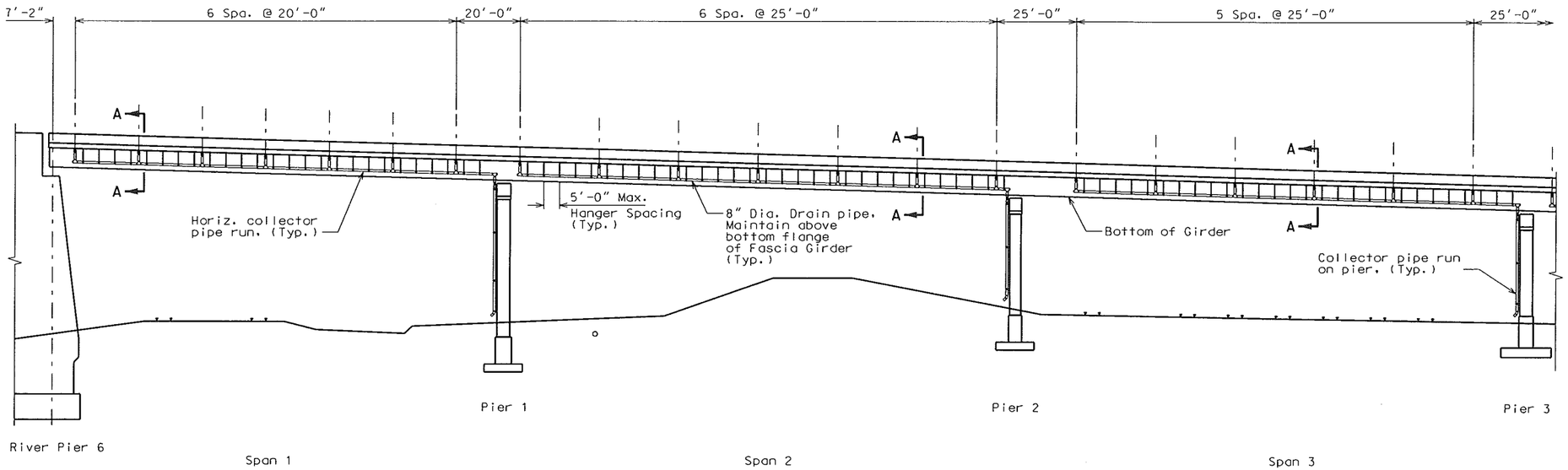

ELEVATION

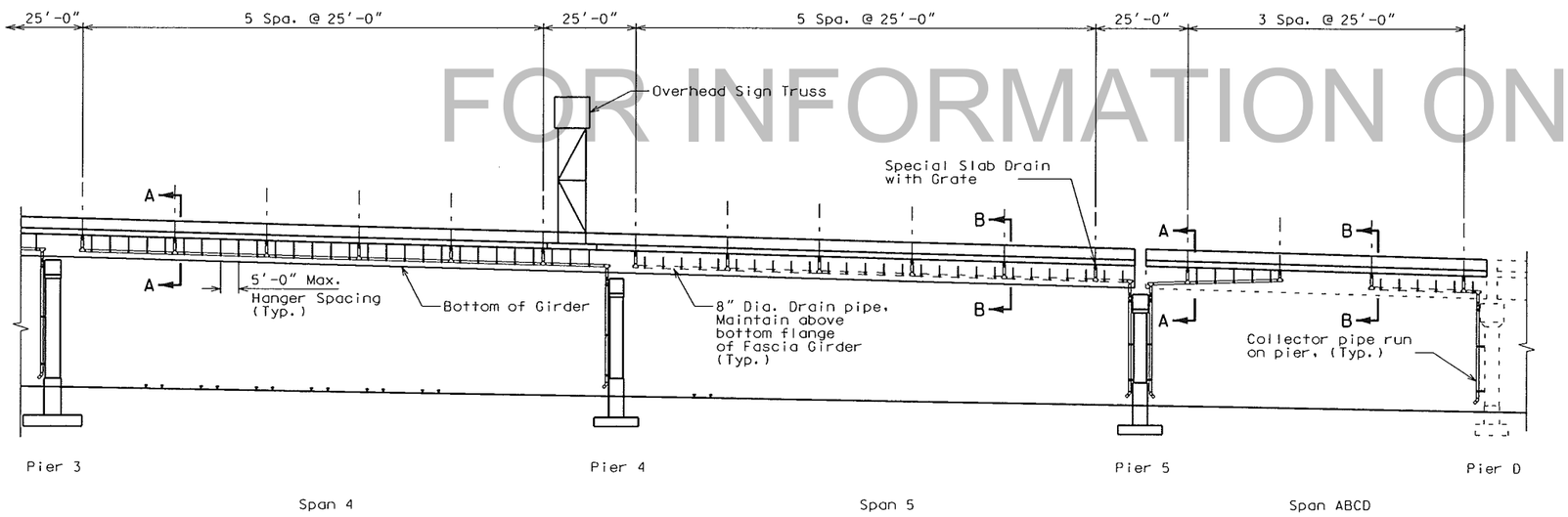

ELEVATION

FOR INFORMATION ONLY

DRAIN SYSTEM ON STRUCTURE

Detailed Nov 2015
Checked Nov 2015

Note: This drawing is not to scale. Follow dimensions.

LICENSED STRUCTURAL ENGINEER
STEPHEN E. ALSBURY
081-5281
STATE OF ILLINOIS
EXPIRES 11-30-16

DATE PREPARED	12/1/2015
ROUTE	I-64
STATE	IL
DISTRICT	STL
SHEET NO.	47
COUNTY	ST. CLAIR
JOB NO.	J612377C/J612377D
CONTRACT ID.	–
PROJECT NO.	–
BRIDGE NO.	082-0005

DESCRIPTION | DATE

MISSOURI HIGHWAYS AND TRANSPORTATION COMMISSION
MoDOT
105 WEST CAPITOL
JEFFERSON CITY, MO 65102
1-888-ASK-MODOT (1-888-275-6636)

ABNA
4140 Lindell Boulevard
St. Louis, MO 63104
314-454-0222
Certificate of Authority: 001507

REV.

c:\pwworking\omo\d1143615\B_0820005_047.dgn 9:29:24 AM 12/1/2015