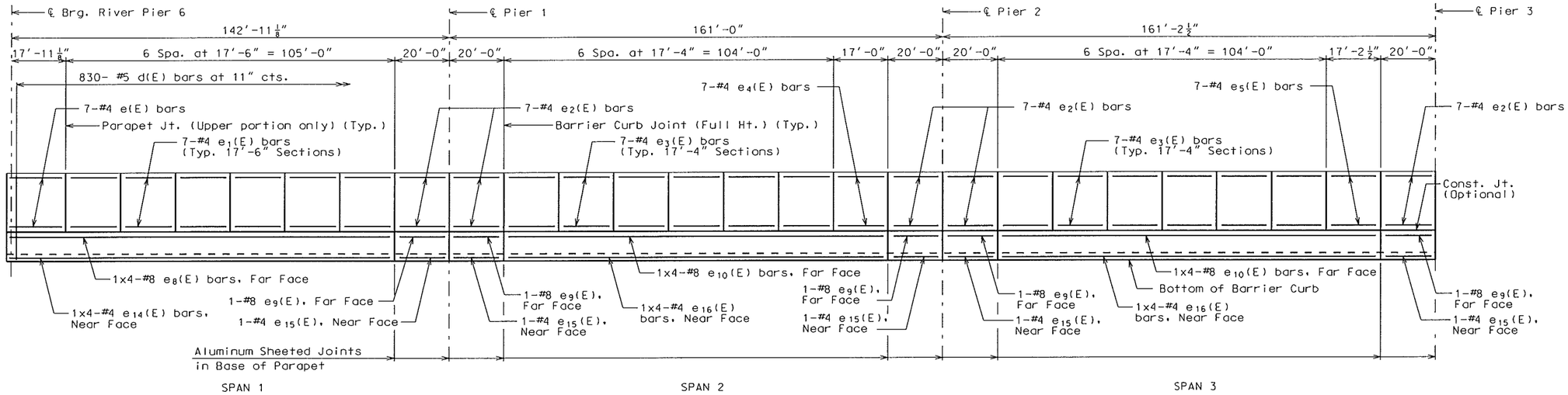

OUTSIDE ELEVATION OF EAST PARAPET

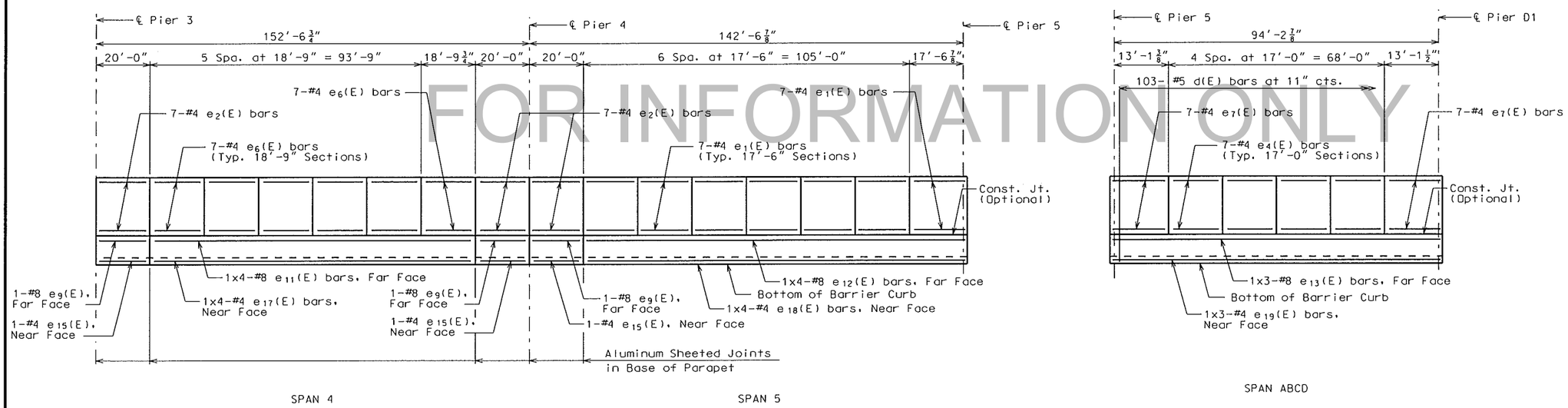

OUTSIDE ELEVATION OF EAST PARAPET

FOR INFORMATION ONLY

Notes:

All dimensions shown are measured along outside face of parapets.

For Deck Cross Section see Sheets 38 and 39.

For Section Thru Parapet and Parapet Joint Details, see Sheet 42.

Reinforcement bars designated (E) shall be Epoxy coated.

Bars detailed thus 62x10- #5 etc. indicates 62 lines of bars with 10 lengths per line.

Minimum lap length #4 bars = 2'-7" if spaced 6" or more.
#8 bars = 6'-9"

BARRIER CURB DETAILS

Detailed Nov 2015
Checked Nov 2015

Note: This drawing is not to scale. Follow dimensions.

LICENSED STRUCTURAL ENGINEER STEPHEN E. ALSBURY 081-5281 STATE OF ILLINOIS
EXPIRES 11-30-16

DATE 12/1/2015	
DATE PREPARED	
ROUTE I-64	STATE IL
DISTRICT STL	SHEET NO. 41
COUNTY ST. CLAIR	
JOB NO. J612377C/J612377D	
CONTRACT ID. –	
PROJECT NO. –	
BRIDGE NO. 082-0005	

DATE	DESCRIPTION

MISSOURI HIGHWAYS AND TRANSPORTATION COMMISSION
105 WEST CAPITOL
JEFFERSON CITY, MO 65102
1-888-ASK-MODOT (1-888-275-6636)

ABNA
4140 Lindell Boulevard
St. Louis, MO 63104
314-454-0222
Certificate of Authority: 001507

REV.

c:\pwworking\oma\d1143615\B_0820005_041.dgn 9:23:00 AM 12/1/2015