Estimated Quantities - J6I2377C

Item	Unit	Substr.	Superstr.	Total
Class 1 Excavation	cu. yard	625		625
Partial Removal of Existing Bridge Decks	sq. foot		6550	6550
Cast-in-Place Concrete Piles (16 in.)	linear foot	840		840
Test Piles	linear foot	120		120
Class B-1 Concrete (Substructure)	cu. yard	235.8		235.8
Slab on Steel	sq. yard		1228	1228
Safety Barrier Curb	linear foot		860	860
Mechaical Bar Splice	each	66	2247	2313
Reinforcing Steel (Epoxy Coated)	pound	41,190		41,190
Fabricated Structural Low Alloy Steel (Plate Girder) A709, Grade 50	pound		245,400	251,400
Drainage System on Structure	lump sum		1	1
Intermediate Field Coat (System G)	sq. foot		14,900	14,900
Finish Field Coat (System G)	sq. foot		14,900	14,900
Laminated Neoprene Bearing Pad Assembly	each		2	2
Type N PTFE Bearing	each		3	3

Estimated Quantities - J6I2377D

Item	Unit	Substr.	Superstr.	Total
Class 1 Excavation	cu. yard	46		46
Temporary Shoring Pier Replacement	lump sum	1		1
Partial Removal of Substructure Concrete	lump sum	1		1
Removal of Existing Expansion Joint Seal or Sealant	linear foot		106	106
Class B-1 Concrete (Substructure)	cu. yard	944.2		944.2
Reinforcing Steel (Epoxy Coated)	pound	174,870		174,870
Protective Coating - Concrete Bents and Piers (Epoxy) Note: Clear Appearance	lump sum	1		1
Fabricated Structural Low Alloy Steel (Misc.)	pound		3550	3550
Earthquake Restrainer Assemblies	each	1		1
Strip Seal Expansion Joint System	linear foot		72	72
Laminated Neoprene Bearing Pad Assembly (✱)	each		14	14
Steel Reinforced Elastomeric Expansion Joint System	linear foot		34	34

(✱) The quantity for Laminated Neoprene Bearing Pad Assembly shall be specific to the bearings to be located under the existing interior girders at Piers A1, BC1 and D1.

Estimated Quantities for Slab on Steel

Item		Total
Class B-2 Concrete	cu. yard	255
Reinforcing Steel (Epoxy Coated)	pound	92,670

Slab shall be cast-in-place with conventional forms.
Precast prestressed panels will not be permitted.

The table of Estimated Quantities for Slab on Steel represents the quantities used by the State in preparing the cost estimate for concrete slabs. The area of the concrete slab will be measured to the nearest square yard longitudinally from end of slab to end of slab and transversely from out to out of bridge slab (or with the horizontal dimensions as shown on the plan of slab).
Payment for conventional forms, all concrete and coated reinforcing steel except Mechaical Bar Splicer (MBS) will be considered completely covered by the contract unit price for the slab. Variations may be encountered in the estimated quantities but the variations cannot be used for an adjustment in the contract unit price.

GENERAL NOTES:

DESIGN SPECIFICATIONS:
2002 - AASHTO LFD Bridge Design Specifications (17th Edition)
Seismic Performance Category = B.
Bridge Deck Rating = 6

DESIGN LOADING:
HS20-44 and Alternate
18#/Sq. Ft. Future Wearing Surface
Earth = 120#/Cu. Ft., Equivalent Fluid Pressure = 45 #/Cu. Ft.

DESIGN UNIT STRESSES:

Class B-1 Concrete (Substructure)	f'c = 4,000 psi.
Class B-1 Concrete (Safety Barrier)	f'c = 4,000 psi.
Class B-2 Concrete (Superstructure, except Safety Barrier)	f'c = 4,000 psi.
Reinforcing Steel (Grade 60)	fy = 60,000 psi.
Structural Carbon Steel (ASTM A709 Grade 36)	fy = 36,000 psi.
Structural Steel (ASTM A709 Grade 50)	fy = 50,000 psi.

FABRICATED STEEL CONNECTIONS:
Field connections shall be made with 3/4" diameter high strength bolts and 13/16" diameter holes, except as noted.

JOINT FILLER:
All joint filler shall be in accordance with Sec 1057 for preformed sponge rubber expansion and partition joint filler, except as noted.

REINFORCING STEEL:
Minimum clearance to reinforcing steel shall be 1 1/2", unless otherwise shown.

TRAFFIC HANDLING:
Traffic to be maintained on structures during construction. See roadway plans for traffic control.

STRUCTURAL STEEL PROTECTIVE COATINGS:
Coating New Steel
Protective Coating: System G in accordance with Sec 1081.

Prime Coat: The cost of the prime coat will be considered completely covered by the contract unit price for the fabricated structural steel. Tint of the prime coat for System G shall be similar to the color of the field coat to be used.

Field Coat(s): The color of the field coat(s) shall be Gray (Federal Standard #26373). The cost of the intermediate field coat will be considered completely covered by the contract unit price for "Intermediate Field Coat (System G)". The cost of the finish field coat will be considered completely covered by the contract unit price for "Finish Field Coat (System G)".

At the option of the contractor, the intermediate field coat and finish field coat may be applied in the shop. The contractor shall exercise extreme care during all phases of loading, hauling, handling, erection and pouring of the slab to minimize damage and shall be fully responsible for all repairs and cleaning of the coating system as required by the engineer.

FOR INFORMATION ONLY

GENERAL NOTES (CONTINUED):

MISCELLANEOUS:
High strength bolts, nuts and washers will be sampled for quality assurance as specified in Sec 106.

Outline of old work is indicated by light dashed lines. Heavy lines indicate new work.

Contractor shall verify all dimensions in the field before ordering new material.

All existing dimensions shown were taken from as-built drawings or limited field measurements.

Finish each side of the construction joints with a 1/4" radius edging tool.

Bars bonded in old concrete not removed shall be cleanly stripped and embedded into new concrete where possible. If length is available old bars shall be extended into new concrete at least 40 diameters for plain bars and 30 diameters for deformed bars, unless otherwise noted.

Welds shall be NDT by the magnetic particle process as required by AASHTO/AWS D1.5 2002, Bridge Welding Code clause 6.7.2.

DIMENSIONS:
Longitudinal dimensions are based on the original design plans.

RESIN ANCHORS: (Pier No. 1, 2, 3, 4, 5 Westbound, 5 Eastbound , A1, BC1 and D1)
The Contractor shall use one of the qualified resin anchor systems in accordance with Sec 1039.

Cost of furnishing and installing the resin anchor system complete-in-place will be considered completely covered by the contract price for other items.

The minimum embedment depth in concrete with f'c = 4,000 psi for the resin anchor system shall be that required to meet the minimum ultimate pullout strength in accordance with Sec 1039 but shall not be less than 5".

An epoxy coated #10 Grade 60 reinforcing bar shall be substituted for the 1 1/4" Ø threaded rod.

An epoxy coated #5 Grade 60 reinforcing bar shall be substituted for the 5/8" Ø threaded rod.

An epoxy coated #4 Grade 60 reinforcing bar shall be substituted for the 1/2" Ø threaded rod.

Cost of furnishing and installing the cone expansion anchor will be considered completely covered by the contract price for Fabricated Structural Carbon Steel (Plate Girder).

The 1/2" diameter cone expansion anchors shall have a minimum ultimate pullout strength of 7,500 lbs. in concrete with f'c = 4,000 psi.

The 3/4" diameter cone expansion anchors shall have a minimum ultimate pullout strength of 12,000 lbs. in concrete with f'c = 4,000 psi.

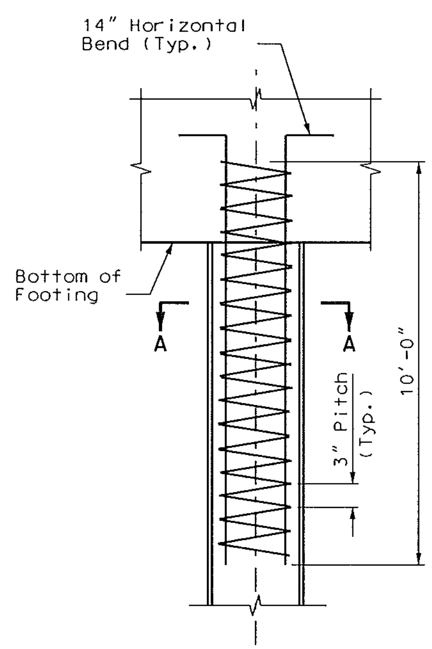

ELEVATION

Note:
Each Cast-in-Place Concrete Pile has 210 pounds of Epoxy Coated Reinforcement.

Total Weight for 20 piles = 4200 pounds

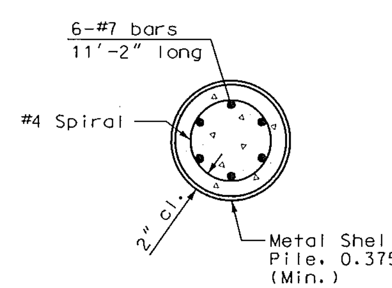

SECTION A-A

METAL SHELL PILE REINFORCEMENT

FOUNDATION DATA

TYPE	DESIGN DATA		PIER NO. 1	PIER NO. 2	PIER NO. 3	PIER NO. 4
Load Bearing Pile	Pile Type and Size		CIP 16"	CIP 16"	CIP 16"	CIP 16"
	CIP Type		Foundation	Foundation	Foundation	Foundation
	CIP Standard Plan		702.02	702.02	702.02	702.02
	Number	ea	5	5	6	4
	Approximate Length per Each	ft	45	45	45	55
	Pile Driving Verification Method		IDOT See JSP	IDOT See JSP	IDOT See JSP	IDOT See JSP
	Design Bearing	kip	160	160	192	204
	Minimum Tip Penetration (Elev.)	ft	361	368	366	356
	Criteria for Minimum Tip Penetration		Minimum Embedment	Minimum Embedment	Minimum Embedment	Minimum Embedment
	Hammer Energy Required	ft-lb	18,000	18,000	21,600	23,000

✱ One concrete test pile shall be driven in permanent position, one for each Pier, at Piers No. 1 and 4.

GENERAL NOTES AND SUMMARY OF ESTIMATED QUANTITIES

Detailed Nov 2015
Checked Nov 2015

Note: This drawing is not to scale. Follow dimensions.

LICENSED STRUCTURAL ENGINEER STEPHEN E. ALSBURY 081-5251 STATE OF ILLINOIS
EXPIRES 11-30-16

DATE	12/1/2015
DATE PREPARED	
ROUTE	I-64
STATE	IL
DISTRICT	STL
SHEET NO.	2
COUNTY	ST. CLAIR
JOB NO.	J6I2377C/J6I2377D
CONTRACT ID.	-
PROJECT NO.	-
BRIDGE NO.	082-0005

DESCRIPTION
DATE

MISSOURI HIGHWAYS AND TRANSPORTATION COMMISSION
105 WEST CAPITOL
JEFFERSON CITY, MO 65102
1-888-ASK-MODOT (1-888-275-6636)

ABNA
4140 Lindell Boulevard
St. Louis, MO 63104
314-454-0222
Certificate of Authority: 001507

REV.