(#) Pedestal heights shown are estimated based on As-Built drawings. It is contractor's responsibility to verify pedestal heights in field and adjust new pedestal depth as necessary without extra payment. All pedestals to be level.

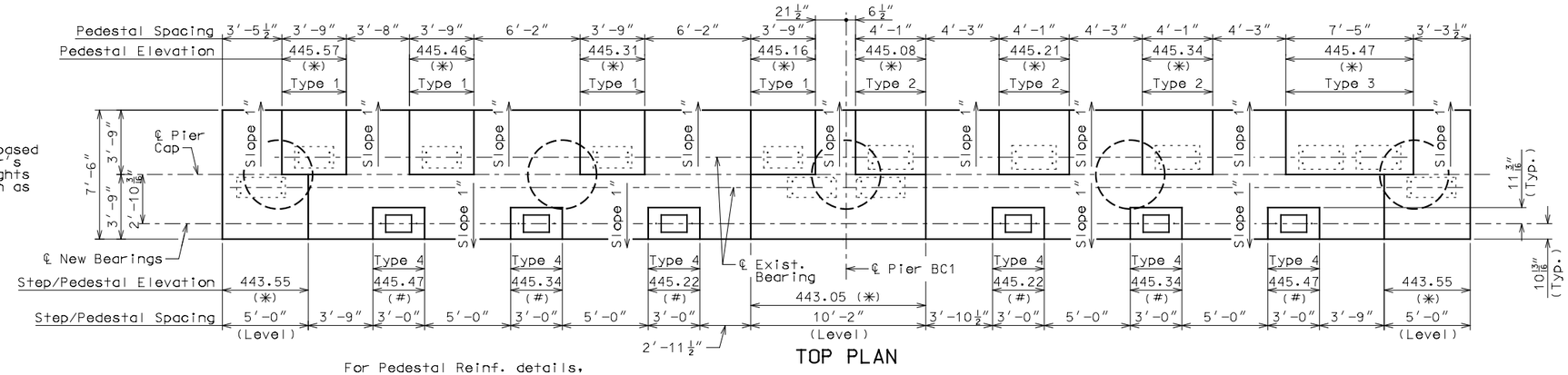

TOP PLAN

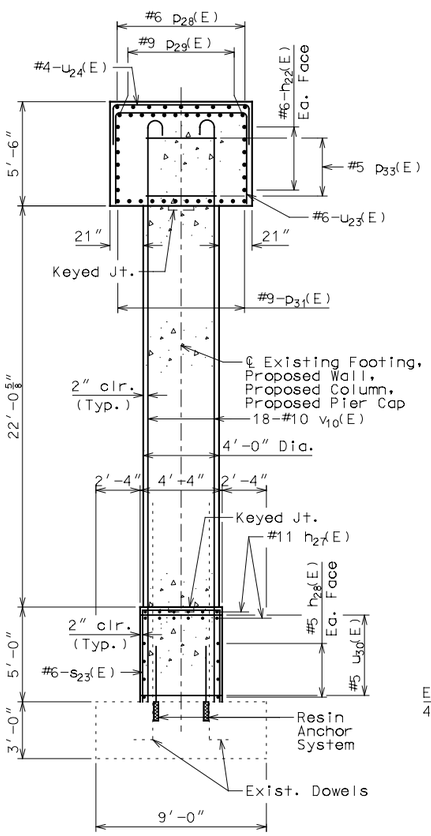

SECTION A-A

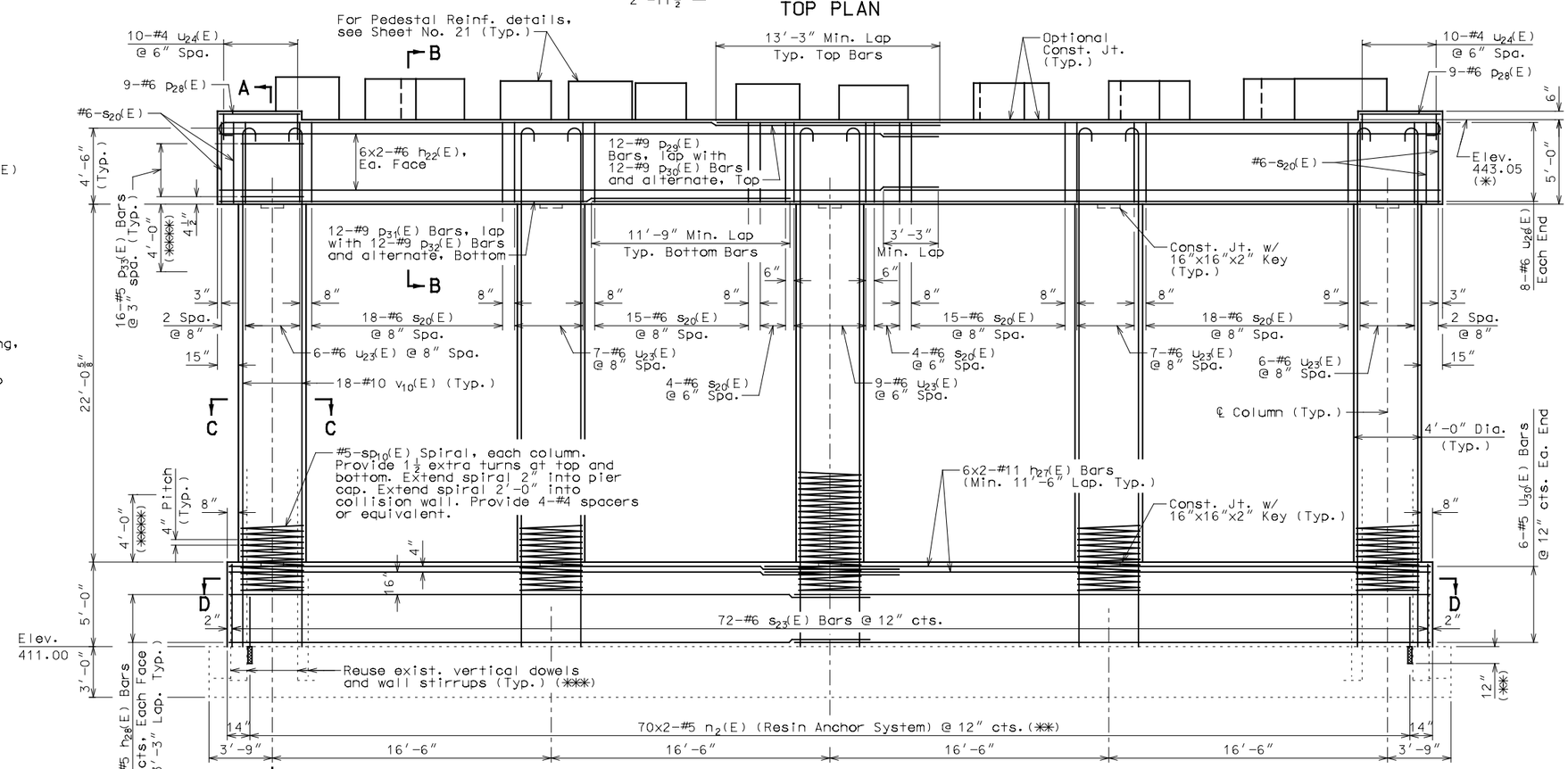

ELEVATION

Notes:

Reinforcing steel shall be shifted to clear anchor bolt well by at least ½".

See As-Built details for locations of vertical column dowels and wall stirrups to be used in new construction.

See Sheet No. 19 for removal of existing Pier BC1.

See Sheet No. 52 for bill of reinforcing steel for Pier BC1.

Notes (Cont.):

(*) Elevations shown are As-Built beam seat elevations. It is contractor's responsibility to verify elevations in field and adjust new cap depth as necessary without extra payment. All girder seats to be level.

(**) Resin anchors shall have a minimum embedment length of 12"

(***) Cleanly strip existing vertical column dowels and wall stirrups. If dowels or stirrups deemed reusable by the engineer incorporate into new column and wall concrete. If deemed not usable by the engineer cut existing rebar at the top of existing footing and place an equivalent size dowel adjacent to existing cut bar.

(****) Lapping of spiral reinforcement not allowed in this region.

PIER BC1

Detailed Oct 2015
Checked Oct 2015

Note: This drawing is not to scale. Follow dimensions.

STATE OF ILLINOIS
MICHAEL B. QUIRIN
081-006070
CHICAGO, ILLINOIS
LICENSED STRUCTURAL ENGINEER

THIS SHEET HAS BEEN SIGNED, SEALED AND DATED ELECTRONICALLY

DATE PREPARED	
11/23/2015	
ROUTE	STATE
I-64	IL
DISTRICT	SHEET NO.
STL	20
COUNTY	
ST. CLAIR	
JOB NO.	
J6I2377C/J6I2377D	
CONTRACT ID.	
—	
PROJECT NO.	
—	
BRIDGE NO.	
082-0005	

DESCRIPTION

DATE

MISSOURI HIGHWAYS AND TRANSPORTATION COMMISSION
105 WEST CAPITOL
JEFFERSON CITY, MO 65102
1-888-ASK-MODOT (1-888-275-6636)

HDR Engineering, Inc.
401 S. 18th Street
Suite 300
St. Louis, MO 63103-2267
314-425-8300
Certificate of Authority: 000856