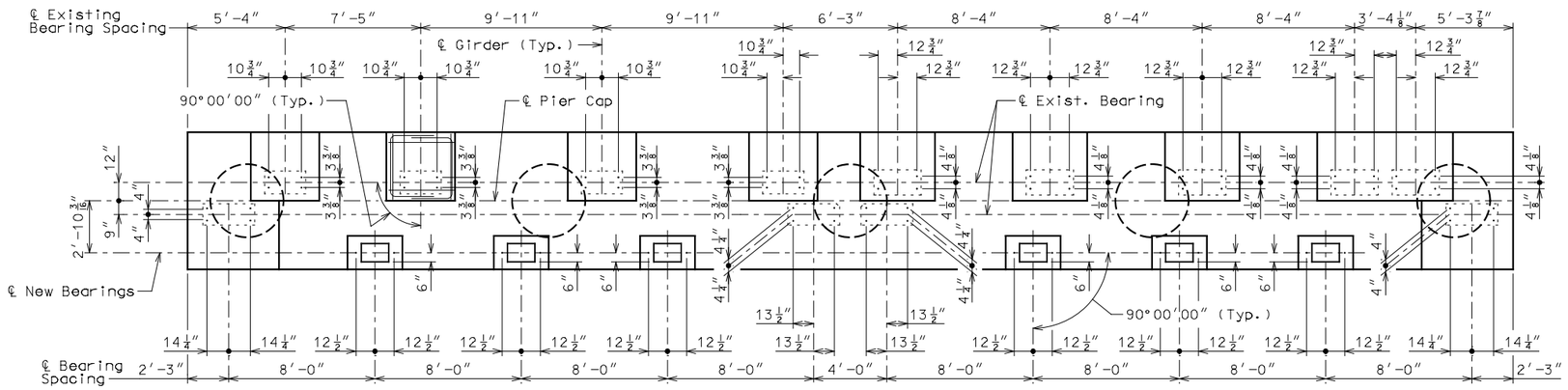

TOP PLAN OF EXISTING BEARING, NEW BEARING AND ANCHOR BOLT SPACING

Note: Bearing orientation, bearing spacing and anchor bolt spacing for existing bearing locations shown are taken from As-Built drawings. It is the contractor's responsibility to verify these prior to forming the pier cap. Contractor shall reinstall the bearings in the same location and orientation as they are currently installed on the existing pier cap.

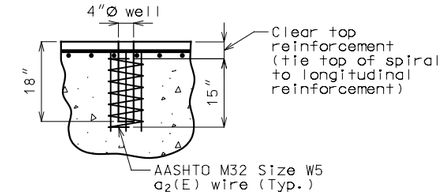

DETAIL OF ANCHOR BOLT WELLS

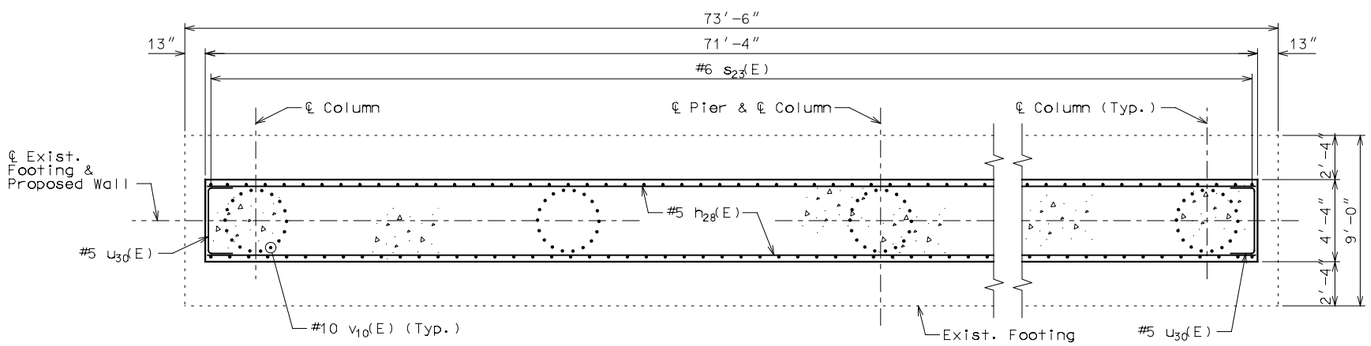

SECTION D-D

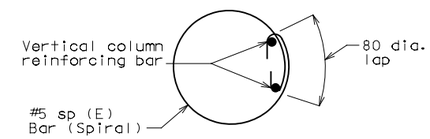

ANCHOR SPLICES IN SPIRAL AROUND VERTICAL BAR

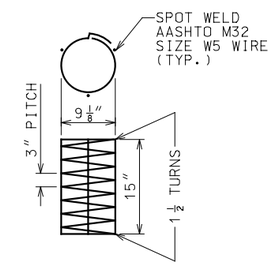

DETAIL OF SPIRAL REINFORCMENT

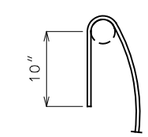

DETAILS OF 135° SEISMIC SPIRAL TIE HOOK

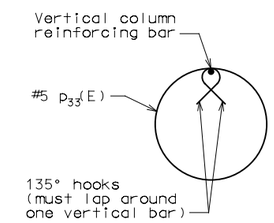

DETAIL OF SEISMIC STIRRUP BAR

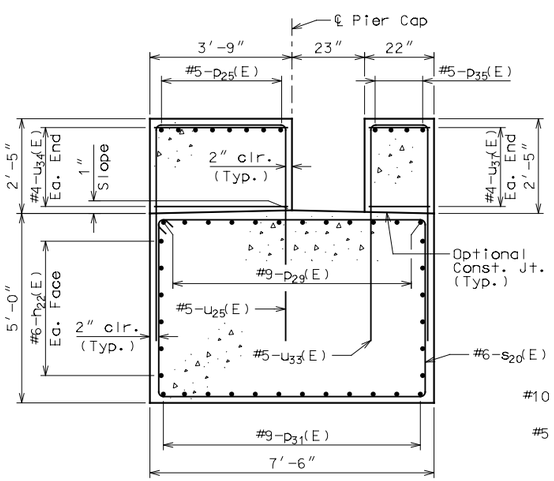

SECTION B-B

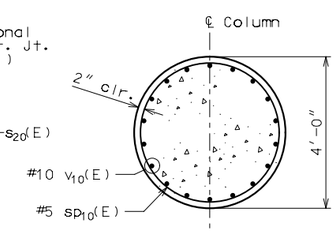

SECTION C-C

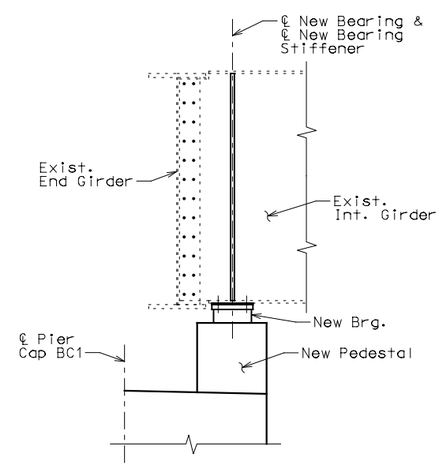

NEW BEARING SCHEMATIC

Note: For New Bearing Stiffener and New Bearing details, see Sheet No. 30.

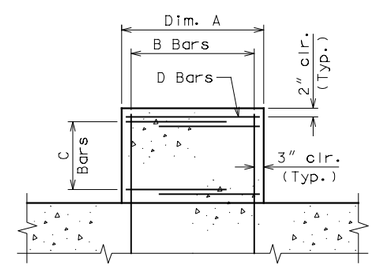

PEDESTAL REINFORCEMENT DETAIL

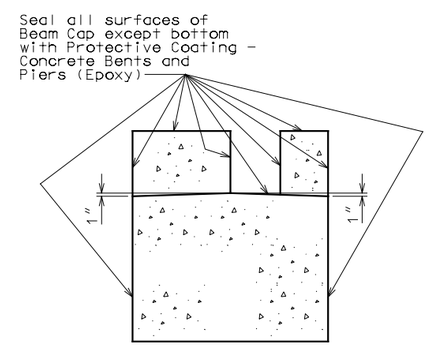

PROTECTIVE COATING

Pedestal Type	Dim. A	B Bars	C Bars	D Bars
1	3'-9"	8-#5 u_{25}(E) Eq. Spa.	5-#4 u_{34}(E) Eq. Spa. (✱)	8-#5 p_{25}(E)
2	4'-1"	9-#5 u_{25}(E) Eq. Spa.	5-#4 u_{35}(E) Eq. Spa. (✱)	8-#5 p_{26}(E)
3	7'-5"	15-#5 u_{25}(E) Eq. Spa.	5-#4 u_{36}(E) Eq. Spa. (✱)	8-#5 p_{27}(E)
4	3'-0"	6-#5 u_{33}(E) Eq. Spa.	5-#4 u_{37}(E) Eq. Spa. (✱)	4-#5 p_{35}(E)

(✱) Each end of pedestal

PIER BC1

Detailed Oct 2015
Checked Oct 2015

Note: This drawing is not to scale. Follow dimensions.

STATE OF ILLINOIS
MICHAEL B. QUIRIN
081-006070
CHICAGO, ILLINOIS
LICENSED STRUCTURAL ENGINEER

THIS SHEET HAS BEEN SIGNED, SEALED AND DATED ELECTRONICALLY

DATE PREPARED	
11/23/2015	
ROUTE	STATE
I-64	IL
DISTRICT	SHEET NO.
STL	21
COUNTY	
ST. CLAIR	
JOB NO.	
J6I2377C/J6I2377D	
CONTRACT ID.	
—	
PROJECT NO.	
—	
BRIDGE NO.	
082-0005	

DESCRIPTION

DATE

MISSOURI HIGHWAYS AND TRANSPORTATION COMMISSION
105 WEST CAPITOL
JEFFERSON CITY, MO 65102
1-888-ASK-MODOT (1-888-275-6636)

HDR Engineering, Inc.
401 S. 18th Street
Suite 300
St. Louis, MO 63103-2267
314-425-8300
Certificate of Authority: 000856