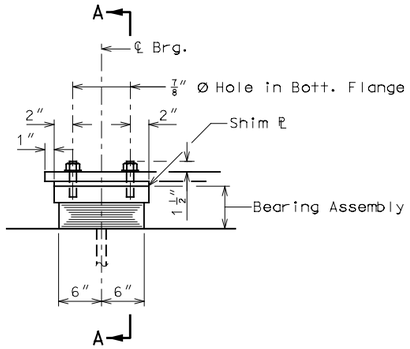

ELEVATION AT PIER

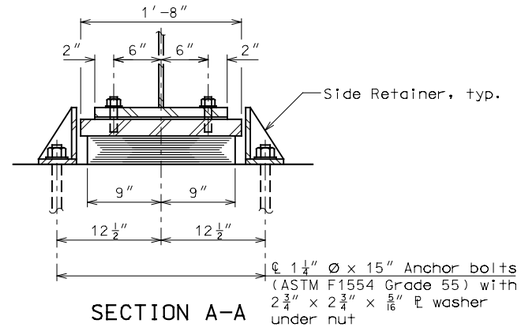

SECTION A-A

ELASTOMERIC EXP. BRG.

5 Bearings at Pier A1
6 Bearings at Pier BC1
3 Bearings at Pier D1

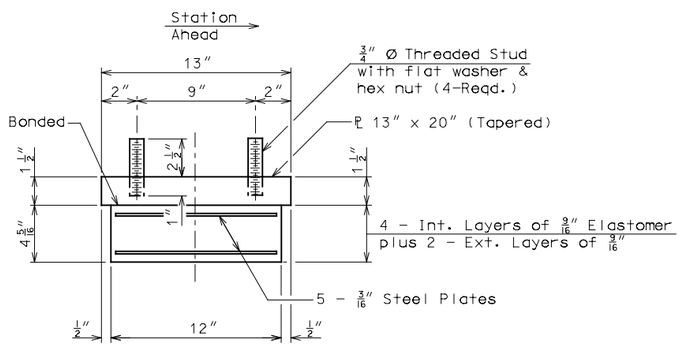

BEARING ASSEMBLY

Note:
Shim plates shall not be placed under Bearing Assembly.

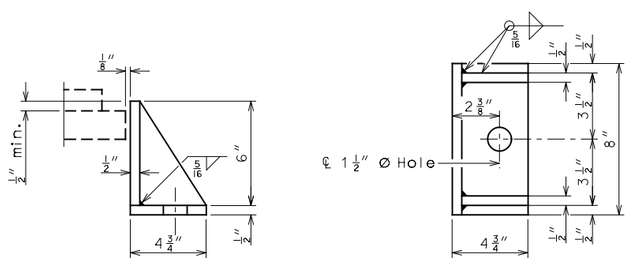

SIDE RETAINER

Equivalent rolled angle with stiffeners will be allowed in lieu of welded plates.

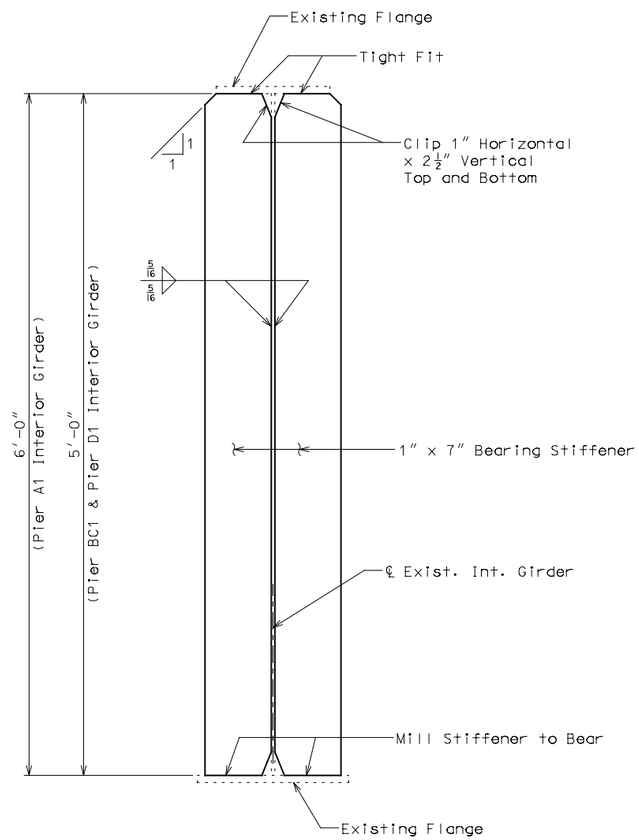

NEW BEARING STIFFENER DETAIL

5 sets of Bearing Stiffeners at Pier A1
6 sets of Bearing Stiffeners at Pier BC1
3 sets of Bearing Stiffeners at Pier D1

Notes:

Anchor bolts shall be 1 1/4" ASTM F1554 Grade 55 swedged bolts and shall extend 15" into the concrete with ASTM A563 Grade A Hex or Heavy Hex nuts. Actual manufacturer's certified mill test reports (chemical and mechanical) shall be provided. Swedging shall be 1" less than extension into the concrete.

All structural steel for the anchor bolts and heavy hexagon nuts shall be coated with a minimum of two coats of inorganic zinc primer (5 mils minimum).

Neoprene Elastomeric Pads shall be 60 Durometer.

Bearing Stiffeners shall be added to each side of the existing web of interior girders at Piers A1, BC1 and D1 where new elastomeric bearings are being added.

℄ of bearing stiffener shall be located at the ℄ of new elastomeric bearings.

All bearing stiffeners are AASHTO M270 Grade 50.

Payment for all bearing stiffeners will be considered completely covered by the contract unit price for Fabricated Structural Low Allow Steel (Misc.) per pound.

Payment for all bearings will be considered completely covered by the contract unit price for Laminated Neoprene Bearing Pad Assembly per each.

LAMINATED NEOPRENE BEARING ASSEMBLY & BEARING STIFFENER DETAILS
PIERS A1, BC1 & D1

Detailed Oct 2015
Checked Oct 2015

Note: This drawing is not to scale. Follow dimensions.

STATE OF ILLINOIS
MICHAEL B. QUIRIN
081-006070
CHICAGO, ILLINOIS
LICENSED STRUCTURAL ENGINEER

THIS SHEET HAS BEEN SIGNED, SEALED AND DATED ELECTRONICALLY

DATE PREPARED	11/23/2015
ROUTE	I-64
STATE	IL
DISTRICT	STL
SHEET NO.	30
COUNTY	ST. CLAIR
JOB NO.	J6I2377C/J6I2377D
CONTRACT ID.	—
PROJECT NO.	—
BRIDGE NO.	082-0005

DESCRIPTION

DATE

MISSOURI HIGHWAYS AND TRANSPORTATION COMMISSION
105 WEST CAPITOL
JEFFERSON CITY, MO 65102
1-888-ASK-MODOT (1-888-275-6636)

HDR Engineering, Inc.
401 S. 18th Street
Suite 300
St. Louis, MO 63103-2267
314-425-8300
Certificate of Authority: 000856