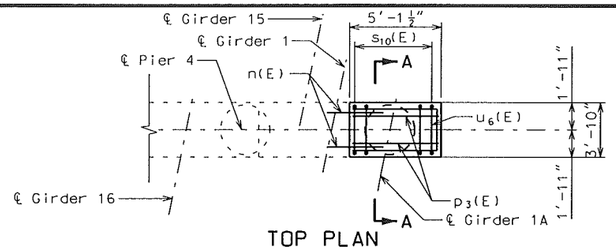

TOP PLAN

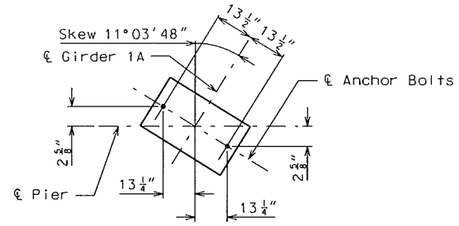

ANCHOR BOLT DETAIL

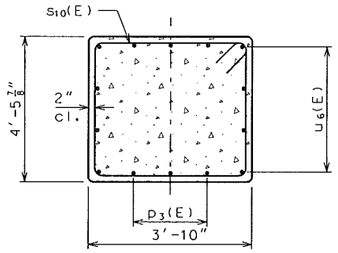

SECTION A-A

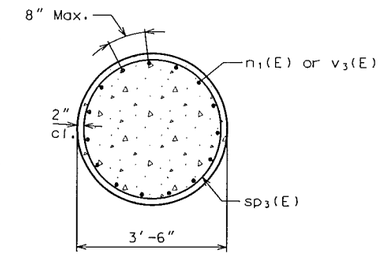

SECTION B-B

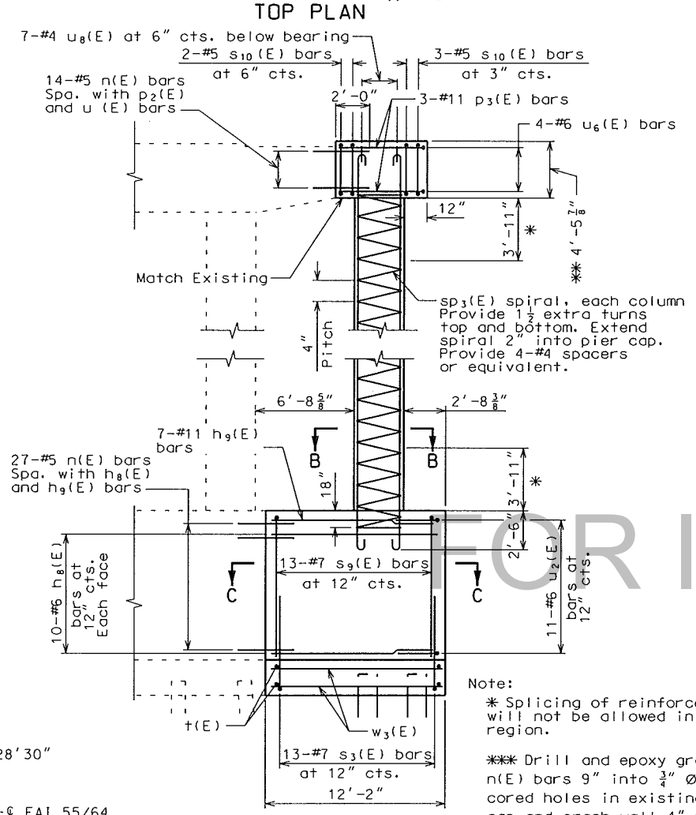

Note:
* Splicing of reinforcement will not be allowed in this region.

*** Drill and epoxy grout n(E) bars 9" into ¾" Ø cored holes in existing pier cap and crash wall 4" min. from sides.

ELEVATION
(Looking East)

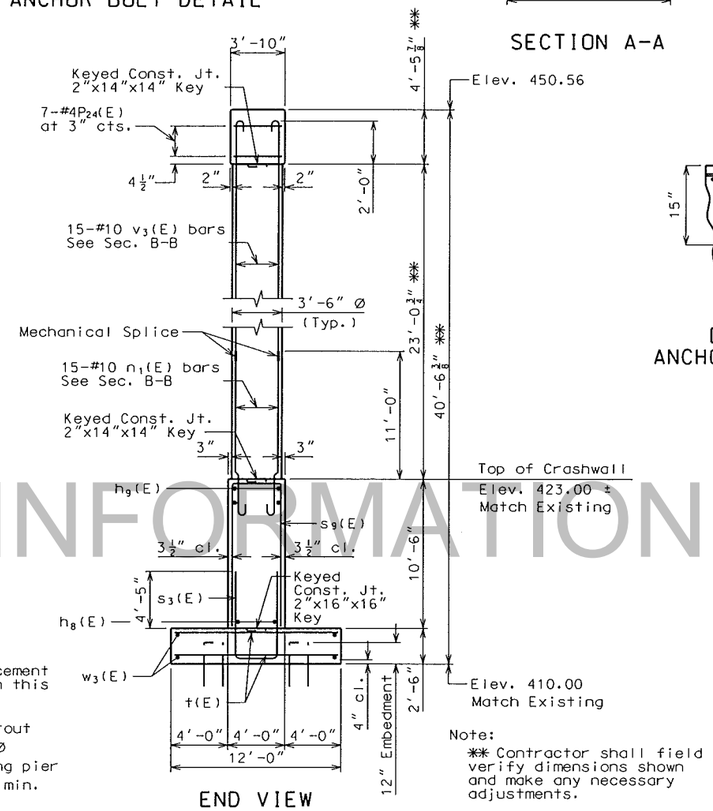

Note:
** Contractor shall field verify dimensions shown and make any necessary adjustments.

END VIEW

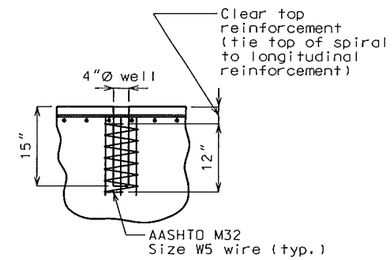

DETAIL OF ANCHOR BOLT WELLS

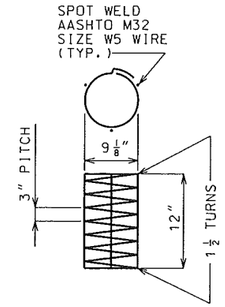

DETAIL OF SPIRAL REINFORCEMENT

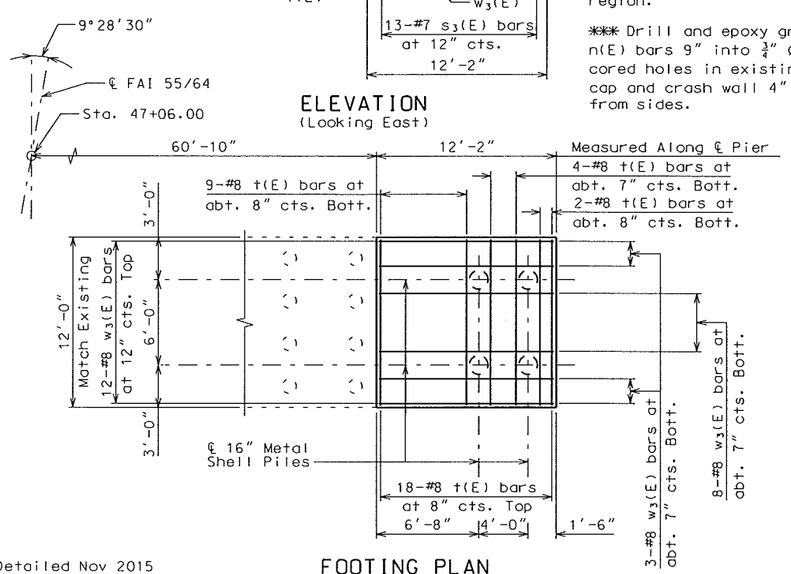

FOOTING PLAN

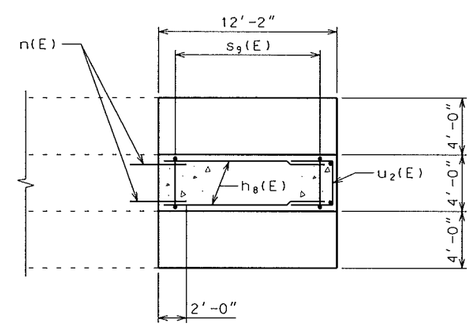

SECTION C-C

NOTES:

See Sheet No. 50 for bill of reinforcing steel for Pier 4.

Reinforcing steel shall be shifted to clear anchor bolt wells by at least 1/2".

Anchor bolt wells shall not be formed with galvanized corrugated steel pipe.

The contractor shall use a mechanical bar splice for n & v bars in columns. The total bar lengths for bars indicated in the bill of reinforcing steel are determined based on the end of the bars being located flush to the face of the construction joint. No additional payment will be made for any additional bar lengths required for the mechanical bar splices. Mechanical bar splices shall be in accordance with Sec 706.

At the contractor's option, the hooks of V-Bars embedded in the beam cap may be oriented inward or outward for Seismic Category A. Bending the hook outward, away from the column core, is not allowed for Seismic Category B, C, or D.

All reinforcement in cast-in-place piling at intermediate bents is included in the substructure quantities for intermediate bents.

SUBSTRUCTURE QUANTITY TABLE FOR PIER 4

Item		Quantity
Class 1 Excavation	cu. yard	35
Cast-in-Place Concrete Piles (16 in.)	linear foot	165
Test Pile	linear foot	65
Class B-1 Concrete (Substructure)	cu. yard	43.9
Reinforcing Steel (Epoxy Coated)	pound	7980
Mechanical Bar Splice	each	15

Notes: These quantities are included in the estimated quantities table on Sheet No. 2.

FOR INFORMATION ONLY

Detailed Nov 2015
Checked Nov 2015

Note: This drawing is not to scale. Follow dimensions.

PIER 4 DETAILS

LICENSED STRUCTURAL ENGINEER STEPHEN E. ALSBURY 081-5281 STATE OF ILLINOIS
EXPIRES 11-30-16

DATE	12/1/2015
DATE PREPARED	
ROUTE	I-64
STATE	IL
DISTRICT	STL
SHEET NO.	9
COUNTY	ST. CLAIR
JOB NO.	J6I2377C/J6I2377D
CONTRACT ID.	–
PROJECT NO.	–
BRIDGE NO.	082-0005

DESCRIPTION

DATE

MISSOURI HIGHWAYS AND TRANSPORTATION COMMISSION
105 WEST CAPITOL
JEFFERSON CITY, MO 65102
1-888-ASK-MODOT (1-888-275-6636)

ABNA
4140 Lindell Boulevard
St. Louis, MO 63104
314-454-0222
Certificate of Authority: 001507

REV.