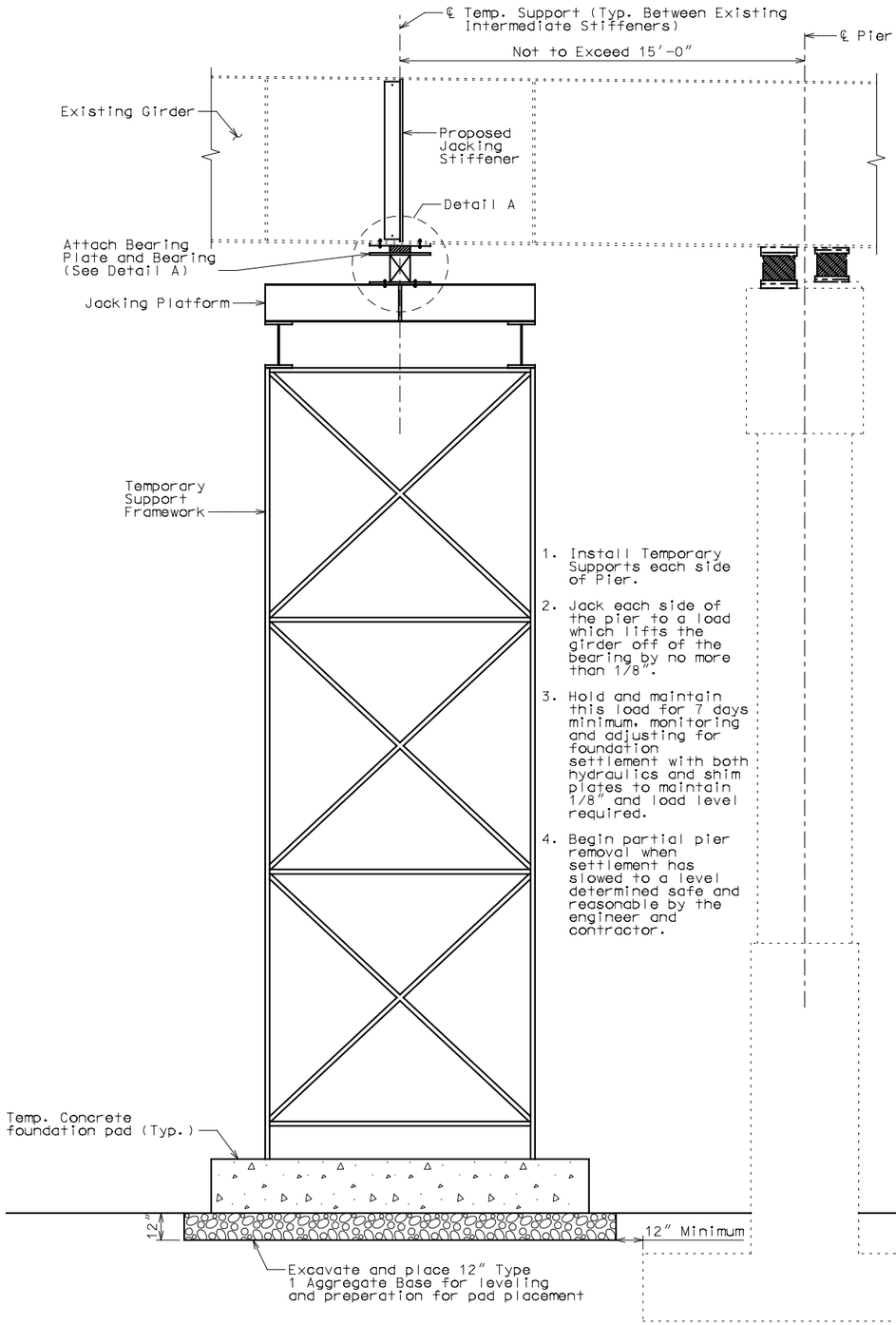

1. Install Temporary Supports each side of Pier.
2. Jack each side of the pier to a load which lifts the girder off of the bearing by no more than 1/8".
3. Hold and maintain this load for 7 days minimum, monitoring and adjusting for foundation settlement with both hydraulics and shim plates to maintain 1/8" and load level required.
4. Begin partial pier removal when settlement has slowed to a level determined safe and reasonable by the engineer and contractor.

ELEVATION SHOWING TEMPORARY SUPPORT AT PIER

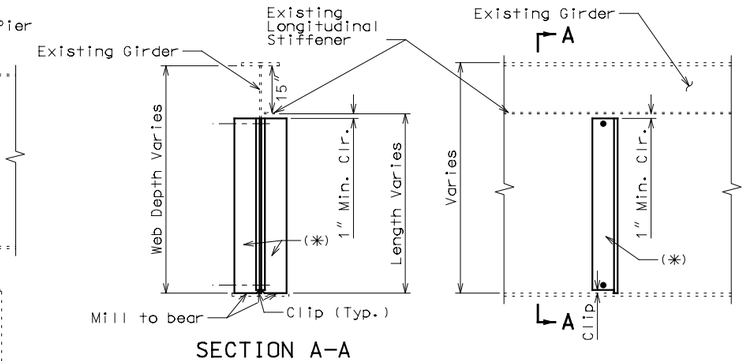

SECTION A-A

TYPICAL ELEVATION SHOWING PROPOSED JACKING STIFFENER ON EXISTING GIRDER WITH LONGITUDINAL STIFFENER

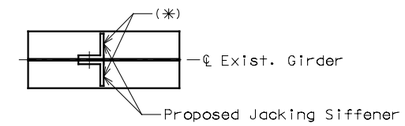

SECTION C-C

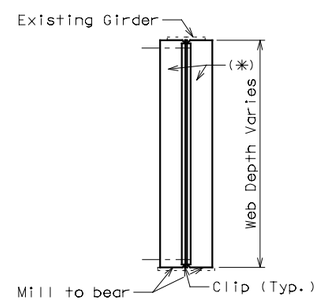

SECTION B-B

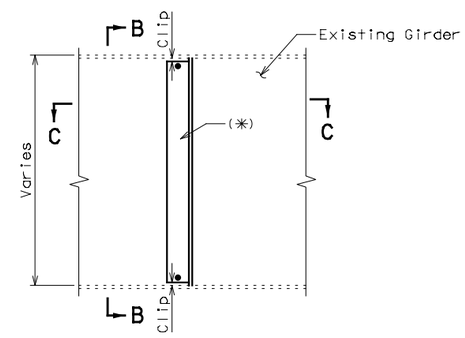

TYPICAL ELEVATION SHOWING PROPOSED JACKING STIFFENER ON EXISTING GIRDER

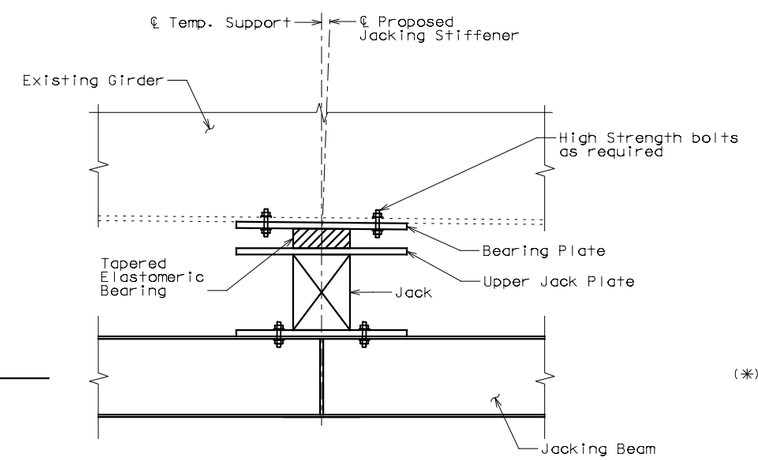

DETAIL A

(Alternate Bearing & Jacking arrangments will be allowed. This detail shows only one viable concept for contractor consideration)

(*) Proposed Jacking Stiffener to be designed by contractor. Design calculations to be submitted for engineers approval before fabrication of Jacking Stiffeners.

TEMPORARY SUPPORTS

Detailed Oct 2015
Checked Oct 2015

Note: This drawing is not to scale. Follow dimensions.

Sheet No. 4 of 73

STATE OF ILLINOIS
MICHAEL B. QUIRIN
081-006070
CHICAGO, ILLINOIS
LICENSED STRUCTURAL ENGINEER

THIS SHEET HAS BEEN SIGNED, SEALED AND DATED ELECTRONICALLY

DATE PREPARED	11/23/2015
ROUTE	I-64
STATE	IL
DISTRICT	STL
SHEET NO.	4
COUNTY	ST. CLAIR
JOB NO.	J6I2377C/J6I2377D
CONTRACT ID.	–
PROJECT NO.	–
BRIDGE NO.	082-0005

DATE	DESCRIPTION

MISSOURI HIGHWAYS AND TRANSPORTATION COMMISSION
105 WEST CAPITOL
JEFFERSON CITY, MO 65102
1-888-ASK-MODOT (1-888-275-6636)

HDR Engineering, Inc.
401 S. 18th Street
Suite 300
St. Louis, MO 63103-2267
314-425-8300
Certificate of Authority: 000856

c:\pwworking\oma\d1250603\B_0820005_004_J6I2377C.dgn 1:20:08 PM 11/23/2015