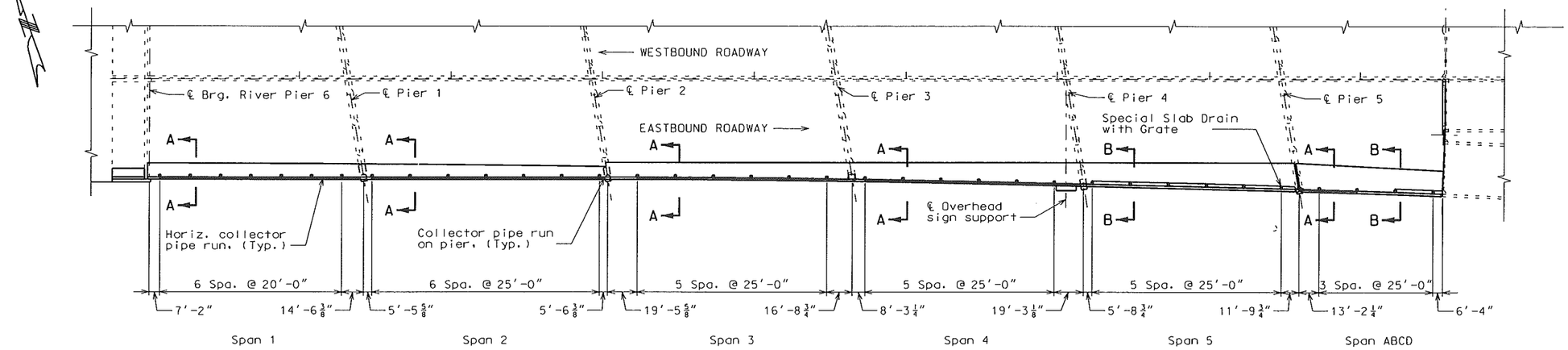

PLAN

Drain spacing is measured along gutter lines. Drains may be shifted slightly from the location shown to clear existing obstructions.

Reinforcing steel shall be shifted to clear drains

FOR INFORMATION ONLY

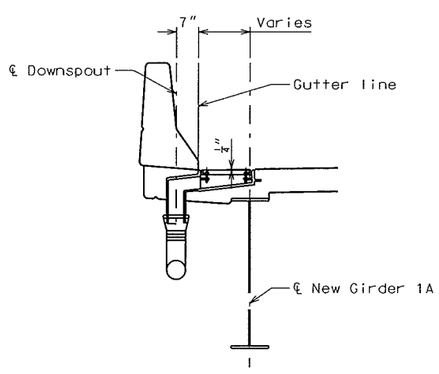

SECTION A-A AT OUTSIDE PARAPETS IN SPANS 1 THRU 4 AND ABCD

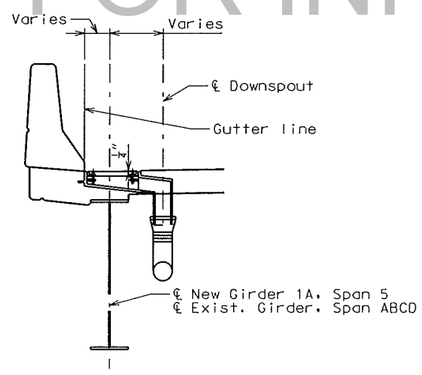

SECTION B-B AT OUTSIDE PARAPET IN SPANS 5 AND ABCD

NOTES:

Work this sheet with sheets 47 and 48.

For scupper details see sheet 49.

Bill of material for BX(E) bars is on the slab detail sheets per each roadway section.

Horizontal collector pipe runs shall have a minimum slope of 1/4" per foot.

3/4" Dia. stud bolts shall conform to AASHTO M164 and shall have 6" of threads at each end.

Pipe Supports shall be spaced as recommended by the manufacturer. And as shown at intersection of horizontal and vertical runs of pipe.

All collector pipes and fittings, except as noted, shall be reinforced thermosetting plastic (fiberglass).

Fiberglass pipe shall conform to ASTM D2996 with short-time rupture strength hoop tensile stress of 30,000 psi min.

The exterior surface of the scuppers and the complete drainage system shall be painted with the vinyl enamel coat painting specified for structural steel.

Scuppers and pipes adjacent to structural steel shall be painted the same color as the steel. And pipes attached to the piers shall be painted to match the concrete.

The fiberglass pipes shall be prewashed as per MIL-P-15328. Cost of prewashing and painting is to be included in the lump sum price for drainage system.

Cost of all piping, reducers, flanges, fittings, supports and hardware complete in place shall be included in the lump sum price bid for drainage system.

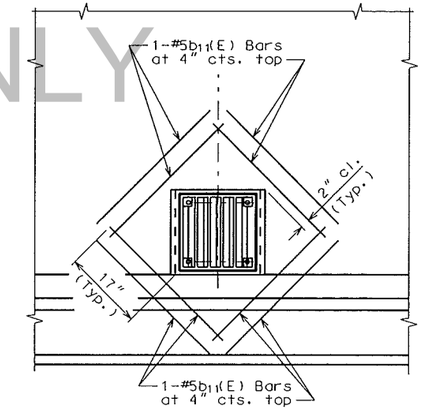

PLAN - SCUPPER REINFORCEMENT

SLAB DRAINAGE DETAILS

Detailed Nov 2015
Checked Nov 2015

Note: This drawing is not to scale. Follow dimensions.

LICENSED STRUCTURAL ENGINEER STEPHEN E. ALSBURY 081-5281 STATE OF ILLINOIS
EXPIRES 11-30-16

DATE 12/1/2015	
DATE PREPARED	
ROUTE I-64	STATE IL
DISTRICT STL	SHEET NO. 46
COUNTY ST. CLAIR	
JOB NO. J612377C/J612377D	
CONTRACT ID. –	
PROJECT NO. –	
BRIDGE NO. 082-0005	

DESCRIPTION	DATE

MISSOURI HIGHWAYS AND TRANSPORTATION COMMISSION
105 WEST CAPITOL
JEFFERSON CITY, MO 65102
1-888-ASK-MODOT (1-888-275-6636)

ABNA
4140 Lindell Boulevard
St. Louis, MO 63104
314-454-0222
Certificate of Authority: 001507

REV.