FOR INFORMATION ONLY

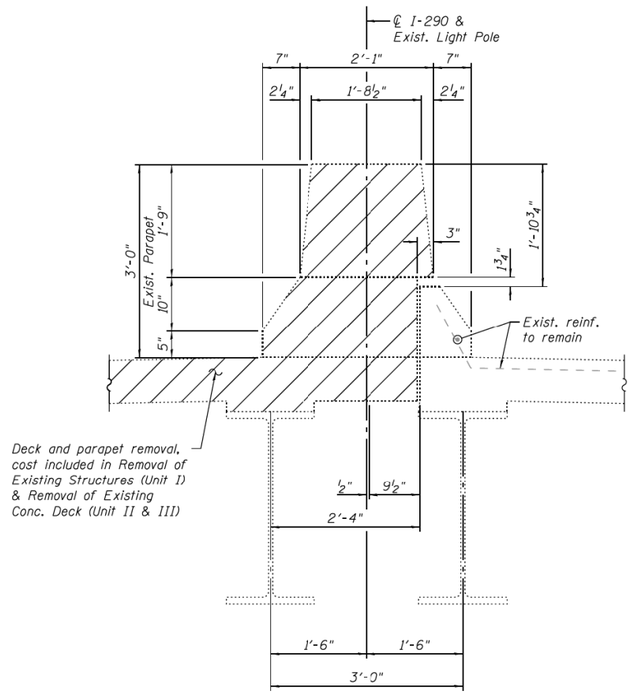

REMOVAL SECTION AT EXISTING LIGHT POLE

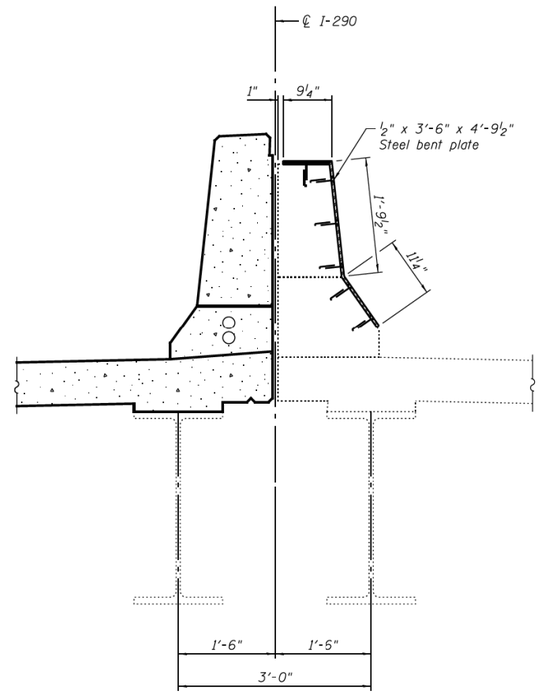

SECTION P-P

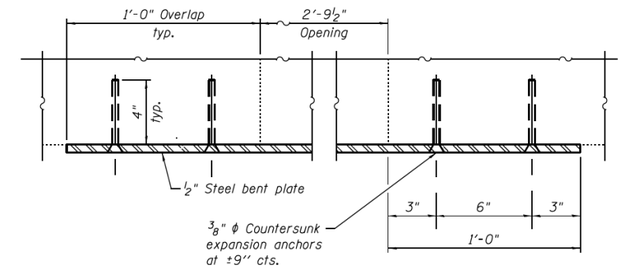

SECTION Q-Q

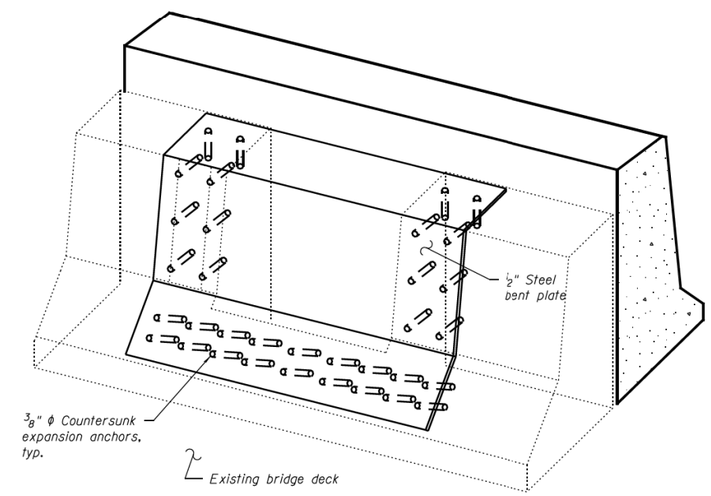

TRIMETRIC VIEW

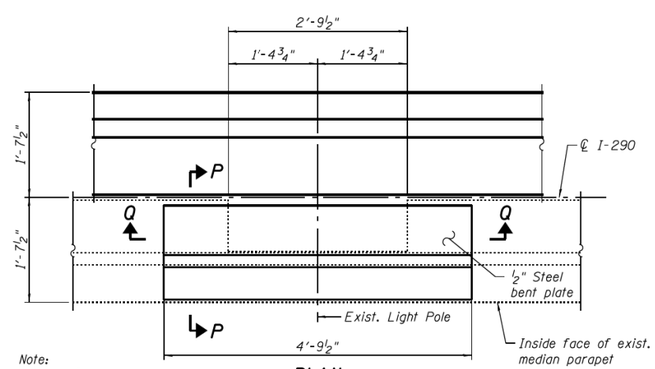

Note:
Cost of steel plate and countersunk expansion anchors is included with Concrete Superstructure.

PLAN

1 location, Unit I
3 locations, Unit II
2 locations, Unit III

PARSONS BRINCKERHOFF	USER NAME = poteld	DESIGNED - PJL	REVISED -	STATE OF ILLINOIS DEPARTMENT OF TRANSPORTATION	DECK DETAILS IV – UNIT III STRUCTURE NO. 016–0461	F.A.I. RTE.	SECTION	COUNTY	TOTAL SHEETS / SHEET NO.
		CHECKED - JZ	REVISED -			90/94/290	2014-004 R&B (WB)	COOK	706 / 339
	PLOT SCALE = N.T.S.	DRAWN - DCP	REVISED -					CONTRACT NO. 60X78	
	PLOT DATE = 3/23/2016	CHECKED - JIG	REVISED -		SHEET NO. S2-62 OF S2-145 SHEETS		ILLINOIS FED. AID PROJECT		

HBM ENGINEERING GROUP, LLC	USER NAME = ahmad.issa	DESIGNED -	REVISED -	STATE OF ILLINOIS DEPARTMENT OF TRANSPORTATION	EXISTING RECORD DRAWINGS	F.A.I. RTE.	SECTION	COUNTY	TOTAL SHEETS / SHEET NO.
		CHECKED -	REVISED -			90/94/290	2014-013R&B-R	COOK	1972 / 1701
	PLOT SCALE = N.T.S	DRAWN -	REVISED -					CONTRACT NO. 60X93	
	PLOT DATE = 7/26/2018	CHECKED - MI, MAI	REVISED -				ILLINOIS FED. AID PROJECT		

FILE NAME: pw:\\617479-PWINT.aecomonline.local:AECOM_DS02_NA\Documents\01 Americas\Transportation\60269938 Circle\Phase_II\000_CAD\008_Structural\Structure_016-1718\Existing Plans\33906-60X93-SXX-Existing123

0160461-60X78-S062-DET.dgn

2:16:38 PM

FOR INFORMATION ONLY

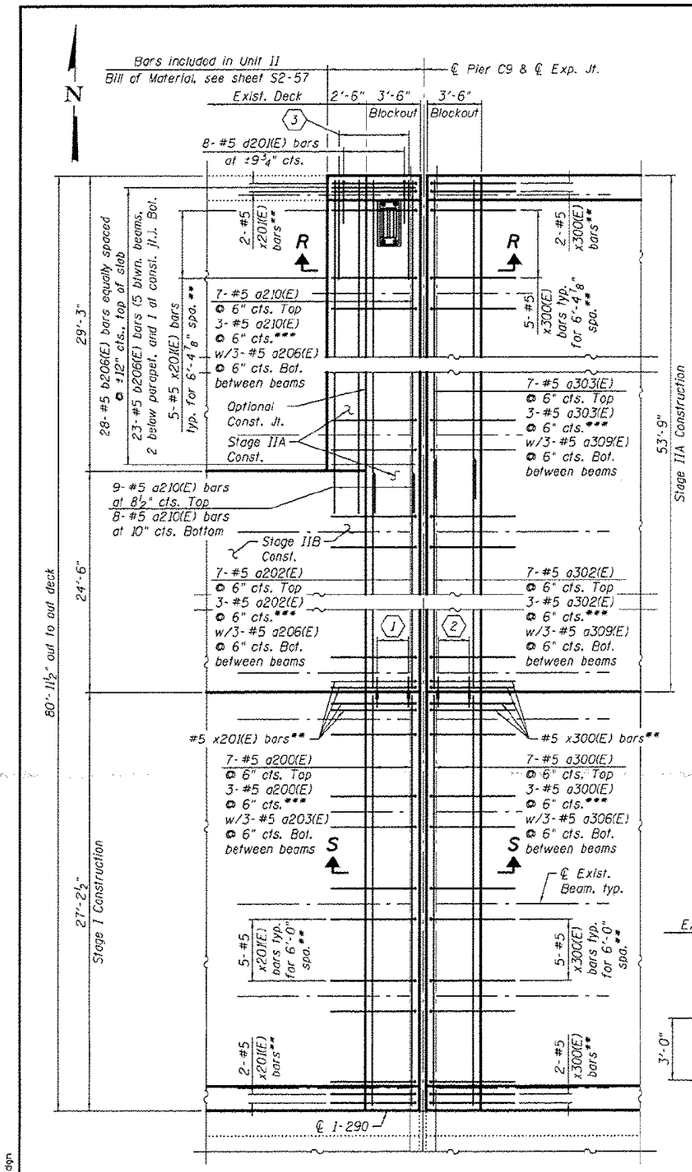

PARTIAL PLAN AT PIER C9

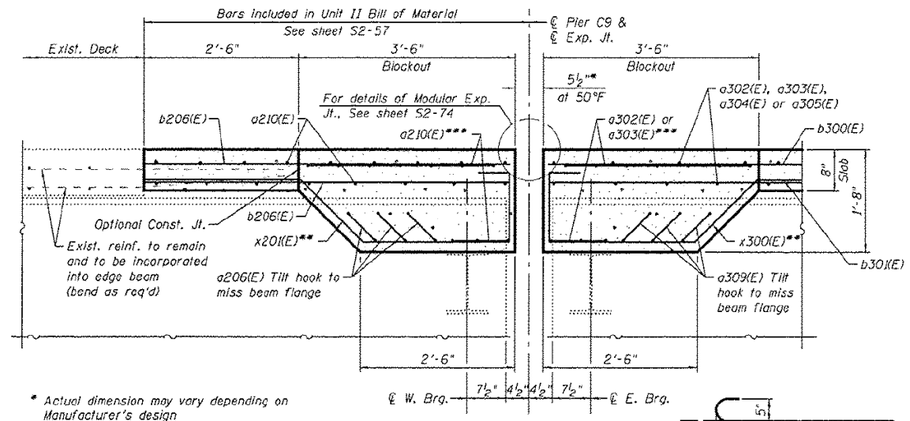

SECTION R-R

* Actual dimension may vary depending on Manufacturer's design

** x201(E) & x300(E) bars to be placed at 12" cts. between beams and adjusted in field to miss support boxes

*** Bars to be adjusted and/or cut in field to miss support boxes and beam webs, as allowed by the Engineer. The Contractor shall reference and coordinate rebar installation with the approved modular joint shop drawings.

(1) 3-#5 a204(E) bars. 3-#5 a205(E) bars & 13-Bar Splicers (E) for #5 a200(E) and a204(E)-a205(E) bars top and bottom

(2) 3-#5 a307(E) bars. 3-#5 a308(E) bars & 13-Bar Splicers (E) for #5 a300(E) and a307(E)-a308(E) bars top and bottom

(3) 9-#6 a201(E) bars at 8½" cts. Top (Lap with b210(E) bar)

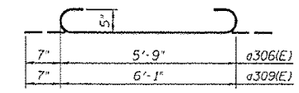

a306(E) or a309(E) BAR

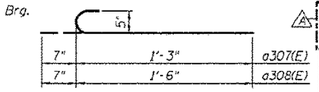

a307(E) or a308(E) BAR

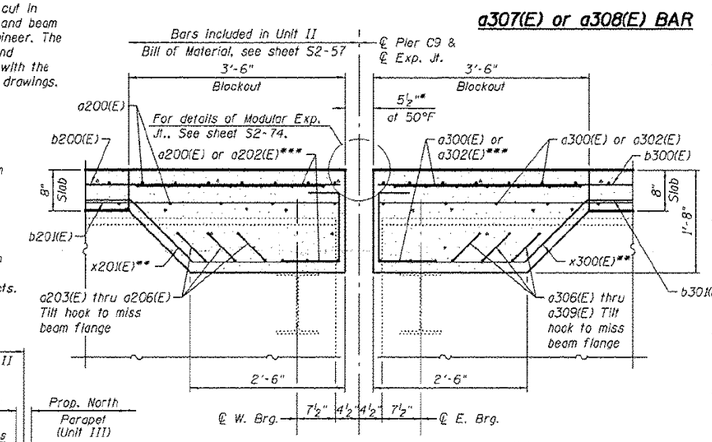

SECTION S-S

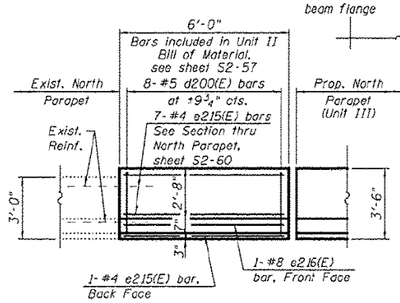

INSIDE ELEVATION OF PARAPET AT EXIST. NORTH PARAPET

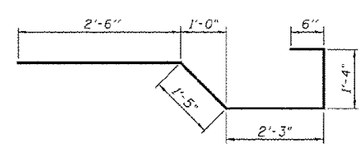

BAR x300(E)

Notes:

1. Existing reinforcement shall be cleaned and incorporated into the new construction. Cost included with Removal of Existing Concrete Deck.
2. Any reinforcement bars that are damaged during concrete removal operations shall be repaired or replaced using an approved bar splicer or anchorage system. Cost incidental to Removal of Existing Concrete Deck.

SUPERSTRUCTURE BILL OF MATERIAL

Bar	No.	Size	Length	Shape
a300(E)	666	#5	26'-9"	
a301(E)	648	#6	6'-6"	
a302(E)	369	#5	24'-11"	
a303(E)	369	#5	31'-0"	
a304(E)	297	#5	30'-0"	
a305(E)	297	#5	25'-11"	
a306(E)	20	#5	6'-11"	
a307(E)	4	#5	1'-10"	
a308(E)	4	#5	2'-1"	
a309(E)	12	#5	7'-3"	
a310(E)	80	#5	2'-0"	
a311(E)	20	#6	7'-2"	
a312(E)	20	#5	8'-1"	
a313(E)	20	#5	6'-3"	
a114(E)	50	#7	10'-1"	
b300(E)	765	#5	30'-1"	
b301(E)	680	#5	27'-3"	
b302(E)	162	#6	32'-0"	
b303(E)	81	#6	17'-11"	
b304(E)	81	#6	25'-1"	
b305(E)	4	#5	2'-3"	
b306(E)	20	#5	16'-7"	
d300(E)	540	#5	6'-11"	
d301(E)	540	#5	6'-2"	
d302(E)	6	#6	5'-1"	
d303(E)	12	#6	8'-11"	
d304(E)	23	#5	3'-3"	
d305(E)	42	#5	3'-2"	
d306(E)	37	#6	4'-10"	
d307(E)	18	#6	6'-4"	
d308(E)	12	#6	22'-6"	
d309(E)	19	#6	5'-8"	
d310(E)	19	#6	6'-1"	
d311(E)	18	#6	11'-1"	
d312(E)	12	#6	13'-4"	
e300(E)	64	#4	16'-6"	
e301(E)	32	#4	10'-9"	
e302(E)	42	#4	18'-0"	
e303(E)	32	#4	12'-5"	
e304(E)	56	#4	18'-11"	
e305(E)	4	#4	17'-9"	
e306(E)	4	#8	19'-4"	
e307(E)	4	#8	10'-9"	
e308(E)	4	#4	28'-4"	
e309(E)	4	#8	29'-11"	
e310(E)	4	#8	12'-5"	
e311(E)	6	#4	26'-11"	
e312(E)	6	#8	29'-0"	
e313(E)	4	#5	2'-3"	
e314(E)	2	#8	16'-6"	
e315(E)	4	#4	7'-0"	
e316(E)	4	#5	16'-6"	
x300(E)	136	#5	7'-6"	
Reinforcement Bars, Epoxy Coated			Pound	137,030
Concrete Superstructure			Cu. Yds.	632.4
Protective Coat			Sq. Yd.	2,380
Bridge Deck Grooving			Sq. Yd.	2,072

PARSONS BRINCKERHOFF	USER NAME = patold	DESIGNED - PJL	REVISED - △5 4/27/2016 JIG	STATE OF ILLINOIS DEPARTMENT OF TRANSPORTATION	DECK DETAILS V – UNIT III STRUCTURE NO. 016-0461
		CHECKED - JZ	REVISED -		
	PLOT SCALE = N.T.S.	DRAWN - DCP	REVISED -		
	PLOT DATE = 5/16/2016	CHECKED - JIG	REVISED -		SHEET NO. S2-63 OF S2-145 SHEETS

F.A.I. RTE.	SECTION	COUNTY	TOTAL SHEETS	SHEET NO.
90/94/290	2014-004 R&B (WB)	COOK	706	340
		CONTRACT NO. 60X78		
		ILLINOIS FED. AID PROJECT		

016-0461-60X78-S063-DE1.dgn

FILE NAME: pw:\\617479-PWINT.aecomonline.local\AECOM_DS02_NA\Documents\01 Americas\Transportation\60269938 Circle\Phase_II\000_CAD\008_Structural\Structural\Structure_016-1718\Existing Plans\33906-60X93-SXX-Existing124

HBM ENGINEERING GROUP, LLC	USER NAME = ahmad.issa	DESIGNED -	REVISED -	STATE OF ILLINOIS DEPARTMENT OF TRANSPORTATION	EXISTING RECORD DRAWINGS
		CHECKED -	REVISED -		
	PLOT SCALE = N.T.S	DRAWN -	REVISED -		
	PLOT DATE = 7/26/2018	CHECKED - MI, MAI	REVISED -		

F.A.I. RTE.	SECTION	COUNTY	TOTAL SHEETS	SHEET NO.
90/94/290	2014-013R&B-R	COOK	1972	1702
		CONTRACT NO. 60X93		
		ILLINOIS FED. AID PROJECT		

2:16:47 PM

FOR INFORMATION ONLY

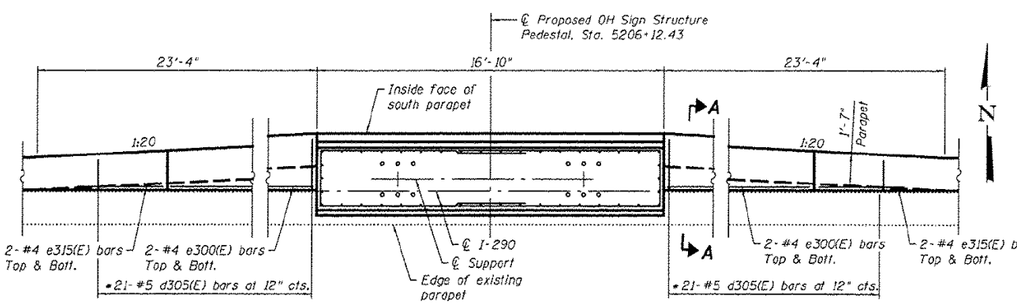

*Cut to fit in field

MEDIAN SOUTH PARAPET PARTIAL PLAN

Notes:
1. See sheet S2-57A, for Anchor Bolt detail, Positioning plate and Section A-A.
2. For sign structure, see Civil Plans.

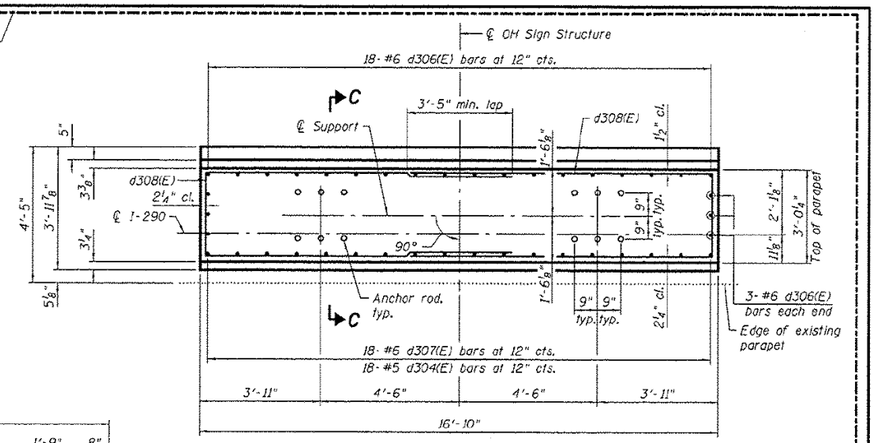

OH SIGN STRUCTURE PEDESTAL PLAN SOUTH PARAPET

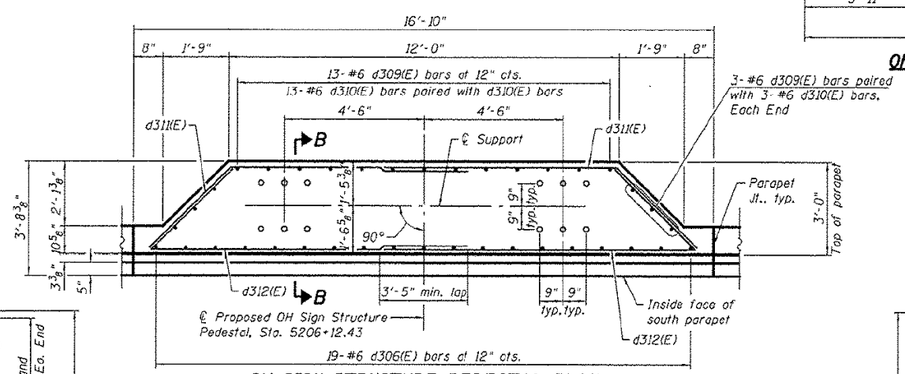

OH SIGN STRUCTURE PEDESTAL PLAN NORTH PARAPET

(Looking North)

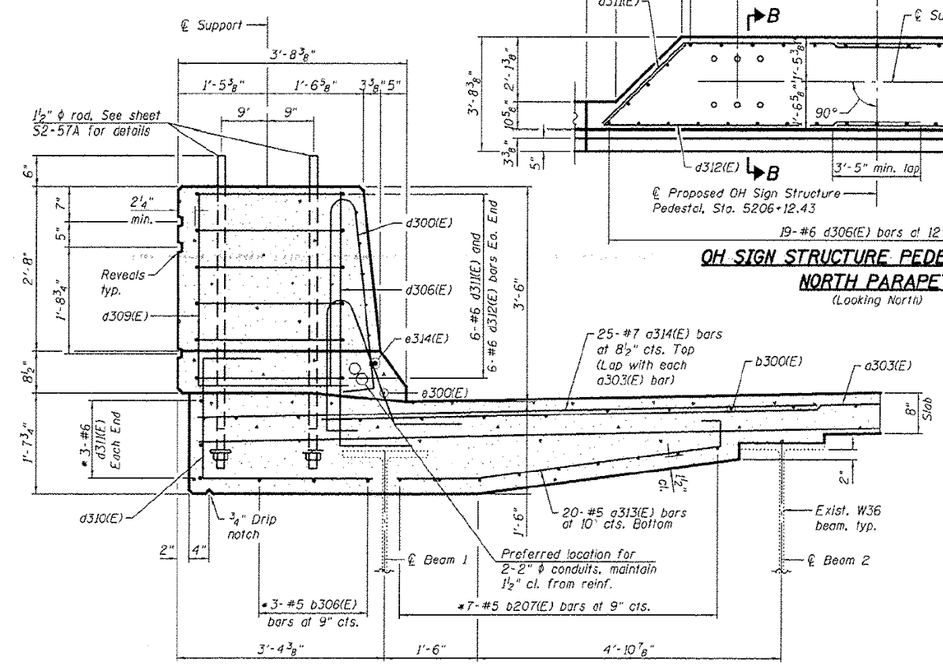

SECTION B-B

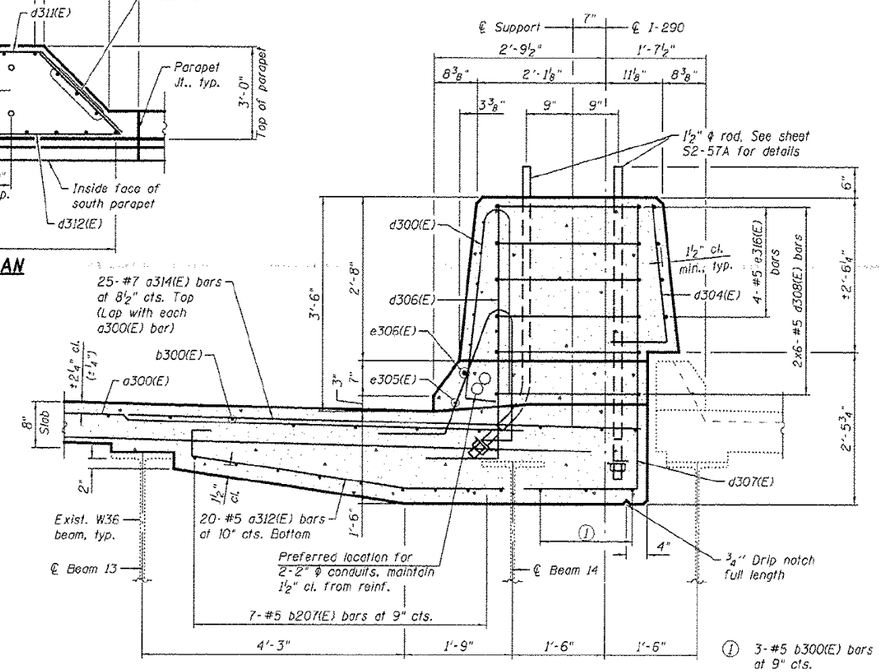

SECTION C-C

PARSONS BRINCKERHOFF	USER NAME = pateld	DESIGNED - ---	REVISED - 4/27/2016 JIG	STATE OF ILLINOIS DEPARTMENT OF TRANSPORTATION	DECK DETAILS VI – UNIT III STRUCTURE NO. 016-0461	F.A.I. RTE.	SECTION	COUNTY	TOTAL SHEETS / SHEET NO.
		CHECKED - ---	REVISED -			90/94/290	2014-004 R&B (WB)	COOK	706 / 340A
	PLOT SCALE = N.T.S.	DRAWN - JIG	REVISED -					CONTRACT NO. 60X78	
	PLOT DATE = 5/16/2016	CHECKED - JIG	REVISED -		SHEET NO. S2-63A OF S2-145 SHEETS			ILLINOIS FED. AID PROJECT	

0160461-S0X78-S063A-IDET.dgn

HBM ENGINEERING GROUP, LLC	USER NAME = ahmad.issa	DESIGNED -	REVISED -	STATE OF ILLINOIS DEPARTMENT OF TRANSPORTATION	EXISTING RECORD DRAWINGS	F.A.I. RTE.	SECTION	COUNTY	TOTAL SHEETS / SHEET NO.
		CHECKED -	REVISED -			90/94/290	2014-013R&B-R	COOK	1972 / 1703
	PLOT SCALE = N.T.S	DRAWN -	REVISED -					CONTRACT NO. 60X93	
	PLOT DATE = 7/26/2018	CHECKED - MI. MAI	REVISED -					ILLINOIS FED. AID PROJECT	

FILE NAME: pw:\\617479-PWINT.aecomonline.local:AECOM_DS02_NA\Documents\01 Americas\Transportation\60269938 Circle\Phase_II\000_CAD\008_Structural\Structure_016-1718\Existing Plans\33906-60X93-SXX-Existing125

2:16:54 PM

FOR INFORMATION ONLY

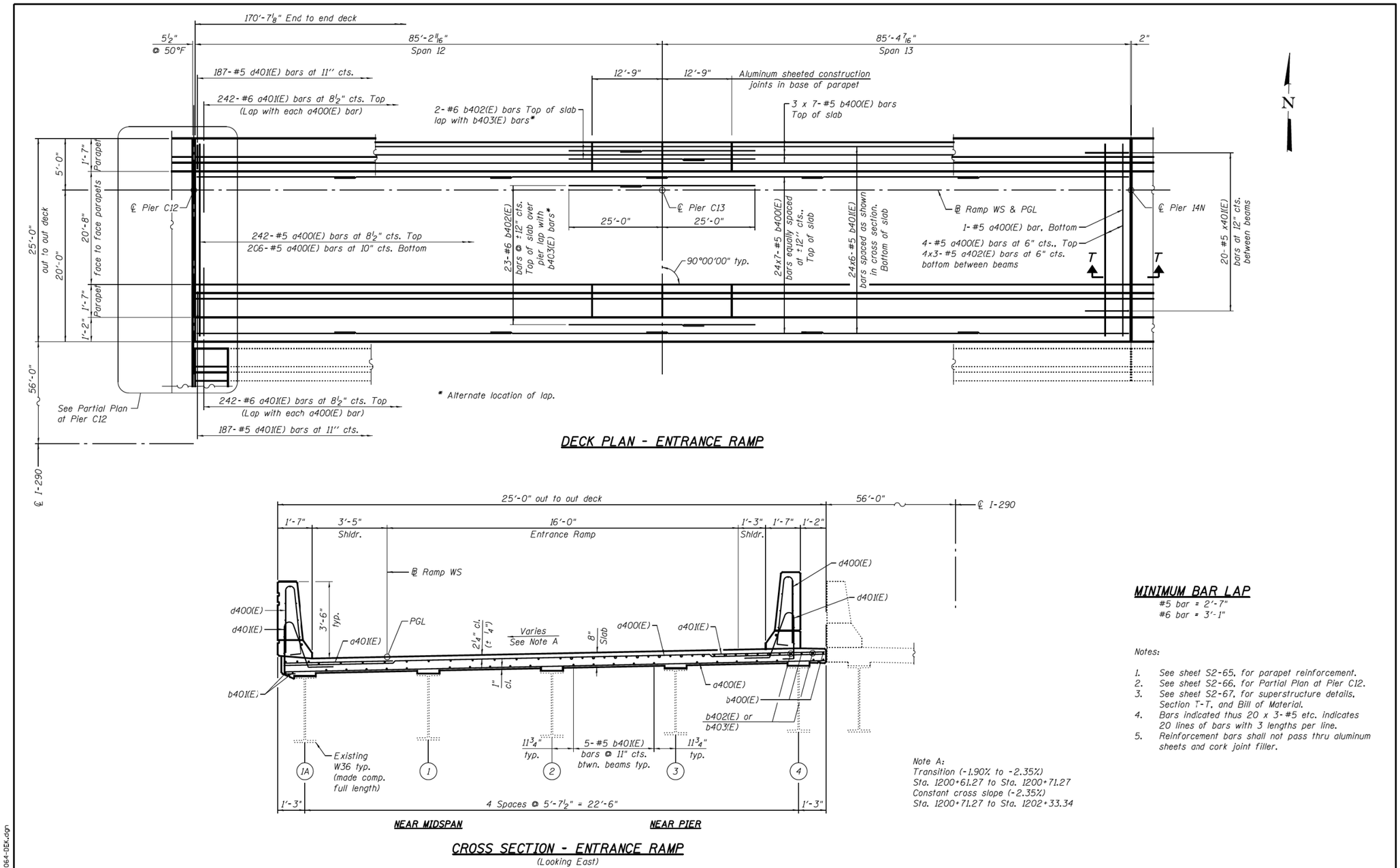

DECK PLAN - ENTRANCE RAMP

CROSS SECTION - ENTRANCE RAMP

(Looking East)

Note A:
Transition (-1.90% to -2.35%)
Sta. 1200+61.27 to Sta. 1200+71.27
Constant cross slope (-2.35%)
Sta. 1200+71.27 to Sta. 1202+33.34

MINIMUM BAR LAP

#5 bar = 2'-7"
#6 bar = 3'-1"

Notes:

1. See sheet S2-65, for parapet reinforcement.
2. See sheet S2-66, for Partial Plan at Pier C12.
3. See sheet S2-67, for superstructure details, Section T-T, and Bill of Material.
4. Bars indicated thus 20 x 3-#5 etc. indicates 20 lines of bars with 3 lengths per line.
5. Reinforcement bars shall not pass thru aluminum sheets and cork joint filler.

0160461-60X78-S064-DEK.dgn

PARSONS BRINCKERHOFF	USER NAME = poteld	DESIGNED - PJL	REVISED -	STATE OF ILLINOIS DEPARTMENT OF TRANSPORTATION	DECK PLAN ENTRANCE RAMP STRUCTURE NO. 016-0461	F.A.I. RTE.	SECTION	COUNTY	TOTAL SHEETS	SHEET NO.
		CHECKED - JZ	REVISED -			90/94/290	2014-004 R&B (WB)	COOK	706	341
	PLOT SCALE = N.T.S.	DRAWN - DCP	REVISED -					CONTRACT NO. 60X78		
	PLOT DATE = 3/23/2016	CHECKED - JIG	REVISED -		SHEET NO. S2-64 OF S2-145 SHEETS			ILLINOIS FED. AID PROJECT		

HBM ENGINEERING GROUP, LLC	USER NAME = ahmad.issa	DESIGNED -	REVISED -	STATE OF ILLINOIS DEPARTMENT OF TRANSPORTATION	EXISTING RECORD DRAWINGS	F.A.I. RTE.	SECTION	COUNTY	TOTAL SHEETS	SHEET NO.
		CHECKED -	REVISED -			90/94/290	2014-013R&B-R	COOK	1972	1704
	PLOT SCALE = N.T.S	DRAWN -	REVISED -					CONTRACT NO. 60X93		
	PLOT DATE = 7/26/2018	CHECKED - MI, MAI	REVISED -					ILLINOIS FED. AID PROJECT		

FILE NAME: pw:\\617479-PWINT.aecomonline.local:AECOM_DS02_NA\Documents\01 Americas\Transportation\60269938 Circle\Phase_II\000_CAD\008_Structural\Structure_016-1718\Existing Plans\33906-60X93-SXX-Existing126

2:17:02 PM

FOR INFORMATION ONLY

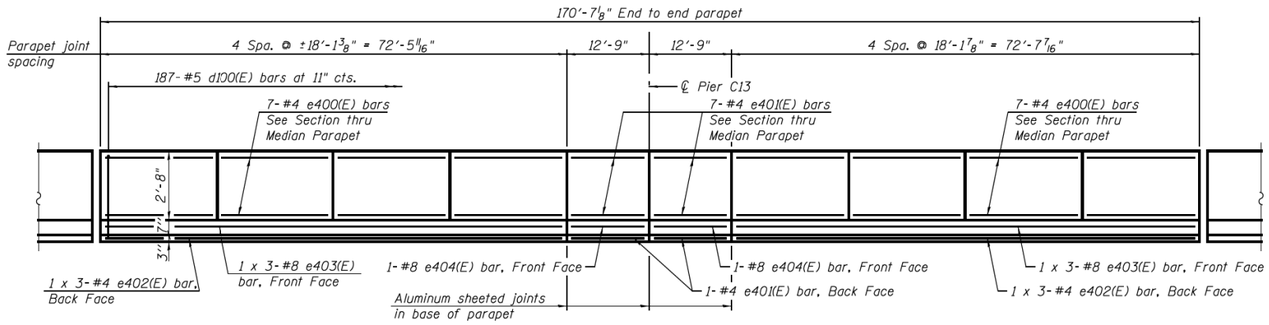

INSIDE ELEVATION OF PARAPET

(North Parapet Shown, South Parapet similar but opposite hand)

MINIMUM BAR LAP

(Parapet)
#4 bar = 2'-0"
#8 bar = 5'-2"

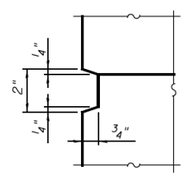

REVEAL DETAIL

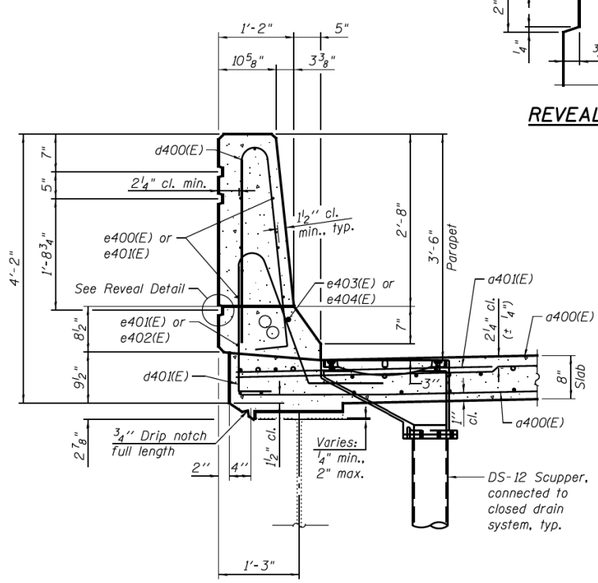

SECTION THRU NORTH PARAPET

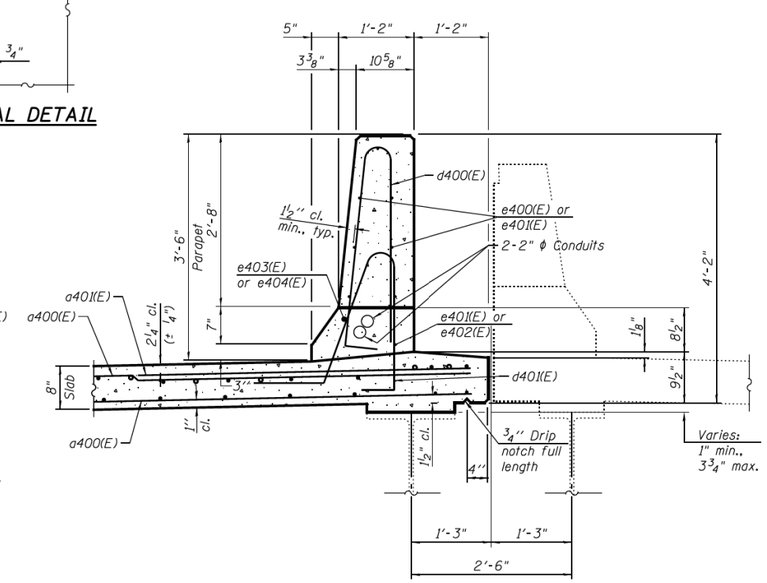

SECTION THRU SOUTH PARAPET

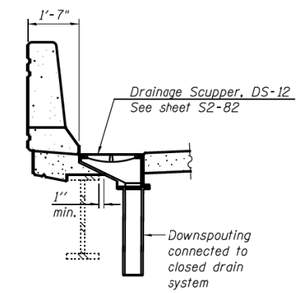

SECTION U-U

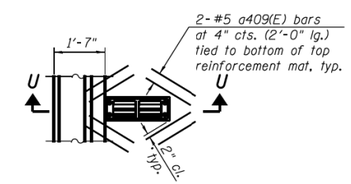

PLAN

Note:
Reinforcement bars designated (E) shall be epoxy coated.
Cut longitudinal reinforcement to clear drainage scuppers.

0160461-60X78-S065-DET.dgn

PARSONS BRINCKERHOFF	USER NAME = poteld	DESIGNED - PJL	REVISED -	STATE OF ILLINOIS DEPARTMENT OF TRANSPORTATION	DECK DETAILS I– ENTRANCE RAMP STRUCTURE NO. 016–0461	F.A.I. RTE.	SECTION	COUNTY	TOTAL SHEETS	SHEET NO.
		CHECKED - JZ	REVISED -			90/94/290	2014-004 R&B (WB)	COOK	706	342
	PLOT SCALE = N.T.S.	DRAWN - DCP	REVISED -					CONTRACT NO. 60X78		
	PLOT DATE = 3/23/2016	CHECKED - JIG	REVISED -		SHEET NO. S2-65 OF S2-145 SHEETS		ILLINOIS FED. AID PROJECT			

HBM ENGINEERING GROUP, LLC	USER NAME = ahmad.issa	DESIGNED -	REVISED -	STATE OF ILLINOIS DEPARTMENT OF TRANSPORTATION	EXISTING RECORD DRAWINGS	F.A.I. RTE.	SECTION	COUNTY	TOTAL SHEETS	SHEET NO.
		CHECKED -	REVISED -			90/94/290	2014-013R&B-R	COOK	1972	1705
	PLOT SCALE = N.T.S	DRAWN -	REVISED -					CONTRACT NO. 60X93		
	PLOT DATE = 7/26/2018	CHECKED - MI, MAI	REVISED -				ILLINOIS FED. AID PROJECT			

FILE NAME: pw:\\617479-PWINT.aecomonline.local:AECOM_DS02_NA\Documents\01 Americas\Transportation\60269938 Circle\Phase_II\000_CAD\008_Structural\Structure_016-1718\Existing Plans\33906-60X93-SXX-Existing127

2:17:24 PM

FOR INFORMATION ONLY

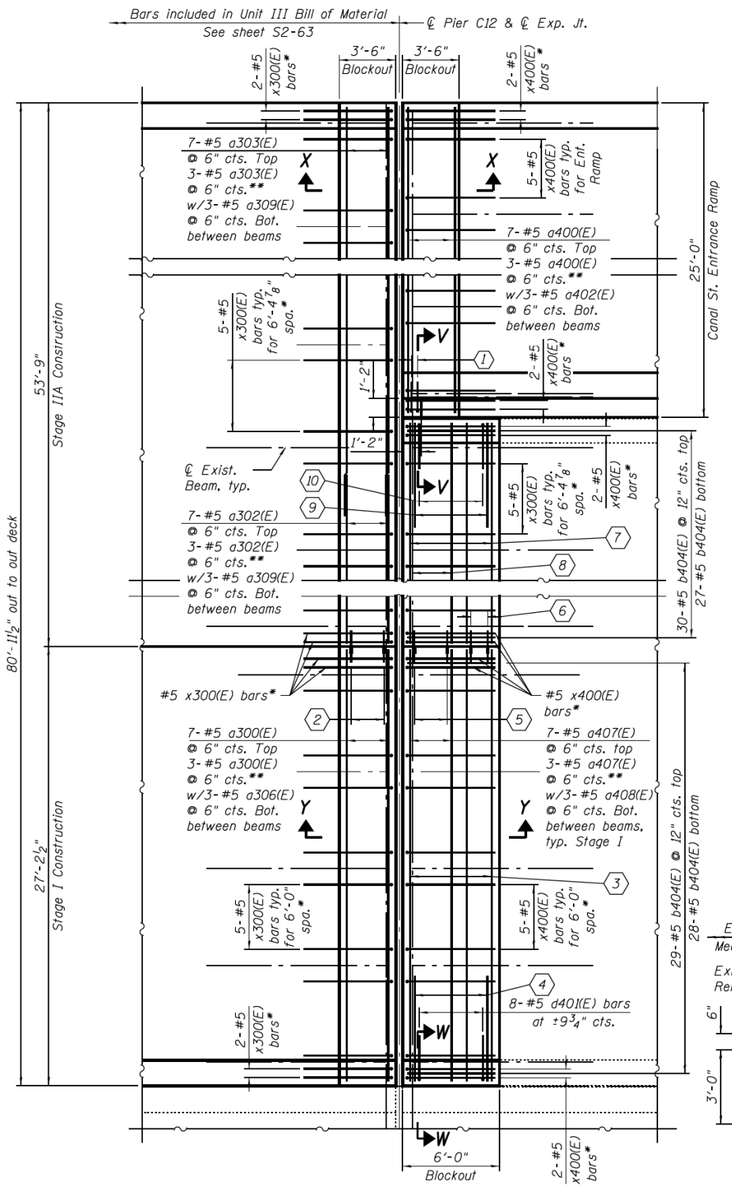

PARTIAL PLAN AT PIER C12

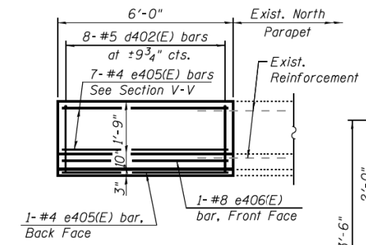

INSIDE ELEVATION OF PARAPET AT EXIST. NORTH PARAPET

* x300(E) and x400(E) bars to be placed at 12" cts. between beams and adjusted in field to miss support boxes

** Bars to be adjusted and/or cut in field to miss support boxes and beam webs, as allowed by the Engineer. The Contractor shall reference and coordinate rebar installation with the approved modular joint shop drawings.

1. 2-Pairs #5 d407(E) bars at 11" cts.
2. 3-#5 a307(E) bars, 3-#5 a308(E) bars & 13-Bar Splicers (E) for #5 a300(E) and a307(E)-a308(E) bars top and bottom
3. 9-#5 a407(E) bars @ 8 1/2" cts. 8-#5 a407(E) bars @ 10" cts.
4. 9-#6 a401(E) bars @ 8 1/2" cts. Top (Lap with each a407(E) bar)
5. 3-#5 a405(E) bars, 3-#5 a406(E) bars & 13-Bar Splicers (E) for #5 a407(E) and a405(E)-a406(E) bars top and bottom
6. 17-Bar Splicers (E) for #5 a407(E) bars top and bottom
7. 9-#5 a403(E) bars @ 8 1/2" cts. top 8-#5 a403(E) bars at 10" cts. bottom
8. 7-#5 a403(E) bars @ 6" cts. top 3-#5 a403(E) bars @ 6" cts. w/3-#5 a404(E) bars @ 6" cts.** Bottom between beams, typ. Stage IIA
9. 9-#6 a401(E) bars @ 8 1/2" cts. Top (Lap with each a403(E) bar)
10. 8-#5 d403(E) bars @ ±9 3/4" cts.
11. 1-#5 d404(E) bar, 1-#5 d405(E) bar, & 1-d406(E) bar @ ±9 3/4" cts.

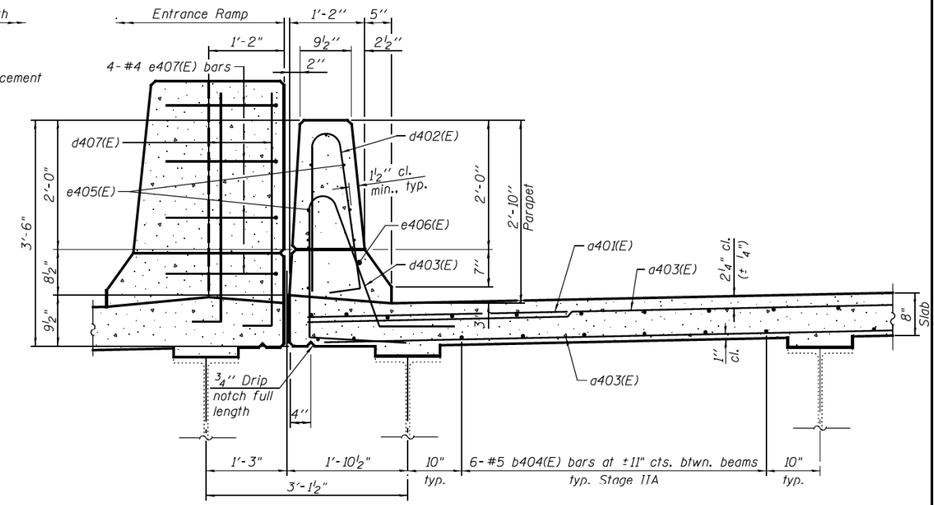

SECTION V-V

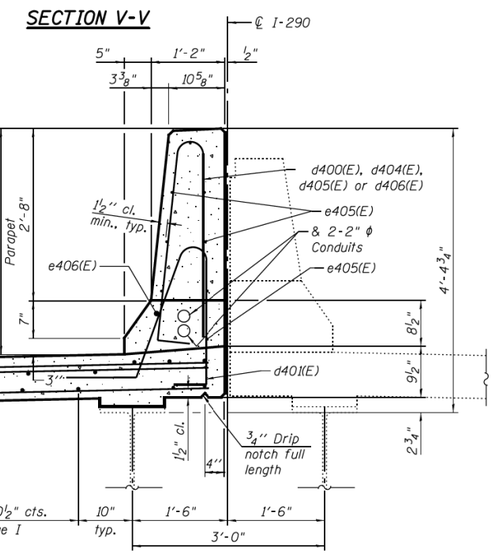

SECTION W-W

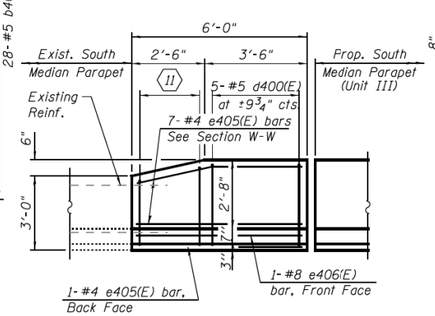

INSIDE ELEVATION OF PARAPET AT EXIST. SOUTH MEDIAN PARAPET

Notes:

1. See sheet S2-67, for superstructure details and Bill of Material.
2. Existing reinforcement shall be cleaned and incorporated into the new construction. Cost included with Removal of Existing Concrete Deck.
3. Any reinforcement bars that are damaged during concrete removal operations shall be repaired or replaced using an approved bar splicer or anchorage system. Cost incidental to Removal of Existing Concrete Deck.

0160461-60X78-S066-DET.dgn

PARSONS BRINCKERHOFF	USER NAME = poteld	DESIGNED - PJL	REVISED -	STATE OF ILLINOIS DEPARTMENT OF TRANSPORTATION	DECK DETAILS II – ENTRANCE RAMP STRUCTURE NO. 016-0461	F.A.I. RTE.	SECTION	COUNTY	TOTAL SHEETS	SHEET NO.
		CHECKED - JZ	REVISED -			90/94/290	2014-004 R&B (WB)	COOK	706	343
	PLOT SCALE = N.T.S.	DRAWN - DCP	REVISED -					CONTRACT NO. 60X78		
	PLOT DATE = 3/23/2016	CHECKED - JIG	REVISED -		SHEET NO. S2-66 OF S2-145 SHEETS			ILLINOIS FED. AID PROJECT		

HBM ENGINEERING GROUP, LLC	USER NAME = ahmad.issa	DESIGNED -	REVISED -	STATE OF ILLINOIS DEPARTMENT OF TRANSPORTATION	EXISTING RECORD DRAWINGS	F.A.I. RTE.	SECTION	COUNTY	TOTAL SHEETS	SHEET NO.
		CHECKED -	REVISED -			90/94/290	2014-013R&B-R	COOK	1972	1706
	PLOT SCALE = N.T.S	DRAWN -	REVISED -					CONTRACT NO. 60X93		
	PLOT DATE = 7/26/2018	CHECKED - MI. MAI	REVISED -					ILLINOIS FED. AID PROJECT		

FILE NAME: pw:\\617479-PWINT.aecomonline.local\AECOM_DS02_NA\Documents\01 Americas\Transportation\60269938 Circle\Phase_II\000_CAD\008_Structural\Structure_016-1718\Existing Plans\33906-60X93-SXX-Existing128

2:17:33 PM

FOR INFORMATION ONLY

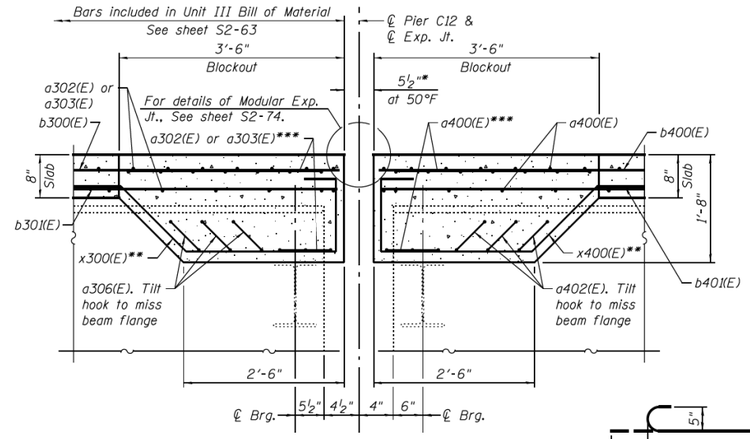

SECTION X-X

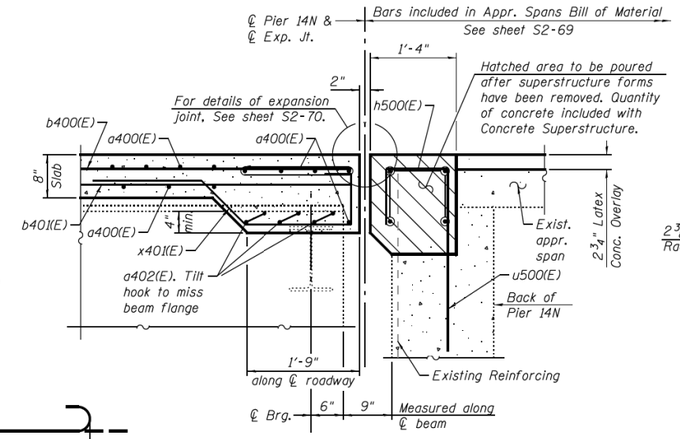

SECTION T-T

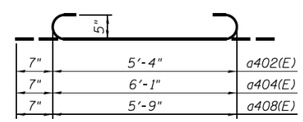

a402(E), a404(E) or a408(E) BAR

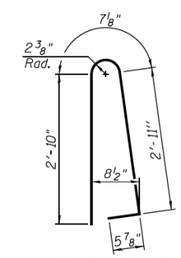

BAR d400(E)

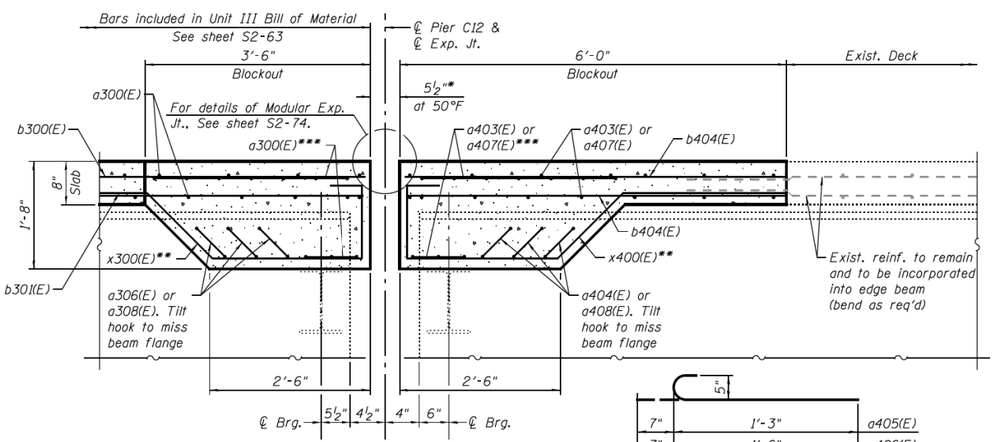

SECTION Y-Y

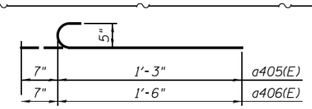

a405(E) or a406(E) BAR

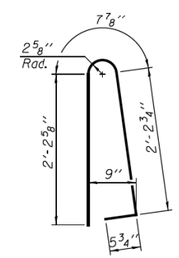

BAR d402(E)

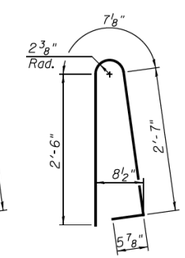

BAR d405(E)

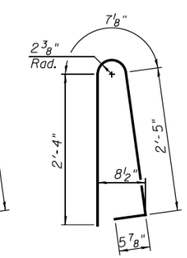

BAR d404(E)

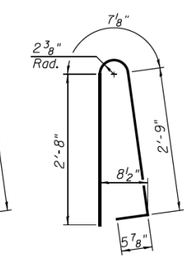

BAR d406(E)

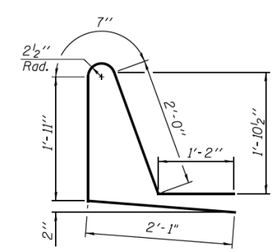

BAR d403(E)

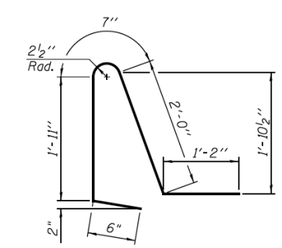

BAR d401(E)

SUPERSTRUCTURE BILL OF MATERIAL

Bar	No.	Size	Length	Shape
a400(E)	463	#5	24'-7"	
a401(E)	502	#6	6'-6"	
a402(E)	24	#5	6'-6"	
a403(E)	27	#5	28'-5"	
a404(E)	12	#5	7'-3"	
a405(E)	3	#5	1'-10"	
a406(E)	3	#5	2'-1"	
a407(E)	27	#5	26'-11"	
a408(E)	12	#5	6'-11"	
a409(E)	16	#5	2'-0"	
b400(E)	189	#5	26'-7"	
b401(E)	144	#5	30'-7"	
b402(E)	25	#6	32'-0"	
b403(E)	25	#6	21'-1"	
b404(E)	114	#5	5'-8"	
d400(E)	379	#5	6'-10"	
d401(E)	382	#5	6'-2"	
d402(E)	8	#5	5'-7"	
d403(E)	8	#5	7'-9"	
d404(E)	1	#5	5'-10"	
d405(E)	1	#5	6'-2"	
d406(E)	1	#5	6'-6"	
d407(E)	4	#5	4'-5"	
e400(E)	112	#4	17'-10"	
e401(E)	32	#4	12'-6"	
e402(E)	12	#4	25'-6"	
e403(E)	12	#8	27'-7"	
e404(E)	4	#8	12'-6"	
e405(E)	16	#4	5'-9"	
e406(E)	2	#8	5'-9"	
e407(E)	4	#4	4'-4"	
x400(E)	72	#5	7'-6"	
x401(E)	20	#5	6'-5"	
Reinforcement Bars, Epoxy Coated			Pound	40,150
Concrete Superstructure			Cu. Yds.	200.7
Protective Coat			Sq. Yd.	608
Bridge Deck Grooving			Sq. Yd.	387

Notes:

1. Existing reinforcement shall be cleaned and incorporated into the new construction. Cost included with Removal of Existing Concrete Deck.
2. Any reinforcement bars that are damaged during concrete removal operations shall be repaired or replaced using an approved bar splicer or anchorage system. Cost incidental to Removal of Existing Concrete Deck.

* Actual dimension may vary depending on Manufacturer's design

** x300(E) and x400(E) bars to be placed at 12" cts. between beams and adjusted in field to miss support boxes

*** Bars to be adjusted and/or cut in field to miss support boxes and beam webs, as allowed by the Engineer. The Contractor shall reference and coordinate rebar installation with the approved modular joint shop drawings.

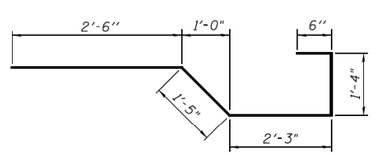

BAR x400(E)

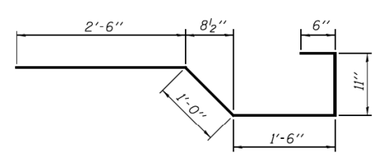

BAR x401(E)

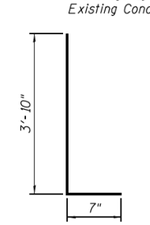

BAR d407(E)

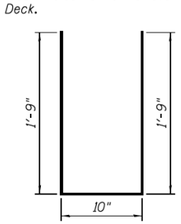

BAR e407(E)

PARSONS BRINCKERHOFF	USER NAME = poteld	DESIGNED - PJL	REVISED -	STATE OF ILLINOIS DEPARTMENT OF TRANSPORTATION	DECK DETAILS III – ENTRANCE RAMP STRUCTURE NO. 016-0461	F.A.I. RTE.	SECTION	COUNTY	TOTAL SHEETS	SHEET NO.
		CHECKED - JZ	REVISED -			90/94/290	2014-004 R&B (WB)	COOK	706	344
	PLOT SCALE = N.T.S.	DRAWN - DCP	REVISED -					CONTRACT NO. 60X78		
	PLOT DATE = 3/23/2016	CHECKED - JIG	REVISED -		SHEET NO. S2-67 OF S2-145 SHEETS			ILLINOIS FED. AID PROJECT		

0160461-60X78-S067-DET.dgn

HBM ENGINEERING GROUP, LLC	USER NAME = ahmad.issa	DESIGNED -	REVISED -	STATE OF ILLINOIS DEPARTMENT OF TRANSPORTATION	EXISTING RECORD DRAWINGS	F.A.I. RTE.	SECTION	COUNTY	TOTAL SHEETS	SHEET NO.
		CHECKED -	REVISED -			90/94/290	2014-013R&B-R	COOK	1972	1707
	PLOT SCALE = N.T.S	DRAWN -	REVISED -					CONTRACT NO. 60X93		
	PLOT DATE = 7/26/2018	CHECKED - MI, MAI	REVISED -					ILLINOIS FED. AID PROJECT		

FILE NAME: pw:\\617479-PWINT.aecomonline.local:AECOM_DS02_NA\Documents\01 Americas\Transportation\60269938 Circle\Phase_II\000_CAD\008_Structural\Structure_016-1718\Existing Plans\33906-60X93-SXX-Existing129

2:17:43 PM

FOR INFORMATION ONLY

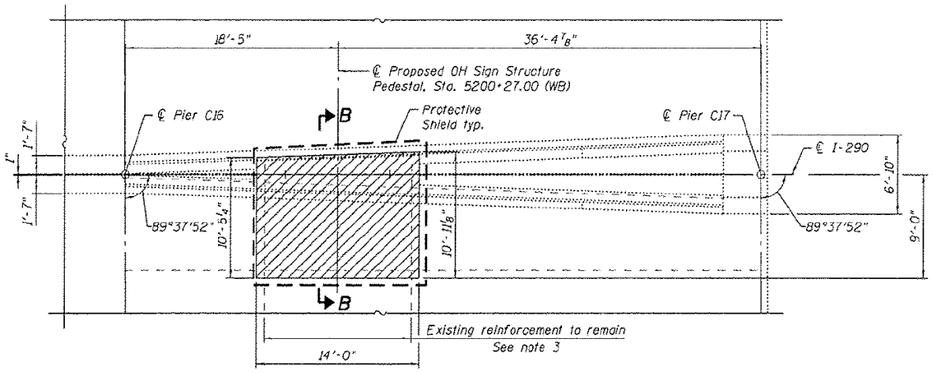

REMOVAL PLAN

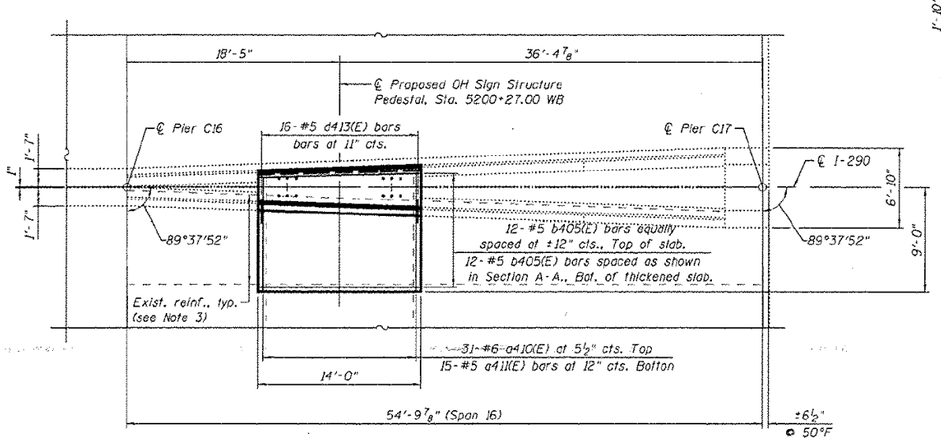

DECK PLAN

BILL OF MATERIAL

Item	Unit	Quantity
Concrete Removal	Cu. Yd.	8.3
Protective Shield	Sq. Yd.	32

Notes:

1. See sheet S2-67B. for Section A-A. superstructure details and Bill of Material.
2. For sign structure, see Civil Plans.
3. Existing reinforcement shall be cleaned and incorporated into the new construction. Cost included with Removal of Existing Concrete Deck. Any existing reinforcement bars that are damaged during concrete removal operations shall be repaired or replaced using an approved bar splicer or anchorage system. Cost included in the cost of Removal of Existing Concrete Deck.

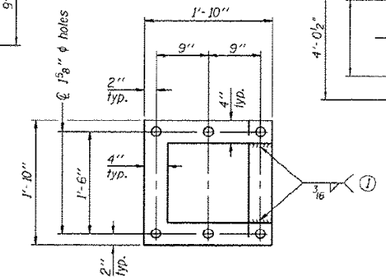

POSITIONING PLATE(S)

1 Optionally may use four (4) separate bars. Weld to maintain perpendicularity.

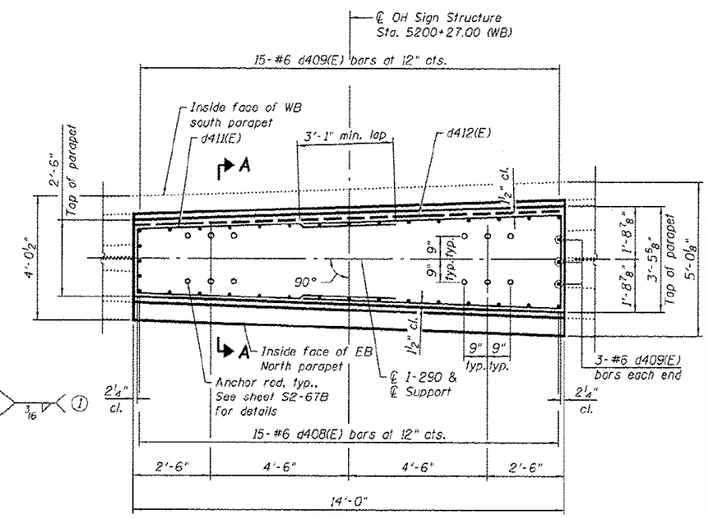

OH SIGN STRUCTURE PEDESTAL PLAN

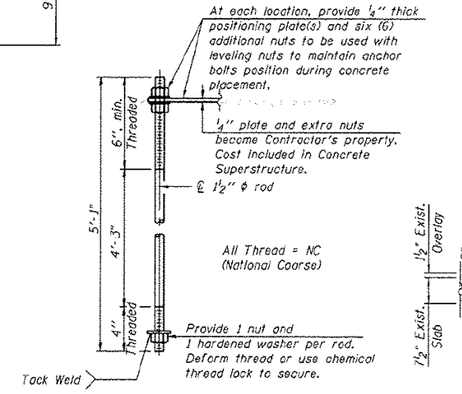

ANCHOR ROD DETAIL

(12 Straight Rods Req'd)

Anchor rods shall conform to ASTM F1554 Grade 105 Galvanize upper 12" minimum per AASHTO M232. No welding shall be permitted on rods.

Cost included with Concrete Superstructure.

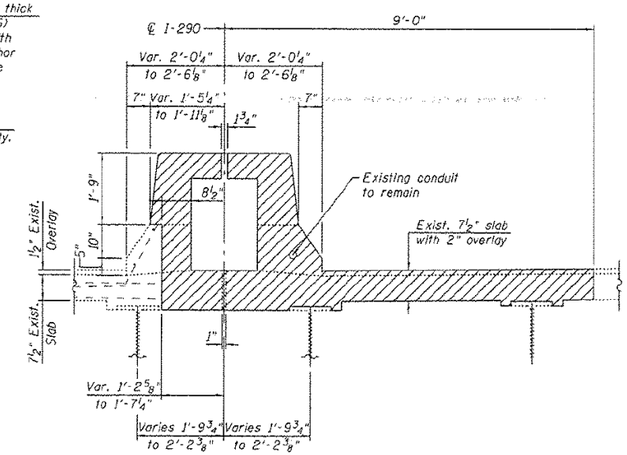

SECTION B-B

PARSONS BRINCKERHOFF	USER NAME = patald	DESIGNED - ILJ	REVISED - 4/27/2016 JIG	STATE OF ILLINOIS DEPARTMENT OF TRANSPORTATION	DECK PLAN – UNIT IV STRUCTURE NO. 016-0461	F.A.I. RTE.	SECTION	COUNTY	TOTAL SHEETS	SHEET NO.
		CHECKED - JIG	REVISED -			90/94/290	2014-004 R&B (WB)	COOK	706	344A
	PLOT SCALE = N.T.S.	DRAWN - DCP	REVISED -					CONTRACT NO. 60X78		
	PLOT DATE = 5/16/2016	CHECKED - JIG	REVISED -		SHEET NO. S2-67A OF S2-145 SHEETS			ILLINOIS FED. AID PROJECT		

HBM ENGINEERING GROUP, LLC	USER NAME = ahmad.issa	DESIGNED -	REVISED -	STATE OF ILLINOIS DEPARTMENT OF TRANSPORTATION	EXISTING RECORD DRAWINGS	F.A.I. RTE.	SECTION	COUNTY	TOTAL SHEETS	SHEET NO.
		CHECKED -	REVISED -			90/94/290	2014-013R&B-R	COOK	1972	1708
	PLOT SCALE = N.T.S	DRAWN -	REVISED -					CONTRACT NO. 60X93		
	PLOT DATE = 7/26/2018	CHECKED - MI, MAI	REVISED -					ILLINOIS FED. AID PROJECT		

FILE NAME: pw:\\617479-PWINT.aecomonline.local:AECOM_DS02_NA\Documents\01 Americas\Transportation\60269938 Circle\Phase_II\000_CAD\008_Structural\Structure_016-1718\Existing Plans\33906-60X93-SXX-Existing130

0160461-60X78-S067A-GET.dgn

2:17:52 PM

FOR INFORMATION ONLY

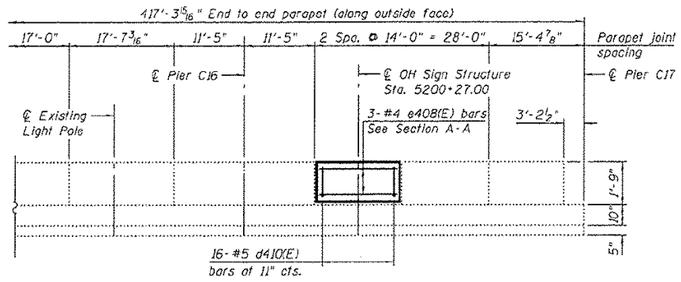

INSIDE ELEVATION OF WB MEDIAN SOUTH PARAPET

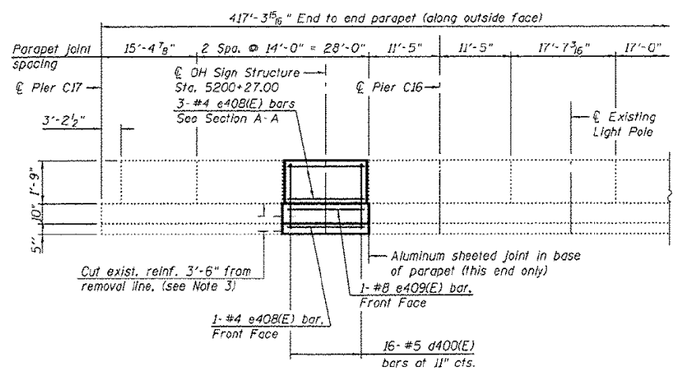

INSIDE ELEVATION OF EB MEDIAN NORTH PARAPET

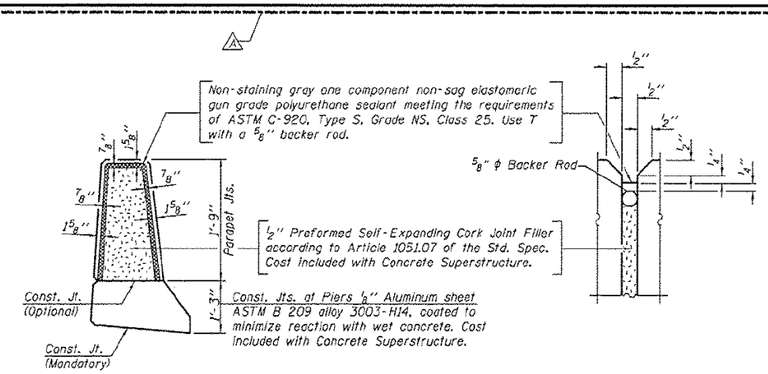

PARAPET JOINT DETAILS

SUPERSTRUCTURE BILL OF MATERIAL

Bar	No.	Size	Length	Shape
a410(E)	31	#7	10'-1"	
a411(E)	15	#5	6'-1"	
b405(E)	24	#5	13'-9"	
d408(E)	15	#6	3'-10"	
d409(E)	21	#6	7'-9"	
d410(E)	15	#5	2'-4"	
d411(E)	5	#5	18'-10"	
d412(E)	5	#5	19'-8"	
d413(E)	15	#6	4'-7"	
e408(E)	7	#4	13'-8"	
e409(E)	1	#8	13'-8"	
Reinforcement Bars, Epoxy Coated			Pound	1,860
Concrete Superstructure			Cu. Yds.	14.0
Protective Coat			Sq. Yd.	12
Bridge Deck Grooving			Sq. Yd.	9

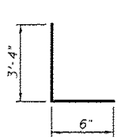

BAR d408(E)

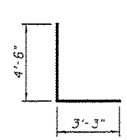

BAR d409(E)

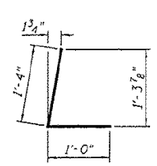

BAR d410(E)

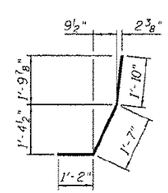

BAR d413(E)

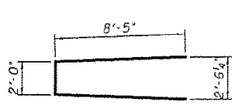

BAR d411(E)

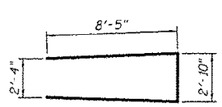

BAR d412(E)

Notes:
1. See sheet S2-67A, for Anchor Bolt detail, Positioning plate.
2. For sign structure, see Civil Plans.
3. Existing reinforcement shall be cleaned and incorporated into the new construction. Cost included with Removal of Existing Concrete Deck. Any existing reinforcement bars that are damaged during concrete removal operations shall be repaired or replaced using an approved bar splicer or anchorage system. Cost included in the cost of Removal of Existing Concrete Deck.

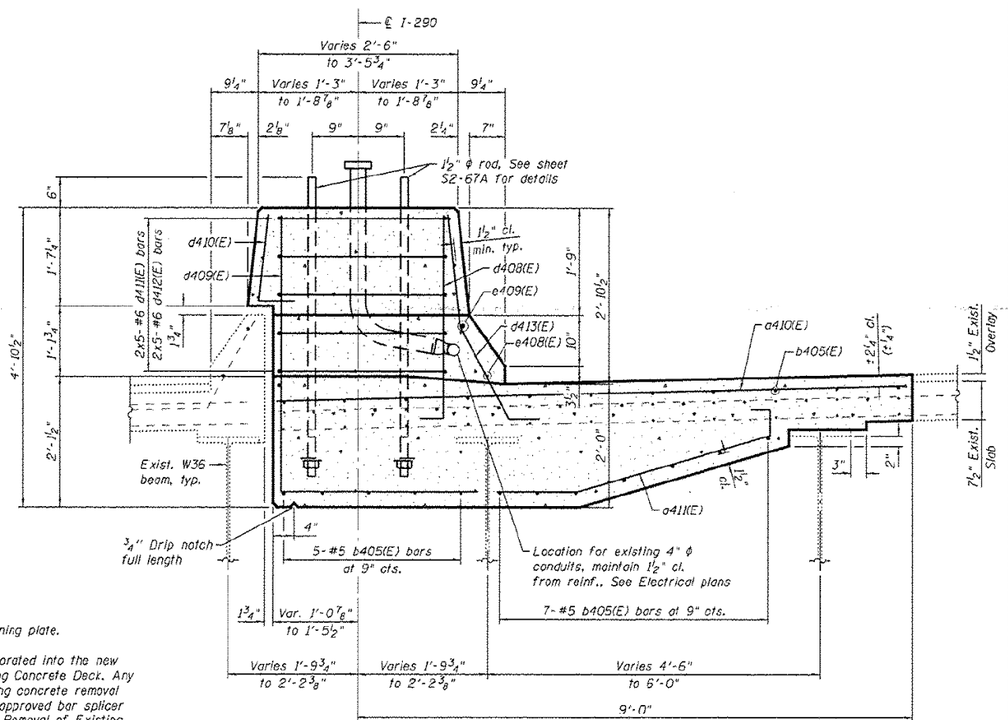

SECTION A-A

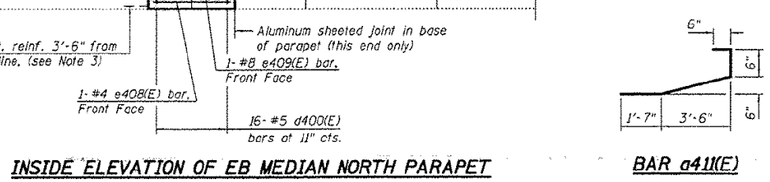

BAR a411(E)

PARSONS BRINCKERHOFF	USER NAME = patold	DESIGNED - IJL	REVISED - 4/27/2016 JIG	STATE OF ILLINOIS DEPARTMENT OF TRANSPORTATION	DECK DETAILS – UNIT IV STRUCTURE NO. 016-0461	F.A.I. RTE.	SECTION	COUNTY	TOTAL SHEETS	SHEET NO.
		CHECKED - JIG	REVISED -			90/94/290	2014-004 R&B (WB)	COOK	706	34B
	PLOT SCALE = N.T.S.	DRAWN - OCP	REVISED -					CONTRACT NO. 60X78		
	PLOT DATE = 5/16/2016	CHECKED - JIG	REVISED -		SHEET NO. 52-67B OF 52-145 SHEETS			ILLINOIS FED. AID PROJECT		

D160461-60X78-S067.B-ET.dgn

HBM ENGINEERING GROUP, LLC	USER NAME = ahmad.issa	DESIGNED -	REVISED -	STATE OF ILLINOIS DEPARTMENT OF TRANSPORTATION	EXISTING RECORD DRAWINGS	F.A.I. RTE.	SECTION	COUNTY	TOTAL SHEETS	SHEET NO.
		CHECKED -	REVISED -			90/94/290	2014-013R&B-R	COOK	1972	1709
	PLOT SCALE = N.T.S	DRAWN -	REVISED -					CONTRACT NO. 60X93		
	PLOT DATE = 7/26/2018	CHECKED - MI, MAI	REVISED -					ILLINOIS	FED. AID PROJECT	

FILE NAME: pw:\\61479-PWINT.aecomonline.local:AECOM_DS02_NA\Documents\01 Americas\Transportation\60269938 Circle\Phase_II\000_CAD\008_Structural\Structure_016-1718\Existing Plans\33906-60X93-SXX-Existing131

2:17:59 PM

FOR INFORMATION ONLY

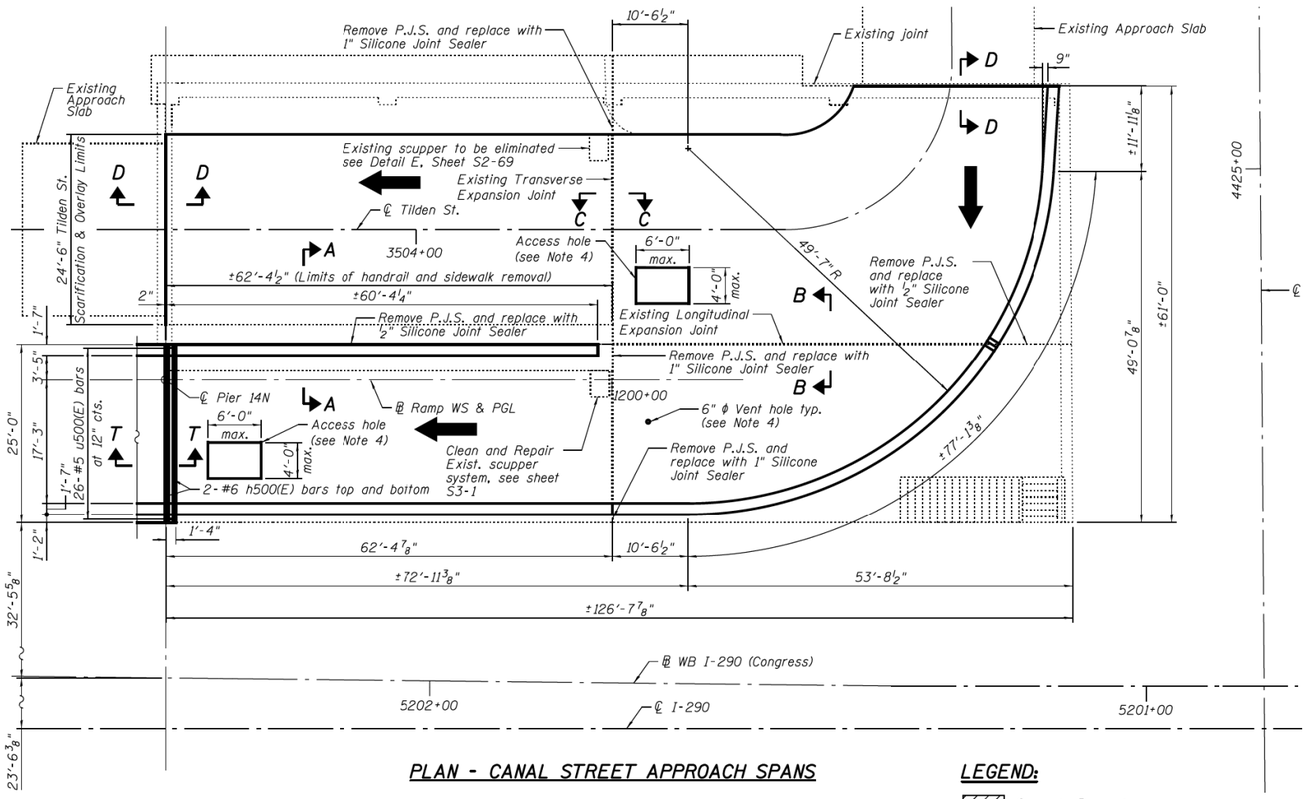

PLAN - CANAL STREET APPROACH SPANS

LEGEND:

- Concrete Removal
- Bridge Deck Scarification
- Handrail Removal

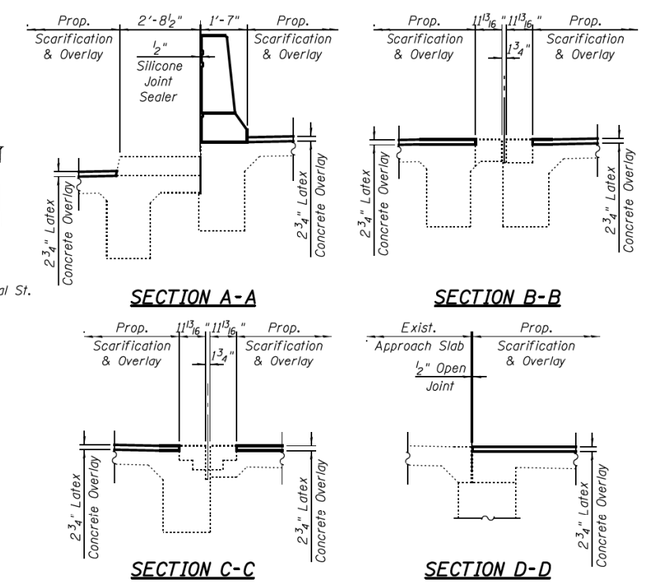

Notes:

1. See sheet S2-67, for section T-T.
2. See sheet S2-69, for parapet details, reinforcement and Bill of Material.
3. The cabinet for traffic surveillance loops on the Canal Street Entrance Ramp near Sta. 1200+60 (Ramp WS), is attached to the existing structure at the Canal Street Entrance Ramp. ITS infrastructure will be relocated, as necessary, to avoid conflict with the proposed parapet.
4. Proposed access holes and vent holes between existing beams shall be reconstructed to original deck level as shown in proposed cross section. The location to be determined by Contractor. Cost of access holes and vent holes removal and reconstruction shall be included in Lightweight Cellular Concrete Fill, see MSE wall plans (SN 016-1831) Sheets S3-1 and S3-2.
5. Bridge deck scarification and latex concrete overlay work shall be performed in stages to allow continuous access to the entrance and garage of 525 W. Van Buren St.
6. Existing reinforcement shall be cleaned and incorporated into the new construction.
7. Any reinforcement bars that are damaged during access hole and vent hole removal and reconstruction shall be repaired or replaced using an approved bar splicer or anchorage system. Cost included with Lightweight Cellular Concrete Fill.

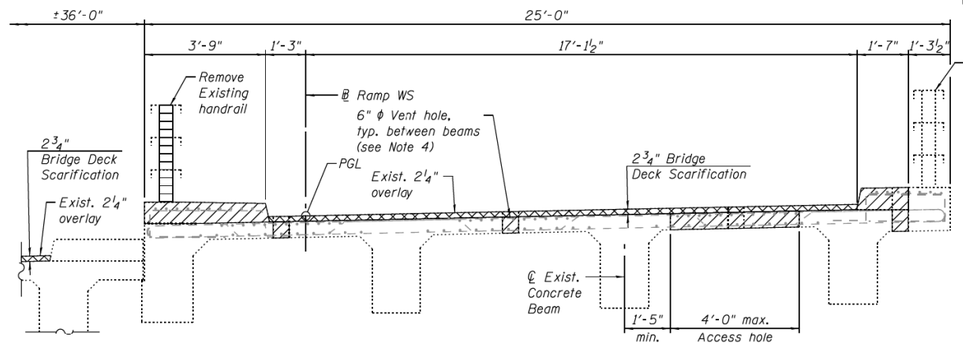

EXISTING CROSS SECTION

(Looking East, Showing removal)

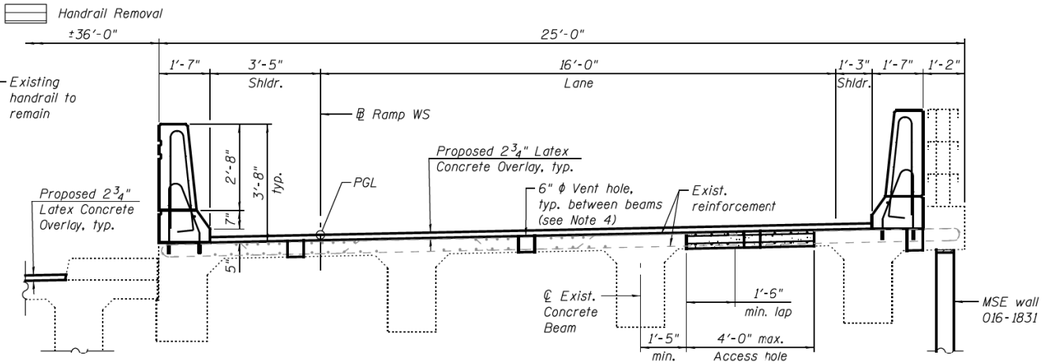

PROPOSED CROSS SECTION

(Looking East)

016046I-60X78-S068-DEX.dgn

PARSONS BRINCKERHOFF	USER NAME = poteld	DESIGNED - HA	REVISED -	STATE OF ILLINOIS DEPARTMENT OF TRANSPORTATION	APPROACH SPAN PLAN STRUCTURE NO. 016-0461	F.A.I. RTE.	SECTION	COUNTY	TOTAL SHEETS	SHEET NO.
		CHECKED - LFC	REVISED -			90/94/290	2014-004 R&B (WB)	COOK	706	345
	PLOT SCALE = N.T.S.	DRAWN - DCP	REVISED -					CONTRACT NO. 60X78		
	PLOT DATE = 3/23/2016	CHECKED - JIG	REVISED -		SHEET NO. S2-68 OF S2-145 SHEETS			ILLINOIS FED. AID PROJECT		

HBM ENGINEERING GROUP, LLC	USER NAME = ahmad.issa	DESIGNED -	REVISED -	STATE OF ILLINOIS DEPARTMENT OF TRANSPORTATION	EXISTING RECORD DRAWINGS	F.A.I. RTE.	SECTION	COUNTY	TOTAL SHEETS	SHEET NO.
		CHECKED -	REVISED -			90/94/290	2014-013R&B-R	COOK	1972	1710
	PLOT SCALE = N.T.S	DRAWN -	REVISED -					CONTRACT NO. 60X93		
	PLOT DATE = 7/26/2018	CHECKED - MI, MAI	REVISED -					ILLINOIS FED. AID PROJECT		

FILE NAME: pw:\\617479-PWINT.aecomonline.local:AECOM_DS02_NA\Documents\01 Americas\Transportation\60269938 Circle\Phase_II\000_CAD\008_Structural\Structure_016-1718\Existing Plans\33906-60X93-SXX-Existing132

2:18:07 PM

FOR INFORMATION ONLY

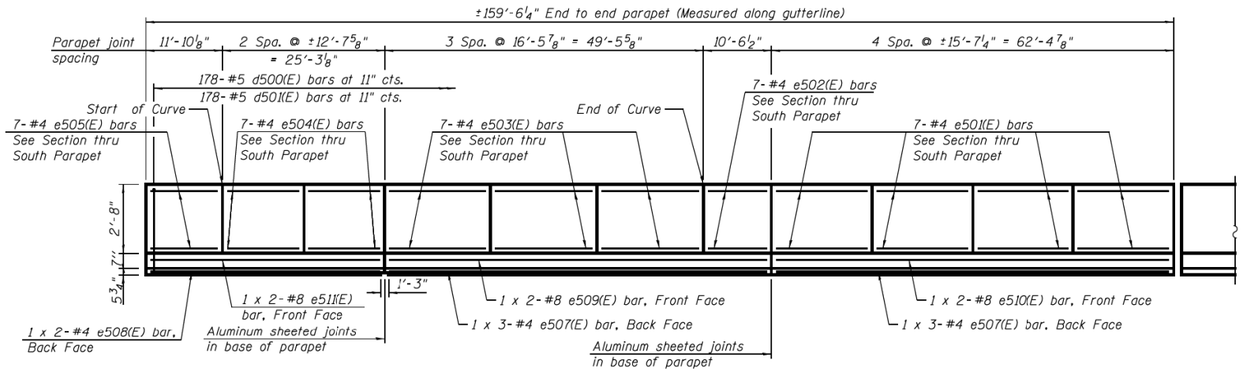

INSIDE ELEVATION OF SOUTH PARAPET

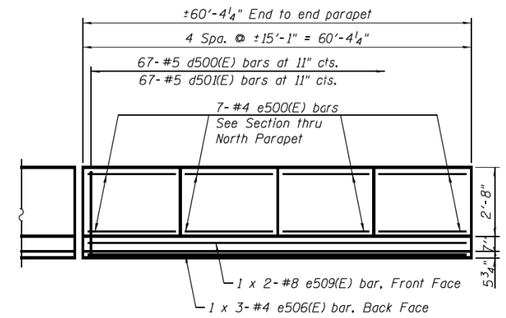

INSIDE ELEVATION OF NORTH PARAPET

* Core and set #5 d501(E) bar according to Article 509.06 of the Standard Specifications. Cored holes shall be roughened or scored per manufacturer's recommendations. Maximum depth of hole shall not exceed 6". Cost included with Reinforcement Bars, Epoxy Coated.

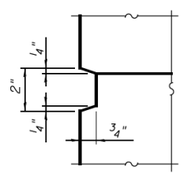

REVEAL DETAIL

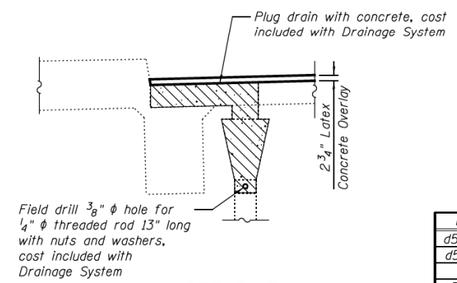

DETAIL E

MINIMUM BAR LAP
(Parapet)
#4 bar = 2'-0"
#8 bar = 5'-2"

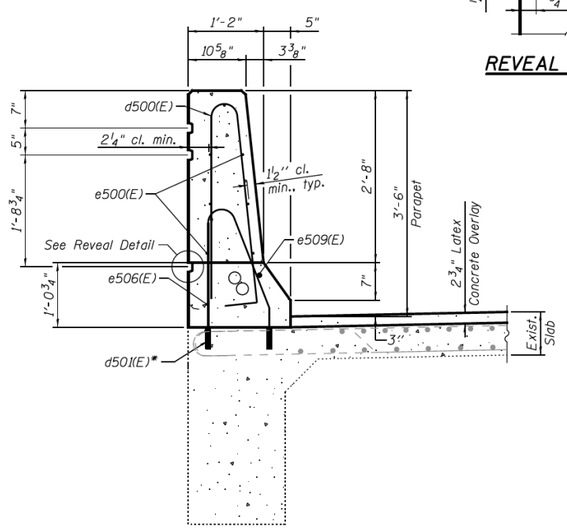

SECTION THRU NORTH PARAPET

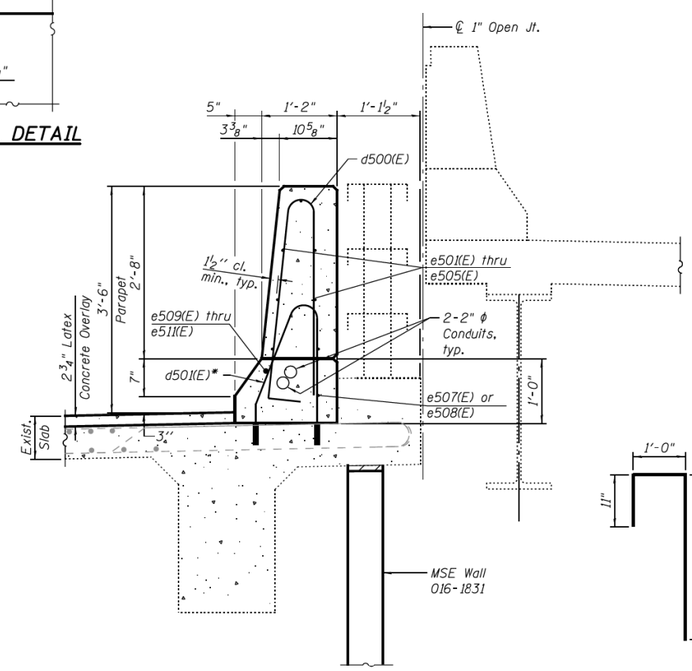

SECTION THRU SOUTH PARAPET

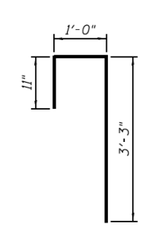

BAR u500(E)

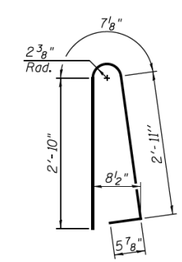

BAR d500(E)

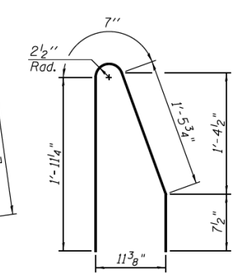

BAR d501(E)

SUPERSTRUCTURE BILL OF MATERIAL

Bar	No.	Size	Length	Shape
d500(E)	245	#5	6'-10"	
d501(E)	245	#5	4'-8"	
e500(E)	28	#4	14'-9"	
e501(E)	28	#4	15'-3"	
e502(E)	7	#4	10'-3"	
e503(E)	21	#4	16'-4"	
e504(E)	14	#4	12'-5"	
e505(E)	7	#4	11'-7"	
e506(E)	3	#4	21'-5"	
e507(E)	6	#4	22'-1"	
e508(E)	2	#4	19'-11"	
e509(E)	4	#8	32'-8"	
e510(E)	2	#8	33'-8"	
e511(E)	2	#8	21'-6"	
h500(E)	4	#6	24'-8"	
u500(E)	26	#5	5'-2"	
Reinforcement Bars, Epoxy Coated			Pound	5,040
Concrete Superstructure			Cu. Yds.	33.2
Bridge Deck Scarification 2¾"			Sq. Yds.	613
Bridge Deck Latex Concrete Overlay, 2¾"			Sq. Yds.	613
Concrete Removal			Cu. Yds.	13
Handrail Removal			Foot	62.5
Silicone Joint Sealer, ½"			Foot	75
Silicone Joint Sealer, 1"			Foot	21

Bars indicated thus 1 x 2-#8 etc. indicates 1 line of bars with 2 lengths per line.

0160461-60X78-S069-DET.dgn

PARSONS BRINCKERHOFF	USER NAME = poteld	DESIGNED - HA	REVISED -	STATE OF ILLINOIS DEPARTMENT OF TRANSPORTATION	APPROACH SPAN DETAILS STRUCTURE NO. 016-0461	F.A.I. RTE.	SECTION	COUNTY	TOTAL SHEETS	SHEET NO.
		CHECKED - LFC	REVISED -			90/94/290	2014-004 R&B (WB)	COOK	706	346
	PLOT SCALE = N.T.S.	DRAWN - DE	REVISED -					CONTRACT NO. 60X78		
	PLOT DATE = 3/23/2016	CHECKED - JIG	REVISED -		SHEET NO. S2-69 OF S2-145 SHEETS			ILLINOIS FED. AID PROJECT		

HBM ENGINEERING GROUP, LLC	USER NAME = ahmad.issa	DESIGNED -	REVISED -	STATE OF ILLINOIS DEPARTMENT OF TRANSPORTATION	EXISTING RECORD DRAWINGS	F.A.I. RTE.	SECTION	COUNTY	TOTAL SHEETS	SHEET NO.
		CHECKED -	REVISED -			90/94/290	2014-013R&B-R	COOK	1972	1711
	PLOT SCALE = N.T.S	DRAWN -	REVISED -					CONTRACT NO. 60X93		
	PLOT DATE = 7/26/2018	CHECKED - MI, MAI	REVISED -					ILLINOIS FED. AID PROJECT		

FILE NAME: pw:\\617479-PWINT.aecomonline.local:AECOM_DS02_NA\Documents\01 Americas\Transportation\60269938 Circle\Phase_II\000_CAD\008_Structural\Structure_016-1718\Existing Plans\33906-60X93-SXX-Existing133

2:18:16 PM

FOR INFORMATION ONLY

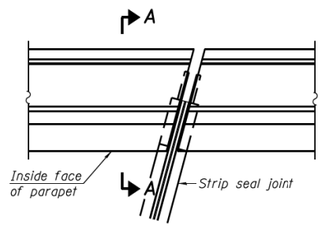

PLAN
(For skews ≤ 30°)

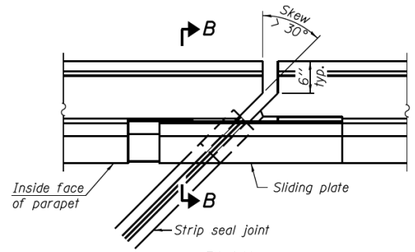

PLAN
(For skews > 30°)
Showing point block

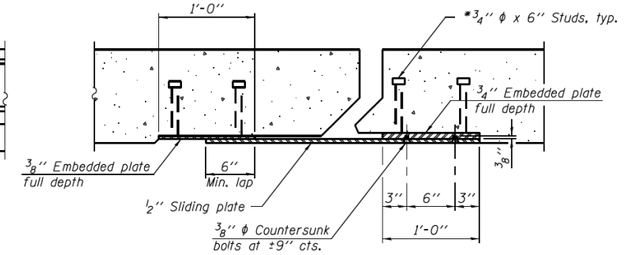

SECTION C-C

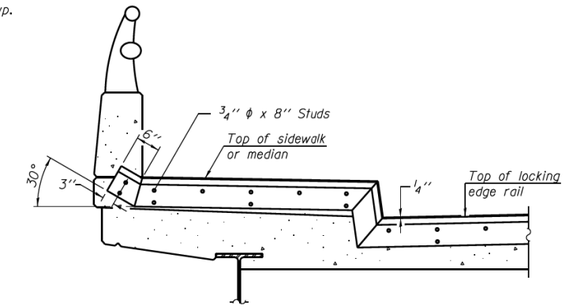

TYPICAL END TREATMENT AT SIDEWALK OR MEDIAN

Shorter plates with a single row of studs at 12" cts. may be necessary on medians which are shallower than 9". See manufacturer's recommendation.

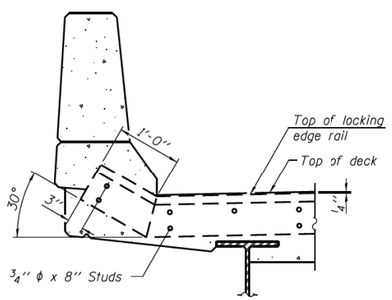

SECTION A-A

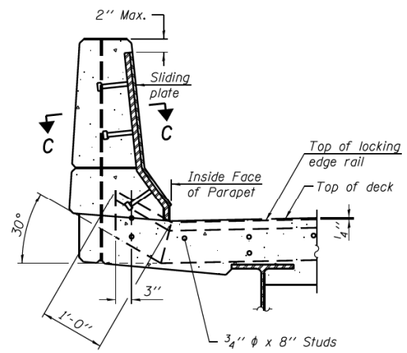

SECTION B-B

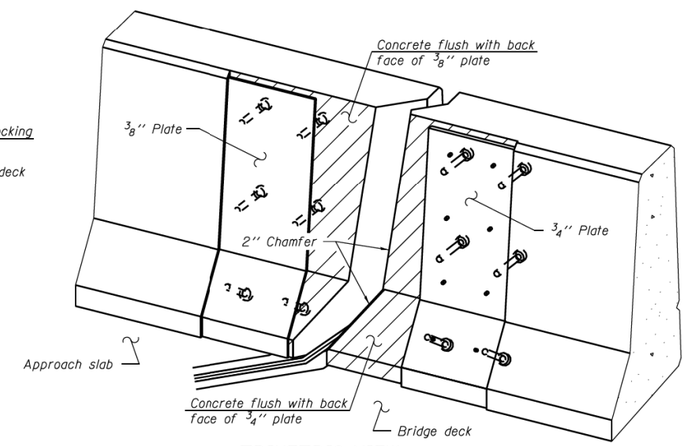

TRIMETRIC VIEW
(Showing back plates only)

Notes:

The strip seal shall be made continuous and shall have a minimum thickness of 1/4". The configuration of the strip seal shall match the configuration of the Locking Edge Rails. Open or "webbed" strip seal gland configurations are not permitted. The gland shall be sized for a maximum rated movement of 4 inches.

The Locking Edge Rails depicted are conceptual only, except for the minimum dimensions shown. The actual configuration of the Locking Edge Rails and matching strip seal may vary from manufacturer to manufacturer. Flanged edge rails will not be allowed. Locking Edge Rails may be spliced at slope discontinuities.

The manufacturer's recommended installation methods shall be followed.

The joint opening and deck dimensions detailed on the superstructure are based on a rolled rail expansion joint. If the Contractor elects to use the welded rail expansion joint, the opening and deck dimensions shall be modified according to the dimensions detailed on this sheet. Required modifications shall be made at no additional cost to the State.

All steel components shall be galvanized after fabrication according to Article 520.03 of the Standard Specifications.

Maximum space between rail segments shall be 3/16", sealed with a suitable sealant. Joints in rails within 10 ft. of curbs shall be welded.

Parapet plates and anchorage studs for skews > 30° included in the cost of Preformed Joint Strip Seal.

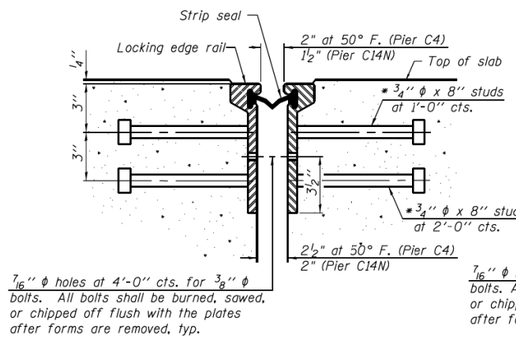

SECTION THRU ROLLED RAIL JOINT

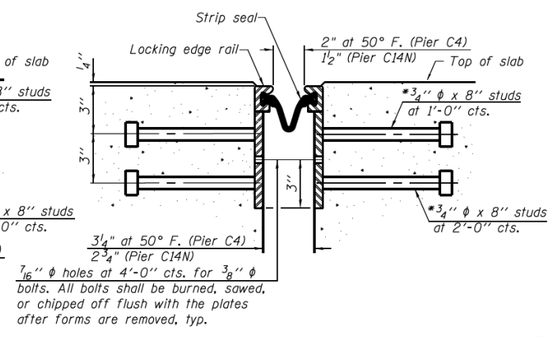

SECTION THRU WELDED RAIL JOINT

* Granular or solid flux filled headed studs conforming to Article 1006.32 of the Std. Specs., automatically end welded.

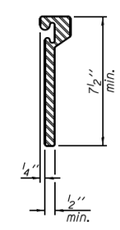

ROLLED EXTRUDED RAIL

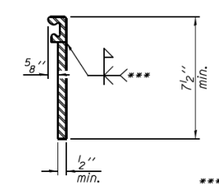

WELDED RAIL

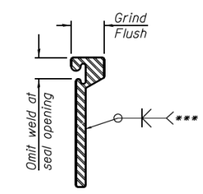

*** Back gouge not required if complete joint penetration is verified by mock-up.

LOCKING EDGE RAIL SPLICE

The inside of the locking edge rail groove shall be free of weld residue.

Rolled rail shown, welded rail similar.

LOCKING EDGE RAILS

BILL OF MATERIAL

Item	Unit	Total
Preformed Joint Strip Seal	Foot	75

EJ-SSJ 1-27-12

0160461-60X78-S070-EXP.dgn

PARSONS BRINCKERHOFF	USER NAME = poteld	DESIGNED - PJL	REVISED -
		CHECKED - LFC	REVISED -
	PLOT SCALE = N.T.S.	DRAWN - DCP	REVISED -
	PLOT DATE = 3/23/2016	CHECKED - JIG	REVISED -

STATE OF ILLINOIS
DEPARTMENT OF TRANSPORTATION

PREFORMED JOINT STRIP SEAL – PIER C4 & 14N
STRUCTURE NO. 016–0461

SHEET NO. S2-70 OF S2-145 SHEETS

F.A.I. RTE.	SECTION	COUNTY	TOTAL SHEETS	SHEET NO.
90/94/290	2014-004 R&B (WB)	COOK	706	347
		CONTRACT NO. 60X78		
		ILLINOIS FED. AID PROJECT		

HBM ENGINEERING GROUP, LLC	USER NAME = ahmad.issa	DESIGNED -	REVISED -
		CHECKED -	REVISED -
	PLOT SCALE = N.T.S	DRAWN -	REVISED -
	PLOT DATE = 7/26/2018	CHECKED - MI, MAI	REVISED -

STATE OF ILLINOIS
DEPARTMENT OF TRANSPORTATION

EXISTING RECORD DRAWINGS

F.A.I. RTE.	SECTION	COUNTY	TOTAL SHEETS	SHEET NO.
90/94/290	2014-013R&B-R	COOK	1972	1712
		CONTRACT NO. 60X93		
		ILLINOIS FED. AID PROJECT		

FILE NAME: pw:\\617479-PWINT.aecomonline.local:AECOM_DS02_NA\Documents\01 Americas\Transportation\60269938 Circle\Phase_II\000_CAD\008_Structural\Structure_016-1718\Existing Plans\33906-60X93-SXX-Existing134

2:18:24 PM

FOR INFORMATION ONLY

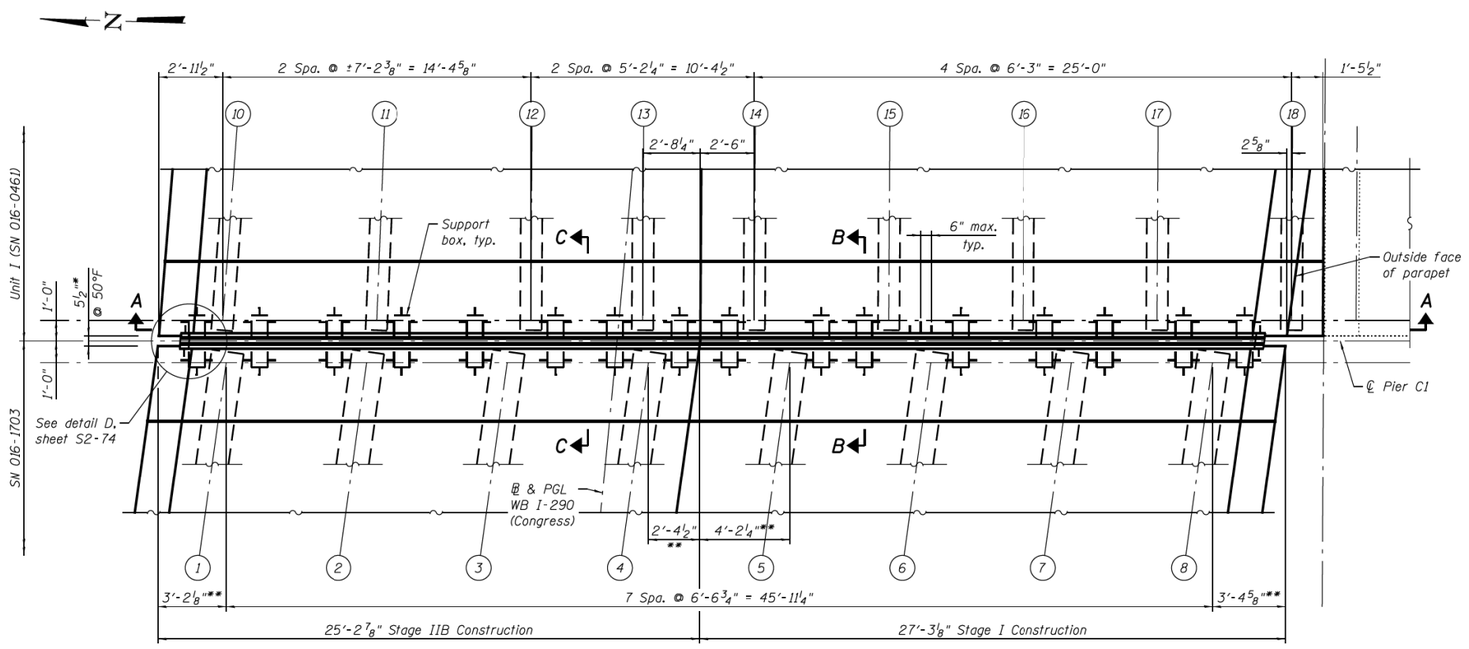

* Actual dimension may vary depending on Manufacturer's design

** Measured to edge of deck

PLAN

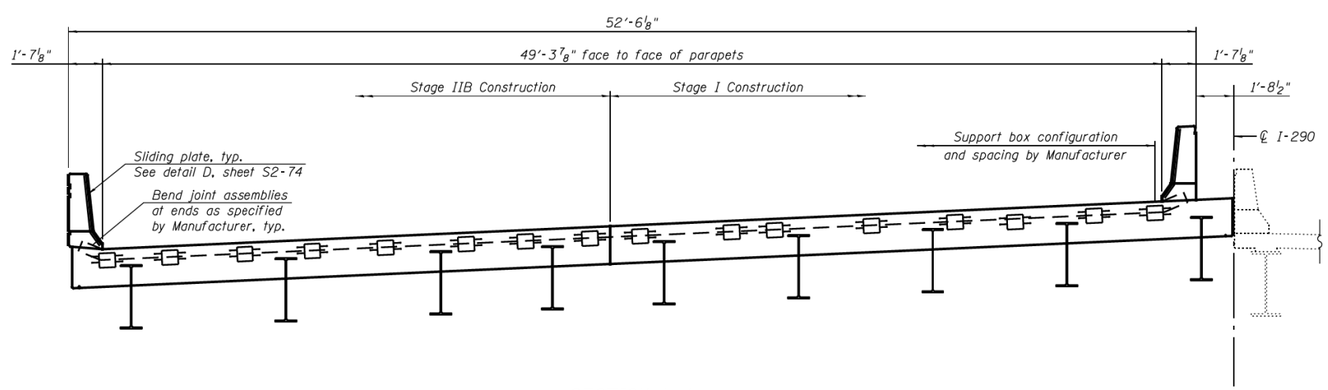

SECTION A-A

Notes:

1. Modular expansion joint shall be designed according to Section 14 of the 2014 AASHTO specifications for HL-93 truck loading with impact and the Special Provision.
2. The joint shall be a shop-fabricated modular assembly with multiple support bars, edge and seperatation beams and transverse neoprene seals, providing a continuous seal across the deck.
3. Joint shall be fabricated and installed according to the manufacturer's recommendations and as specified in the special provisions for a modular joint system and as approved by the Engineer.
4. Joint shall be fabricated to conform to the roadway profile and cross-slope.
5. All exposed structural steel elements such as separation beams, edge beams, support bars, sliding plate assemblies and cover plates shall be fabricated with AASHTO M270 Grade 50 ksi steel.
6. The expansion joint assembly shall be hot dip galvanized in accordance with AASHTO M111 or M232 after fabrication.
7. Modular expansion joints shall be shipped in one piece unless noted.
8. Concrete anchor studs attached to the modular expansion joint shall conform to the requirements of Article 1006.32 of the Standard Specifications. The cost of the anchor studs shall be included with Modular Expansion Joints, 6". Number and spacing of concrete anchor studs shall be determined by Joint Manufacturer in accordance with Note 1 above.
9. No aluminum components shall be allowed.
10. All splices of center beams and edge beams located in the roadway shall be full penetration welds. (Upturn splices may be partial penetration welds)
11. See deck reinforcement plan sheet for bar size, designation and blockout dimensions.
12. Sliding plate assemblies as shown shall be provided for the parapets. The cost of furnishing and installing sliding plate assemblies shall be included with Modular Expansion Joint, 6".
13. Coordinate blockout dimensions and pocket locations and reinforcement bar layout with Joint Manufacturer. Blockout area to be poured after expansion assemblies have been adjusted.
14. Modular expansion joints shall be assembled in their final relative position with the ends in place for shop inspection and acceptance.
15. The manufacturer's recommended installation methods shall be followed.
16. Modular Expansion Joint 6" shall provide a minimum total movement of 4 1/4".
17. See sheet S2-74 for sections B-B and C-C.

BILL OF MATERIAL

Item	Unit	Total
Modular Expansion Joint, 6"	Foot	51

0160461-60X78-S071-EXP.dgn

PARSONS BRINCKERHOFF	USER NAME = poteld	DESIGNED - PJL	REVISED -
		CHECKED - LFC	REVISED -
	PLOT SCALE = N.T.S.	DRAWN - DCP	REVISED -
	PLOT DATE = 3/23/2016	CHECKED - JIG	REVISED -

STATE OF ILLINOIS
DEPARTMENT OF TRANSPORTATION

MODULAR EXPANSION JOINT – PIER C1
STRUCTURE NO. 016–0461
SHEET NO. S2-71 OF S2-145 SHEETS

F.A.I. RTE.	SECTION	COUNTY	TOTAL SHEETS	SHEET NO.
90/94/290	2014-004 R&B (WB)	COOK	706	348
		CONTRACT NO. 60X78		
		ILLINOIS FED. AID PROJECT		

FILE NAME: pw:\\61717479-PWINT.aecomonline.local:AECOM_DS02_NA\Documents\01 Americas\Transportation\60269938 Circle\Phase_II\000_CAD\008_Structural\Structure_016-1718\Existing Plans\33906-60X93-SXX-Existing135

HBM ENGINEERING GROUP, LLC	USER NAME = ahmad.issa	DESIGNED -	REVISED -
		CHECKED -	REVISED -
	PLOT SCALE = N.T.S	DRAWN -	REVISED -
	PLOT DATE = 7/26/2018	CHECKED - MI, MAI	REVISED -

STATE OF ILLINOIS
DEPARTMENT OF TRANSPORTATION

EXISTING RECORD DRAWINGS

F.A.I. RTE.	SECTION	COUNTY	TOTAL SHEETS	SHEET NO.
90/94/290	2014-013R&B-R	COOK	1972	1713
		CONTRACT NO. 60X93		
		ILLINOIS FED. AID PROJECT		

2:18:33 PM

FOR INFORMATION ONLY

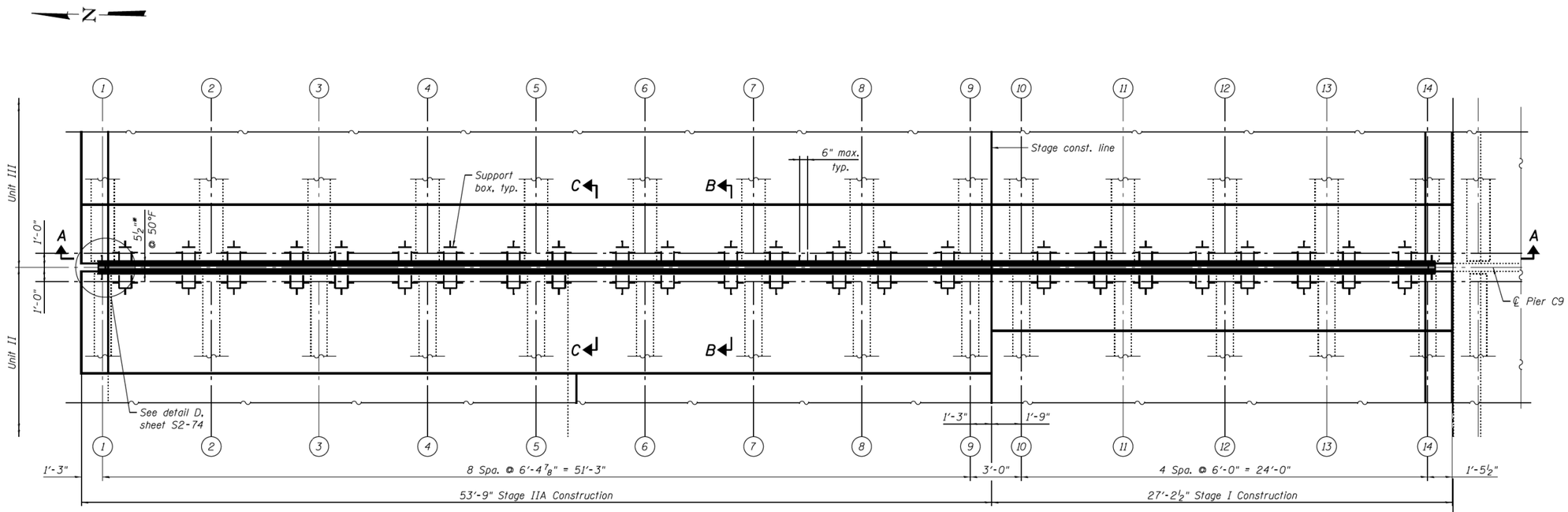

PLAN

* Actual dimension may vary depending on Manufacturer's design

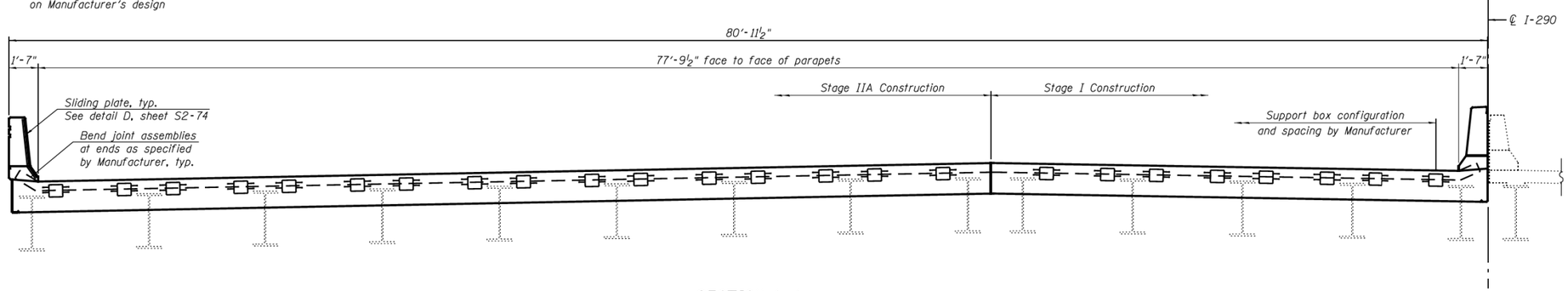

SECTION A-A

Notes:

See sheet S2-71, for modular expansion joint notes.

See sheet S2-74, for sections B-B and C-C.

Modular Expansion Joint 6" shall provide a minimum total movement of 5¼".

BILL OF MATERIAL

Item	Unit	Total
Modular Expansion Joint, 6"	Foot	79

0160461-60X78-S072-EXP.dgn

PARSONS BRINCKERHOFF	USER NAME = poteld	DESIGNED - PJL	REVISED -	STATE OF ILLINOIS DEPARTMENT OF TRANSPORTATION	MODULAR EXPANSION JOINT – PIER C9 STRUCTURE NO. 016–0461	F.A.I. RTE.	SECTION	COUNTY	TOTAL SHEETS	SHEET NO.
		CHECKED - LFC	REVISED -			90/94/290	2014-004 R&B (WB)	COOK	706	349
	PLOT SCALE = N.T.S.	DRAWN - DCP	REVISED -			CONTRACT NO. 60X78				
	PLOT DATE = 3/23/2016	CHECKED - JIG	REVISED -		SHEET NO. S2-72 OF S2-145 SHEETS	ILLINOIS FED. AID PROJECT				

HBM ENGINEERING GROUP, LLC	USER NAME = ahmad.issa	DESIGNED -	REVISED -	STATE OF ILLINOIS DEPARTMENT OF TRANSPORTATION	EXISTING RECORD DRAWINGS	F.A.I. RTE.	SECTION	COUNTY	TOTAL SHEETS	SHEET NO.
		CHECKED -	REVISED -			90/94/290	2014-013R&B-R	COOK	1972	1714
	PLOT SCALE = N.T.S	DRAWN -	REVISED -			CONTRACT NO. 60X93				
	PLOT DATE = 7/26/2018	CHECKED - MI, MAI	REVISED -			ILLINOIS	FED. AID PROJECT			

FILE NAME: pw:\\61479-PW\INT.aecomonline.local:AECOM_DS02_NA\Documents\01 Americas\Transportation\60269938 Circle\Phase_II\000_CAD\008_Structural\Structure_016-1718\Existing Plans\33906-60X93-SXX-Existing136

2:18:42 PM

FOR INFORMATION ONLY

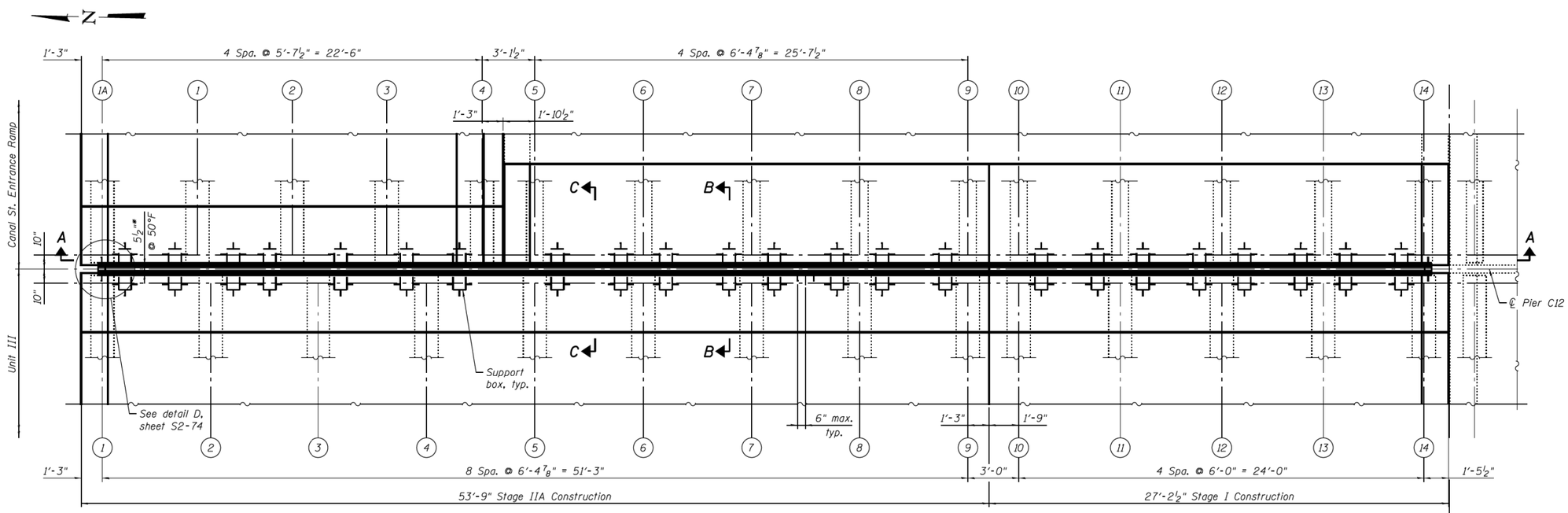

PLAN

* Actual dimension may vary depending on Manufacturer's design

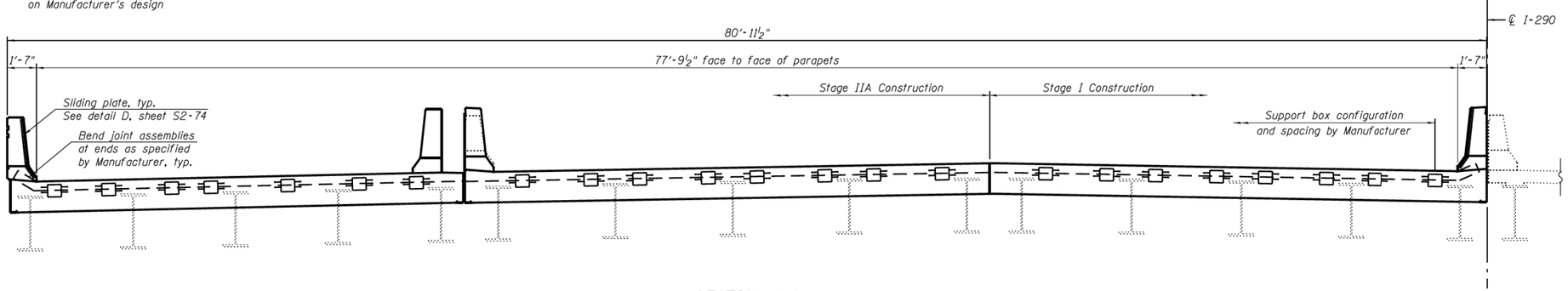

SECTION A-A

Notes:

See sheet S2-71, for modular expansion joint notes.

See sheet S2-74, for sections B-B and C-C.

Modular Expansion Joint 6" shall provide a minimum total movement of 4½".

BILL OF MATERIAL

Item	Unit	Total
Modular Expansion Joint, 6"	Foot	79

0160461-60X78-S073-EXP.dgn

PARSONS BRINCKERHOFF	USER NAME = poteld	DESIGNED - PJL	REVISED -	STATE OF ILLINOIS DEPARTMENT OF TRANSPORTATION	MODULAR EXPANSION JOINT – PIER C12 STRUCTURE NO. 016–0461	F.A.I. RTE.	SECTION	COUNTY	TOTAL SHEETS	SHEET NO.
		CHECKED - LFC	REVISED -			90/94/290	2014-004 R&B (WB)	COOK	706	350
	PLOT SCALE = N.T.S.	DRAWN - DCP	REVISED -			CONTRACT NO. 60X78				
	PLOT DATE = 3/23/2016	CHECKED - JIG	REVISED -		SHEET NO. S2-73 OF S2-145 SHEETS	ILLINOIS FED. AID PROJECT				

FILE NAME: pw:\\617479-PW\INT.aecomonline.local:AECOM_DS02_NA\Documents\01 Americas\Transportation\60269938 Circle\Phase_II\000_CAD\008_Structural\Structure_016-1718\Existing Plans\33906-60X93-SXX-Existing137

2:18:50 PM

HBM ENGINEERING GROUP, LLC	USER NAME = ahmad.issa	DESIGNED -	REVISED -	STATE OF ILLINOIS DEPARTMENT OF TRANSPORTATION	EXISTING RECORD DRAWINGS	F.A.I. RTE.	SECTION	COUNTY	TOTAL SHEETS	SHEET NO.
		CHECKED -	REVISED -			90/94/290	2014-013R&B-R	COOK	1972	1715
	PLOT SCALE = N.T.S	DRAWN -	REVISED -			CONTRACT NO. 60X93				
	PLOT DATE = 7/26/2018	CHECKED - MI, MAI	REVISED -			ILLINOIS FED. AID PROJECT				

FOR INFORMATION ONLY

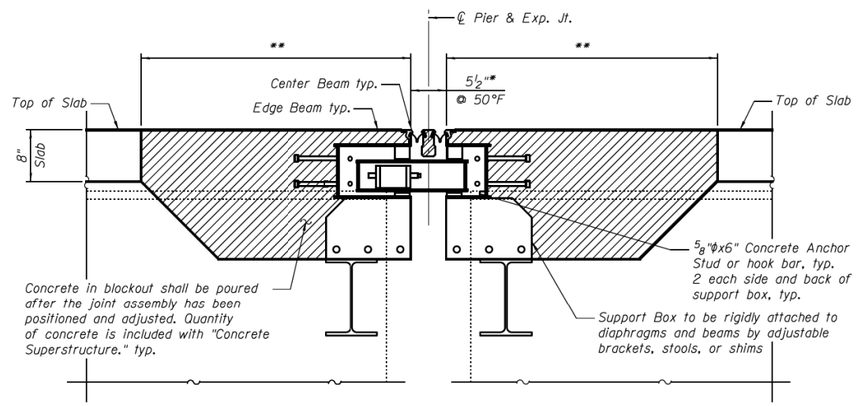

SECTION B-B

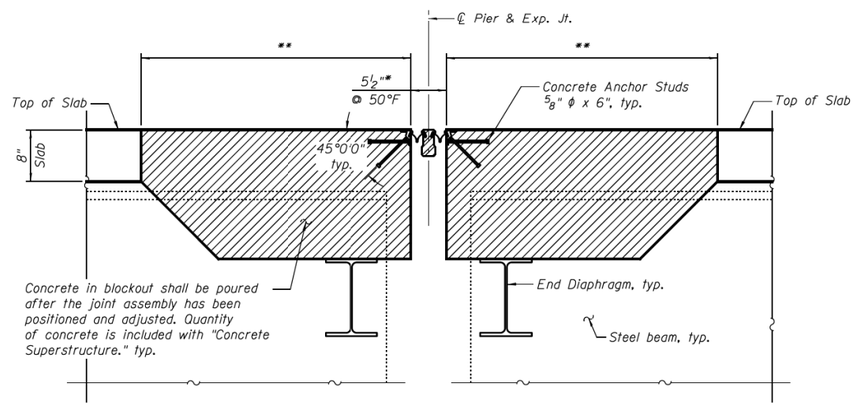

SECTION C-C

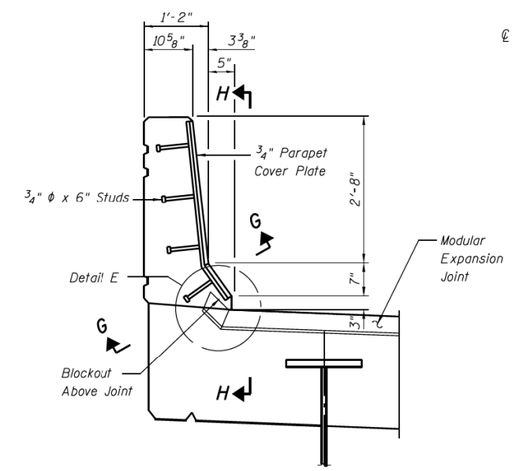

DETAIL D

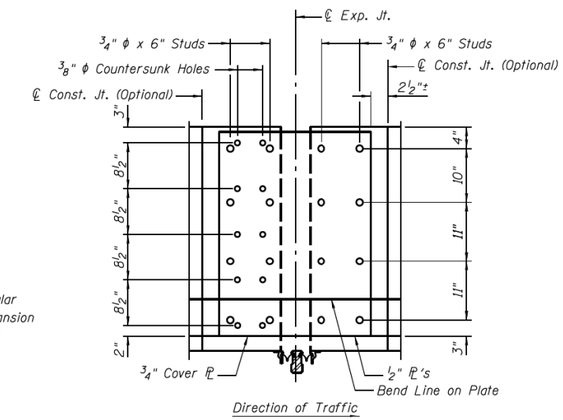

SECTION H-H

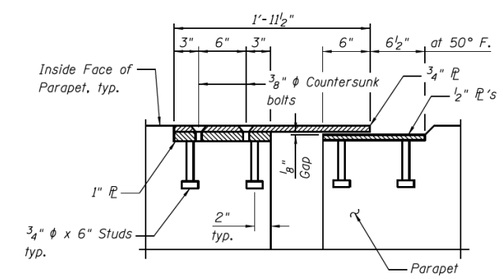

SECTION G-G

* Number of beams and seals determined by manufacturer

** Blockout dimensions to be verified by Contractor with Joint Manufacturer. See sheet S2-51 for blockout dimensions and additional details of edge beam at Pier C1. See sheet S2-63 for blockout dimensions and additional details of edge beam at Pier C9. See sheet S2-66 for blockout dimensions and additional details for edge beam at Pier C12.

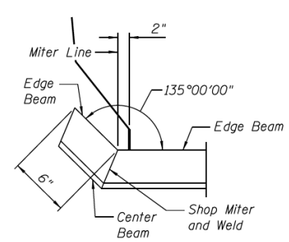

DETAIL E

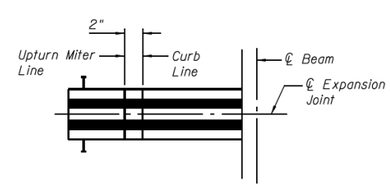

DETAIL F

0160461-60X78-S074-EXP.dgn

PARSONS BRINCKERHOFF	USER NAME = poteld	DESIGNED - PJL	REVISED -	STATE OF ILLINOIS DEPARTMENT OF TRANSPORTATION	MODULAR EXPANSION JOINT DETAILS STRUCTURE NO. 016-0461	F.A.I. RTE.	SECTION	COUNTY	TOTAL SHEETS	SHEET NO.
		CHECKED - LFC	REVISED -			90/94/290	2014-004 R&B (WB)	COOK	706	351
	PLOT SCALE = N.T.S.	DRAWN - DCP	REVISED -					CONTRACT NO. 60X78		
	PLOT DATE = 3/23/2016	CHECKED - JIG	REVISED -		SHEET NO. S2-74 OF S2-145 SHEETS			ILLINOIS FED. AID PROJECT		

HBM ENGINEERING GROUP, LLC	USER NAME = ahmad.issa	DESIGNED -	REVISED -	STATE OF ILLINOIS DEPARTMENT OF TRANSPORTATION	EXISTING RECORD DRAWINGS	F.A.I. RTE.	SECTION	COUNTY	TOTAL SHEETS	SHEET NO.
		CHECKED -	REVISED -			90/94/290	2014-013R&B-R	COOK	1972	1716
	PLOT SCALE = N.T.S	DRAWN -	REVISED -					CONTRACT NO. 60X93		
	PLOT DATE = 7/26/2018	CHECKED - MI, MAI	REVISED -					ILLINOIS FED. AID PROJECT		

FILE NAME: pw:\\617479-PWINT.aecomonline.local:AECOM_DS02_NA\Documents\01 Americas\Transportation\60269938 Circle\Phase_II\000_CAD\008_Structural\Structure_016-1718\Existing Plans\33906-60X93-SXX-Existing138

2:18:57 PM

FOR INFORMATION ONLY

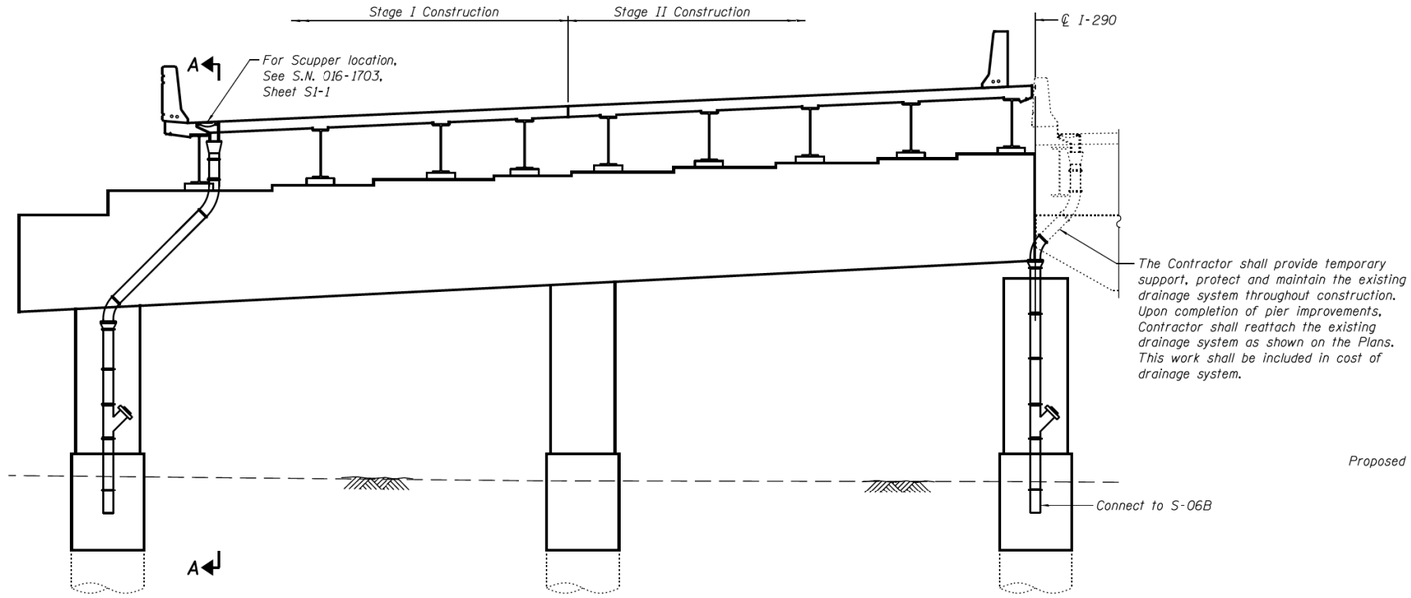

ELEVATION - PIER C1
(Looking East)

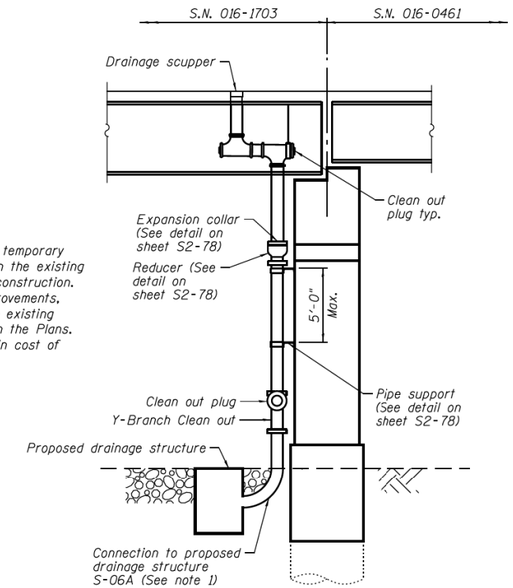

SECTION A-A

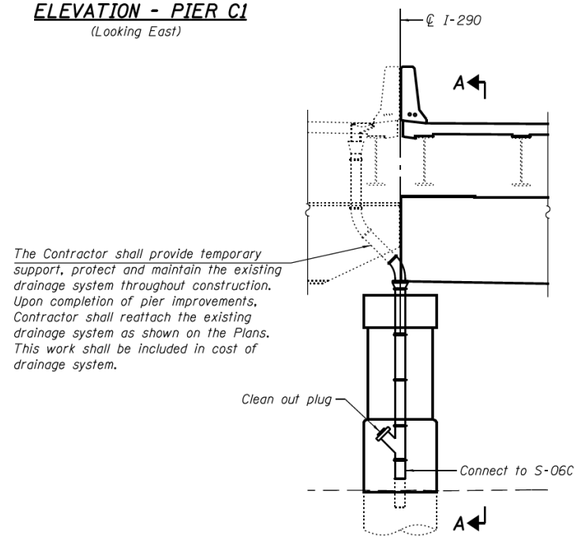

ELEVATION - PIER C4
(Looking West)

Notes:
1. Drainage system shall connect to drainage structure. See drainage schedule for stationing and offsets of drainage structure.
2. Drainage system and ITS work must be coordinated prior to their placement on the pier to avoid any conflicts.
3. Contractor shall field verify existing scuppers, pipes and drainage structures prior to any shop drawings submittal.

PARSONS BRINCKERHOFF	USER NAME = poteld	DESIGNED - HA	REVISED -	STATE OF ILLINOIS DEPARTMENT OF TRANSPORTATION	DRAINAGE SYSTEM DETAILS – PIER C1 & C4 STRUCTURE NO. 016–0461	F.A.I. RTE.	SECTION	COUNTY	TOTAL SHEETS	SHEET NO.
		CHECKED - HA	REVISED -			90/94/290	2014-004 R&B (WB)	COOK	706	352
	PLOT SCALE = N.T.S.	DRAWN - DCP	REVISED -					CONTRACT NO. 60X78		
	PLOT DATE = 3/23/2016	CHECKED - JIG	REVISED -		SHEET NO. S2-75 OF S2-145 SHEETS		ILLINOIS	FED. AID PROJECT		

HBM ENGINEERING GROUP, LLC	USER NAME = ahmad.issa	DESIGNED -	REVISED -	STATE OF ILLINOIS DEPARTMENT OF TRANSPORTATION	EXISTING RECORD DRAWINGS	F.A.I. RTE.	SECTION	COUNTY	TOTAL SHEETS	SHEET NO.
		CHECKED -	REVISED -			90/94/290	2014-013R&B-R	COOK	1972	1717
	PLOT SCALE = N.T.S	DRAWN -	REVISED -					CONTRACT NO. 60X93		
	PLOT DATE = 7/26/2018	CHECKED - MI, MAI	REVISED -				ILLINOIS	FED. AID PROJECT		

FILE NAME: pw:\\617479-PWINT.aecomonline.local:AECOM_DS02_NA\Documents\01 Americas\Transportation\60269938 Circle\Phase_II\000_CAD\008_Structural\Structure_016-1718\Existing Plans\33906-60X93-SXX-Existing139
0160461-60X78-S075-DRN.dgn
2:19:06 PM

FOR INFORMATION ONLY

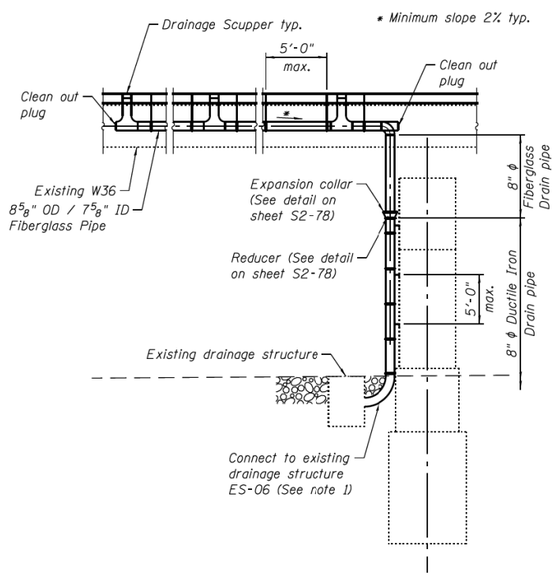

SECTION B-B

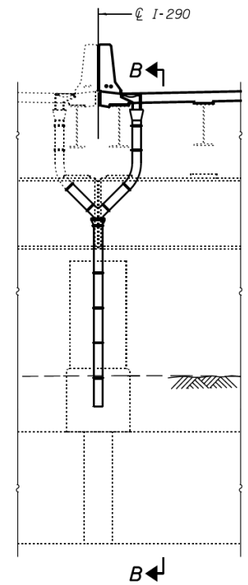

ELEVATION PIER C5
(Looking West)

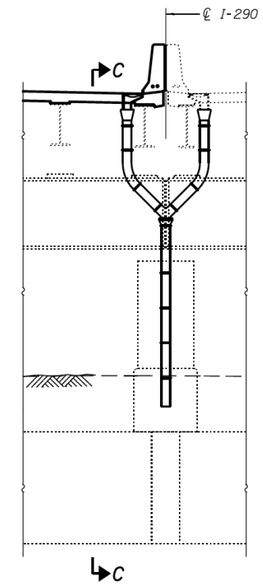

ELEVATION PIER C8
(Looking East)

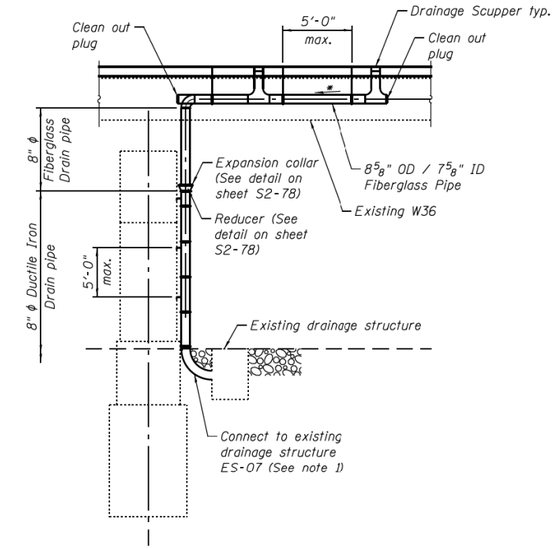

SECTION C-C

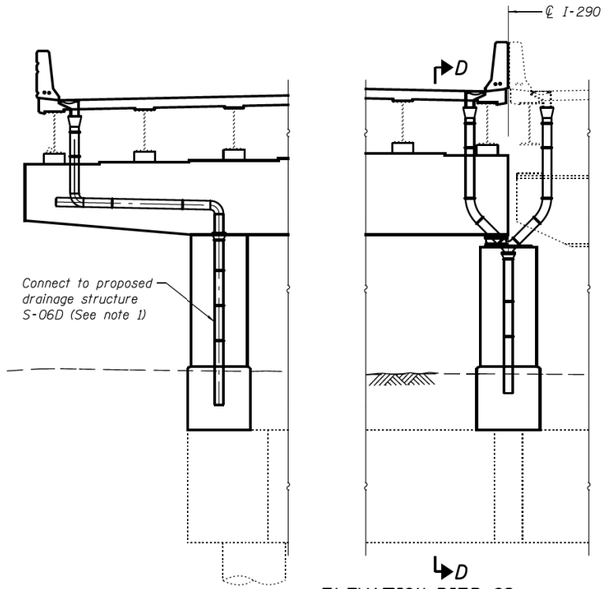

ELEVATION PIER C9
(Looking East)

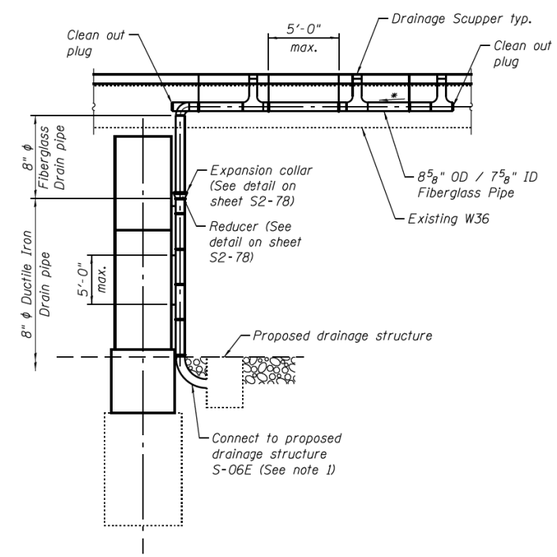

SECTION D-D

Notes:
1. Drainage system shall connect to drainage structure. See drainage schedule for stationing and offsets of drainage structure.
2. Contractor shall field verify existing scuppers, pipes and drainage structures prior to any shop drawings submittal.

PARSONS BRINCKERHOFF	USER NAME = poteld	DESIGNED - HA	REVISED -	STATE OF ILLINOIS DEPARTMENT OF TRANSPORTATION	DRAINAGE SYSTEM DETAILS – PIER C5, C8 & C9 STRUCTURE NO. 016–0461	F.A.I. RTE.	SECTION	COUNTY	TOTAL SHEETS	SHEET NO.
		CHECKED - HA	REVISED -			90/94/290	2014-004 R&B (WB)	COOK	706	353
	PLOT SCALE = N.T.S.	DRAWN - DCP	REVISED -					CONTRACT NO. 60X78		
	PLOT DATE = 3/23/2016	CHECKED - JIG	REVISED -		SHEET NO. S2-76 OF S2-145 SHEETS		ILLINOIS	FED. AID PROJECT		

0160461-60X78-S076-DRN.dgn

HBM ENGINEERING GROUP, LLC	USER NAME = ahmad.issa	DESIGNED -	REVISED -	STATE OF ILLINOIS DEPARTMENT OF TRANSPORTATION	EXISTING RECORD DRAWINGS	F.A.I. RTE.	SECTION	COUNTY	TOTAL SHEETS	SHEET NO.
		CHECKED -	REVISED -			90/94/290	2014-013R&B-R	COOK	1972	1718
	PLOT SCALE = N.T.S	DRAWN -	REVISED -					CONTRACT NO. 60X93		
	PLOT DATE = 7/26/2018	CHECKED - MI, MAI	REVISED -				ILLINOIS	FED. AID PROJECT		

FILE NAME: pw:\\617479-PWINT.aecomonline.local:AECOM_DS02_NA\Documents\01 Americas\Transportation\60269938 Circle\Phase_II\000_CAD\008_Structural\Structure_016-1718\Existing Plans\33906-60X93-SXX-Existing140

2:19:14 PM

FOR INFORMATION ONLY

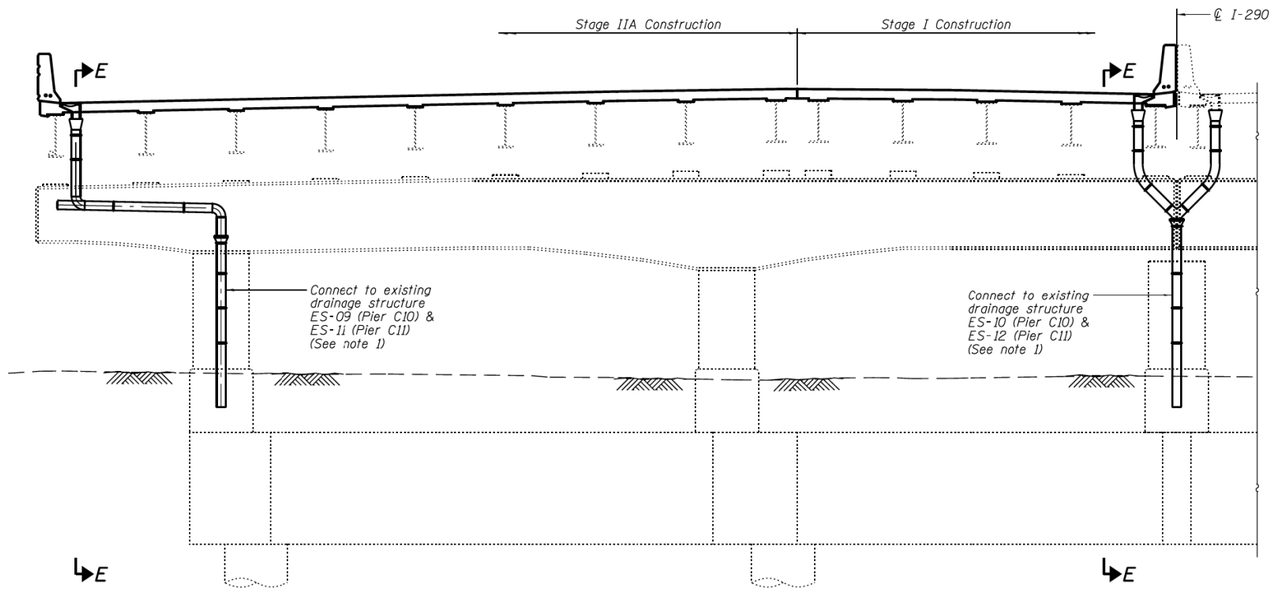

ELEVATION PIER C10 & C11
(Looking East)

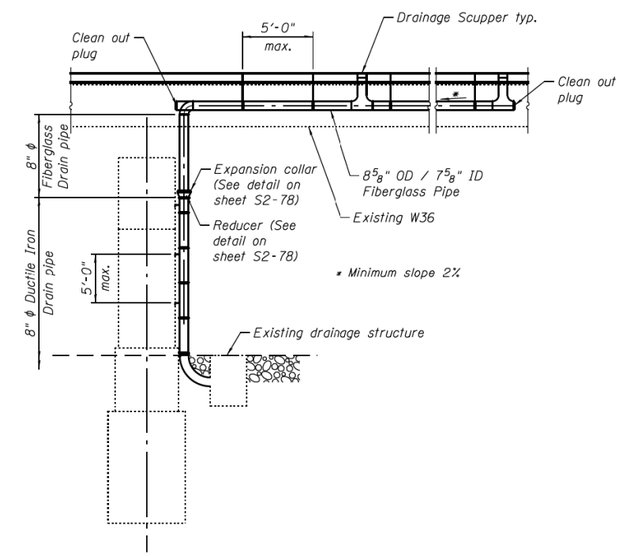

SECTION E-E

Notes:

1. Drainage system shall connect to an existing drainage structure. See drainage schedule for stationing and offsets of existing drainage structure.
2. Contractor shall field verify existing scuppers, pipes and drainage structures prior to any shop drawings submittal.

0160461-60X78-S077-DRN.dgn

PARSONS BRINCKERHOFF	USER NAME = poteld	DESIGNED - HA	REVISED -	STATE OF ILLINOIS DEPARTMENT OF TRANSPORTATION	DRAINAGE SYSTEM DETAILS – PIER C10 & C11 STRUCTURE NO. 016–0461	F.A.I. RTE.	SECTION	COUNTY	TOTAL SHEETS / SHEET NO.
		CHECKED - HA	REVISED -			90/94/290	2014-004 R&B (WB)	COOK	706 / 354
	PLOT SCALE = N.T.S.	DRAWN - DCP	REVISED -					CONTRACT NO. 60X78	
	PLOT DATE = 3/23/2016	CHECKED - JIG	REVISED -		SHEET NO. S2-77 OF S2-145 SHEETS		ILLINOIS	FED. AID PROJECT	

HBM ENGINEERING GROUP, LLC	USER NAME = ahmad.issa	DESIGNED -	REVISED -	STATE OF ILLINOIS DEPARTMENT OF TRANSPORTATION	EXISTING RECORD DRAWINGS	F.A.I. RTE.	SECTION	COUNTY	TOTAL SHEETS / SHEET NO.
		CHECKED -	REVISED -			90/94/290	2014-013R&B-R	COOK	1972 / 1719
	PLOT SCALE = N.T.S	DRAWN -	REVISED -					CONTRACT NO. 60X93	
	PLOT DATE = 7/26/2018	CHECKED - MI, MAI	REVISED -				ILLINOIS	FED. AID PROJECT	

FILE NAME: pw:\\617479-PWINT.aecomonline.local:AECOM_DS02_NA\Documents\01 Americas\Transportation\60269938 Circle\Phase_II\000_CAD\008_Structural\Structure_016-1718\Existing Plans\33906-60X93-SXX-Existing141

2:19:22 PM

FOR INFORMATION ONLY

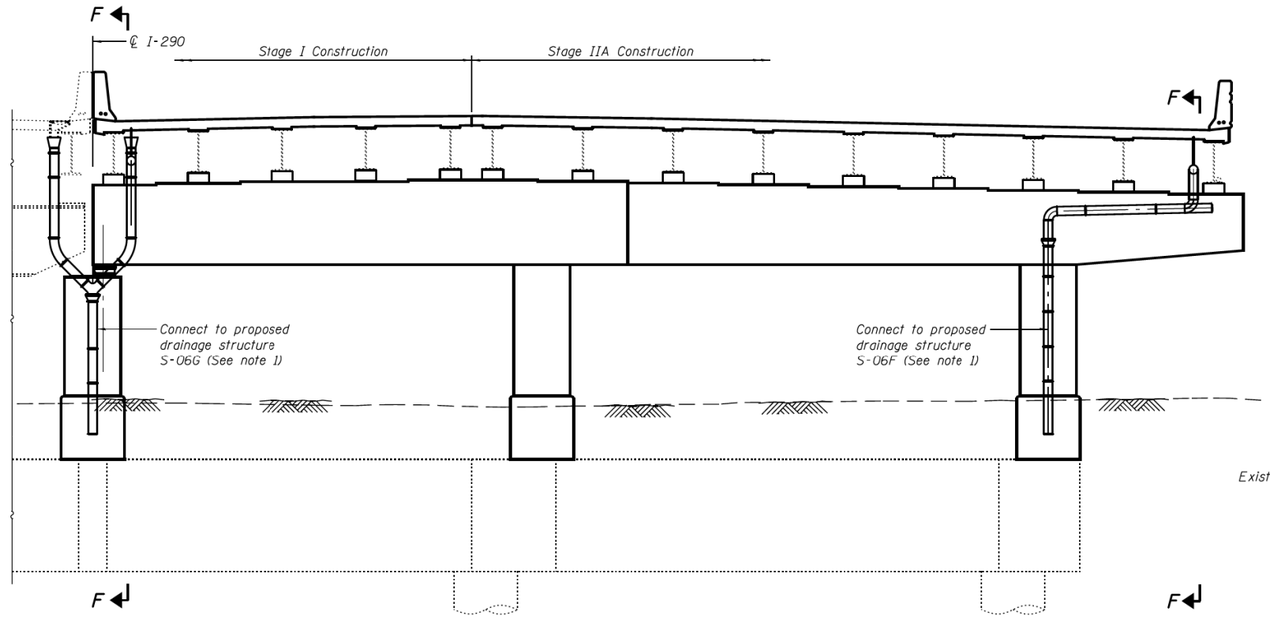

ELEVATION PIER C12
(Looking West)

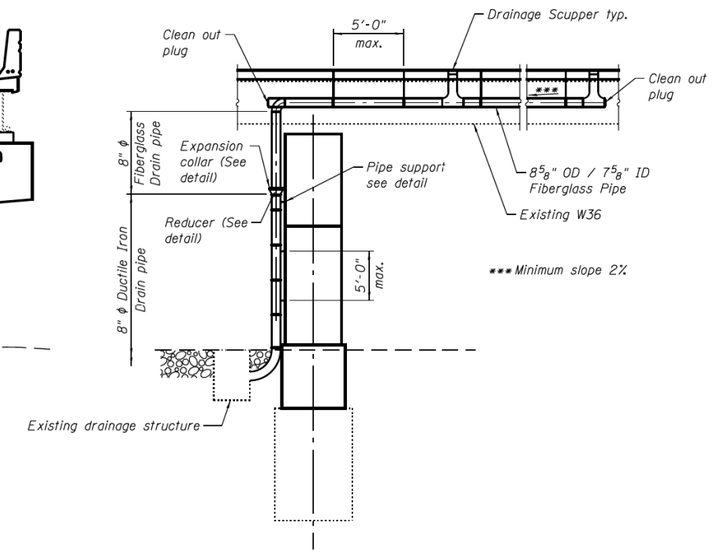

SECTION F-F

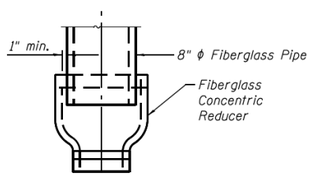

REDUCER DETAIL

SECTION G-G

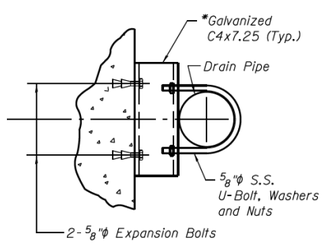

PLAN

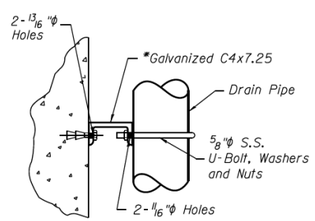

ELEVATION

PIPE SUPPORT DETAIL

*Provide curved C6x8.2 to fit Round Pier Columns where needed

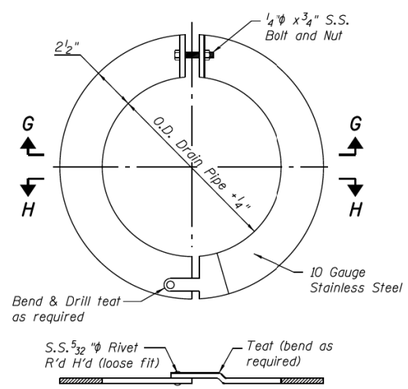

SECTION H-H

DETAIL OF EXPANSION COLLAR

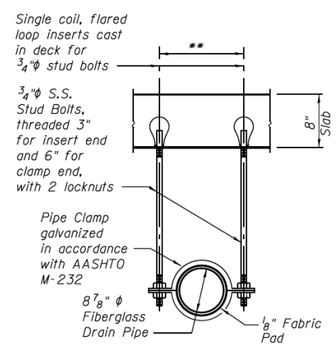

PIPE SUPPORT DETAIL

** Dimension as required by Pipe Clamp

Notes:

1. Drainage system shall connect to drainage structure. See drainage schedule for stationing and offsets of drainage structure.
2. Contractor shall field verify existing scuppers, pipes and drainage structures prior to any shop drawings submittal.
3. S.S. denotes Stainless Steel.

BILL OF MATERIAL

Item	Unit	Quantity
Drainage System	L. Sum	0.7

0160461-60X78-S078-DRN.dgn

PARSONS BRINCKERHOFF	USER NAME = poteld	DESIGNED - HA	REVISED -	STATE OF ILLINOIS DEPARTMENT OF TRANSPORTATION	DRAINAGE SYSTEM DETAILS – PIER C12 STRUCTURE NO. 016–0461	F.A.I. RTE.	SECTION	COUNTY	TOTAL SHEETS	SHEET NO.
		CHECKED - HA	REVISED -			90/94/290	2014-004 R&B (WB)	COOK	706	355
	PLOT SCALE = N.T.S.	DRAWN - DCP	REVISED -					CONTRACT NO. 60X78		
	PLOT DATE = 3/23/2016	CHECKED - JIG	REVISED -		SHEET NO. S2-78 OF S2-145 SHEETS		ILLINOIS	FED. AID PROJECT		

HBM ENGINEERING GROUP, LLC	USER NAME = ahmad.issa	DESIGNED -	REVISED -	STATE OF ILLINOIS DEPARTMENT OF TRANSPORTATION	EXISTING RECORD DRAWINGS	F.A.I. RTE.	SECTION	COUNTY	TOTAL SHEETS	SHEET NO.
		CHECKED -	REVISED -			90/94/290	2014-013R&B-R	COOK	1972	1720
	PLOT SCALE = N.T.S	DRAWN -	REVISED -					CONTRACT NO. 60X93		
	PLOT DATE = 7/26/2018	CHECKED - MI, MAI	REVISED -				ILLINOIS	FED. AID PROJECT		

FILE NAME: pw:\\617479-PWINT.aecomonline.local:AECOM_DS02_NA\Documents\01 Americas\Transportation\60269938 Circle\Phase_II\000_CAD\008_Structural\Structure_016-1718\Existing Plans\33906-60X93-SXX-Existing142

2:19:30 PM

FOR INFORMATION ONLY

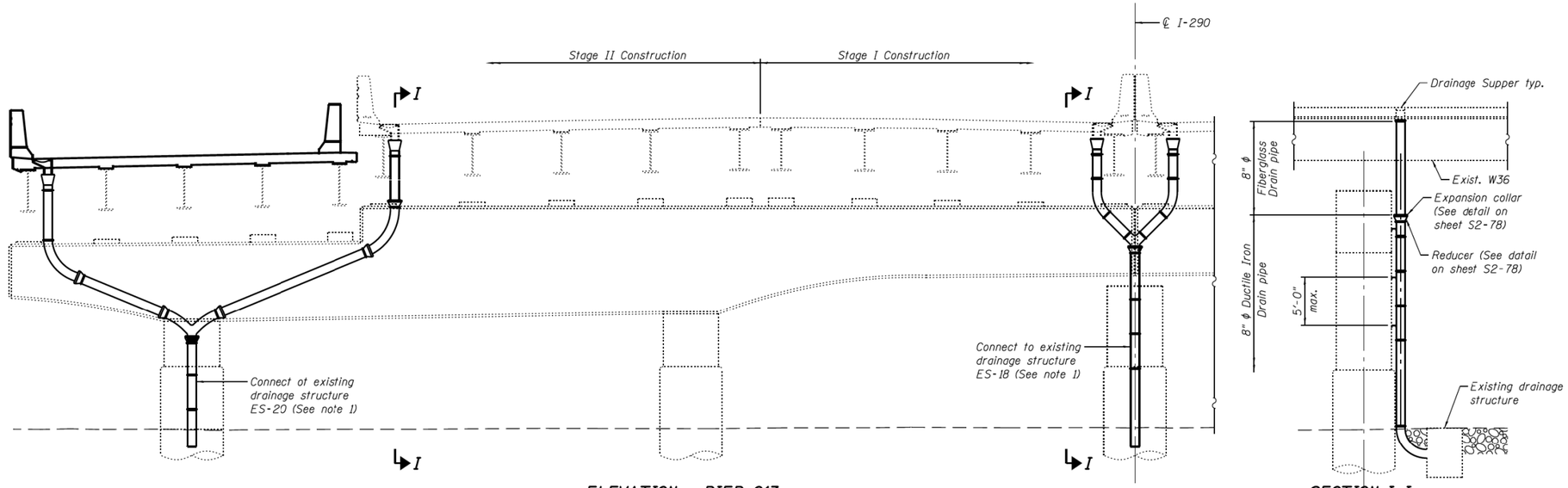

ELEVATION - PIER C13
(Looking East)

SECTION I-I

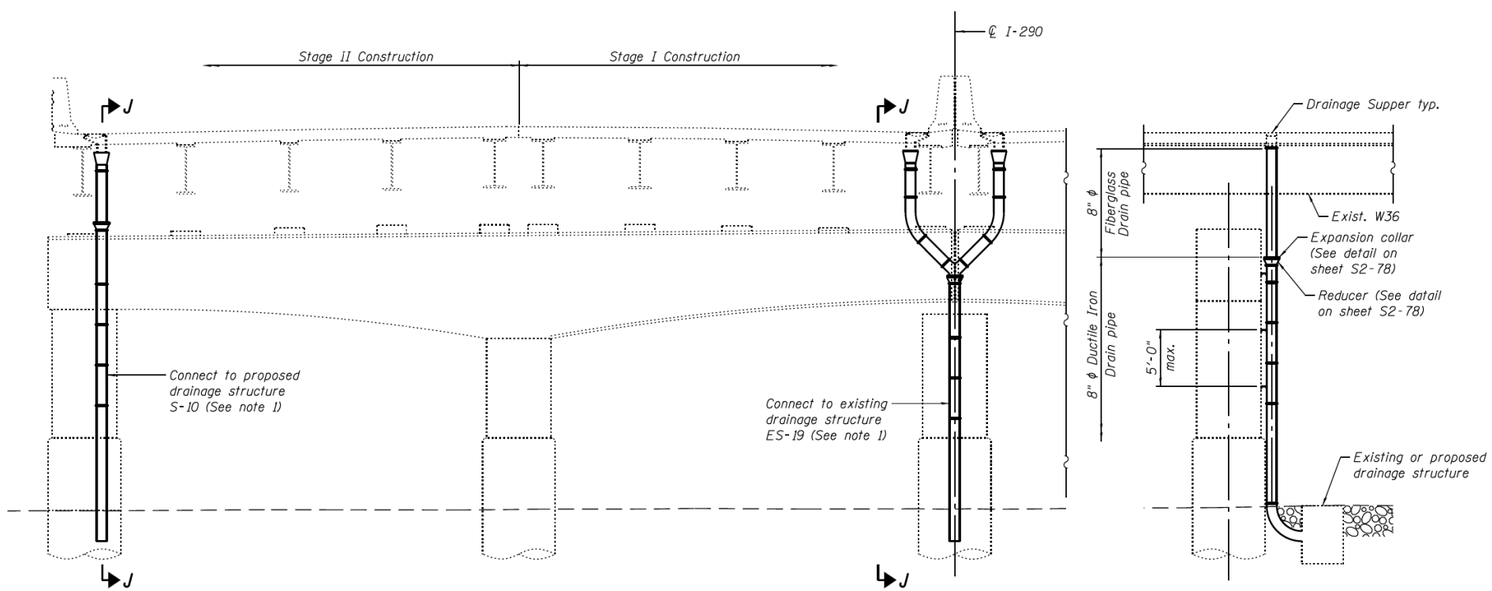

ELEVATION - PIER C14
(Looking East)

SECTION J-J

Notes:

1. Drainage system shall connect to an existing drainage structure. See drainage schedule for stationing and offsets of existing drainage structure.
2. Contractor shall field verify existing scuppers, pipes and drainage structures prior to any shop drawings submittal.

0160461-60X78-S079-DRN.dgn

PARSONS BRINCKERHOFF	USER NAME = poteld	DESIGNED - HA	REVISED -	STATE OF ILLINOIS DEPARTMENT OF TRANSPORTATION	DRAINAGE SYSTEM DETAILS – PIER C13 & C14 STRUCTURE NO. 016–0461	F.A.I. RTE.	SECTION	COUNTY	TOTAL SHEETS	SHEET NO.
		CHECKED - HA	REVISED -			90/94/290	2014-004 R&B (WB)	COOK	706	356
	PLOT SCALE = N.T.S.	DRAWN - DE	REVISED -					CONTRACT NO. 60X78		
	PLOT DATE = 3/23/2016	CHECKED - JIG	REVISED -		SHEET NO. S2-79 OF S2-145 SHEETS			ILLINOIS FED. AID PROJECT		

HBM ENGINEERING GROUP, LLC	USER NAME = ahmad.issa	DESIGNED -	REVISED -	STATE OF ILLINOIS DEPARTMENT OF TRANSPORTATION	EXISTING RECORD DRAWINGS	F.A.I. RTE.	SECTION	COUNTY	TOTAL SHEETS	SHEET NO.
		CHECKED -	REVISED -			90/94/290	2014-013R&B-R	COOK	1972	1721
	PLOT SCALE = N.T.S	DRAWN -	REVISED -					CONTRACT NO. 60X93		
	PLOT DATE = 7/26/2018	CHECKED - MI, MAI	REVISED -					ILLINOIS FED. AID PROJECT		

FILE NAME: pw:\\617479-PWINT.aecomonline.local:AECOM_DS02_NA\Documents\01 Americas\Transportation\60269938 Circle\Phase_II\000_CAD\008_Structural\Structure_016-1718\Existing Plans\33906-60X93-SXX-Existing143
2:19:37 PM

FOR INFORMATION ONLY

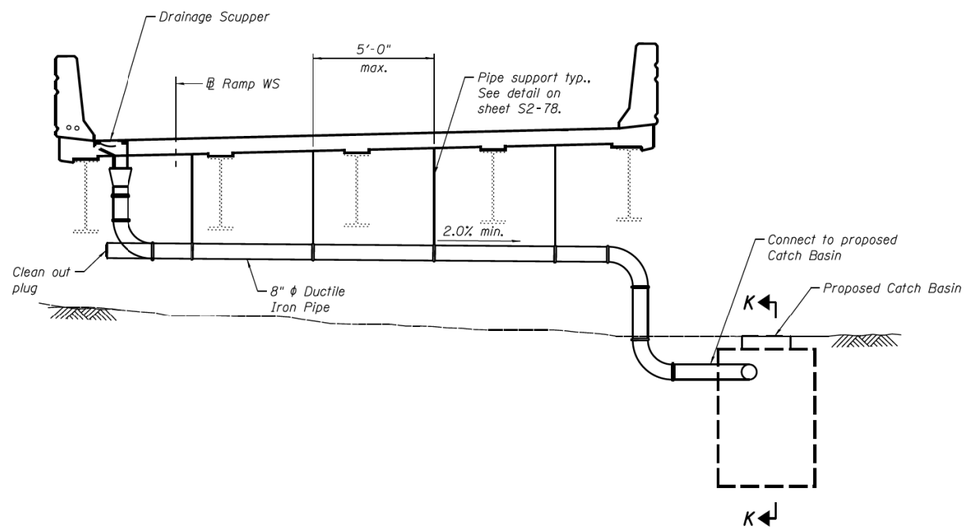

PIER 14N - ELEVATION

(Looking East)

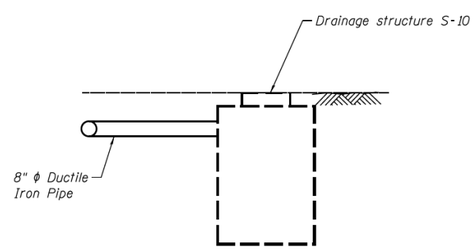

SECTION K-K

Notes:

1. Drainage system shall connect to an proposed drainage structure. See drainage schedule for stationing and offsets of proposed drainage structure.
2. Contractor shall field verify existing scuppers, pipes and drainage structures prior to any shop drawings submittal.

0160461-60X78-S080-DRN.dgn

PARSONS BRINCKERHOFF	USER NAME = poteld	DESIGNED - HA	REVISED -	STATE OF ILLINOIS DEPARTMENT OF TRANSPORTATION	DRAINAGE SYSTEM DETAILS – PIER 14N STRUCTURE NO. 016–0461	F.A.I. RTE.	SECTION	COUNTY	TOTAL SHEETS	SHEET NO.
		CHECKED - HA	REVISED -			90/94/290	2014-004 R&B (WB)	COOK	706	357
	PLOT SCALE = N.T.S.	DRAWN - DE	REVISED -					CONTRACT NO. 60X78		
	PLOT DATE = 3/23/2016	CHECKED - JIG	REVISED -		SHEET NO. S2-80 OF S2-145 SHEETS		ILLINOIS	FED. AID PROJECT		

HBM ENGINEERING GROUP, LLC	USER NAME = ahmad.issa	DESIGNED -	REVISED -	STATE OF ILLINOIS DEPARTMENT OF TRANSPORTATION	EXISTING RECORD DRAWINGS	F.A.I. RTE.	SECTION	COUNTY	TOTAL SHEETS	SHEET NO.
		CHECKED -	REVISED -			90/94/290	2014-013R&B-R	COOK	1972	1722
	PLOT SCALE = N.T.S	DRAWN -	REVISED -					CONTRACT NO. 60X93		
	PLOT DATE = 7/26/2018	CHECKED - MI, MAI	REVISED -				ILLINOIS	FED. AID PROJECT		

FILE NAME: pw:\\617479-PWINT.aecomonline.local:AECOM_DS02_NA\Documents\01 Americas\Transportation\60269938 Circle\Phase_II\000_CAD\008_Structural\Structure_016-1718\Existing Plans\33906-60X93-SXX-Existing144

2:19:46 PM

FOR INFORMATION ONLY

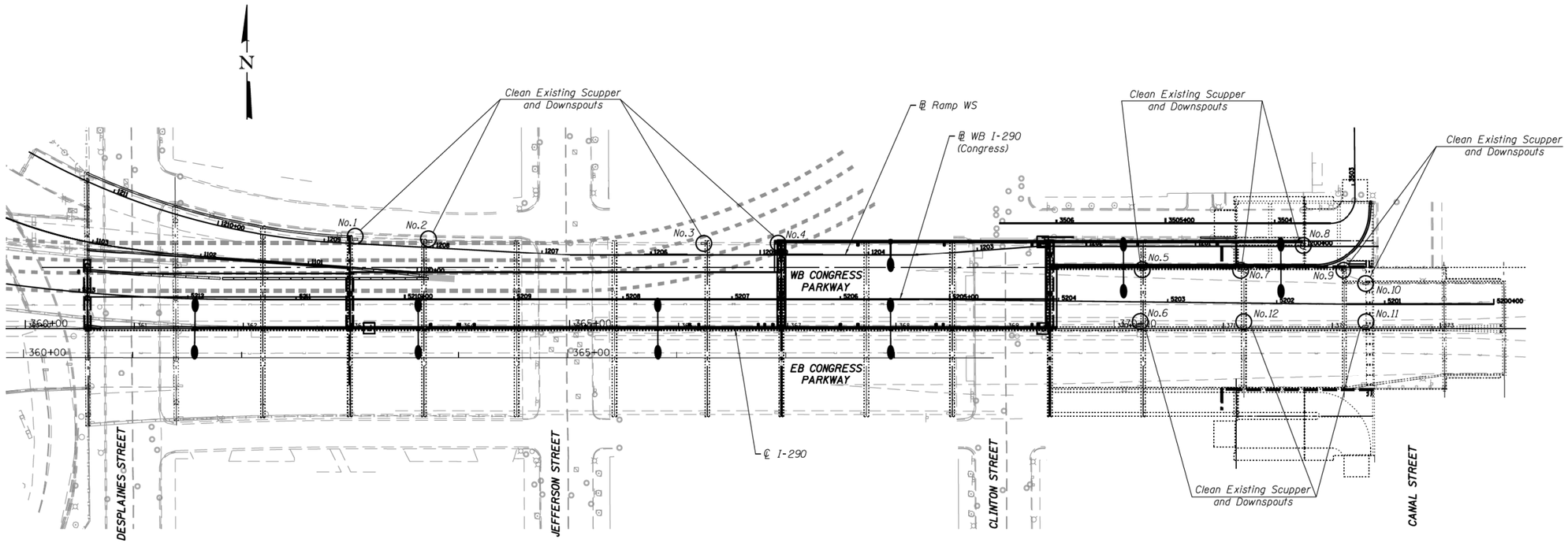

PLAN

BBRIDGE SCUPPER STATION/OFFSET

Scupper No.	Station	Offset
1	363+03.48	82.50' Lt.
2	363+71.56	80.58' Lt.
3	366+23.18	78.55' Lt.
4	366+91.37	78.77' Lt.
5	370+25.75	54.03' Lt.
6	370+2.87	2.86' Lt.
7	371+15.93	53.39' Lt.
8	371+72.86	76.23' Lt.
9	372+10.56	53.53' Lt.
10	372+31.51	41.33' Lt.
11	372+31.45	2.02' Lt.
12	371+18.22	2.73' Lt.

Note:

1. Bridge scupper Station/Offset are measured along ℄ I-290.

BILL OF MATERIAL

Item	Unit	Quantity
Cleaning Bridge Scuppers and Downspouts	Each	12

0160461-60X78-5081-DRN.dgn

PARSONS BRINCKERHOFF	USER NAME = poteld	DESIGNED -	REVISED -	STATE OF ILLINOIS DEPARTMENT OF TRANSPORTATION	CLEANING BRIDGE SCUPPERS AND DOWNSPOUTS STRUCTURE NO. 016-0461	F.A.I. RTE.	SECTION	COUNTY	TOTAL SHEETS	SHEET NO.
		CHECKED -	REVISED -			90/94/290	2014-004 R&B (WB)	COOK	706	358
	PLOT SCALE = N.T.S.	DRAWN - DCP	REVISED -					CONTRACT NO. 60X78		
	PLOT DATE = 3/23/2016	CHECKED - JIG	REVISED -		SHEET NO. S2-81 OF S2-145 SHEETS			ILLINOIS FED. AID PROJECT		

HBM ENGINEERING GROUP, LLC	USER NAME = ahmad.issa	DESIGNED -	REVISED -	STATE OF ILLINOIS DEPARTMENT OF TRANSPORTATION	EXISTING RECORD DRAWINGS	F.A.I. RTE.	SECTION	COUNTY	TOTAL SHEETS	SHEET NO.
		CHECKED -	REVISED -			90/94/290	2014-013R&B-R	COOK	1972	1723
	PLOT SCALE = N.T.S	DRAWN -	REVISED -					CONTRACT NO. 60X93		
	PLOT DATE = 7/26/2018	CHECKED - MI, MAI	REVISED -					ILLINOIS FED. AID PROJECT		

FILE NAME: pw:\\617479-PWINT.aecomonline.local:AECOM_DS02_NA\Documents\01 Americas\Transportation\60269938 Circle\Phase_II\000_CAD\008_Structural\Structure_016-1718\Existing Plans\33906-60X93-SXX-Existing145

2:19:53 PM

FOR INFORMATION ONLY

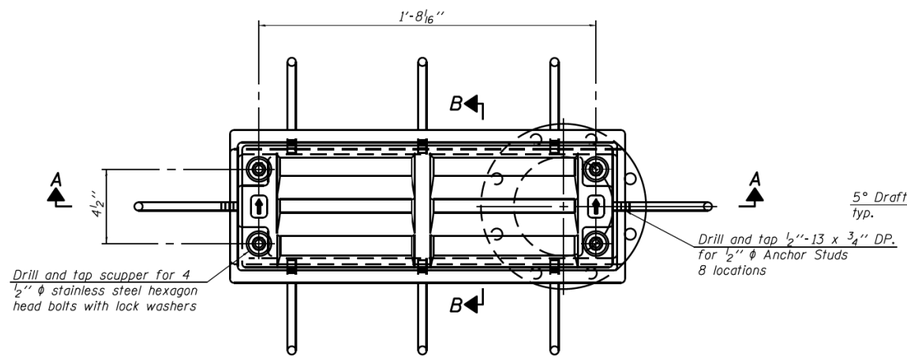

PLAN

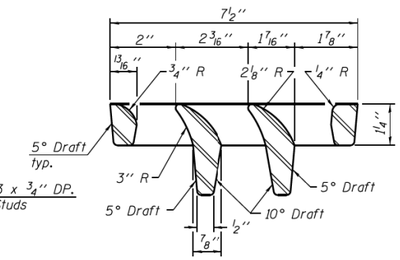

VANE GRATE DETAIL

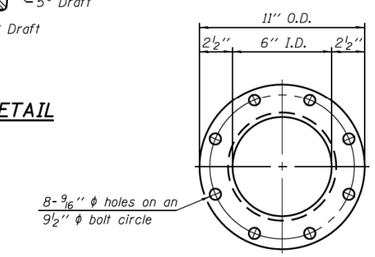

Notes:

All cast iron parts shall be gray iron conforming to the requirements of AASHTO M 105, Class 35B.

Bolts, anchor studs, washers and nuts shall conform to the requirements of ASTM A 307 and shall be galvanized according to AASHTO M 232.

Downspouts located on the exterior side of a painted steel fascia beam shall be painted with the finish coat specified for the exterior side of the fascia beam.

As an alternate, bolts, anchor studs, washers and nuts may be stainless steel according to Article 1006.29(d) of the Standard Specifications.

Structural steel weldments of equal sections and of the same configuration may be substituted for the cast iron scupper frame. Fillet or full penetration welds shall be used for the weldments. Details shall be submitted to the Engineer for approval. Structural steel weldments shall not be substituted for the cast iron scupper grate. Structural steel frames and downspouts shall be galvanized according to AASHTO M111.

The Contractor shall take appropriate measures to assure that Protective Coat is not applied to the scupper.

Cost of the Grate, Frame, Downspout, Anchor Studs, Bolts, Washers and Nuts including complete installation of the scupper shall be paid for at the contract unit price each for Drainage Scupper, DS-12.

Alternate fiberglass downspout conforming to ASTM D 2996 with a short-time rupture strength hoop tensile stress of 30,000 psi min. may be used in lieu of the cast iron or steel equivalent.

* Length of downspout to be coordinated with Drainage System

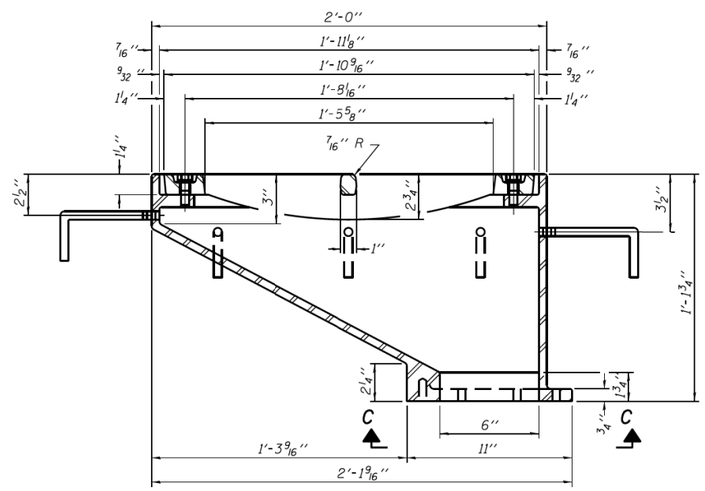

SECTION A-A

See sheet S2-57, S2-60 & S2-65 for scupper location relative to parapet.

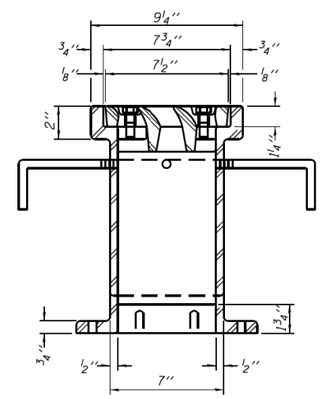

SECTION B-B

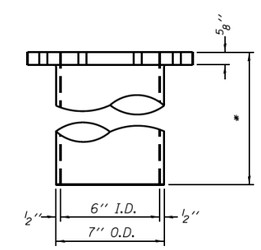

DOWNSPOUT

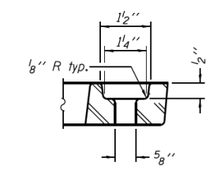

BOLT HOLE DETAIL

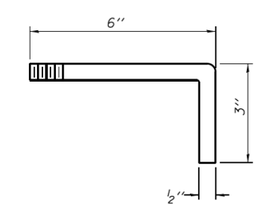

ANCHOR STUD DETAIL

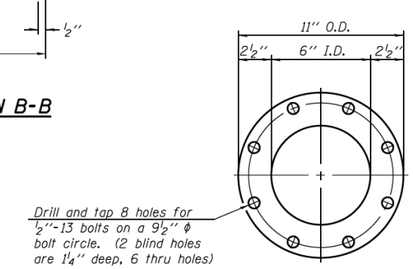

VIEW C-C

BILL OF MATERIAL

ITEM	UNIT	QUANTITY
Drainage Scupper, DS-12	Each	21

DS-12 7-1-10

0160461-60X78-S082-SCP.dgn

PARSONS BRINCKERHOFF	USER NAME = poteld	DESIGNED - PJL	REVISED -	STATE OF ILLINOIS DEPARTMENT OF TRANSPORTATION	DRAINAGE SCUPPER, DS-12 STRUCTURE NO. 016-0461	F.A.I. RTE.	SECTION	COUNTY	TOTAL SHEETS	SHEET NO.
		CHECKED - AH	REVISED -			90/94/290	2014-004 R&B (WB)	COOK	706	359
	PLOT SCALE = N.T.S.	DRAWN - DCP	REVISED -					CONTRACT NO. 60X78		
	PLOT DATE = 3/23/2016	CHECKED - JIG	REVISED -		SHEET NO. S2-82 OF S2-145 SHEETS		ILLINOIS	FED. AID PROJECT		

HBM ENGINEERING GROUP, LLC	USER NAME = ahmad.issa	DESIGNED -	REVISED -	STATE OF ILLINOIS DEPARTMENT OF TRANSPORTATION	EXISTING RECORD DRAWINGS	F.A.I. RTE.	SECTION	COUNTY	TOTAL SHEETS	SHEET NO.
		CHECKED -	REVISED -			90/94/290	2014-013R&B-R	COOK	1972	1724
	PLOT SCALE = N.T.S	DRAWN -	REVISED -					CONTRACT NO. 60X93		
	PLOT DATE = 7/26/2018	CHECKED - MI, MAI	REVISED -				ILLINOIS	FED. AID PROJECT		

FILE NAME: pw:\\617479-PWINT.aecomonline.local:AECOM_DS02_NA\Documents\01 Americas\Transportation\60269938 Circle\Phase_II\000_CAD\008_Structural\Structure_016-1718\Existing Plans\33906-60X93-SXX-Existing146

2:20:02 PM

FOR INFORMATION ONLY

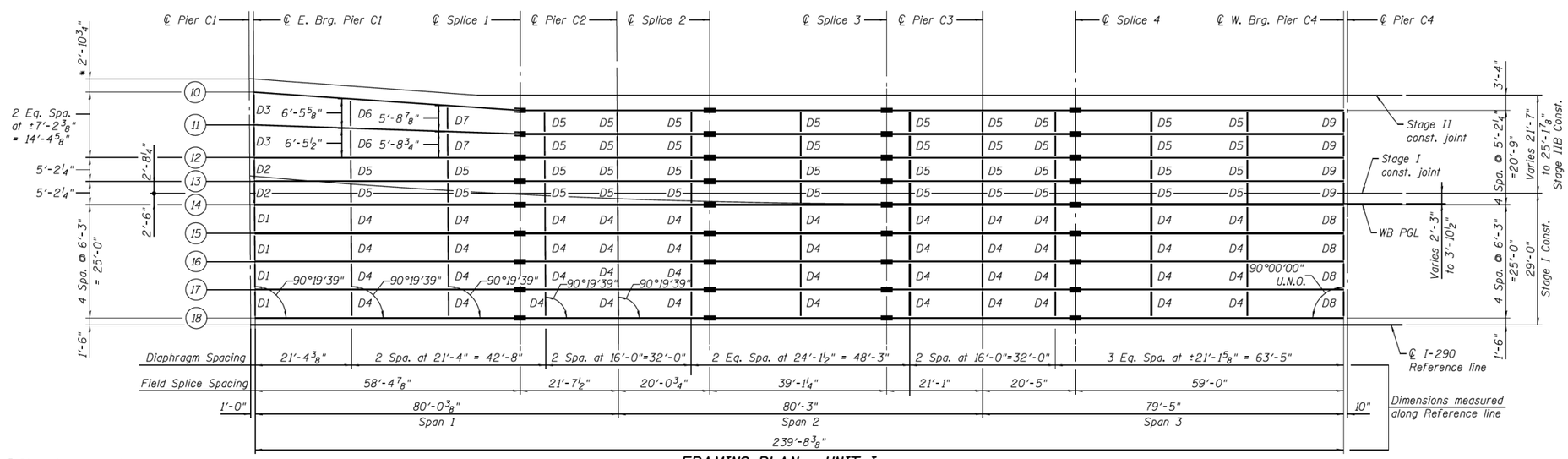

* Dimension shown at ℄ E. Brg. Pier C1

FRAMING PLAN - UNIT I

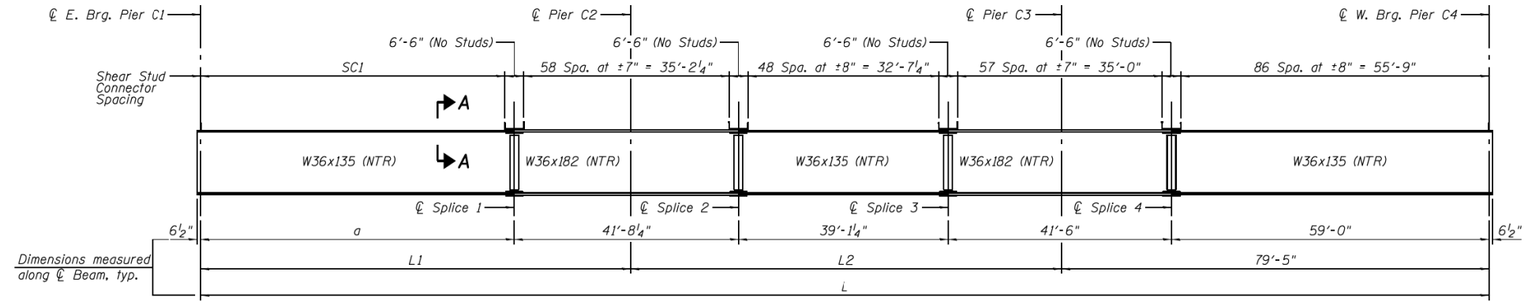

BEAM ELEVATION

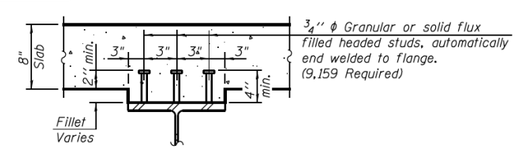

SECTION A-A

BEAM DIMENSIONS

Beam	L	L1	L2	a
10	240'-1 5/8"	80'-2 3/8"	80'-6 1/4"	58'-10 1/8"
11	239'-11 7/8"	80'-1"	80'-5 7/8"	58'-8 3/8"
12	239'-10 7/8"	80'-0 3/8"	80'-5 1/2"	58'-7 3/8"
13	239'-10 1/2"	80'-0 3/8"	80'-5 1/8"	58'-7"
14	239'-10 1/4"	80'-0 3/8"	80'-4 7/8"	58'-6 3/4"
15	239'-9 3/4"	80'-0 3/8"	80'-4 3/8"	58'-6 1/4"
16	239'-9 3/8"	80'-0 3/8"	80'-4"	58'-5 7/8"
17	239'-8 7/8"	80'-0 3/8"	80'-3 1/2"	58'-5 3/8"
18	239'-8 1/2"	80'-0 3/8"	80'-3 1/8"	58'-5"

STUD SHEAR CONNECTOR SPACING

Beam	SC1
10	86 Spa. at ±8" = 55'-7 1/8"
11	86 Spa. at ±8" = 52'-2 3/8"
12	85 Spa. at ±8" = 52'-1 3/8"
13	85 Spa. at ±8" = 52'-1"
14	85 Spa. at ±8" = 52'-0 3/4"
15	85 Spa. at ±8" = 52'-0 1/4"
16	85 Spa. at ±8" = 51'-11 7/8"
17	85 Spa. at ±8" = 51'-11 3/8"
18	85 Spa. at ±8" = 55'-2"

Notes:

See sheet S2-84 for moment tables and reaction tables.

See sheet S2-85 for bolted field splice details and diaphragms details.

All beams and splice plates shall be AASHTO M270 Grade 50.

All diaphragms, angles, fill plates and connecting plates shall be AASHTO M270, Grade 50.

All diaphragms shall be installed as steel is erected and secured with erection pins and bolts except as otherwise noted. Individual diaphragms at supports may be temporarily disconnected to install bearing anchor rods.

Load carrying components designated "NTR" shall conform to the Impact Testing Requirement, Zone 2.

All structural steel shall be hot dipped galvanized. Cost included with Furnishing and Erecting Structural Steel.

0160461-60X78-S083-FRM.dgn

PARSONS BRINCKERHOFF	USER NAME = poteld	DESIGNED - LFC	REVISED -	STATE OF ILLINOIS DEPARTMENT OF TRANSPORTATION	FRAMING PLAN – UNIT I STRUCTURE NO. 016–0461	F.A.I. RTE.	SECTION	COUNTY	TOTAL SHEETS	SHEET NO.
		CHECKED - PJL	REVISED -			90/94/290	2014-004 R&B (WB)	COOK	706	360
	PLOT SCALE = N.T.S.	DRAWN - LFC	REVISED -					CONTRACT NO. 60X78		
	PLOT DATE = 3/23/2016	CHECKED - JIG	REVISED -		SHEET NO. S2-83 OF S2-145 SHEETS		ILLINOIS FED. AID PROJECT			

HBM ENGINEERING GROUP, LLC	USER NAME = ahmad.issa	DESIGNED -	REVISED -	STATE OF ILLINOIS DEPARTMENT OF TRANSPORTATION	EXISTING RECORD DRAWINGS	F.A.I. RTE.	SECTION	COUNTY	TOTAL SHEETS	SHEET NO.
		CHECKED -	REVISED -			90/94/290	2014-013R&B-R	COOK	1972	1725
	PLOT SCALE = N.T.S	DRAWN -	REVISED -					CONTRACT NO. 60X93		
	PLOT DATE = 7/26/2018	CHECKED - MI, MAI	REVISED -				ILLINOIS	FED. AID PROJECT		

FILE NAME: pw:\\617479-PWINT.aecomonline.local:AECOM_DS02_NA\Documents\01 Americas\Transportation\60269938 Circle\Phase_II\000_CAD\008_Structural\Structure_016-1718\Existing Plans\33906-60X93-SXX-Existing147

2:20:10 PM

FOR INFORMATION ONLY

INTERIOR BEAM MOMENT TABLE - UNIT I						
		0.4 Sp. 1	Pier C2	0.5 Sp. 2	Pier C3	0.6 Sp. 3
I_s	(in^4)	7,800	11,300	7,800	11,300	7,800
$I_c(n)$	(in^4)	22,815	-	22,815	-	22,815
$I_c(3n)$	(in^4)	16,546	-	16,546	-	16,546
$I_c(cr)$	(in^4)	-	14,579	-	14,579	-
S_s	(in^3)	439	623	439	623	439
$S_c(n)$	(in^3)	686	-	686	-	686
$S_c(3n)$	(in^3)	615	-	615	-	615
$S_c(cr)$	(in^3)	-	707	-	707	-
DC1	(k/')	0.80	0.85	0.80	0.85	0.80
M_{DC1}	('k)	388	560	102	564	380
DC2	(k/')	0.13	0.13	0.06	0.06	0.06
M_{DC2}	('k)	69	73	-2	36	34
DW	(k/')	0.13	0.14	0.14	0.14	0.14
M_{DW}	('k)	68	92	18	93	67
M_{LL+IM}	('k)	838	902	694	903	826
M_U (Strength I)	('k)	2,140	2,508	1,367	2,469	2,064
$\phi_f M_n$	('k)	3,333	3,624	3,473	3,624	3,346
f_s DC1	(ksi)	10.6	10.8	2.8	10.9	10.4
f_s DC2	(ksi)	1.3	1.2	0.0	0.6	0.7
f_s DW	(ksi)	1.3	1.6	0.4	1.6	1.3
f_s (LL+IM)	(ksi)	14.7	15.3	12.1	15.3	14.4
f_s (Service II)	(ksi)	32.3	33.5	18.9	33.0	31.2
$0.95R_hF_{yf}$	(ksi)	47.5	47.5	47.5	47.5	47.5
f_s (Total)(Strength I)	(ksi)	42.6	44.3	25.4	43.7	41.1
$\phi_f F_n$	(ksi)	-	-	-	-	-
V_f	(k)	29.7	32.6	26.5	32.2	27.7

INTERIOR BEAM REACTION TABLE - UNIT I					
		Pier C1	Pier C2	Pier C3	Pier C4
R_{DC1}	(k)	25.6	73.1	73.2	25.5
R_{DC2}	(k)	4.2	9.2	5.1	2.1
R_{DW}	(k)	4.3	12.1	12.1	4.3
R_{LL+IM}	(k)	84.0	136.4	136.7	83.7
R_{Total}	(k)	118.2	230.8	227.0	115.6

TOP OF BEAM ELEVATIONS

(For fabrication only)

	Beam 10	Beam 11	Beam 12	Beam 13	Beam 14	Beam 15	Beam 16	Beam 17	Beam 18
℄ E. Brg. Pier C1	607.88	608.20	608.53	608.76	608.99	609.27	609.55	609.83	610.11
℄ Splice 1	608.58	608.81	609.04	609.27	609.50	609.78	610.06	610.34	610.61
℄ Pier C2	608.66	608.89	609.12	609.35	609.58	609.86	610.14	610.41	610.69
℄ Splice 2	608.74	608.97	609.20	609.43	609.66	609.93	610.21	610.49	610.76
℄ Splice 3	609.48	609.63	609.76	609.89	610.03	610.21	610.39	610.58	610.76
℄ Pier C3	609.80	609.93	610.05	610.17	610.29	610.44	610.58	610.73	610.87
℄ Splice 4	610.12	610.23	610.34	610.44	610.55	610.66	610.77	610.87	610.98
℄ W. Brg. Pier C4	610.62	610.73	610.83	610.94	611.04	611.12	611.20	611.29	611.37

I_s, S_s: Non-composite moment of inertia and section modulus of the steel section used for computing f_s (Total-Strength I, and Service II) due to non-composite dead loads ($in.^4$ and $in.^3$).

$I_c(n)$, $S_c(n)$: Composite moment of inertia and section modulus of the steel and deck based upon the modular ratio, "n", used for computing f_s (Total-Strength I, and Service II) in uncracked sections due to short-term composite live loads ($in.^4$ and $in.^3$).

$I_c(3n)$, $S_c(3n)$: Composite moment of inertia and section modulus of the steel and deck based upon 3 times the modular ratio, "3n", used for computing f_s (Total-Strength I, and Service II) in uncracked sections, due to long-term composite (superimposed) dead loads ($in.^4$ and $in.^3$).

$I_c(cr)$, $S_c(cr)$: Composite moment of inertia and section modulus of the steel and longitudinal deck reinforcement, used for computing f_s (Total-Strength I and Service II) in cracked sections, due to both short-term composite live loads and long-term composite (superimposed) dead loads ($in.^4$ and $in.^3$).

DC1: Un-factored non-composite dead load (kips/ft.).

M_{DC1}: Un-factored moment due to non-composite dead load (kip-ft.).

DC2: Un-factored long-term composite (superimposed excluding future wearing surface) dead load (kips/ft.).

M_{DC2}: Un-factored moment due to long-term composite (superimposed excluding future wearing surface) dead load (kip-ft.).

DW: Un-factored long-term composite (superimposed future wearing surface only) dead load (kips/ft.).

M_{DW}: Un-factored moment due to long-term composite (superimposed future wearing surface only) dead load (kip-ft.).

M_{LL+IM}: Un-factored live load moment plus dynamic load allowance (impact) (kip-ft.).

M_U (Strength I): Factored design moment (kip-ft.).
$1.25\ (M_{DC1} + M_{DC2}) + 1.5\ M_{DW} + 1.75\ M_{LL+IM}$

$\phi_f M_n$: Compact composite positive moment capacity computed according to Article 6.10.7.1 or non-slender negative moment capacity according to Article A6.1.1 or A6.1.2 (kip-ft).

f_s DC1: Un-factored stress at edge of flange for controlling steel flange due to vertical non-composite dead loads as calculated below (ksi).
M_{DC1} / S_{nc}

f_s DC2: Un-factored stress at edge of flange for controlling steel flange due to vertical composite dead loads as calculated below (ksi).
$M_{DC2} / S_c(3n)$ or $M_{DC2} / S_c(cr)$ as applicable.

f_s DW: Un-factored stress at edge of flange for controlling steel flange due to vertical composite future wearing surface loads as calculated below (ksi).
$M_{DW} / S_c(3n)$ or $M_{DW} / S_c(cr)$ as applicable.

f_s (LL+IM): Un-factored stress at edge of flange for controlling steel flange due to vertical composite live load plus impact loads as calculated below (ksi).
$M_{LL+IM} / S_c(n)$ or $M_{LL+IM}/{}_cS$ (cr) as applicable.

f_s (Service II): Sum of stresses as computed below (ksi).
$f_{sDC1} + f_{sDC2} + f_{sDW} + 1.3\ f_s(_{LL+IM})$

$0.95R_hF_yf$: Composite stress capacity for Service II loading according to Article 6.10.4.2 (ksi).

f_s (Total)(Strength I): Sum of stresses as computed below on non-compact section (ksi).
$1.25\ (f_{sDC1} + f_{sDC2}) + 1.5\ f_{sDW} + 1.75\ f_s(_{LL+IM})$

$\phi_f F_n$: Non-Compact composite positive or negative stress capacity for Strength I loading according to Article 6.10.7 or 6.10.8 (ksi).

V_f: Maximum factored shear range in span computed according to Article 6.10.10.

0160461-60X78-S084-DET.dgn

PARSONS BRINCKERHOFF	USER NAME = poteld	DESIGNED - LFC	REVISED -	STATE OF ILLINOIS DEPARTMENT OF TRANSPORTATION	SUPERSTRUCTURE STEEL DETAILS I – UNIT I STRUCTURE NO. 016–0461	F.A.I. RTE.	SECTION	COUNTY	TOTAL SHEETS	SHEET NO.
		CHECKED - PJL	REVISED -			90/94/290	2014-004 R&B (WB)	COOK	706	361
	PLOT SCALE = N.T.S.	DRAWN - LFC	REVISED -					CONTRACT NO. 60X78		
	PLOT DATE = 4/25/2016	CHECKED - JIG	REVISED -		SHEET NO. S2-84 OF S2-145 SHEETS		ILLINOIS	FED. AID PROJECT		

HBM ENGINEERING GROUP, LLC	USER NAME = ahmad.issa	DESIGNED -	REVISED -	STATE OF ILLINOIS DEPARTMENT OF TRANSPORTATION	EXISTING RECORD DRAWINGS	F.A.I. RTE.	SECTION	COUNTY	TOTAL SHEETS	SHEET NO.
		CHECKED -	REVISED -			90/94/290	2014-013R&B-R	COOK	1972	1726
	PLOT SCALE = N.T.S	DRAWN -	REVISED -					CONTRACT NO. 60X93		
	PLOT DATE = 7/26/2018	CHECKED - MI, MAI	REVISED -				ILLINOIS	FED. AID PROJECT		

FILE NAME: pw:\\617479-PWINT.aecomonline.local:AECOM_DS02_NA\Documents\01 Americas\Transportation\60269938 Circle\Phase_II\000_CAD\008_Structural\Structure_016-1718\Existing Plans\33906-60X93-SXX-Existing148

2:20:18 PM

FOR INFORMATION ONLY

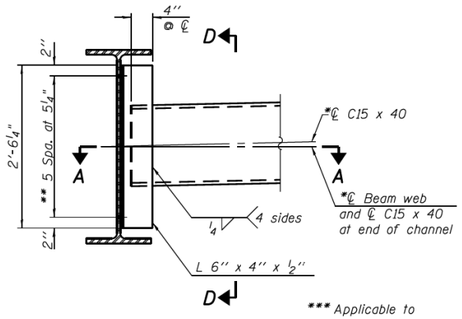

INTERIOR DIAPHRAGM

D4 (44 Required)
D5 (40 Required)
D6 (2 Required)
D7 (2 Required)

*** Applicable to Interior D5 Diaphragms Between Beams 13 & 14 Only (at 11 of the 40 D5 diaphragms)

Note:
Two hardened washers required for each set of oversized holes.
*Alternate channel C15x50 are permitted to facilitate material acquisition. Calculated weight of structural steel is based on the lighter section.
The alternate, if utilized, shall be provided at no additional cost to the Department.
**¾" ϕ HS bolts, 15/16" ϕ holes

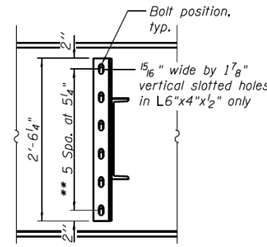

***SECTION D-D

At Beam 13 on
before placing
Stage IIB concrete slab

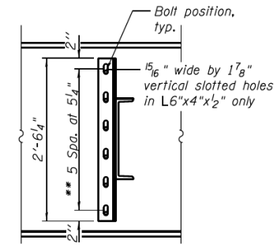

***SECTION D-D

At Beam 13 on
after placing
Stage IIB concrete slab

***SUGGESTED SEQUENCE OF CONSTRUCTION FOR INTERIOR DIAPHRAGMS AT STAGE CONSTRUCTION

1. Prior to Stage IIB deck work, connect diaphragm to Beam 14. Bolts in slots of Beam 13 and in diaphragm connection angle shall be finger tight until the Stage IIB pour is complete. Position slots so bolts start at one end with no concrete load and finish near the opposite end under deck load.
2. Set slab forms and place reinforcement.
3. Place Stage IIB concrete slab. Once beam 13 deflects, tighten bolts as required.

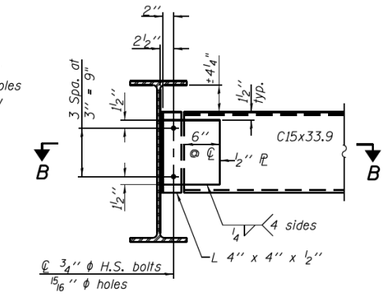

END DIAPHRAGM

D8 (4 Required)
D9 (4 Required)

Note:
Two hardened washers required for each set of oversized holes.

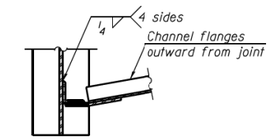

SECTION B-B

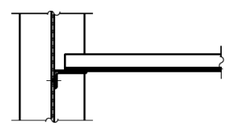

SECTION A-A

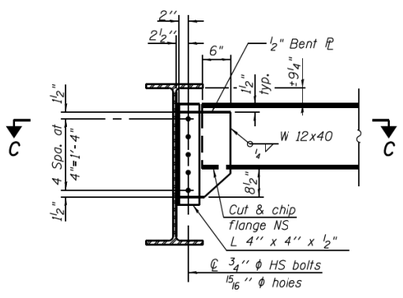

END DIAPHRAGM

D1 (4 Required)
D2 (2 Required)
D3 (2 Required)

Note:
Two hardened washers required for each set of oversized holes.

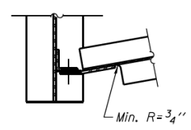

SECTION C-C

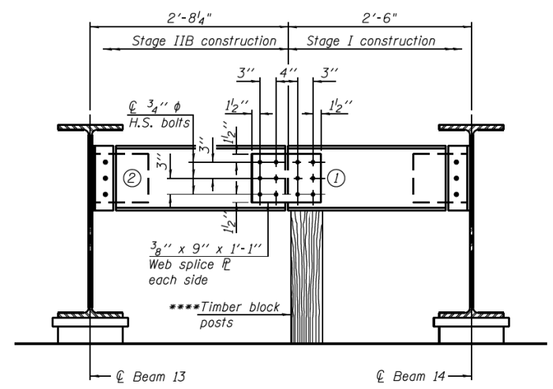

END DIAPHRAGM STAGE I AND IIB

(Looking East, 2 Required)
End diaphragm (D2) at Pier C4 shown,
end diaphragm (D9) at Pier C1 similiar

****Cost of Timber Block Posts is included with Structural Steel.

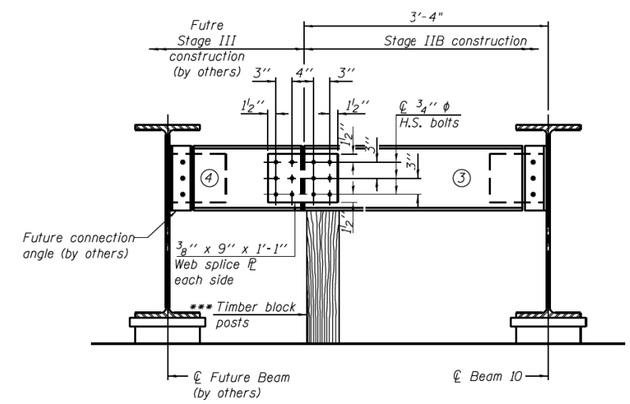

END DIAPHRAGM STAGE IIB AND FUTURE STAGE III

(Looking East, 1 Required)

END DIAPHRAGM STAGE CONSTRUCTION SEQUENCE

1.) Order diaphragm in two sections.
2.) Attach section ① of diaphragm to beam 14.
3.) Place timber block posts between section ① of diaphragm and pier bearing section.
4.) Attach section ② of diaphragm to both beam 13 and section ① of diaphragm during stage IIB construction with splice plates.
5.) Remove timber block posts.

END DIAPHRAGM STAGE CONSTRUCTION SEQUENCE

1.) Order diaphragm in two sections.
2.) Attach section ③ of diaphragm to beam 10.
3.) Place timber block posts between section ③ of diaphragm and pier bearing section.
4.) Attach section ④ of diaphragm to section ③ of diaphragm after stage IIB construction with splice plates.
5.) Timber block posts to remain in place and be removed as part of future contract.

0160461-60X78-S085-DET.dgn

PARSONS BRINCKERHOFF	USER NAME = poteld	DESIGNED - LFC	REVISED -	STATE OF ILLINOIS DEPARTMENT OF TRANSPORTATION	SUPERSTRUCTURE STEEL DETAILS III – UNIT I STRUCTURE NO. 016–0461	F.A.I. RTE.	SECTION	COUNTY	TOTAL SHEETS	SHEET NO.
		CHECKED - PJL	REVISED -			90/94/290	2014-004 R&B (WB)	COOK	706	362
	PLOT SCALE = N.T.S.	DRAWN - LFC	REVISED -			CONTRACT NO. 60X78				
	PLOT DATE = 4/25/2016	CHECKED - JIG	REVISED -		SHEET NO. S2-85 OF S2-145 SHEETS	ILLINOIS FED. AID PROJECT				

HBM ENGINEERING GROUP, LLC	USER NAME = ahmad.issa	DESIGNED -	REVISED -	STATE OF ILLINOIS DEPARTMENT OF TRANSPORTATION	EXISTING RECORD DRAWINGS	F.A.I. RTE.	SECTION	COUNTY	TOTAL SHEETS	SHEET NO.
		CHECKED -	REVISED -			90/94/290	2014-013R&B-R	COOK	1972	1727
	PLOT SCALE = N.T.S	DRAWN -	REVISED -			CONTRACT NO. 60X93				
	PLOT DATE = 7/26/2018	CHECKED - MI, MAI	REVISED -			ILLINOIS FED. AID PROJECT				

FILE NAME: pw:\\61179479-PW\INT.aecomonline.local:AECOM_DS02_NA\Documents\01 Americas\Transportation\60269938 Circle\Phase_II\000_CAD\008_Structural\Structure_016-1718\Existing Plans\33906-60X93-SXX-Existing149

2:20:28 PM

FOR INFORMATION ONLY

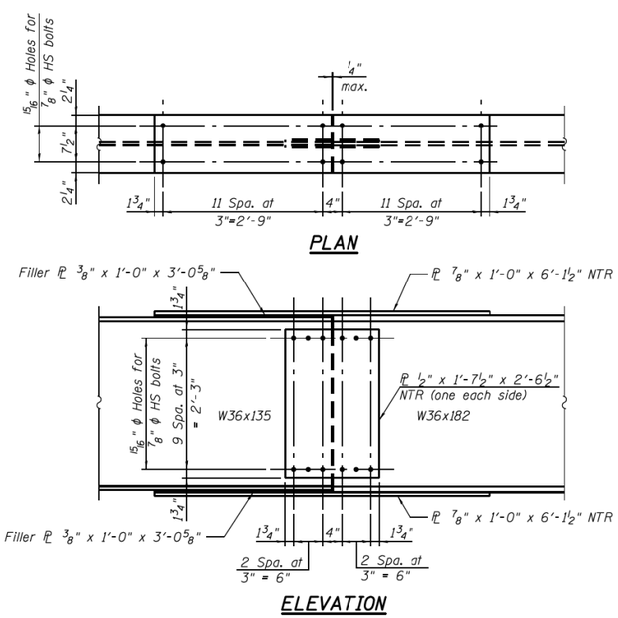

TYPICAL SPLICE DETAIL
(34 Required)

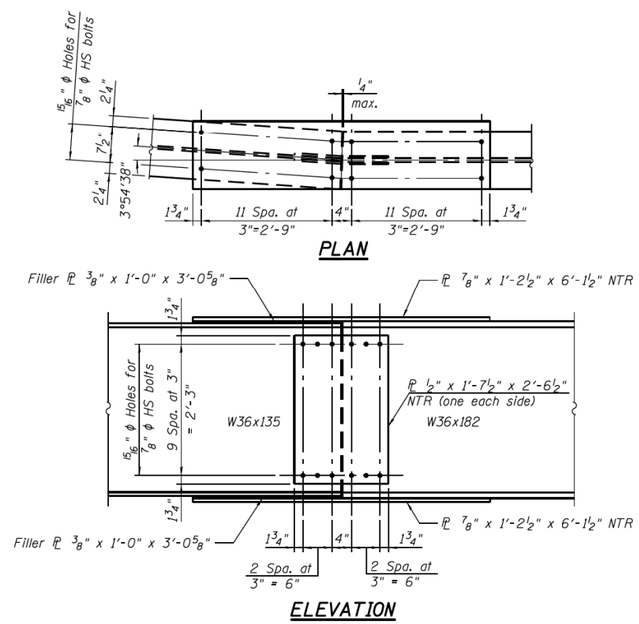

SPLICE DETAIL (BEAM 10, SPLICE 1)
(1 Required)

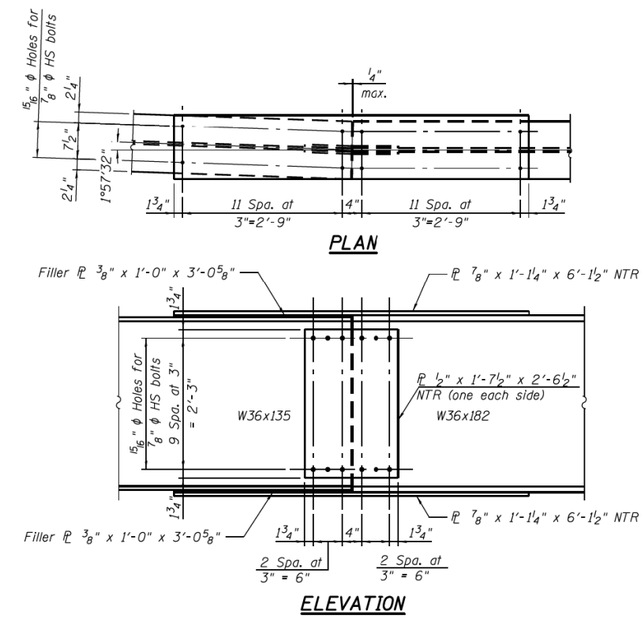

SPLICE DETAIL (BEAM 11, SPLICE 1)
(1 Required)

Note:
Load carrying components desingated "NTR" shall conform to the Impact Testing Requirement, Zone 2.

0160461-60X78-S086-DET.dgn

PARSONS BRINCKERHOFF	USER NAME = poteld	DESIGNED - LFC	REVISED -	STATE OF ILLINOIS DEPARTMENT OF TRANSPORTATION	SUPERSTRUCTURE STEEL DETAILS III – UNIT I STRUCTURE NO. 016–0461	F.A.I. RTE.	SECTION	COUNTY	TOTAL SHEETS	SHEET NO.
		CHECKED - PJL	REVISED -			90/94/290	2014-004 R&B (WB)	COOK	706	363
	PLOT SCALE = N.T.S.	DRAWN - LFC	REVISED -					CONTRACT NO. 60X78		
	PLOT DATE = 3/23/2016	CHECKED - JIG	REVISED -		SHEET NO. S2-86 OF S2-145 SHEETS		ILLINOIS	FED. AID PROJECT		

HBM ENGINEERING GROUP, LLC	USER NAME = ahmad.issa	DESIGNED -	REVISED -	STATE OF ILLINOIS DEPARTMENT OF TRANSPORTATION	EXISTING RECORD DRAWINGS	F.A.I. RTE.	SECTION	COUNTY	TOTAL SHEETS	SHEET NO.
		CHECKED -	REVISED -			90/94/290	2014-013R&B-R	COOK	1972	1728
	PLOT SCALE = N.T.S	DRAWN -	REVISED -					CONTRACT NO. 60X93		
	PLOT DATE = 7/26/2018	CHECKED - MI, MAI	REVISED -				ILLINOIS	FED. AID PROJECT		

FILE NAME: pw:\\617479-PWINT.aecomonline.local:AECOM_DS02_NA\Documents\01 Americas\Transportation\60269938 Circle\Phase_II\000_CAD\008_Structural\Structure_016-1718\Existing Plans\33906-60X93-SXX-Existing150

2:20:36 PM

FOR INFORMATION ONLY

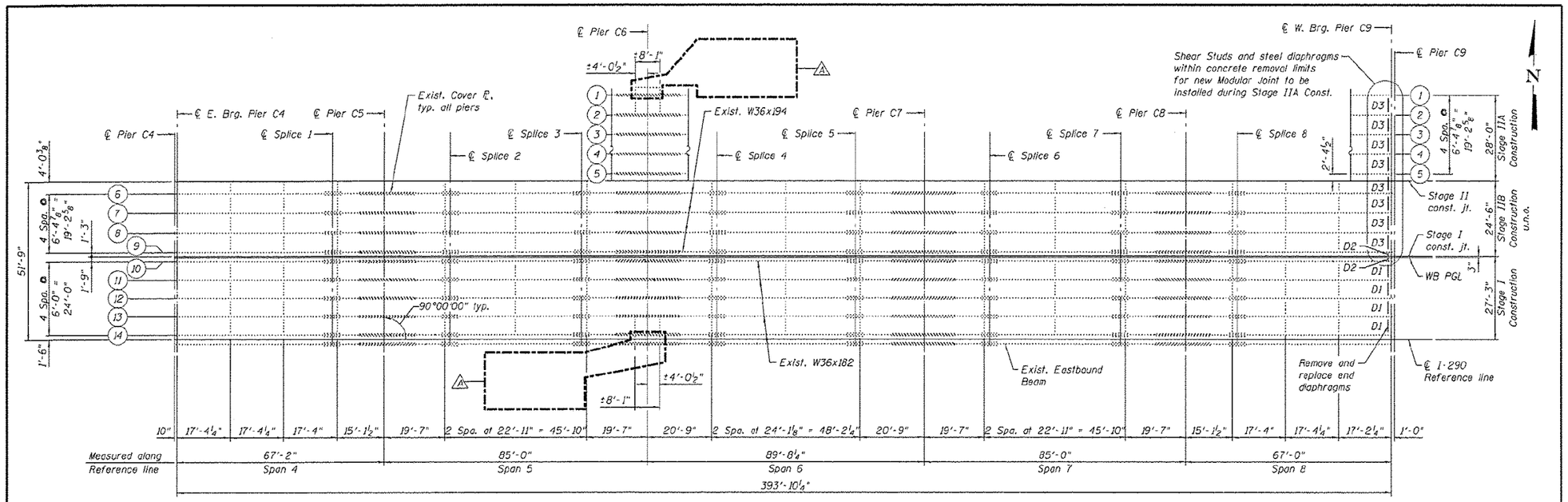

EXISTING FRAMING PLAN - UNIT II

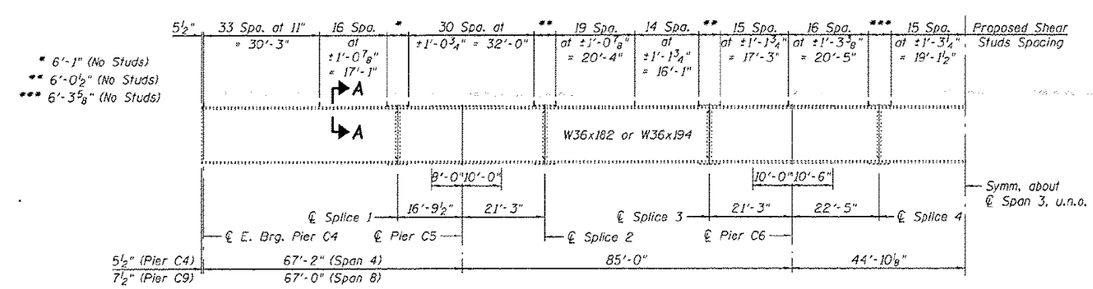

EXISTING BEAM ELEVATION - UNIT II

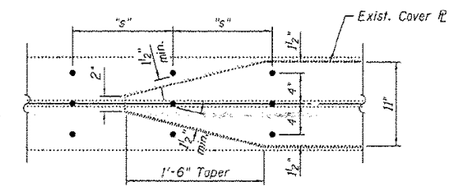

SHEAR STUDS AT ENDS OF COVER ℙ

Shear connector spacing, "s", may be adjusted up to 3" to maintain minimum clearances.

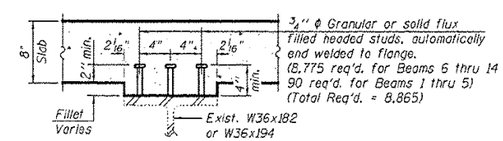

SECTION A-A

Notes:
For top of existing beam elevations and notes and tables, see sheet S2-88.
For diaphragm replacement details, see sheet S2-93.

PARSONS BRINCKERHOFF	USER NAME = pateld	DESIGNED - IJL	REVISED - △A 4/27/2016 JIG	STATE OF ILLINOIS DEPARTMENT OF TRANSPORTATION	FRAMING PLAN – UNIT II STRUCTURE NO. 016-0461	F.A.I. RTE.	SECTION	COUNTY	TOTAL SHEETS	SHEET NO.
		CHECKED - PJL	REVISED -			90/94/290	2014-004 R&B (WB)	COOK	706	364
	PLOT SCALE = N.T.S.	DRAWN - IJL	REVISED -					CONTRACT NO. 60X78		
	PLOT DATE = 5/16/2016	CHECKED - JIG	REVISED -		SHEET NO. S2-87 OF S2-145 SHEETS			ILLINOIS FED. AID PROJECT		

D160461-60X78-S087-FRM.dgn

HBM ENGINEERING GROUP, LLC	USER NAME = ahmad.issa	DESIGNED -	REVISED -	STATE OF ILLINOIS DEPARTMENT OF TRANSPORTATION	EXISTING RECORD DRAWINGS	F.A.I. RTE.	SECTION	COUNTY	TOTAL SHEETS	SHEET NO.
		CHECKED -	REVISED -			90/94/290	2014-013R&B-R	COOK	1972	1729
	PLOT SCALE = N.T.S	DRAWN -	REVISED -					CONTRACT NO. 60X93		
	PLOT DATE = 7/26/2018	CHECKED - MI, MAI	REVISED -					ILLINOIS FED. AID PROJECT		

FILE NAME: pw:\\617479-PWINT.aecomonline.local:AECOM_DS02_NA\Documents\01 Americas\Transportation\60269938 Circle\Phase_II\000_CAD\008_Structural\Structure_016-1718\Existing Plans\33906-60X93-SXX-Existing151

2:20:44 PM

FOR INFORMATION ONLY

INTERIOR BEAM MOMENT TABLE						
		0.4 Sp. 4 or 0.6 Sp. 8	Pier C5 or Pier C8	0.5 Sp. 5 or 0.5 Sp. 7	Pier C6 or Pier C7	0.5 Sp. 6
I_s	(in^4)	12100	15865	12100	16838	12100
$I_c(n)$	(in^4)	30740	19320	30740	20304	30740
$I_c(3n)$	(in^4)	21792	19320	21792	20304	21792
S_s	(in^3)	664	846	664	892	664
$S_c(n)$	(in^3)	977	1157	977	1201	977
$S_c(3n)$	(in^3)	866	1157	866	1201	866
ϱ	(k/')	0.879	0.920	0.879	0.931	0.879
$M\varrho$	('k)	268	523	237	598	290
$s\varrho$	(k/')	0.230	0.230	0.230	0.230	0.230
$M_s\varrho$	('k)	70	135	63	155	77
ML	('k)	435	416	450	479	475
MIM	('k)	113	103	107	113	111
$\frac{5}{3}[ML + I]$	('k)	913	865	928	987	977
M_a	('k)	1627	1980	1597	2262	1747
* M_u	('k)	2829		3455		3455
f_s ϱ non-comp	(ksi)	4.8	7.4	4.3	8.0	5.2
f_s ϱ (comp)	(ksi)	1.0	1.4	0.9	1.5	1.1
f_s $\frac{5}{3}[ML + M_I]$	(ksi)	11.2	9.0	11.4	9.9	12.0
f_s (Overload)	(ksi)	17.0	17.8	16.6	19.4	18.3
** f_s (Total)	(ksi)		23.1		25.2	
VR	(k)	54.5	58.7	41.9	57.2	41.9

* Compact section
** Braced non-compact and partially braced section

INTERIOR BEAM REACTION TABLE					
		Pier C4 & C9	Pier C5 & C8	Pier C6	Pier C7
$R\varrho$	(k)	28.3	94.0	106.6	99.4
RL	(k)	45.4	59.0	62.4	62.4
R_I	(k)	11.8	14.7	14.7	14.7
R_{Total}	(k)	85.6	167.7	183.7	176.5

I_s, S_s: Non-composite moment of inertia and section modulus of the steel section used for computing f_s(Total and Overload) due to non-composite dead loads ($in.^4$ and $in.^3$).
$I_c(n)$, $S_c(n)$: Composite moment of inertia and section modulus of the steel and deck based upon the modular ratio, "n", used for computing f_s(Total and Overload) due to short-term composite live loads ($in.^4$ and $in.^3$).
$I_c(3n)$, $S_c(3n)$: Composite moment of inertia and section modulus of the steel and deck based upon 3 times the modular ratio, "3n", used for computing f_s(Total and Overload) due to long-term composite (superimposed) dead loads ($in.^4$ and $in.^3$).
Z: Plastic Section Modulus of the steel section in non-composite areas ($in.^3$).
ϱ: Un-factored non-composite dead load (kips/ft.).
$M\varrho$: Un-factored moment due to non-composite dead load (kip-ft.).
$s\varrho$: Un-factored long-term composite (superimposed) dead load (kips/ft.)
$M_s\varrho$: Un-factored moment due to long-term composite (superimposed) dead load (kip-ft.).
ML: Un-factored live load moment (kip-ft.).
M_I: Un-factored moment due to impact (kip-ft.).
M_a: Factored design moment (kip-ft.).
$1.3\ [M\varrho + M_s\varrho + \frac{5}{3}(ML + M_I)]$
M_u: Compact composite moment capacity according to AASHTO LFD 10.50.1.1 or compact non-composite moment capacity according to AASHTO LFD 10.48.1 (kip-ft.).
f_s (Overload): Sum of stresses as computed from the moments below (ksi).
$M\varrho + M_s\varrho + \frac{5}{3}(ML + M_I)$
f_s (Total): Sum of stresses as computed from the moments below on non-compact section (ksi).
$1.3\ [M\varrho + M_s\varrho + \frac{5}{3}(ML + M_I)]$
VR: Maximum L + impact shear range within the composite portion of the span for stud shear connector design (kips).

TOP OF EXISTING BEAM ELEVATION ***

	Beam 6	Beam 7	Beam 8	Beam 9	Beam 10	Beam 11	Beam 12	Beam 13	Beam 14
℄ E. Brg. Pier C4	610.67	610.80	610.93	611.03	611.08	611.15	611.23	611.31	611.39
℄ Splice 1	611.11	611.24	611.37	611.42	611.43	611.43	611.43	611.43	611.43
℄ Brg. Pier C5	611.23	611.36	611.49	611.54	611.55	611.54	611.51	611.49	611.46
℄ Splice 2	611.38	611.52	611.64	611.70	611.70	611.67	611.62	611.56	611.50
℄ Splice 3	611.61	611.74	611.86	611.92	611.92	611.87	611.76	611.63	611.51
℄ Brg. Pier C6	611.67	611.81	611.93	611.99	611.99	611.93	611.82	611.70	611.57
℄ Splice 4	611.74	611.88	612.00	612.06	612.06	612.00	611.89	611.77	611.64
℄ Splice 5	611.79	611.92	612.04	612.10	612.10	612.05	611.94	611.81	611.69
℄ Brg. Pier C7	611.76	611.89	612.02	612.07	612.07	612.02	611.91	611.79	611.66
℄ Splice 6	611.74	611.87	611.99	612.05	612.05	612.00	611.89	611.76	611.64
℄ Splice 7	611.61	611.74	611.86	611.92	611.92	611.87	611.76	611.63	611.51
℄ Brg. Pier C8	611.53	611.66	611.79	611.84	611.84	611.79	611.68	611.56	611.43
℄ Splice 8	611.47	611.61	611.73	611.79	611.79	611.73	611.62	611.50	611.37
℄ W. Brg. Pier C9	611.40	611.53	611.66	611.71	611.71	611.66	611.55	611.43	611.30

FOR INFORMATION ONLY

TOP OF EXISTING BEAM ELEVATION (STAGE IIA) ***

	Beam 1	Beam 2	Beam 3	Beam 4	Beam 5
℄ W. Brg. Pier C9	610.73	610.87	611.00	611.13	611.27

*** Elevations have been converted from the City of Chicago Datum on the original construction plans dated June 26, 1950 to the current NAVD 88 datum using a conversion of 579.19 feet.

0160461-60X78-S088-DET.dgn

PARSONS BRINCKERHOFF	USER NAME = poteld	DESIGNED - IJL	REVISED -	STATE OF ILLINOIS DEPARTMENT OF TRANSPORTATION	SUPERSTRUCTURE STEEL DETAILS I – UNIT II STRUCTURE NO. 016–0461	F.A.I. RTE.	SECTION	COUNTY	TOTAL SHEETS	SHEET NO.
		CHECKED - PJL	REVISED -			90/94/290	2014-004 R&B (WB)	COOK	706	365
	PLOT SCALE = N.T.S.	DRAWN - IJL	REVISED -					CONTRACT NO. 60X78		
	PLOT DATE = 3/23/2016	CHECKED - JIG	REVISED -		SHEET NO. S2-88 OF S2-145 SHEETS		ILLINOIS	FED. AID PROJECT		

HBM ENGINEERING GROUP, LLC	USER NAME = ahmad.issa	DESIGNED -	REVISED -	STATE OF ILLINOIS DEPARTMENT OF TRANSPORTATION	EXISTING RECORD DRAWINGS	F.A.I. RTE.	SECTION	COUNTY	TOTAL SHEETS	SHEET NO.
		CHECKED -	REVISED -			90/94/290	2014-013R&B-R	COOK	1972	1730
	PLOT SCALE = N.T.S	DRAWN -	REVISED -					CONTRACT NO. 60X93		
	PLOT DATE = 7/26/2018	CHECKED - MI, MAI	REVISED -				ILLINOIS	FED. AID PROJECT		

FILE NAME: pw:\\617479-PWINT.aecomonline.local:AECOM_DS02_NA\Documents\01 Americas\Transportation\60269938 Circle\Phase_II\000_CAD\008_Structural\Structure_016-1718\Existing Plans\33906-60X93-SXX-Existing152

2:20:51 PM

FOR INFORMATION ONLY

SHEET INTENTIONALLY LEFT BLANK

PARSONS BRINCKERHOFF	USER NAME = potaid	DESIGNED - PJL	REVISED - △A 4/27/2016 JIG	STATE OF ILLINOIS DEPARTMENT OF TRANSPORTATION	SUPERSTRUCTURE STEEL DETAILS II – UNIT II STRUCTURE NO. 016-0461	F.A.I. RTE.	SECTION	COUNTY	TOTAL SHEETS / SHEET NO.
		CHECKED - JJG	REVISED -			90/94/290	2014-004 R&B (WB)	COOK	706 / 366
	PLOT SCALE = N.T.S.	DRAWN - PJL	REVISED -					CONTRACT NO. 60X78	
	PLOT DATE = 5/16/2016	CHECKED - JJG	REVISED -		SHEET NO. S2-89 OF S2-145 SHEETS		ILLINOIS	FED. AID PROJECT	

0160461-60X78-S089-DET.dgn

HBM ENGINEERING GROUP, LLC	USER NAME = ahmad.issa	DESIGNED -	REVISED -	STATE OF ILLINOIS DEPARTMENT OF TRANSPORTATION	EXISTING RECORD DRAWINGS	F.A.I. RTE.	SECTION	COUNTY	TOTAL SHEETS / SHEET NO.
		CHECKED -	REVISED -			90/94/290	2014-013R&B-R	COOK	1972 / 1731
	PLOT SCALE = N.T.S	DRAWN -	REVISED -					CONTRACT NO. 60X93	
	PLOT DATE = 7/26/2018	CHECKED - MI, MAI	REVISED -				ILLINOIS	FED. AID PROJECT	

FILE NAME: pw:\\617479-PWINT.aecomonline.local:AECOM_D502_NA\Documents\01 Americas\Transportation\60269938 Circle\Phase_II\000_CAD\008_Structural\Structure_016-1718\Existing Plans\33906-60X93-SXX-Existing154

2:21:00 PM

FOR INFORMATION ONLY

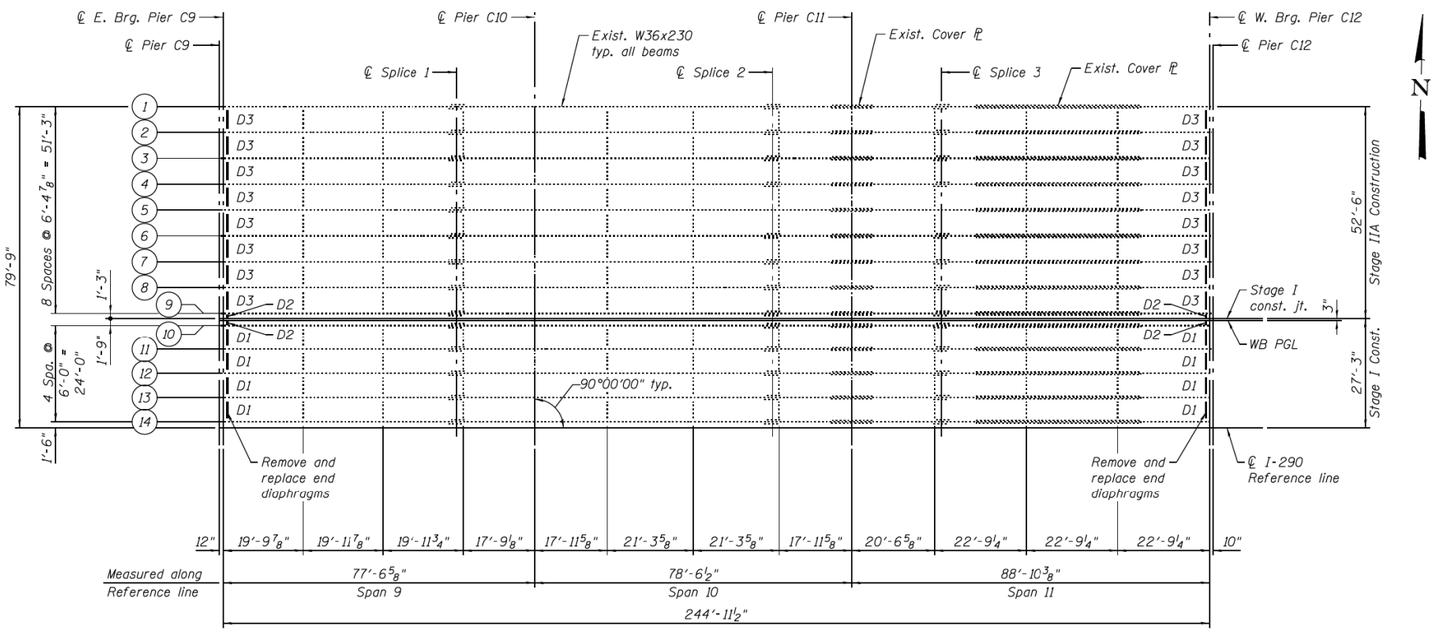

EXISTING FRAMING PLAN - UNIT III

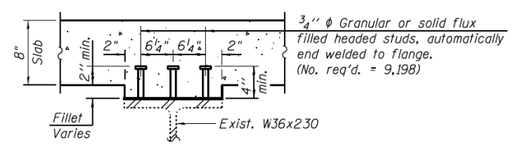

SECTION A-A

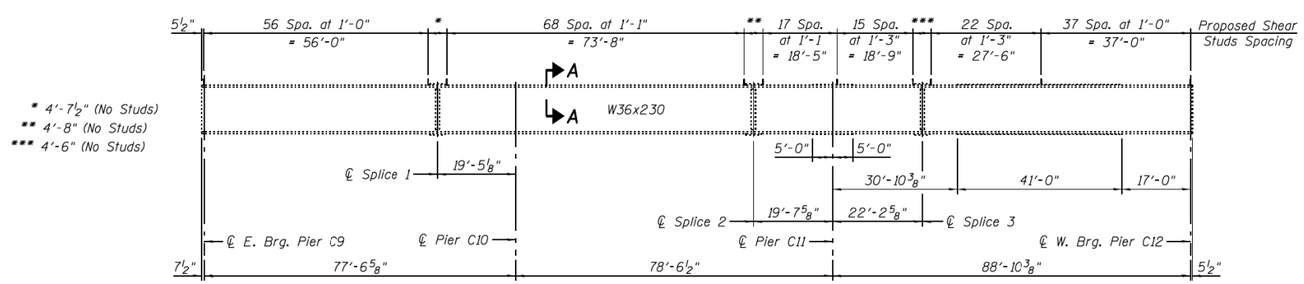

EXISTING BEAM ELEVATION - UNIT III

Notes:
For minimum clearances of shear studs at ends of cover plates, see sheet S2-87.
For interior beam moment table and reactions, see sheet S2-91.
For diaphragm replacement details, see sheet S2-93.

0160461-60X78-S090-FRM.dgn

PARSONS BRINCKERHOFF	USER NAME = poteld	DESIGNED - JJL	REVISED -	STATE OF ILLINOIS DEPARTMENT OF TRANSPORTATION	FRAMING PLAN – UNIT III STRUCTURE NO. 016–0461	F.A.I. RTE.	SECTION	COUNTY	TOTAL SHEETS	SHEET NO.
		CHECKED - PJL	REVISED -			90/94/290	2014-004 R&B (WB)	COOK	706	367
	PLOT SCALE = N.T.S.	DRAWN - JJL	REVISED -					CONTRACT NO. 60X78		
	PLOT DATE = 3/23/2016	CHECKED - JIG	REVISED -		SHEET NO. S2-90 OF S2-145 SHEETS		ILLINOIS	FED. AID PROJECT		

HBM ENGINEERING GROUP, LLC	USER NAME = ahmad.issa	DESIGNED -	REVISED -	STATE OF ILLINOIS DEPARTMENT OF TRANSPORTATION	EXISTING RECORD DRAWINGS	F.A.I. RTE.	SECTION	COUNTY	TOTAL SHEETS	SHEET NO.
		CHECKED -	REVISED -			90/94/290	2014-013R&B-R	COOK	1972	1732
	PLOT SCALE = N.T.S	DRAWN -	REVISED -					CONTRACT NO. 60X93		
	PLOT DATE = 7/26/2018	CHECKED - MI, MAI	REVISED -				ILLINOIS	FED. AID PROJECT		

FILE NAME: pw:\\617479-PWINT.aecomonline.local:AECOM_DS02_NA\Documents\01 Americas\Transportation\60269938 Circle\Phase_II\000_CAD\008_Structural\Structure_016-1718\Existing Plans\33906-60X93-SXX-Existing155

2:21:07 PM

FOR INFORMATION ONLY

INTERIOR BEAM MOMENT TABLE						
		0.4 Sp. 9	Pier C10	0.5 Sp. 10	Pier C11	0.6 Sp. 11
I_s	(in^4)	15000	15000	15000	21254	21254
$I_c(n)$	(in^4)	34857	18370	34857	24686	43499
$I_c(3n)$	(in^4)	24894	18370	24894	24686	31714
S_s	(in^3)	837	837	837	1144	1144
$S_c(n)$	(in^3)	1162	1155	1162	1456	1492
$S_c(3n)$	(in^3)	1038	1155	1038	1456	1346
w_D	(k/')	0.928	0.928	0.928	0.998	0.998
M_D	('k)	461	530	107	687	654
w_S	(k/')	0.230	0.230	0.230	0.230	0.230
M_S	('k)	113	133	26	169	151
M_L	('k)	518	410	430	466	614
M_I	('k)	128	101	105	112	143
$\frac{5}{3}[M_L + I]$	('k)	1077	852	892	963	1262
M_a	('k)	2146	1969	1332	2365	2687
* M_u	('k)	3309		3883		4424
f_s w_D non-comp	(ksi)	6.6	7.6	1.5	7.2	6.9
f_s w_D (comp)	(ksi)	1.3	1.4	0.3	1.4	1.3
f_s $\frac{5}{3}[M_L + M_I]$	(ksi)	11.1	8.9	9.2	7.9	10.1
f_s (Overload)	(ksi)	19.0	17.9	11.0	16.5	18.3
** f_s (Total)	(ksi)		23.3		21.5	
VR	(k)	53.1	59.3	41.8	58.2	53.1

* Compact section
** Braced non-compact and partially braced section

INTERIOR BEAM REACTION TABLE					
		Pier C9	Pier C10	Pier C11	Pier C12
R_D	(k)	37.3	96.5	110.8	44.6
R_L	(k)	46.4	59.3	62.9	47.4
R_I	(k)	11.5	14.6	15.1	11.1
R_{Total}	(k)	95.2	170.4	188.8	103.1

I_s, S_s: Non-composite moment of inertia and section modulus of the steel section used for computing f_s(Total and Overload) due to non-composite dead loads ($in.^4$ and $in.^3$).
$I_c(n)$, $S_c(n)$: Composite moment of inertia and section modulus of the steel and deck based upon the modular ratio, "n", used for computing f_s(Total and Overload) due to short-term composite live loads ($in.^4$ and $in.^3$).
$I_c(3n)$, $S_c(3n)$: Composite moment of inertia and section modulus of the steel and deck based upon 3 times the modular ratio, "3n", used for computing f_s(Total and Overload) due to long-term composite (superimposed) dead loads ($in.^4$ and $in.^3$).
Z: Plastic Section Modulus of the steel section in non-composite areas ($in.^3$).
w_D: Un-factored non-composite dead load (kips/ft.).
M_D: Un-factored moment due to non-composite dead load (kip-ft.).
w_S: Un-factored long-term composite (superimposed) dead load (kips/ft.)
M_S: Un-factored moment due to long-term composite (superimposed) dead load (kip-ft.).
M_L: Un-factored live load moment (kip-ft.).
M_I: Un-factored moment due to impact (kip-ft.).
M_a: Factored design moment (kip-ft.).
$1.3\ [M_D + M_S + \frac{5}{3}(M_L + M_I)]$
M_u: Compact composite moment capacity according to AASHTO LFD 10.50.1.1 or compact non-composite moment capacity according to AASHTO LFD 10.48.1 (kip-ft.).
f_s (Overload): Sum of stresses as computed from the moments below (ksi).
$M_D + M_S + \frac{5}{3}(M_L + M_I)$
f_s (Total): Sum of stresses as computed from the moments below on non-compact section (ksi).
$1.3\ [M_D + M_S + \frac{5}{3}(M_L + M_I)]$
VR: Maximum L + impact shear range within the composite portion of the span for stud shear connector design (kips).

TOP EXISTING BEAM ELEVATION ***

	Beam 1	Beam 2	Beam 3	Beam 4	Beam 5	Beam 6	Beam 7	Beam 8	Beam 9	Beam 10	Beam 11	Beam 12	Beam 13	Beam 14
℄ E. Brg. Pier C9	610.72	610.86	610.99	611.12	611.26	611.39	611.52	611.65	611.71	611.71	611.65	611.54	611.42	611.29
℄ Splice 1	610.41	610.55	610.68	610.81	610.95	611.08	611.22	611.34	611.40	611.40	611.34	611.23	611.01	610.98
℄ Brg. Pier C10	610.34	610.48	610.61	610.74	610.88	611.01	611.14	611.27	611.33	611.33	611.27	611.16	611.04	610.91
℄ Splice 2	610.13	610.26	610.40	610.53	610.66	610.80	610.93	611.05	611.11	611.11	611.06	610.95	610.82	610.70
℄ Brg. Pier C11	610.05	610.19	610.32	610.45	610.59	610.72	610.85	610.98	611.04	611.04	610.99	610.87	610.75	610.62
℄ Splice 3	609.97	610.10	610.24	610.37	610.50	610.64	610.77	610.89	610.95	610.95	610.90	610.79	610.66	610.54
℄ W. Brg. Pier C12	609.81	609.94	610.07	610.21	610.34	610.47	610.61	610.73	610.79	610.79	610.74	610.62	610.50	610.37

*** Elevations have been converted from the City of Chicago Datum on the original construction plans dated June 26, 1950 to the current NAVD 88 datum using a conversion of 579.19 feet.

FOR INFORMATION ONLY

0160461-60X78-S091-DET.dgn

PARSONS BRINCKERHOFF	USER NAME = poteld	DESIGNED - JJL	REVISED -	STATE OF ILLINOIS DEPARTMENT OF TRANSPORTATION	SUPERSTRUCTURE STEEL DETAILS – UNIT III STRUCTURE NO. 016–0461	F.A.I. RTE.	SECTION	COUNTY	TOTAL SHEETS	SHEET NO.
		CHECKED - PJL	REVISED -			90/94/290	2014-004 R&B (WB)	COOK	706	368
	PLOT SCALE = N.T.S.	DRAWN - JJL	REVISED -					CONTRACT NO. 60X78		
	PLOT DATE = 3/23/2016	CHECKED - JIG	REVISED -		SHEET NO. S2-91 OF S2-145 SHEETS		ILLINOIS	FED. AID PROJECT		

HBM ENGINEERING GROUP, LLC	USER NAME = ahmad.issa	DESIGNED -	REVISED -	STATE OF ILLINOIS DEPARTMENT OF TRANSPORTATION	EXISTING RECORD DRAWINGS	F.A.I. RTE.	SECTION	COUNTY	TOTAL SHEETS	SHEET NO.
		CHECKED -	REVISED -			90/94/290	2014-013R&B-R	COOK	1972	1733
	PLOT SCALE = N.T.S	DRAWN -	REVISED -					CONTRACT NO. 60X93		
	PLOT DATE = 7/26/2018	CHECKED - MI, MAI	REVISED -				ILLINOIS	FED. AID PROJECT		

FILE NAME: pw:\\617479-PWINT.aecomonline.local:AECOM_DS02_NA\Documents\01 Americas\Transportation\60269938 Circle\Phase_II\000_CAD\008_Structural\Structure_016-1718\Existing Plans\33906-60X93-SXX-Existing156

2:21:15 PM

FOR INFORMATION ONLY

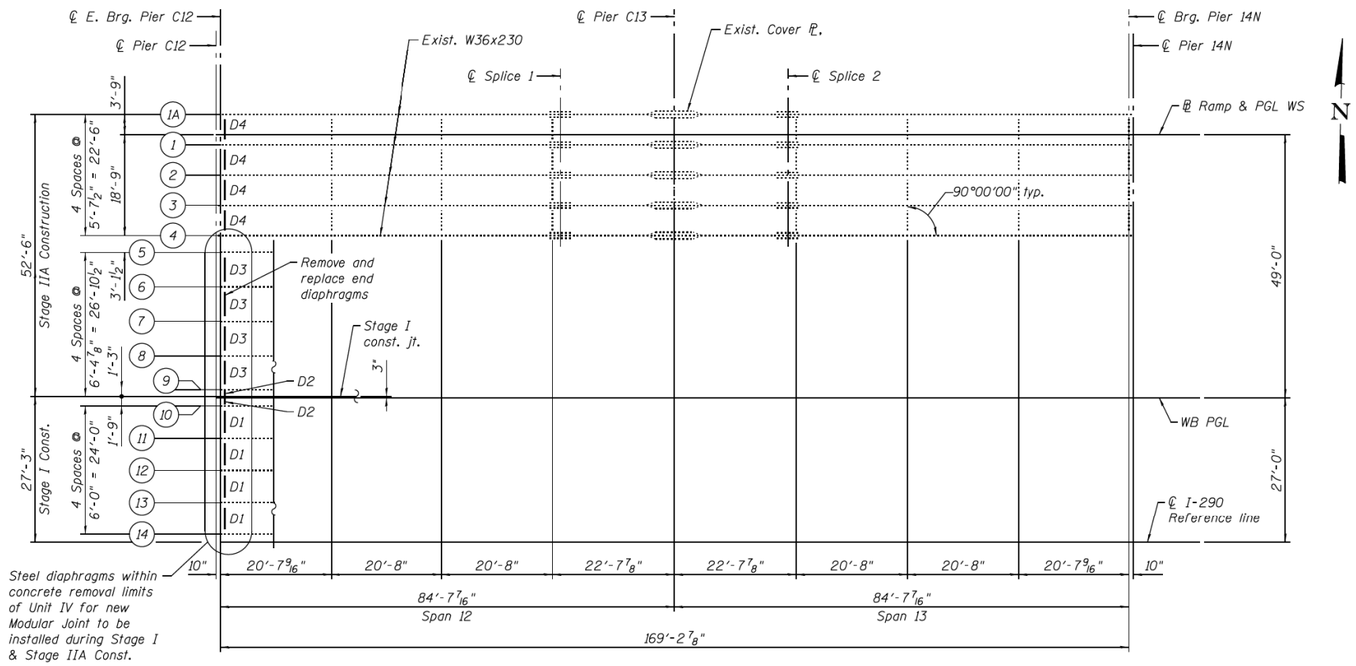

EXISTING FRAMING PLAN - ENTRANCE RAMP

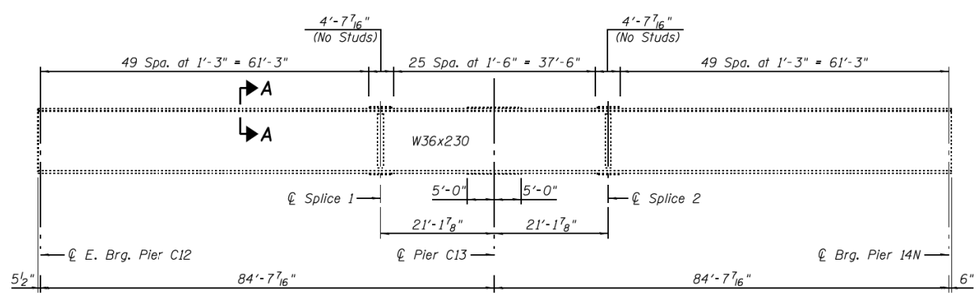

EXISTING BEAM ELEVATION - ENTRANCE RAMP

TOP EXISTING BEAM ELEVATION

(For information only)

	Beam 1A	Beam 1	Beam 2	Beam 3	Beam 4
℄ E. Brg. Pier C12	609.80	609.92	610.03	610.15	610.27
℄ Splice 1	607.76	607.87	607.99	608.11	608.23
℄ Brg. Pier C13	606.77	606.88	607.00	607.12	607.24
℄ Splice 2	605.78	605.89	606.01	606.13	606.24
℄ Brg. Pier 14N	602.90	603.02	603.14	603.26	603.38

*** Elevations have been converted from the City of Chicago Datum on the original construction plans dated June 26, 1950 to the current NAVD 88 datum using a conversion of 579.19 feet.

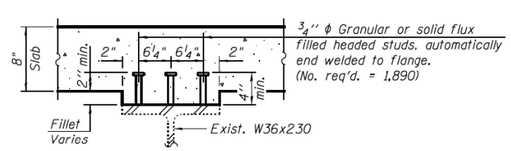

SECTION A-A

INTERIOR BEAM MOMENT TABLE				
			0.4 Sp. 12 or 0.6 Sp. 13	Pier C13
	I_s	(in^4)	15000	21254
	$I_c(n)$	(in^4)	33553	24292
	$I_c(3n)$	(in^4)	23960	24292
	S_s	(in^3)	837	1144
	$S_c(n)$	(in^3)	1149	1417
	$S_c(3n)$	(in^3)	1023	1417
	w_D	(k/')	0.850	0.920
	M_D	('k)	416	788
	M_{sD}	(k/')	0.340	0.340
	M_{sD}	('k)	166	314
	M_L	('k)	510	451
	M_I	('k)	122	108
	$\frac{5}{3}[M_L + I]$	('k)	1053	932
	M_a	('k)	2126	2644
*	M_u	('k)	3326	
	f_s DL non-comp	(ksi)	6.0	8.3
	f_s DL (comp)	(ksi)	1.9	2.7
	f_s $\frac{5}{3}[M_L + M_I]$	(ksi)	11.0	7.9
	f_s (Overload)	(ksi)	18.9	18.9
**	f_s (Total)	(ksi)		24.6
	VR	(k)	49.5	48.1

* Compact section
** Braced non-compact and partially braced section

INTERIOR BEAM REACTION TABLE			
		Pier C12 or Pier 14N	Pier C13
	R_D	(k)	38.1	127.3
	R_L	(k)	45.5	60.6
	R_I	(k)	10.9	14.5
	R_{Total}	(k)	94.5	202.4

I_s, S_s: Non-composite moment of inertia and section modulus of the steel section used for computing f_s(Total and Overload) due to non-composite dead loads ($in.^4$ and $in.^3$).
$I_c(n)$, $S_c(n)$: Composite moment of inertia and section modulus of the steel and deck based upon the modular ratio, "n", used for computing f_s(Total and Overload) due to short-term composite live loads ($in.^4$ and $in.^3$).
$I_c(3n)$, $S_c(3n)$: Composite moment of inertia and section modulus of the steel and deck based upon 3 times the modular ratio, "3n", used for computing f_s(Total and Overload) due to long-term composite (superimposed) dead loads ($in.^4$ and $in.^3$).
Z: Plastic Section Modulus of the steel section in non-composite areas ($in.^3$).
w_D: Un-factored non-composite dead load (kips/ft.).
M_D: Un-factored moment due to non-composite dead load (kip-ft.).
M_{sD}: Un-factored long-term composite (superimposed) dead load (kips/ft.)
M_{sD}: Un-factored moment due to long-term composite (superimposed) dead load (kip-ft.).
M_L: Un-factored live load moment (kip-ft.).
M_I: Un-factored moment due to impact (kip-ft.).
M_a: Factored design moment (kip-ft.).
$1.3\ [M_D + M_{sD} + \frac{5}{3}(M_L + M_I)]$
M_u: Compact composite moment capacity according to AASHTO LFD 10.50.1.1 or compact non-composite moment capacity according to AASHTO LFD 10.48.1 (kip-ft.).
f_s (Overload): Sum of stresses as computed from the moments below (ksi).
$M_D + M_{sD} + \frac{5}{3}(M_L + M_I)$
f_s (Total): Sum of stresses as computed from the moments below on non-compact section (ksi).
$1.3\ [M_D + M_{sD} + \frac{5}{3}(M_L + M_I)]$
VR: Maximum L + impact shear range within the composite portion of the span for stud shear connector design (kips).

Notes:
For minimum clearances of shear studs at ends of cover plates, see sheet S2-87.
For diaphragm replacement details, see sheet S2-93.

0160461-60X78-S092-FRM.dgn

PARSONS BRINCKERHOFF	USER NAME = poteld	DESIGNED - IJL	REVISED -	STATE OF ILLINOIS DEPARTMENT OF TRANSPORTATION	FRAMING PLAN – ENTRANCE RAMP STRUCTURE NO. 016–0461	F.A.I. RTE.	SECTION	COUNTY	TOTAL SHEETS	SHEET NO.
		CHECKED - PJL	REVISED -			90/94/290	2014-004 R&B (WB)	COOK	706	369
	PLOT SCALE = N.T.S.	DRAWN - IJL	REVISED -					CONTRACT NO. 60X78		
	PLOT DATE = 3/23/2016	CHECKED - JIG	REVISED -		SHEET NO. S2-92 OF S2-145 SHEETS		ILLINOIS FED. AID PROJECT			

HBM ENGINEERING GROUP, LLC	USER NAME = ahmad.issa	DESIGNED -	REVISED -	STATE OF ILLINOIS DEPARTMENT OF TRANSPORTATION	EXISTING RECORD DRAWINGS	F.A.I. RTE.	SECTION	COUNTY	TOTAL SHEETS	SHEET NO.
		CHECKED -	REVISED -			90/94/290	2014-013R&B-R	COOK	1972	1734
	PLOT SCALE = N.T.S	DRAWN -	REVISED -					CONTRACT NO. 60X93		
	PLOT DATE = 7/26/2018	CHECKED - MI, MAI	REVISED -				ILLINOIS FED. AID PROJECT			

FILE NAME: pw:\\617479-PWINT.aecomonline.local:AECOM_DS02_NA\Documents\01 Americas\Transportation\60269938 Circle\Phase_II\000_CAD\008_Structural\Structure_016-1718\Existing Plans\33906-60X93-SXX-Existing157

2:21:24 PM

FOR INFORMATION ONLY

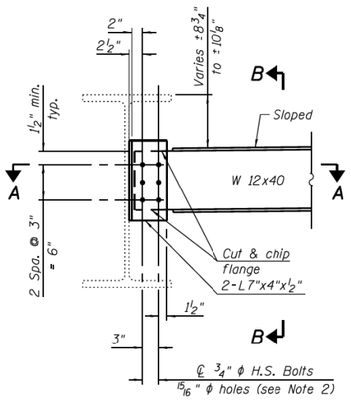

END DIAPHRAGM D1, D3 & D4

D1 (4 Required, Unit II, ℄ E. Brg. Pier C9,
4 Required, Unit III, ℄ W. Brg. Pier C9,
4 Required, Unit III, ℄ E. Brg. Pier C12,
4 Required, Unit IV, ℄ W. Brg. Pier C12)
D3 (8 Required, Unit II, ℄ E. Brg. Pier C9,
8 Required, Unit III, ℄ W. Brg. Pier C9,
8 Required, Unit III, ℄ E. Brg. Pier C12,
4 Required, Unit IV, ℄ W. Brg. Pier C12)
D4 (4 Required Entrance Ramp, ℄ W. Brg. Pier C12)

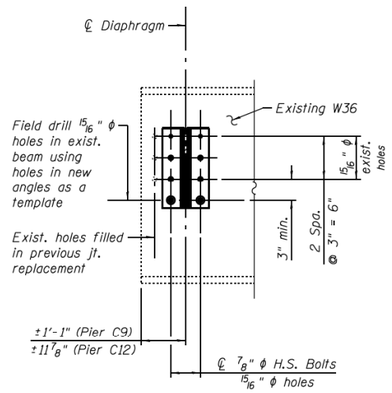

SECTION B-B

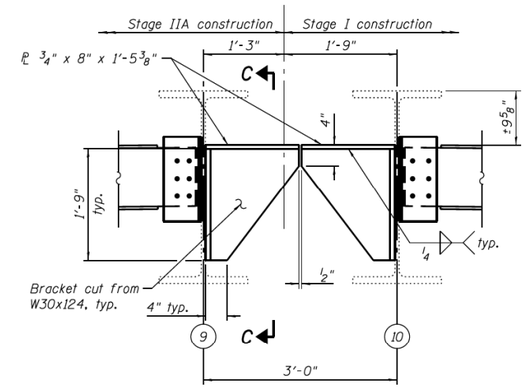

END DIAPHRAGM (BRACKETS) D2 AT STAGE LINE

D2 (2 Required, Unit II, ℄ E. Brg. Pier C9,
2 Required, Unit III, ℄ W. Brg. Pier C9,
2 Required, Unit III, ℄ E. Brg. Pier C12,
2 Required, Unit IV, ℄ W. Brg. Pier C12)

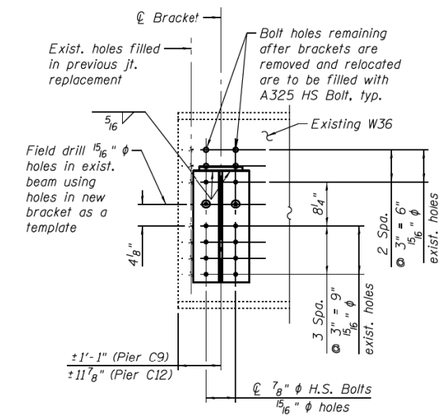

SECTION C-C

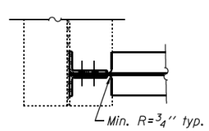

SECTION A-A

Notes:

1. All structural steel for diaphragms and brackets at Pier C9 & Pier C12 may be AASHTO M270 Grade 36 and shall be hot dipped galvanized. Cost of removal and replacement of steel diaphragms, brackets, and connections included in Structural Steel Repair.
2. Two hardened washers required for each set of oversized holes.
3. Cost of field drilling is included in Structural Steel Repair.

BILL OF MATERIAL

Item	Unit	Total
Structural Steel Repair	Pound	18,774

0160461-60X78-S093-DET.dgn

PARSONS BRINCKERHOFF	USER NAME = poteld	DESIGNED - PJL	REVISED -	STATE OF ILLINOIS DEPARTMENT OF TRANSPORTATION	SUPERSTRUCTURE STEEL DETAILS – UNIT II, UNIT III & ENTRANCE RAMP STRUCTURE NO. 016-0461	F.A.I. RTE.	SECTION	COUNTY	TOTAL SHEETS	SHEET NO.
		CHECKED - AH	REVISED -			90/94/290	2014-004 R&B (WB)	COOK	706	370
	PLOT SCALE = N.T.S.	DRAWN - PJL	REVISED -					CONTRACT NO. 60X78		
	PLOT DATE = 3/23/2016	CHECKED - JIG	REVISED -		SHEET NO. S2-93 OF S2-145 SHEETS			ILLINOIS FED. AID PROJECT		

HBM ENGINEERING GROUP, LLC	USER NAME = ahmad.issa	DESIGNED -	REVISED -	STATE OF ILLINOIS DEPARTMENT OF TRANSPORTATION	EXISTING RECORD DRAWINGS	F.A.I. RTE.	SECTION	COUNTY	TOTAL SHEETS	SHEET NO.
		CHECKED -	REVISED -			90/94/290	2014-013R&B-R	COOK	1972	1735
	PLOT SCALE = N.T.S	DRAWN -	REVISED -					CONTRACT NO. 60X93		
	PLOT DATE = 7/26/2018	CHECKED - MI, MAI	REVISED -					ILLINOIS FED. AID PROJECT		

FILE NAME: pw:\\617479-PWINT.aecomonline.local:AECOM_DS02_NA\Documents\01 Americas\Transportation\60269938 Circle\Phase_II\000_CAD\008_Structural\Structure_016-1718\Existing Plans\33906-60X93-SXX-Existing158

2:21:34 PM

FOR INFORMATION ONLY

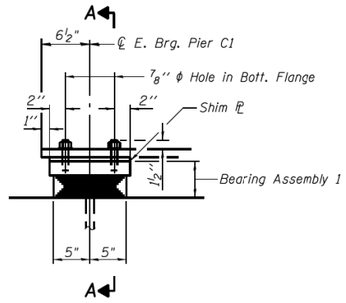

ELEVATION AT E. BRG. PIER C1

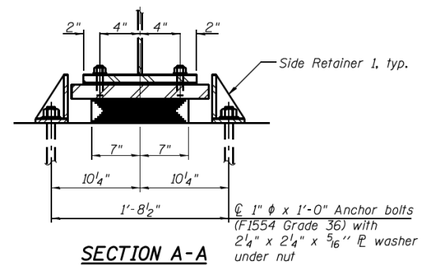

SECTION A-A

TYPE I ELASTOMERIC EXP. BRG. AT E. BRG. PIER C1

(9 Required)

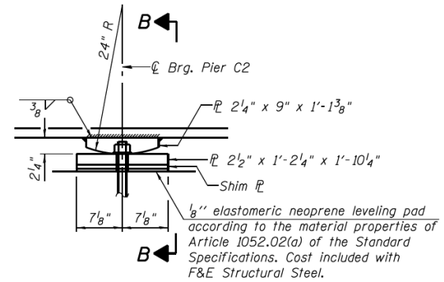

ELEVATION AT PIER C2

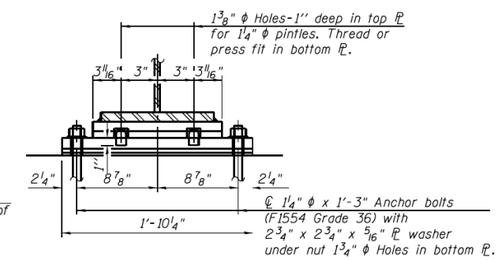

SECTION B-B

FIXED BEARING AT PIER C2

(9 Required)

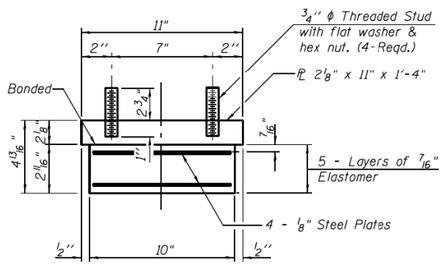

BEARING ASSEMBLY 1

Note:
Shim plates shall not be placed under Bearing Assembly.

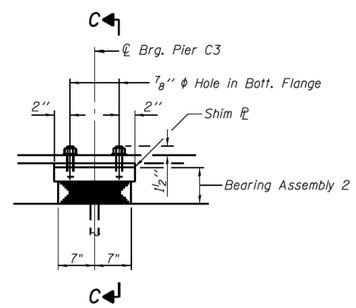

ELEVATION AT PIER C3

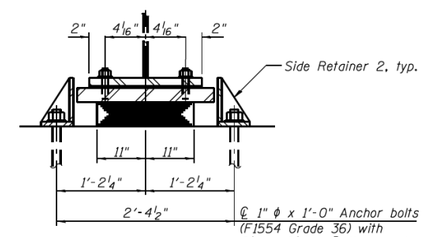

SECTION C-C

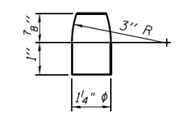

PINTLE

TYPE I ELASTOMERIC EXP. BRG. AT PIER C3

(9 Required)

Notes:
Anchor bolts shall be ASTM F1554 all-thread (or an Engineer-approved alternate material) of the grade(s) and diameter(s) specified. The corresponding specified grade of AASHTO M314 anchor bolts may be used in lieu of ASTM F1554.
Anchor bolts at fixed bearings may be either cast in place or installed in holes drilled after the supported member is in place.
Anchor bolts for side retainers may be cast in place or installed in holes drilled before or after members are in place.
Drilled and set anchor bolts shall be installed according to Article 521.06 of the Standard Specifications.
Side retainers and other steel members required for the elastomeric bearing assembly shall be included in the cost of Elastomeric Bearing Assembly, Type I.
Fixed Bearing Assembly included in the cost of Furnishing and Erecting Structural Steel.
Two ⅛" adjusting shims shall be provided for each bearing in addition to all other plates or shims and placed as shown on bearing details.
All (embedded and separate) bearing plates, side retainers, anchor bolts, nuts, washers and pintles shall be galvanized according to AASHTO M111 or M232 as applicable.

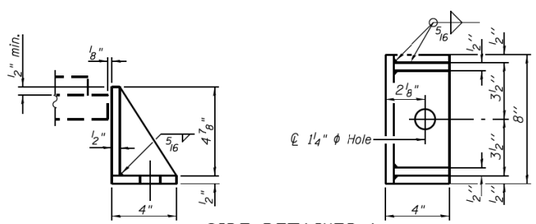

SIDE RETAINER 1

Equivalent rolled angle with stiffeners will be allowed in lieu of welded plates.

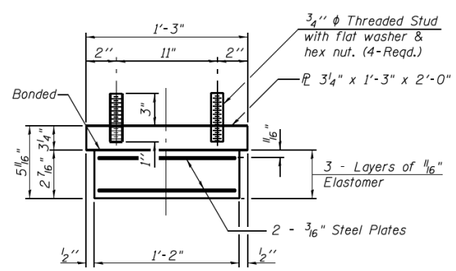

BEARING ASSEMBLY 2

Note:
Shim plates shall not be placed under Bearing Assembly.

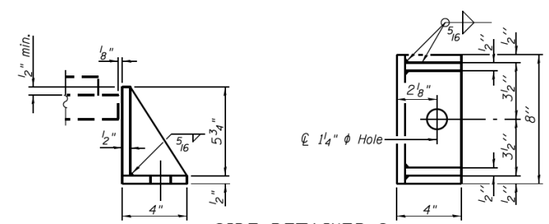

SIDE RETAINER 2

Equivalent rolled angle with stiffeners will be allowed in lieu of welded plates.

BILL OF MATERIAL

Item	Unit	Total
Elastomeric Bearing Assembly, Type I	Each	18
Anchor Bolts 1"	Each	36
Anchor Bolts 1¼"	Each	18

0160461-60X78-S094-BRG.dgn

PARSONS BRINCKERHOFF	USER NAME = poteld	DESIGNED - IJL	REVISED -	STATE OF ILLINOIS DEPARTMENT OF TRANSPORTATION	BEARING DETAILS I- UNIT I STRUCTURE NO. 016-0461	F.A.I. RTE.	SECTION	COUNTY	TOTAL SHEETS	SHEET NO.
		CHECKED - PJL	REVISED -			90/94/290	2014-004 R&B (WB)	COOK	706	371
	PLOT SCALE = N.T.S.	DRAWN - IJL/DCP	REVISED -					CONTRACT NO. 60X78		
	PLOT DATE = 3/23/2016	CHECKED - JIG	REVISED -		SHEET NO. S2-94 OF S2-145 SHEETS			ILLINOIS FED. AID PROJECT		

HBM ENGINEERING GROUP, LLC	USER NAME = ahmad.issa	DESIGNED -	REVISED -	STATE OF ILLINOIS DEPARTMENT OF TRANSPORTATION	EXISTING RECORD DRAWINGS	F.A.I. RTE.	SECTION	COUNTY	TOTAL SHEETS	SHEET NO.
		CHECKED -	REVISED -			90/94/290	2014-013R&B-R	COOK	1972	1736
	PLOT SCALE = N.T.S	DRAWN -	REVISED -					CONTRACT NO. 60X93		
	PLOT DATE = 7/26/2018	CHECKED - MI, MAI	REVISED -					ILLINOIS FED. AID PROJECT		

FILE NAME: pw:\\617479-PWINT.aecomonline.local:AECOM_DS02_NA\Documents\01 Americas\Transportation\60269938 Circle\Phase_II\000_CAD\008_Structural\Structure_016-1718\Existing Plans\33906-60X93-SXX-Existing159

2:21:42 PM

FOR INFORMATION ONLY

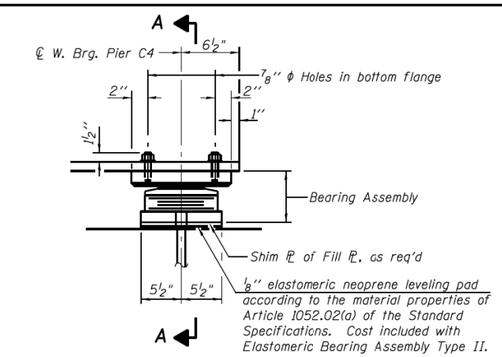

ELEVATION AT W. BRG. PIER C4

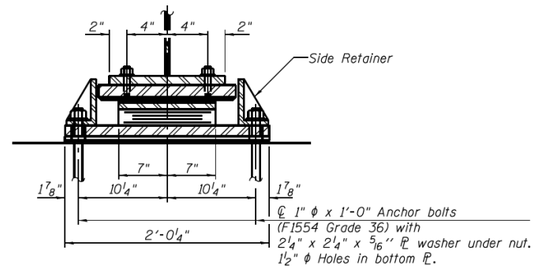

SECTION A-A

TYPE II ELASTOMERIC EXP. BRG. AT W. BRG. PIER C4

(9 Required)

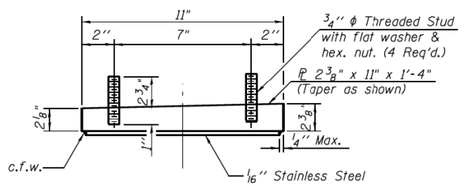

TOP BEARING ASSEMBLY

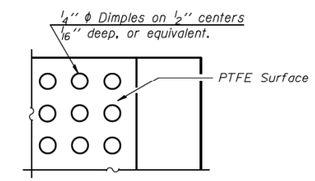

PLAN-PTFE SURFACE

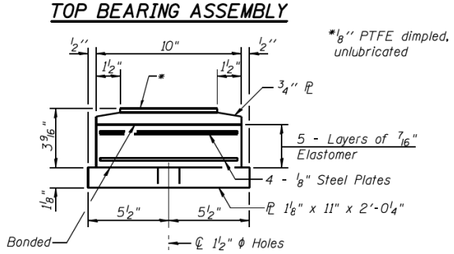

BOTTOM BEARING ASSEMBLY

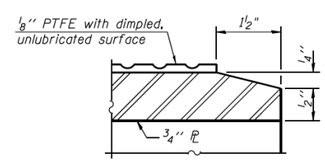

SECTION THRU PTFE

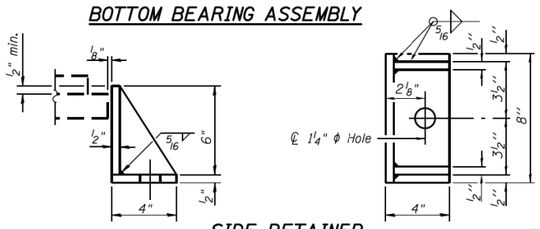

SIDE RETAINER

Equivalent rolled angle with stiffeners will be allowed in lieu of welded plates.

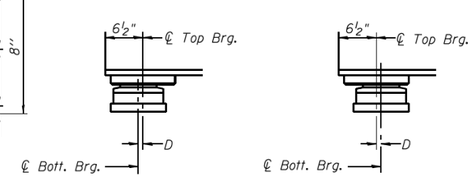

BELOW 50°F. (Move bott. brg. away from fixed brg.)

ABOVE 50°F. (Move bott. brg. toward fixed brg.)

SETTING ANCHOR BOLTS AT EXP. BRG.

D=⅛" per each 100' of expansion for every 15° temp. change from the normal temp. of 50°F.

FILL PLATE THICKNESS TABLE AT W. BRG. PIER C4

Beam No.	Thickness
15	½"
17	⅜"

Notes:

Anchor bolts shall be ASTM F1554 all-thread (or an Engineer-approved alternate material) of the grade(s) and diameter(s) specified. The corresponding specified grade of AASHTO M314 anchor bolts may be used in lieu of ASTM F1554.

Anchor bolts for Type II bearings shall be placed in holes drilled in the concrete through holes in the bottom bearing plate after members are in place. Side retainers shall be placed after bolts are installed.

Drilled and set anchor bolts shall be installed according to Article 521.06 of the Standard Specifications.

Side retainers and other steel members required for the elastomeric bearing assembly shall be included in the cost of Elastomeric Bearing Assembly, Type II.

The ⅛" PTFE sheet shall be bonded directly to the top steel plate with a two-component, medium viscosity epoxy resin, conforming to the requirements of the Federal Specification MMM-A-134, Type I. The bond agent shall be applied on the full area of the contact surfaces.

Bonding of ⅛" PTFE sheet during vulcanizing process will be permitted provided the process and method of adjusting assembly height is approved by the Engineer.

Two ⅛" adjusting shims shall be provided for each bearing in addition to all other plates or shims and placed as shown on bearing details.

All (embedded and separate) bearing plates, side retainers, anchor bolts, nuts, washers and pintles shall be galvanized according to AASHTO M111 or M232 as applicable.

BILL OF MATERIAL

Item	Unit	Total
Elastomeric Bearing Assembly, Type II	Each	9
Anchor Bolts 1"	Each	18

0160461-60X78-S095-BRG.dgn

PARSONS BRINCKERHOFF	USER NAME = poteld	DESIGNED - IJL	REVISED -	STATE OF ILLINOIS DEPARTMENT OF TRANSPORTATION	BEARING DETAILS II – UNIT I STRUCTURE NO. 016–0461	F.A.I. RTE.	SECTION	COUNTY	TOTAL SHEETS	SHEET NO.
		CHECKED - PJL	REVISED -			90/94/290	2014-004 R&B (WB)	COOK	706	372
	PLOT SCALE = N.T.S.	DRAWN - IJL/DCP	REVISED -					CONTRACT NO. 60X78		
	PLOT DATE = 4/25/2016	CHECKED - JIG	REVISED -		SHEET NO. S2-95 OF S2-145 SHEETS		ILLINOIS FED. AID PROJECT			

HBM ENGINEERING GROUP, LLC	USER NAME = ahmad.issa	DESIGNED -	REVISED -	STATE OF ILLINOIS DEPARTMENT OF TRANSPORTATION	EXISTING RECORD DRAWINGS	F.A.I. RTE.	SECTION	COUNTY	TOTAL SHEETS	SHEET NO.
		CHECKED -	REVISED -			90/94/290	2014-013R&B-R	COOK	1972	1737
	PLOT SCALE = N.T.S	DRAWN -	REVISED -					CONTRACT NO. 60X93		
	PLOT DATE = 7/26/2018	CHECKED - MI, MAI	REVISED -				ILLINOIS	FED. AID PROJECT		

FILE NAME: pw:\\617479-PWINT.aecomonline.local:AECOM_DS02_NA\Documents\01 Americas\Transportation\60269938 Circle\Phase_II\000_CAD\008_Structural\Structure_016-1718\Existing Plans\33906-60X93-SXX-Existing160

2:21:50 PM

FOR INFORMATION ONLY

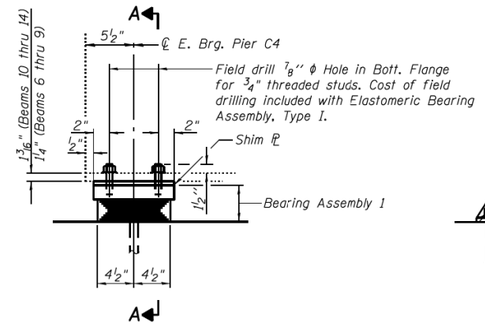

ELEVATION AT PIER C4

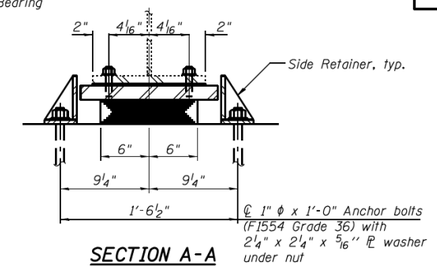

SECTION A-A

FILL PLATE THICKNESS TABLE AT PIER C6

Beam No.	Thickness
10	⅛"

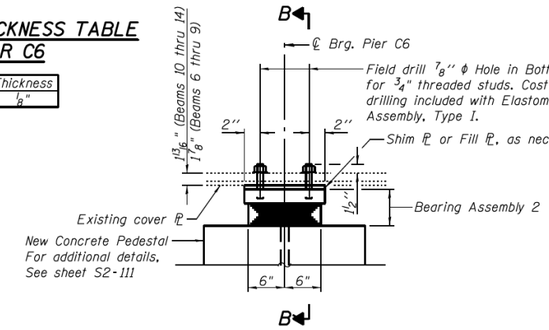

ELEVATION AT PIER C6

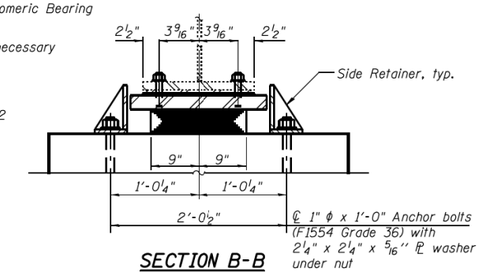

SECTION B-B

TYPE I ELASTOMERIC EXP. BRG. AT E. BRG. PIER C4

(9 Required)

TYPE I ELASTOMERIC EXP. BRG. AT PIER C6

(9 Required)

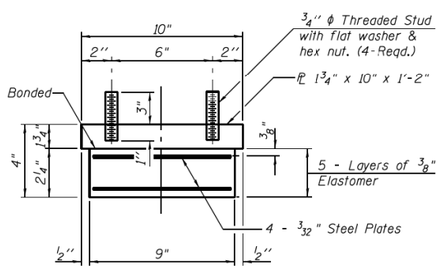

BEARING ASSEMBLY 1

Shim plates shall not be placed under Bearing Assembly.

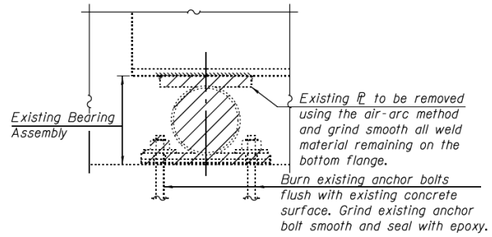

EXISTING BEARING REMOVAL DETAIL PIER C4, C9 & C12

Cost included with Jack and Remove Existing Bearings.
(51 Required)

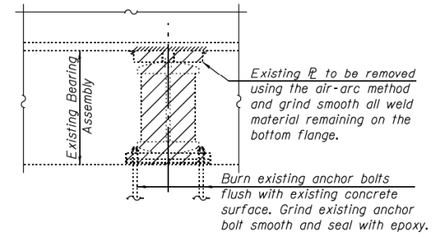

EXISTING BEARING REMOVAL DETAIL PIERS C6, C7, C8, & C11

Cost included with Jack and Remove Existing Bearings.
(41 Required)

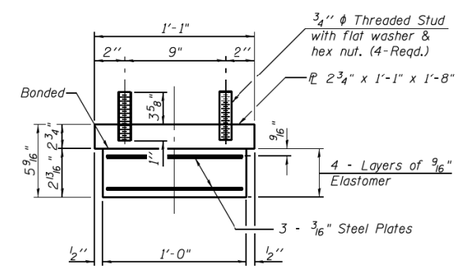

BEARING ASSEMBLY 2

Shim plates shall not be placed under Bearing Assembly.

JACK AND REMOVE EXISTING BEARINGS PROCEDURE - UNIT II & III

A. The Contractor shall submit for approval by the Engineer, plans for jacking existing bearings and installing new bearings prior to commencing any related work.
B. Jacking and removing existing bearings shall be done after the existing deck is removed and prior to placing the new deck, except as noted herein:
   1. At Piers C4, C9 and C12, jacking and removing existing bearings for beams 8 and 9 will be done with the existing deck remaining in place and with live load traffic.
   2. At Piers C6, C7, C8, and C11, jacking and removing existing bearing for beam 9 will be done with existing deck remaining in place and with live load traffic.
   3. The jacking system at these locations shall be designed to support dead load and full live load (with impact).
C. See table below for dead load reaction, live load plus impact reaction, and minimum jack capacities per beam at each Pier.
D. The new concrete pedestals shall be poured and cured prior to the lowering and removal of the jacks.

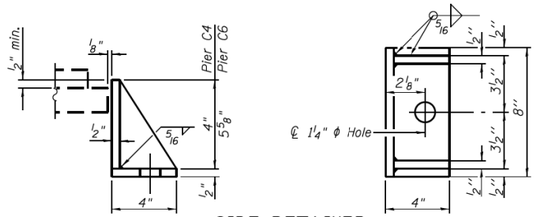

SIDE RETAINER

Equivalent rolled angle with stiffeners will be allowed in lieu of welded plates.

BEAM REACTIONS

(With deck removed. Applicable to all beams, except beams 8 and 9)

Pier	RL (kips)	Min. Jack Capacity (kips)
C4 (East)	5.5	9
C6	20.2	31
C7	20.2	31
C8	18.8	21
C9 (West)	5.5	9
C9 (East)	8.3	13
C11	26.1	40
C12 (West)	11.1	17

BEAM REACTIONS

(With deck remaining in place. Applicable to beams 8 and 9 only)

Pier	RL (kips)	RL+IM (kips)	Min. Jack Capacity (kips)
C4 (East)	28.3	57.2	129
C6	105.1	77.1	274
C7	97.9	77.2	263
C8	92.6	73.7	250
C9 (West)	28.3	57.2	129
C9 (East)	36.8	57.9	143
C11	109.2	78.0	281
C12 (West)	44.0	58.4	154

Notes:

Diaphragm removal and reinstallation may be required to facilitate drilling holes. Cost included with Elastomeric Bearing Assembly, Type I.

Prior to ordering any material, the Contractor shall verify in the field all bearing height and shim thickness dimensions.

Anchor bolts shall be ASTM F1554 all-thread (or an Engineer-approved alternate material) of the grade(s) and diameter(s) specified. The corresponding specified grade of AASHTO M314 anchor bolts may be used in lieu of ASTM F1554.

Anchor bolts for side retainers may be cast in place or installed in holes drilled before or after members are in place.

Drilled and set anchor bolts shall be installed according to Article 521.06 of the Standard Specifications.

Side retainers and other steel members required for the elastomeric bearing assembly shall be included in the cost of Elastomeric Bearing Assembly, Type I.

Two ⅛" adjusting shims shall be provided for each bearing in addition to all other plates or shims and placed as shown on bearing details.

BILL OF MATERIAL

Item	Unit	Total
Elastomeric Bearing Assembly, Type I	Each	18
Anchor Bolts, 1"	Each	36
Jack and Remove Existing Bearings	Each	92

0160461-60X78-S096-BRG.dgn

PARSONS BRINCKERHOFF	USER NAME = poteld	DESIGNED - IJL	REVISED -	STATE OF ILLINOIS DEPARTMENT OF TRANSPORTATION	BEARING DETAILS I- UNIT II STRUCTURE NO. 016-0461	F.A.I. RTE.	SECTION	COUNTY	TOTAL SHEETS	SHEET NO.
		CHECKED - PJL	REVISED -			90/94/290	2014-004 R&B (WB)	COOK	706	373
	PLOT SCALE = N.T.S.	DRAWN - IJL/DCP	REVISED -					CONTRACT NO. 60X78		
	PLOT DATE = 3/23/2016	CHECKED - JIG	REVISED -		SHEET NO. S2-96 OF S2-145 SHEETS			ILLINOIS FED. AID PROJECT		

HBM ENGINEERING GROUP, LLC	USER NAME = ahmad.issa	DESIGNED -	REVISED -	STATE OF ILLINOIS DEPARTMENT OF TRANSPORTATION	EXISTING RECORD DRAWINGS	F.A.I. RTE.	SECTION	COUNTY	TOTAL SHEETS	SHEET NO.
		CHECKED -	REVISED -			90/94/290	2014-013R&B-R	COOK	1972	1738
	PLOT SCALE = N.T.S	DRAWN -	REVISED -					CONTRACT NO. 60X93		
	PLOT DATE = 7/26/2018	CHECKED - MI, MAI	REVISED -					ILLINOIS FED. AID PROJECT		

FILE NAME: pw:\\617479-PWINT.aecomonline.local:AECOM_DS02_NA\Documents\01 Americas\Transportation\60269938 Circle\Phase_II\000_CAD\008_Structural\Structure_016-1718\Existing Plans\33906-60X93-SXX-Existing161

2:21:58 PM

FOR INFORMATION ONLY

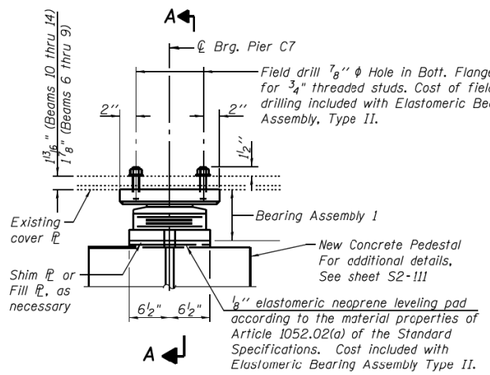

ELEVATION AT PIER C7

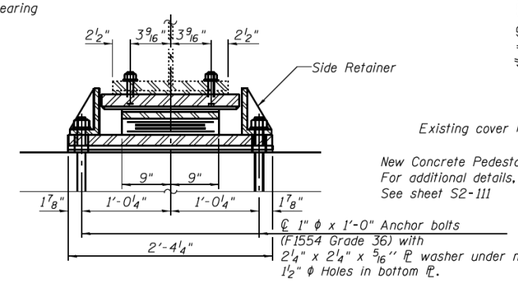

SECTION A-A

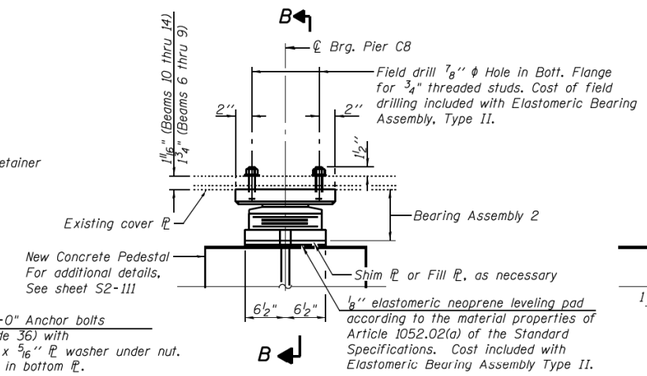

ELEVATION AT PIER C8

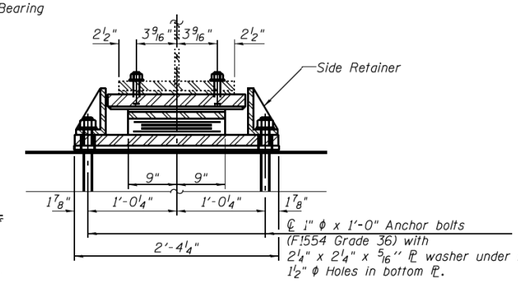

SECTION B-B

TYPE II ELASTOMERIC EXP. BRG. AT PIER C7

(9 Required)

TYPE II ELASTOMERIC EXP. BRG. AT PIER C8

(9 Required)

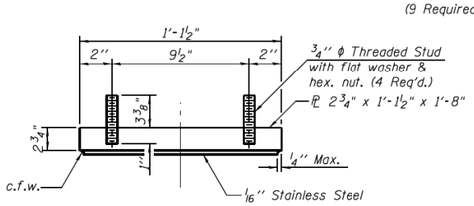

TOP BEARING ASSEMBLY 1

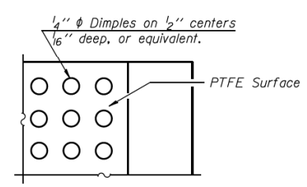

PLAN-PTFE SURFACE

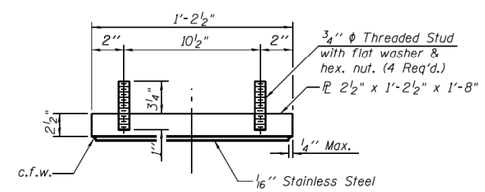

TOP BEARING ASSEMBLY 2

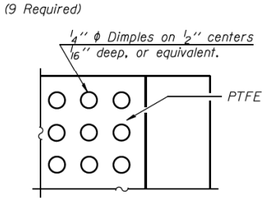

PLAN-PTFE SURFACE

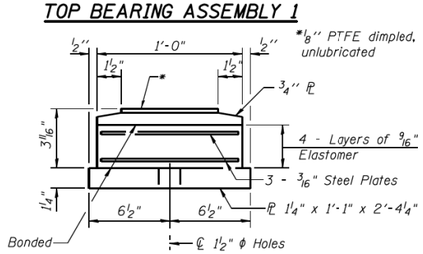

BOTTOM BEARING ASSEMBLY 1

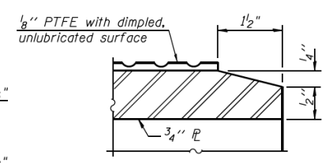

SECTION THRU PTFE

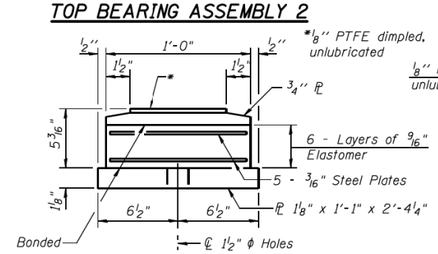

BOTTOM BEARING ASSEMBLY 2

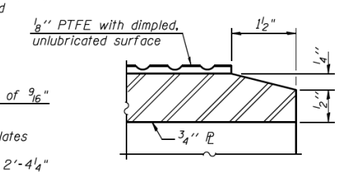

SECTION THRU PTFE

Notes:

For bearing removal details and quantity, see sheet S2-96.

Diaphragm removal and reinstallation may be required to facilitate drilling holes. Cost included with Elastomeric Bearing Assembly Type II.

Prior to ordering any material, the Contractor shall verify in the field all bearing height and shim thickness dimensions.

Anchor bolts shall be ASTM F1554 all-thread (or an Engineer-approved alternate material) of the grade(s) and diameter(s) specified. The corresponding specified grade of AASHTO M314 anchor bolts may be used in lieu of ASTM F1554.

Anchor bolts for Type II bearings shall be placed in holes drilled in the concrete through holes in the bottom bearing plate after members are in place. Side retainers shall be placed after bolts are installed.

Drilled and set anchor bolts shall be installed according to Article 521.06 of the Standard Specifications.

Side retainers and other steel members required for the elastomeric bearing assembly shall be included in the cost of Elastomeric Bearing Assembly, Type II.

The 1/8" PTFE sheet shall be bonded directly to the top steel plate with a two-component, medium viscosity epoxy resin, conforming to the requirements of the Federal Specification MMM-A-134, Type I. The bond agent shall be applied on the full area of the contact surfaces.

Bonding of 1/8" PTFE sheet during vulcanizing process will be permitted provided the process and method of adjusting assembly height is approved by the Engineer.

Two 1/8" adjusting shims shall be provided for each bearing in addition to all other plates or shims and placed as shown on bearing details.

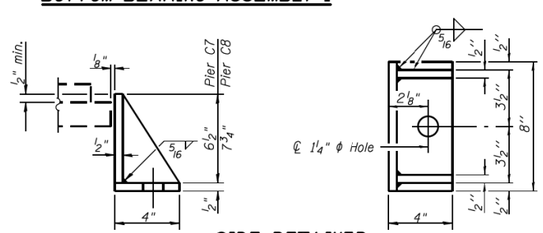

SIDE RETAINER

Equivalent rolled angle with stiffeners will be allowed in lieu of welded plates.

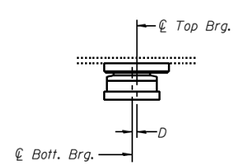

BELOW 50°F.
(Move bott. brg. away from fixed brg.)

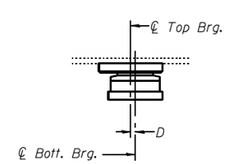

ABOVE 50°F.
(Move bott. brg. toward fixed brg.)

SETTING ANCHOR BOLTS AT EXP. BRG.

D=1/8" per each 100' of expansion for every 15° temp. change from the normal temp. of 50°F.

FILL PLATE THICKNESS TABLE AT PIERS C7 & C8

Pier	Beam No.	Thickness
C7	10	1/8"
C8	10	1/4"

BILL OF MATERIAL

Item	Unit	Total
Elastomeric Bearing Assembly, Type II	Each	18
Anchor Bolts 1"	Each	36

PARSONS BRINCKERHOFF

USER NAME = poteld	DESIGNED - JJL	REVISED -
	CHECKED - PJL	REVISED -
PLOT SCALE = N.T.S.	DRAWN - JJL/DCP	REVISED -
PLOT DATE = 3/23/2016	CHECKED - JIG	REVISED -

STATE OF ILLINOIS
DEPARTMENT OF TRANSPORTATION

BEARING DETAILS II – UNIT II
STRUCTURE NO. 016–0461
SHEET NO. S2-97 OF S2-145 SHEETS

F.A.I. RTE.	SECTION	COUNTY	TOTAL SHEETS	SHEET NO.
90/94/290	2014-004 R&B (WB)	COOK	706	374
		CONTRACT NO. 60X78		
		ILLINOIS FED. AID PROJECT		

HBM ENGINEERING GROUP, LLC

USER NAME = ahmad.issa	DESIGNED -	REVISED -
	CHECKED -	REVISED -
PLOT SCALE = N.T.S	DRAWN -	REVISED -
PLOT DATE = 7/26/2018	CHECKED - MI, MAI	REVISED -

STATE OF ILLINOIS
DEPARTMENT OF TRANSPORTATION

EXISTING RECORD DRAWINGS

F.A.I. RTE.	SECTION	COUNTY	TOTAL SHEETS	SHEET NO.
90/94/290	2014-013R&B-R	COOK	1972	1739
		CONTRACT NO. 60X93		
		ILLINOIS FED. AID PROJECT		

FILE NAME: pw:\\617479-PWINT.aecomonline.local:AECOM_DS02_NA\Documents\01 Americas\Transportation\60269938 Circle\Phase_II\000_CAD\008_Structural\Structure_016-1718\Existing Plans\33906-60X93-SXX-Existing162

2:22:07 PM

0160461-60X78-S097-BRG.dgn

FOR INFORMATION ONLY

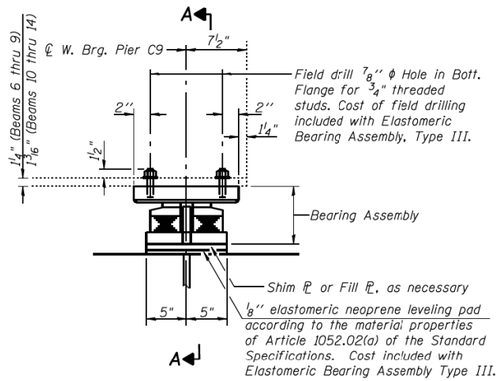

ELEVATION AT W. BRG. PIER C9

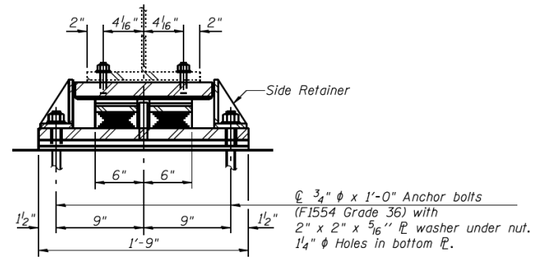

SECTION A-A

TYPE III ELASTOMERIC EXP. BRG. AT W. BRG. PIER C9

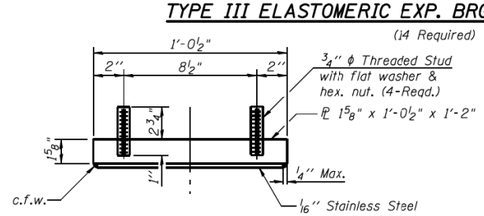

TOP BEARING ASSEMBLY

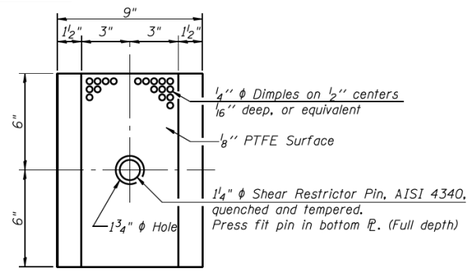

PLAN-PTFE ELASTOMERIC BRG.

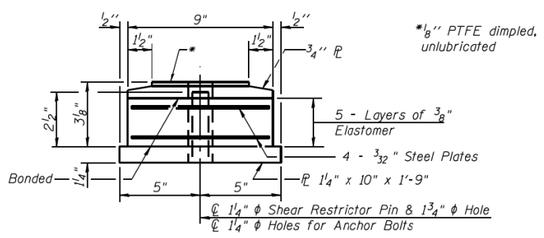

BOTTOM BEARING ASSEMBLY

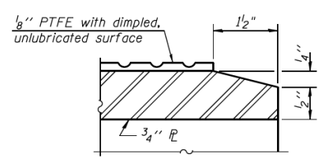

SECTION THRU PTFE

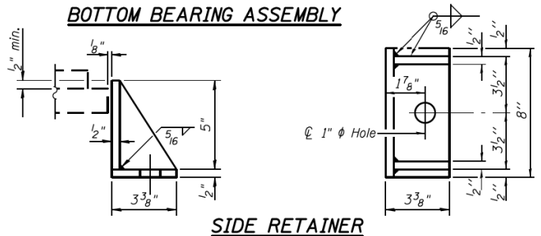

SIDE RETAINER

Equivalent rolled angle with stiffeners will be allowed in lieu of welded plates.

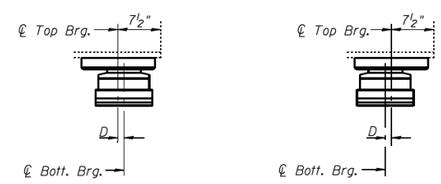

BELOW 50° F.
(Move bottom brg. away from fixed brg.)

ABOVE 50° F.
(Move bottom brg. toward fixed brg.)

SETTING ANCHOR BOLTS AT EXP. BRG.

D=⅛" per each 100' of expansion for every 15° temp. change from the normal temp. of 50° F.

Notes:

For bearing removal details and quantity, see sheet S2-96.

Diaphragm removal and reinstallation may be required to facilitate drilling holes. Cost included with Elastomeric Bearing Assembly, Type III.

Prior to ordering any material, the Contractor shall verify in the field all bearing height and shim thickness dimensions.

Anchor bolts shall be ASTM F1554 all-thread (or an Engineer-approved alternate material) of the grade(s) and diameter(s) specified. The corresponding specified grade of AASHTO M314 anchor bolts may be used in lieu of ASTM F1554.

Anchor bolts for Type III bearings shall be placed in holes drilled in the concrete through holes in the bottom bearing plate after members are in place. Side retainers shall be placed after bolts are installed.

Drilled and set anchor bolts shall be installed according to Article 521.06 of the Standard Specifications.

Side retainers and other steel members required for the elastomeric bearing assembly shall be included in the cost of Elastomeric Bearing Assembly, Type III.

The ⅛" PTFE sheet shall be bonded directly to the top steel plate with a two-component, medium viscosity epoxy resin, conforming to the requirements of the Federal Specification MMM-A-134, Type I. The bond agent shall be applied on the full area of the contact surfaces.

Bonding of ⅛" PTFE sheet during vulcanizing process will be permitted provided the process and method of adjusting assembly height is approved by the Engineer.

Two ⅛" adjusting shims shall be provided for each bearing in addition to all other plates or shims and placed as shown on bearing details.

FILL PLATE THICKNESS TABLE AT E. BRG. PIER C9

Beam No.	Thickness
9	¾"
10	1"
11	⅜"

BILL OF MATERIAL

Item	Unit	Total
Elastomeric Bearing Assembly, Type III	Each	14
Anchor Bolts ¾"	Each	28

0160461-60X78-S098-BRG.dgn

PARSONS BRINCKERHOFF	USER NAME = pateld	DESIGNED - IJL	REVISED -	STATE OF ILLINOIS DEPARTMENT OF TRANSPORTATION	BEARING DETAILS III – UNIT II STRUCTURE NO. 016-0461	F.A.I. RTE.	SECTION	COUNTY	TOTAL SHEETS	SHEET NO.
		CHECKED - PJL	REVISED -			90/94/290	2014-004 R&B (WB)	COOK	706	375
	PLOT SCALE = N.T.S.	DRAWN - IJL/DCP	REVISED -					CONTRACT NO. 60X78		
	PLOT DATE = 3/23/2016	CHECKED - JIG	REVISED -		SHEET NO. S2-98 OF S2-145 SHEETS			ILLINOIS FED. AID PROJECT		

HBM ENGINEERING GROUP, LLC	USER NAME = ahmad.issa	DESIGNED -	REVISED -	STATE OF ILLINOIS DEPARTMENT OF TRANSPORTATION	EXISTING RECORD DRAWINGS	F.A.I. RTE.	SECTION	COUNTY	TOTAL SHEETS	SHEET NO.
		CHECKED -	REVISED -			90/94/290	2014-013R&B-R	COOK	1972	1740
	PLOT SCALE = N.T.S	DRAWN -	REVISED -					CONTRACT NO. 60X93		
	PLOT DATE = 7/26/2018	CHECKED - MI, MAI	REVISED -					ILLINOIS FED. AID PROJECT		

FILE NAME: pw:\\617479-PWINT.aecomonline.local:AECOM_DS02_NA\Documents\01 Americas\Transportation\60269938 Circle\Phase_II\000_CAD\008_Structural\Structure_016-1718\Existing Plans\33906-60X93-SXX-Existing163

2:22:17 PM

FOR INFORMATION ONLY

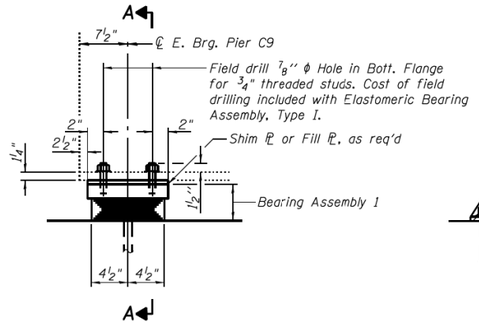

ELEVATION AT E. BRG. PIER C9

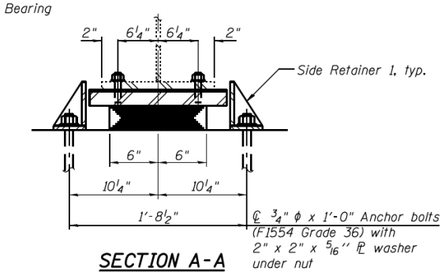

SECTION A-A

TYPE I ELASTOMERIC EXP. BRG. AT E. BRG. PIER C9

(14 Required)

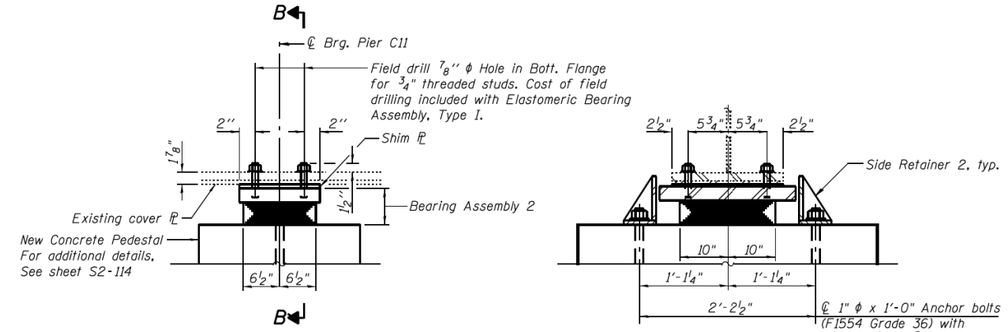

ELEVATION AT PIER C11

SECTION B-B

TYPE I ELASTOMERIC EXP. BRG. AT PIER C11

(14 Required)

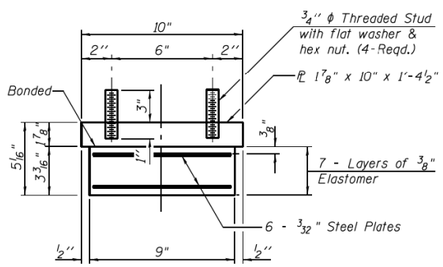

BEARING ASSEMBLY 1

Shim plates shall not be placed under Bearing Assembly.

Notes:

For bearing removal details and quantity, see sheet S2-96.

Diaphragm removal and reinstallation may be required to facilitate drilling holes. Cost included with Elastomeric Bearing Assembly, Type I.

Prior to ordering any material, the Contractor shall verify in the field all bearing height and shim thickness dimensions.

Anchor bolts shall be ASTM F1554 all-thread (or an Engineer-approved alternate material) of the grade(s) and diameter(s) specified. The corresponding specified grade of AASHTO M314 anchor bolts may be used in lieu of ASTM F1554.

Anchor bolts for side retainers may be cast in place or installed in holes drilled before or after members are in place.

Drilled and set anchor bolts shall be installed according to Article 521.06 of the Standard Specifications.

Side retainers and other steel members required for the elastomeric bearing assembly shall be included in the cost of Elastomeric Bearing Assembly, Type I.

Two ⅛" adjusting shims shall be provided for each bearing in addition to all other plates or shims and placed as shown on bearing details.

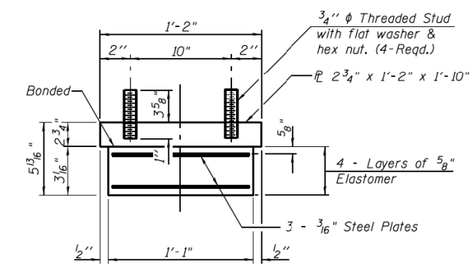

BEARING ASSEMBLY 2

Shim plates shall not be placed under Bearing Assembly.

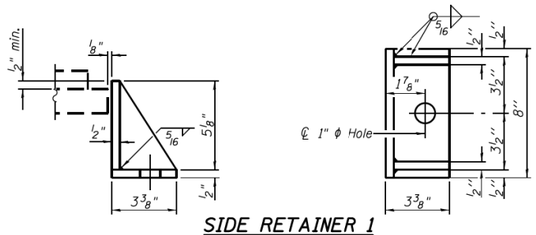

SIDE RETAINER 1

Equivalent rolled angle with stiffeners will be allowed in lieu of welded plates.

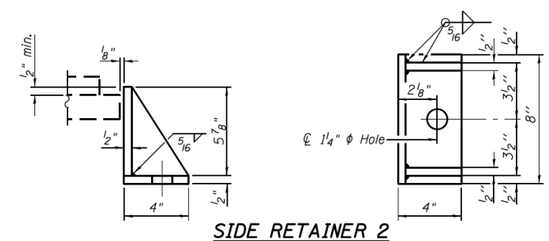

SIDE RETAINER 2

Equivalent rolled angle with stiffeners will be allowed in lieu of welded plates.

FILL PLATE THICKNESS TABLE AT E. BRG. PIER C9

Beam No.	Thickness
9	¾"
10	¾"
11	⅛"

BILL OF MATERIAL

Item	Unit	Total
Elastomeric Bearing Assembly, Type I	Each	28
Anchor Bolts, ¾"	Each	28
Anchor Bolts, 1"	Each	28

0160461-60X78-S099-BRG.dgn

PARSONS BRINCKERHOFF	USER NAME = poteld	DESIGNED - JJL	REVISED -	STATE OF ILLINOIS DEPARTMENT OF TRANSPORTATION	BEARING DETAILS I - UNIT III STRUCTURE NO. 016-0461	F.A.I. RTE.	SECTION	COUNTY / TOTAL SHEETS / SHEET NO.
		CHECKED - PJL	REVISED -			90/94/290	2014-004 R&B (WB)	COOK / 706 / 376
	PLOT SCALE = N.T.S.	DRAWN - JJL/DCP	REVISED -					CONTRACT NO. 60X78
	PLOT DATE = 4/25/2016	CHECKED - JIG	REVISED -		SHEET NO. S2-99 OF S2-145 SHEETS			ILLINOIS FED. AID PROJECT

HBM ENGINEERING GROUP, LLC	USER NAME = ahmad.issa	DESIGNED -	REVISED -	STATE OF ILLINOIS DEPARTMENT OF TRANSPORTATION	EXISTING RECORD DRAWINGS	F.A.I. RTE.	SECTION	COUNTY / TOTAL SHEETS / SHEET NO.
		CHECKED -	REVISED -			90/94/290	2014-013R&B-R	COOK / 1972 / 1741
	PLOT SCALE = N.T.S	DRAWN -	REVISED -					CONTRACT NO. 60X93
	PLOT DATE = 7/26/2018	CHECKED - MI, MAI	REVISED -					ILLINOIS FED. AID PROJECT

FILE NAME: pw:\\617479-PWINT.aecomonline.local:AECOM_DS02_NA\Documents\01 Americas\Transportation\60269938 Circle\Phase_II\000_CAD\008_Structural\Structure_016-1718\Existing Plans\33906-60X93-SXX-Existing164

2:22:26 PM

FOR INFORMATION ONLY

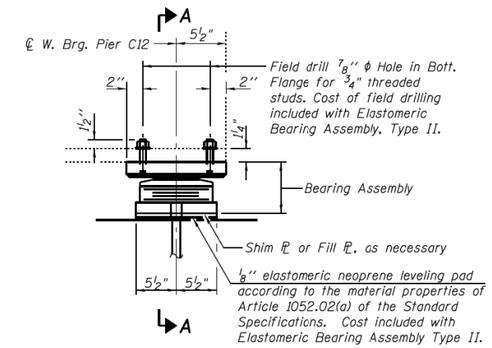

ELEVATION AT W. BRG. PIER C12

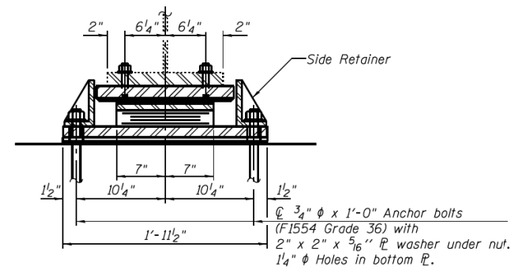

SECTION A-A

TYPE II ELASTOMERIC EXP. BRG. AT W. BRG. PIER C12

(14 Required)

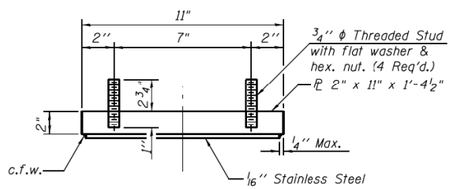

TOP BEARING ASSEMBLY

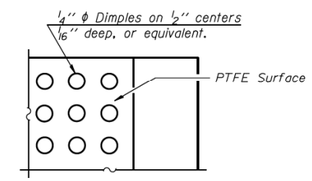

PLAN-PTFE SURFACE

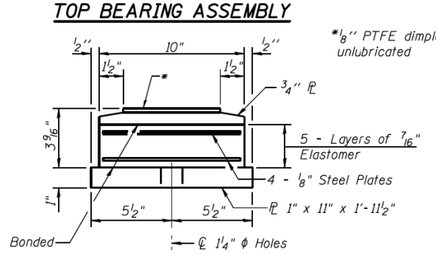

*⅛" PTFE dimpled, unlubricated

BOTTOM BEARING ASSEMBLY

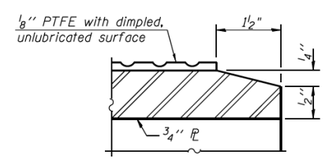

SECTION THRU PTFE

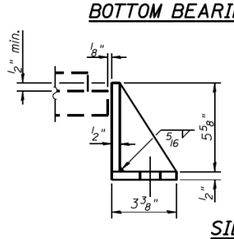

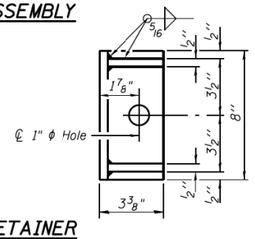

SIDE RETAINER

Equivalent rolled angle with stiffeners will be allowed in lieu of welded plates.

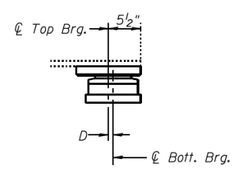

BELOW 50°F.

(Move bott. brg. away from fixed brg.)

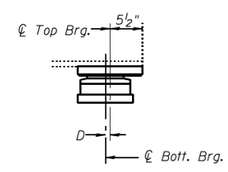

ABOVE 50°F.

(Move bott. brg. toward fixed brg.)

SETTING ANCHOR BOLTS AT EXP. BRG.

D=⅛" per each 100' of expansion for every 15° temp. change from the normal temp. of 50°F.

FILL PLATE THICKNESS TABLE AT W. BRG. PIER C12

Beam No.	Thickness
9	¾"
10	¾"
11	⅛"

Notes:

For bearing removal details and quantity, see sheet S2-96.

Diaphragm removal and reinstallation may be required to facilitate drilling holes. Cost included with Elastomeric Bearing Assembly, Type II.

Prior to ordering any material, the Contractor shall verify in the field all bearing height and shim thickness dimensions.

Anchor bolts shall be ASTM F1554 all-thread (or an Engineer-approved alternate material) of the grade(s) and diameter(s) specified. The corresponding specified grade of AASHTO M314 anchor bolts may be used in lieu of ASTM F1554.

Anchor bolts for Type II bearings shall be placed in holes drilled in the concrete through holes in the bottom bearing plate after members are in place. Side retainers shall be placed after bolts are installed.

Drilled and set anchor bolts shall be installed according to Article 521.06 of the Standard Specifications.

Side retainers and other steel members required for the elastomeric bearing assembly shall be included in the cost of Elastomeric Bearing Assembly, Type II.

The ⅛" PTFE sheet shall be bonded directly to the top steel plate with a two-component, medium viscosity epoxy resin, conforming to the requirements of the Federal Specification MMM-A-134, Type I. The bond agent shall be applied on the full area of the contact surfaces.

Bonding of ⅛" PTFE sheet during vulcanizing process will be permitted provided the process and method of adjusting assembly height is approved by the Engineer.

Two ⅛" adjusting shims shall be provided for each bearing in addition to all other plates or shims and placed as shown on bearing details.

BILL OF MATERIAL

Item	Unit	Total
Elastomeric Bearing Assembly, Type II	Each	14
Anchor Bolts ¾"	Each	28

PARSONS BRINCKERHOFF	USER NAME = poteld	DESIGNED - JJL	REVISED -
		CHECKED - PJL	REVISED -
	PLOT SCALE = N.T.S.	DRAWN - JJL/DCP	REVISED -
	PLOT DATE = 3/23/2016	CHECKED - JJG	REVISED -

STATE OF ILLINOIS
DEPARTMENT OF TRANSPORTATION

BEARING DETAILS II – UNIT III
STRUCTURE NO. 016–0461
SHEET NO. S2-100 OF S2-145 SHEETS

F.A.I. RTE.	SECTION	COUNTY	TOTAL SHEETS	SHEET NO.
90/94/290	2014-004 R&B (WB)	COOK	706	377
		CONTRACT NO. 60X78		
		ILLINOIS FED. AID PROJECT		

0160461-60X78-S100-BRG.dgn

HBM ENGINEERING GROUP, LLC	USER NAME = ahmad.issa	DESIGNED -	REVISED -
		CHECKED -	REVISED -
	PLOT SCALE = N.T.S	DRAWN -	REVISED -
	PLOT DATE = 7/26/2018	CHECKED - MI. MAI	REVISED -

STATE OF ILLINOIS
DEPARTMENT OF TRANSPORTATION

EXISTING RECORD DRAWINGS

F.A.I. RTE.	SECTION	COUNTY	TOTAL SHEETS	SHEET NO.
90/94/290	2014-013R&B-R	COOK	1972	1742
		CONTRACT NO. 60X93		
		ILLINOIS FED. AID PROJECT		

FILE NAME: pw:\\617479-PWINT.aecomonline.local:AECOM_DS02_NA\Documents\01 Americas\Transportation\60269938 Circle\Phase_II\000_CAD\008_Structural\Structural\Structure_016-1718\Existing Plans\33906-60X93-SXX-Existing165

2:22:34 PM

FOR INFORMATION ONLY

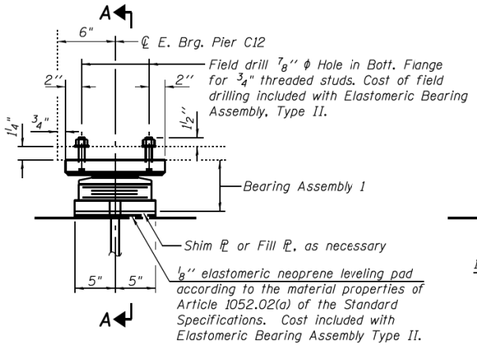

ELEVATION AT E. BRG. PIER C12

FILL PLATE THICKNESS TABLE AT E. BRG. PIER C12

Beam No.	Thickness
9	3/8"
10	5/8"

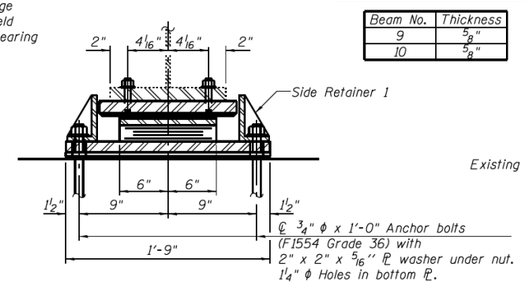

SECTION A-A

TYPE II ELASTOMERIC EXP. BRG. AT E. BRG. PIER C12

(10 Required)

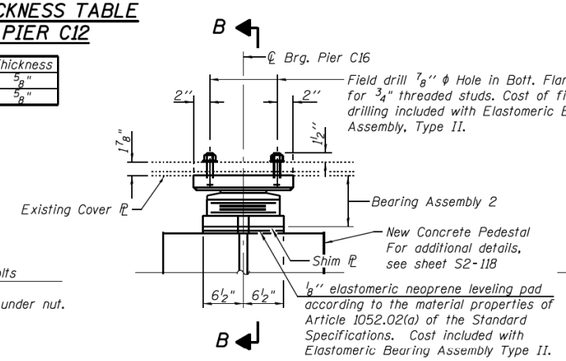

ELEVATION AT PIER C16

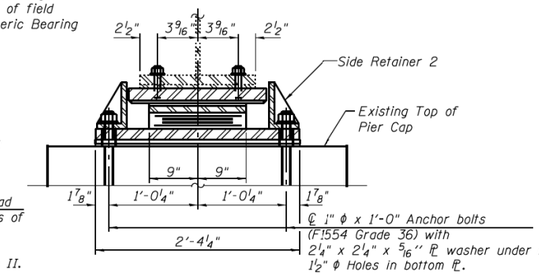

SECTION B-B

TYPE II ELASTOMERIC EXP. BRG. AT PIER C16

(10 Required)

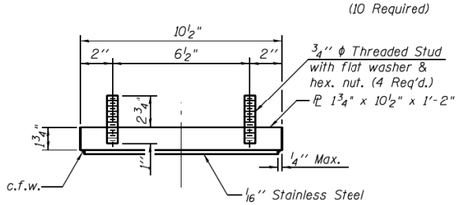

TOP BEARING ASSEMBLY 1

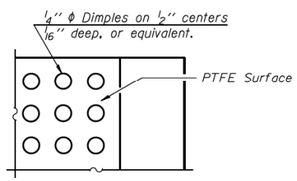

PLAN-PTFE SURFACE

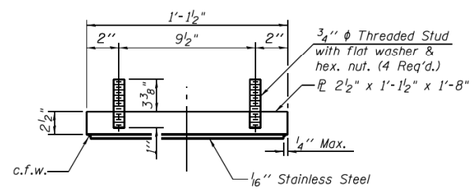

TOP BEARING ASSEMBLY 2

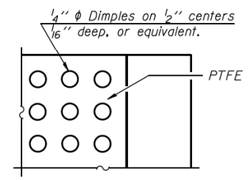

PLAN-PTFE SURFACE

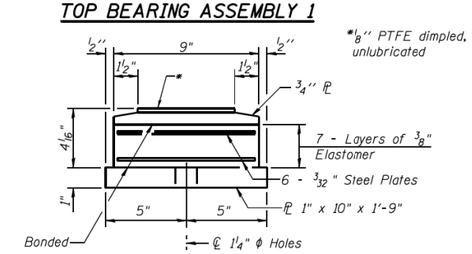

BOTTOM BEARING ASSEMBLY 1

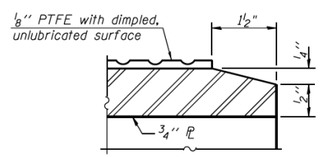

SECTION THRU PTFE

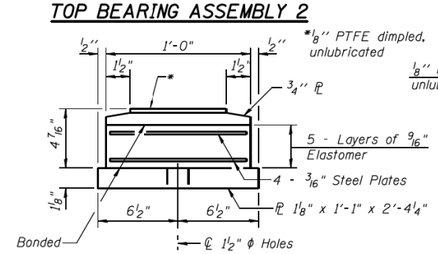

BOTTOM BEARING ASSEMBLY 2

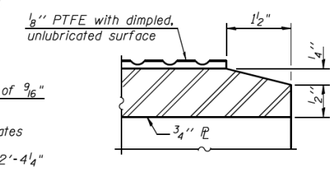

SECTION THRU PTFE

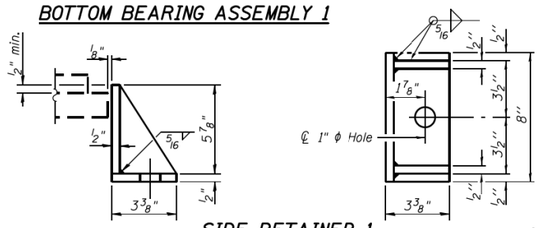

SIDE RETAINER 1

Equivalent rolled angle with stiffeners will be allowed in lieu of welded plates.

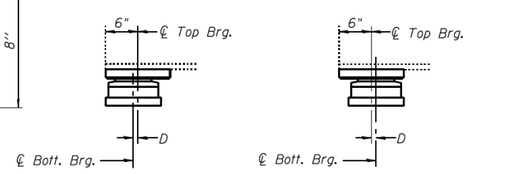

BELOW 50°F.
(Move bott. brg. away from fixed brg.)

ABOVE 50°F.
(Move bott. brg. toward fixed brg.)

SETTING ANCHOR BOLTS AT EXP. BRG.

(Pier C12 shown, Pier C16 similar except beam is continuous)

D=1/8" per each 100' of expansion for every 15° temp. change from the normal temp. of 50°F.

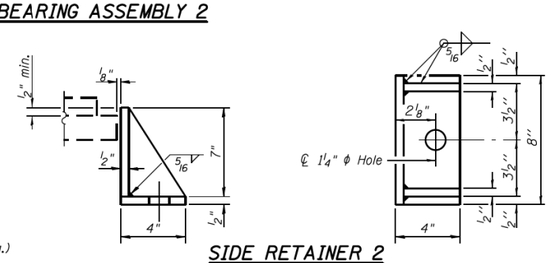

SIDE RETAINER 2

Equivalent rolled angle with stiffeners will be allowed in lieu of welded plates.

Notes:

For bearing removal details and quantity, see sheet S2-102.

Diaphragm removal and reinstallation may be required to facilitate drilling holes. Cost included with Elastomeric Bearing Assembly, Type II.

Prior to ordering any material, the Contractor shall verify in the field all bearing height and shim thickness dimensions.

Anchor bolts shall be ASTM F1554 all-thread (or an Engineer-approved alternate material) of the grade(s) and diameter(s) specified. The corresponding specified grade of AASHTO M314 anchor bolts may be used in lieu of ASTM F1554.

Anchor bolts for Type II bearings shall be placed in holes drilled in the concrete through holes in the bottom bearing plate after members are in place. Side retainers shall be placed after bolts are installed.

Drilled and set anchor bolts shall be installed according to Article 521.06 of the Standard Specifications.

Side retainers and other steel members required for the elastomeric bearing assembly shall be included in the cost of Elastomeric Bearing Assembly, Type II.

The 1/8" PTFE sheet shall be bonded directly to the top steel plate with a two-component, medium viscosity epoxy resin, conforming to the requirements of the Federal Specification MMM-A-134, Type I. The bond agent shall be applied on the full area of the contact surfaces.

Bonding of 1/8" PTFE sheet during vulcanizing process will be permitted provided the process and method of adjusting assembly height is approved by the Engineer.

Two 1/8" adjusting shims shall be provided for each bearing in addition to all other plates or shims and placed as shown on bearing details.

BILL OF MATERIAL

Item	Unit	Total
Elastomeric Bearing Assembly, Type II	Each	20
Anchor Bolts 1"	Each	20
Anchor Bolts 3/4"	Each	20

0160461-60X78-S101-BRG.dgn

PARSONS BRINCKERHOFF	USER NAME = poteld	DESIGNED - IJL	REVISED -	STATE OF ILLINOIS DEPARTMENT OF TRANSPORTATION	BEARING DETAILS I – UNIT IV STRUCTURE NO. 016–0461	F.A.I. RTE.	SECTION	COUNTY	TOTAL SHEETS	SHEET NO.
		CHECKED - PJL	REVISED -			90/94/290	2014-004 R&B (WB)	COOK	706	378
	PLOT SCALE = N.T.S.	DRAWN - IJL/DCP	REVISED -					CONTRACT NO. 60X78		
	PLOT DATE = 3/23/2016	CHECKED - JIG	REVISED -		SHEET NO. S2-101 OF S2-145 SHEETS			ILLINOIS FED. AID PROJECT		

HBM ENGINEERING GROUP, LLC	USER NAME = ahmad.issa	DESIGNED -	REVISED -	STATE OF ILLINOIS DEPARTMENT OF TRANSPORTATION	EXISTING RECORD DRAWINGS	F.A.I. RTE.	SECTION	COUNTY	TOTAL SHEETS	SHEET NO.
		CHECKED -	REVISED -			90/94/290	2014-013R&B-R	COOK	1972	1743
	PLOT SCALE = N.T.S	DRAWN -	REVISED -					CONTRACT NO. 60X93		
	PLOT DATE = 7/26/2018	CHECKED - MI, MAI	REVISED -					ILLINOIS FED. AID PROJECT		

FILE NAME: pw:\\617479-PWINT.aecomonline.local:AECOM_DS02_NA\Documents\01 Americas\Transportation\60269938 Circle\Phase_II\000_CAD\008_Structural\Structure_016-1718\Existing Plans\33906-60X93-SXX-Existing166

2:22:42 PM

FOR INFORMATION ONLY

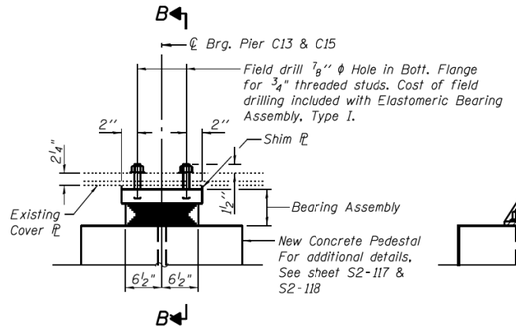

ELEVATION AT PIERS C13 & C15

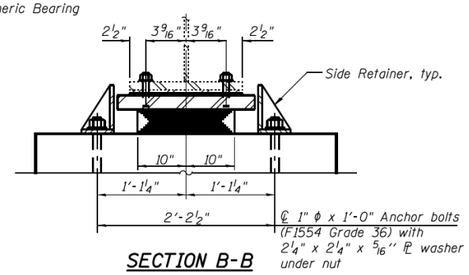

SECTION B-B

TYPE I ELASTOMERIC EXP. BRG. AT PIERS C13 & C15

(10 Required at Pier C13 and 10 Required at Pier C15)

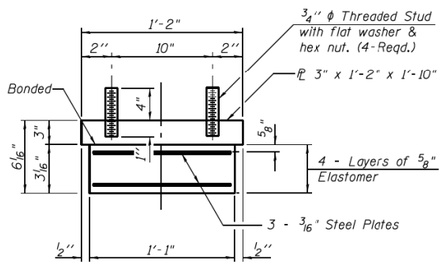

BEARING ASSEMBLY

(At Pier C13 & C15)

Shim plates shall not be placed under Bearing Assembly.

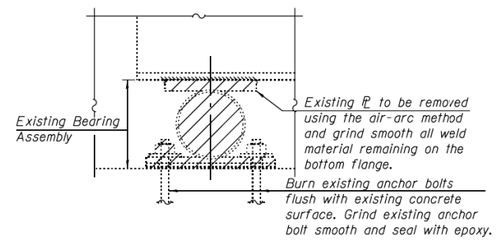

EXISTING BEARING REMOVAL DETAIL
PIER C12

Cost included with Jack and Remove Existing Bearings.
(15 Required)

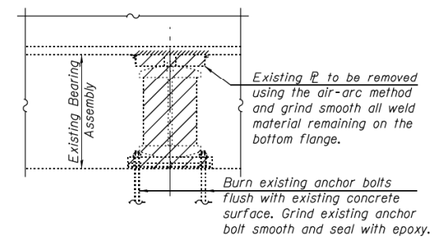

EXISTING BEARING REMOVAL DETAIL
PIERS C13, C15 & C16

Cost included with Jack and Remove Existing Bearings.
(35 Required)

JACK AND REMOVE EXISTING BEARINGS PROCEDURE - UNIT IV

A. The Contractor shall submit for approval by the Engineer, plans for jacking existing bearings and installing new bearings prior to commencing any related work.
B. Jacking and removing existing bearings shall be done with existing deck remaining in place and without live load traffic, except for beam 9 which will support live load traffic during jacking and removing existing bearing.
C. The jacking system for beam 9 shall be designed to support dead load and full live load (with impact).
D. See table below for dead load reaction, live load plus impact reaction, and minimum jack capacities per beam at each Pier.
E. The new concrete pedestals shall be poured and cured prior to the lowering and removal of the jacks.

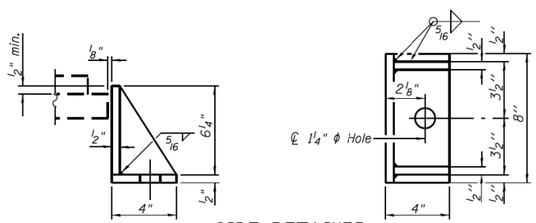

SIDE RETAINER

Equivalent rolled angle with stiffeners will be allowed in lieu of welded plates.

BEAM REACTIONS

(Applicable to all beams, except Beam 9)

Pier	RL (kips)	Min. Jack Capacity (kips)
C12 (East)	36.6	55
C13	109.3	164
C15	105.8	159
C16	90.2	136

BEAM REACTIONS

(Applicable to Beam 9 only)

Pier	RL (kips)	RL+IM (kips)	Min. Jack Capacity (kips)
C12 (East)	36.6	58.3	143
C13	109.3	81.3	286
C15	105.8	80.8	280
C16	90.2	74.5	248

Notes:

Diaphragm removal and reinstallation may be required to facilitate drilling holes. Cost included with Elastomeric Bearing Assembly, Type I.

Prior to ordering any material, the Contractor shall verify in the field all bearing height and shim thickness dimensions.

Anchor bolts shall be ASTM F1554 all-thread (or an Engineer-approved alternate material) of the grade(s) and diameter(s) specified. The corresponding specified grade of AASHTO M314 anchor bolts may be used in lieu of ASTM F1554.

Anchor bolts for side retainers may be cast in place or installed in holes drilled before or after members are in place.

Drilled and set anchor bolts shall be installed according to Article 521.06 of the Standard Specifications.

Side retainers and other steel members required for the elastomeric bearing assembly shall be included in the cost of Elastomeric Bearing Assembly, Type I.

Two 1/8" adjusting shims shall be provided for each bearing in addition to all other plates or shims and placed as shown on bearing details.

BILL OF MATERIAL

Item	Unit	Total
Elastomeric Bearing, Assembly, Type I	Each	20
Anchor Bolts, 1"	Each	40
Jack and Remove Existing Bearings	Each	50

0160461-60X78-S102-BRG.dgn

PARSONS BRINCKERHOFF	USER NAME = poteld	DESIGNED - JJL	REVISED -	STATE OF ILLINOIS DEPARTMENT OF TRANSPORTATION	BEARING DETAILS II – UNIT IV STRUCTURE NO. 016–0461	F.A.I. RTE.	SECTION	COUNTY	TOTAL SHEETS	SHEET NO.
		CHECKED - PJL	REVISED -			90/94/290	2014-004 R&B (WB)	COOK	706	379
	PLOT SCALE = N.T.S.	DRAWN - JJL/DCP	REVISED -					CONTRACT NO. 60X78		
	PLOT DATE = 3/23/2016	CHECKED - JIG	REVISED -		SHEET NO. S2-102 OF S2-145 SHEETS		ILLINOIS FED. AID PROJECT			

HBM ENGINEERING GROUP, LLC	USER NAME = ahmad.issa	DESIGNED -	REVISED -	STATE OF ILLINOIS DEPARTMENT OF TRANSPORTATION	EXISTING RECORD DRAWINGS	F.A.I. RTE.	SECTION	COUNTY	TOTAL SHEETS	SHEET NO.
		CHECKED -	REVISED -			90/94/290	2014-013R&B-R	COOK	1972	1744
	PLOT SCALE = N.T.S	DRAWN -	REVISED -					CONTRACT NO. 60X93		
	PLOT DATE = 7/26/2018	CHECKED - MI, MAI	REVISED -				ILLINOIS	FED. AID PROJECT		

FILE NAME: pw:\\617479-PWINT.aecomonline.local:AECOM_DS02_NA\Documents\01 Americas\Transportation\60269938 Circle\Phase_II\000_CAD\008_Structural\Structure_016-1718\Existing Plans\33906-60X93-SXX-Existing167

2:22:52 PM

FOR INFORMATION ONLY

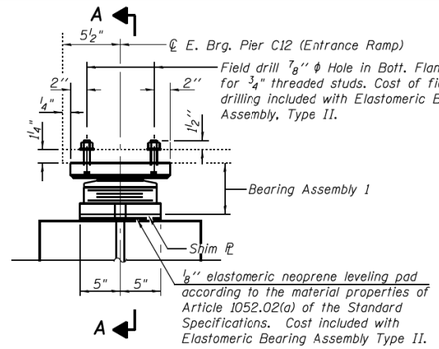

ELEVATION AT E. BRG. PIER C12

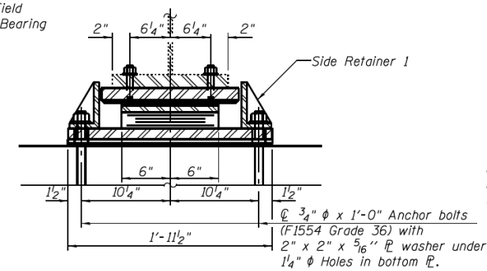

SECTION A-A

TYPE II ELASTOMERIC EXP. BRG. AT E. BRG. PIER C12 (ENTRANCE RAMP)

(5 Required)

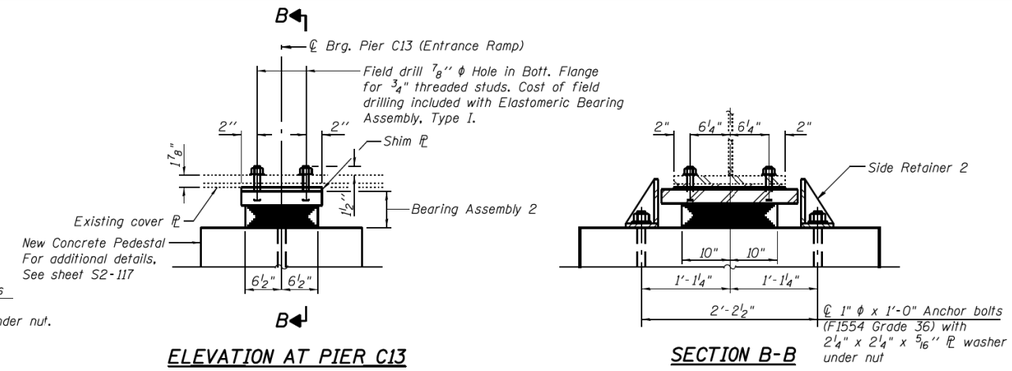

ELEVATION AT PIER C13

SECTION B-B

TYPE I ELASTOMERIC EXP. BRG. AT PIER C13 (ENTRANCE RAMP)

(5 Required)

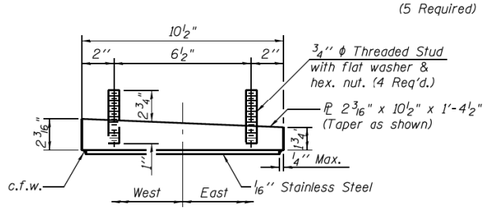

TOP BEARING ASSEMBLY 1

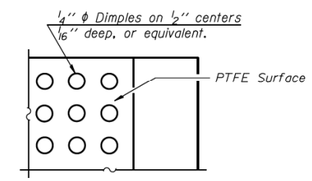

PLAN-PTFE SURFACE

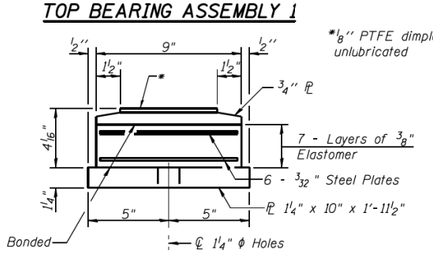

BOTTOM BEARING ASSEMBLY 1

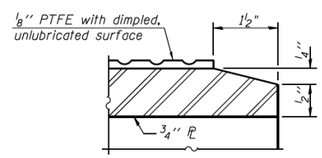

SECTION THRU PTFE

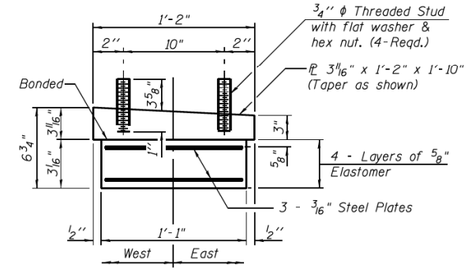

BEARING ASSEMBLY 2

Shim plates shall not be placed under Bearing Assembly.

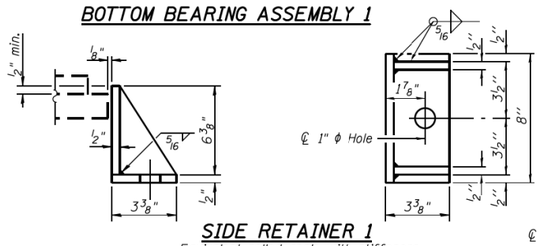

SIDE RETAINER 1

Equivalent rolled angle with stiffeners will be allowed in lieu of welded plates.

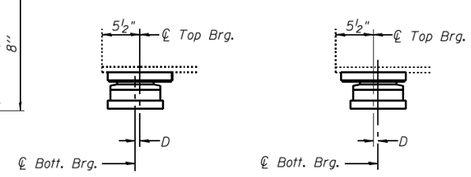

BELOW 50°F. (Move bott. brg. away from fixed brg.)

ABOVE 50°F. (Move bott. brg. toward fixed brg.)

SETTING ANCHOR BOLTS AT EXP. BRG.

D=⅛" per each 100' of expansion for every 15° temp. change from the normal temp. of 50°F.

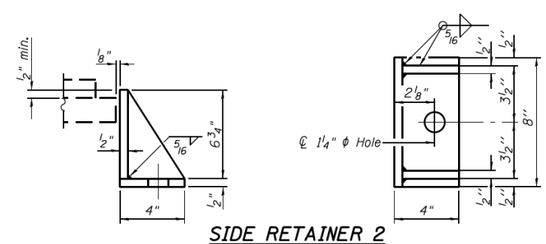

SIDE RETAINER 2

Equivalent rolled angle with stiffeners will be allowed in lieu of welded plates.

Notes:

For bearing removal details and quantity, see sheet S2-102.

Diaphragm removal and reinstallation may be required to facilitate drilling holes. Cost included with Elastomeric Bearing Assembly Type I or Elastomeric Bearing Assembly Type II as applicable.

Prior to ordering any material, the Contractor shall verify in the field all bearing height and shim thickness dimensions.

Anchor bolts shall be ASTM F1554 all-thread (or an Engineer-approved alternate material) of the grade(s) and diameter(s) specified. The corresponding specified grade of AASHTO M314 anchor bolts may be used in lieu of ASTM F1554.

Anchor bolts for Type I side retainers may be cast in place or installed in holes drilled before or after members are in place.

Anchor bolts for Type II bearings shall be placed in holes drilled in the concrete through holes in the bottom bearing plate after members are in place. Side retainers shall be placed after bolts are installed.

Drilled and set anchor bolts shall be installed according to Article 521.06 of the Standard Specifications.

Side retainers and other steel members required for the elastomeric bearing assembly shall be included in the cost of Elastomeric Bearing Assembly Type I or Elastomeric Bearing Assembly Type II as applicable.

The ⅛" PTFE sheet shall be bonded directly to the top steel plate with a two-component, medium viscosity epoxy resin, conforming to the requirements of the Federal Specification MMM-A-134, Type I. The bond agent shall be applied on the full area of the contact surfaces.

Bonding of ⅛" PTFE sheet during vulcanizing process will be permitted provided the process and method of adjusting assembly height is approved by the Engineer.

Two ⅛" adjusting shims shall be provided for each bearing in addition to all other plates or shims and placed as shown on bearing details.

BILL OF MATERIAL

Item	Unit	Total
Elastomeric Bearing Assembly, Type I	Each	5
Elastomeric Bearing Assembly, Type II	Each	5
Anchor Bolts, ¾"	Each	10
Anchor Bolts, 1"	Each	10

0160461-60X78-S103-BRG.dgn

PARSONS BRINCKERHOFF	USER NAME = poteld	DESIGNED - IJL	REVISED -	STATE OF ILLINOIS DEPARTMENT OF TRANSPORTATION	BEARING DETAILS – ENTRANCE RAMP STRUCTURE NO. 016–0461	F.A.I. RTE.	SECTION	COUNTY	TOTAL SHEETS / SHEET NO.
		CHECKED - PJL	REVISED -			90/94/290	2014-004 R&B (WB)	COOK	706 / 380
	PLOT SCALE = N.T.S.	DRAWN - IJL/DCP	REVISED -					CONTRACT NO. 60X78	
	PLOT DATE = 3/23/2016	CHECKED - JIG	REVISED -		SHEET NO. S2-103 OF S2-145 SHEETS			ILLINOIS FED. AID PROJECT	

HBM ENGINEERING GROUP, LLC	USER NAME = ahmad.issa	DESIGNED -	REVISED -	STATE OF ILLINOIS DEPARTMENT OF TRANSPORTATION	EXISTING RECORD DRAWINGS	F.A.I. RTE.	SECTION	COUNTY	TOTAL SHEETS / SHEET NO.
		CHECKED -	REVISED -			90/94/290	2014-013R&B-R	COOK	1972 / 1745
	PLOT SCALE = N.T.S	DRAWN -	REVISED -					CONTRACT NO. 60X93	
	PLOT DATE = 7/26/2018	CHECKED - MI, MAI	REVISED -					ILLINOIS FED. AID PROJECT	

FILE NAME: pw:\\617479-PWINT.aecomonline.local:AECOM_DS02_NA\Documents\01 Americas\Transportation\60269938 Circle\Phase_II\000_CAD\008_Structural\Structure_016-1718\Existing Plans\33906-60X93-SXX-Existing168

2:23:01 PM

FOR INFORMATION ONLY

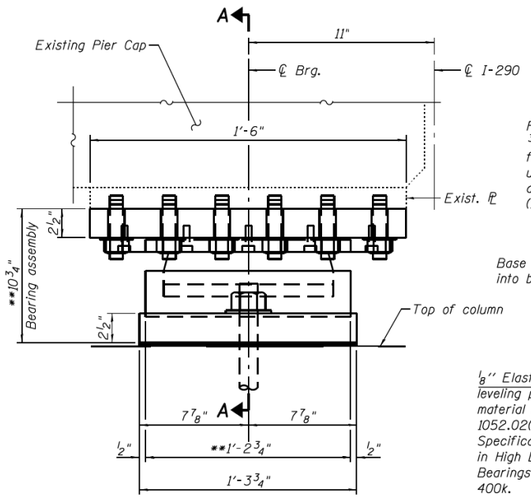

ELEVATION

(Looking East, WB bearing shown, EB similar)

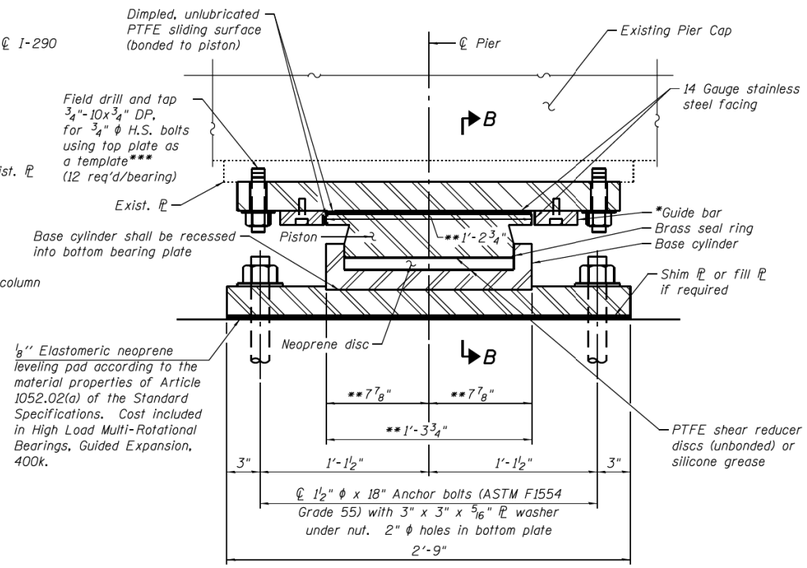

SECTION A-A

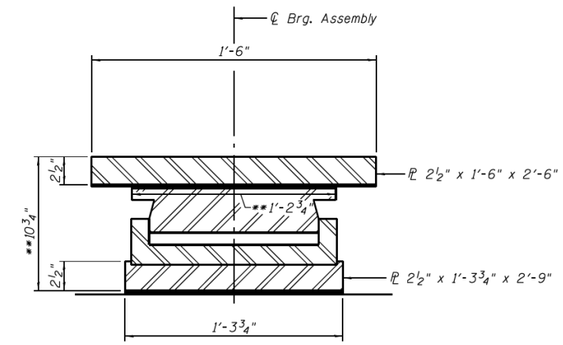

SECTION B-B

(Guide bar and existing pier cap PL omitted for clarity)

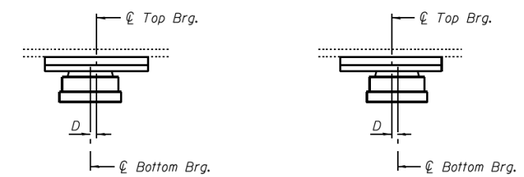

BELOW 50° F.
(Move bottom brg. away from adjacent column)

ABOVE 50° F.
(Move bottom brg. toward adjacent column)

SETTING ANCHOR BOLTS AT EXP. BRG.

D=⅛" per each 100' of expansion for every 15° temp. change from the normal temp. of 50° F.

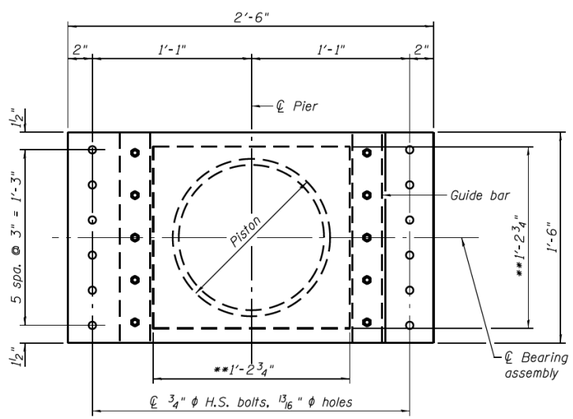

TOP BEARING PL AND PISTON PLAN

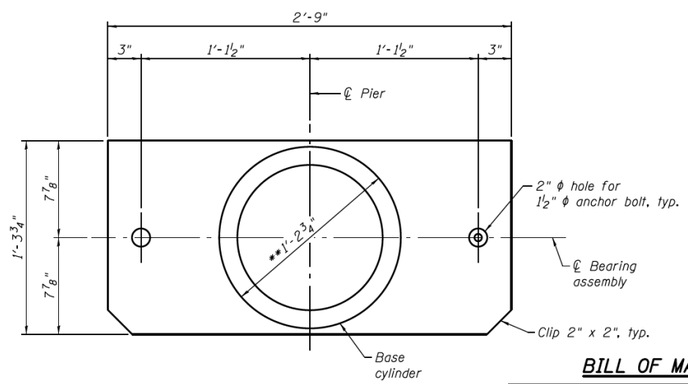

BOTTOM BEARING PL AND BASE CYLINDER PLAN

NESTED BEARING

(AT PIERS C2, C3, C5, C6, C7, C8, C10, C11, C13 & C14)

(20 Required)

BILL OF MATERIAL

Item	Unit	Total
High Load Multi-Rotational Bearings, Guided Expansion, 450k	Each	20
Anchor Bolts, 1½"	Each	40

DESIGN DATA

Bearing Manufacturer Design Criteria	Exist. Piers
Vertical Design Load (kips)	443.3
Horizontal Design Load (kips), H_u	88.7
Design Rotation (rad), θ_u	0.02
Total Required Movement (in.)	1"

* As alternates to the bolted connection shown, the guide bars may be connected to the top bearing plate by groove welds or the guide bars and top bearing plate may be fabricated as a single piece.

** Dimensions may vary depending on Manufacturer's design.

*** Field drilling and tapping into exist. top plate to take place prior to casting concrete for center column.

Notes:

Anchor bolts shall be ASTM F1554 all-thread (or an Engineer-approved alternate material) of the grade(s) and diameter(s) specified. The corresponding specified grade of AASHTO M314 anchor bolts may be used in lieu of ASTM F1554.

Anchor bolts shall be cast in place and installed according to Article 521.06 of the Standard Specifications.

For anchor bolt locations, see sheet S2-108.

The structural steel plates of the Bearing Assembly shall conform to the requirements of AASHTO M 270, Grade 50.

Two ⅛" adjusting shims shall be provided for each bearing in addition to all other plates or shims and placed as shown on bearing details.

Bearing dimensions and details shown are for a pot type HLMR bearing. Disc type HLMR bearing dimensions and details will vary.

PARSONS BRINCKERHOFF	USER NAME = poteld	DESIGNED - IJL	REVISED -
		CHECKED - PJL	REVISED -
	PLOT SCALE = N.T.S.	DRAWN - DCP	REVISED -
	PLOT DATE = 3/23/2016	CHECKED - JIG	REVISED -

STATE OF ILLINOIS
DEPARTMENT OF TRANSPORTATION

COLUMN BEARING DETAILS I
STRUCTURE NO. 016-0461

SHEET NO. S2-104 OF S2-145 SHEETS

F.A.I. RTE.	SECTION	COUNTY	TOTAL SHEETS	SHEET NO.
90/94/290	2014-004 R&B (WB)	COOK	706	381
		CONTRACT NO. 60X78		
		ILLINOIS FED. AID PROJECT		

0160461-60X78-S104-BRG.dgn

HBM ENGINEERING GROUP, LLC	USER NAME = ahmad.issa	DESIGNED -	REVISED -
		CHECKED -	REVISED -
	PLOT SCALE = N.T.S	DRAWN -	REVISED -
	PLOT DATE = 7/26/2018	CHECKED - MI, MAI	REVISED -

STATE OF ILLINOIS
DEPARTMENT OF TRANSPORTATION

EXISTING RECORD DRAWINGS

F.A.I. RTE.	SECTION	COUNTY	TOTAL SHEETS	SHEET NO.
90/94/290	2014-013R&B-R	COOK	1972	1746
		CONTRACT NO. 60X93		
		ILLINOIS FED. AID PROJECT		

FILE NAME: pw:\\617479-PWINT.aecomonline.local:AECOM_DS02_NA\Documents\01 Americas\Transportation\60269938 Circle\Phase_II\000_CAD\008_Structural\Structure_016-1718\Existing Plans\33906-60X93-SXX-Existing169

2:23:10 PM

FOR INFORMATION ONLY

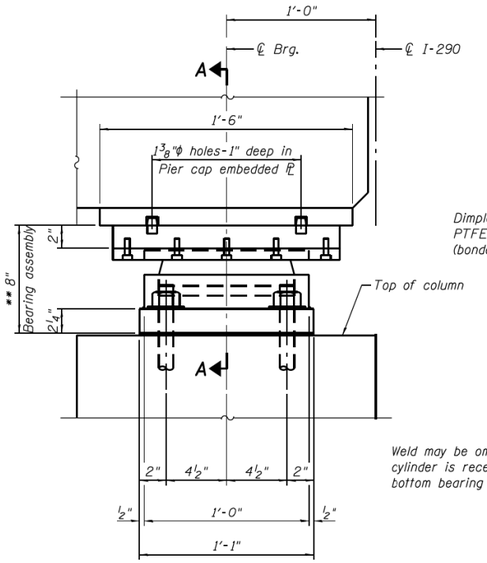

ELEVATION AT PIER
(Looking East)

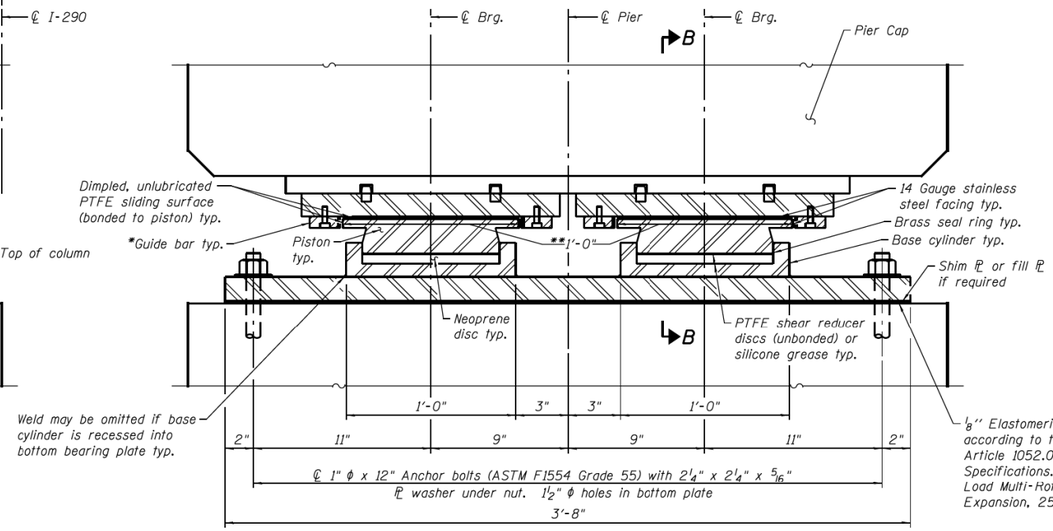

SECTION A-A

1/8'' Elastomeric neoprene leveling pad according to the material properties of Article 1052.02(a) of the Standard Specifications. Cost included in High Load Multi-Rotational Bearings, Guided Expansion, 250k.

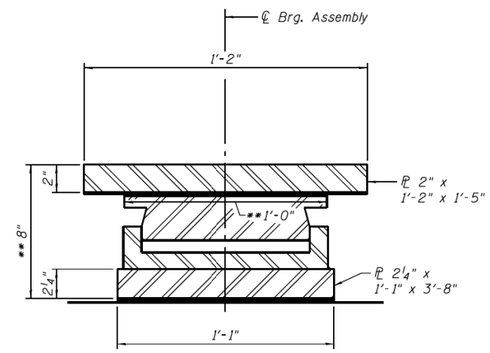

SECTION B-B
(Guide bar, pintles and pier cap embedded plate omitted for clarity)

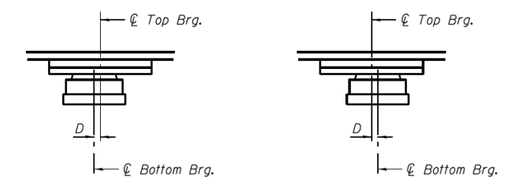

BELOW 50° F.
(Move bottom brg. away from adjacent column)

ABOVE 50° F.
(Move bottom brg. toward adjacent column)

SETTING ANCHOR BOLTS AT EXP. BRG.

D=1/8'' per each 100' of expansion for every 15° temp. change from the normal temp. of 50° F.

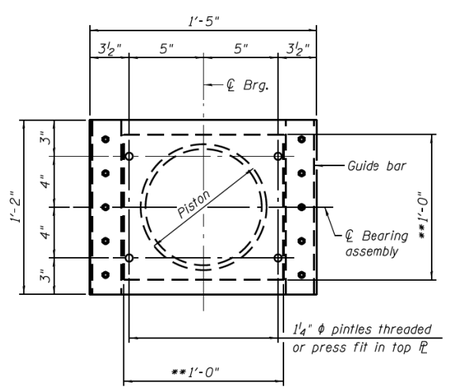

TOP BEARING ℙ
AND PISTON PLAN

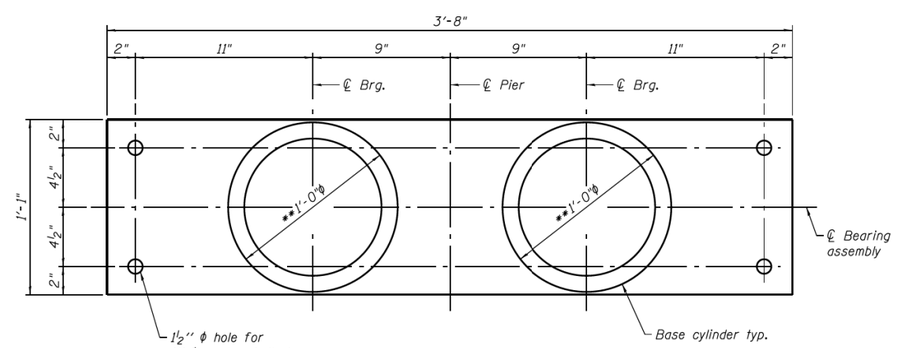

BOTTOM BEARING ℙ
AND BASE CYLINDER PLAN

* As alternates to the bolted connection shown, the guide bars may be connected to the top bearing plate by groove welds or the guide bars and top bearing plate may be fabricated as a single piece. If bolted connection is used, maintain a minimum clearance of 3'' from the centerline of the pintles to the bolts in the guide bar.

** Dimensions may vary depending on Manufacturer's design.

NESTED BEARING (AT PIER C1, C4, C9 & C12)
(8 Required, 2 HLMR Bearings per Assembly)

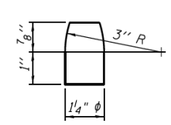

PINTLE

DESIGN DATA

Bearing Manufacturer Design Criteria	Prop. Piers
Vertical Design Load (kips)	237.5
Horizontal Design Load (kips), H_u	47.5
Design Rotation (rad), θ_u	0.02
Total Required Movement (in.)	1/2"

BILL OF MATERIAL

Item	Unit	Total
High Load Multi-Rotational Bearings, Guided Expansion, 250k	Each	8
Anchor Bolts, 1''	Each	16

Notes:

Anchor bolts shall be ASTM F1554 all-thread (or an Engineer-approved alternate material) of the grade(s) and diameter(s) specified. The corresponding specified grade of AASHTO M314 anchor bolts may be used in lieu of ASTM F1554.

Drilled and set anchor bolts shall be installed according to Article 521.06 of the Standard Specifications.

For anchor bolt locations, see sheets S2-107, S2-110, S2-113 & S2-116.

The structural steel plates of the Bearing Assembly shall conform to the requirements of AASHTO M 270, Grade 50.

Two 1/8'' adjusting shims shall be provided for each bearing in addition to all other plates or shims and placed as shown on bearing details.

Bearing dimensions and details shown are for a pot type HLMR bearing. Disc type HLMR bearing dimensions and details will vary.

0160461-60X78-S105-BRG.dgn

PARSONS BRINCKERHOFF	USER NAME = poteld	DESIGNED - JJL	REVISED -	STATE OF ILLINOIS DEPARTMENT OF TRANSPORTATION	COLUMN BEARING DETAILS II STRUCTURE NO. 016-0461	F.A.I. RTE.	SECTION	COUNTY	TOTAL SHEETS	SHEET NO.
		CHECKED - PJL	REVISED -			90/94/290	2014-004 R&B (WB)	COOK	706	382
	PLOT SCALE = N.T.S.	DRAWN - DCP	REVISED -					CONTRACT NO. 60X78		
	PLOT DATE = 3/23/2016	CHECKED - JIG	REVISED -		SHEET NO. S2-105 OF S2-145 SHEETS		ILLINOIS FED. AID PROJECT			

HBM ENGINEERING GROUP, LLC	USER NAME = ahmad.issa	DESIGNED -	REVISED -	STATE OF ILLINOIS DEPARTMENT OF TRANSPORTATION	EXISTING RECORD DRAWINGS	F.A.I. RTE.	SECTION	COUNTY	TOTAL SHEETS	SHEET NO.
		CHECKED -	REVISED -			90/94/290	2014-013R&B-R	COOK	1972	1747
	PLOT SCALE = N.T.S	DRAWN -	REVISED -					CONTRACT NO. 60X93		
	PLOT DATE = 7/26/2018	CHECKED - MI, MAI	REVISED -				ILLINOIS	FED. AID PROJECT		

FILE NAME: pw:\\617479-PWINT.aecomonline.local:AECOM_DS02_NA\Documents\01 Americas\Transportation\60269938 Circle\Phase_II\000_CAD\008_Structural\Structure_016-1718\Existing Plans\33906-60X93-SXX-Existing170

2:23:18 PM

FOR INFORMATION ONLY

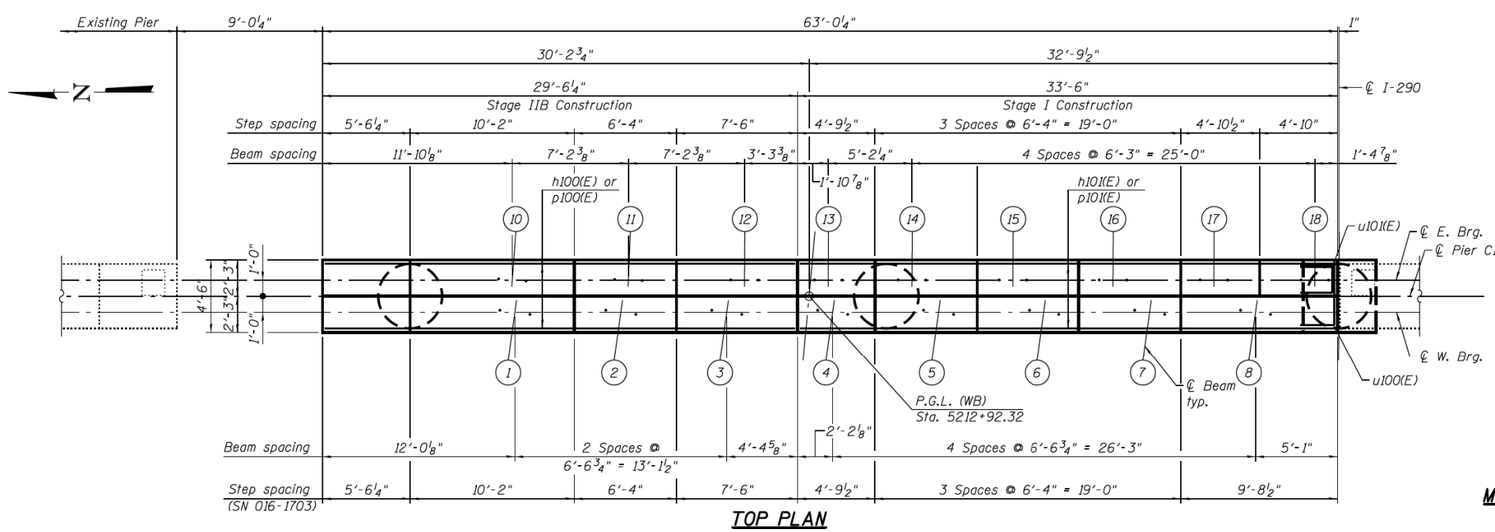

TOP PLAN

BEARING SEAT STEP HEIGHTS

E. Seat Step	"A"
Lt. to 10	1'-6¾"
10 to 11	3⅞"
11 to 12	4"
12 to 13	2¾"
13 to 14	2⅞"
14 to 15	3⅜"
15 to 16	3⅜"
16 to 17	3⅜"
17 to 18	3⅜"
W. Seat Step	**"B"**
Lt. to 1	10½"
1 to 2	3⅝"
2 to 3	3½"
3 to 4	3⅝"
4 to 5	3½"
5 to 6	3⅝"
6 to 7	3½"
7 to 8	3⅝"

TOP OF SEAT ELEVATION

Beam No.	E. Seat Elevation	Beam No.	W. Seat Elevation
10	604.50	1	603.38
11	604.82	2	603.68
12	605.15	3	603.97
13	605.38	4	604.27
14	605.62	5	604.56
15	605.90	6	604.86
16	606.18	7	605.15
17	606.46	8	605.45
18	606.74		

Notes:
1. Space reinforcement in cap to miss anchor bolts.
2. Pour steps monolithically with cap.
3. For Sections A-A, B-B & C-C, and Details A & B, see sheet S2-107.
4. sp100(E), sp101(E) & sp102(E) spiral.
   1) Provide 1½ extra turns, shop welded together per AWS D1.4 top and bottom. Extend spiral 2" into pier cap or column cap. Provide 4-#4 spacers or equivalent.
   2) When splicing spiral reinforcement is necessary, the spiral shall be provided with 1½ extra turns at the ends to be spliced. These additional turns shall either be welded together according to AWS D1.4 or shall both terminate with a 135° standard hook.

MINIMUM BAR LAP

#5 bar = 3'-3"
#10 bar = 10'-10"

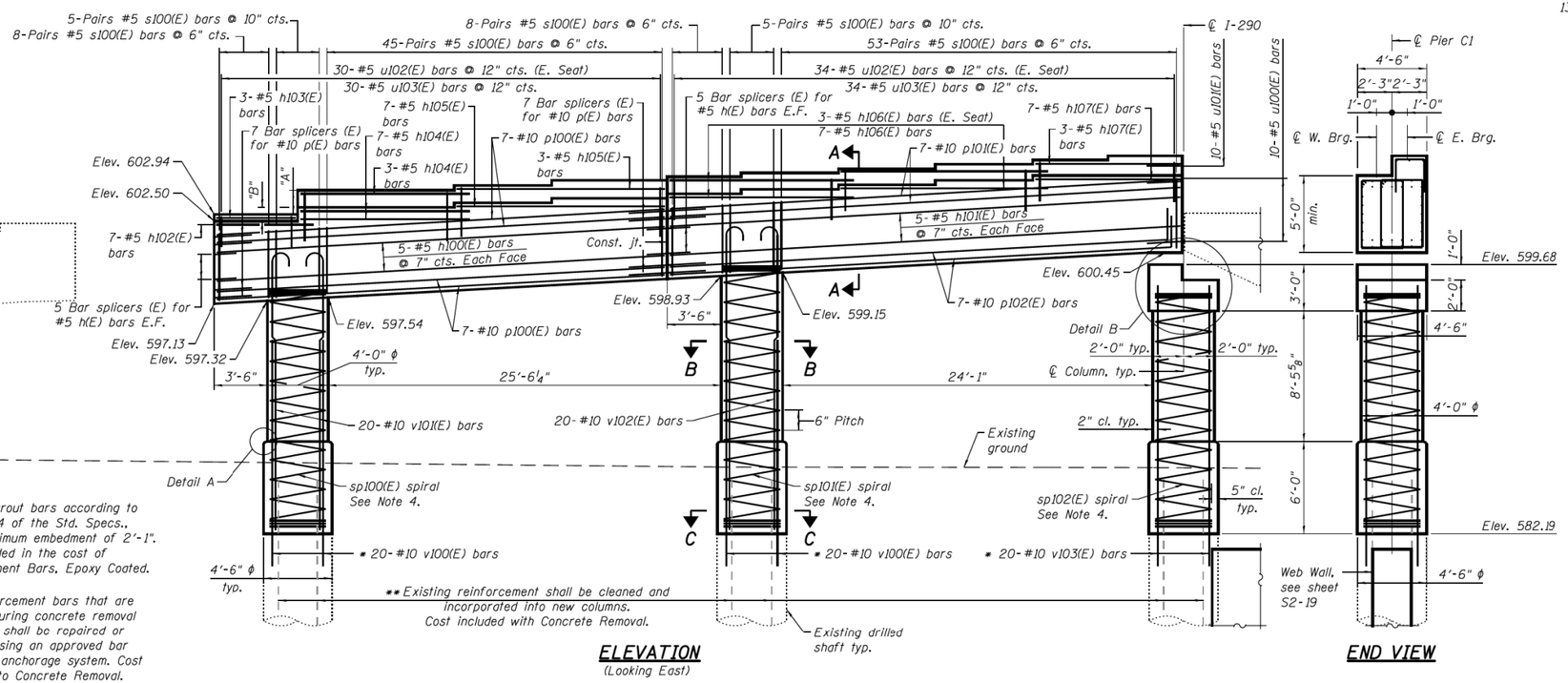

ELEVATION
(Looking East)

END VIEW

ANCHOR BOLT LAYOUT

PARSONS BRINCKERHOFF	USER NAME = poteld	DESIGNED - JLP/IJL	REVISED -	STATE OF ILLINOIS DEPARTMENT OF TRANSPORTATION	PIER C1 STRUCTURE NO. 016-0461	F.A.I. RTE.	SECTION	COUNTY	TOTAL SHEETS	SHEET NO.
		CHECKED - PJL	REVISED -			90/94/290	2014-004 R&B (WB)	COOK	706	383
	PLOT SCALE = N.T.S.	DRAWN - DCP	REVISED -					CONTRACT NO. 60X78		
	PLOT DATE = 3/23/2016	CHECKED - JIG	REVISED -		SHEET NO. S2-106 OF S2-145 SHEETS			ILLINOIS FED. AID PROJECT		

0160461-60X78-S106-PC1.dgn

HBM ENGINEERING GROUP, LLC	USER NAME = ahmad.issa	DESIGNED -	REVISED -	STATE OF ILLINOIS DEPARTMENT OF TRANSPORTATION	EXISTING RECORD DRAWINGS	F.A.I. RTE.	SECTION	COUNTY	TOTAL SHEETS	SHEET NO.
		CHECKED -	REVISED -			90/94/290	2014-013R&B-R	COOK	1972	1748
	PLOT SCALE = N.T.S	DRAWN -	REVISED -					CONTRACT NO. 60X93		
	PLOT DATE = 7/26/2018	CHECKED - MI, MAI	REVISED -					ILLINOIS FED. AID PROJECT		

FILE NAME: pw:\\617479-PWINT.aecomonline.local:AECOM_DS02_NA\Documents\01 Americas\Transportation\60269938 Circle\Phase_II\000_CAD\008_Structural\Structure_016-1718\Existing Plans\33906-60X93-SXX-Existing171

2:23:27 PM

FOR INFORMATION ONLY

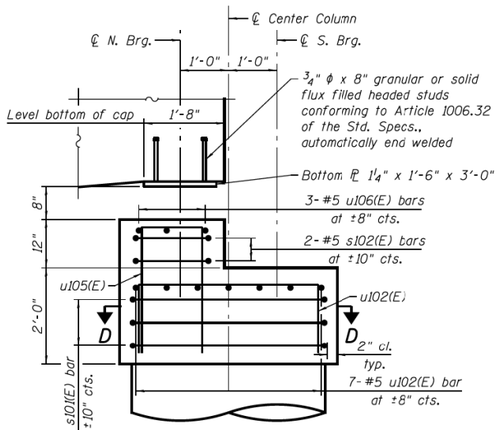

DETAIL B

Pier cap and column reinforcement not shown for clarity

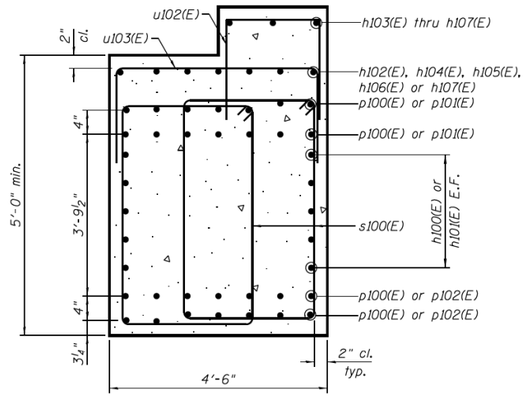

SECTION A-A

Middle of Pier Cap

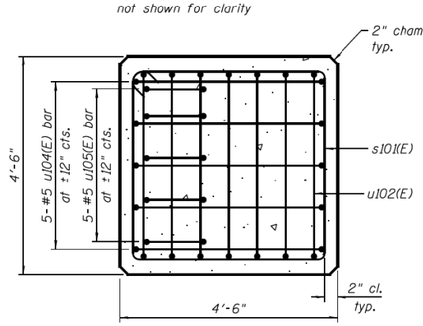

SECTION D-D

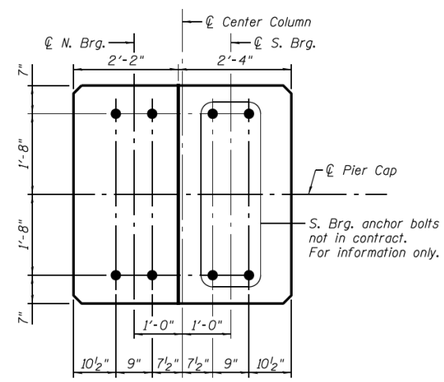

ANCHOR BOLT LAYOUT AT NESTED BEARING

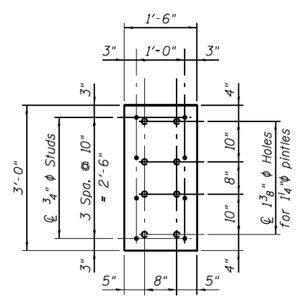

BOTTOM PLATE

Cost included with Concrete Structures.

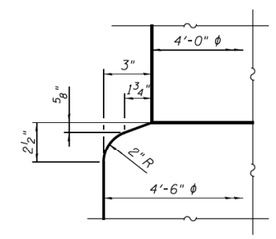

DETAIL A

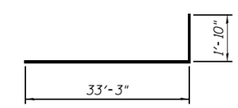

BAR p102(E)

BILL OF MATERIAL

Bar	No.	Size	Length	Shape
h100(E)	10	#5	29'-3"	
h101(E)	10	#5	33'-3"	
h102(E)	7	#5	6'-4"	
h103(E)	3	#5	5'-4"	
h104(E)	17	#5	11'-0"	
h105(E)	10	#5	13'-6"	
h106(E)	20	#5	13'-10"	
h107(E)	10	#5	11'-3"	
p100(E)	28	#10	29'-3"	
p101(E)	14	#10	33'-3"	
p102(E)	14	#10	35'-1"	
s100(E)	248	#5	15'-9"	
s101(E)	3	#5	17'-7"	
s102(E)	2	#5	12'-11"	
* * * sp100(E)	1	#5	15'-5"	
sp101(E)	1	#5	17'-0"	
sp102(E)	1	#5	16'-1"	
u100(E)	10	#5	11'-2"	
u101(E)	1	#5	8'-11"	
u102(E)	64	#5	7'-5"	
u103(E)	64	#5	8'-6"	
u104(E)	12	#5	7'-6"	
u105(E)	5	#5	7'-2"	
u106(E)	3	#5	9'-6"	
v100(E)	40	#10	13'-3"	
v101(E)	20	#10	18'-4"	
v102(E)	20	#10	19'-11"	
v103(E)	20	#10	18'-4"	
Structure Excavation			Cu. Yd.	28
Concrete Structures			Cu. Yd.	88.6
Reinforcement Bars, Epoxy Coated			Pound	23,030
Concrete Sealer			Sq. Ft.	2,033

* Length is height of spiral

Notes:
1. Reinforcement bars designated (E) shall be epoxy coated.
2. Space reinforcement in column cap to miss anchor bolts.
3. Bars equally spaced, unless otherwise noted.
4. Apply concrete sealer to all exposed concrete surfaces of the pier.
5. All edges shall have standard 3/4" chamfer, unless otherwise noted.
6. Spirals are measured vertically.

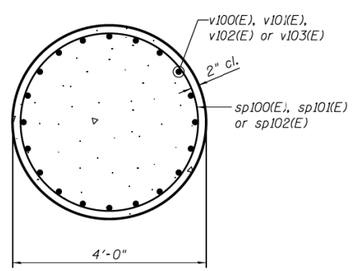

SECTION B-B

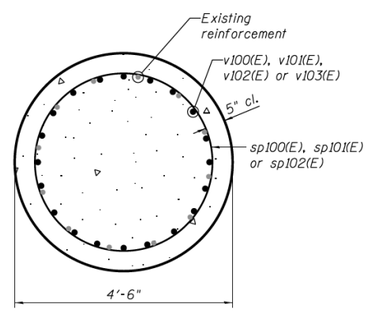

SECTION C-C

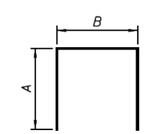

BARS

A & B DIMENSIONS

Bar	A	B
u100(E)	3'-6"	4'-2"
u101(E)	3'-6"	4'-2"
u102(E)	2'-9"	1'-11"
u103(E)	2'-2"	4'-2"
u104(E)	1'-8"	4'-2"
u105(E)	2'-8"	1'-10"
u106(E)	2'-8"	4'-2"

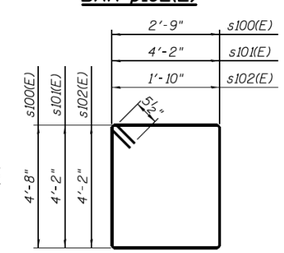

BARS s100(E) THRU s102(E)

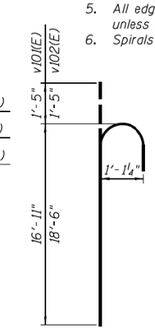

BARS v101(E) & v102(E)

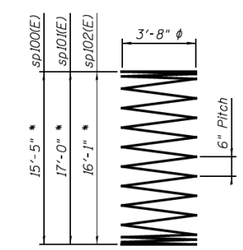

BARS sp100(E) THRU sp102(E)

PARSONS BRINCKERHOFF	USER NAME = poteld	DESIGNED - JLP/IJL	REVISED -	STATE OF ILLINOIS DEPARTMENT OF TRANSPORTATION	PIER C1 DETAILS STRUCTURE NO. 016-0461	F.A.I. RTE.	SECTION	COUNTY	TOTAL SHEETS	SHEET NO.
		CHECKED - PJL	REVISED -			90/94/290	2014-004 R&B (WB)	COOK	706	384
	PLOT SCALE = N.T.S.	DRAWN - DCP	REVISED -					CONTRACT NO. 60X78		
	PLOT DATE = 3/23/2016	CHECKED - JIG	REVISED -		SHEET NO. S2-107 OF S2-145 SHEETS		ILLINOIS	FED. AID PROJECT		

HBM ENGINEERING GROUP, LLC	USER NAME = ahmad.issa	DESIGNED -	REVISED -	STATE OF ILLINOIS DEPARTMENT OF TRANSPORTATION	EXISTING RECORD DRAWINGS	F.A.I. RTE.	SECTION	COUNTY	TOTAL SHEETS	SHEET NO.
		CHECKED -	REVISED -			90/94/290	2014-013R&B-R	COOK	1972	1749
	PLOT SCALE = N.T.S	DRAWN -	REVISED -					CONTRACT NO. 60X93		
	PLOT DATE = 7/26/2018	CHECKED - MI, MAI	REVISED -				ILLINOIS	FED. AID PROJECT		

FILE NAME: pw:\\617479-PWINT.aecomonline.local:AECOM_DS02_NA\Documents\01 Americas\Transportation\60269938 Circle\Phase_II\000_CAD\008_Structural\Structure_016-1718\Existing Plans\33906-60X93-SXX-Existing172

0160461-60X78-S107-PC1.dgn

2:23:36 PM

FOR INFORMATION ONLY

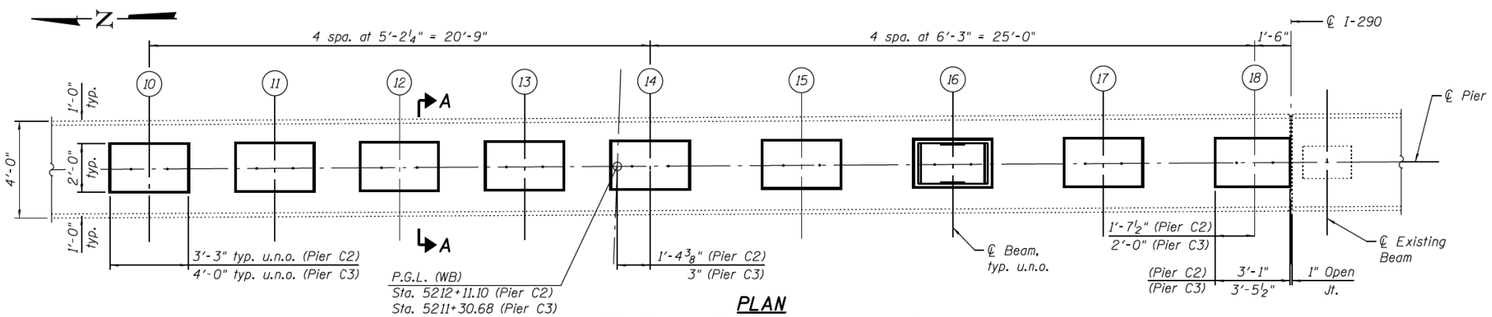

PLAN

(Pier C2 shown, Pier C3 similar except as noted)

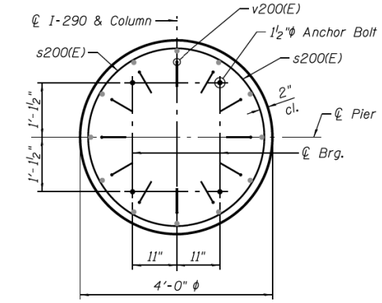

PLAN - CENTER COLUMN (AT PIERS C2, C3, C5, C6, C7, C8, C10, C11, C13 & C14)

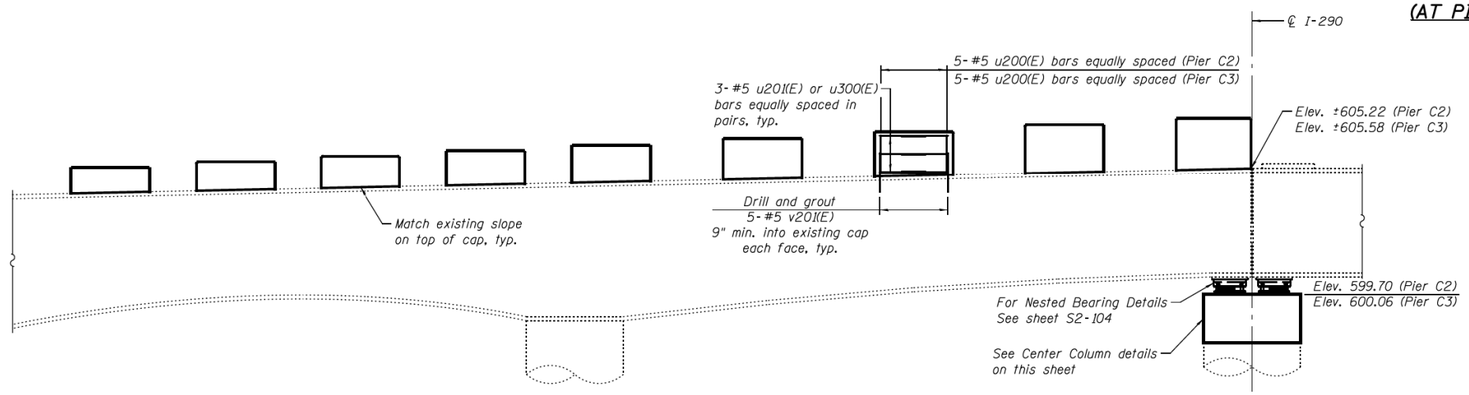

ELEVATION

(Looking East, Pier C2 shown, Pier C3 similar except as noted)

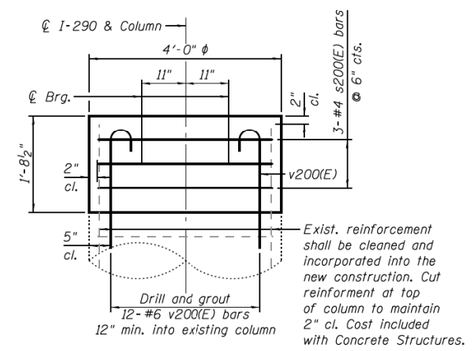

ELEVATION - CENTER COLUMN (AT PIERS C2, C3, C5, C6, C7, C8, C10, C11, C13 & C14)

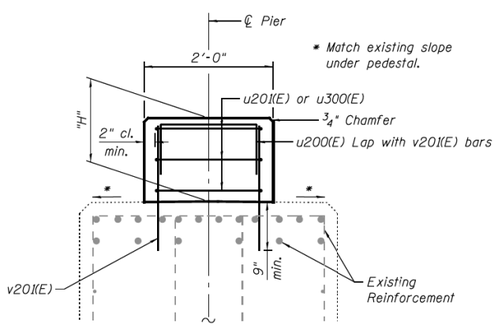

SECTION A-A

(Anchor bolts not shown for clarity)

BEAM SEAT ELEVATION

Beam	Pier C2	Pier C3
10	605.23	606.31
11	605.46	606.43
12	605.69	606.55
13	605.92	606.67
14	606.15	606.79
15	606.43	606.94
16	606.71	607.09
17	606.99	607.23
18	607.26	607.38

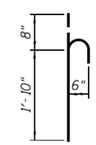

BAR v200(E)

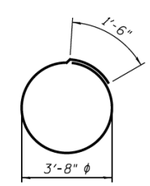

BAR s200(E)

BILL OF MATERIAL

Bar	No.	Size	Length	Shape
s200(E)	30	#4	13'-0"	
u200(E)	90	#5	4'-8"	
u201(E)	54	#5	6'-8"	
u300(E)	54	#5	7'-4"	
v200(E)	120	#6	2'-6"	
*** v201(E)	180	#5	2'-7"	
Reinforcement Bars, Epoxy Coated			Pound	2,300
Concrete Structures			Cu. Yd.	15.9

*** Cut bar in field to fit.

PEDESTAL HEIGHT, "H"

Beam	Pier C2	Pier C3
10	1'-0¼"	1'-8"
11	1'-1¾"	1'-8¼"
12	1'-3⅛"	1'-8½"
13	1'-4½"	1'-8⅝"
14	1'-6"	1'-8⅞"
15	1'-7¾"	1'-9⅛"
16	1'-9½"	1'-9½"
17	1'-11¼"	1'-9⅝"
18	2'-0⅞"	1'-9⅞"

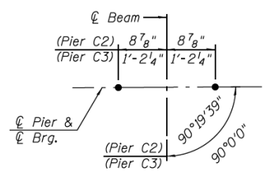

ANCHOR BOLT LAYOUT

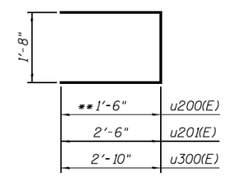

BARS u200(E), u201(E) & u300(E)

**Cut in field to fit

Notes:

1. Beam seat elevations and pedestal heights, "H", were determined based on data from existing plans. Prior to ordering any material, the Contractor shall verify in the field all beam seat heights and shim thickness dimensions. Space reinforcement in concrete pedestals to miss anchor bolts.

2. Drilling and grouting of bars into existing pier cap and column shall be done in accordance with Article 584 of the Standard Specifications. Drilled and grouted bars shall maintain 5" clearance from an existing face of concrete and shall be installed such that they miss existing pier cap reinforcement. Cost included with Reinforcement Bars, Epoxy Coated.

PARSONS BRINCKERHOFF	USER NAME = poteld	DESIGNED - JLP/IJL	REVISED -	STATE OF ILLINOIS DEPARTMENT OF TRANSPORTATION	PIER C2 & C3 DETAILS STRUCTURE NO. 016-0461	F.A.I. RTE.	SECTION	COUNTY	TOTAL SHEETS	SHEET NO.
		CHECKED - JZ	REVISED -			90/94/290	2014-004 R&B (WB)	COOK	706	385
	PLOT SCALE = N.T.S.	DRAWN - IJL	REVISED -					CONTRACT NO. 60X78		
	PLOT DATE = 3/23/2016	CHECKED - JIG	REVISED -		SHEET NO. S2-108 OF S2-145 SHEETS		ILLINOIS	FED. AID PROJECT		

0160461-60X78-S108-PC.dgn

HBM ENGINEERING GROUP, LLC	USER NAME = ahmad.issa	DESIGNED -	REVISED -	STATE OF ILLINOIS DEPARTMENT OF TRANSPORTATION	EXISTING RECORD DRAWINGS	F.A.I. RTE.	SECTION	COUNTY	TOTAL SHEETS	SHEET NO.
		CHECKED -	REVISED -			90/94/290	2014-013R&B-R	COOK	1972	1750
	PLOT SCALE = N.T.S	DRAWN -	REVISED -					CONTRACT NO. 60X93		
	PLOT DATE = 7/26/2018	CHECKED - MI, MAI	REVISED -				ILLINOIS	FED. AID PROJECT		

FILE NAME: pw:\\617479-PWINT.aecomonline.local:AECOM_DS02_NA\Documents\01 Americas\Transportation\60269938 Circle\Phase_II\000_CAD\008_Structural\Structure_016-1718\Existing Plans\33906-60X93-SXX-Existing173

2:23:44 PM

FOR INFORMATION ONLY

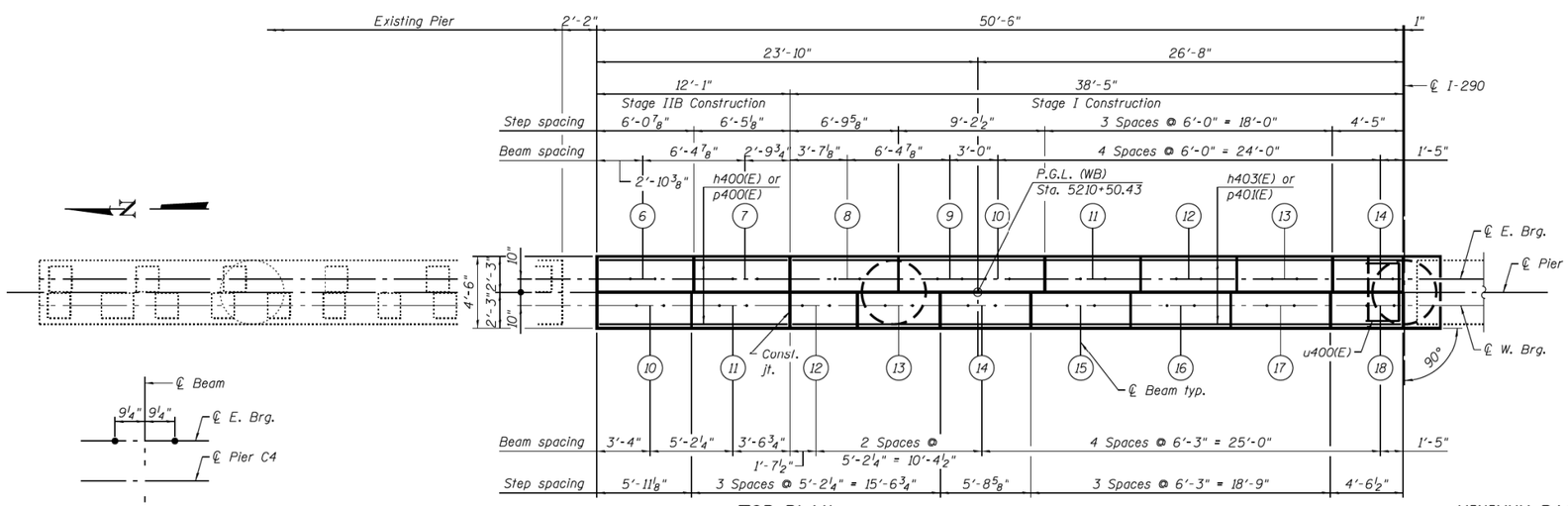

TOP PLAN

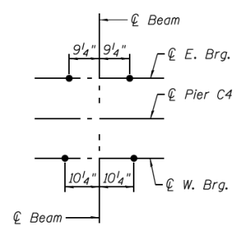

ANCHOR BOLT LAYOUT

MINIMUM BAR LAP

#5 bar = 3'-3"
#10 bar = 10'-10"

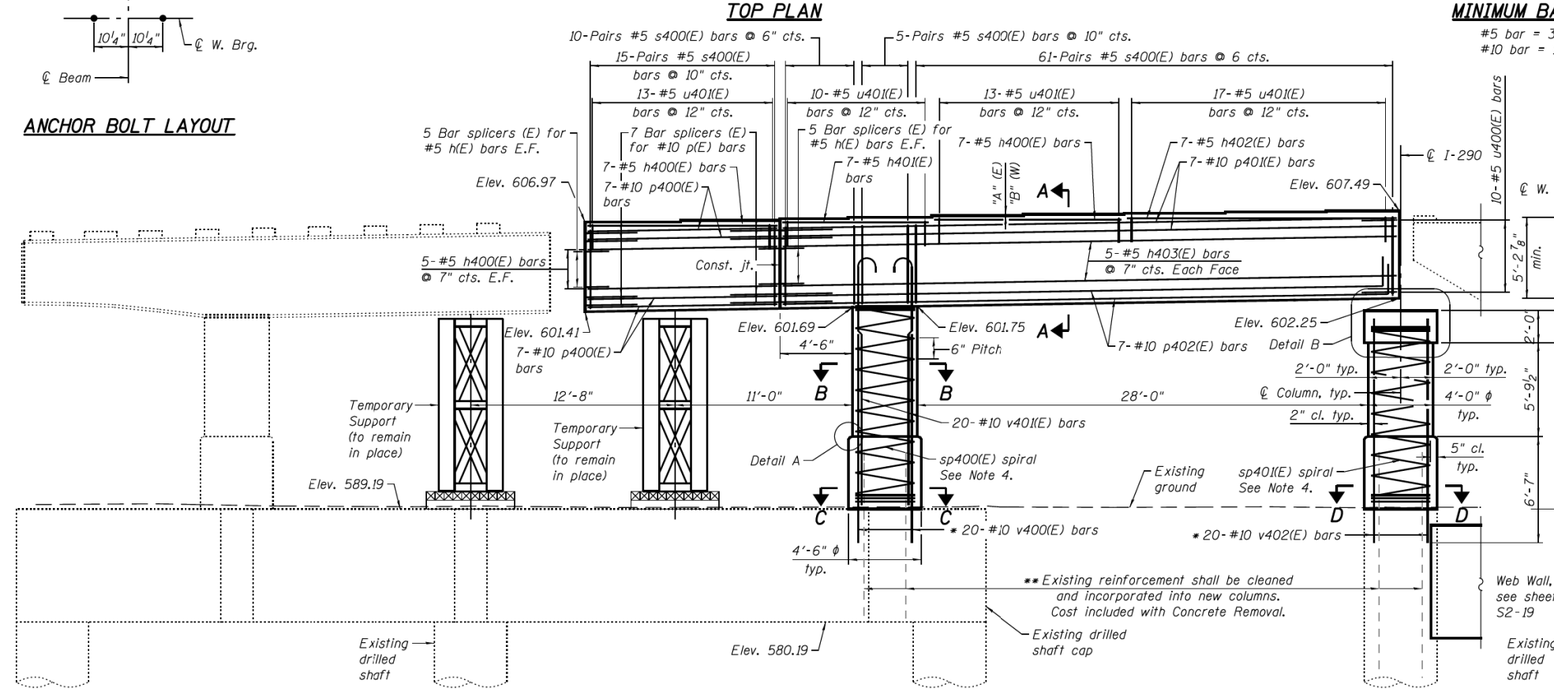

ELEVATION
(Looking East)

END VIEW

TOP OF SEAT ELEVATION

Beam No.	E. Seat Elevation	Beam No.	W. Seat Elevation
6	607.29	10	607.06
7	607.42	11	607.17
8	607.55	12	607.27
9	607.66	13	607.38
10	607.66	14	607.49
11	607.80	15	607.56
12	607.87	16	607.64
13	607.95	17	607.73
14	608.03	18	607.82

Notes:
1. Space reinforcement in cap to miss anchor bolts.
2. Pour steps monolithically with cap.
3. For Sections A-A, B-B, C-C & D-D and Details A & B, see sheet S2-110.
4. sp400(E) & sp401(E) spiral.
   1) Provide 1 1/2 extra turns, shop welded together per AWS D1.4 top and bottom. Extend spiral 2" into pier cap or column cap. Provide 4-#4 spacers or equivalent.
   2) When splicing spiral reinforcement is necessary, the spiral shall be provided with 1 1/2 extra turns at the ends to be spliced. These additional turns shall either be welded together according to AWS D1.4 or shall both terminate with a 135° standard hook.

BEARING SEAT STEP HEIGHTS

E. Seat Step	"A"
6 to 7	1 1/2"
7 to 8	1 1/2"
8 to 9/10	1 3/8"
9/10 to 11	1 5/8"
11 to 12	7/8"
12 to 13	1"
13 to 14	1"
W. Seat Step	**"B"**
10 to 11	1 1/4"
11 to 12	1 1/4"
12 to 13	1 1/4"
13 to 14	1 1/4"
14 to 15	7/8"
15 to 16	1"
16 to 17	1 1/8"
17 to 18	1 1/8"

* Drill and grout bars according to Article 584 of the Std. Specs., with a minimum embedment of 2'-1". Cost included in the cost of Reinforcement Bars, Epoxy Coated.

** Any reinforcement bars that are damaged during concrete removal operations shall be repaired or replaced using an approved bar splicer or anchorage system. Cost incidental to Concrete Removal.

PARSONS BRINCKERHOFF	USER NAME = poteld	DESIGNED - PJL	REVISED -	STATE OF ILLINOIS DEPARTMENT OF TRANSPORTATION	PIER C4 STRUCTURE NO. 016-0461	F.A.I. RTE.	SECTION	COUNTY	TOTAL SHEETS	SHEET NO.
		CHECKED - DS	REVISED -			90/94/290	2014-004 R&B (WB)	COOK	706	386
	PLOT SCALE = N.T.S.	DRAWN - DCP	REVISED -					CONTRACT NO. 60X78		
	PLOT DATE = 3/23/2016	CHECKED - JIG	REVISED -		SHEET NO. S2-109 OF S2-145 SHEETS			ILLINOIS FED. AID PROJECT		

HBM ENGINEERING GROUP, LLC	USER NAME = ahmad.issa	DESIGNED -	REVISED -	STATE OF ILLINOIS DEPARTMENT OF TRANSPORTATION	EXISTING RECORD DRAWINGS	F.A.I. RTE.	SECTION	COUNTY	TOTAL SHEETS	SHEET NO.
		CHECKED -	REVISED -			90/94/290	2014-013R&B-R	COOK	1972	1751
	PLOT SCALE = N.T.S	DRAWN -	REVISED -					CONTRACT NO. 60X93		
	PLOT DATE = 7/26/2018	CHECKED - MI, MAI	REVISED -					ILLINOIS FED. AID PROJECT		

0160461-60X78-S109-PC4.dgn

FILE NAME: pw:\\617479-PWINT.aecomonline.local:AECOM_DS02_NA\Documents\01 Americas\Transportation\60269938 Circle\Phase_II\000_CAD\008_StructuralStructure_016-1718\Existing Plans\33906-60X93-SXX-Existing174

2:23:53 PM

FOR INFORMATION ONLY

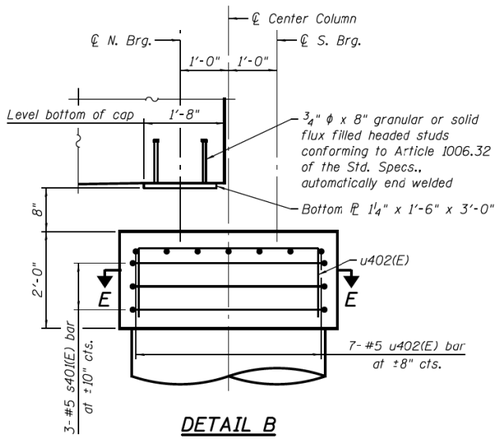

DETAIL B

Pier cap and column reinforcement not shown for clarity

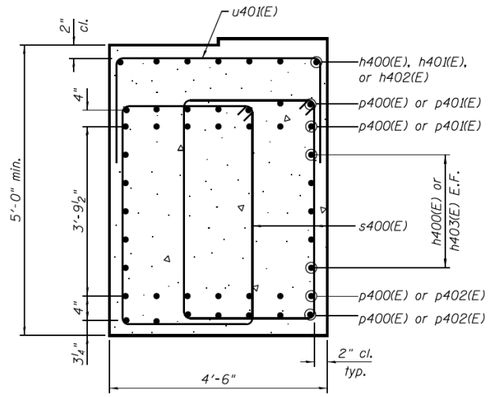

SECTION A-A

Middle of Pier Cap

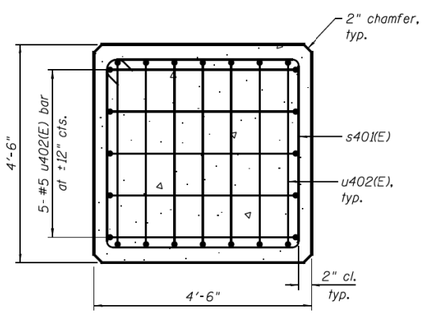

SECTION E-E

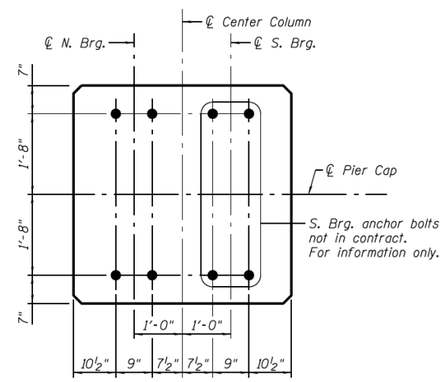

ANCHOR BOLT LAYOUT AT NESTED BEARING

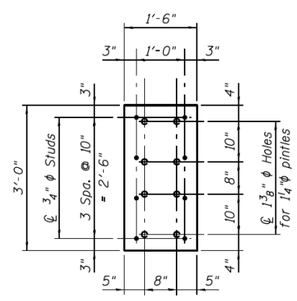

BOTTOM PLATE

Cost included with Concrete Structures.

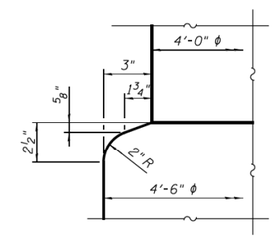

DETAIL A

BILL OF MATERIAL

Bar	No.	Size	Length	Shape
h400(E)	24	#5	11'-10"	
h401(E)	7	#5	9'-0"	
h402(E)	7	#5	16'-0"	
h403(E)	10	#5	38'-2"	
p400(E)	28	#10	11'-10"	
p401(E)	14	#10	38'-2"	
p402(E)	14	#10	40'-0"	
s400(E)	182	#5	15'-9"	
s401(E)	3	#5	17'-7"	
* sp400(E)	1	#5	12'-9"	
* sp401(E)	1	#5	11'-9"	
u400(E)	10	#5	11'-2"	
u401(E)	53	#5	8'-6"	
u402(E)	12	#5	7'-6"	
v400(E)	20	#10	13'-3"	
v401(E)	20	#10	16'-0"	
v402(E)	20	#10	14'-1"	
Concrete Structures			Cu. Yd.	59.1
Reinforcement Bars, Epoxy Coated			Pound	15,130
Concrete Sealer			Sq. Ft.	1,406

* Length is height of spiral

Note:
1. Reinforcement bars designated (E) shall be epoxy coated.
2. Space reinforcement in column cap to miss anchor bolts.
3. Bars equally spaced, unless otherwise noted.
4. Apply concrete sealer to all exposed concrete surfaces of the pier.
5. All edges shall have standard 3/4" chamfer, unless otherwise noted.
6. Spirals are measured vertically.

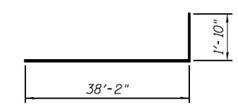

BAR p402(E)

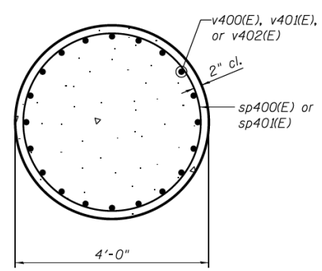

SECTION B-B

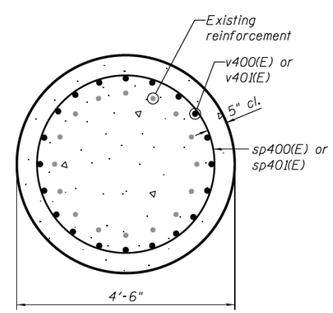

SECTION C-C

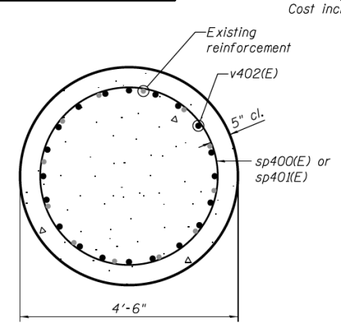

SECTION D-D

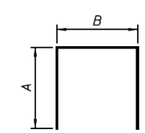

BARS

A & B DIMENSIONS

Bar	A	B
u400(E)	3'-6"	4'-2"
u401(E)	2'-2"	4'-2"
u402(E)	1'-8"	4'-2"

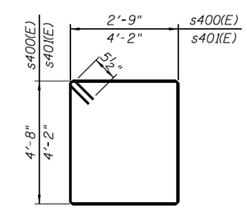

BARS s400(E) & s401(E)

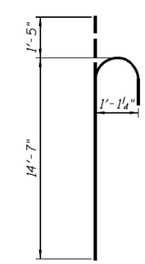

BAR v401(E)

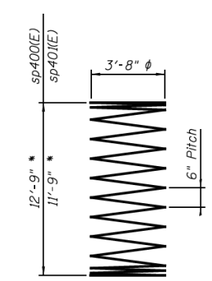

BARS sp400(E) & sp401(E)

PARSONS BRINCKERHOFF	USER NAME = poteld	DESIGNED - PJL	REVISED -	STATE OF ILLINOIS DEPARTMENT OF TRANSPORTATION	PIER C4 DETAILS STRUCTURE NO. 016-0461	F.A.I. RTE.	SECTION	COUNTY	TOTAL SHEETS	SHEET NO.
		CHECKED - DS	REVISED -			90/94/290	2014-004 R&B (WB)	COOK	706	387
	PLOT SCALE = N.T.S.	DRAWN - DCP	REVISED -					CONTRACT NO. 60X78		
	PLOT DATE = 3/23/2016	CHECKED - JIG	REVISED -		SHEET NO. S2-110 OF S2-145 SHEETS			ILLINOIS FED. AID PROJECT		

0160461-60X78-S110-PC4.dgn

HBM ENGINEERING GROUP, LLC	USER NAME = ahmad.issa	DESIGNED -	REVISED -	STATE OF ILLINOIS DEPARTMENT OF TRANSPORTATION	EXISTING RECORD DRAWINGS	F.A.I. RTE.	SECTION	COUNTY	TOTAL SHEETS	SHEET NO.
		CHECKED -	REVISED -			90/94/290	2014-013R&B-R	COOK	1972	1752
	PLOT SCALE = N.T.S	DRAWN -	REVISED -					CONTRACT NO. 60X93		
	PLOT DATE = 7/26/2018	CHECKED - MI, MAI	REVISED -					ILLINOIS FED. AID PROJECT		

FILE NAME: pw:\\617479-PWINT.aecomonline.local:AECOM_DS02_NA\Documents\01 Americas\Transportation\60269938 Circle\Phase_II\000_CAD\008_Structural\Structure_016-1718\Existing Plans\33906-60X93-SXX-Existing175

2:24:01 PM

FOR INFORMATION ONLY

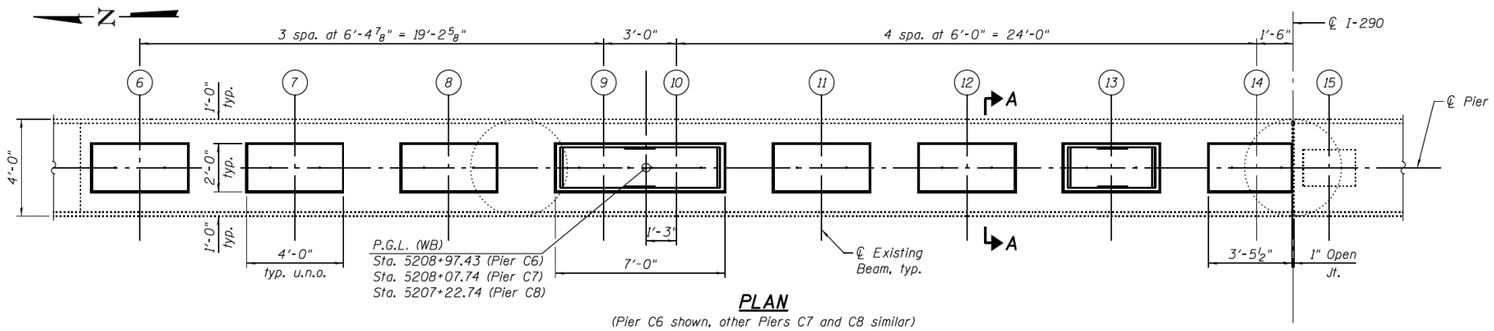

PLAN

(Pier C6 shown, other Piers C7 and C8 similar)

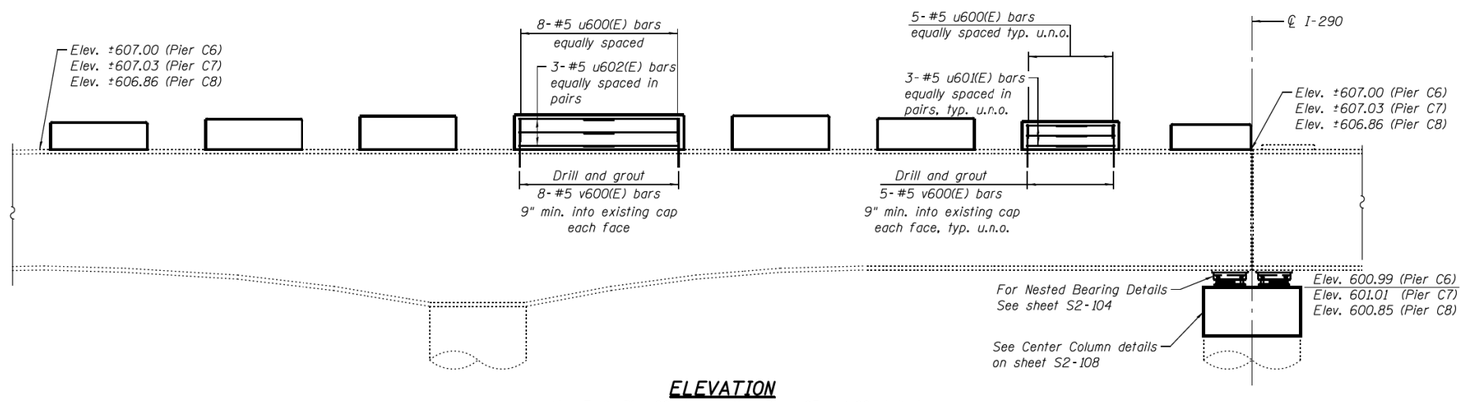

ELEVATION

(Looking East, Pier C6 shown, other Piers C7 and C8 similar)

PEDESTAL HEIGHT, "H"

Beam	Pier C6	Pier C7	Pier C8
6	1'-1 3/8"	11 3/4"	10 1/8"
7	1'-3"	1'-1 3/8"	11 5/8"
8	1'-4 1/2"	1'-2 1/8"	1'-1 1/8"
9	1'-5 1/8"	1'-3 1/2"	1'-1 1/8"
10	1'-5 1/8"	1'-3 1/2"	1'-1 1/8"
11	1'-4 3/4"	1'-3 1/8"	1'-1 3/8"
12	1'-3 3/8"	1'-1 3/4"	1'-0"
13	1'-1 1/8"	1'-0 1/4"	10 1/2"
14	1'-0 3/8"	10 3/4"	9"

BEAM SEAT ELEVATION

Beam	Pier C6	Pier C7	Pier C8
6	608.12	608.01	607.70
7	608.25	608.15	607.83
8	608.37	608.27	607.95
9	608.43	608.33	608.01
10	608.43	608.33	608.01
11	608.39	608.29	607.97
12	608.28	608.18	607.86
13	608.15	608.05	607.74
14	608.03	607.93	607.61

BILL OF MATERIAL

	Bar	No.	Size	Length	Shape
	u600(E)	129	#5	3'-4"	
	u601(E)	126	#5	7'-4"	
	u602(E)	18	#5	10'-4"	
***	v600(E)	258	#5	2'-0"	
	Reinforcement Bars, Epoxy Coated			Pound	2,150
	Concrete Structures			Cu. Yd.	8.9

*** Cut bar in field to fit.

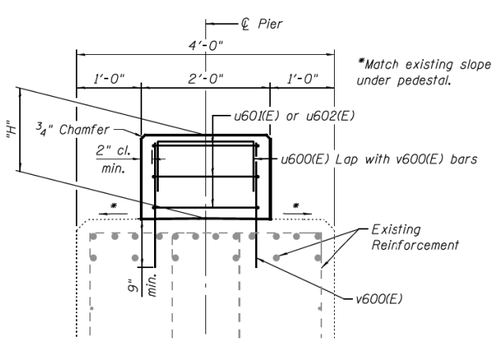

SECTION A-A

(Anchor bolts not shown for clarity)

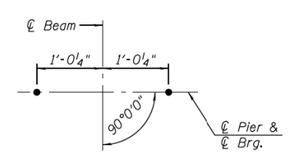

ANCHOR BOLT LAYOUT

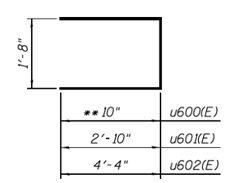

BARS u600(E) TO u603(E)

**Cut bar in field to fit.

Notes:

1. Beam seat elevations and pedestal heights, "H", were determined based on data from existing plans. Prior to ordering any material, the Contractor shall verify in the field all beam seat heights and shim thickness dimensions. Space reinforcement in concrete pedestals to miss anchor bolts.

2. Drilling and grouting of bars into existing pier cap and column shall be done in accordance with Article 584 of the Standard Specifications. Drilled and grouted bars shall maintain 5" clearance from an existing face of concrete and shall be installed such that they miss existing pier cap reinforcement. Cost included with Reinforcement Bars, Epoxy Coated.

0160461-60X78-S111-PC.dgn

PARSONS BRINCKERHOFF	USER NAME = poteld	DESIGNED - I.J.L	REVISED -	STATE OF ILLINOIS DEPARTMENT OF TRANSPORTATION	PIERS C6 TO C8 DETAILS STRUCTURE NO. 016-0461	F.A.I. RTE.	SECTION	COUNTY	TOTAL SHEETS	SHEET NO.
		CHECKED - JZ	REVISED -			90/94/290	2014-004 R&B (WB)	COOK	706	388
	PLOT SCALE = N.T.S.	DRAWN - I.J.L	REVISED -					CONTRACT NO. 60X78		
	PLOT DATE = 3/23/2016	CHECKED - JIG	REVISED -		SHEET NO. S2-111 OF S2-145 SHEETS			ILLINOIS FED. AID PROJECT		

HBM ENGINEERING GROUP, LLC	USER NAME = ahmad.issa	DESIGNED -	REVISED -	STATE OF ILLINOIS DEPARTMENT OF TRANSPORTATION	EXISTING RECORD DRAWINGS	F.A.I. RTE.	SECTION	COUNTY	TOTAL SHEETS	SHEET NO.
		CHECKED -	REVISED -			90/94/290	2014-013R&B-R	COOK	1972	1753
	PLOT SCALE = N.T.S	DRAWN -	REVISED -					CONTRACT NO. 60X93		
	PLOT DATE = 7/26/2018	CHECKED - MI, MAI	REVISED -					ILLINOIS FED. AID PROJECT		

FILE NAME: pw:\\617479-PWINT.aecomonline.local:AECOM_DS02_NA\Documents\01 Americas\Transportation\60269938 Circle\Phase_II\000_CAD\008_Structural\Structural\Structure_016-1718\Existing Plans\33906-60X93-SXX-Existing176

2:24:10 PM

FOR INFORMATION ONLY

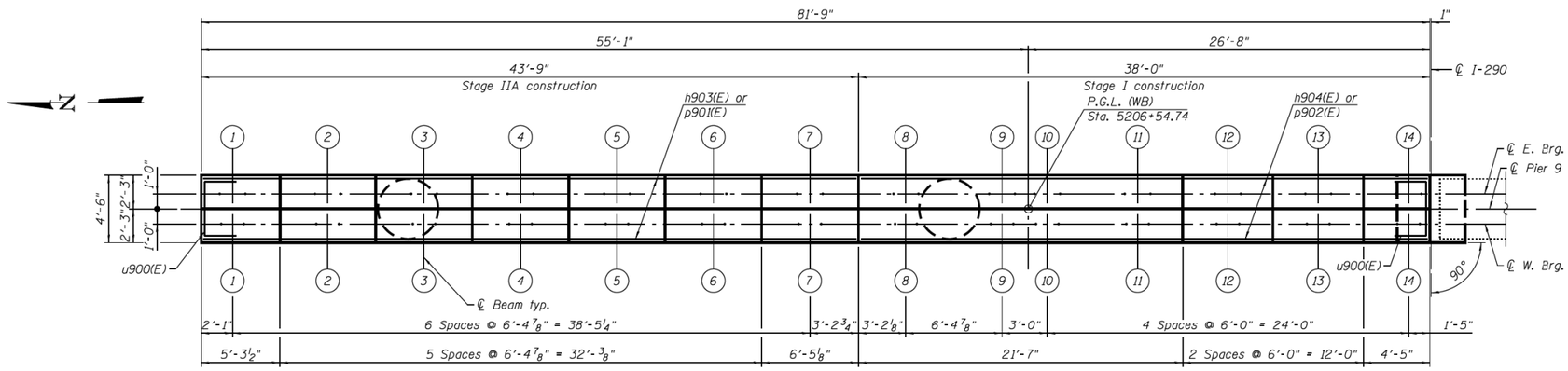

TOP PLAN

TOP OF SEAT ELEVATION

Beam No.	E. Seat Elevation	W. Seat Elevation
1	607.31	607.19
2	607.44	607.32
3	607.58	607.46
4	607.71	607.59
5	607.84	607.72
6	607.98	607.86
7	608.11	607.99
8	608.23	608.11
9	608.23	608.11
10	608.23	608.11
11	608.23	608.11
12	608.13	608.03
13	608.00	607.90
14	607.88	607.78

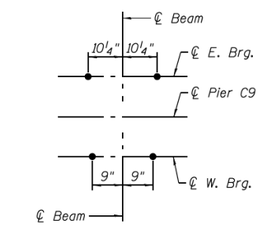

ANCHOR BOLT LAYOUT

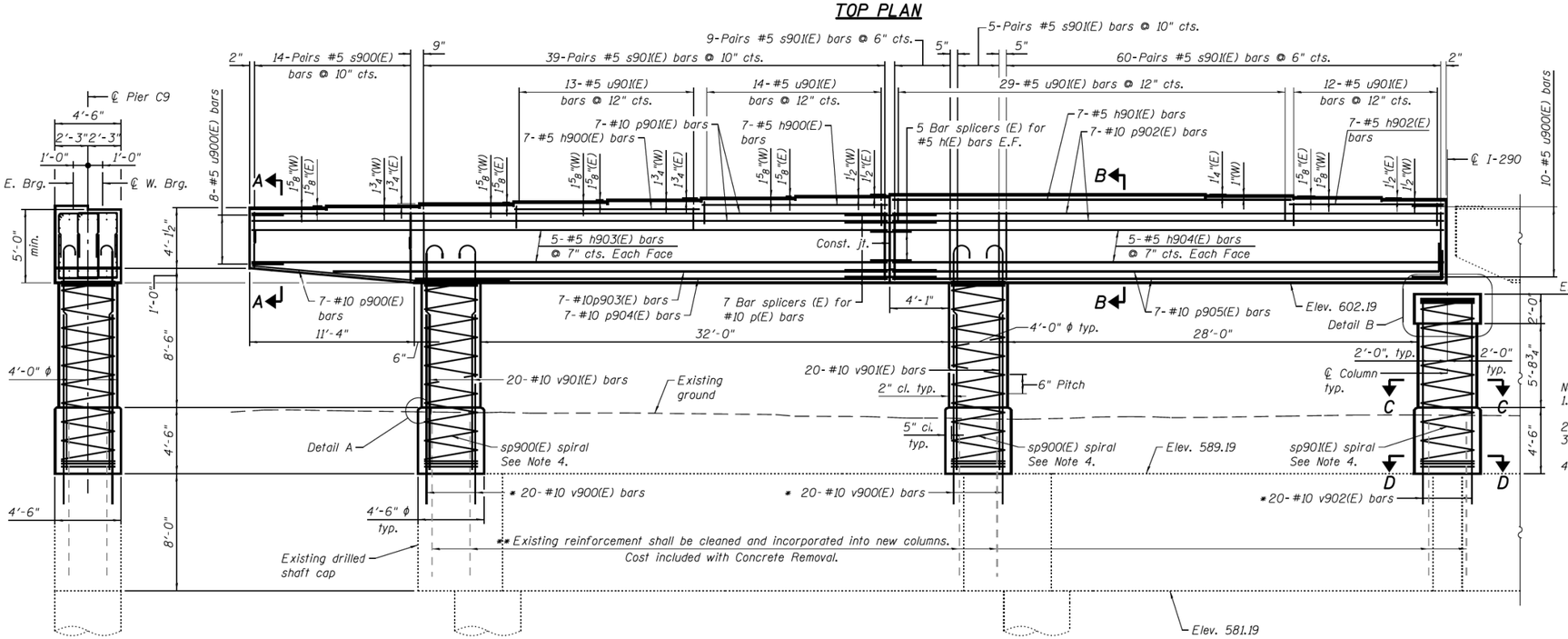

Notes:
1. Space reinforcement in cap to miss anchor bolts.
2. Pour steps monolithically with cap.
3. For Sections A-A, B-B, C-C & D-D and Details A & B, see sheet S2-113.
4. sp900(E) & sp901(E) spiral.
   1) Provide 1 1/2 extra turns, shop welded together per AWS D1.4 top and bottom. Extend spiral 2" into pier cap or column cap. Provide 4-#4 spacers or equivalent.
   2) When splicing spiral reinforcement is necessary, the spiral shall be provided with 1 1/2 extra turns at the ends to be spliced. These additional turns shall either be welded together according to AWS D1.4 or shall both terminate with a 135° standard hook.

END VIEW

ELEVATION

(Looking East)

* Drill and grout bars according to Article 584 of the Std. Specs., with a minimum embedment of 2'-1". Cost included in the cost of Reinforcement Bars, Epoxy Coated.

** Any reinforcement bars that are damaged during concrete removal operations shall be repaired or replaced using an approved bar splicer or anchorage system. Cost incidental to Concrete Removal.

MINIMUM BAR LAP

#5 bar = 3'-3"
#10 bar = 10'-10"

0160461-60X78-S112-PC9.dgn

PARSONS BRINCKERHOFF	USER NAME = poteld	DESIGNED - PJL	REVISED -	STATE OF ILLINOIS DEPARTMENT OF TRANSPORTATION	PIER C9 STRUCTURE NO. 016-0461	F.A.I. RTE.	SECTION	COUNTY	TOTAL SHEETS	SHEET NO.
		CHECKED - WAH	REVISED -			90/94/290	2014-004 R&B (WB)	COOK	706	389
	PLOT SCALE = N.T.S.	DRAWN - DCP	REVISED -					CONTRACT NO. 60X78		
	PLOT DATE = 3/23/2016	CHECKED - JIG	REVISED -		SHEET NO. S2-112 OF S2-145 SHEETS			ILLINOIS FED. AID PROJECT		

HBM ENGINEERING GROUP, LLC	USER NAME = ahmad.issa	DESIGNED -	REVISED -	STATE OF ILLINOIS DEPARTMENT OF TRANSPORTATION	EXISTING RECORD DRAWINGS	F.A.I. RTE.	SECTION	COUNTY	TOTAL SHEETS	SHEET NO.
		CHECKED -	REVISED -			90/94/290	2014-013R&B-R	COOK	1972	1754
	PLOT SCALE = N.T.S	DRAWN -	REVISED -					CONTRACT NO. 60X93		
	PLOT DATE = 7/26/2018	CHECKED - MI, MAI	REVISED -					ILLINOIS FED. AID PROJECT		

FILE NAME: pw:\\617479-PWINT.aecomonline.local:AECOM_DS02_NA\Documents\01 Americas\Transportation\60269938 Circle\Phase_II\000_CAD\008_Structural\Structure_016-1718\Existing Plans\33906-60X93-SXX-Existing177

2:24:18 PM

FOR INFORMATION ONLY

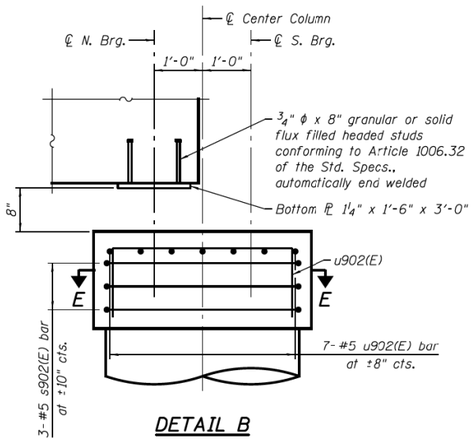

DETAIL B

Pier cap and column reinforcement not shown for clarity

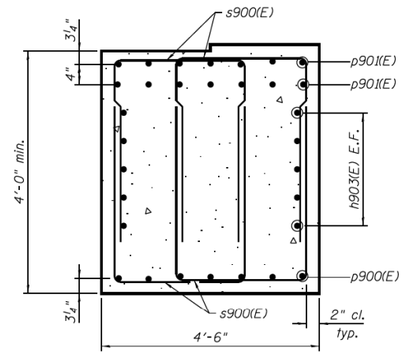

SECTION A-A

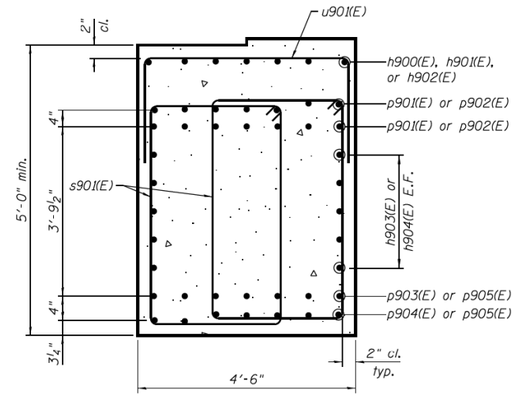

SECTION B-B

BILL OF MATERIAL

Bar	No.	Size	Length	Shape
h900(E)	14	#5	12'-6"	
h901(E)	7	#5	27'-3"	
h902(E)	7	#5	10'-1"	
h903(E)	10	#5	43'-5"	
h904(E)	10	#5	37'-8"	
p900(E)	7	#10	22'-1"	
p901(E)	14	#10	43'-5"	
p902(E)	14	#10	37'-9"	
p903(E)	7	#10	38'-0"	
p904(E)	7	#10	32'-6"	
p905(E)	14	#10	39'-7"	
s900(E)	56	#5	9'-7"	
s901(E)	226	#5	15'-9"	
s902(E)	3	#5	17'-7"	
* sp900(E)	2	#5	13'-2"	
* sp901(E)	1	#5	11'-10"	
u900(E)	18	#5	11'-2"	
u901(E)	68	#5	8'-6"	
u902(E)	12	#5	7'-6"	
v900(E)	40	#10	13'-3"	
v901(E)	40	#10	16'-5"	
v902(E)	20	#10	14'-3"	
Structure Excavation			Cu. Yd.	21
Concrete Structures			Cu. Yd.	91.9
Reinforcement Bars, Epoxy Coated			Pound	23,610
Concrete Sealer			Sq. Ft.	2,104

* Length is height of spiral

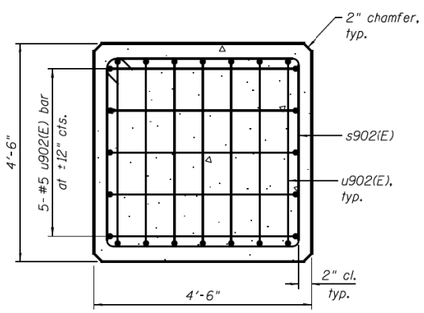

SECTION E-E

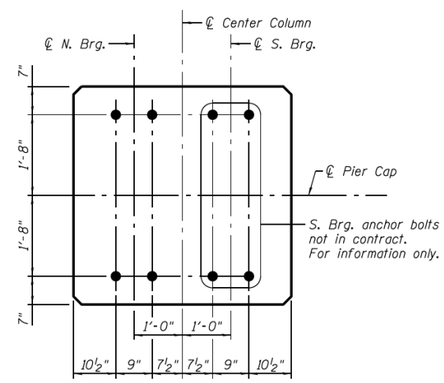

ANCHOR BOLT LAYOUT AT NESTED BEARING

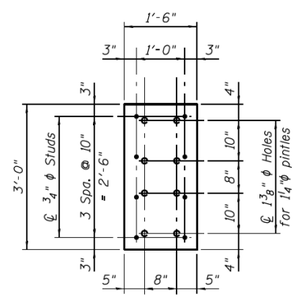

BOTTOM PLATE

Cost included with Concrete Structures.

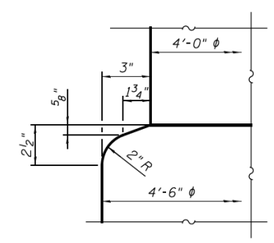

DETAIL A

Note:
1. Reinforcement bars designated (E) shall be epoxy coated.
2. Space reinforcement in column cap to miss anchor bolts.
3. Bars equally spaced, unless otherwise noted.
4. Apply concrete sealer to all exposed concrete surfaces of the pier.
5. All edges shall have standard 3/4" chamfer, unless otherwise noted.
6. Spirals are measured vertically.

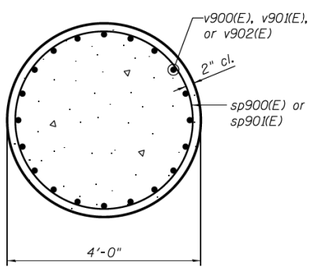

SECTION C-C

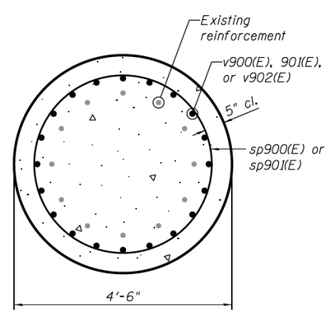

SECTION D-D

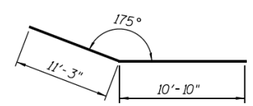

BAR p900(E)

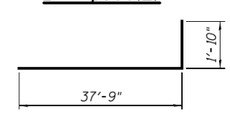

BAR p905(E)

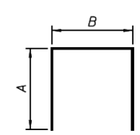

BARS

A & B DIMENSIONS

Bar	A	B
s900(E)	3'-5"	2'-9"
u900(E)	3'-6"	4'-2"
u901(E)	2'-2"	4'-2"
u902(E)	1'-8"	4'-2"

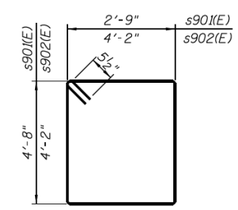

BARS s901(E) & s902(E)

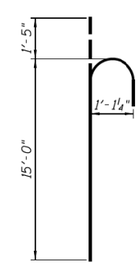

BAR v901(E)

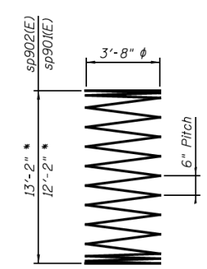

BARS sp900(E) & sp901(E)

PARSONS BRINCKERHOFF	USER NAME = poteld	DESIGNED - PJL	REVISED -	STATE OF ILLINOIS DEPARTMENT OF TRANSPORTATION	PIER C9 DETAILS STRUCTURE NO. 016-0461	F.A.I. RTE.	SECTION	COUNTY	TOTAL SHEETS	SHEET NO.
		CHECKED - WAH	REVISED -			90/94/290	2014-004 R&B (WB)	COOK	706	390
	PLOT SCALE = N.T.S.	DRAWN - DCP	REVISED -					CONTRACT NO. 60X78		
	PLOT DATE = 3/23/2016	CHECKED - JIG	REVISED -		SHEET NO. S2-113 OF S2-145 SHEETS			ILLINOIS FED. AID PROJECT		

0160461-60X78-S113-PC9.dgn

HBM ENGINEERING GROUP, LLC	USER NAME = ahmad.issa	DESIGNED -	REVISED -	STATE OF ILLINOIS DEPARTMENT OF TRANSPORTATION	EXISTING RECORD DRAWINGS	F.A.I. RTE.	SECTION	COUNTY	TOTAL SHEETS	SHEET NO.
		CHECKED -	REVISED -			90/94/290	2014-013R&B-R	COOK	1972	1755
	PLOT SCALE = N.T.S	DRAWN -	REVISED -					CONTRACT NO. 60X93		
	PLOT DATE = 7/26/2018	CHECKED - MI, MAI	REVISED -					ILLINOIS FED. AID PROJECT		

FILE NAME: pw:\\61174 79-PWINT.aecomonline.local:AECOM_DS02_NA\Documents\01 Americas\Transportation\60269938 Circle\Phase_II\000_CAD\008_Structural\Structure_016-1718\Existing Plans\33906-60X93-SXX-Existing178

2:24:27 PM

FOR INFORMATION ONLY

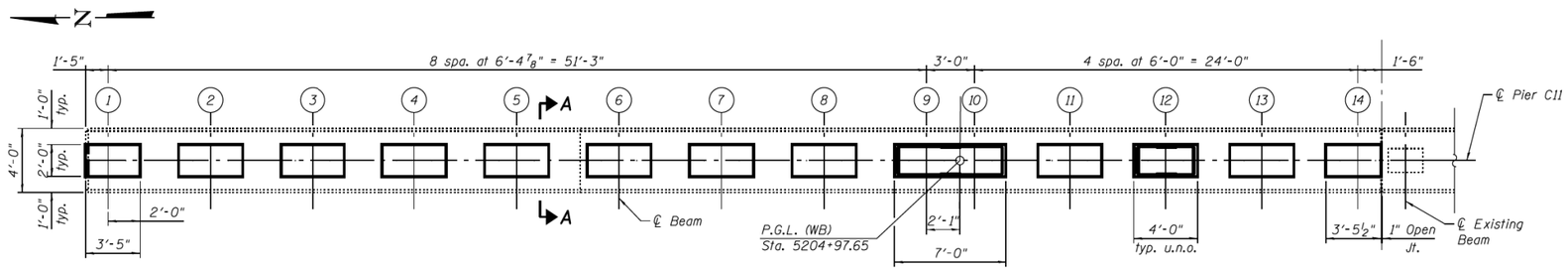

PLAN

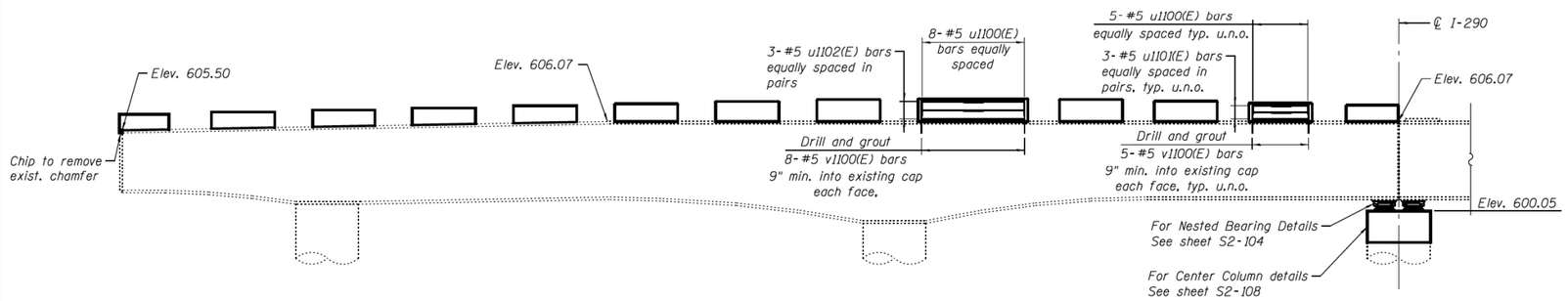

ELEVATION

(Looking East)

PEDESTAL HEIGHT, "H"

Beam	Pier C11
1	1'-0"
2	1'-0 1/4"
3	1'-0 3/8"
4	1'-0 5/8"
5	1'-0 3/4"
6	1'-1 1/2"
7	1'-3 1/8"
8	1'-4 5/8"
9	1'-5 1/4"
10	1'-5 1/4"
11	1'-4 5/8"
12	1'-3 1/4"
13	1'-3 3/4"
14	1'-0 1/4"

BEAM SEAT ELEVATION

Beam	Pier C11
1	606.53
2	606.66
3	606.79
4	606.93
5	607.06
6	607.19
7	607.33
8	607.45
9	607.51
10	607.51
11	607.46
12	607.34
13	607.22
14	607.09

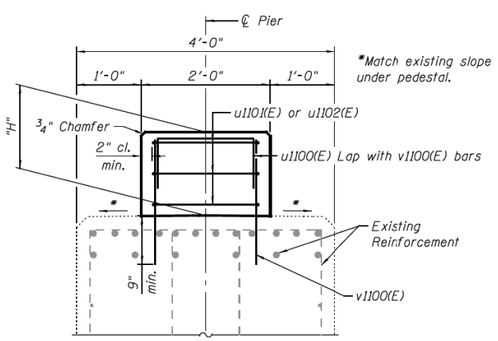

SECTION A-A

(Anchor bolts not shown for clarity)

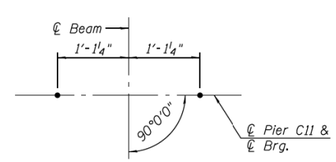

ANCHOR BOLT LAYOUT

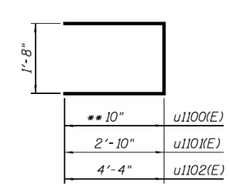

BARS u1100(E) TO u1102(E)

**Cut bar in field to fit.

BILL OF MATERIAL

	Bar	No.	Size	Length	Shape
	u1100(E)	68	#5	3'-4"	
	u1101(E)	72	#5	7'-4"	
	u1102(E)	6	#5	10'-4"	
***	v1100(E)	136	#5	2'-0"	
	Reinforcement Bars, Epoxy Coated			Pound	1,140
	Concrete Structures			Cu. Yds.	4.8

*** Cut bar in field to fit.

Notes:

1. Beam seat elevations and pedestal heights, "H", were determined based on data from existing plans. Prior to ordering any material, the Contractor shall verify in the field all beam seat heights and shim thickness dimensions. Space reinforcement in concrete pedestals to miss anchor bolts.

2. Drilling and grouting of bars into existing pier cap and column shall be done in accordance with Article 584 of the Standard Specifications. Drilled and grouted bars shall maintain 5" clearance from an existing face of concrete and shall be installed such that they miss existing pier cap reinforcement. Cost included with Reinforcement Bars, Epoxy Coated.

0160461-60X78-S114-PC11.dgn

PARSONS BRINCKERHOFF	USER NAME = poteld	DESIGNED - IJL	REVISED -	STATE OF ILLINOIS DEPARTMENT OF TRANSPORTATION	PIER C11 DETAILS STRUCTURE NO. 016-0461	F.A.I. RTE.	SECTION	COUNTY	TOTAL SHEETS	SHEET NO.
		CHECKED - JZ	REVISED -			90/94/290	2014-004 R&B (WB)	COOK	706	391
	PLOT SCALE = N.T.S.	DRAWN - IJL	REVISED -					CONTRACT NO. 60X78		
	PLOT DATE = 3/23/2016	CHECKED - JIG	REVISED -		SHEET NO. S2-114 OF S2-145 SHEETS		ILLINOIS FED. AID PROJECT			

HBM ENGINEERING GROUP, LLC	USER NAME = ahmad.issa	DESIGNED -	REVISED -	STATE OF ILLINOIS DEPARTMENT OF TRANSPORTATION	EXISTING RECORD DRAWINGS	F.A.I. RTE.	SECTION	COUNTY	TOTAL SHEETS	SHEET NO.
		CHECKED -	REVISED -			90/94/290	2014-013R&B-R	COOK	1972	1756
	PLOT SCALE = N.T.S	DRAWN -	REVISED -					CONTRACT NO. 60X93		
	PLOT DATE = 7/26/2018	CHECKED - MI, MAI	REVISED -				ILLINOIS FED. AID PROJECT			

FILE NAME: pw:\\617479-PWINT.aecomonline.local:AECOM_DS02_NA\Documents\01 Americas\Transportation\60269938 Circle\Phase_II\000_CAD\008_Structural\Structure_016-1718\Existing Plans\33906-60X93-SXX-Existing179

2:24:35 PM

FOR INFORMATION ONLY

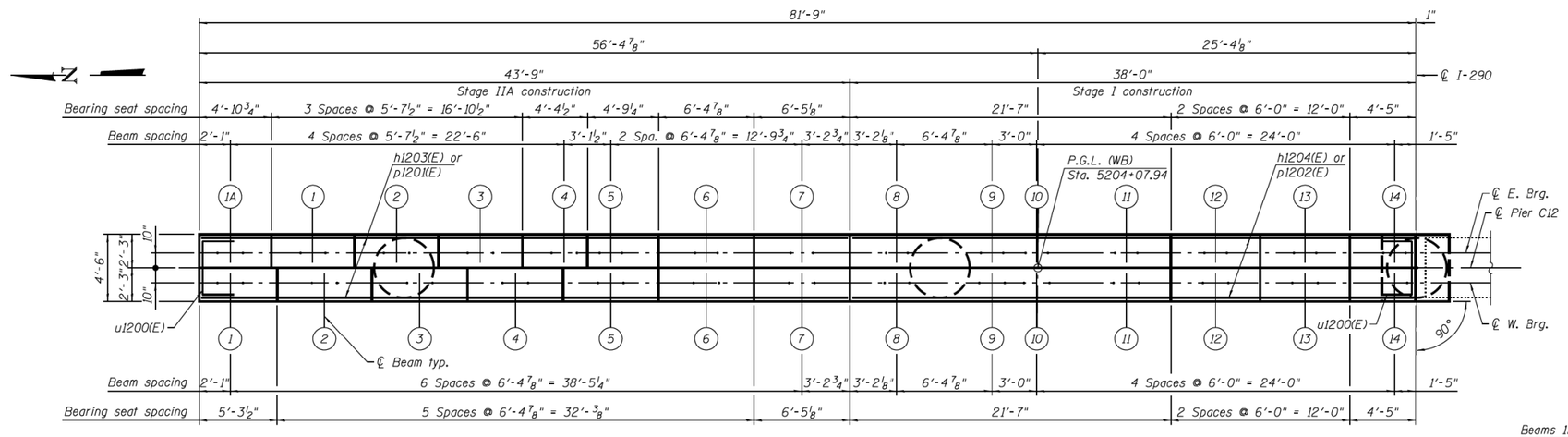

TOP OF SEAT ELEVATION

Beam No.	E. Seat Elevation	W. Seat Elevation
1A	606.20	
1	606.32	606.27
2	606.43	606.40
3	606.55	606.53
4	606.67	606.66
5	606.73	606.80
6	606.86	606.93
7	606.99	607.07
8	607.12	607.19
9	607.12	607.19
10	607.12	607.19
11	607.12	607.19
12	607.01	607.08
13	606.89	606.96
14	606.76	606.83

TOP PLAN

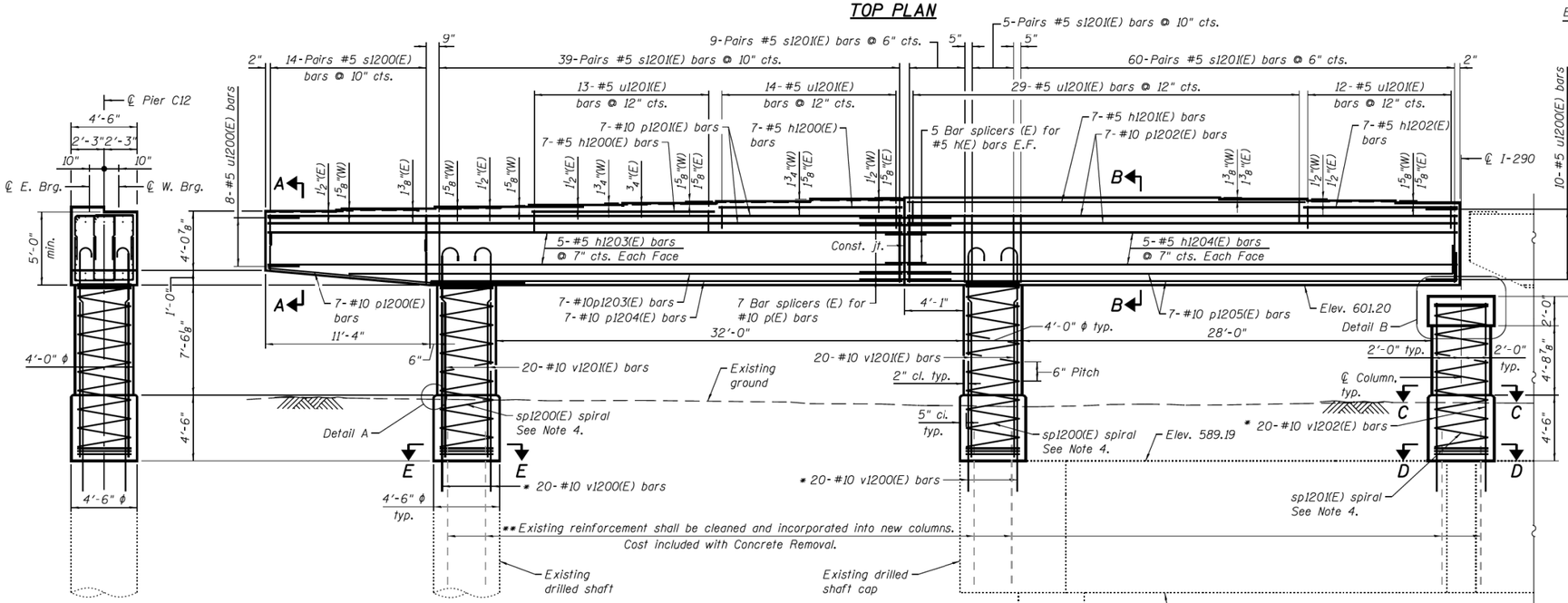

END VIEW

ELEVATION
(Looking East)

* Drill and grout bars according to Article 584 of the Std. Specs., with a minimum embedment of 2'-1". Cost included in the cost of Reinforcement Bars, Epoxy Coated.

** Any reinforcement bars that are damaged during concrete removal operations shall be repaired or replaced using an approved bar splicer or anchorage system. Cost incidental to Concrete Removal.

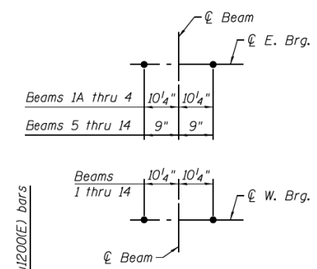

ANCHOR BOLT LAYOUT

Notes:
1. Space reinforcement in cap to miss anchor bolts.
2. Pour steps monolithically with cap.
3. For Sections A-A, B-B, C-C, D-D & E-E and Details A & B, see sheet S2-116.
4. sp1200(E) & sp1201(E) spiral.
   1) Provide 1½ extra turns, shop welded together per AWS D1.4 top and bottom. Extend spiral 2" into pier cap or column cap. Provide 4-#4 spacers or equivalent.
   2) When splicing spiral reinforcement is necessary, the spiral shall be provided with 1½ extra turns at the ends to be spliced. These additional turns shall either be welded together according to AWS D1.4 or shall both terminate with a 135° standard hook.

MINIMUM BAR LAP
#5 bar = 3'-3"
#10 bar = 10'-10"

PARSONS BRINCKERHOFF	USER NAME = potekd	DESIGNED - PJL	REVISED -
		CHECKED - WAH	REVISED -
	PLOT SCALE = N.T.S.	DRAWN - DCP	REVISED -
	PLOT DATE = 3/23/2016	CHECKED - JIG	REVISED -

STATE OF ILLINOIS
DEPARTMENT OF TRANSPORTATION

PIER C12
STRUCTURE NO. 016-0461
SHEET NO. S2-115 OF S2-145 SHEETS

F.A.I. RTE.	SECTION	COUNTY	TOTAL SHEETS	SHEET NO.
90/94/290	2014-004 R&B (WB)	COOK	706	392
		CONTRACT NO. 60X78		
		ILLINOIS FED. AID PROJECT		

016046I-60X78-S115-PC12.dgn

HBM ENGINEERING GROUP, LLC	USER NAME = ahmad.issa	DESIGNED -	REVISED -
		CHECKED -	REVISED -
	PLOT SCALE = N.T.S	DRAWN -	REVISED -
	PLOT DATE = 7/26/2018	CHECKED - MI, MAI	REVISED -

STATE OF ILLINOIS
DEPARTMENT OF TRANSPORTATION

EXISTING RECORD DRAWINGS

F.A.I. RTE.	SECTION	COUNTY	TOTAL SHEETS	SHEET NO.
90/94/290	2014-013R&B-R	COOK	1972	1757
		CONTRACT NO. 60X93		
		ILLINOIS FED. AID PROJECT		

FILE NAME: pw:\\617479-PWINT.aecomonline.local:AECOM_DS02_NA\Documents\01 Americas\Transportation\60269938 Circle\Phase_II\000_CAD\008_Structural\Structure_016-1718\Existing Plans\33906-60X93-SXX-Existing180
2:24:43 PM

FOR INFORMATION ONLY

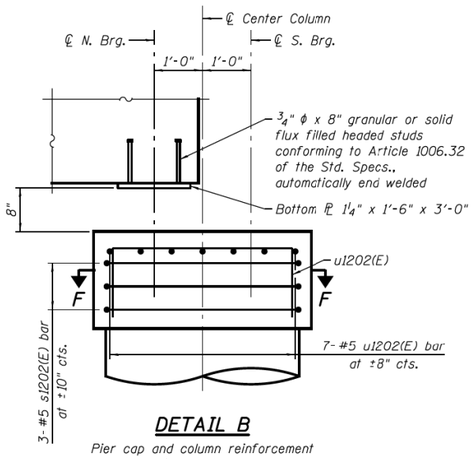

DETAIL B

Pier cap and column reinforcement not shown for clarity

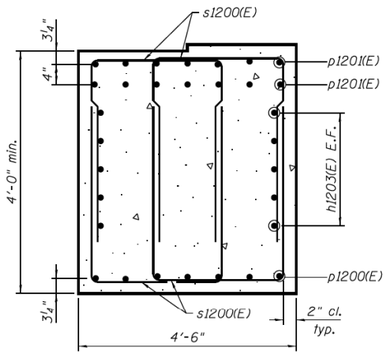

SECTION A-A

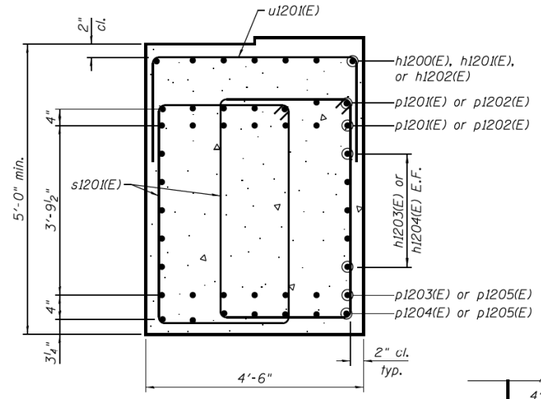

SECTION B-B

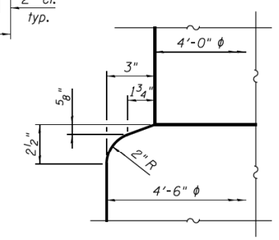

DETAIL A

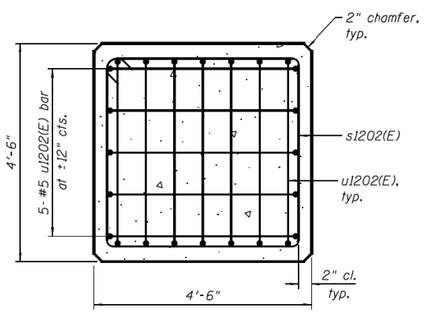

SECTION F-F

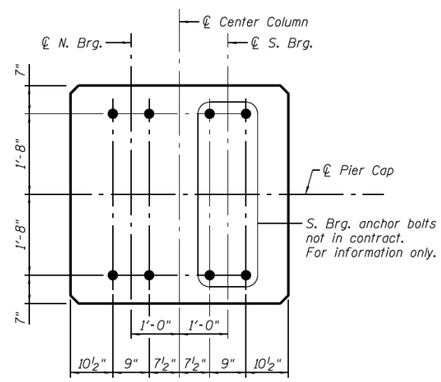

ANCHOR BOLT LAYOUT AT NESTED BEARING

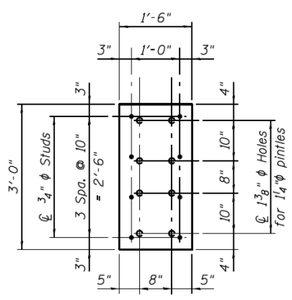

BOTTOM PLATE

Cost included with Concrete Structures.

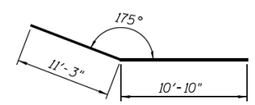

BAR p1200(E)

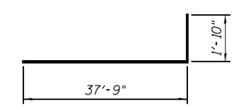

BAR p1205(E)

BILL OF MATERIAL

Bar	No.	Size	Length	Shape
h1200(E)	14	#5	12'-6"	
h1201(E)	7	#5	27'-3"	
h1202(E)	7	#5	10'-1"	
h1203(E)	10	#5	43'-5"	
h1204(E)	10	#5	37'-8"	
p1200(E)	7	#10	22'-1"	
p1201(E)	14	#10	43'-5"	
p1202(E)	14	#10	37'-9"	
p1203(E)	7	#10	38'-0"	
p1204(E)	7	#10	32'-6"	
p1205(E)	14	#10	39'-7"	
s1200(E)	56	#5	9'-7"	
s1201(E)	226	#5	15'-9"	
s1202(E)	3	#5	17'-7"	
* sp1200(E)	2	#5	12'-2"	
* sp1201(E)	1	#5	11'-0"	
u1200(E)	18	#5	11'-2"	
u1201(E)	68	#5	8'-6"	
u1202(E)	12	#5	7'-6"	
v1200(E)	40	#10	13'-3"	
v1201(E)	40	#10	15'-5"	
v1202(E)	20	#10	13'-0"	
Structure Excavation			Cu. Yd.	21
Concrete Structures			Cu. Yd.	89.5
Reinforcement Bars, Epoxy Coated			Pound	23,290
Concrete Sealer			Sq. Ft.	2,053

* Length is height of spiral

Note:
1. Reinforcement bars designated (E) shall be epoxy coated.
2. Space reinforcement in column cap to miss anchor bolts.
3. Bars equally spaced, unless otherwise noted.
4. Apply concrete sealer to all exposed concrete surfaces of the pier.
5. All edges shall have standard 3/4" chamfer, unless otherwise noted.
6. Spirals are measured vertically.

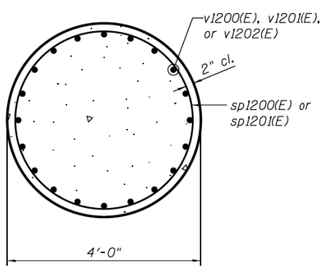

SECTION C-C

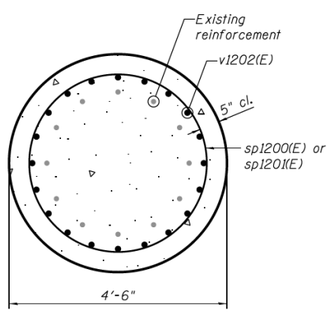

SECTION D-D

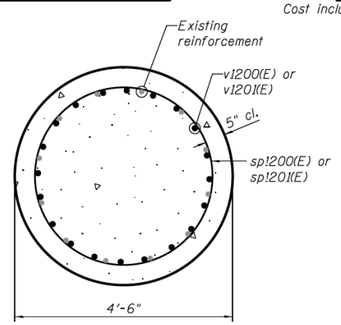

SECTION E-E

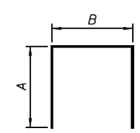

BARS

A & B DIMENSIONS

Bar	A	B
s1200(E)	3'-5"	2'-9"
u1200(E)	3'-6"	4'-2"
u1201(E)	2'-2"	4'-2"
u1202(E)	1'-8"	4'-2"

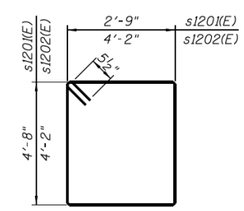

BARS s1201(E) & s1202(E)

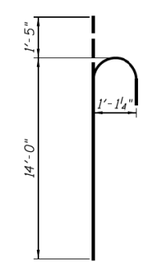

BAR v1201(E)

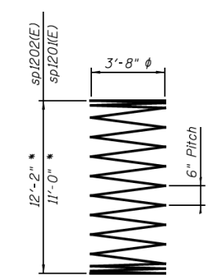

BARS sp1200(E) & sp1201(E)

PARSONS BRINCKERHOFF	USER NAME = poteld	DESIGNED - PJL	REVISED -	STATE OF ILLINOIS DEPARTMENT OF TRANSPORTATION	PIER C12 DETAILS STRUCTURE NO. 016-0461	F.A.I. RTE.	SECTION	COUNTY	TOTAL SHEETS	SHEET NO.
		CHECKED - WAH	REVISED -			90/94/290	2014-004 R&B (WB)	COOK	706	393
	PLOT SCALE = N.T.S.	DRAWN - DCP	REVISED -					CONTRACT NO. 60X78		
	PLOT DATE = 3/23/2016	CHECKED - JIG	REVISED -		SHEET NO. S2-116 OF S2-145 SHEETS			ILLINOIS FED. AID PROJECT		

0160461-60X78-S116-PC12.dgn

HBM ENGINEERING GROUP, LLC	USER NAME = ahmad.issa	DESIGNED -	REVISED -	STATE OF ILLINOIS DEPARTMENT OF TRANSPORTATION	EXISTING RECORD DRAWINGS	F.A.I. RTE.	SECTION	COUNTY	TOTAL SHEETS	SHEET NO.
		CHECKED -	REVISED -			90/94/290	2014-013R&B-R	COOK	1972	1758
	PLOT SCALE = N.T.S	DRAWN -	REVISED -					CONTRACT NO. 60X93		
	PLOT DATE = 7/26/2018	CHECKED - MI, MAI	REVISED -					ILLINOIS FED. AID PROJECT		

FILE NAME: pw:\\67479-PWINT.aecomonline.local:AECOM_DS02_NA\Documents\01 Americas\Transportation\60269938 Circle\Phase_II\000_CAD\008_Structural\Structure_016-1718\Existing Plans\33906-60X93-SXX-Existing181

2:24:52 PM

FOR INFORMATION ONLY

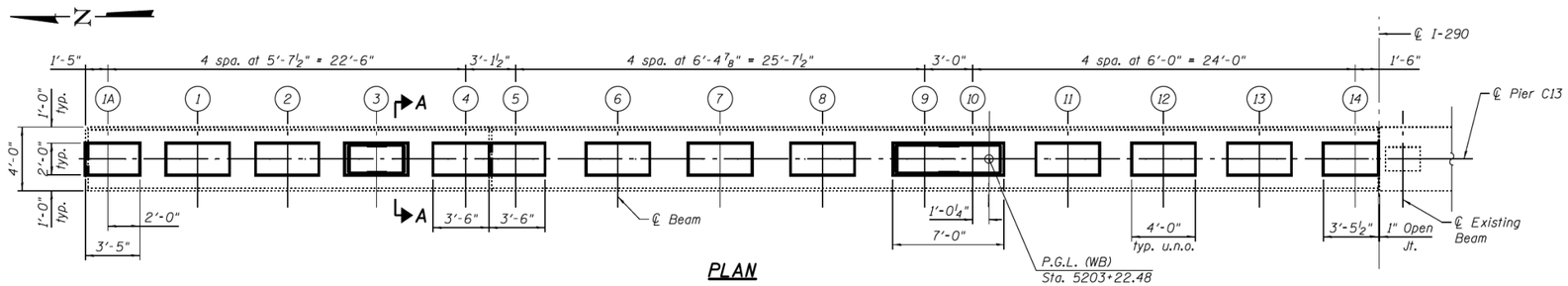

PLAN

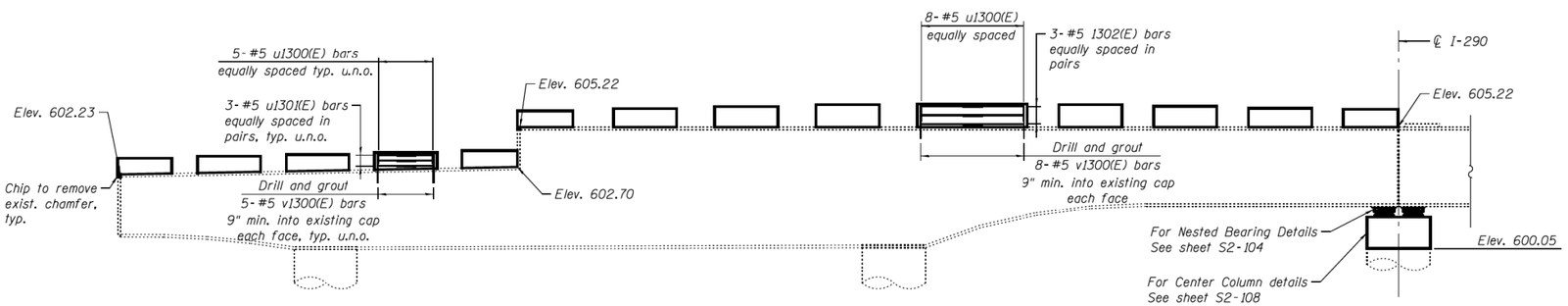

ELEVATION

(Looking East)

*Match existing slope under pedestal.

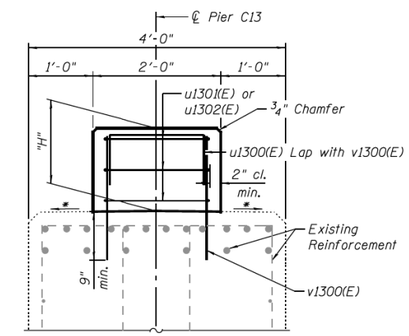

SECTION A-A

(Anchor bolts not shown for clarity)

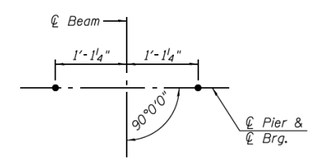

ANCHOR BOLT LAYOUT

PEDESTAL HEIGHT, "H"

Beam	Pier C13
1A	1'-0"
1	1'-0¼"
2	1'-0⅜"
3	1'-0½"
4	1'-0⅝"
5	1'-0¼"
6	1'-1⅞"
7	1'-3½"
8	1'-4⅛"
9	1'-5⅝"
10	1'-5⅝"
11	1'-5"
12	1'-3⅝"
13	1'-2⅛"
14	1'-1⅜"

BEARING SEAT ELEVATION

Beam	Pier C13
1A	603.26
1	603.38
2	603.49
3	603.61
4	603.73
5	606.24
6	606.38
7	606.51
8	606.63
9	606.69
10	606.69
11	606.64
12	606.53
13	606.40
14	606.34

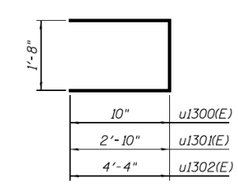

BARS u1300(E) TO u1303(E)

BILL OF MATERIAL

	Bar	No.	Size	Length	Shape
	u1300(E)	73	#5	3'-4"	
	u1301(E)	72	#5	7'-4"	
	u1302(E)	6	#5	10'-4"	
***	v1100(E)	146	#5	2'-0"	
	Reinforcement Bars, Epoxy Coated			Pound	1,310
	Concrete Structures			Cu. Yd.	5.2

*** Cut bar in field to fit.

Notes:

1. Beam seat elevations and pedestal heights, "H", were determined based on data from existing plans. Prior to ordering any material, the Contractor shall verify in the field all beam seat heights and shim thickness dimensions. Space reinforcement in concrete pedestals to miss anchor bolts.

2. Drilling and grouting of bars into existing pier cap and column shall be done in accordance with Article 584 of the Standard Specifications. Drilled and grouted bars shall maintain 5" clearance from an existing face of concrete and shall be installed such that they miss existing pier cap reinforcement. Cost included with Reinforcement Bars, Epoxy Coated.

0160461-60X78-S117-PC.dgn

PARSONS BRINCKERHOFF	USER NAME = poteld	DESIGNED - I.J.L	REVISED -	STATE OF ILLINOIS DEPARTMENT OF TRANSPORTATION	PIER C13 DETAILS STRUCTURE NO. 016-0461	F.A.I. RTE.	SECTION	COUNTY	TOTAL SHEETS	SHEET NO.
		CHECKED - CL	REVISED -			90/94/290	2014-004 R&B (WB)	COOK	706	394
	PLOT SCALE = N.T.S.	DRAWN - I.J.L	REVISED -					CONTRACT NO. 60X78		
	PLOT DATE = 3/23/2016	CHECKED - JJG	REVISED -		SHEET NO. S2-117 OF S2-145 SHEETS			ILLINOIS FED. AID PROJECT		

HBM ENGINEERING GROUP, LLC	USER NAME = ahmad.issa	DESIGNED -	REVISED -	STATE OF ILLINOIS DEPARTMENT OF TRANSPORTATION	EXISTING RECORD DRAWINGS	F.A.I. RTE.	SECTION	COUNTY	TOTAL SHEETS	SHEET NO.
		CHECKED -	REVISED -			90/94/290	2014-013R&B-R	COOK	1972	1759
	PLOT SCALE = N.T.S	DRAWN -	REVISED -					CONTRACT NO. 60X93		
	PLOT DATE = 7/26/2018	CHECKED - MI, MAI	REVISED -					ILLINOIS FED. AID PROJECT		

FILE NAME: pw:\\6174479-PWINT.aecomonline.local:AECOM_DS02_NA\Documents\01 Americas\Transportation\60269938 Circle\Phase_II\000_CAD\008_Structural\Structure_016-1718\Existing Plans\33906-60X93-SXX-Existing182

2:25:01 PM

FOR INFORMATION ONLY

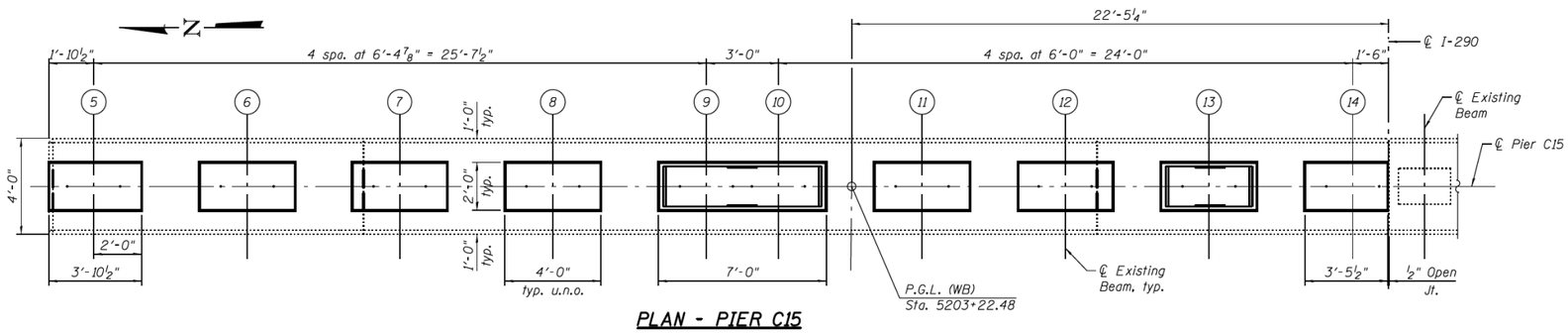

PLAN - PIER C15

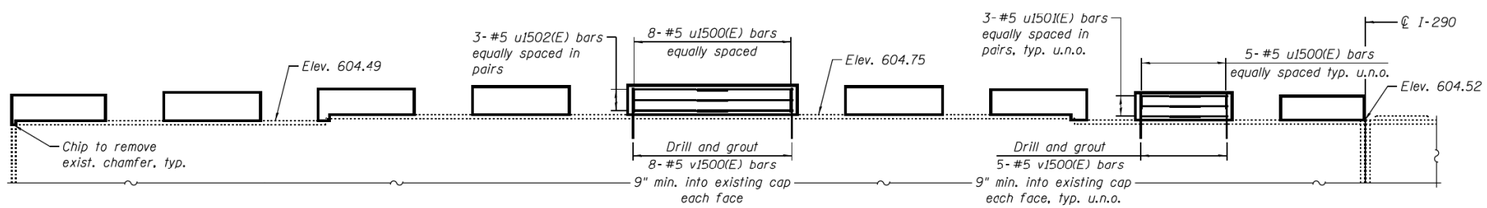

ELEVATION - PIER C15

(Looking East)

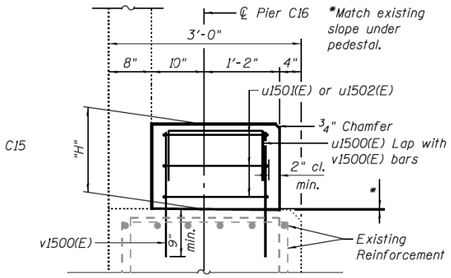

SECTION A-A

(Anchor bolts not shown for clarity)

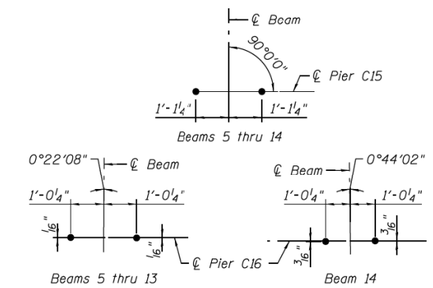

ANCHOR BOLT LAYOUT

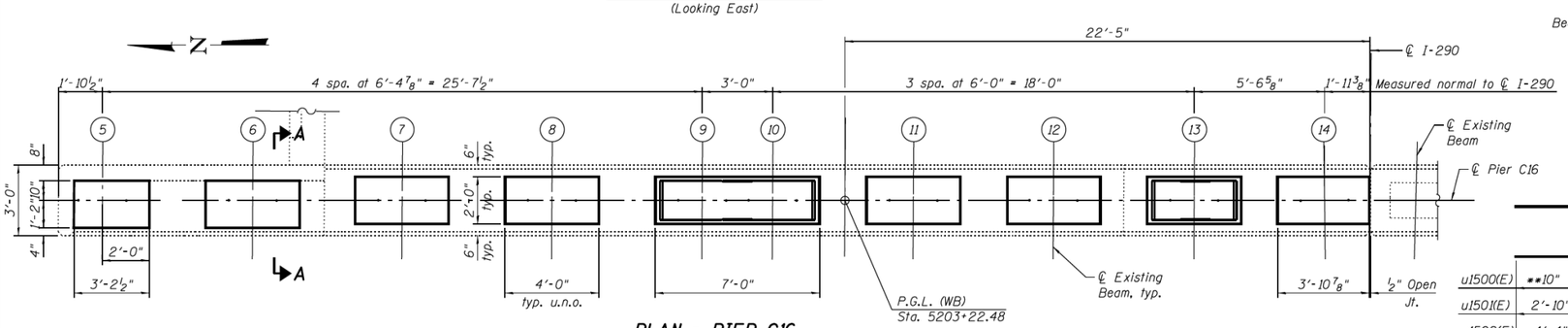

PLAN - PIER C16

PEDESTAL HEIGHT, "H"

Beam	Pier C15	Pier C16
5	1'-0¼"	10⅝"
6	1'-1⅞"	11¾"
7	1'-0⅜"	10⅛"
8	1'-1⅞"	11⅝"
9	1'-2½"	1'-1"
10	1'-2½"	1'-1"
11	1'-1⅞"	11¾"
12	1'-0⅝"	10⅜"
13	1'-1⅞"	11⅝"
14	1'-0⅜"	10⅛"

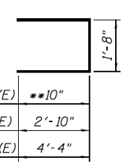

u1500(E)	**10"
u1501(E)	2'-10"
u1502(E)	4'-4"

BARS u1500(E) THRU u1502(E)

Cut bar in field to fit. * Cut bar in field to fit.

BILL OF MATERIAL

Bar	No.	Size	Length	Shape
u1500(E)	96	#5	3'-4"	
u1501(E)	96	#5	7'-4"	
u1502(E)	12	#5	10'-3"	
v1500(E)	192	#5	1'-9"	
Reinforcement Bars, Epoxy Coated			Pound	1,550
Concrete Structures			Cu. Yd.	5.9

*** Cut bar in field to fit.

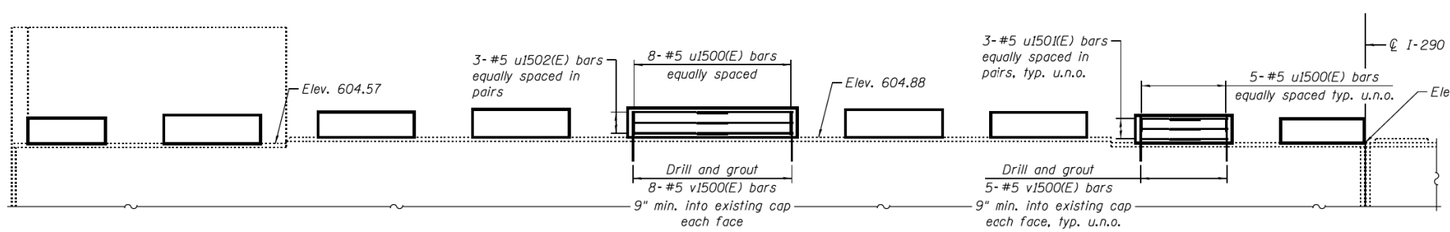

ELEVATION - PIER C16

(Looking East)

Notes:

1. Beam seat elevations and pedestal heights, "H", were determined based on data from existing plans. Prior to ordering any material, the Contractor shall verify in the field all beam seat heights and shim thickness dimensions. Space reinforcement in concrete pedestals to miss anchor bolts.
2. Drilling and grouting of bars into existing pier cap and column shall be done in accordance with Article 584 of the Standard Specifications. Drilled and grouted bars shall maintain 5" clearance from an existing face of concrete and shall be installed such that they miss existing pier cap reinforcement. Cost included with Reinforcement Bars, Epoxy Coated.

PARSONS BRINCKERHOFF	USER NAME = poteld	DESIGNED - I.J.L	REVISED -	STATE OF ILLINOIS DEPARTMENT OF TRANSPORTATION	PIERS C15 & C16 DETAILS STRUCTURE NO. 016-0461	F.A.I. RTE.	SECTION	COUNTY	TOTAL SHEETS	SHEET NO.
		CHECKED - CL	REVISED -			90/94/290	2014-004 R&B (WB)	COOK	706	395
	PLOT SCALE = N.T.S.	DRAWN - I.J.L	REVISED -					CONTRACT NO. 60X78		
	PLOT DATE = 3/23/2016	CHECKED - JIG	REVISED -		SHEET NO. S2-118 OF S2-145 SHEETS			ILLINOIS FED. AID PROJECT		

HBM ENGINEERING GROUP, LLC	USER NAME = ahmad.issa	DESIGNED -	REVISED -	STATE OF ILLINOIS DEPARTMENT OF TRANSPORTATION	EXISTING RECORD DRAWINGS	F.A.I. RTE.	SECTION	COUNTY	TOTAL SHEETS	SHEET NO.
		CHECKED -	REVISED -			90/94/290	2014-013R&B-R	COOK	1972	1760
	PLOT SCALE = N.T.S	DRAWN -	REVISED -					CONTRACT NO. 60X93		
	PLOT DATE = 7/26/2018	CHECKED - MI, MAI	REVISED -					ILLINOIS FED. AID PROJECT		

FILE NAME: pw:\\617479-PWINT.aecomonline.local:AECOM_DS02_NA\Documents\01 Americas\Transportation\60269938 Circle\Phase_II\000_CAD\008_Structural\Structure_016-1718\Existing Plans\33906-60X93-SXX-Existing183

0160461-60X78-S118-PC.dgn

2:25:09 PM

FOR INFORMATION ONLY

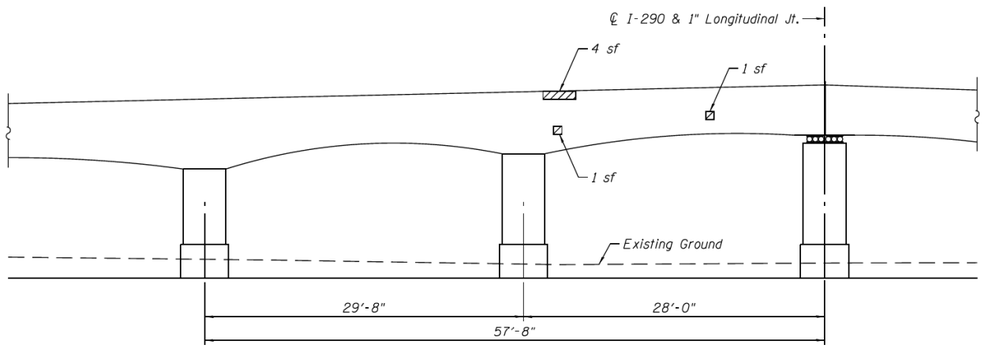

ELEVATION - PIER C2
(Looking East)

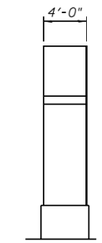

END VIEW

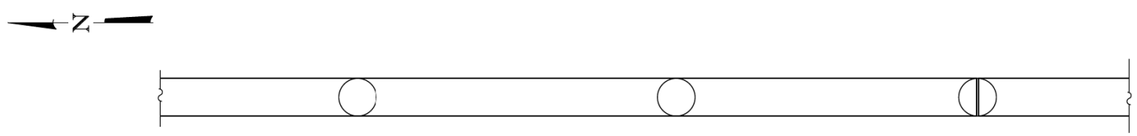

UNDERSIDE PLAN

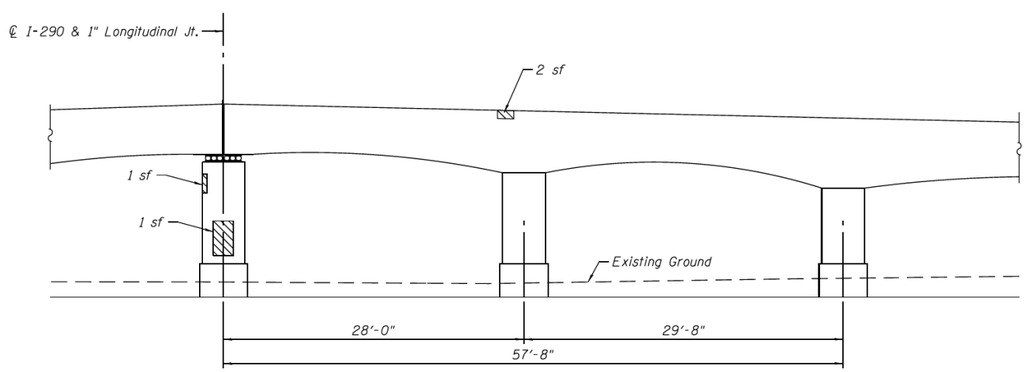

ELEVATION - PIER C2
(Looking West)

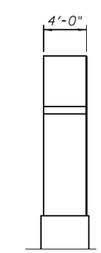

END VIEW

Note:
Area of pier repairs shown are estimated based on inspections performed in July 2012. The Engineer shall record the actual pier repair areas in the "As Built" plans. Changes in repair areas shall not be cause for additional compensation for a change in scope of the work, however, the Contractor will be paid for the quantity furnished at the unit bid price for the work.

LEGEND

Structural Repair of Concrete (Depth equal to or less than 5 Inches)

BILL OF MATERIAL

Item	Unit	Quantity
Structural Repair of Concrete (Depth equal to or less than 5 Inches)	Sq Ft	10

PARSONS BRINCKERHOFF	USER NAME = poteld	DESIGNED - HA	REVISED -	STATE OF ILLINOIS DEPARTMENT OF TRANSPORTATION	PIER C2 REPAIR STRUCTURE NO. 016-0461	F.A.I. RTE.	SECTION	COUNTY	TOTAL SHEETS / SHEET NO.
		CHECKED - PJL	REVISED -			90/94/290	2014-004 R&B (WB)	COOK	706 / 396
	PLOT SCALE = N.T.S.	DRAWN - DE	REVISED -					CONTRACT NO. 60X78	
	PLOT DATE = 3/23/2016	CHECKED - JIG	REVISED -		SHEET NO. S2-119 OF S2-145 SHEETS		ILLINOIS FED. AID PROJECT		

HBM ENGINEERING GROUP, LLC	USER NAME = ahmad.issa	DESIGNED -	REVISED -	STATE OF ILLINOIS DEPARTMENT OF TRANSPORTATION	EXISTING RECORD DRAWINGS	F.A.I. RTE.	SECTION	COUNTY	TOTAL SHEETS / SHEET NO.
		CHECKED -	REVISED -			90/94/290	2014-013R&B-R	COOK	1972 / 1761
	PLOT SCALE = N.T.S	DRAWN -	REVISED -					CONTRACT NO. 60X93	
	PLOT DATE = 7/26/2018	CHECKED - MI, MAI	REVISED -				ILLINOIS FED. AID PROJECT		

FILE NAME: pw:\\617479-PWINT.aecomonline.local:AECOM_DS02_NA\Documents\01 Americas\Transportation\60269938 Circle\Phase_II\000_CAD\008_Structural\Structure_016-1718\Existing Plans\33906-60X93-SXX-Existing184

0160461-60X78-S119-PRR.dgn

2:25:17 PM

FOR INFORMATION ONLY

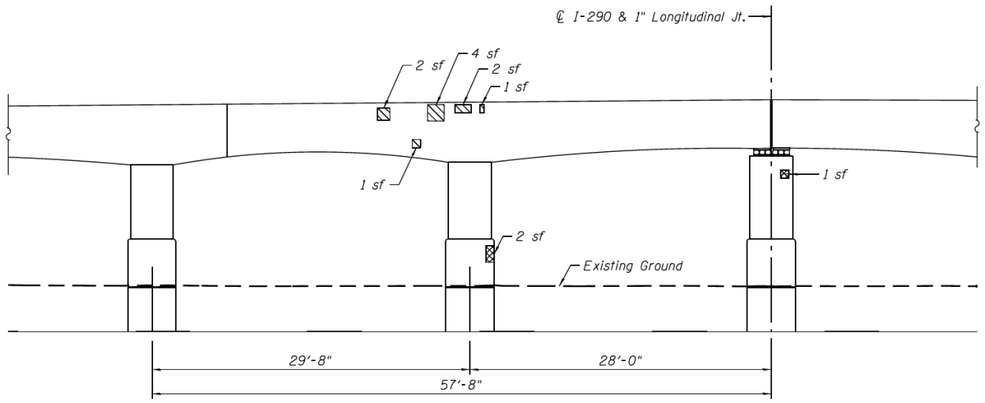

ELEVATION - PIER C3
(Looking East)

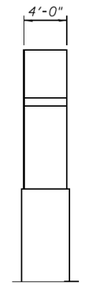

END VIEW

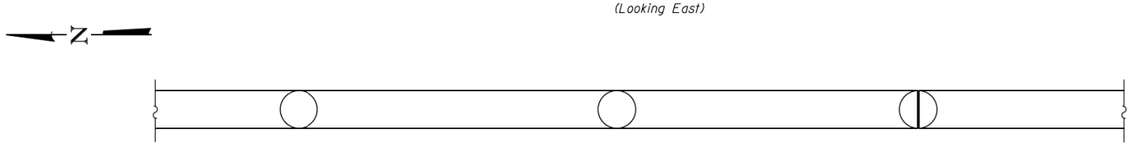

UNDERSIDE PLAN

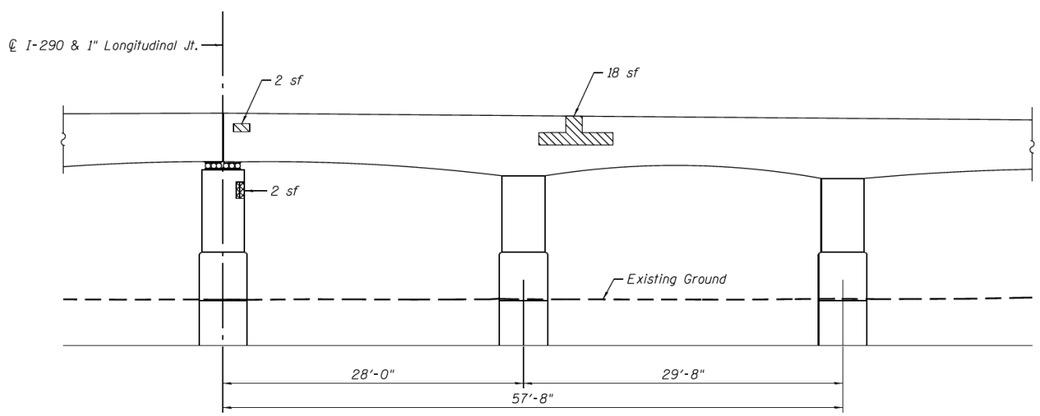

ELEVATION - PIER C3
(Looking West)

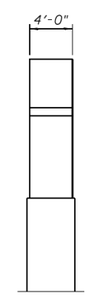

END VIEW

Note:
Area of pier repairs shown are estimated based on inspections performed in July 2012. The Engineer shall record the actual pier repair areas in the "As Built" plans. Changes in repair areas shall not be cause for additional compensation for a change in scope of the work, however, the Contractor will be paid for the quantity furnished at the unit bid price for the work.

LEGEND

Structural Repair of Concrete (Depth equal to or less than 5 Inches)

Structural Repair of Concrete (Depth greater than 5 Inches)

BILL OF MATERIAL

Item	Unit	Quantity
Structural Repair of Concrete (Depth equal to or less than 5 Inches)	Sq Ft	30
Structural Repair of Concrete (Depth greater than 5 Inches)	Sq Ft	5

PARSONS BRINCKERHOFF	USER NAME = poteld	DESIGNED - HA	REVISED -	STATE OF ILLINOIS DEPARTMENT OF TRANSPORTATION	PIER C3 REPAIR STRUCTURE NO. 016-0461	F.A.I. RTE.	SECTION	COUNTY	TOTAL SHEETS	SHEET NO.
		CHECKED - PJL	REVISED -			90/94/290	2014-004 R&B (WB)	COOK	706	397
	PLOT SCALE = N.T.S.	DRAWN - DE	REVISED -					CONTRACT NO. 60X78		
	PLOT DATE = 3/23/2016	CHECKED - JIG	REVISED -		SHEET NO. S2-120 OF S2-145 SHEETS			ILLINOIS FED. AID PROJECT		

HBM ENGINEERING GROUP, LLC	USER NAME = ahmad.issa	DESIGNED -	REVISED -	STATE OF ILLINOIS DEPARTMENT OF TRANSPORTATION	EXISTING RECORD DRAWINGS	F.A.I. RTE.	SECTION	COUNTY	TOTAL SHEETS	SHEET NO.
		CHECKED -	REVISED -			90/94/290	2014-013R&B-R	COOK	1972	1762
	PLOT SCALE = N.T.S	DRAWN -	REVISED -					CONTRACT NO. 60X93		
	PLOT DATE = 7/26/2018	CHECKED - MI, MAI	REVISED -					ILLINOIS FED. AID PROJECT		

FILE NAME: pw:\\617479-PWINT.aecomonline.local:AECOM_DS02_NA\Documents\01 Americas\Transportation\60269938 Circle\Phase_II\000_CAD\008_Structural\Structure_016-1718\Existing Plans\33906-60X93-SXX-Existing185

0160461-60X78-S120-PRR.dgn

2:25:25 PM

FOR INFORMATION ONLY

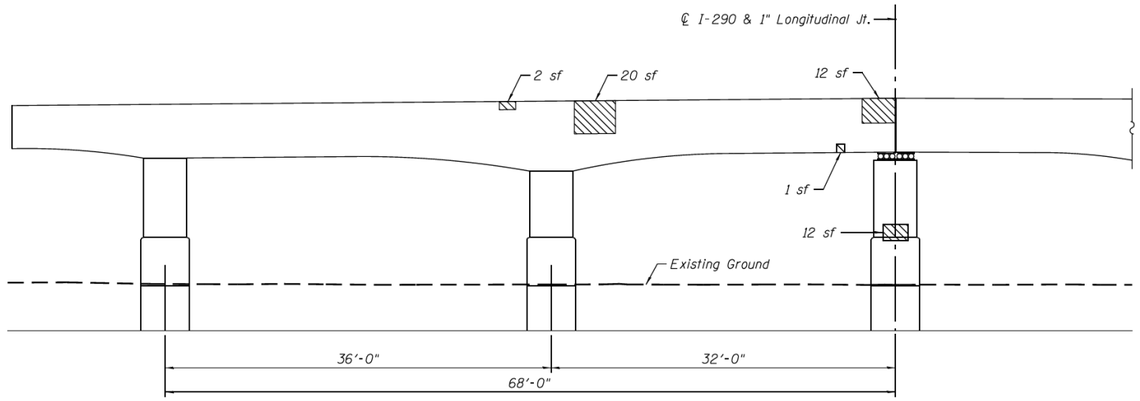

ELEVATION - PIER C5
(Looking East)

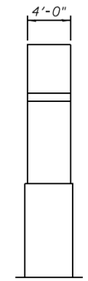

END VIEW

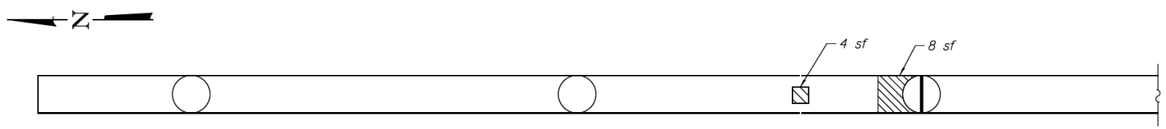

UNDERSIDE PLAN

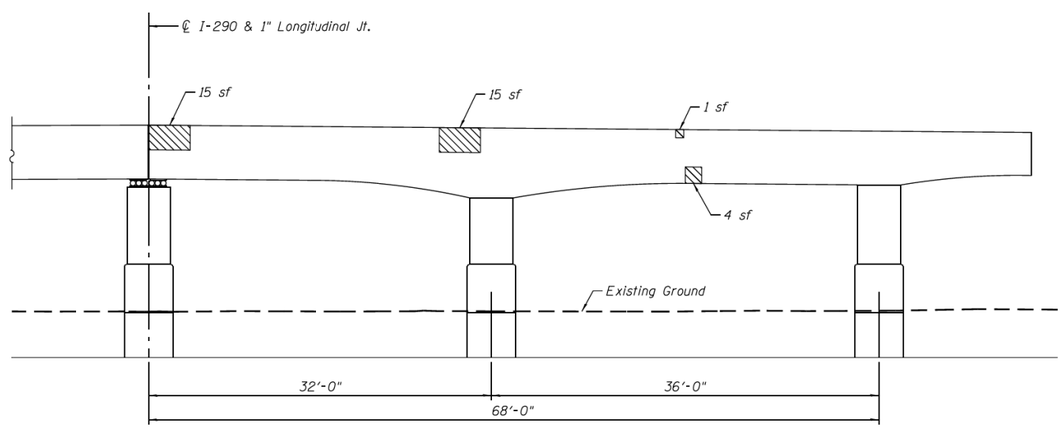

ELEVATION - PIER C5
(Looking West)

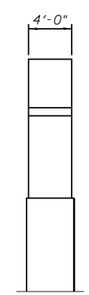

END VIEW

Note:
Area of pier repairs shown are estimated based on inspections performed in July 2012. The Engineer shall record the actual pier repair areas in the "As Built" plans. Changes in repair areas shall not be cause for additional compensation for a change in scope of the work, however, the Contractor will be paid for the quantity furnished at the unit bid price for the work.

LEGEND

Structural Repair of Concrete (Depth equal to or less than 5 Inches)

BILL OF MATERIAL

Item	Unit	Quantity
Structural Repair of Concrete (Depth equal to or less than 5 Inches)	Sq Ft	94

PARSONS BRINCKERHOFF	USER NAME = poteld	DESIGNED - HA	REVISED -	STATE OF ILLINOIS DEPARTMENT OF TRANSPORTATION	PIER C5 REPAIR STRUCTURE NO. 016-0461	F.A.I. RTE.	SECTION	COUNTY	TOTAL SHEETS / SHEET NO.
		CHECKED - PJL	REVISED -			90/94/290	2014-004 R&B (WB)	COOK	706 / 398
	PLOT SCALE = N.T.S.	DRAWN - DE	REVISED -					CONTRACT NO. 60X78	
	PLOT DATE = 3/23/2016	CHECKED - JIG	REVISED -		SHEET NO. S2-121 OF S2-145 SHEETS		ILLINOIS	FED. AID PROJECT	

HBM ENGINEERING GROUP, LLC	USER NAME = ahmad.issa	DESIGNED -	REVISED -	STATE OF ILLINOIS DEPARTMENT OF TRANSPORTATION	EXISTING RECORD DRAWINGS	F.A.I. RTE.	SECTION	COUNTY	TOTAL SHEETS / SHEET NO.
		CHECKED -	REVISED -			90/94/290	2014-013R&B-R	COOK	1972 / 1763
	PLOT SCALE = N.T.S	DRAWN -	REVISED -					CONTRACT NO. 60X93	
	PLOT DATE = 7/26/2018	CHECKED - MI, MAI	REVISED -				ILLINOIS	FED. AID PROJECT	

FILE NAME: pw:\\617479-PWINT.aecomonline.local:AECOM_DS02_NA\Documents\01 Americas\Transportation\60269938 Circle\Phase_II\000_CAD\008_Structural\Structure_016-1718\Existing Plans\33906-60X93-SXX-Existing186

0160461-60X78-S121-PRR.dgn

2:25:33 PM

FOR INFORMATION ONLY

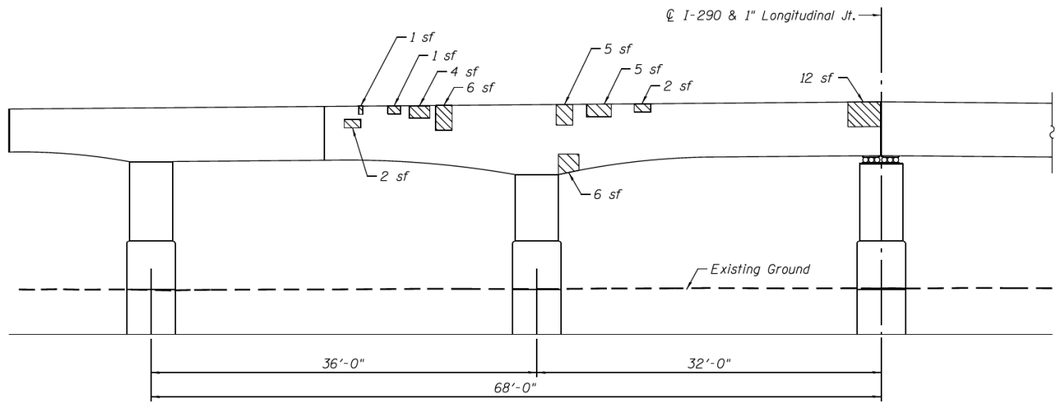

ELEVATION - PIER C6
(Looking East)

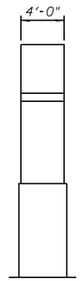

END VIEW

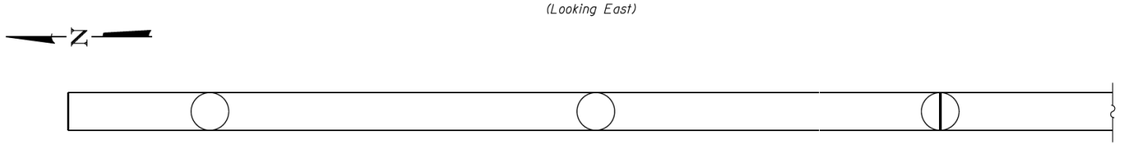

UNDERSIDE PLAN

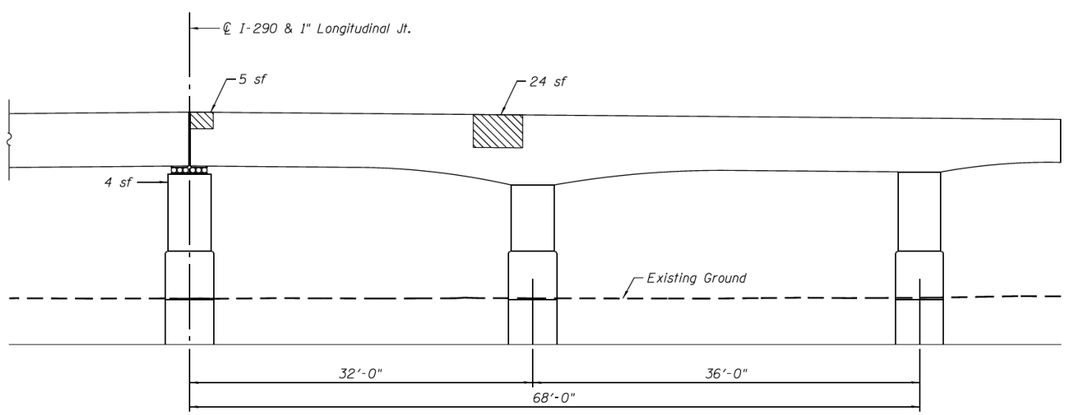

ELEVATION - PIER C6
(Looking West)

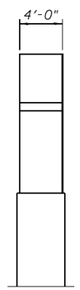

END VIEW

Note:
Area of pier repairs shown are estimated based on inspections performed in July 2012. The Engineer shall record the actual pier repair areas in the "As Built" plans. Changes in repair areas shall not be cause for additional compensation for a change in scope of the work, however, the Contractor will be paid for the quantity furnished at the unit bid price for the work.

LEGEND

Structural Repair of Concrete (Depth equal to or less than 5 Inches)

BILL OF MATERIAL

Item	Unit	Quantity
Structural Repair of Concrete (Depth equal to or less than 5 Inches)	Sq Ft	73

PARSONS BRINCKERHOFF	USER NAME = poteld	DESIGNED - HA	REVISED -	STATE OF ILLINOIS DEPARTMENT OF TRANSPORTATION	PIER C6 REPAIR STRUCTURE NO. 016-0461	F.A.I. RTE.	SECTION	COUNTY	TOTAL SHEETS / SHEET NO.
		CHECKED - PJL	REVISED -			90/94/290	2014-004 R&B (WB)	COOK	706 / 399
	PLOT SCALE = N.T.S.	DRAWN - DE	REVISED -					CONTRACT NO. 60X78	
	PLOT DATE = 3/23/2016	CHECKED - JIG	REVISED -		SHEET NO. S2-122 OF S2-145 SHEETS		ILLINOIS FED. AID PROJECT		

HBM ENGINEERING GROUP, LLC	USER NAME = ahmad.issa	DESIGNED -	REVISED -	STATE OF ILLINOIS DEPARTMENT OF TRANSPORTATION	EXISTING RECORD DRAWINGS	F.A.I. RTE.	SECTION	COUNTY	TOTAL SHEETS / SHEET NO.
		CHECKED -	REVISED -			90/94/290	2014-013R&B-R	COOK	1972 / 1764
	PLOT SCALE = N.T.S	DRAWN -	REVISED -					CONTRACT NO. 60X93	
	PLOT DATE = 7/26/2018	CHECKED - MI, MAI	REVISED -				ILLINOIS FED. AID PROJECT		

FILE NAME: pw:\\617479-PWINT.aecomonline.local:AECOM_DS02_NA\Documents\01 Americas\Transportation\60269938 Circle\Phase_II\000_CAD\008_Structural\Structure_016-1718\Existing Plans\33906-60X93-SXX-Existing187

0160461-60X78-S122-PRR.dgn

2:25:40 PM

FOR INFORMATION ONLY

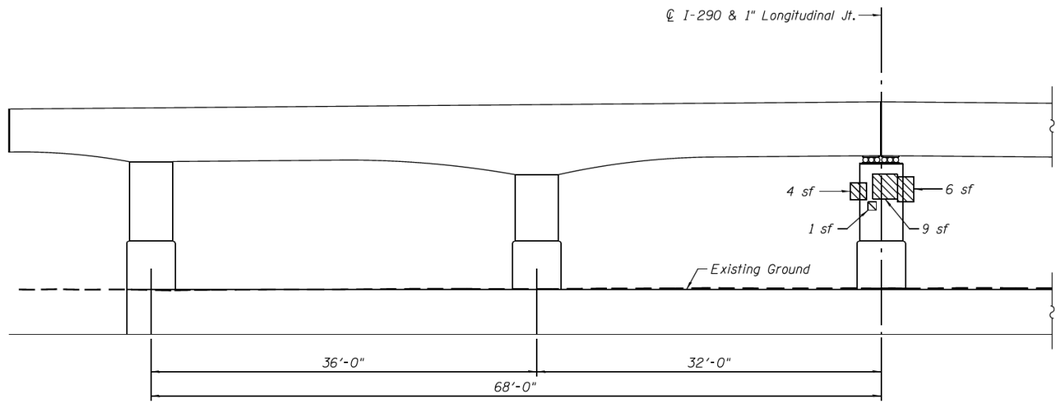

ELEVATION - PIER C7
(Looking East)

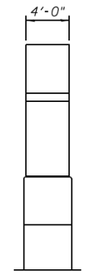

END VIEW

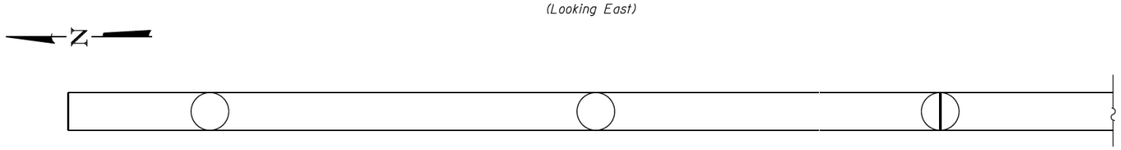

UNDERSIDE PLAN

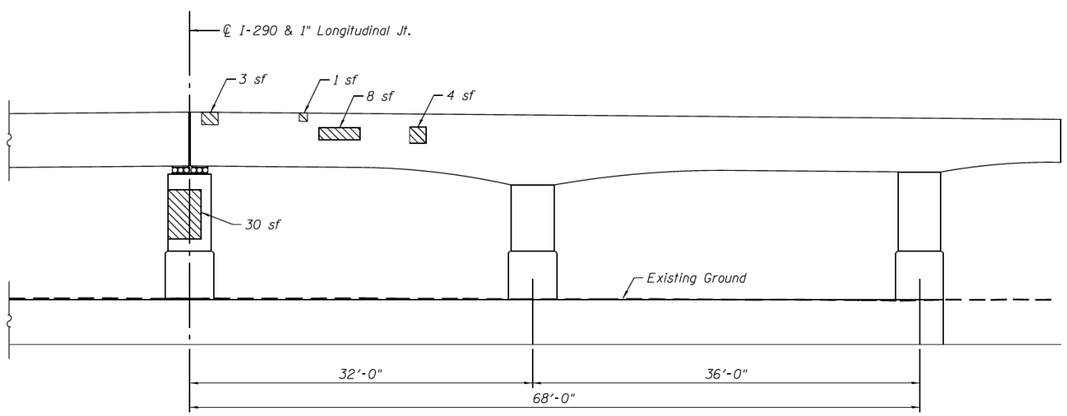

PIER C7 - ELEVATION
(Looking West)

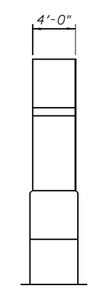

END VIEW

Note:
Area of pier repairs shown are estimated based on inspections performed in July 2012. The Engineer shall record the actual pier repair areas in the "As Built" plans. Changes in repair areas shall not be cause for additional compensation for a change in scope of the work, however, the Contractor will be paid for the quantity furnished at the unit bid price for the work.

LEGEND

Structural Repair of Concrete (Depth equal to or less than 5 Inches)

BILL OF MATERIAL

Item	Unit	Quantity
Structural Repair of Concrete (Depth equal to or less than 5 Inches)	Sq Ft	66

PARSONS BRINCKERHOFF	USER NAME = poteld	DESIGNED - HA	REVISED -	STATE OF ILLINOIS DEPARTMENT OF TRANSPORTATION	PIER C7 REPAIR STRUCTURE NO. 016-0461	F.A.I. RTE.	SECTION	COUNTY	TOTAL SHEETS / SHEET NO.
		CHECKED - PJL	REVISED -			90/94/290	2014-004 R&B (WB)	COOK	706 / 400
	PLOT SCALE = N.T.S.	DRAWN - DE	REVISED -					CONTRACT NO. 60X78	
	PLOT DATE = 3/23/2016	CHECKED - JIG	REVISED -		SHEET NO. S2-123 OF S2-145 SHEETS		ILLINOIS FED. AID PROJECT		

HBM ENGINEERING GROUP, LLC	USER NAME = ahmad.issa	DESIGNED -	REVISED -	STATE OF ILLINOIS DEPARTMENT OF TRANSPORTATION	EXISTING RECORD DRAWINGS	F.A.I. RTE.	SECTION	COUNTY	TOTAL SHEETS / SHEET NO.
		CHECKED -	REVISED -			90/94/290	2014-013R&B-R	COOK	1972 / 1765
	PLOT SCALE = N.T.S	DRAWN -	REVISED -					CONTRACT NO. 60X93	
	PLOT DATE = 7/26/2018	CHECKED - MI, MAI	REVISED -				ILLINOIS FED. AID PROJECT		

FILE NAME: pw:\\617479-PWINT.aecomonline.local:AECOM_DS02_NA\Documents\01 Americas\Transportation\60269938 Circle\Phase_II\000_CAD\008_Structural\Structure_016-1718\Existing Plans\33906-60X93-SXX-Existing188

0160461-60X78-S123-PRR.dgn

2:25:48 PM

FOR INFORMATION ONLY

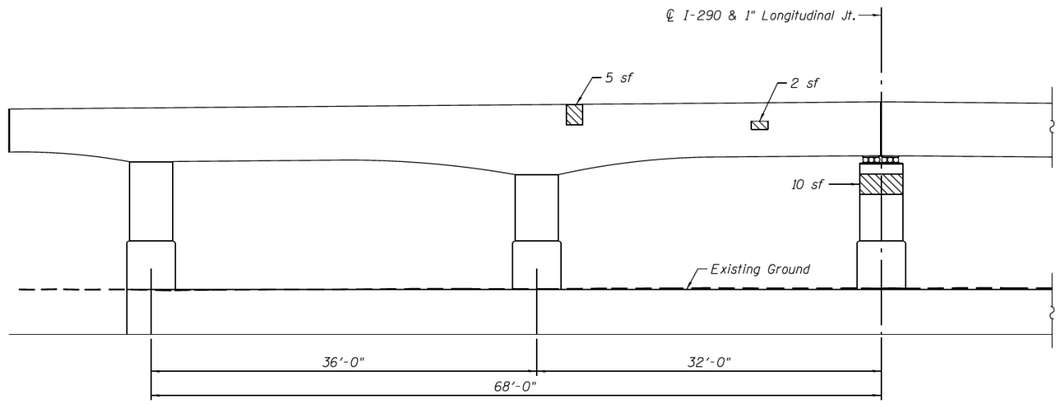

ELEVATION - PIER C8
(Looking East)

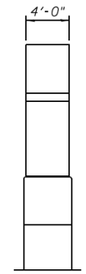

END VIEW

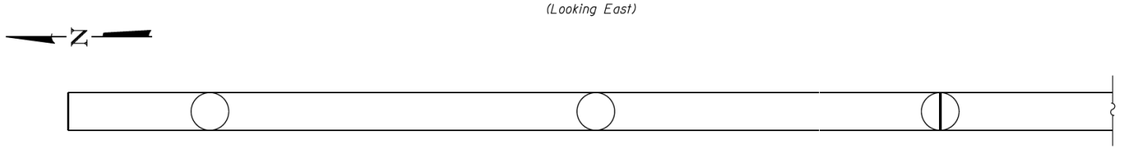

UNDERSIDE PLAN

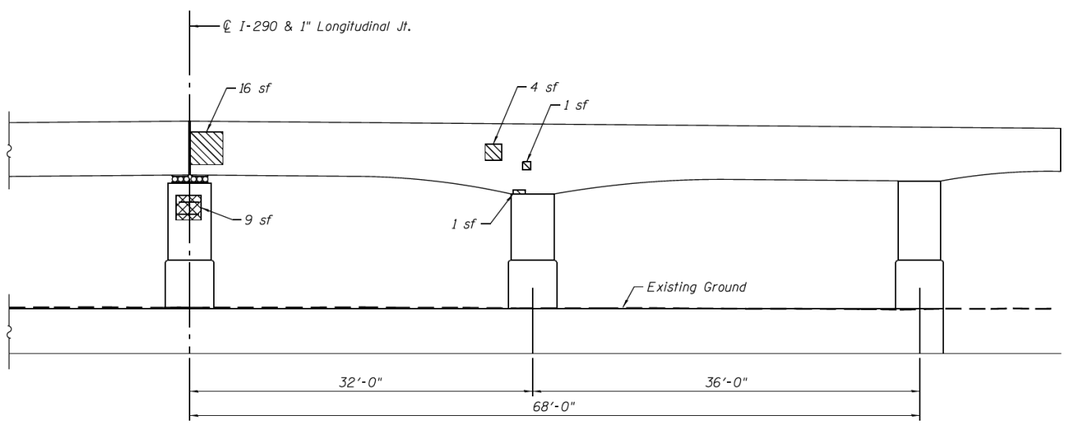

ELEVATION - PIER C8
(Looking West)

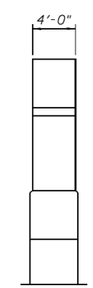

END VIEW

Note:
Area of pier repairs shown are estimated based on inspections performed in July 2012. The Engineer shall record the actual pier repair areas in the "As Built" plans. Changes in repair areas shall not be cause for additional compensation for a change in scope of the work, however, the Contractor will be paid for the quantity furnished at the unit bid price for the work.

LEGEND

Structural Repair of Concrete (Depth equal to or less than 5 Inches)

Structural Repair of Concrete (Depth greater than 5 Inches)

BILL OF MATERIAL

Item	Unit	Quantity
Structural Repair of Concrete (Depth equal to or less than 5 Inches)	Sq Ft	39
Structural Repair of Concrete (Depth greater than 5 Inches)	Sq Ft	9

PARSONS BRINCKERHOFF

USER NAME = poteld	DESIGNED - HA	REVISED -	
	CHECKED - PJL	REVISED -	
PLOT SCALE = N.T.S.	DRAWN - DE	REVISED -	
PLOT DATE = 3/23/2016	CHECKED - JIG	REVISED -	

STATE OF ILLINOIS
DEPARTMENT OF TRANSPORTATION

PIER C8 REPAIR
STRUCTURE NO. 016-0461
SHEET NO. S2-124 OF S2-145 SHEETS

F.A.I. RTE.	SECTION	COUNTY	TOTAL SHEETS	SHEET NO.
90/94/290	2014-004 R&B (WB)	COOK	706	401
		CONTRACT NO. 60X78		
		ILLINOIS FED. AID PROJECT		

0160461-60X78-S124-PRR.dgn

HBM ENGINEERING GROUP, LLC

USER NAME = ahmad.issa	DESIGNED -	REVISED -	
	CHECKED -	REVISED -	
PLOT SCALE = N.T.S	DRAWN -	REVISED -	
PLOT DATE = 7/26/2018	CHECKED - MI, MAI	REVISED -	

STATE OF ILLINOIS
DEPARTMENT OF TRANSPORTATION

EXISTING RECORD DRAWINGS

F.A.I. RTE.	SECTION	COUNTY	TOTAL SHEETS	SHEET NO.
90/94/290	2014-013R&B-R	COOK	1972	1766
		CONTRACT NO. 60X93		
		ILLINOIS FED. AID PROJECT		

FILE NAME: pw:\\617479-PWINT.aecomonline.local:AECOM_DS02_NA\Documents\01 Americas\Transportation\60269938 Circle\Phase_II\000_CAD\008_Structural\Structure_016-1718\Existing Plans\33906-60X93-SXX-Existing189

2:25:56 PM

FOR INFORMATION ONLY

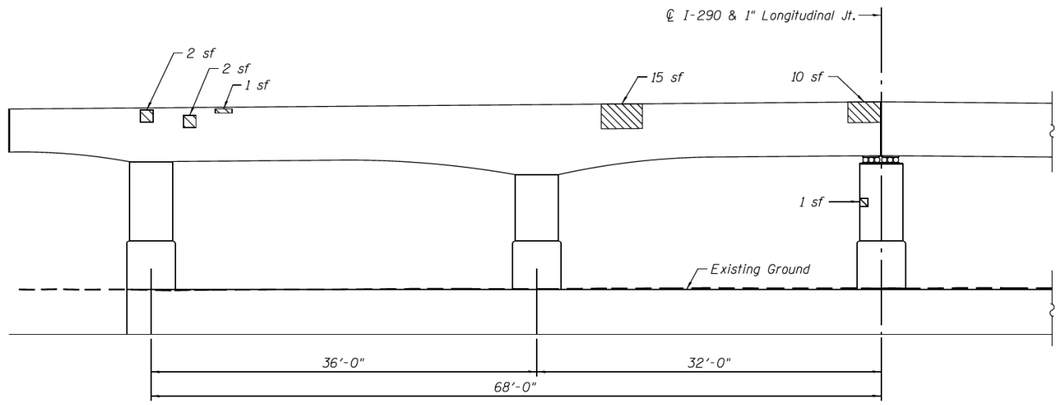

ELEVATION - PIER C10
(Looking East)

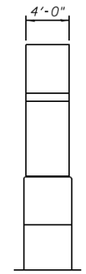

END VIEW

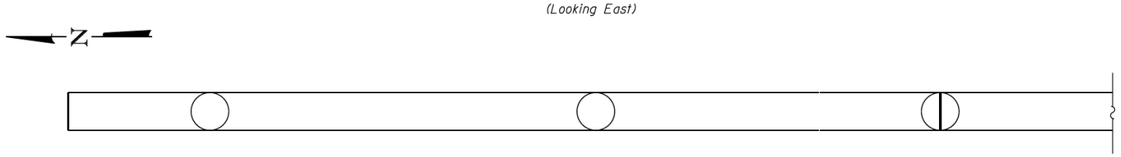

UNDERSIDE PLAN

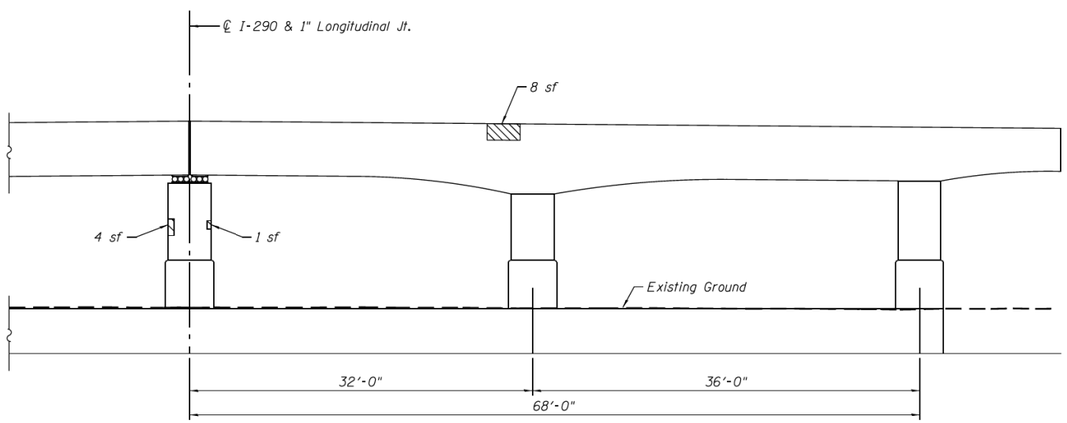

ELEVATION - PIER C10
(Looking West)

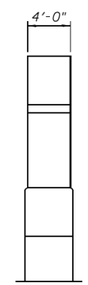

END VIEW

Note:
Area of pier repairs shown are estimated based on inspections performed in July 2012. The Engineer shall record the actual pier repair areas in the "As Built" plans. Changes in repair areas shall not be cause for additional compensation for a change in scope of the work, however, the Contractor will be paid for the quantity furnished at the unit bid price for the work.

LEGEND

Structural Repair of Concrete (Depth equal to or less than 5 Inches)

BILL OF MATERIAL

Item	Unit	Quantity
Structural Repair of Concrete (Depth equal to or less than 5 Inches)	Sq Ft	44

PARSONS BRINCKERHOFF	USER NAME = poteld	DESIGNED - HA	REVISED -	STATE OF ILLINOIS DEPARTMENT OF TRANSPORTATION	PIER C10 REPAIR STRUCTURE NO. 016-0461	F.A.I. RTE.	SECTION	COUNTY	TOTAL SHEETS / SHEET NO.
		CHECKED - PJL	REVISED -			90/94/290	2014-004 R&B (WB)	COOK	706 / 402
	PLOT SCALE = N.T.S.	DRAWN - DE	REVISED -					CONTRACT NO. 60X78	
	PLOT DATE = 3/23/2016	CHECKED - JIG	REVISED -		SHEET NO. S2-125 OF S2-145 SHEETS		ILLINOIS FED. AID PROJECT		

HBM ENGINEERING GROUP, LLC	USER NAME = ahmad.issa	DESIGNED -	REVISED -	STATE OF ILLINOIS DEPARTMENT OF TRANSPORTATION	EXISTING RECORD DRAWINGS	F.A.I. RTE.	SECTION	COUNTY	TOTAL SHEETS / SHEET NO.
		CHECKED -	REVISED -			90/94/290	2014-013R&B-R	COOK	1972 / 1767
	PLOT SCALE = N.T.S	DRAWN -	REVISED -					CONTRACT NO. 60X93	
	PLOT DATE = 7/26/2018	CHECKED - MI, MAI	REVISED -				ILLINOIS FED. AID PROJECT		

FILE NAME: pw:\\617479-PWINT.aecomonline.local:AECOM_DS02_NA\Documents\01 Americas\Transportation\60269938 Circle\Phase_II\000_CAD\008_Structural\Structure_016-1718\Existing Plans\33906-60X93-SXX-Existing190

0160461-60X78-S125-PRR.dgn

2:26:03 PM

FOR INFORMATION ONLY

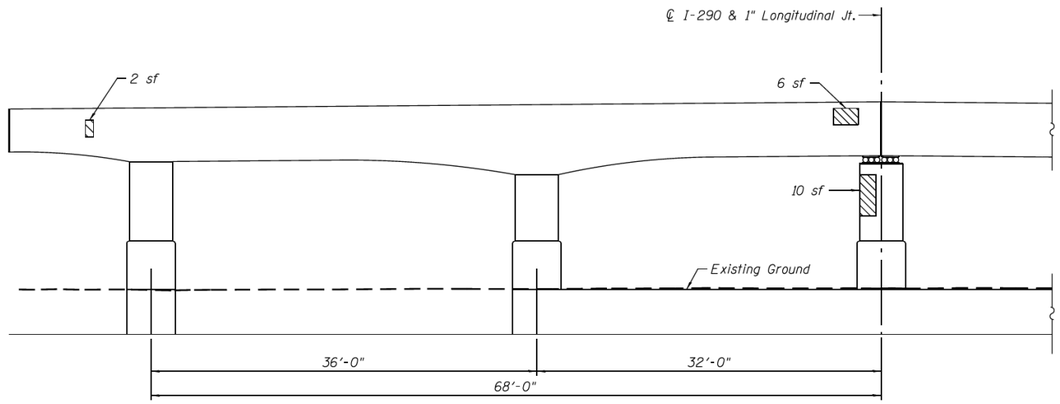

ELEVATION - PIER C11
(Looking East)

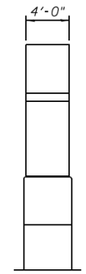

END VIEW

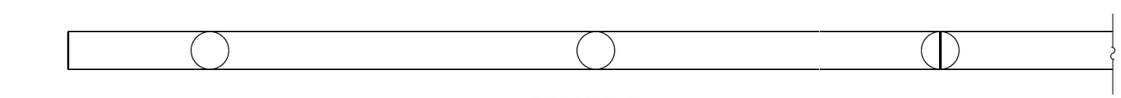

UNDERSIDE PLAN

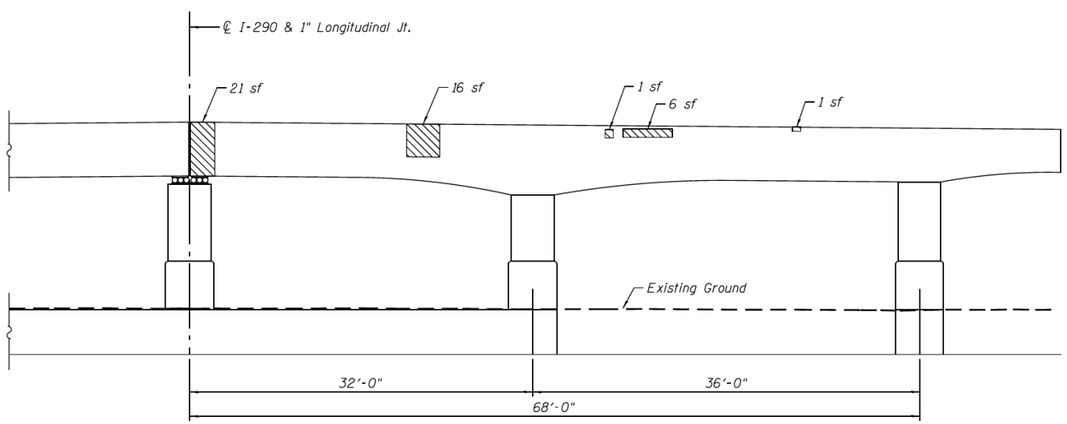

ELEVATION - PIER C11
(Looking West)

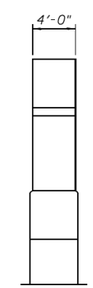

END VIEW

Note:
Area of pier repairs shown are estimated based on inspections performed in July 2012. The Engineer shall record the actual pier repair areas in the "As Built" plans. Changes in repair areas shall not be cause for additional compensation for a change in scope of the work, however, the Contractor will be paid for the quantity furnished at the unit bid price for the work.

LEGEND

Structural Repair of Concrete (Depth equal to or less than 5 Inches)

BILL OF MATERIAL

Item	Unit	Quantity
Structural Repair of Concrete (Depth equal to or less than 5 Inches)	Sq Ft	63

PARSONS BRINCKERHOFF	USER NAME = poteld	DESIGNED - HA	REVISED -	STATE OF ILLINOIS DEPARTMENT OF TRANSPORTATION	PIER C11 REPAIR STRUCTURE NO. 016-0461	F.A.I. RTE.	SECTION	COUNTY	TOTAL SHEETS / SHEET NO.
		CHECKED - PJL	REVISED -			90/94/290	2014-004 R&B (WB)	COOK	706 / 403
	PLOT SCALE = N.T.S.	DRAWN - DE	REVISED -					CONTRACT NO. 60X78	
	PLOT DATE = 3/23/2016	CHECKED - JIG	REVISED -		SHEET NO. S2-126 OF S2-145 SHEETS		ILLINOIS FED. AID PROJECT		

HBM ENGINEERING GROUP, LLC	USER NAME = ahmad.issa	DESIGNED -	REVISED -	STATE OF ILLINOIS DEPARTMENT OF TRANSPORTATION	EXISTING RECORD DRAWINGS	F.A.I. RTE.	SECTION	COUNTY	TOTAL SHEETS / SHEET NO.
		CHECKED -	REVISED -			90/94/290	2014-013R&B-R	COOK	1972 / 1768
	PLOT SCALE = N.T.S	DRAWN -	REVISED -					CONTRACT NO. 60X93	
	PLOT DATE = 7/26/2018	CHECKED - MI, MAI	REVISED -				ILLINOIS FED. AID PROJECT		

FILE NAME: pw:\\617479-PWINT.aecomonline.local:AECOM_DS02_NA\Documents\01 Americas\Transportation\60269938 Circle\Phase_II\000_CAD\008_Structural\Structure_016-1718\Existing Plans\33906-60X93-SXX-Existing191

0160461-60X78-S126-PRR.dgn

2:26:12 PM

FOR INFORMATION ONLY

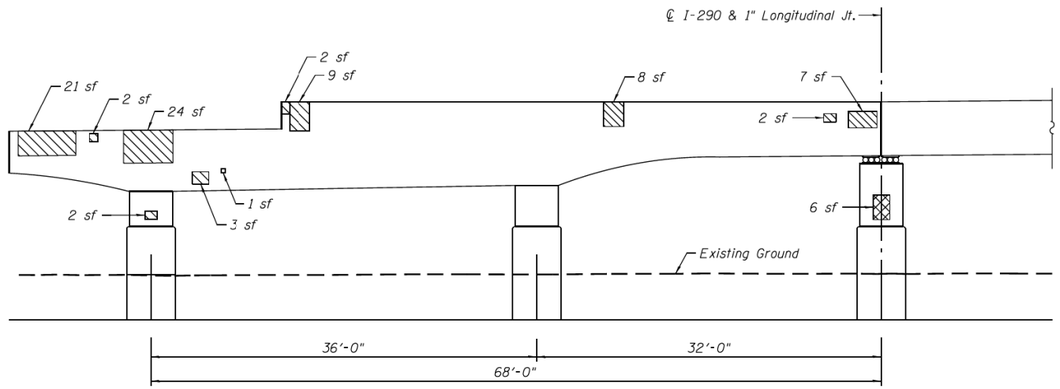

ELEVATION - PIER C13
(Looking East)

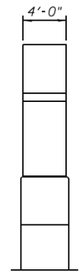

END VIEW

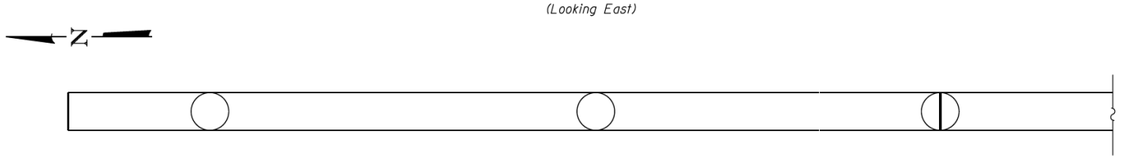

UNDERSIDE PLAN

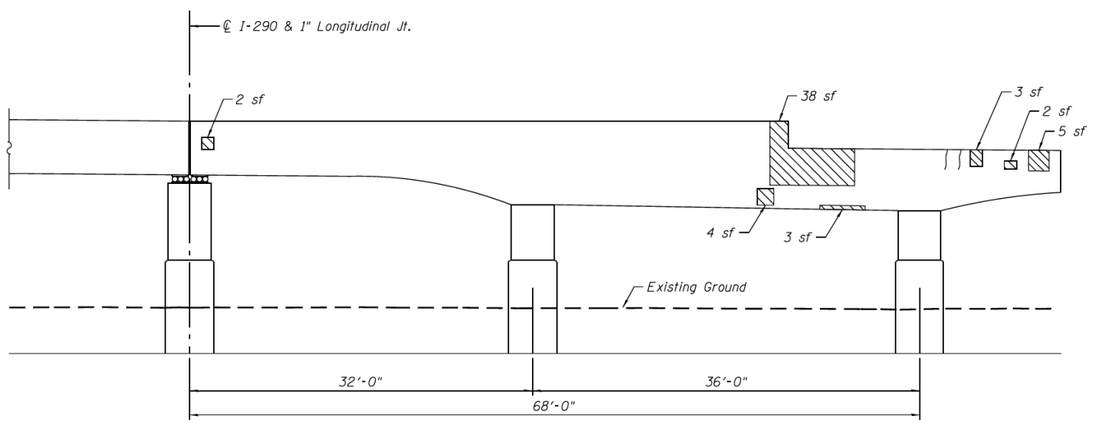

ELEVATION - PIER C13
(Looking West)

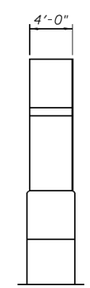

END VIEW

Note:
Area of pier repairs shown are estimated based on inspections performed in July 2012. The Engineer shall record the actual pier repair areas in the "As Built" plans. Changes in repair areas shall not be cause for additional compensation for a change in scope of the work, however, the Contractor will be paid for the quantity furnished at the unit bid price for the work.

LEGEND

Structural Repair of Concrete (Depth equal to or less than 5 Inches)

Structural Repair of Concrete (Depth greater than 5 Inches)

BILL OF MATERIAL

Item	Unit	Quantity
Structural Repair of Concrete (Depth equal to or less than 5 Inches)	Sq Ft	138
Structural Repair of Concrete (Depth greater than 5 Inches)	Sq Ft	6

PARSONS BRINCKERHOFF	USER NAME = poteld	DESIGNED - HA	REVISED -	STATE OF ILLINOIS DEPARTMENT OF TRANSPORTATION	PIER C13 REPAIR STRUCTURE NO. 016-0461	F.A.I. RTE.	SECTION	COUNTY	TOTAL SHEETS / SHEET NO.
		CHECKED - PJL	REVISED -			90/94/290	2014-004 R&B (WB)	COOK	706 / 404
	PLOT SCALE = N.T.S.	DRAWN - DE	REVISED -					CONTRACT NO. 60X78	
	PLOT DATE = 3/23/2016	CHECKED - JIG	REVISED -		SHEET NO. S2-127 OF S2-145 SHEETS		ILLINOIS FED. AID PROJECT		

HBM ENGINEERING GROUP, LLC	USER NAME = ahmad.issa	DESIGNED -	REVISED -	STATE OF ILLINOIS DEPARTMENT OF TRANSPORTATION	EXISTING RECORD DRAWINGS	F.A.I. RTE.	SECTION	COUNTY	TOTAL SHEETS / SHEET NO.
		CHECKED -	REVISED -			90/94/290	2014-013R&B-R	COOK	1972 / 1769
	PLOT SCALE = N.T.S	DRAWN -	REVISED -					CONTRACT NO. 60X93	
	PLOT DATE = 7/26/2018	CHECKED - MI, MAI	REVISED -				ILLINOIS FED. AID PROJECT		

FILE NAME: pw:\\617479-PWINT.aecomonline.local:AECOM_DS02_NA\Documents\01 Americas\Transportation\60269938 Circle\Phase_II\000_CAD\008_Structural\Structure_016-1718\Existing Plans\33906-60X93-SXX-Existing192

0160461-60X78-S127-PRR.dgn

2:26:21 PM

FOR INFORMATION ONLY

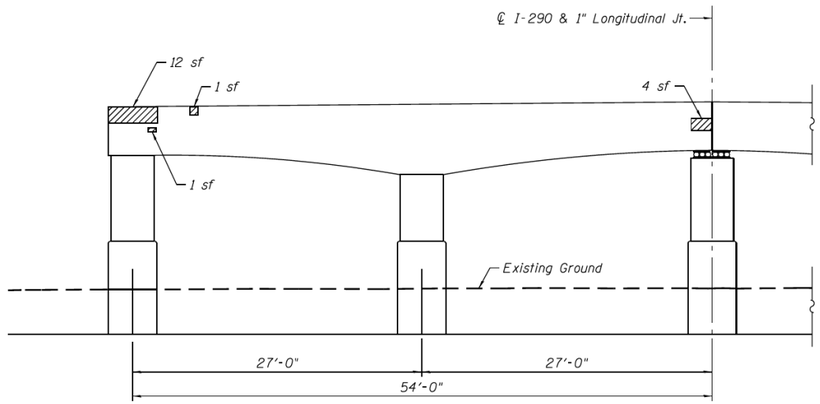

ELEVATION - PIER C14
(Looking East)

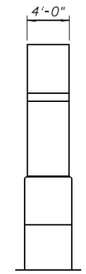

END VIEW

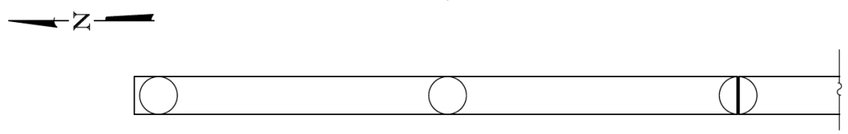

UNDERSIDE PLAN

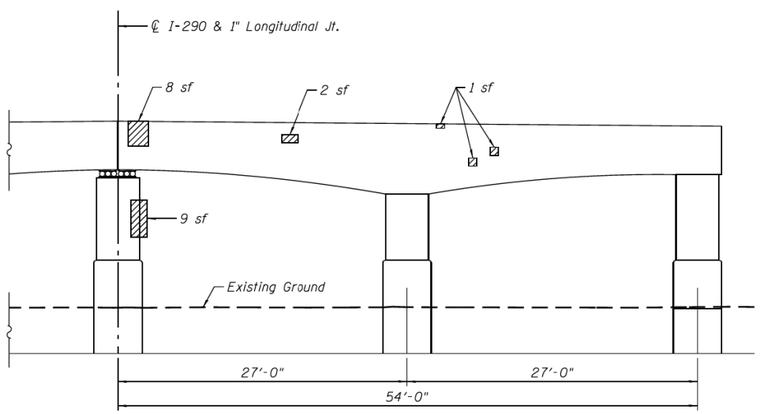

ELEVATION - PIER C14
(Looking West)

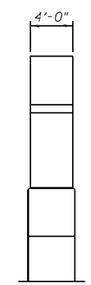

END VIEW

Note:
Area of pier repairs shown are estimated based on inspections performed in July 2012. The Engineer shall record the actual pier repair areas in the "As Built" plans. Changes in repair areas shall not be cause for additional compensation for a change in scope of the work, however, the Contractor will be paid for the quantity furnished at the unit bid price for the work.

LEGEND

Structural Repair of Concrete (Depth equal to or less than 5 Inches)

BILL OF MATERIAL

Item	Unit	Quantity
Structural Repair of Concrete (Depth equal to or less than 5 Inches)	Sq Ft	40

PARSONS BRINCKERHOFF	USER NAME = poteld	DESIGNED - HA	REVISED -	STATE OF ILLINOIS DEPARTMENT OF TRANSPORTATION	PIER C14 REPAIR STRUCTURE NO. 016-0461	F.A.I. RTE.	SECTION	COUNTY	TOTAL SHEETS / SHEET NO.
		CHECKED - PJL	REVISED -			90/94/290	2014-004 R&B (WB)	COOK	706 / 405
	PLOT SCALE = N.T.S.	DRAWN - DE	REVISED -					CONTRACT NO. 60X78	
	PLOT DATE = 3/23/2016	CHECKED - JIG	REVISED -		SHEET NO. S2-128 OF S2-145 SHEETS		ILLINOIS FED. AID PROJECT		

HBM ENGINEERING GROUP, LLC	USER NAME = ahmad.issa	DESIGNED -	REVISED -	STATE OF ILLINOIS DEPARTMENT OF TRANSPORTATION	EXISTING RECORD DRAWINGS	F.A.I. RTE.	SECTION	COUNTY	TOTAL SHEETS / SHEET NO.
		CHECKED -	REVISED -			90/94/290	2014-013R&B-R	COOK	1972 / 1770
	PLOT SCALE = N.T.S	DRAWN -	REVISED -					CONTRACT NO. 60X93	
	PLOT DATE = 7/26/2018	CHECKED - MI, MAI	REVISED -				ILLINOIS FED. AID PROJECT		

FILE NAME: pw:\\617479-PWINT.aecomonline.local:AECOM_DS02_NA\Documents\01 Americas\Transportation\60269938 Circle\Phase_II\000_CAD\008_Structural\Structure_016-1718\Existing Plans\33906-60X93-SXX-Existing193

0160461-60X78-S128-PRR.dgn

2:26:28 PM

FOR INFORMATION ONLY

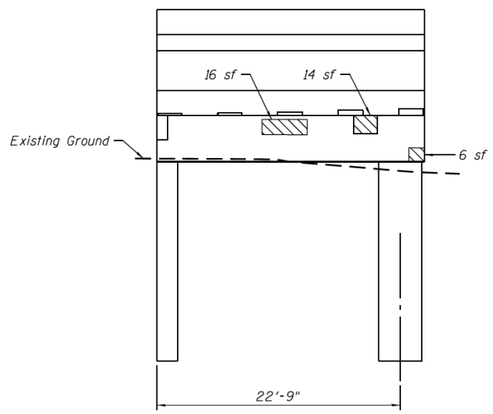

ELEVATION - PIER 14N NORTH RAMP
(Looking East)

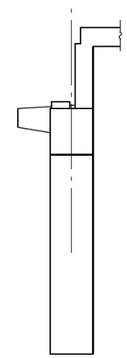

END VIEW

Note:
Area of pier repairs shown are estimated based on inspections performed in July 2012. The Engineer shall record the actual pier repair areas in the "As Built" plans. Changes in repair areas shall not be cause for additional compensation for a change in scope of the work, however, the Contractor will be paid for the quantity furnished at the unit bid price for the work.

LEGEND

Structural Repair of Concrete
(Depth equal to or less than 5 Inches)

BILL OF MATERIAL

Item	Unit	Quantity
Structural Repair of Concrete (Depth equal to or less than 5 Inches)	Sq Ft	36

PARSONS BRINCKERHOFF

USER NAME = poteld	DESIGNED - HA	REVISED -	
	CHECKED - PJL	REVISED -	
PLOT SCALE = N.T.S.	DRAWN - DE	REVISED -	
PLOT DATE = 3/23/2016	CHECKED - JIG	REVISED -	

STATE OF ILLINOIS
DEPARTMENT OF TRANSPORTATION

PIER 14N REPAIR
STRUCTURE NO. 016-0461

SHEET NO. S2-129 OF S2-145 SHEETS

F.A.I. RTE.	SECTION	COUNTY	TOTAL SHEETS	SHEET NO.
90/94/290	2014-004 R&B (WB)	COOK	706	406
		CONTRACT NO. 60X78		
		ILLINOIS FED. AID PROJECT		

HBM ENGINEERING GROUP, LLC

USER NAME = ahmad.issa	DESIGNED -	REVISED -	
	CHECKED -	REVISED -	
PLOT SCALE = N.T.S	DRAWN -	REVISED -	
PLOT DATE = 7/26/2018	CHECKED - MI, MAI	REVISED -	

STATE OF ILLINOIS
DEPARTMENT OF TRANSPORTATION

EXISTING RECORD DRAWINGS

F.A.I. RTE.	SECTION	COUNTY	TOTAL SHEETS	SHEET NO.
90/94/290	2014-013R&B-R	COOK	1972	1771
		CONTRACT NO. 60X93		
		ILLINOIS FED. AID PROJECT		

FILE NAME: pw:\\617479-PWINT.aecomonline.local:AECOM_DS02_NA\Documents\01 Americas\Transportation\60269938 Circle\Phase_II\000_CAD\008_Structural\Structure_016-1718\Existing Plans\33906-60X93-SXX-Existing194

0160461-60X78-S129-PRR.dgn

2:26:36 PM

FOR INFORMATION ONLY

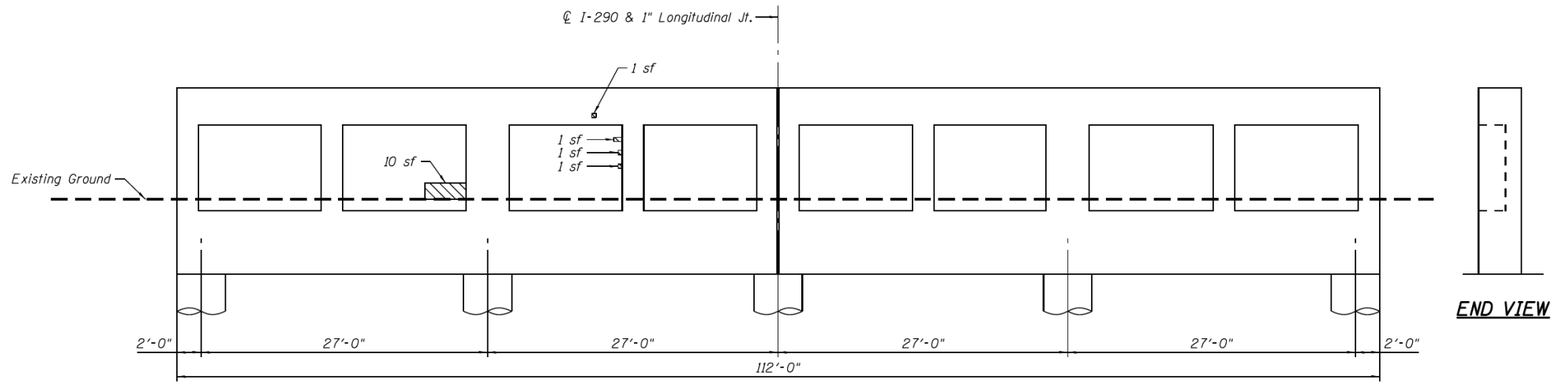

ELEVATION - PIER C15
(Looking East)

END VIEW

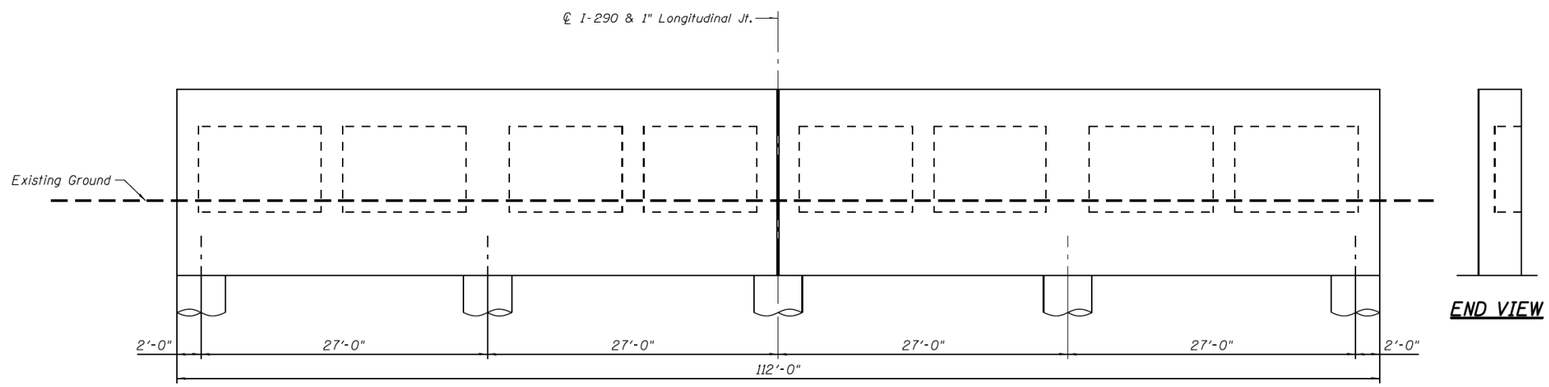

ELEVATION - PIER C15
(Looking West)

END VIEW

Note:
Area of pier repairs shown are estimated based on inspections performed in July 2012. The Engineer shall record the actual pier repair areas in the "As Built" plans. Changes in repair areas shall not be cause for additional compensation for a change in scope of the work, however, the Contractor will be paid for the quantity furnished at the unit bid price for the work.

LEGEND

Structural Repair of Concrete (Depth equal to or less than 5 Inches)

BILL OF MATERIAL

Item	Unit	Quantity
Structural Repair of Concrete (Depth equal to or less than 5 Inches)	Sq Ft	14

PARSONS BRINCKERHOFF	USER NAME = pateld	DESIGNED - HA	REVISED -	STATE OF ILLINOIS DEPARTMENT OF TRANSPORTATION	PIER C15 REPAIR STRUCTURE NO. 016-0461	F.A.I. RTE.	SECTION	COUNTY	TOTAL SHEETS / SHEET NO.
		CHECKED - PJL	REVISED -			90/94/290	2014-004 R&B (WB)	COOK	706 / 407
	PLOT SCALE = N.T.S.	DRAWN - DE	REVISED -					CONTRACT NO. 60X78	
	PLOT DATE = 3/23/2016	CHECKED - JIG	REVISED -		SHEET NO. S2-130 OF S2-145 SHEETS		ILLINOIS FED. AID PROJECT		

HBM ENGINEERING GROUP, LLC	USER NAME = ahmad.issa	DESIGNED -	REVISED -	STATE OF ILLINOIS DEPARTMENT OF TRANSPORTATION	EXISTING RECORD DRAWINGS	F.A.I. RTE.	SECTION	COUNTY	TOTAL SHEETS / SHEET NO.
		CHECKED -	REVISED -			90/94/290	2014-013R&B-R	COOK	1972 / 1772
	PLOT SCALE = N.T.S	DRAWN -	REVISED -					CONTRACT NO. 60X93	
	PLOT DATE = 7/26/2018	CHECKED - MI, MAI	REVISED -				ILLINOIS FED. AID PROJECT		

0160461-60X78-S130-PRR.dgn

FILE NAME: pw:\\617479-PWINT.aecomonline.local:AECOM_DS02_NA\Documents\01 Americas\Transportation\60269938 Circle\Phase_II\000_CAD\008_Structural\Structure_016-1718\Existing Plans\33906-60X93-SXX-Existing195

2:26:43 PM

FOR INFORMATION ONLY

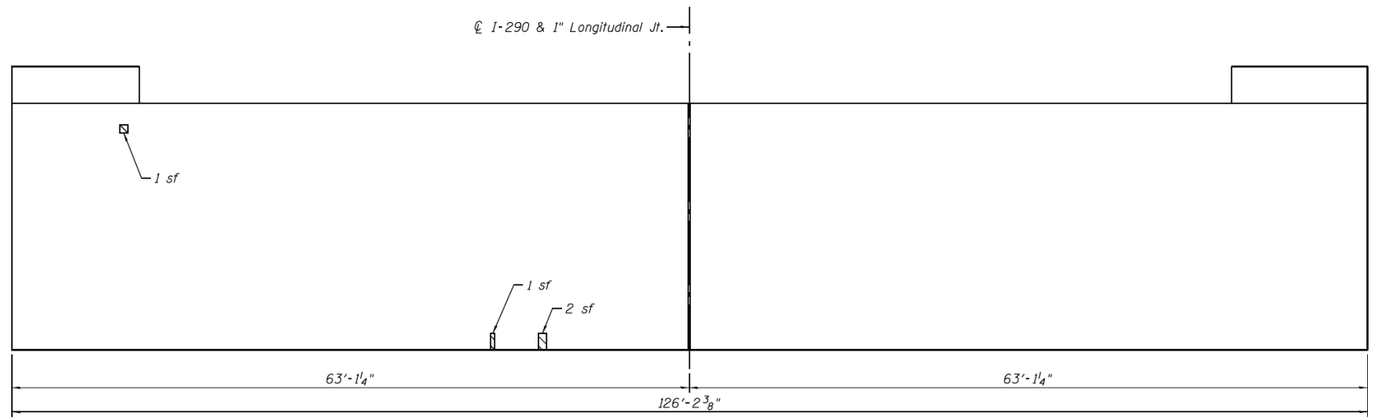

ELEVATION - PIER C16
(Looking East)

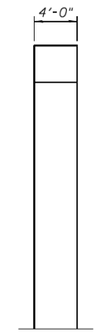

END VIEW

Note:
Area of pier repairs shown are estimated based on inspections performed in July 2012. The Engineer shall record the actual pier repair areas in the "As Built" plans. Changes in repair areas shall not be cause for additional compensation for a change in scope of the work, however, the Contractor will be paid for the quantity furnished at the unit bid price for the work.

LEGEND

Structural Repair of Concrete
(Depth equal to or less than 5 Inches)

BILL OF MATERIAL

Item	Unit	Quantity
Structural Repair of Concrete (Depth equal to or less than 5 Inches)	Sq Ft	4

PARSONS BRINCKERHOFF	USER NAME = poteld	DESIGNED - HA	REVISED -
		CHECKED - PJL	REVISED -
	PLOT SCALE = N.T.S.	DRAWN - DE	REVISED -
	PLOT DATE = 3/23/2016	CHECKED - JIG	REVISED -

STATE OF ILLINOIS
DEPARTMENT OF TRANSPORTATION

PIER C16 REPAIR
STRUCTURE NO. 016-0461
SHEET NO. S2-131 OF S2-145 SHEETS

F.A.I. RTE.	SECTION	COUNTY	TOTAL SHEETS	SHEET NO.
90/94/290	2014-004 R&B (WB)	COOK	706	408
		CONTRACT NO. 60X78		
		ILLINOIS FED. AID PROJECT		

0160461-60X78-S131-PRR.dgn

HBM ENGINEERING GROUP, LLC	USER NAME = ahmad.issa	DESIGNED -	REVISED -
		CHECKED -	REVISED -
	PLOT SCALE = N.T.S	DRAWN -	REVISED -
	PLOT DATE = 7/26/2018	CHECKED - MI, MAI	REVISED -

STATE OF ILLINOIS
DEPARTMENT OF TRANSPORTATION

EXISTING RECORD DRAWINGS

F.A.I. RTE.	SECTION	COUNTY	TOTAL SHEETS	SHEET NO.
90/94/290	2014-013R&B-R	COOK	1972	1773
		CONTRACT NO. 60X93		
		ILLINOIS FED. AID PROJECT		

FILE NAME: pw:\\617479-PWINT.aecomonline.local:AECOM_DS02_NA\Documents\01 Americas\Transportation\60269938 Circle\Phase_II\000_CAD\008_Structural\Structure_016-1718\Existing Plans\33906-60X93-SXX-Existing196

2:26:51 PM

FOR INFORMATION ONLY

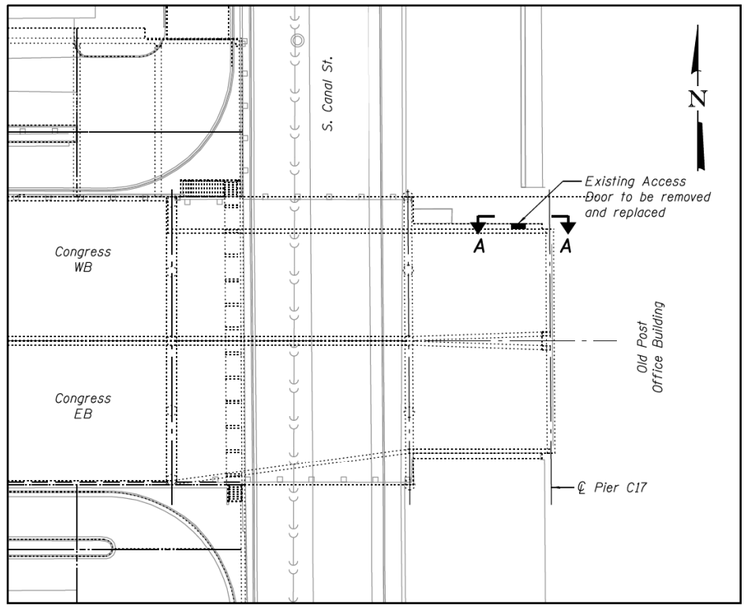

KEY PLAN

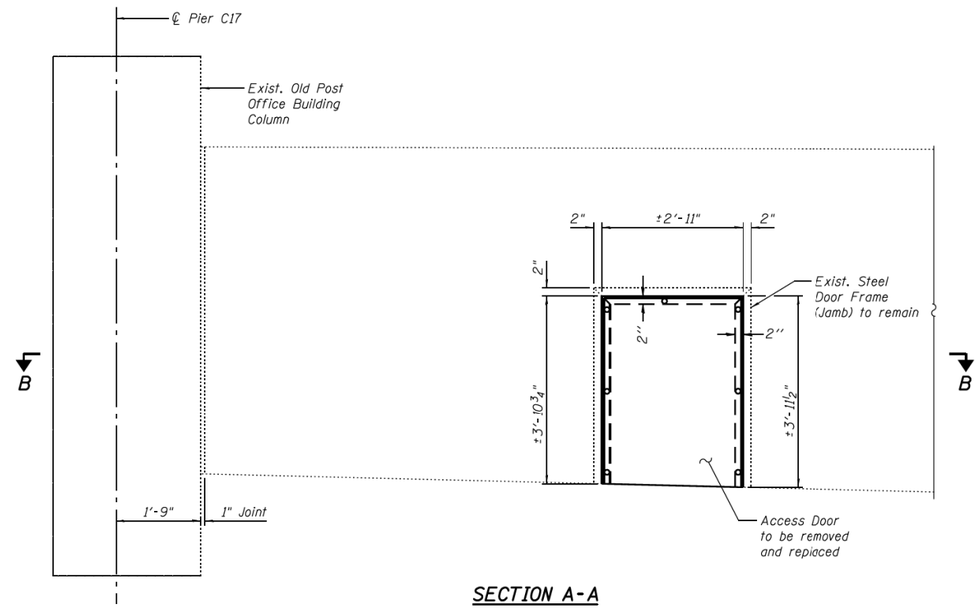

SECTION A-A
NORTH ENCLOSURE WALL & ACCESS DOOR
(Looking South)

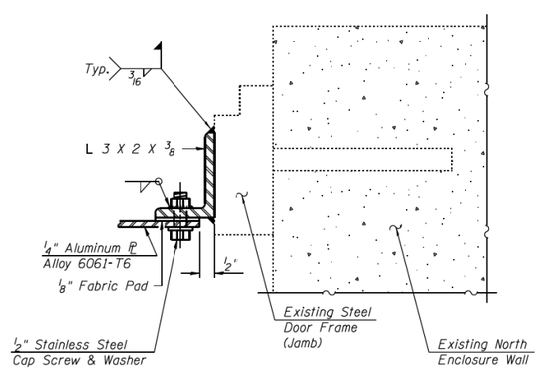

DETAIL C
Cost of door and frame are included with Access Door.

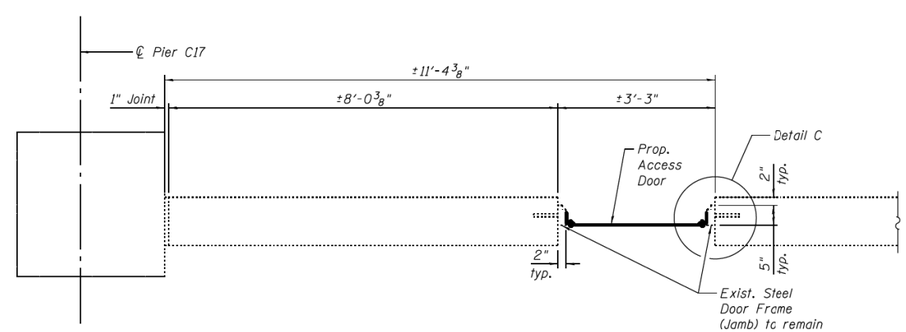

SECTION B-B

BILL OF MATERIAL

Item	Unit	Total
Access Door	Each	1

0160461-60X78-S132-DRI.dgn

PARSONS BRINCKERHOFF	USER NAME = poteld	DESIGNED - HA	REVISED -	STATE OF ILLINOIS DEPARTMENT OF TRANSPORTATION	DOOR REPAIR – NORTH ENCLOSURE WALL STRUCTURE NO. 016–0461	F.A.I. RTE.	SECTION	COUNTY	TOTAL SHEETS	SHEET NO.
		CHECKED - PJL	REVISED -			90/94/290	2014-004 R&B (WB)	COOK	706	409
	PLOT SCALE = N.T.S.	DRAWN - DE	REVISED -					CONTRACT NO. 60X78		
	PLOT DATE = 3/23/2016	CHECKED - JIG	REVISED -		SHEET NO. S2-132 OF S2-145 SHEETS		ILLINOIS FED. AID PROJECT			

HBM ENGINEERING GROUP, LLC	USER NAME = ahmad.issa	DESIGNED -	REVISED -	STATE OF ILLINOIS DEPARTMENT OF TRANSPORTATION	EXISTING RECORD DRAWINGS	F.A.I. RTE.	SECTION	COUNTY	TOTAL SHEETS	SHEET NO.
		CHECKED -	REVISED -			90/94/290	2014-013R&B-R	COOK	1972	1774
	PLOT SCALE = N.T.S	DRAWN -	REVISED -					CONTRACT NO. 60X93		
	PLOT DATE = 7/26/2018	CHECKED - MI, MAI	REVISED -				ILLINOIS	FED. AID PROJECT		

FILE NAME: pw:\\617479-PWINT.aecomonline.local:AECOM_DS02_NA\Documents\01 Americas\Transportation\60269938 Circle\Phase_II\000_CAD\008_Structural\Structure_016-1718\Existing Plans\33906-60X93-SXX-Existing197

2:26:58 PM

FOR INFORMATION ONLY

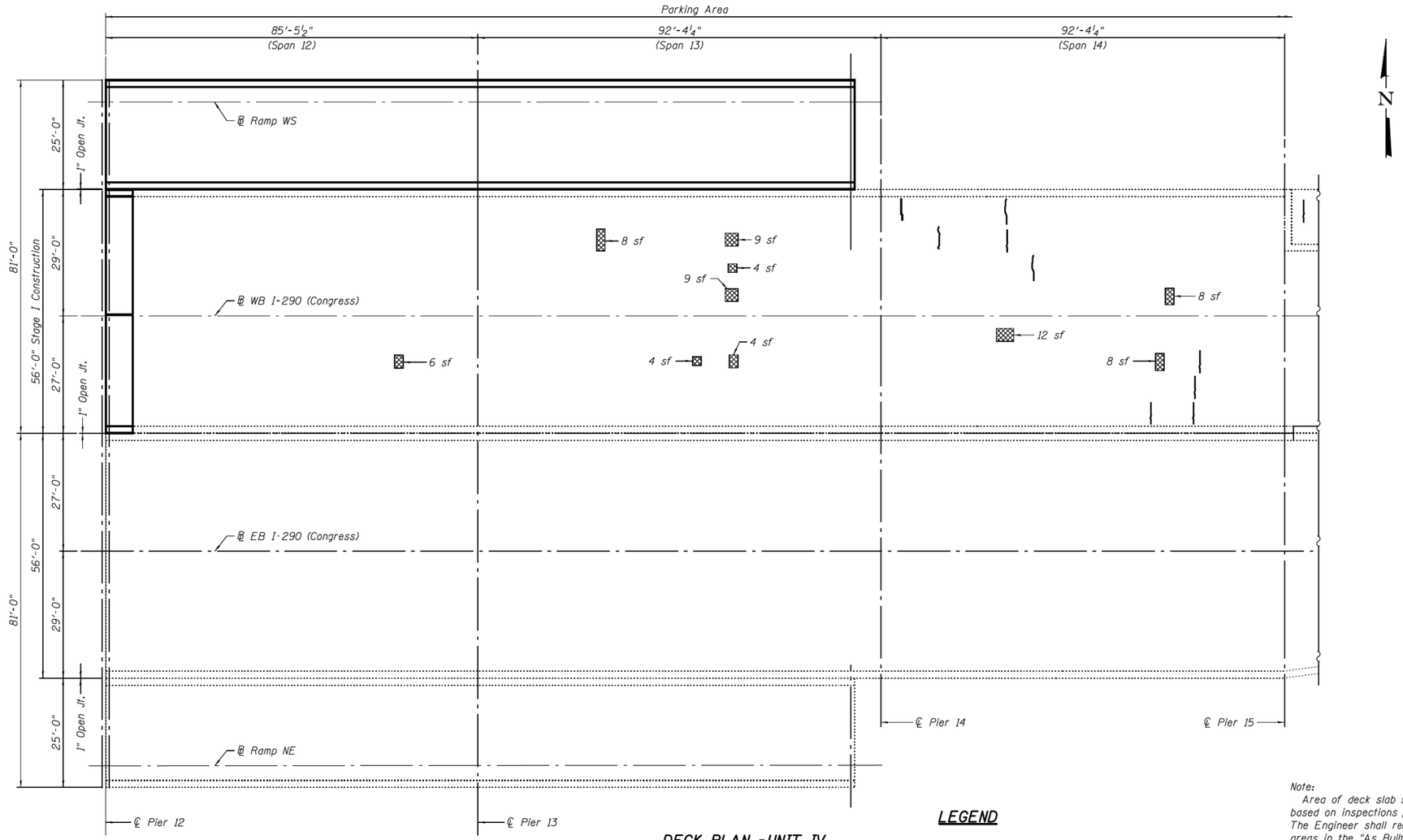

DECK PLAN -UNIT IV

(Spans 12 to 14)

LEGEND

Hairline Crack not to be sealed (Width < 0.06")

Deck Slab Repair (Full Depth)

Note:
Area of deck slab shown are estimated based on inspections performed in July 2012. The Engineer shall record the actual pier repair areas in the "As Built" plans. Changes in repair areas shall not be cause for additional compensation for a change in scope of the work, however, the Contractor will be paid for the quantity furnished at the unit bid price for the work.

BILL OF MATERIAL

Item	Unit	Quantity
Deck Slab Repair (Full Depth, Type I)	Sq Yd	1
Deck Slab Repair (Full Depth, Type II)	Sq Yd	7

0160461-60X78-S133-PRR.dgn

PARSONS BRINCKERHOFF	USER NAME = poteld	DESIGNED - HA	REVISED -	STATE OF ILLINOIS DEPARTMENT OF TRANSPORTATION	DECK REPAIR I – UNIT IV STRUCTURE NO. 016–0461	F.A.I. RTE.	SECTION	COUNTY	TOTAL SHEETS	SHEET NO.
		CHECKED - PJL	REVISED -			90/94/290	2014-004 R&B (WB)	COOK	706	410
	PLOT SCALE = N.T.S.	DRAWN - DE	REVISED -					CONTRACT NO. 60X78		
	PLOT DATE = 3/23/2016	CHECKED - JIG	REVISED -		SHEET NO. S2-133 OF S2-145 SHEETS		ILLINOIS	FED. AID PROJECT		

HBM ENGINEERING GROUP, LLC	USER NAME = ahmad.issa	DESIGNED -	REVISED -	STATE OF ILLINOIS DEPARTMENT OF TRANSPORTATION	EXISTING RECORD DRAWINGS	F.A.I. RTE.	SECTION	COUNTY	TOTAL SHEETS	SHEET NO.
		CHECKED -	REVISED -			90/94/290	2014-013R&B-R	COOK	1972	1775
	PLOT SCALE = N.T.S	DRAWN -	REVISED -					CONTRACT NO. 60X93		
	PLOT DATE = 7/26/2018	CHECKED - MI. MAI	REVISED -				ILLINOIS	FED. AID PROJECT		

FILE NAME: pw:\\617479-PWINT.aecomonline.local:AECOM_DS02_NA\Documents\01 Americas\Transportation\60269938 Circle\Phase_II\000_CAD\008_Structural\Structure_016-1718\Existing Plans\33906-60X93-SXX-Existing198

2:27:06 PM

FOR INFORMATION ONLY

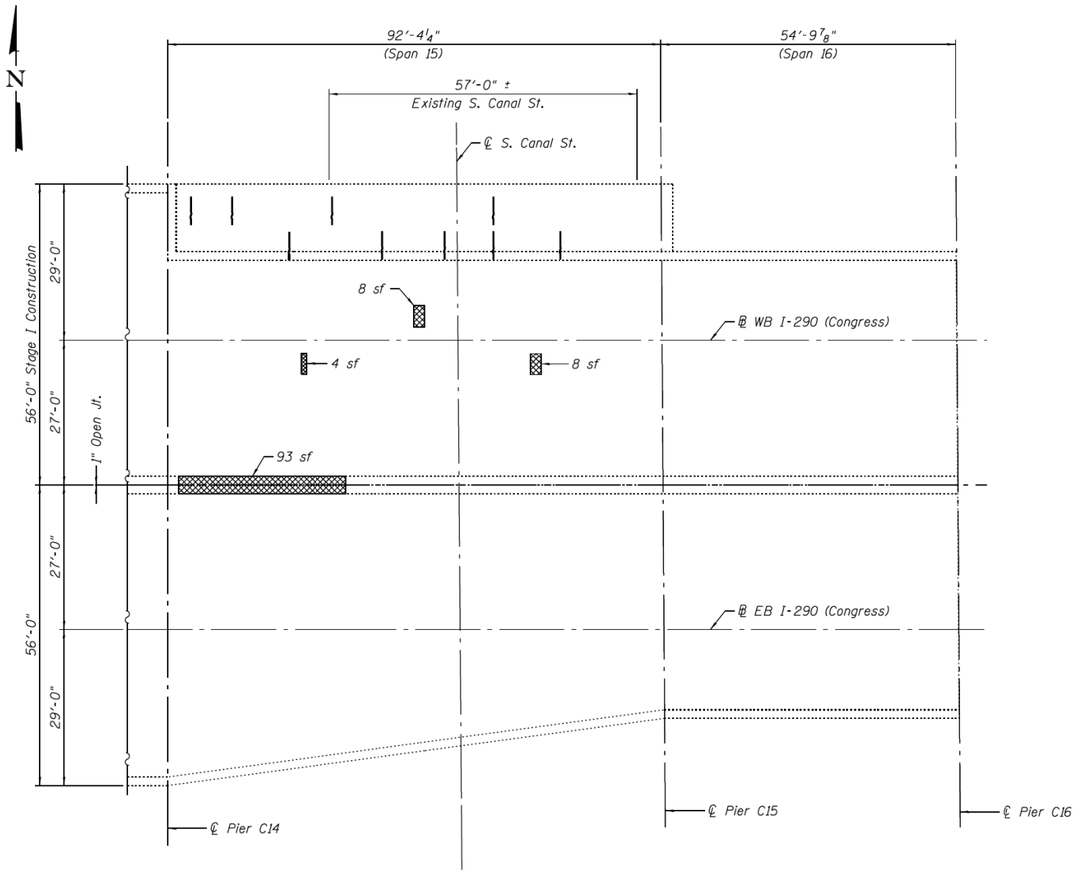

DECK PLAN -UNIT IV

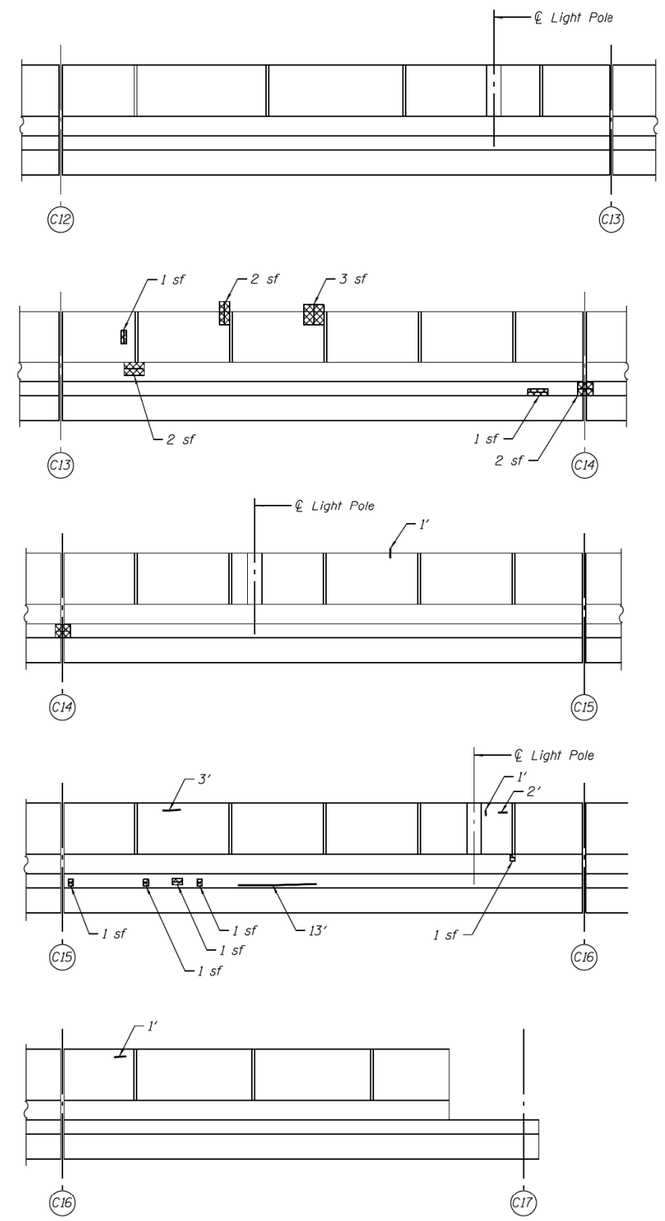

NORTH PARAPET (INSIDE FACE)

(Looking North)

Note:
Area of deck slab shown are estimated based on inspections performed in July 2012. The Engineer shall record the actual pier repair areas in the "As Built" plans. Changes in repair areas shall not be cause for additional compensation for a change in scope of the work, however, the Contractor will be paid for the quantity furnished at the unit bid price for the work.

LEGEND

- Structural Repair of Concrete (Depth greater than 5 Inches)
- Hairline Crack not to be sealed (Width < 0.06")
- Deck Slab Repair (Full Depth)

BILL OF MATERIAL

Item	Unit	Quantity
Deck Slab Repair (Full Depth, Type I)	Sq Yd	1
Deck Slab Repair (Full Depth, Type II)	Sq Yd	12
Structural Repair of Concrete (Depth greater than 5 Inches)	Sq Ft	16

0160461-60X78-S134-DPR.dgn

PARSONS BRINCKERHOFF				STATE OF ILLINOIS DEPARTMENT OF TRANSPORTATION	DECK REPAIR II – UNIT IV STRUCTURE NO. 016–0461	F.A.I. RTE.	SECTION	COUNTY	TOTAL SHEETS	SHEET NO.
	USER NAME = poteld	DESIGNED - HA	REVISED -			90/94/290	2014-004 R&B (WB)	COOK	706	411
		CHECKED - PJL	REVISED -					CONTRACT NO. 60X78		
	PLOT SCALE = N.T.S.	DRAWN - DE	REVISED -					ILLINOIS FED. AID PROJECT		
	PLOT DATE = 3/23/2016	CHECKED - JIG	REVISED -		SHEET NO. S2-134 OF S2-145 SHEETS					

HBM ENGINEERING GROUP, LLC				STATE OF ILLINOIS DEPARTMENT OF TRANSPORTATION	EXISTING RECORD DRAWINGS	F.A.I. RTE.	SECTION	COUNTY	TOTAL SHEETS	SHEET NO.
	USER NAME = ahmad.issa	DESIGNED -	REVISED -			90/94/290	2014-013R&B-R	COOK	1972	1776
		CHECKED -	REVISED -					CONTRACT NO. 60X93		
	PLOT SCALE = N.T.S	DRAWN -	REVISED -					ILLINOIS FED. AID PROJECT		
	PLOT DATE = 7/26/2018	CHECKED - MI, MAI	REVISED -							

FILE NAME: pw:\\617479-PW\INT.aecomonline.local:AECOM_DS02_NA\Documents\01 Americas\Transportation\60269938 Circle\Phase_II\000_CAD\008_Structural\Structure_016-1718\Existing Plans\33906-60X93-SXX-Existing199

2:27:14 PM

FOR INFORMATION ONLY

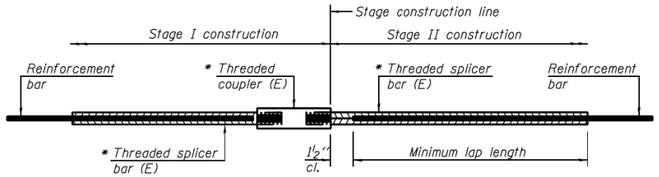

STANDARD BAR SPLICER ASSEMBLY

Minimum Lap Lengths						
Bar size to be spliced	Table 1	Table 2	Table 3	Table 4	Table 5	Table 6
3, 4	1'-5"	1'-11"	2'-1"	2'-4"	2'-7"	2'-11"
5	1'-9"	2'-5"	2'-7"	2'-11"	3'-3"	3'-8"
6	2'-1"	2'-11"	3'-1"	3'-6"	3'-10"	4'-5"
7	2'-9"	3'-10"	4'-2"	4'-8"	5'-2"	5'-10"
8	3'-8"	5'-1"	5'-5"	6'-2"	6'-9"	7'-8"
9	4'-7"	6'-5"	6'-10"	7'-9"	8'-7"	9'-8"

Table 1: Black bar, 0.8 Class C
Table 2: Black bar, Top bar lap, 0.8 Class C
Table 3: Epoxy bar, 0.8 Class C
Table 4: Epoxy bar, Top bar lap, 0.8 Class C
Table 5: Epoxy bar, Class C
Table 6: Epoxy bar, Top bar top, Class C

Threaded splicer bar length = min. lap length + 1½" + thread length

* Epoxy not required on Bar Splicer Assembly components used in conjunction with black bars.

Location	Bar size	No. assemblies required	Table for minimum lap length
Deck - Unit I	#4	1	Table 3
Deck - Unit I	#5	1,346	Table 3
Deck - Unit I	#8	1	Table 3
Deck - Unit II	#4	1	Table 3
Deck - Unit II	#5	2,071	Table 3
Deck - Unit II	#8	1	Table 3
Deck - Unit III	#5	692	Table 3
Deck - Unit IV	#5	30	Table 3
Pier C1	#5	20	Table 5
Pier C1	#10	28	Table 5
Pier C1 (Top Bar)	#10	28	Table 6
Pier C4	#5	20	Table 5
Pier C4	#10	28	Table 5
Pier C4 (Top Bar)	#10	28	Table 6
Pier C9	#5	10	Table 5
Pier C9	#10	14	Table 5
Pier C9 (Top Bar)	#10	14	Table 6
Pier C12	#5	10	Table 5
Pier C12	#10	14	Table 5
Pier C12 (Top Bar)	#10	14	Table 6

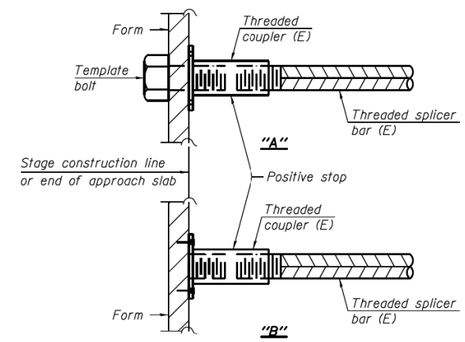

INSTALLATION AND SETTING METHODS

"A" : Set bar splicer assembly by means of a template bolt.
"B" : Set bar splicer assembly by nailing to wood forms or cementing to steel forms.
(E) : Indicates epoxy coating.

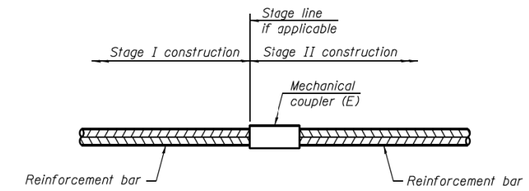

STANDARD MECHANICAL SPLICER

Location	Bar size	No. assemblies required

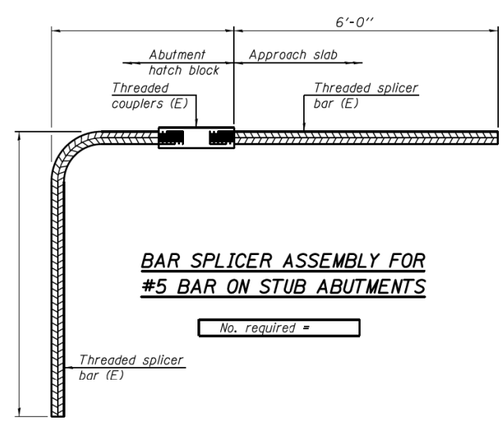

BAR SPLICER ASSEMBLY FOR #5 BAR ON STUB ABUTMENTS

No. required =

NOTES

Splicer bars shall be deformed with threaded ends and have a minimum 60 ksi yield strength.

All reinforcement shall be lapped and tied to the splicer bars.

Bar splicer assemblies shall be epoxy coated according to the requirements for reinforcement bars. See Section 508 of the Standard Specifications.

See approved list of bar splicer assemblies and mechanical splicers for alternatives.

BSD-1 8-31-12

0160461-60X78-S135-BAR.dgn

PARSONS BRINCKERHOFF

USER NAME = poteld	DESIGNED - PJL	REVISED -	
	CHECKED - LFC	REVISED -	
PLOT SCALE = N.T.S.	DRAWN - DCP	REVISED -	
PLOT DATE = 3/23/2016	CHECKED - JIG	REVISED -	

STATE OF ILLINOIS
DEPARTMENT OF TRANSPORTATION

BAR SPLICER ASSEMBLY AND MECHANICAL SPLICER DETAILS
STRUCTURE NO. 016-0461

SHEET NO. S2-135 OF S2-145 SHEETS

F.A.I. RTE.	SECTION	COUNTY	TOTAL SHEETS	SHEET NO.
90/94/290	2014-004 R&B (WB)	COOK	706	412
		CONTRACT NO. 60X78		
		ILLINOIS FED. AID PROJECT		

FILE NAME: pw:\\617479-PWINT.aecomonline.local:AECOM_DS02_NA\Documents\01 Americas\Transportation\60269938 Circle\Phase_II\000_CAD\008_Structural\Structural\Structure_016-1718\Existing Plans\33906-60X93-SXX-Existing200

HBM ENGINEERING GROUP, LLC

USER NAME = ahmad.issa	DESIGNED -	REVISED -	
	CHECKED -	REVISED -	
PLOT SCALE = N.T.S	DRAWN -	REVISED -	
PLOT DATE = 7/26/2018	CHECKED - MI, MAI	REVISED -	

STATE OF ILLINOIS
DEPARTMENT OF TRANSPORTATION

EXISTING RECORD DRAWINGS

F.A.I. RTE.	SECTION	COUNTY	TOTAL SHEETS	SHEET NO.
90/94/290	2014-013R&B-R	COOK	1972	1777
		CONTRACT NO. 60X93		
		ILLINOIS FED. AID PROJECT		

2:27:21 PM

FOR INFORMATION ONLY

Wang Engineering

wangeng@wangeng.com
1145 N Main Street
Lombard, IL 60148
Telephone: 630 953-9928
Fax: 630 953-9938

BORING LOG 1703-B-05

WEI Job No.: 1100-04-01

Client: AECOM
Project: Circle Interchange Reconstruction
Location: Section 17, T39N, R14E of 3rd PM

Datum: NAVD 88
Elevation: 586.64 ft
North: 1898050.50 ft
East: 1171954.33 ft
Station: 5213+04.97
Offset: 31.8899 RT

Page 1 of 3

Elevation (ft)	SOIL AND ROCK DESCRIPTION	Depth (ft)	Sample Type	Sample No.	SPT Values (Blws/6 in)	q_u (tsf)	Moisture Content (%)
	Stiff to very stiff, brown and gray SILTY CLAY LOAM, trace gravel --FILL--		X	1	0 7 5	2.00 P	25
		5	X	2	4 4 5	1.48 B	22
581.1	Very soft to medium stiff, gray CLAY to SILTY CLAY, trace gravel		X	3	2 2 3	0.66 B	24
		10	X	4	1 2 3	0.41 B	25
			X	5	1 1 2	0.33 B	24
		15	X	6	1 1 2	0.25 B	25
			X	7	1 1 2	0.25 B	25
		20	X	8	1 3 3	0.33 B	17
			X	9	2 2 3	0.25 B	25
		25	X	10	2 2 3	0.33 B	26
539.9	Very stiff to hard, gray SILTY CLAY, trace gravel						
		30	X	11	2 2 2	0.25 B	22
			X	12	1 2 2	0.25 B	28
		35	X	13	1 2 2	0.16 B	28
		40	X	14	1 2 4	< 0.25 P	28
		45	X	15	1 2 3	0.25 B	21
		50	X	16	9 16 24	2.54 B	14

GENERAL NOTES

Begin Drilling 10-21-2013 Complete Drilling 10-22-2013
Drilling Contractor Wang Testing Services Drill Rig D-25 ATV
Driller P&N Logger D. Kolpacki Checked by C. Marin
Drilling Method 2.25" HSA to 10', mud rotary thereafter, boring backfilled upon completion

WATER LEVEL DATA

While Drilling ▽ 89.00 ft
At Completion of Drilling ▼ 89.00 ft
Time After Drilling NA
Depth to Water ▽ NA
The stratification lines represent the approximate boundary between soil types; the actual transition may be gradual.

Page 2 of 3

Elevation (ft)	SOIL AND ROCK DESCRIPTION	Depth (ft)	Sample Type	Sample No.	SPT Values (Blws/6 in)	q_u (tsf)	Moisture Content (%)
		55	X	17	12 20 29	6.64 B	14
527.9	Dense, gray SANDY LOAM, trace gravel --Moist--	60	X	18	28 25 24	NP	15
524.9	Hard, gray SILTY CLAY LOAM, trace gravel	65	X	19	18 25 31	5.41 S	13
		70	X	20	17 21 34	4.10 S	13
		75	X	21	15 27 46	8.28 B	15
509.9	Very dense, gray SILTY LOAM, trace gravel	80	X	22	50/5"	NP	10
504.9	Hard, gray SILTY CLAY LOAM, trace gravel	85	X	23	29 38 50/5"	10.00 S	12
	--HARD DRILLING-- --Possible Cobbles--						
497.6	Very dense, gray SILT, trace gravel --Saturated--	90	X	24	14 24 43	NP	23
	--HARD DRILLING-- --Possible Cobbles--	95	X	25	50/4"	NP	17
489.9	Very dense, gray GRAVELLY SAND --Saturated--	100	X	26	50/4"	NP	14

GENERAL NOTES

Begin Drilling 10-21-2013 Complete Drilling 10-22-2013
Drilling Contractor Wang Testing Services Drill Rig D-25 ATV
Driller P&N Logger D. Kolpacki Checked by C. Marin
Drilling Method 2.25" HSA to 10', mud rotary thereafter, boring backfilled upon completion

WATER LEVEL DATA

While Drilling ▽ 89.00 ft
At Completion of Drilling ▼ 89.00 ft
Time After Drilling NA
Depth to Water ▽ NA
The stratification lines represent the approximate boundary between soil types; the actual transition may be gradual.

Page 3 of 3

Elevation (ft)	SOIL AND ROCK DESCRIPTION	Depth (ft)	Sample Type	Sample No.	SPT Values (Blws/6 in)	q_u (tsf)	Moisture Content (%)
484.9	--HARD DRILLING-- Very dense, greenish gray SILT/SHALE, some DOLOSTONE fragments --WEATHERED BEDROCK--	105	X	27	50/5"	NP	16
479.6	Boring terminated at 107.00 ft						
		110					
		115					
		120					
		125					

GENERAL NOTES

Begin Drilling 10-21-2013 Complete Drilling 10-22-2013
Drilling Contractor Wang Testing Services Drill Rig D-25 ATV
Driller P&N Logger D. Kolpacki Checked by C. Marin
Drilling Method 2.25" HSA to 10', mud rotary thereafter, boring backfilled upon completion

WATER LEVEL DATA

While Drilling ▽ 89.00 ft
At Completion of Drilling ▼ 89.00 ft
Time After Drilling NA
Depth to Water ▽ NA
The stratification lines represent the approximate boundary between soil types; the actual transition may be gradual.

0160461-60X78-S136-BOR.dgn

PARSONS BRINCKERHOFF	USER NAME = poteld	DESIGNED - PJL	REVISED -	STATE OF ILLINOIS DEPARTMENT OF TRANSPORTATION	BORING LOGS I STRUCTURE NO. 016-0461	F.A.I. RTE.	SECTION	COUNTY	TOTAL SHEETS	SHEET NO.
		CHECKED - AH	REVISED -			90/94/290	2014-004 R&B (WB)	COOK	706	413
	PLOT SCALE = N.T.S.	DRAWN - DCP	REVISED -					CONTRACT NO. 60X78		
	PLOT DATE = 3/23/2016	CHECKED - JIG	REVISED -		SHEET NO. S2-136 OF S2-145 SHEETS		ILLINOIS	FED. AID PROJECT		

HBM ENGINEERING GROUP, LLC	USER NAME = ahmad.issa	DESIGNED -	REVISED -	STATE OF ILLINOIS DEPARTMENT OF TRANSPORTATION	EXISTING RECORD DRAWINGS	F.A.I. RTE.	SECTION	COUNTY	TOTAL SHEETS	SHEET NO.
		CHECKED -	REVISED -			90/94/290	2014-013R&B-R	COOK	1972	1778
	PLOT SCALE = N.T.S	DRAWN -	REVISED -					CONTRACT NO. 60X93		
	PLOT DATE = 7/26/2018	CHECKED - MI, MAI	REVISED -				ILLINOIS	FED. AID PROJECT		

FILE NAME: pw:\\617479-PWINT.aecomonline.local:AECOM_DS02_NA\Documents\01 Americas\Transportation\60269938 Circle\Phase_II\000_CAD\008_Structural\Structure_016-1718\Existing Plans\33906-60X93-SXX-Existing201

2:27:30 PM

FOR INFORMATION ONLY

Wang Engineering

wangeng@wangeng.com
1145 N Main Street
Lombard, IL 60148
Telephone: 630 953-9928
Fax: 630 953-9938

BORING LOG 1715-PMT-01

WEI Job No.: 1100-04-01

Client: AECOM
Project: Circle Interchange Reconstruction
Location: Section 17, T39N, R14E of 3rd PM

Datum: NAVD 88
Elevation: 586.37 ft
North: 1898101.38 ft
East: 1171922.25 ft
Station: 1211+54.22
Offset: 33.6196 LT

Profile	Elevation (ft)	SOIL AND ROCK DESCRIPTION	Depth (ft)	Sample Type	Sample No.	SPT Values (Blw/6 in)	Qu (tsf)	Moisture Content (%)
		Drilled without sampling						
			5					
			10					
			15					
			20					
			25					
			30					
			35					
			40					
			45					
			50					

GENERAL NOTES

Begin Drilling 04-24-2014 Complete Drilling 04-24-2014
Drilling Contractor Wang Testing Services Drill Rig D-25 ATV
Driller N&J Logger A. Happel Checked by C. Marin
Drilling Method 2.25" HSA to 10', mud rotary thereafter, boring
backfilled upon completion

WATER LEVEL DATA

While Drilling NA
At Completion of Drilling NA
Time After Drilling NA
Depth to Water NA
The stratification lines represent the approximate boundary between soil types; the actual transition may be gradual.

WANGENGINC 1100341.GPJ WANGENG.GDT 8/12/14

Wang Engineering

wangeng@wangeng.com
1145 N Main Street
Lombard, IL 60148
Telephone: 630 953-9928
Fax: 630 953-9938

BORING LOG 1715-PMT-01

WEI Job No.: 1100-04-01

Client: AECOM
Project: Circle Interchange Reconstruction
Location: Section 17, T39N, R14E of 3rd PM

Datum: NAVD 88
Elevation: 586.37 ft
North: 1898101.38 ft
East: 1171922.25 ft
Station: 1211+54.22
Offset: 33.6196 LT

Profile	Elevation (ft)	SOIL AND ROCK DESCRIPTION	Depth (ft)	Sample Type	Sample No.	SPT Values (Blw/6 in)	Qu (tsf)	Moisture Content (%)
	531.4	Hard, gray SILTY CLAY, little gravel	55		1	11 11 20	4.10 B	16
		--Pressure Meter Test--	60	PMT	1			
			65					
			70		2	18 29 48	7.38 S	13
		--Pressure Meter Test--		PMT	2			
	512.1	Very dense, gray SILTY LOAM to	75					

Profile	Elevation (ft)	SOIL AND ROCK DESCRIPTION	Depth (ft)	Sample Type	Sample No.	SPT Values (Blw/6 in)	Qu (tsf)	Moisture Content (%)
		SILTY CLAY LOAM, little gravel						
		--Pressure Meter Test--		PMT	3			
			80		3	43	NP	11
		--Pressure Meter Test--		PMT	4			
			85		4	50/4	NP	11
	469.6	Very dense, gray SANDY GRAVEL						
	466.9	Hard, gray SILTY CLAY LOAM	90		5	34 40 26/2	NP	15
	464.6	Very dense, gray SILTY LOAM, trace gravel						
			95		6	50/4	NP	15
		--HARD DRILLING 95-98.5 ft-- --Possible Cobbles--						
			100		7	50/3	NP	13

GENERAL NOTES

Begin Drilling 04-24-2014 Complete Drilling 04-24-2014
Drilling Contractor Wang Testing Services Drill Rig D-25 ATV
Driller N&J Logger A. Happel Checked by C. Marin
Drilling Method 2.25" HSA to 10', mud rotary thereafter, boring
backfilled upon completion

WATER LEVEL DATA

While Drilling NA
At Completion of Drilling NA
Time After Drilling NA
Depth to Water NA
The stratification lines represent the approximate boundary between soil types; the actual transition may be gradual.

WANGENGINC 1100341.GPJ WANGENG.GDT 8/12/14

Wang Engineering

wangeng@wangeng.com
1145 N Main Street
Lombard, IL 60148
Telephone: 630 953-9928
Fax: 630 953-9938

BORING LOG 1715-PMT-01

WEI Job No.: 1100-04-01

Client: AECOM
Project: Circle Interchange Reconstruction
Location: Section 17, T39N, R14E of 3rd PM

Datum: NAVD 88
Elevation: 586.37 ft
North: 1898101.38 ft
East: 1171922.25 ft
Station: 1211+54.22
Offset: 33.6196 LT

Profile	Elevation (ft)	SOIL AND ROCK DESCRIPTION	Depth (ft)	Sample Type	Sample No.	SPT Values (Blw/6 in)	Qu (tsf)	Moisture Content (%)
	484.6	Very dense, gray SANDY GRAVEL						
			105		8	50/4	NP	12
	480.4	Strong, light gray and white, poor rock mass quality, bedded, moderately vuggy porosity, fresh DOLOSTONE, up to 7-inch beds, 3-inch spaced joints, horizontal joints with 0.05 to more than 0.2-inch infilling, hard joint wall, with greenish gray argillaceous infill, and siloitic surfaces.		CORE				
			110		1			
		--Run 1-RECOVERY=77%-- --RQD =40%--						
	471.9	Boring terminated at 114.50 ft	115					
			120					
			125					

GENERAL NOTES

Begin Drilling 04-24-2014 Complete Drilling 04-24-2014
Drilling Contractor Wang Testing Services Drill Rig D-25 ATV
Driller N&J Logger A. Happel Checked by C. Marin
Drilling Method 2.25" HSA to 10', mud rotary thereafter, boring
backfilled upon completion

WATER LEVEL DATA

While Drilling NA
At Completion of Drilling NA
Time After Drilling NA
Depth to Water NA
The stratification lines represent the approximate boundary between soil types; the actual transition may be gradual.

WANGENGINC 1100341.GPJ WANGENG.GDT 8/12/14

0160461-60X78-S137-BOR.dgn

PARSONS BRINCKERHOFF	USER NAME = poteld	DESIGNED - PJL	REVISED -	STATE OF ILLINOIS DEPARTMENT OF TRANSPORTATION	BORING LOGS II STRUCTURE NO. 016-0461	F.A.I. RTE.	SECTION	COUNTY	TOTAL SHEETS	SHEET NO.
		CHECKED - AH	REVISED -			90/94/290	2014-004 R&B (WB)	COOK	706	414
	PLOT SCALE = N.T.S.	DRAWN - DCP	REVISED -					CONTRACT NO. 60X78		
	PLOT DATE = 3/23/2016	CHECKED - JIG	REVISED -		SHEET NO. S2-137 OF S2-145 SHEETS			ILLINOIS FED. AID PROJECT		

HBM ENGINEERING GROUP, LLC	USER NAME = ahmad.issa	DESIGNED -	REVISED -	STATE OF ILLINOIS DEPARTMENT OF TRANSPORTATION	EXISTING RECORD DRAWINGS	F.A.I. RTE.	SECTION	COUNTY	TOTAL SHEETS	SHEET NO.
		CHECKED -	REVISED -			90/94/290	2014-013R&B-R	COOK	1972	1779
	PLOT SCALE = N.T.S	DRAWN -	REVISED -					CONTRACT NO. 60X93		
	PLOT DATE = 7/26/2018	CHECKED - MI, MAI	REVISED -					ILLINOIS FED. AID PROJECT		

FILE NAME: pw:\\617479-PWINT.aecomonline.local:AECOM_DS02_NA\Documents\01 Americas\Transportation\60269938 Circle\Phase_II\000_CAD\008_Structural\Structure_016-1718\Existing Plans\33906-60X93-SXX-Existing202

2:27:37 PM

FOR INFORMATION ONLY

Wang Engineering
wangeng@wangeng.com
1145 N Main Street
Lombard, IL 60148
Telephone: 630 953-9928
Fax: 630 953-9938

BORING LOG 1715-VS-01

WEI Job No.: 1100-04-01

Client: AECOM
Project: Circle Interchange Reconstruction
Location: Section 17, T39N, R14E of 3rd PM

Datum: NAVD 88
Elevation: 586.35 ft
North: 1898112.83 ft
East: 1171916.67 ft
Station: 1211+63.00
Offset: 25.6304 LT

Page 1 of 1

Profile	Elevation (ft)	SOIL AND ROCK DESCRIPTION	Depth (ft)	Sample Type	Sample No.	SPT Values (Blows/6 in)	Qu (tsf)	Moisture Content (%)
		Drilled without sampling						
		--In-Situ Vane Shear, 10.0 feet-- $S_{u\,undis}$ = 1036.0 psf-- $S_{u\,remold}$ = 543.9 psf-- --Sensitivity = 1.90--	10		1	VS		
		--In-Situ Vane Shear, 15.0 feet-- $S_{u\,undis}$ = 880.6 psf-- $S_{u\,remold}$ = 466.2 psf-- --Sensitivity = 1.89--	15		2	VS		
		--In-Situ Vane Shear, 20.0 feet-- $S_{u\,undis}$ = 958.3 psf-- $S_{u\,remold}$ = 595.7 psf-- --Sensitivity = 1.61--	20		3	VS		
		--In-Situ Vane Shear, 25.0 feet-- $S_{u\,undis}$ = 595.7 psf-- $S_{u\,remold}$ = 414.4 psf-- --Sensitivity = 1.44--			4	VS		
		--In-Situ Vane Shear, 30.0 feet-- $S_{u\,undis}$ = 828.8 psf-- $S_{u\,remold}$ = 466.2 psf-- --Sensitivity = 1.78--	30		5	VS		
		--In-Situ Vane Shear, 35.0 feet-- $S_{u\,undis}$ = 1139.6 psf-- $S_{u\,remold}$ = 673.4 psf-- --Sensitivity = 1.69--	35		6	VS		
		--In-Situ Vane Shear, 40.0 feet-- $S_{u\,undis}$ = 1139.6 psf-- $S_{u\,remold}$ = 725.2 psf-- --Sensitivity = 1.57--	40		7	VS		
	545.9	Boring terminated at 40.50 ft						

GENERAL NOTES

Begin Drilling: 03-27-2014 Complete Drilling: 03-27-2014
Drilling Contractor: Wang Testing Services Drill Rig: D-25 ATV
Driller: N&J Logger: F. Bozga Checked by: C. Marin
Drilling Method: 3.25" HSA, boring backfilled upon completion

WATER LEVEL DATA

While Drilling: NA
At Completion of Drilling: NA
Time After Drilling: NA
Depth to Water: NA

The stratification lines represent the approximate boundary between soil types; the actual transition may be gradual.

WANGENGINC 1100040.GPJ WANGENG.GDT 3/12/14

Wang Engineering
wangeng@wangeng.com
1145 N Main Street
Lombard, IL 60148
Telephone: 630 953-9928
Fax: 630 953-9938

BORING LOG 0461-B-01

WEI Job No.: 1100-04-01

Client: AECOM
Project: Circle Interchange Reconstruction
Location: Section 17, T39N, R14E of 3rd PM

Datum: NAVD 88
Elevation: 587.18 ft
North: 1898107.11 ft
East: 1172063.72 ft
Station: 1210+23.99
Offset: 19.2353 RT

Page 1 of 3

Profile	Elevation (ft)	SOIL AND ROCK DESCRIPTION	Depth (ft)	Sample Type	Sample No.	SPT Values (Blows/6 in)	Qu (tsf)	Moisture Content (%)
	586.4	10-inch thick CONCRETE --PAVEMENT--						
	586.0	4-inch thick GRAVELLY SAND --BASE COURSE--			1	15 15 18	NP	21
	584.7	Dense, gray, fine SAND --FILL--						
		Very stiff, gray SILTY CLAY, trace gravel	5		2	3 3 4	2.05 B	22
	581.7	Very soft to soft, gray CLAY to SILTY CLAY, trace gravel			3	2 1 2	0.41 B	25
			10		4	0 1 2	0.33 B	24
					5	0 1 1	0.16 B	26
			15		6	0 0 0	0.16 B	27
					7	0 0 0	0.25 B	26
			20		8	0 0 2	0.25 B	26
					9	1 2 2	0.41 B	23
			25		10	0 1 2	0.25 B	23
	588.4	Stiff, gray SILTY CLAY LOAM, trace gravel	30		11	0 2 2	0.44 B	26
					12	2 2 5	1.17 N/6	14
			35		13	2 3 3	1.00 N/6	
	580.4	Very soft to soft, gray CLAY to SILTY CLAY, trace gravel						
			40		14	0 1 2	0.16 B	23
	575.4	Very stiff to hard, gray SILTY CLAY to SILTY CLAY LOAM, trace gravel						
			45		15	0 1 2	0.49 B	29
			50		16	1 7 8	2.46 B	23

GENERAL NOTES

Begin Drilling: 03-24-2014 Complete Drilling: 03-24-2014
Drilling Contractor: Wang Testing Services Drill Rig: CME-55 TMR
Driller: R&N Logger: M de los Reyes Checked by: C. Marin
Drilling Method: 2.25" SSA to 12.5', mud rotary thereafter, boring backfilled upon completion

WATER LEVEL DATA

While Drilling: NA
At Completion of Drilling: NA
Time After Drilling: NA
Depth to Water: NA

The stratification lines represent the approximate boundary between soil types; the actual transition may be gradual.

WANGENGINC 1100040.GPJ WANGENG.GDT 3/28/14

Wang Engineering
wangeng@wangeng.com
1145 N Main Street
Lombard, IL 60148
Telephone: 630 953-9928
Fax: 630 953-9938

BORING LOG 0461-B-01

WEI Job No.: 1100-04-01

Client: AECOM
Project: Circle Interchange Reconstruction
Location: Section 17, T39N, R14E of 3rd PM

Datum: NAVD 88
Elevation: 587.18 ft
North: 1898107.11 ft
East: 1172063.72 ft
Station: 1210+23.99
Offset: 19.2353 RT

Page 2 of 3

Profile	Elevation (ft)	SOIL AND ROCK DESCRIPTION	Depth (ft)	Sample Type	Sample No.	SPT Values (Blows/6 in)	Qu (tsf)	Moisture Content (%)
			55		17	8 11 14	6.56 B	14
			60		18	8 10 13	4.10 B	20
	525.4	Hard, gray SILTY CLAY LOAM to SILTY LOAM, trace gravel						
			65		19	18 30 28	2.46 S	10
			70		20	15 17 21	8.20 S	13
			75		21	11 17 22	9.59 B	14
	487.2							
	500.4	Very dense, gray GRAVELLY SAND						
			80		22	50/5	NP	13
		--HARD DRILLING-- --Possible Cobbles--	85		23	40 50/5	NP	22
			90		24	50/4	NP	9
		--HARD DRILLING-- --Possible Cobbles--	95		25	54/2	NP	12
		--HARD DRILLING-- --Possible Cobbles--	100		26	50/4	NP	15

GENERAL NOTES

Begin Drilling: 03-24-2014 Complete Drilling: 03-24-2014
Drilling Contractor: Wang Testing Services Drill Rig: CME-55 TMR
Driller: R&N Logger: M de los Reyes Checked by: C. Marin
Drilling Method: 2.25" SSA to 12.5', mud rotary thereafter, boring backfilled upon completion

WATER LEVEL DATA

While Drilling: NA
At Completion of Drilling: NA
Time After Drilling: NA
Depth to Water: NA

The stratification lines represent the approximate boundary between soil types; the actual transition may be gradual.

WANGENGINC 1100040.GPJ WANGENG.GDT 3/28/14

0160461-60X78-S138-BOR-dgn

PARSONS BRINCKERHOFF	USER NAME = poteld	DESIGNED - PJL	REVISED -	STATE OF ILLINOIS DEPARTMENT OF TRANSPORTATION	BORING LOGS III STRUCTURE NO. 016-0461	F.A.I. RTE.	SECTION	COUNTY	TOTAL SHEETS	SHEET NO.
		CHECKED - AH	REVISED -			90/94/290	2014-004 R&B (WB)	COOK	706	415
	PLOT SCALE = N.T.S.	DRAWN - DCP	REVISED -					CONTRACT NO. 60X78		
	PLOT DATE = 3/23/2016	CHECKED - JIG	REVISED -		SHEET NO. S2-138 OF S2-145 SHEETS			ILLINOIS FED. AID PROJECT		

HBM ENGINEERING GROUP, LLC	USER NAME = ahmad.issa	DESIGNED -	REVISED -	STATE OF ILLINOIS DEPARTMENT OF TRANSPORTATION	EXISTING RECORD DRAWINGS	F.A.I. RTE.	SECTION	COUNTY	TOTAL SHEETS	SHEET NO.
		CHECKED -	REVISED -			90/94/290	2014-013R&B-R	COOK	1972	1780
	PLOT SCALE = N.T.S	DRAWN -	REVISED -					CONTRACT NO. 60X93		
	PLOT DATE = 7/26/2018	CHECKED - MI. MAI	REVISED -					ILLINOIS FED. AID PROJECT		

FILE NAME: pw:\\617479-PWINT.aecomonline.local:AECOM_DS02_NA\Documents\01 Americas\Transportation\60269938 Circle\Phase_II\000_CAD\008_Structural\Structure_016-1718\Existing Plans\33906-60X93-SXX-Existing203

2:27:45 PM

FOR INFORMATION ONLY

BORING LOG 0461-B-01

Page 3 of 3

Wang Engineering
wangeng@wangeng.com
1145 N Main Street
Lombard, IL 60148
Telephone: 630 953-9928
Fax: 630 953-9938

WEI Job No.: 1100-04-01
Client: AECOM
Project: Circle Interchange Reconstruction
Location: Section 17, T39N, R14E of 3rd PM

Datum: NAVD 88
Elevation: 587.18 ft
North: 1898107.11 ft
East: 1172063.72 ft
Station: 1210+23.99
Offset: 19.2353 RT

Elevation (ft)	SOIL AND ROCK DESCRIPTION	Depth (ft)
	--WEATHERED BEDROCK-- --DIFFICULT DRILLING--	
484.7	--AUGER REFUSAL--	
	Boring terminated at 102.50 ft	
		105
		110
		115
		120
		125

Sample Type, Sample No., SPT Values (Blows/6 in), Qu (tsf), Moisture Content (%)

GENERAL NOTES

Begin Drilling: 03-24-2014 Complete Drilling: 03-24-2014
Drilling Contractor: Wang Testing Services Drill Rig: CME-55 TMR
Driller: R&N Logger: M de los Reyes Checked by: C. Marin
Drilling Method: 2.25" SSA to 12.5', mud rotary thereafter, boring backfilled upon completion

WATER LEVEL DATA

While Drilling: NA
At Completion of Drilling: NA
Time After Drilling: NA
Depth to Water: NA
The stratification lines represent the approximate boundary between soil types; the actual transition may be gradual.

BORING LOG 0461-B-02

Page 1 of 3

Wang Engineering
wangeng@wangeng.com
1145 N Main Street
Lombard, IL 60148
Telephone: 630 953-9928
Fax: 630 953-9938

WEI Job No.: 1100-04-01
Client: AECOM
Project: Circle Interchange Reconstruction
Location: Section 17, T39N, R14E of 3rd PM

Datum: NAVD 88
Elevation: 589.44 ft
North: 1898095.48 ft
East: 1172219.91 ft
Station: 1208+62.48
Offset: 26.1117 RT

Elevation (ft)	SOIL AND ROCK DESCRIPTION	Depth (ft)	Sample Type	Sample No.	SPT Values (Blows/6 in)	Qu (tsf)	Moisture Content (%)
	9.5-inch thick CONCRETE --PAVEMENT--						
588.6							
587.8	Gray CRUSHED STONE --BASE COURSE--			1	0 5 5	NP	17
586.4	Medium dense, brown and black SILTY LOAM --FILL--						
	Loose, brown, fine SAND	5		2	3 4 5	NP	20
583.0	Stiff, brown SILTY CLAY LOAM, trace gravel			3	2 3 5	1.31 B	20
581.4	Very soft to medium stiff, gray CLAY to SILTY CLAY, trace gravel	10		4	1 2 2	0.49 B	24
				5	0 1 2	0.25 B	28
		15		6	0 1 1	0.17 B	26
				7	1 1 1	0.16 B	26
		20		8	0 1 1	0.16 B	29
				9	0 0 2	0.08 B	26
		25		10	1 1 2	0.16 B	27

Elevation (ft)	SOIL AND ROCK DESCRIPTION	Depth (ft)	Sample Type	Sample No.	SPT Values (Blows/6 in)	Qu (tsf)	Moisture Content (%)
		30		11	1 1 2	0.08 B	29
				12	1 1 2	0.33 B	26
		35		13	1 1 2	0.25 B	27
		40		14	1 1 2	0.49 B	26
		45		15	2 3 3	0.82 B	24
		50		16	2 3 5	0.82 B	19

GENERAL NOTES

Begin Drilling: 03-20-2014 Complete Drilling: 03-20-2014
Drilling Contractor: Wang Testing Services Drill Rig: CME-55 TMR
Driller: R&N Logger: F. Bozga Checked by: C. Marin
Drilling Method: 2.25" SSA to 12.5', mud rotary thereafter, boring backfilled upon completion

WATER LEVEL DATA

While Drilling: NA
At Completion of Drilling: NA
Time After Drilling: NA
Depth to Water: NA
The stratification lines represent the approximate boundary between soil types; the actual transition may be gradual.

BORING LOG 0461-B-02

Page 2 of 3

Wang Engineering
wangeng@wangeng.com
1145 N Main Street
Lombard, IL 60148
Telephone: 630 953-9928
Fax: 630 953-9938

WEI Job No.: 1100-04-01
Client: AECOM
Project: Circle Interchange Reconstruction
Location: Section 17, T39N, R14E of 3rd PM

Datum: NAVD 88
Elevation: 589.44 ft
North: 1898095.48 ft
East: 1172219.91 ft
Station: 1208+62.48
Offset: 26.1117 RT

Elevation (ft)	SOIL AND ROCK DESCRIPTION	Depth (ft)	Sample Type	Sample No.	SPT Values (Blows/6 in)	Qu (tsf)	Moisture Content (%)
537.7	Hard, gray SILTY CLAY LOAM to SILTY LOAM, trace gravel						
		55		17	5 9 11	5.41 B	18
	--HARD DRILLING-- --Possible Cobbles--						
		60		18	12 24 36	5.25 B	17
		65		19	7 13 20	4.18 B	16
		70		20	13 27 27	6.15 B	15
		75		21	11 19 27	6.97 S	13

Elevation (ft)	SOIL AND ROCK DESCRIPTION	Depth (ft)	Sample Type	Sample No.	SPT Values (Blows/6 in)	Qu (tsf)	Moisture Content (%)
	--L_L(%)=27, P_I(%)=17-- --%Gravel=3.6-- --%Sand=18.7--80 --%Silt=58.0-- --%Clay=19.7-- --A-4 (6)--						
		85		22	11 20 25	9.76 B	13
				23	40 50/5	5.58 S	11
502.7	Very dense, gray GRAVELLY SAND to SANDY LOAM						
		90		24	23 40/4	NP	13
		95		25	80/6	NP	11
		100		26	75/5	NP	14

GENERAL NOTES

Begin Drilling: 03-20-2014 Complete Drilling: 03-20-2014
Drilling Contractor: Wang Testing Services Drill Rig: CME-55 TMR
Driller: R&N Logger: F. Bozga Checked by: C. Marin
Drilling Method: 2.25" SSA to 12.5', mud rotary thereafter, boring backfilled upon completion

WATER LEVEL DATA

While Drilling: NA
At Completion of Drilling: NA
Time After Drilling: NA
Depth to Water: NA
The stratification lines represent the approximate boundary between soil types; the actual transition may be gradual.

0160461-60X78-S139-BOR.dgn

PARSONS BRINCKERHOFF	USER NAME = poteld	DESIGNED - PJL	REVISED -	STATE OF ILLINOIS DEPARTMENT OF TRANSPORTATION	BORING LOGS IV STRUCTURE NO. 016-0461	F.A.I. RTE.	SECTION	COUNTY	TOTAL SHEETS	SHEET NO.
		CHECKED - AH	REVISED -			90/94/290	2014-004 R&B (WB)	COOK	706	416
	PLOT SCALE = N.T.S.	DRAWN - DCP	REVISED -					CONTRACT NO. 60X78		
	PLOT DATE = 3/23/2016	CHECKED - JIG	REVISED -		SHEET NO. S2-139 OF S2-145 SHEETS			ILLINOIS FED. AID PROJECT		

HBM ENGINEERING GROUP, LLC	USER NAME = ahmad.issa	DESIGNED -	REVISED -	STATE OF ILLINOIS DEPARTMENT OF TRANSPORTATION	EXISTING RECORD DRAWINGS	F.A.I. RTE.	SECTION	COUNTY	TOTAL SHEETS	SHEET NO.
		CHECKED -	REVISED -			90/94/290	2014-013R&B-R	COOK	1972	1781
	PLOT SCALE = N.T.S	DRAWN -	REVISED -					CONTRACT NO. 60X93		
	PLOT DATE = 7/26/2018	CHECKED - MI, MAI	REVISED -					ILLINOIS FED. AID PROJECT		

FILE NAME: pw:\\617479-PWINT.aecomonline.local:AECOM_DS02_NA\Documents\01 Americas\Transportation\60269938 Circle\Phase_II\000_CAD\008_Structural\Structural\Structure_016-1718\Existing Plans\33906-60X93-SXX-Existing204

2:27:53 PM

FOR INFORMATION ONLY

Wang Engineering
wangeng@wangeng.com
1145 N Main Street
Lombard, IL 60148
Telephone: 630 953-9928
Fax: 630 953-9938

BORING LOG 0461-B-02

WEI Job No.: 1100-04-01

Client: AECOM
Project: Circle Interchange Reconstruction
Location: Section 17, T39N, R14E of 3rd PM

Datum: NAVD 88
Elevation: 589.44 ft
North: 1898095.48 ft
East: 1172219.91 ft
Station: 1208+82.48
Offset: 26.1117 RT

Page 3 of 3

Elevation (ft)	SOIL AND ROCK DESCRIPTION
487.4	--DIFFICULT DRILLING--
	--WEATHERED BEDROCK--
485.4	--AUGER REFUSAL--
	Boring terminated at 104.00 ft

Depth (ft): 105, 110, 115, 120, 125

GENERAL NOTES

Begin Drilling: 03-20-2014 Complete Drilling: 03-20-2014
Drilling Contractor: Wang Testing Services Drill Rig: CME-55 TMR
Driller: R&N Logger: F. Bozga Checked by: C. Marin
Drilling Method: 2.25" SSA to 12.5', mud rotary thereafter, boring backfilled upon completion

WATER LEVEL DATA

While Drilling: NA
At Completion of Drilling: NA
Time After Drilling: NA
Depth to Water: NA
The stratification lines represent the approximate boundary between soil types; the actual transition may be gradual.

BORING LOG 0461-B-03

WEI Job No.: 1100-04-01

Client: AECOM
Project: Circle Interchange Reconstruction
Location: Section 17, T39N, R14E of 3rd PM

Datum: NAVD 88
Elevation: 592.02 ft
North: 1898094.57 ft
East: 1172338.82 ft
Station: 1207+43.60
Offset: 28.6318 RT

Page 1 of 2

Elevation (ft)	SOIL AND ROCK DESCRIPTION
591.2	10-inch thick CONCRETE --PAVEMENT--
	Medium dense, brown GRAVELLY SAND --FILL--
584.0	Medium dense, brown and gray SAND to SANDY LOAM --WET-- --FILL--
581.5	Brown GRAVELLY SAND
580.5	--FILL--
	Stiff, gray SILTY CLAY, trace gravel
578.0	Gray SAND
577.7	Very soft to medium stiff, gray CLAY to SILTY CLAY, trace gravel
565.3	Stiff, gray SILTY CLAY, trace gravel

Sample No.	SPT Values (Blows/6 in)	Qu (tsf)	Moisture Content (%)
1	12 12 6	NP	25
2	4 10 10	NP	11
3	12 13 14	NP	15
4	10 4 8	NP	29
5	1 2 2	1.23 B	23
6	6 4 2	< 0.25 P	15
7	0 1 1	0.74 B	23
8	0 0 0	0.41 B	25
9	0 1 1	0.49 B	29
10	0 1 2	0.74 B	23
11	1 2 1	< 0.06 B	28
12	0 1 2	< 0.25 P	27
13	1 1 1	< 0.06 B	27
14	0 0 0	0.16 B	27
15	0 0 0	0.08 B	27
16	0 2 4	1.00 N/6	

Depth (ft): 5, 10, 15, 20, 25, 30, 35, 40, 45, 50

GENERAL NOTES

Begin Drilling: 03-23-2014 Complete Drilling: 03-23-2014
Drilling Contractor: Wang Testing Services Drill Rig: CME-55 TMR
Driller: R&N Logger: M de los Reyes Checked by: C. Marin
Drilling Method: 2.25" SSA to 12.5', mud rotary thereafter, boring backfilled upon completion

WATER LEVEL DATA

While Drilling: NA
At Completion of Drilling: NA
Time After Drilling: NA
Depth to Water: NA
The stratification lines represent the approximate boundary between soil types; the actual transition may be gradual.

BORING LOG 0461-B-03

WEI Job No.: 1100-04-01

Client: AECOM
Project: Circle Interchange Reconstruction
Location: Section 17, T39N, R14E of 3rd PM

Datum: NAVD 88
Elevation: 592.02 ft
North: 1898094.57 ft
East: 1172338.82 ft
Station: 1207+43.60
Offset: 28.6318 RT

Page 2 of 2

Elevation (ft)	SOIL AND ROCK DESCRIPTION
530.3	Very stiff to hard, gray SILTY CLAY LOAM to SILTY LOAM, trace gravel
	--3-in gray SILT, wet-->
502.0	--HARD DRILLING-- --Possible Cobbles--
501.0	--WEATHERED BEDROCK-- --AUGER REFUSAL--
	Boring terminated at 91.00 ft

Sample No.	SPT Values (Blows/6 in)	Qu (tsf)	Moisture Content (%)
17	4 5 7	1.64 B	21
18	5 7 12	1.23 B	15
19	6 10 15	4.10 B	17
20	12 15 30	8.61 S	14
21	13 17 32	3.69 S	13
22	11 18 24	9.02 S	13
23	50/3"	> 8.33 N/6	11
24	20 28 29	4.92 S	23

Depth (ft): 55, 60, 65, 70, 75, 80, 85, 90, 95, 100

GENERAL NOTES

Begin Drilling: 03-23-2014 Complete Drilling: 03-23-2014
Drilling Contractor: Wang Testing Services Drill Rig: CME-55 TMR
Driller: R&N Logger: M de los Reyes Checked by: C. Marin
Drilling Method: 2.25" SSA to 12.5', mud rotary thereafter, boring backfilled upon completion

WATER LEVEL DATA

While Drilling: NA
At Completion of Drilling: NA
Time After Drilling: NA
Depth to Water: NA
The stratification lines represent the approximate boundary between soil types; the actual transition may be gradual.

0160461-60X78-S140-BOR.dgn

PARSONS BRINCKERHOFF			
USER NAME = poteld	DESIGNED - PJL	REVISED -	
	CHECKED - AH	REVISED -	
PLOT SCALE = N.T.S.	DRAWN - DCP	REVISED -	
PLOT DATE = 3/23/2016	CHECKED - JIG	REVISED -	

STATE OF ILLINOIS
DEPARTMENT OF TRANSPORTATION

BORING LOGS V
STRUCTURE NO. 016-0461

SHEET NO. S2-140 OF S2-145 SHEETS

F.A.I. RTE.	SECTION	COUNTY	TOTAL SHEETS	SHEET NO.
90/94/290	2014-004 R&B (WB)	COOK	706	417
		CONTRACT NO. 60X78		
		ILLINOIS FED. AID PROJECT		

FILE NAME: pw:\\617479-PWINT.aecomonline.local:AECOM_DS02_NA\Documents\01 Americas\Transportation\60269938 Circle\Phase_II\000_CAD\008_Structural\Structural\Structure_016-1718\Existing Plans\33906-60X93-SXX-Existing205

HBM ENGINEERING GROUP, LLC

USER NAME = ahmad.issa	DESIGNED -	REVISED -	
	CHECKED -	REVISED -	
PLOT SCALE = N.T.S	DRAWN -	REVISED -	
PLOT DATE = 7/26/2018	CHECKED - MI, MAI	REVISED -	

STATE OF ILLINOIS
DEPARTMENT OF TRANSPORTATION

EXISTING RECORD DRAWINGS

F.A.I. RTE.	SECTION	COUNTY	TOTAL SHEETS	SHEET NO.
90/94/290	2014-013R&B-R	COOK	1972	1782
		CONTRACT NO. 60X93		
		ILLINOIS FED. AID PROJECT		

2:28:01 PM

FOR INFORMATION ONLY

Wang Engineering

wangeng@wangeng.com
1145 N Main Street
Lombard, IL 60148
Telephone: 630 953-9928
Fax: 630 953-9938

BORING LOG 0461-B-04

WEI Job No.: 1100-04-01

Client: AECOM
Project: Circle Interchange Reconstruction
Location: Section 17, T39N, R14E of 3rd PM

Datum: NAVD 88
Elevation: 592.89 ft
North: 1898096.29 ft
East: 1172513.70 ft
Station: 1205+67.07
Offset: 29.6569 RT

Page 1 of 3

Depth (ft)	Sample Type	Sample No.	SPT Values (Blws/6 in)	q_u (tsf)	Moisture Content (%)	Elevation (ft)	SOIL AND ROCK DESCRIPTION
						592.4	10-inch thick CONCRETE --PAVEMENT--
						592.1	Black SAND and GRAVEL, some asphalt tar --BASE COURSE--
		1	15 19 13	NP	19		Very loose to dense, black and brown LOAM to fine SAND, trace glass and cinders --FILL--
5		2	5 7 7	NP	13		
		3	2 1 2	NP	21		
		4	2 3 2	NP	17	563.4	Stiff (1.56B), brown and gray SILTY CLAY LOAM, trace gravel
10						562.4	Very soft to soft, gray CLAY to SILTY CLAY, trace gravel
		5	1 0 0	0.25 B	27		
15		6	0 0 0	0.33 B	27		
		7	0 0 0	0.25 B	28		
20		8	0 0 0	0.16 B	20		
		9	0 0 0	0.16 B	26	546.1	Stiff to hard, gray SILTY CLAY, trace gravel
25		10	0 0 2	0.16 B	31		
30		11	0 1 2	0.25 B	27		
		12	1 2 1	0.16 B	26		
35		13	1 2 1	0.41 B	25		
40		14	2 1 1	0.49 B	25		
45		15	2 1 2	0.25 B	26		
50		16	3 6 9	1.56 B	22		

GENERAL NOTES

Begin Drilling: 03-18-2014 Complete Drilling: 03-20-2014
Drilling Contractor: Wang Testing Services Drill Rig: B-57 TMR
Driller: P&P Logger: D. Kolpacki Checked by: C. Marin
Drilling Method: 3.25" HSA to 10', mud rotary thereafter, boring backfilled upon completion

WATER LEVEL DATA

While Drilling: 6.00 ft
At Completion of Drilling: NA
Time After Drilling: 48 hours
Depth to Water: 72.00 ft
The stratification lines represent the approximate boundary between soil types; the actual transition may be gradual.

Wang Engineering

wangeng@wangeng.com
1145 N Main Street
Lombard, IL 60148
Telephone: 630 953-9928
Fax: 630 953-9938

BORING LOG 0461-B-04

WEI Job No.: 1100-04-01

Client: AECOM
Project: Circle Interchange Reconstruction
Location: Section 17, T39N, R14E of 3rd PM

Datum: NAVD 88
Elevation: 592.89 ft
North: 1898096.29 ft
East: 1172513.70 ft
Station: 1205+67.07
Offset: 29.6569 RT

Page 2 of 3

Depth (ft)	Sample Type	Sample No.	SPT Values (Blws/6 in)	q_u (tsf)	Moisture Content (%)	Elevation (ft)	SOIL AND ROCK DESCRIPTION
						531.1	Hard, gray SILTY CLAY LOAM to SILTY LOAM, trace gravel
55		17	5 9 9	5.00 B	15		
60		18	8 12 17	3.53 B	21		
65		19	12 14 15	8.20 S	12		
70		20	14 11 10	8.77 S	13		
75		21	13 25 50	NP	20	521.1	Very dense, gray SAND, SILT and CLAY interbedded --WET--
						516.1	Hard, gray SILTY CLAY LOAM to SILTY LOAM, trace gravel
80		22	11 18 22	4.92 S	12		
85		23	10 18 19	8.61 S	14		
90		24	17 28 44	NP	20		--L_L(%)=NP, P_I(%)=NP-- --%Gravel=4.7-- --%Sand=18.7--90 --%Silt=70.1-- --%Clay=6.5-- --A-4 (0)--
						501.1	Very dense, gray GRAVELLY SAND --WET--
95	SPT	25	50/5"	NP	16		
100	SPT	26	50/4"	NP	10		

GENERAL NOTES

Begin Drilling: 03-18-2014 Complete Drilling: 03-20-2014
Drilling Contractor: Wang Testing Services Drill Rig: B-57 TMR
Driller: P&P Logger: D. Kolpacki Checked by: C. Marin
Drilling Method: 3.25" HSA to 10', mud rotary thereafter, boring backfilled upon completion

WATER LEVEL DATA

While Drilling: 6.00 ft
At Completion of Drilling: NA
Time After Drilling: 48 hours
Depth to Water: 72.00 ft
The stratification lines represent the approximate boundary between soil types; the actual transition may be gradual.

Wang Engineering

wangeng@wangeng.com
1145 N Main Street
Lombard, IL 60148
Telephone: 630 953-9928
Fax: 630 953-9938

BORING LOG 0461-B-04

WEI Job No.: 1100-04-01

Client: AECOM
Project: Circle Interchange Reconstruction
Location: Section 17, T39N, R14E of 3rd PM

Datum: NAVD 88
Elevation: 592.89 ft
North: 1898096.29 ft
East: 1172513.70 ft
Station: 1205+67.07
Offset: 29.6569 RT

Page 3 of 3

Depth (ft)	Sample Type	Sample No.	SPT Values (Blws/6 in)	q_u (tsf)	Moisture Content (%)	Elevation (ft)	SOIL AND ROCK DESCRIPTION
						489.4	--WEATHERED BEDROCK--
						488.4	Strong, light gray, fair rock mass quality, bedded fresh DOLOSTONE, up to 3.5-foot beds, 7-inch joints spacing, horizontal joints with none to more than 0.2-inch greenish gray argillaceous infilling, hard joint wall, with stylolitic surfaces, and moderately vuggy porosity
105		1	RQD				--Run 1 - RECOVERY=100%-- --RQD=65%--
110						479.4	Boring terminated at 113.50 ft
115							
120							
125							

GENERAL NOTES

Begin Drilling: 03-18-2014 Complete Drilling: 03-20-2014
Drilling Contractor: Wang Testing Services Drill Rig: B-57 TMR
Driller: P&P Logger: D. Kolpacki Checked by: C. Marin
Drilling Method: 3.25" HSA to 10', mud rotary thereafter, boring backfilled upon completion

WATER LEVEL DATA

While Drilling: 6.00 ft
At Completion of Drilling: NA
Time After Drilling: 48 hours
Depth to Water: 72.00 ft
The stratification lines represent the approximate boundary between soil types; the actual transition may be gradual.

0160461-60X78-S141-BOR.dgn

PARSONS BRINCKERHOFF	USER NAME = poteld	DESIGNED - PJL	REVISED -	STATE OF ILLINOIS DEPARTMENT OF TRANSPORTATION	BORING LOGS VI STRUCTURE NO. 016-0461	F.A.I. RTE.	SECTION	COUNTY	TOTAL SHEETS	SHEET NO.
		CHECKED - AH	REVISED -			90/94/290	2014-004 R&B (WB)	COOK	706	418
	PLOT SCALE = N.T.S.	DRAWN - DCP	REVISED -					CONTRACT NO. 60X78		
	PLOT DATE = 3/23/2016	CHECKED - JIG	REVISED -		SHEET NO. S2-141 OF S2-145 SHEETS			ILLINOIS FED. AID PROJECT		

HBM ENGINEERING GROUP, LLC	USER NAME = ahmad.issa	DESIGNED -	REVISED -	STATE OF ILLINOIS DEPARTMENT OF TRANSPORTATION	EXISTING RECORD DRAWINGS	F.A.I. RTE.	SECTION	COUNTY	TOTAL SHEETS	SHEET NO.
		CHECKED -	REVISED -			90/94/290	2014-013R&B-R	COOK	1972	1783
	PLOT SCALE = N.T.S	DRAWN -	REVISED -					CONTRACT NO. 60X93		
	PLOT DATE = 7/26/2018	CHECKED - MI, MAI	REVISED -					ILLINOIS FED. AID PROJECT		

FILE NAME: pw:\\617479-PWINT.aecomonline.local:AECOM_DS02_NA\Documents\01 Americas\Transportation\60269938 Circle\Phase_II\000_CAD\008_Structural\Structure_016-1718\Existing Plans\33906-60X93-SXX-Existing206

2:28:08 PM

FOR INFORMATION ONLY

Wang Engineering

wangeng@wangeng.com
1145 N Main Street
Lombard, IL 60148
Telephone: 630 953-9928
Fax: 630 953-9938

BORING LOG 0461-B-05

WEI Job No.: 1100-04-01

Client: AECOM
Project: Circle Interchange Reconstruction
Location: Section 17, T39N, R14E of 3rd PM

Datum: NAVD 88
Elevation: 593.15 ft
North: 1898099.49 ft
East: 1172659.59 ft
Station: 1204+21.15
Offset: 29.1659 RT

Elevation (ft)	SOIL AND ROCK DESCRIPTION	Depth (ft)	Sample Type	Sample No.	SPT Values (Blw/6 in)	q_u (tsf)	Moisture Content (%)
592.0	8-inch thick CONCRETE --PAVEMENT--						
591.6	12-inch thick CRUSHED STONE --BASE COURSE--						
	Medium dense, brown and gray SAND to SANDY LOAM, trace cinders and construction debris --FILL--			1	3 11 30	NP	9
		5		2	7 8 8	NP	10
				3	2 50/4"	NP	8
		10		4	3 3 13	NP	
	--Black, strong odor--			5	2 2 3	NP	22
580.1	Very soft to medium stiff, gray CLAY to SILTY CLAY, trace gravel	15		6	1 3 3	0.41 B	22
				7	0 0 1	0.17 N/6	
		20		8	1 1 2	0.16 B	28
				9	0 0 0	0.16 B	26
		25		10	1 1 2	0.33 B	35

Elevation (ft)	SOIL AND ROCK DESCRIPTION	Depth (ft)	Sample Type	Sample No.	SPT Values (Blw/6 in)	q_u (tsf)	Moisture Content (%)
				11	1 2 2	0.49 B	25
		30		12	1 1 2	0.33 B	24
		35		13	1 1 2	0.33 B	24
		40		14	0 1 2	0.33 B	24
		45		15	1 2 2	0.33 B	25
		50		16	2 3 3	0.74 B	24

GENERAL NOTES

Begin Drilling: 03-19-2014 Complete Drilling: 03-19-2014
Drilling Contractor: Wang Testing Services Drill Rig: CME-55 TMR
Driller: R&N Logger: F. Bozga Checked by: C. Marin
Drilling Method: 2.25" SSA to 12.5', mud rotary thereafter, boring backfilled upon completion

WATER LEVEL DATA

While Drilling: 10.50 ft
At Completion of Drilling: NA
Time After Drilling: NA
Depth to Water: NA
The stratification lines represent the approximate boundary between soil types; the actual transition may be gradual.

Wang Engineering

wangeng@wangeng.com
1145 N Main Street
Lombard, IL 60148
Telephone: 630 953-9928
Fax: 630 953-9938

BORING LOG 0461-B-05

WEI Job No.: 1100-04-01

Client: AECOM
Project: Circle Interchange Reconstruction
Location: Section 17, T39N, R14E of 3rd PM

Datum: NAVD 88
Elevation: 593.15 ft
North: 1898099.49 ft
East: 1172659.59 ft
Station: 1204+21.15
Offset: 29.1659 RT

Elevation (ft)	SOIL AND ROCK DESCRIPTION	Depth (ft)	Sample Type	Sample No.	SPT Values (Blw/6 in)	q_u (tsf)	Moisture Content (%)
536.4	Very stiff to hard, gray SILTY CLAY, trace gravel	55		17	2 4 4	0.90 B	19
		60		18	5 10 14	3.53 B	21
		65		19	7 12 20	5.33 N/6	
	--L_L(%)=24, P_I(%)=14-- --%Gravel=5.3-- --%Sand=23.4--70 --%Silt=56.4-- --%Clay=14.9-- --A-4 (4)--			20	11 17 20	6.54 B	13
519.1	Very dense, gray SILT	75		21	14 26 30	5.49 B	17

Elevation (ft)	SOIL AND ROCK DESCRIPTION	Depth (ft)	Sample Type	Sample No.	SPT Values (Blw/6 in)	q_u (tsf)	Moisture Content (%)
516.4	Hard, gray SILTY CLAY LOAM to SILTY LOAM, trace gravel						
		80		22	14 25 30	4.51 S	12
		85		23	19 27 39	5.08 S	13
		90		24	15 25 29	NP	18
501.4	Very dense, gray GRAVELLY SANDY LOAM						
		95		25	43 50/4"	NP	12
493.1	--Possible Cobbles--	100		26	80/6"	NP	11

GENERAL NOTES

Begin Drilling: 03-19-2014 Complete Drilling: 03-19-2014
Drilling Contractor: Wang Testing Services Drill Rig: CME-55 TMR
Driller: R&N Logger: F. Bozga Checked by: C. Marin
Drilling Method: 2.25" SSA to 12.5', mud rotary thereafter, boring backfilled upon completion

WATER LEVEL DATA

While Drilling: 10.50 ft
At Completion of Drilling: NA
Time After Drilling: NA
Depth to Water: NA
The stratification lines represent the approximate boundary between soil types; the actual transition may be gradual.

Wang Engineering

wangeng@wangeng.com
1145 N Main Street
Lombard, IL 60148
Telephone: 630 953-9928
Fax: 630 953-9938

BORING LOG 0461-B-05

WEI Job No.: 1100-04-01

Client: AECOM
Project: Circle Interchange Reconstruction
Location: Section 17, T39N, R14E of 3rd PM

Datum: NAVD 88
Elevation: 593.15 ft
North: 1898099.49 ft
East: 1172659.59 ft
Station: 1204+21.15
Offset: 29.1659 RT

Elevation (ft)	SOIL AND ROCK DESCRIPTION	Depth (ft)	Sample Type	Sample No.	SPT Values (Blw/6 in)	q_u (tsf)	Moisture Content (%)
	--DIFFICULT DRILLING-- --WEATHERED BEDROCK--						
491.1	--AUGER REFUSAL-- Boring terminated at 102.00 ft						
		105					
		110					
		115					
		120					
		125					

GENERAL NOTES

Begin Drilling: 03-19-2014 Complete Drilling: 03-19-2014
Drilling Contractor: Wang Testing Services Drill Rig: CME-55 TMR
Driller: R&N Logger: F. Bozga Checked by: C. Marin
Drilling Method: 2.25" SSA to 12.5', mud rotary thereafter, boring backfilled upon completion

WATER LEVEL DATA

While Drilling: 10.50 ft
At Completion of Drilling: NA
Time After Drilling: NA
Depth to Water: NA
The stratification lines represent the approximate boundary between soil types; the actual transition may be gradual.

WANGENGINC 1100045.GPJ WANGENG.GDT 5/28/14

0160461-60X78-S142-BOR.dgn

PARSONS BRINCKERHOFF	USER NAME = poteld	DESIGNED - PJL	REVISED -	STATE OF ILLINOIS DEPARTMENT OF TRANSPORTATION	BORING LOGS VII STRUCTURE NO. 016-0461	F.A.I. RTE.	SECTION	COUNTY	TOTAL SHEETS	SHEET NO.
		CHECKED - AH	REVISED -			90/94/290	2014-004 R&B (WB)	COOK	706	419
	PLOT SCALE = N.T.S.	DRAWN - DCP	REVISED -					CONTRACT NO. 60X78		
	PLOT DATE = 3/23/2016	CHECKED - JIG	REVISED -		SHEET NO. S2-142 OF S2-145 SHEETS			ILLINOIS FED. AID PROJECT		

HBM ENGINEERING GROUP, LLC	USER NAME = ahmad.issa	DESIGNED -	REVISED -	STATE OF ILLINOIS DEPARTMENT OF TRANSPORTATION	EXISTING RECORD DRAWINGS	F.A.I. RTE.	SECTION	COUNTY	TOTAL SHEETS	SHEET NO.
		CHECKED -	REVISED -			90/94/290	2014-013R&B-R	COOK	1972	1784
	PLOT SCALE = N.T.S	DRAWN -	REVISED -					CONTRACT NO. 60X93		
	PLOT DATE = 7/26/2018	CHECKED - MI, MAI	REVISED -					ILLINOIS FED. AID PROJECT		

FILE NAME: pw:\\617479-PWINT.aecomonline.local:AECOM_DS02_NA\Documents\01 Americas\Transportation\60269938 Circle\Phase_II\000_CAD\008_Structural\Structure_016-1718\Existing Plans\33906-60X93-SXX-Existing207

2:28:19 PM

FOR INFORMATION ONLY

Wang Engineering
wangeng@wangeng.com
1145 N Main Street
Lombard, IL 60148
Telephone: 630 953-9928
Fax: 630 953-9938

BORING LOG 0461-B-06

WEI Job No.: 1100-04-01

Client: AECOM
Project: Circle Interchange Reconstruction
Location: Section 17, T39N, R14E of 3rd PM

Datum: NAVD 88
Elevation: 592.58 ft
North: 1898094.96 ft
East: 1172855.95 ft
Station: 1202+24.67
Offset: 11.3524 RT

Page 1 of 2

Elevation (ft)	SOIL AND ROCK DESCRIPTION	Depth (ft)	Sample Type	Sample No.	SPT Values (Blw/6 in)	Qu (tsf)	Moisture Content (%)
591.8	10-inch thick CONCRETE --PAVEMENT--						
590.9	12-inch thick CRUSHED STONE --BASE COURSE--						
	Very loose to medium dense, brown SAND and cinders, trace gravel			1	4 5 5	NP	20
		5		2	1 1 1	NP	15
				3	0 0 0	NP	21
		10		4	2 5 2	NP	23
582.1	Very soft to medium stiff, gray CLAY to SILTY CLAY, trace gravel			5	1 2 2	0.90 B	22
		15		6	1 2 2	0.41 B	30
				7	0 1 1	0.25 B	25
		20		8	0 0 0	0.25 B	26
				9	0 1 1	0.16 B	28
		25		10	0 1 1	0.16 B	28
				11	0 1 2	0.25 B	21
		30		12	0 0 0	0.25 B	25
		35		13	1 1 0	0.17 N/6	
		40		14	1 1 2	0.16 B	26
		45		15	1 2 3	0.33 B	27
		50		16	1 3 3	0.57 B	27

GENERAL NOTES

Begin Drilling: 03-25-2014 Complete Drilling: 03-25-2014
Drilling Contractor: Wang Testing Services Drill Rig: B-57 TMR
Driller: P&P Logger: D. Kolpacki Checked by: C. Marin
Drilling Method: 3.25" HSA to 10', mud rotary thereafter, boring backfilled upon completion

WATER LEVEL DATA

While Drilling: ▽ 3.00 ft
At Completion of Drilling: ▼ 87.00 ft
Time After Drilling: NA
Depth to Water: ▼ NA
The stratification lines represent the approximate boundary between soil types; the actual transition may be gradual.

Wang Engineering
wangeng@wangeng.com
1145 N Main Street
Lombard, IL 60148
Telephone: 630 953-9928
Fax: 630 953-9938

BORING LOG 0461-B-06

WEI Job No.: 1100-04-01

Client: AECOM
Project: Circle Interchange Reconstruction
Location: Section 17, T39N, R14E of 3rd PM

Datum: NAVD 88
Elevation: 592.58 ft
North: 1898094.96 ft
East: 1172855.95 ft
Station: 1202+24.67
Offset: 11.3524 RT

Page 2 of 2

Elevation (ft)	SOIL AND ROCK DESCRIPTION	Depth (ft)	Sample Type	Sample No.	SPT Values (Blw/6 in)	Qu (tsf)	Moisture Content (%)
540.6	Stiff to hard, gray SILTY CLAY to SILTY CLAY LOAM, trace to little gravel						
		55		17	4 5 6	1.83 N/6	
		60		18	5 6 7	2.17 N/6	
		65		19	13 16 21	8.36 S	13
526.6	Medium stiff to stiff, gray CLAY, trace gravel						
		70		20	6 7 10	1.64 B	25
		75		21	4 5 6	0.66 B	27
515.6	Hard, gray SILTY CLAY LOAM, trace gravel						
		80		22	11 17 25	7.38 S	14
		85		23	11 18 25	7.63 B	14
505.6	Very dense, gray SILTY LOAM, trace to little gravel --WET--						
		90		24	22 29 50/5	NP	21
	--HARD DRILLING-- --Possible Cobbles-	95		25	50/4	NP	12
495.1	--AUGER REFUSAL-- Boring terminated at 97.50 ft						
		100					

GENERAL NOTES

Begin Drilling: 03-25-2014 Complete Drilling: 03-25-2014
Drilling Contractor: Wang Testing Services Drill Rig: B-57 TMR
Driller: P&P Logger: D. Kolpacki Checked by: C. Marin
Drilling Method: 3.25" HSA to 10', mud rotary thereafter, boring backfilled upon completion

WATER LEVEL DATA

While Drilling: ▽ 3.00 ft
At Completion of Drilling: ▼ 87.00 ft
Time After Drilling: NA
Depth to Water: ▼ NA
The stratification lines represent the approximate boundary between soil types; the actual transition may be gradual.

Wang Engineering
wangeng@wangeng.com
1145 N Main Street
Lombard, IL 60148
Telephone: 630 953-9928
Fax: 630 953-9938

BORING LOG 0461-B-07

WEI Job No.: 1100-04-01

Client: AECOM
Project: Circle Interchange Reconstruction
Location: Section 17, T39N, R14E of 3rd PM

Datum: NAVD 88
Elevation: 598.46 ft
North: 1898107.61 ft
East: 1172998.12 ft
Station: 5202+57.62
Offset: 72.7190 RT

Page 1 of 3

Elevation (ft)	SOIL AND ROCK DESCRIPTION	Depth (ft)	Sample Type	Sample No.	SPT Values (Blw/6 in)	Qu (tsf)	Moisture Content (%)
597.7	9.5-inch thick CONCRETE --PAVEMENT--						
597.1	3-inch thick CRUSHED STONE --BASE COURSE--						
	Loose to medium dense, brown, fine SAND, trace gravel and slag --FILL--			1	5 6 8	NP	11
		5		2	3 6 3	NP	8
				3	3 2 2	NP	12
590.5	Loose, gray and black SILTY LOAM, trace slag --FILL--			4	2 2 2	NP	57
		10		5	1 2 2	NP	47
584.5	Loose, brown SANDY LOAM --FILL--	15		6	4 2 3	NP	22
583.0	Stiff, brown and gray SILTY CLAY LOAM, trace gravel			7	2 2 4	1.89 B	23
580.5	Very soft to medium stiff, gray CLAY to SILTY CLAY, trace gravel			8	1 1 2	0.41 B	25
	--In-Situ Vane Shear, 21.5 feet-- --$S_{u\,undis}$ = 672.1 psf-- --$S_{u\,remold}$ = 517.0 psf-- --Sensitivity = 1.30--	20		1			
		25		9	0 0 3	0.16 B	32
	--In-Situ Vane Shear, 26.5 feet-- --$S_{u\,undis}$ = 827.2 psf-- --$S_{u\,remold}$ = 465.3 psf-- --Sensitivity = 1.78--			2			
		30		10	0 1 1	< 0.25 P	32
	--In-Situ Vane Shear, 34 feet-- --$S_{u\,undis}$ = 1085.7 psf-- --$S_{u\,remold}$ = 465.3 psf-- --Sensitivity = 2.33--			3			
	--In-Situ Vane Shear, 44 feet-- --$S_{u\,undis}$ = 1292.5 psf-- --$S_{u\,remold}$ = 620.4 psf-- --Sensitivity = 2.08--			4			
	--L_L(%)=35, P_I(%)=17-- --%Gravel=5.0-- --%Sand=16.1-- --%Silt=45.7-- --%Clay=33.1-- --A-6 (13)--						
		40		11	0 1 2	< 0.25 P	30
		50		12	1 2 3	0.33 B	26

GENERAL NOTES

Begin Drilling: 10-23-2013 Complete Drilling: 10-24-2013
Drilling Contractor: Wang Testing Services Drill Rig: CME-55 TMR
Driller: R&J Logger: A. Happel Checked by: C. Marin
Drilling Method: 2.25" HSA to 20', mud rotary thereafter, boring backfilled upon completion

WATER LEVEL DATA

While Drilling: ▽ NA
At Completion of Drilling: ▼ tbd
Time After Drilling: NA
Depth to Water: ▼ NA
The stratification lines represent the approximate boundary between soil types; the actual transition may be gradual.

WANGENGINC 1100401-GP_WANGEGEO.GPJ 7/29/14

0160461-60X78-S143-B0R.dgn

PARSONS BRINCKERHOFF			
USER NAME = poteld	DESIGNED - PJL	REVISED -	
	CHECKED - AH	REVISED -	
PLOT SCALE = N.T.S.	DRAWN - DCP	REVISED -	
PLOT DATE = 3/23/2016	CHECKED - JIG	REVISED -	

STATE OF ILLINOIS
DEPARTMENT OF TRANSPORTATION

BORING LOGS VIII
STRUCTURE NO. 016-0461

SHEET NO. S2-143 OF S2-145 SHEETS

F.A.I. RTE.	SECTION	COUNTY	TOTAL SHEETS	SHEET NO.
90/94/290	2014-004 R&B (WB)	COOK	706	420
		CONTRACT NO. 60X78		
		ILLINOIS FED. AID PROJECT		

FILE NAME: pw:\\617479-PWINT.aecomonline.local:AECOM_DS02_NA\Documents\01 Americas\Transportation\60269938 Circle\Phase_II\000_CAD\008_Structural\Structure_016-1718\Existing Plans\33906-60X93-SXX-Existing208

HBM ENGINEERING GROUP, LLC

USER NAME = ahmad.issa	DESIGNED -	REVISED -	
	CHECKED -	REVISED -	
PLOT SCALE = N.T.S	DRAWN -	REVISED -	
PLOT DATE = 7/26/2018	CHECKED - MI, MAI	REVISED -	

STATE OF ILLINOIS
DEPARTMENT OF TRANSPORTATION

EXISTING RECORD DRAWINGS

F.A.I. RTE.	SECTION	COUNTY	TOTAL SHEETS	SHEET NO.
90/94/290	2014-013R&B-R	COOK	1972	1785
		CONTRACT NO. 60X93		
		ILLINOIS FED. AID PROJECT		

2:28:27 PM

FOR INFORMATION ONLY

BORING LOG 0461-B-07

Wang Engineering
wangeng@wangeng.com
1145 N Main Street
Lombard, IL 60148
Telephone: 630 953-9928
Fax: 630 953-9938

WEI Job No.: 1100-04-01
Client: AECOM
Project: Circle Interchange Reconstruction
Location: Section 17, T39N, R14E of 3rd PM

Datum: NAVD 88
Elevation: 598.46 ft
North: 1898107.61 ft
East: 1172998.12 ft
Station: 5202+57.62
Offset: 72.7190 RT

Page 3 of 3

Elevation (ft)	SOIL AND ROCK DESCRIPTION	Depth (ft)
	Strong, light gray, excellent rock mass quality, bedded fresh DOLOSTONE, up to 5-foot beds. 17-inch joints spacing, horizontal and vertical joints with less than 0.2-inch infilling, hard joint wall, with stylolitic surfaces, and moderately vuggy porosity.	
	--Run 1 - RECOVERY=100%-- --RQD=94%--	105
488.5	Boring terminated at 100.00 ft	110
		115
		120
		125

Sample Type: 1 CORE
Sample No.: 1
SPT Values (Blows/6 in): CORE
Qu (tsf)
Moisture Content (%)

GENERAL NOTES

Begin Drilling: 10-23-2013 Complete Drilling: 10-24-2013
Drilling Contractor: Wang Testing Services Drill Rig: CME-55 TMR
Driller: R&J Logger: A. Happel Checked by: C. Marin
Drilling Method: 2.25" HSA to 20', mud rotary thereafter, boring backfilled upon completion

WATER LEVEL DATA

While Drilling: NA
At Completion of Drilling: tbd
Time After Drilling: NA
Depth to Water: NA
The stratification lines represent the approximate boundary between soil types; the actual transition may be gradual.

BORING LOG 0461-B-08A

Wang Engineering
wangeng@wangeng.com
1145 N Main Street
Lombard, IL 60148
Telephone: 630 953-9928
Fax: 630 953-9938

WEI Job No.: 1100-04-01
Client: AECOM
Project: Circle Interchange Reconstruction
Location: Section 17, T39N, R14E of 3rd PM

Datum: field
Elevation: 604.50 ft
North: 1898072.88 ft
East: 1173175.26 ft
Station:
Offset:

Page 1 of 1

Elevation (ft)	SOIL AND ROCK DESCRIPTION	Depth (ft)
604.0	11-inch thick ASPHALT --PAVEMENT--	
602.3	11-inch thick CONCRETE --PAVEMENT--	
601.5	Medium dense, brown GRAVELLY SANDY LOAM, some cinders --FILL--	
	Loose to medium dense, brown SANDY LOAM, trace to little gravel --FILL--	5
596.5	Loose, dark brown SILTY LOAM --Saturated--	10
594.0	Stiff to very stiff, brown and gray SILTY CLAY, trace gravel	15
589.0	Soft, gray CLAY to SILTY CLAY, trace gravel	20
		25
578.5	Stiff to very stiff, gray SILTY CLAY, trace gravel	30
	--AUGER REFUSAL-- --Obstruction at 37 feet-- --Boring relocated 40 feet west across the road--	35
567.5	Boring terminated at 37.00 ft	40
		45
		50

Sample Type: 1 2 3 4 5 6 7 8 9 10
Sample No.: 1 2 3 4 5 6 7 8 9 10
SPT Values (Blows/6 in): 28 15 10; 7 4 3; 4 8 10; 2 2 4; 2 2 3; 2 3 3; 0 0 2; 0 0 3; 0 0 2; 0 0 2
Qu (tsf): NP; NP; NP; NP; 2.21 B; 1.15 B; 0.33 B; 0.25 P; 0.33 B; 0.33 B
Moisture Content (%): 13; 20; 12; 22; 22; 24; 23; 26; 27; 23

Sample Type: 11 12 13
Sample No.: 11 12 13
SPT Values (Blows/6 in): 1 1 2; 2 3 3; 3 9 10
Qu (tsf): 0.33 B; 1.39 B; 2.54 B
Moisture Content (%): 33; 19; 23

GENERAL NOTES

Begin Drilling: 02-24-2014 Complete Drilling: 02-24-2014
Drilling Contractor: Wang Testing Services Drill Rig: CME-55 TMR
Driller: R&K Logger: D. Kolpacki Checked by: CLM(-coord)
Drilling Method: 2.25" HSA to 15', mud rotary thereafter, boring backfilled upon completion

WATER LEVEL DATA

While Drilling: 8.75 ft
At Completion of Drilling: NA
Time After Drilling: NA
Depth to Water: NA
The stratification lines represent the approximate boundary between soil types; the actual transition may be gradual.

BORING LOG 0461-B-08B

Wang Engineering
wangeng@wangeng.com
1145 N Main Street
Lombard, IL 60148
Telephone: 630 953-9928
Fax: 630 953-9938

WEI Job No.: 1100-04-01
Client: AECOM
Project: Circle Interchange Reconstruction
Location: Section 17, T39N, R14E of 3rd PM

Datum: NAVD 88
Elevation: 592.61 ft
North: 1898101.61 ft
East: 1173154.73 ft
Station: 5201+00.40
Offset: 64.1086 RT

Page 1 of 2

Elevation (ft)	SOIL AND ROCK DESCRIPTION	Depth (ft)
	Drilled without sampling to 37 feet	
		5
		10
		15
		20
		25
		30
		35
555.6	Very soft to medium stiff, gray CLAY to SILTY CLAY, trace gravel	40
		45
		50

Sample Type: 14 15 16
Sample No.: 14 15 16
SPT Values (Blows/6 in): 0 1 1; 1 1 2; 2 2 3
Qu (tsf): 0.16 B; 0.41 B; 0.83 N/0
Moisture Content (%): 26; 24

GENERAL NOTES

Begin Drilling: 02-25-2014 Complete Drilling: 02-25-2014
Drilling Contractor: Wang Testing Services Drill Rig: CME-55 TMR
Driller: R&K Logger: D. Kolpacki Checked by: C. Marin
Drilling Method: 2.25" HSA to 15', mud rotary thereafter, boring backfilled upon completion

WATER LEVEL DATA

While Drilling: NA
At Completion of Drilling: 77.00 ft
Time After Drilling: NA
Depth to Water: NA
The stratification lines represent the approximate boundary between soil types; the actual transition may be gradual.

0160461-60X78-S144-BOR-dgn

PARSONS BRINCKERHOFF	USER NAME = poteld	DESIGNED - PJL	REVISED -
		CHECKED - AH	REVISED -
	PLOT SCALE = N.T.S.	DRAWN - DCP	REVISED -
	PLOT DATE = 3/23/2016	CHECKED - JIG	REVISED -

STATE OF ILLINOIS
DEPARTMENT OF TRANSPORTATION

BORING LOGS IX
STRUCTURE NO. 016-0461
SHEET NO. S2-144 OF S2-145 SHEETS

F.A.I. RTE.	SECTION	COUNTY	TOTAL SHEETS	SHEET NO.
90/94/290	2014-004 R&B (WB)	COOK	706	421
		CONTRACT NO. 60X78		
		ILLINOIS FED. AID PROJECT		

FILE NAME: pw:\\617479-PWINT.aecomonline.local:AECOM_DS02_NA\Documents\01 Americas\Transportation\60269938 Circle\Phase_II\000_CAD\008_Structural\Structure_016-1718\Existing Plans\33906-60X93-SXX-Existing209

HBM ENGINEERING GROUP, LLC	USER NAME = ahmad.issa	DESIGNED -	REVISED -
		CHECKED -	REVISED -
	PLOT SCALE = N.T.S	DRAWN -	REVISED -
	PLOT DATE = 7/26/2018	CHECKED - MI. MAI	REVISED -

STATE OF ILLINOIS
DEPARTMENT OF TRANSPORTATION

EXISTING RECORD DRAWINGS

F.A.I. RTE.	SECTION	COUNTY	TOTAL SHEETS	SHEET NO.
90/94/290	2014-013R&B-R	COOK	1972	1786
		CONTRACT NO. 60X93		
		ILLINOIS FED. AID PROJECT		

2:28:35 PM

FOR INFORMATION ONLY

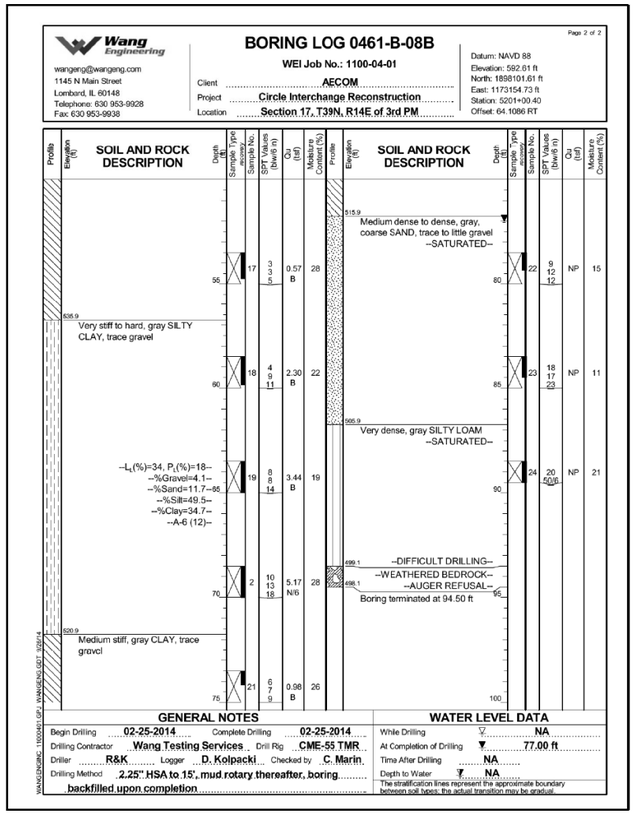

Wang Engineering

wangeng@wangeng.com
1145 N Main Street
Lombard, IL 60148
Telephone: 630 953-9928
Fax: 630 953-9938

BORING LOG 0461-B-08B

WEI Job No.: 1100-04-01

Client: AECOM
Project: Circle Interchange Reconstruction
Location: Section 17, T39N, R14E of 3rd PM

Datum: NAVD 88
Elevation: 592.61 ft
North: 1898101.61 ft
East: 1173154.73 ft
Station: 5201+00.40
Offset: 64.1086 RT

Page 2 of 2

Elevation (ft)	SOIL AND ROCK DESCRIPTION	Depth (ft)	Sample Type	Sample No.	SPT Values (Blws/6 in)	q_u (tsf)	Moisture Content (%)
636.9	Very stiff to hard, gray SILTY CLAY, trace gravel	55		17	3 3 3	0.57 B	28
		60		18	4 9 11	2.30 B	22
	–L_L(%)=34, P_I(%)=18– –%Gravel=4.1– –%Sand=11.7–55 –%Silt=49.5– –%Clay=34.7– –A-6 (12)–			19	8 8 14	3.44 B	19
620.9	Medium stiff, gray CLAY, trace gravel	70		2	10 13 18	5.17 N/6	28
		75		21	6 7 9	0.98 B	26
515.9	Medium dense to dense, gray, coarse SAND, trace to little gravel –SATURATED–	80		22	9 12 12		NP 15
		85		23	18 17 23		NP 11
505.9	Very dense, gray SILTY LOAM –SATURATED–	90		24	20 50/6		NP 21
499.1	–DIFFICULT DRILLING–						
498.1	–WEATHERED BEDROCK– –AUGER REFUSAL– Boring terminated at 94.50 ft	95					
		100					

GENERAL NOTES

Begin Drilling: 02-25-2014 Complete Drilling: 02-25-2014
Drilling Contractor: Wang Testing Services Drill Rig: CME-55 TMR
Driller: R&K Logger: D. Kolpacki Checked by: C. Marin
Drilling Method: 2.25" HSA to 15', mud rotary thereafter, boring backfilled upon completion

WATER LEVEL DATA

While Drilling: NA
At Completion of Drilling: 77.00 ft
Time After Drilling: NA
Depth to Water: NA

The stratification lines represent the approximate boundary between soil types; the actual transition may be gradual.

WANGDBORG_1100040B1.GPJ WANGENG.GDT 3/29/14

0160461-60X78-S145-BOR.dgn

PARSONS BRINCKERHOFF	USER NAME = poteld	DESIGNED - PJL	REVISED -	STATE OF ILLINOIS DEPARTMENT OF TRANSPORTATION	BORING LOGS X STRUCTURE NO. 016-0461	F.A.I. RTE.	SECTION	COUNTY	TOTAL SHEETS	SHEET NO.
		CHECKED - AH	REVISED -			90/94/290	2014-004 R&B (WB)	COOK	706	422
	PLOT SCALE = N.T.S.	DRAWN - DCP	REVISED -					CONTRACT NO. 60X78		
	PLOT DATE = 3/23/2016	CHECKED - JIG	REVISED -		SHEET NO. S2-145 OF S2-145 SHEETS			ILLINOIS FED. AID PROJECT		

HBM ENGINEERING GROUP, LLC	USER NAME = ahmad.issa	DESIGNED -	REVISED -	STATE OF ILLINOIS DEPARTMENT OF TRANSPORTATION	EXISTING RECORD DRAWINGS	F.A.I. RTE.	SECTION	COUNTY	TOTAL SHEETS	SHEET NO.
		CHECKED -	REVISED -			90/94/290	2014-013R&B-R	COOK	1972	1787
	PLOT SCALE = N.T.S	DRAWN -	REVISED -					CONTRACT NO. 60X93		
	PLOT DATE = 7/26/2018	CHECKED - MI, MAI	REVISED -					ILLINOIS FED. AID PROJECT		

FILE NAME: pw:\\617479-PWINT.aecomonline.local:AECOM_DS02_NA\Documents\01 Americas\Transportation\60269938 Circle\Phase_II\000_CAD\008_Structural\Structure_016-1718\Existing Plans\33906-60X93-SXX-Existing210

2:28:43 PM

FOR INFORMATION ONLY

KAM GUPTA - SCHAUMBURG

FOR INDEX OF SHEETS
SEE SHEET NO 2

STATE OF ILLINOIS
DEPARTMENT OF TRANSPORTATION
DIVISION OF HIGHWAYS

PLANS FOR PROPOSED
FEDERAL AID INTERSTATE HIGHWAY

CIRCLE INTERCHANGE

F.A.I. ROUTE 94
SECTION 1975-117-R
PROJECT I-IX-94-3(239)51
C-91-114-79

F.A.P. ROUTE 411
SECTION 1977-116-R
PROJECT IX-411-5(3)
C-91-229-75

COOK COUNTY

"I" PORTION "Ix" PORTION

BEGIN PROJECT I-Ix-94-3(239)51
SECTION 1975-117-R
STA. 346 + 00
BEGIN IMPROVEMENT

END PROJECT I-Ix-94-3(239)-
SECTION 1975-117-R
BEGIN PROJECT Ix-411-5(3)
SECTION 1977-116-R
STA. 373 + 03.56

STATION EQUATIONS

EASTBOUND
STA. 353 + 77.15 BACK =
STA. 353 + 77.23 AHEAD

WESTBOUND
STA. 352 + 62.70 BACK =
STA. 352 + 62.84 AHEAD

END PROJECT Ix-411-5(3)
SECTION 1977-116-R
STA. 388 + 50
END IMPROVEMENT

CIRCLE INTERCHANGE STRUCTURE, MAINLINE AND RAMPS, INCLUDES REPAIR OF SUBSTRUCTURE AND SUPERSTRUCTURE, REMOVAL AND REPLACEMENT OF DECK SPANS WHICH CARRIES EIGHT LANES OF F.A.I. RTE. 94 (EISENHOWER EXPRESSWAY) OVER DAN RYAN EXPRESSWAY THRU THE U.S. POST OFFICE BLDG., OVER R.R. SPURS, CHICAGO RIVER, AND FRANKLIN ST.

APPROVED
FOR STRUCTURAL ADEQUACY ONLY

GROSS LENGTH OF IMPROVEMENT = 4,249.92 LIN. FT. 0.805 MILES
NET LENGTH OF IMPROVEMENT = 4,249.92 LIN. FT. 0.805 MILES

NET LENGTH OF PROJECTS
I-Ix-94-3(239)51 = 2,703.48 FT. (0.512 MILES)
Ix-411-5(3) = LENGTH 1,546.44 FT. (0.293 MILES)

REVISED SET
8-5-20

CONTRACT NO. 33906

COOK COUNTY SECTION

PC-91-230-75
P-91-017-77

LOCATION OF SECTION INDICATED THUS:

STATE OF ILLINOIS
DEPARTMENT OF TRANSPORTATION
DIVISION OF HIGHWAYS

SUBMITTED 5-2 1977
EXAMINED 3-26 1980
PASSED 3-20 1980
APPROVED 3-20 1980

HBM ENGINEERING GROUP, LLC	USER NAME = ahmad.issa	DESIGNED -	REVISED -	STATE OF ILLINOIS DEPARTMENT OF TRANSPORTATION	EXISTING RECORD DRAWINGS
		CHECKED -	REVISED -		
	PLOT SCALE = N.T.S	DRAWN -	REVISED -		
	PLOT DATE = 7/26/2018	CHECKED - MI, MAI	REVISED -		

F.A.I. RTE.	SECTION	COUNTY	TOTAL SHEETS	SHEET NO.
90/94/290	2014-013R&B-R	COOK	1972	1788
		CONTRACT NO. 60X93		
		ILLINOIS	FED. AID PROJECT	

FILE NAME: pw:\\617479-PWINT.aecomonline.local:AECOM_DS02_NA\Documents\01 Americas\Transportation\60269938 Circle\Phase_II\000_CAD\008_Structural\Structure_016-1718\Existing Plans\33906-60X93-SXX-Existing300

2:28:51 PM

FOR INFORMATION ONLY

INDEX OF SHEETS

SHEET NO.		STATE STANDARDS STANDARD NO.
1	TITLE SHEET	1686-4
2	INDEX OF SHEETS, STATE STANDARDS	1886-8
3	GENERAL NOTES	2347-1
4-11	SUMMARY OF QUANTITIES	2116-2
12	LOCATION OF IMPROVEMENT	
13	TYPICAL CROSS SECTIONS-ROADWAY AND CONCRETE BARRIER WALL DETAIL	2130-6
14	DELETED	2168-9
15-24	ROADWAY PLANS	2230-13
25-26	ROADWAY DETAILS	
26A,B,C	TEMPORARY CONC.BARRIER, BARRIER DELINEATOR DETAILS & FRAME & GRATE,TYPE V	2256-8
27-29	GENERAL LOCATION-BRIDGE PLANS	
30-35	NORTH-EAST RAMP	2259-6
36-40	WEST-NORTH RAMP	2298-5
41-47	NORTH-WEST RAMP	2299-8
48-56	EAST-NORTH RAMP	
57-69	SOUTH-EAST RAMP	2300-2
70-85	WEST-SOUTH RAMP	2319-3
(INCLS.93A) 86-94	JOINT DETAILS	2320-3
95-97	EXPANSION BEARINGS	
98-105	ABUTMENT 1 TO BENT C1	2323-5
106-111	BENT C1 TO BENT C4 (INCLS. 106A, 106B, 113 A)	2326-3
112-120	BENT C4 TO BENT C9	2327-5
121-131	BENT C9 TO BENT C12	
132-144	BENT C12 TO BENT C17	
145-151	I-90 UNDER U.S. POST OFFICE	2336-2
152-153	CANAL STREET RAMPS AND APPROACH STRUCTURES	
154-155	LOWER DECK UNDER THE POST OFFICE	2337-1
156-158	VIADUCT STRUCTURE - POST OFFICE TO RIVER	2340-9
159-161	WELLS PLAZA STRUCTURE(INCLS. 161 A THRU 161 Z, 161 AA THRU 161 EE)	2341-1
(SH.162 Deleted) 162,A	PIER REPAIRS	TS-2147-6
163-183,A	BASCULE BRIDGE	
184-189	PAVEMENT MARKING	TS-2173-3
(INCLS. 139A) 190-218,A	TRAFFIC STAGING, CONTROL AND PROTECTION	TS-2342
219-271	STAGING PLANS	
(INCLS.226A,B&C) 272-282	SIGNAL/WIRE PLANS	
(INCLS.278A) 283-290	LIGHTING PLANS	

REV. DRAWN RCS

STATE OF ILLINOIS
DEPARTMENT OF TRANSPORTATION
CIRCLE INTERCHANGE
EXISTING RECORD DRAWINGS

FILE NAME: pw:\\617479-PWINT.aecomonline.local:AECOM_DS02_NA\Documents\01 Americas\Transportation\60269938 Circle\Phase_II\000_CAD\008_Structural\Structure_016-1718\Existing Plans\33906-60X93-SXX-Existing301

2:28:59 PM

HBM ENGINEERING GROUP, LLC

USER NAME = ahmad.issa	DESIGNED -	REVISED -
	CHECKED -	REVISED -
PLOT SCALE = N.T.S	DRAWN -	REVISED -
PLOT DATE = 7/26/2018	CHECKED - MI, MAI	REVISED -

STATE OF ILLINOIS
DEPARTMENT OF TRANSPORTATION

EXISTING RECORD DRAWINGS

F.A.I. RTE.	SECTION	COUNTY	TOTAL SHEETS	SHEET NO.
90/94/290	2014-013R&B-R	COOK	1972	1789
		CONTRACT NO. 60X93		
		ILLINOIS	FED. AID PROJECT	

FOR INFORMATION ONLY

F.A.I. 94		
FED. ROAD DIV. NO. 7	ILLINOIS	

GENERAL NOTES

1. ALL FRAMES AND GRATES AND DELINEATORS DAMAGED BY THE CONTRACTOR DURING CONSTRUCTION WILL BE REPLACED BY THE CONTRACTOR AT HIS EXPENSE.

2. PAVEMENT MARKING: ALL PAVEMENT MARKING PROPOSED WITHIN THE WORK AREA SHALL BE COMPLETED PRIOR TO CONSTRUCTION PHASE CHANGE.

3. ADDED EXPENSE WHICH WILL BE INVOLVED IN CONNECTING EXISTING DRAIN TILES, DRAINAGE STRUCTURES, PIPE CULVERTS OR STORM SEWERS TO THE PROPOSED DRAINAGE SYSTEM SHALL BE CONSIDERED INCIDENTAL TO THE CONTRACT OR AS NOTED ON PLAN.

4. FLUORESCENT VEST: ALL CONSTRUCTION PERSONNEL WILL BE REQUIRED TO WEAR FLUORESCENT ORANGE VEST AT ALL TIMES WHILE ON THE CONSTRUCTION SITE. COMPLIANCE WITH THIS REQUIREMENT SHALL BE CONSIDERED AS INCIDENTAL TO THE CONTRACT.

5. THE STANDARD DRAWINGS LISTED IN THE PLAN INDEX IS INTENDED TO BE THE LATEST REVISION. IT SHALL HOLD PRECEDENCE OVER EARLIER REVISIONS THAT MAY BE REFERRED TO ELSEWHERE IN THE PLANS OR IN THE SPECIAL PROVISIONS.

6. FIELD INSPECTION PRIOR TO BIDDING: IT IS THE CONTRACTOR'S RESPONSIBILITY TO ASCERTAIN EXISTING FIELD CONDITIONS BEFORE BIDDING ON THE PROJECT SPECIFICALLY AS THEY RELATE TO LUMP SUM ITEMS.

7. DELETED

8. QUANTITIES: QUANTITIES SHOWN ON THE PLANS ARE BASED ON FIELD INSPECTION AT THE TIME OF PLAN PREPARATION AND ARE TO BE USED FOR PREPARATION PROPOSALS. HOWEVER, AS DETERMINED BY THE ENGINEER, QUANTITIES MAY CHANGE BASED UPON CONDITIONS UNCOVERED AT THE TIME OF CONSTRUCTION.

9. SCALE: DO NOT SCALE PLANS FOR CONSTRUCTION DIMENSIONS.

10. NIGHT OPERATIONS: WHEN ARTIFICIAL LIGHTING IS UTILIZED IN NIGHT OPERATIONS THE CONTRACTOR SHALL EXERCISE THE UTMOST PRECAUTION IN PREVENTING ADVERSE VISIBILITY TO THE MOTORING PUBLIC AS WELL AS THE ADJOINING RESIDENTIAL AREAS.

11. FENCE: EXISTING FENCE THAT HAS TO BE DISCONNECTED AND/OR REMOVED FOR THE CONTRACTOR'S OPERATIONS OR DAMAGED BY THE CONTRACTOR SHALL BE RECONNECTED AND/OR REPLACED IN KIND AT NO ADDITIONAL COST TO THE CONTRACT.

12. ANY DAMAGE TO THE REINFORCEMENT BARS AS A RESULT OF THE CONTRACTOR'S CONCRETE SAWING AND/OR CONCRETE REMOVAL OPERATION SHALL BE CORRECTED BY THE CONTRACTOR AT NO ADDITIONAL COST TO THE CONTRACT.

13. ALL TRAFFIC CONTROL AND PROTECTION DEVICES SHALL BE CLEANED AS NECESSARY THROUGHOUT THE DURATION OF THE CONTRACT.

14. TRAFFIC CONDITIONS, ACCIDENTS AND OTHER UNFORESEEN EMERGENCY CONDITIONS MAY REQUIRE THE ENGINEER TO RESTRICT, MODIFY OR REMOVE LANE CLOSURES OR CHANNELIZATION SHOWN IN THE PLANS. THE CONTRACTOR SHALL MAKE THE NECESSARY ADJUSTMENTS AS DIRECTED BY THE ENGINEER WITHOUT DELAY. THE CONTRACTOR SHALL RESPOND WITHIN THIRTY (30) MINUTES FROM THE TIME OF NOTIFICATION BY THE ENGINEER TO ANY REQUEST MADE BY THE ENGINEER FOR CORRECTION.

15. WHENEVER EXISTING CONCRETE IS TO BE REMOVED AND NEW CONCRETE IS TO BE PLACED ADJACENT TO IT, EXISTING REINFORCEMENT SHALL BE CLEANED AND EXTENDED INTO THE NEW CONSTRUCTION. COST OF THIS WORK SHALL BE CONSIDERED INCIDENTAL TO THE CONTRACT.

16. EQUIPMENT: ALL DISTRIBUTORS FOR BITUMINOUS PRIMING AND SEAL COATING OPERATIONS SHALL BE EQUIPPED WITH SHIELDS TO PREVENT CONTAMINATION OF ADJACENT HIGHWAY APPURTENANCES. SHIELDS SHALL MEET WITH THE ENGINEER'S APPROVAL.

17. BARRICADES: THE CONTRACTOR WILL PROVIDE AND INSTALL TWO (2) WEIGHTED SAND BAGS ON EACH BARRICADE USED, TYPE I OR TYPE II.

18. STORAGE SITE: THE STORAGE SITE WITHIN THE R.O.W. OF IMPROVEMENT, FOR SALVAGED GUARD RAIL, FRAMES AND GRATES SHALL BE RESTORED TO ORIGINAL CONDITION BY THE CONTRACTOR. THIS ITEM WILL NOT BE PAID FOR SEPARATELY BUT CONSIDERED INCIDENTAL TO THE CONTRACT.

19. ASPHALT SAWING: THE COST OF SAWING ASPHALT SURFACES SHALL BE CONSIDERED INCIDENTAL TO THE ITEM OF WORK BEING PERFORMED.

20. SAWING OF PORTLAND CEMENT CONCRETE PAVEMENT OR DECK WILL NOT BE PAID FOR SEPARATELY BUT SHALL BE CONSIDERED INCIDENTAL TO THE ITEMS IN WHICH SAWING IS REQUIRED.

21. WHEN RESURFACING ADJACENT TO JOINT MODIFICATION, THE CONTRACTOR WILL BE REQUIRED TO TAKE SPECIAL CARE WHEN COMPACTING THE BITUMINOUS MATERIALS. THE METHODS USED FOR COMPACTING SHALL MEET THE APPROVAL OF THE ENGINEER.

22. FULL DEPTH PATCH (PAVEMENT AND BRIDGES): THE CONTRACTOR WILL NOT BE ALLOWED TO BEND REINFORCEMENT BARS FROM THE ORIGINAL POSITION.

23. DRAINAGE STRUCTURE GRADES SHALL BE VERIFIED IN THE FIELD PRIOR TO INSTALLATION OF DRAINAGE ITEMS.

24. IN ORDER TO PREVENT FRACTURE OF THE DECK, ALL HAND AND MECHANICAL TOOLS USED FOR REMOVING THE SURFACE CONCRETE FROM THE BRIDGE DECKS SHALL BE LIMITED TO 25 POUNDS UNLESS OTHERWISE APPROVED BY THE ENGINEER OR INCLUDED IN SPECIAL PROVISIONS.

25. UNLESS OTHERWISE DIRECTED BY THE ENGINEER, RESURFACING SHALL EXTEND FACE TO FACE OF CURBS.

26. PAVING ASPHALT (PAF-2) SHALL BE USED IN SEALING EDGES OF PROPOSED RESURFACING THAT TERMINATE WITH THE CURB, GUTTER OF CONCRETE WALL OR RAILING. THIS ITEM OF WORK WILL BE CONSIDERED AS INCIDENTAL TO THE ITEM OF BITUMINOUS CONCRETE SURFACE COURSE CLASS I.

27. WHERE BEARING ADJUSTMENTS ARE REQUIRED AND JACKING IS NECCSSARY IN PERFORMANCE OF THIS WORK, THE CONTRACTOR SHALL SCHEDULE THE WORK SO THAT THE BEARING ADJUSTMENTS ARE COMPLETED PRIOR TO PLACEMENT OF NEOPRENE EXPANSION JOINTS ABOVE THESE LOCATIONS.

28. PLAN DIMENSIONS AND DETAILS RELATIVE TO EXISTING STRUCTURE HAVE BEEN TAKEN FROM EXISTING PLANS AND ARE SUBJECT TO NORMAL CONSTRUCTION VARIATIONS. IT SHALL BE THE CONTRACTOR'S RESPONSIBILITY TO VERIFY SUCH DIMENSIONS PERTINENT TO HIS FIELD AND MAKE NECESSARY ADJUSTMENTS WITHOUT DELAY TO ANY CONTRACT WORK RESULTING FROM VARIATIONS OF MATERIALS. SUCH VARIATIONS SHALL NOT BE CONSIDERED FOR ADDITIONAL COMPENSATION.
HOWEVER, THE CONTRACTOR WILL BE PAID FOR THE QUANTITY ACTUALLY FURNISHED AT THE UNIT PRICE BID FOR THE ITEM.

REV. 1-18-80 C.W.

STATE OF ILLINOIS
DEPARTMENT OF TRANSPORTATION
CHIEF ENGINEER

USER NAME = ahmad.issa	DESIGNED -	REVISED -	
	CHECKED -	REVISED -	
PLOT SCALE = N.T.S	DRAWN -	REVISED -	
PLOT DATE = 7/26/2018	CHECKED - MI. MAI	REVISED -	

HBM ENGINEERING GROUP, LLC

STATE OF ILLINOIS
DEPARTMENT OF TRANSPORTATION

EXISTING RECORD DRAWINGS

F.A.I. RTE.	SECTION	COUNTY	TOTAL SHEETS	SHEET NO.
90/94/290	2014-013R&B-R	COOK	1972	1790
		CONTRACT NO. 60X93		
		ILLINOIS FED. AID PROJECT		

FILE NAME: pw:\\617479-PWINT.aecomonline.local:AECOM_DS02_NA\Documents\01 Americas\Transportation\60269938 Circle\Phase_II\000_CAD\008_Structural\Structural\Structure_016-1718\Existing Plans\33906-60X93-SXX-Existing302

2:29:08 PM

FOR INFORMATION ONLY

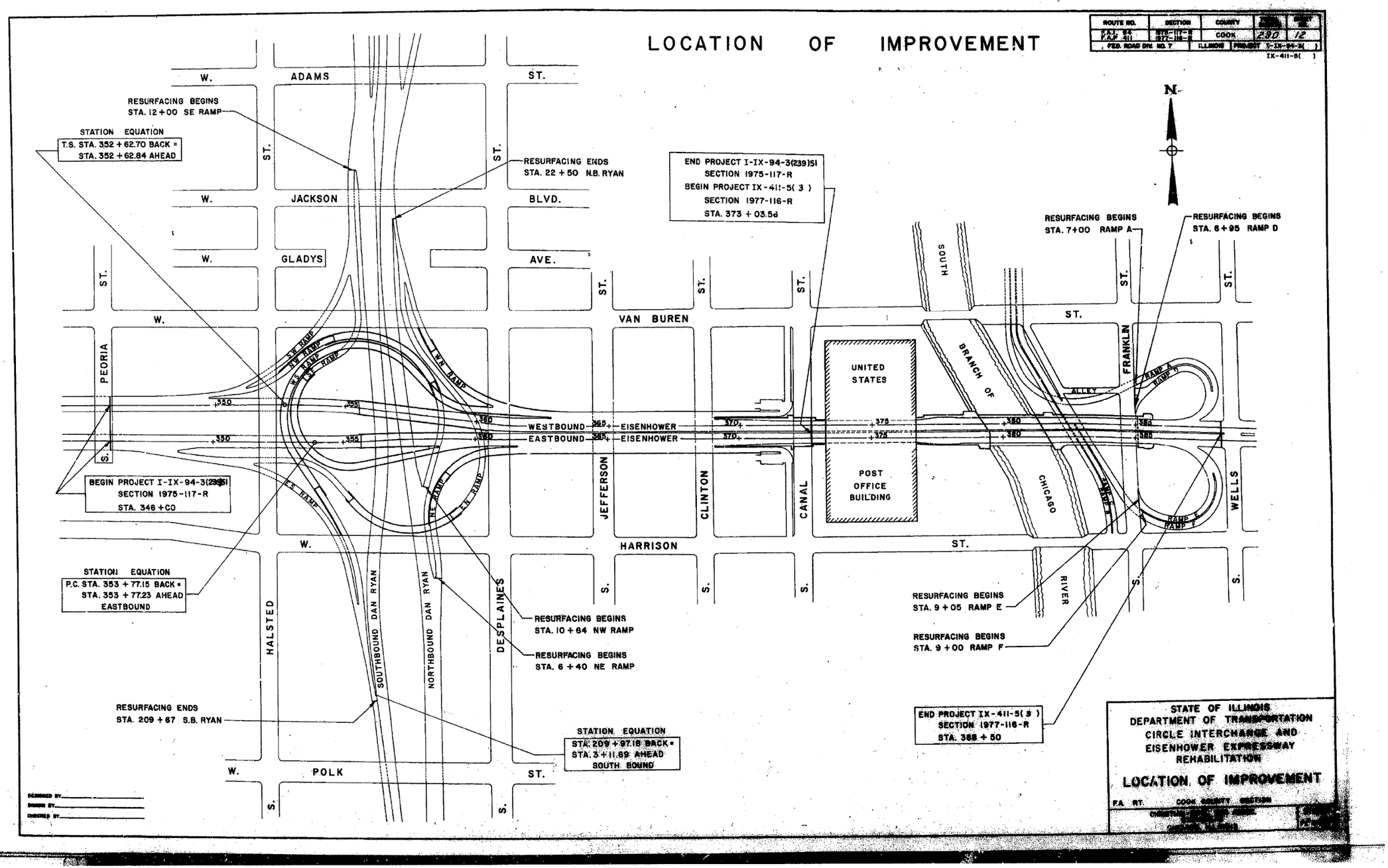

FILE NAME: pw:\\617479-PWINT.aecomonline.local:AECOM_DS02_NA\Documents\01 Americas\Transportation\60269938 Circle\Phase_II\000_CAD\008_Structural\Structure_016-1718\Existing Plans\33906-60X93-SXX-Existing303

2:29:17 PM

HBM ENGINEERING GROUP, LLC	USER NAME = ahmad.issa	DESIGNED -	REVISED -	STATE OF ILLINOIS DEPARTMENT OF TRANSPORTATION	EXISTING RECORD DRAWINGS	F.A.I. RTE.	SECTION	COUNTY	TOTAL SHEETS / SHEET NO.
		CHECKED -	REVISED -			90/94/290	2014-013R&B-R	COOK	1972 / 1791
	PLOT SCALE = N.T.S	DRAWN -	REVISED -					CONTRACT NO. 60X93	
	PLOT DATE = 7/26/2018	CHECKED - MI, MAI	REVISED -					ILLINOIS	FED. AID PROJECT

FOR INFORMATION ONLY

ROUTE NO.	SECTION	COUNTY	TOTAL SHEETS	SHEET NO.
F.A.I. RT. 94	1975-117-R	COOK	290	15
FED. ROAD DIV. NO. 7	ILLINOIS	PROJECT I-IX-94-3		

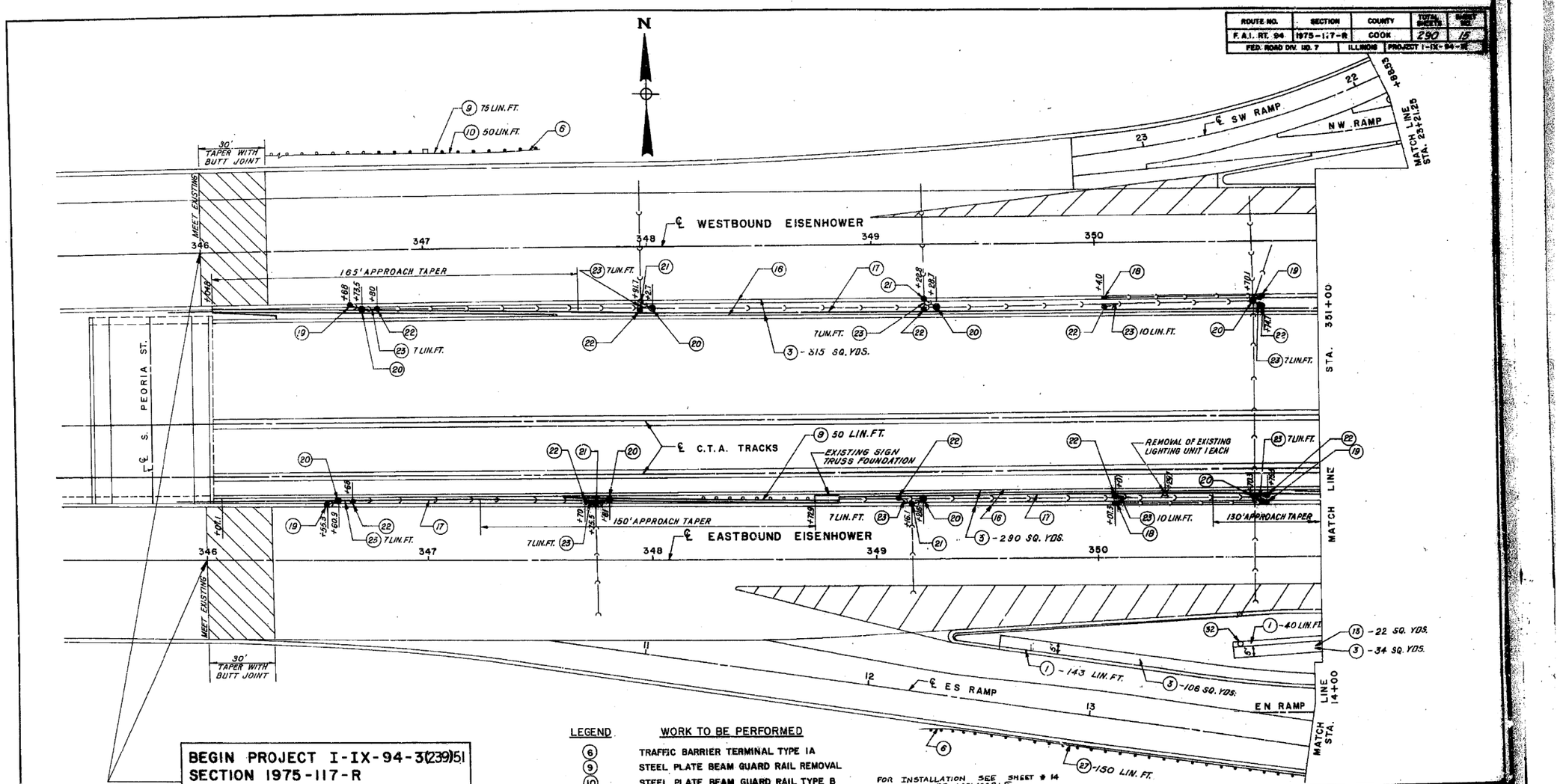

FILE NAME: pw:\\617479-PWINT.aecomonline.local:AECOM_DS02_NA\Documents\01 Americas\Transportation\60269938 Circle\Phase_II\000_CAD\008_Structural\Structure_016-1718\Existing Plans\33906-60X93-SXX-Existing304

HBM ENGINEERING GROUP, LLC

USER NAME = ahmad.issa	DESIGNED -	REVISED -
	CHECKED -	REVISED -
PLOT SCALE = N.T.S	DRAWN -	REVISED -
PLOT DATE = 7/26/2018	CHECKED - MI, MAI	REVISED -

STATE OF ILLINOIS
DEPARTMENT OF TRANSPORTATION

EXISTING RECORD DRAWINGS

F.A.I. RTE.	SECTION	COUNTY	TOTAL SHEETS	SHEET NO.
90/94/290	2014-013R&B-R	COOK	1972	1792
		CONTRACT NO. 60X93		
		ILLINOIS	FED. AID PROJECT	

2:29:26 PM

FOR INFORMATION ONLY

ROUTE NO.	SECTION	COUNTY	TOTAL SHEETS	SHEET NO.
F.A.I. RT. 94	1975-117-R	COOK	290	16
FED. ROAD DIV. NO. 7	ILLINOIS	PROJECT I-IX-94-3( )		

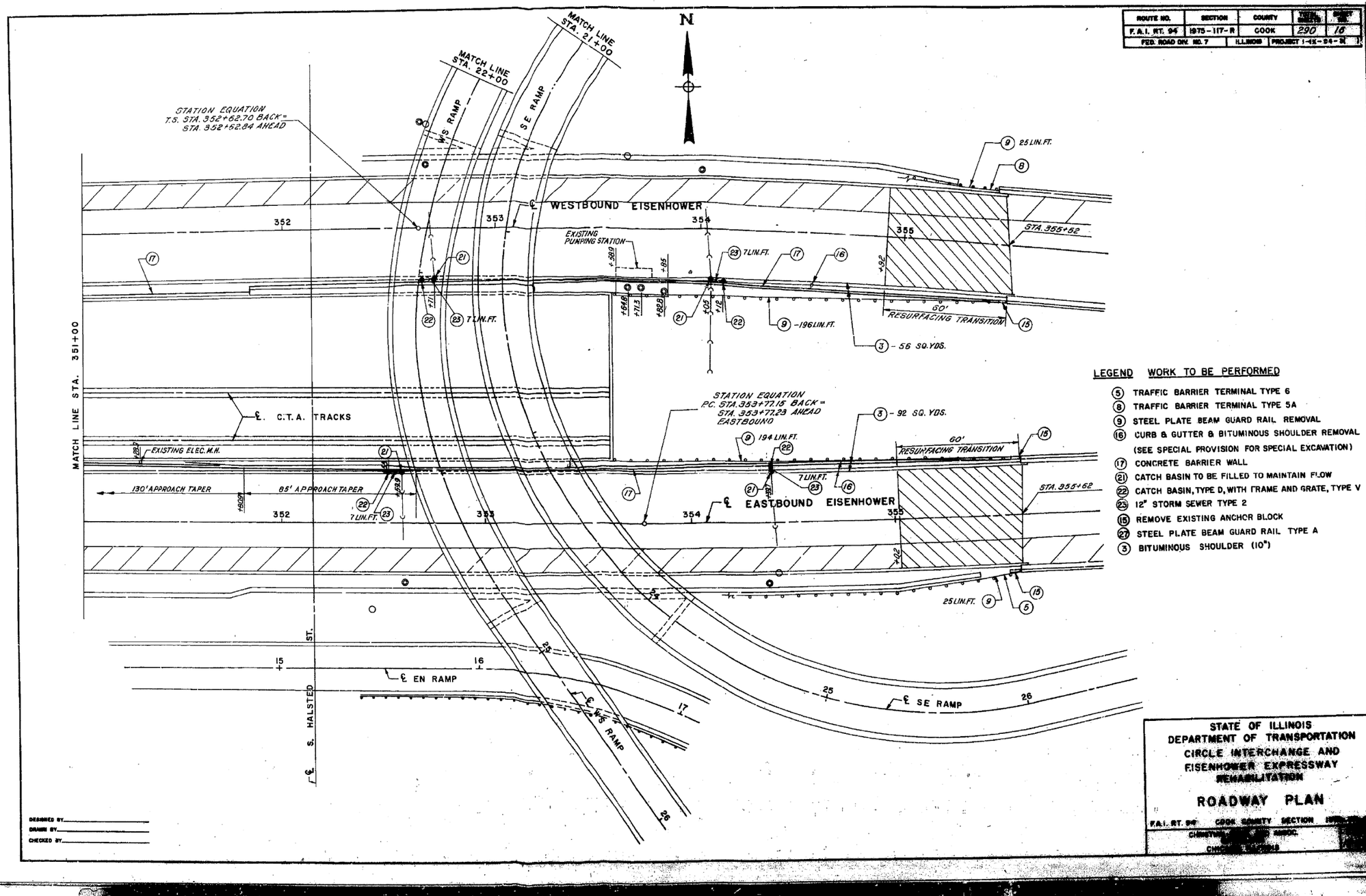

LEGEND WORK TO BE PERFORMED

- (5) TRAFFIC BARRIER TERMINAL TYPE 6
- (8) TRAFFIC BARRIER TERMINAL TYPE 5A
- (9) STEEL PLATE BEAM GUARD RAIL REMOVAL
- (16) CURB & GUTTER & BITUMINOUS SHOULDER REMOVAL (SEE SPECIAL PROVISION FOR SPECIAL EXCAVATION)
- (17) CONCRETE BARRIER WALL
- (21) CATCH BASIN TO BE FILLED TO MAINTAIN FLOW
- (22) CATCH BASIN, TYPE D, WITH FRAME AND GRATE, TYPE V
- (25) 12" STORM SEWER TYPE 2
- (15) REMOVE EXISTING ANCHOR BLOCK
- (27) STEEL PLATE BEAM GUARD RAIL TYPE A
- (3) BITUMINOUS SHOULDER (10")

STATE OF ILLINOIS
DEPARTMENT OF TRANSPORTATION
CIRCLE INTERCHANGE AND
EISENHOWER EXPRESSWAY
REHABILITATION

ROADWAY PLAN

F.A.I. RT. 94 COOK COUNTY SECTION

FILE NAME: pw:\\617479-PWINT.aecomonline.local:AECOM_DS02_NA\Documents\01 Americas\Transportation\60269938 Circle\Phase_II\000_CAD\008_Structural\Structure_016-1718\Existing Plans\33906-60X93-SXX-Existing305

2:29:34 PM

HBM ENGINEERING GROUP, LLC

USER NAME = ahmad.issa	DESIGNED -	REVISED -
	CHECKED -	REVISED -
PLOT SCALE = N.T.S	DRAWN -	REVISED -
PLOT DATE = 7/26/2018	CHECKED - MI. MAI	REVISED -

STATE OF ILLINOIS
DEPARTMENT OF TRANSPORTATION

EXISTING RECORD DRAWINGS

F.A.I. RTE.	SECTION	COUNTY	TOTAL SHEETS	SHEET NO.
90/94/290	2014-013R&B-R	COOK	1972	1793
		CONTRACT NO. 60X93		
		ILLINOIS	FED. AID PROJECT	

FOR INFORMATION ONLY

ROUTE NO.	SECTION	COUNTY	TOTAL SHEETS	SHEET NO.
F.A.I. RT. 94	1975-117-R	COOK	290	17
FED. ROAD DIV. NO. 7		ILLINOIS	PROJECT I-IX-94-3( )	

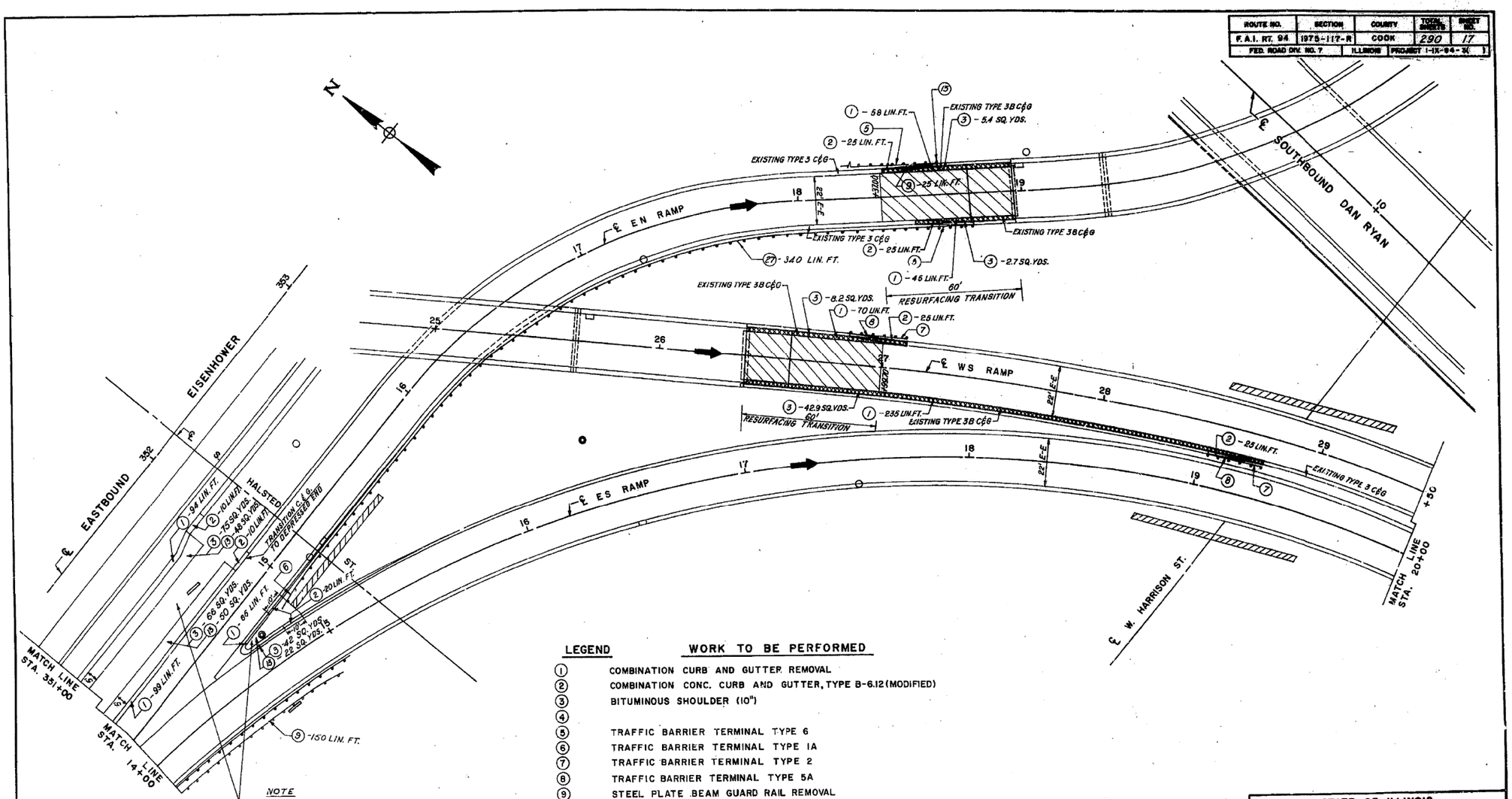

LEGEND — WORK TO BE PERFORMED

(1)	COMBINATION CURB AND GUTTER REMOVAL
(2)	COMBINATION CONC. CURB AND GUTTER, TYPE B-6.12 (MODIFIED)
(3)	BITUMINOUS SHOULDER (10")
(4)	
(5)	TRAFFIC BARRIER TERMINAL TYPE 6
(6)	TRAFFIC BARRIER TERMINAL TYPE 1A
(7)	TRAFFIC BARRIER TERMINAL TYPE 2
(8)	TRAFFIC BARRIER TERMINAL TYPE 5A
(9)	STEEL PLATE BEAM GUARD RAIL REMOVAL
(15)	REMOVE EXISTING ANCHOR BLOCK
(27)	STEEL PLATE BEAM GUARD RAIL TYPE A
(13)	BITUMINOUS SHOULDER REMOVAL (SEE PROVISIONS FOR SPECIAL EXCAVATION)

DESIGNED BY
DRAWN BY
CHECKED BY

STATE OF ILLINOIS
DEPARTMENT OF TRANSPORTATION
CIRCLE INTERCHANGE AND
EISENHOWER EXPRESSWAY
REHABILITATION

ROADWAY PLAN

F.A.I. RT. 94 COOK COUNTY SECTION 1975-117-R

CHRISTIAN-SCHMIDT AND ASSOC.
ENGINEERS
CHICAGO, ILLINOIS

FILE NAME: pw:\\617479-PWINT.aecomonline.local:AECOM_DS02_NA\Documents\01 Americas\Transportation\60269938 Circle\Phase_II\000_CAD\008_Structural\Structure_016-1718\Existing Plans\33906-60X93-SXX-Existing306

2:29:42 PM

HBM ENGINEERING GROUP, LLC

USER NAME = ahmad.issa	DESIGNED -	REVISED -	
	CHECKED -	REVISED -	
PLOT SCALE = N.T.S	DRAWN -	REVISED -	
PLOT DATE = 7/26/2018	CHECKED - MI, MAI	REVISED -	

STATE OF ILLINOIS
DEPARTMENT OF TRANSPORTATION

EXISTING RECORD DRAWINGS

F.A.I. RTE.	SECTION	COUNTY	TOTAL SHEETS	SHEET NO.
90/94/290	2014-013R&B-R	COOK	1972	1794
		CONTRACT NO. 60X93		
		ILLINOIS	FED. AID PROJECT	

FOR INFORMATION ONLY

ROUTE NO.	SECTION	COUNTY	
F.A.I. RT. 94	1975-117-R	COOK	
FED. ROAD DIV. NO. 7	ILLINOIS	PROJECT	

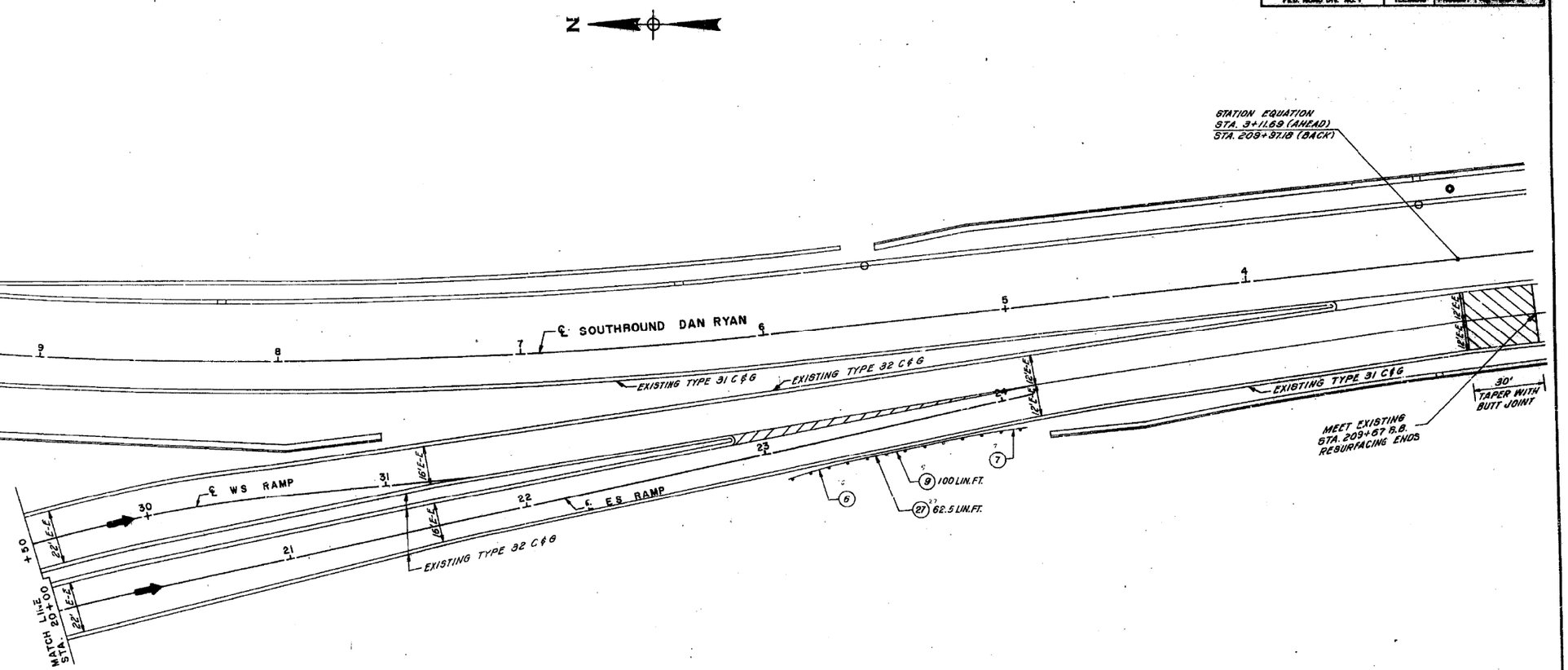

LEGEND	WORK TO BE PERFORMED
6	TRAFFIC BARRIER TERMINAL TYPE 1A
7	TRAFFIC BARRIER TERMINAL TYPE 2
9	STEEL PLATE BEAM GUARD RAIL REMOVAL
27	STEEL PLATE BEAM GUARD RAIL TYPE A

STATE OF ILLINOIS
DEPARTMENT OF TRANSPORTATION
CIRCLE INTERCHANGE AND
EISENHOWER EXPRESSWAY
RECONSTRUCTION

ROADWAY PLAN

F.A.I. RT. 94 COOK COUNTY SECTION

CONTRACT NO. 60X93

DESIGNED BY
CHECKED BY
DRAWN BY

FILE NAME: pw:\\617479-PWINT.aecomonline.local:AECOM_DS02_NA\Documents\01 Americas\Transportation\60269938 Circle\Phase_II\000_CAD\008_Structural\Structure_016-1718\Existing Plans\33906-60X93-SXX-Existing307

2:29:49 PM

HBM ENGINEERING GROUP, LLC	USER NAME = ahmad.issa	DESIGNED -	REVISED -
		CHECKED -	REVISED -
	PLOT SCALE = N.T.S	DRAWN -	REVISED -
	PLOT DATE = 7/26/2018	CHECKED - MI, MAI	REVISED -

STATE OF ILLINOIS
DEPARTMENT OF TRANSPORTATION

EXISTING RECORD DRAWINGS

F.A.I. RTE.	SECTION	COUNTY	TOTAL SHEETS	SHEET NO.
90/94/290	2014-013R&B-R	COOK	1972	1795
		CONTRACT NO. 60X93		
		ILLINOIS	FED. AID PROJECT	

FOR INFORMATION ONLY

ROUTE NO.	SECTION	COUNTY	TOTAL SHEETS	SHEET NO.
F.A.I. RT. 94	1975-117-R	COOK	290	19
FED. ROAD DIV. NO. 7		ILLINOIS	PROJECT I-IX-94-3(	

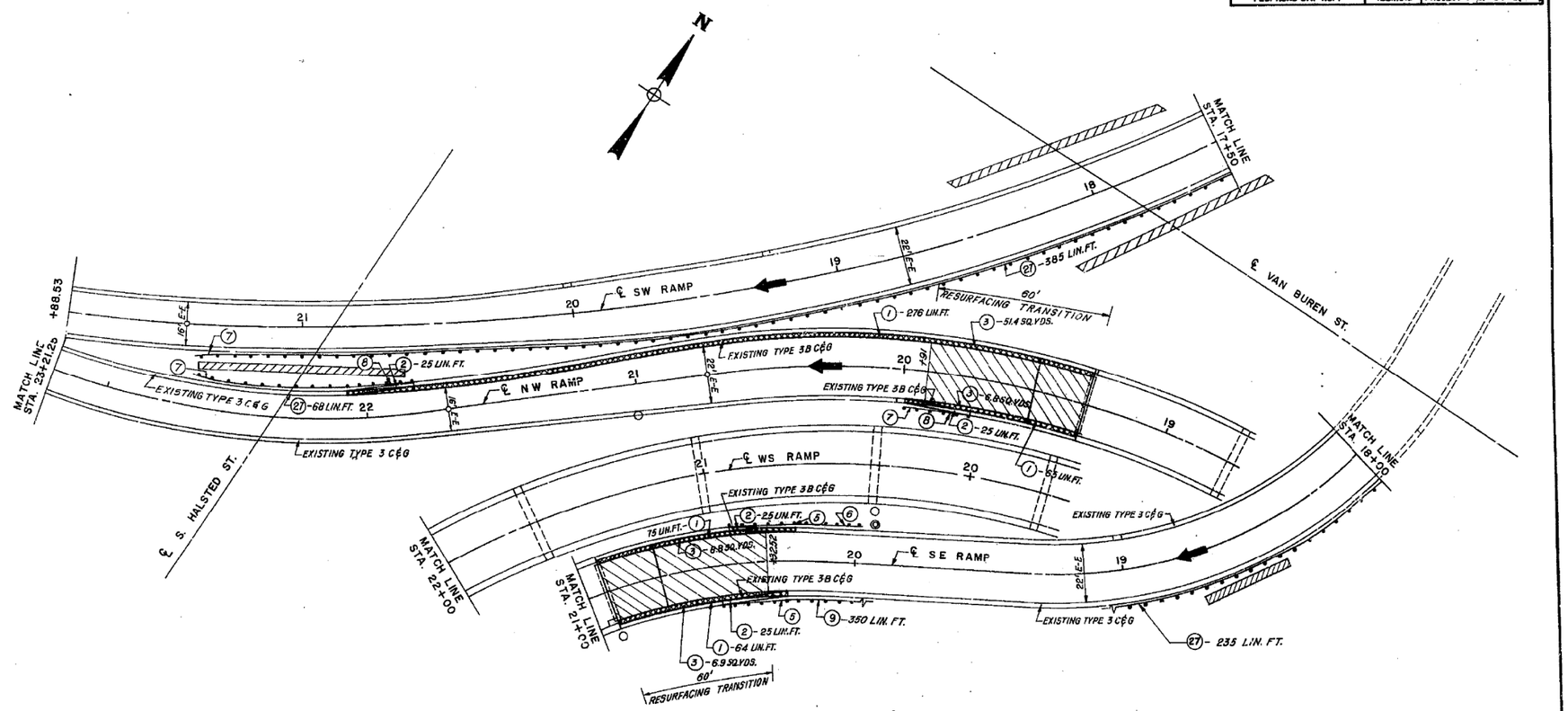

LEGEND	WORK TO BE PERFORMED
(1)	COMBINATION CURB AND GUTTER REMOVAL
(2)	COMBINATION CONC. CURB AND GUTTER, TYPE B-6.12 (MODIFIED)
(3)	BITUMINOUS SHOULDER (10")
(4)	
(5)	TRAFFIC BARRIER TERMINAL TYPE 6
(6)	TRAFFIC BARRIER TERMINAL TYPE 1A
(7)	TRAFFIC BARRIER TERMINAL TYPE 2
(8)	TRAFFIC BARRIER TERMINAL TYPE 5A
(9)	STEEL PLATE BEAM GUARD RAIL REMOVAL
(10)	STEEL PLATE BEAM GUARD RAIL TYPE B
(11)	STEEL PLATE BEAM GUARD RAIL TYPE C
(27)	STEEL PLATE BEAM GUARD RAIL TYPE A

DESIGNED BY
DRAWN BY
CHECKED BY

STATE OF ILLINOIS
DEPARTMENT OF TRANSPORTATION
CIRCLE INTERCHANGE AND
EISENHOWER EXPRESSWAY
REHABILITATION

ROADWAY PLAN

F.A.I. RT. 94 COOK COUNTY SECTION 1975-117-R

CHRISTIAN-ROSE AND ASSOC. ENGINEERS
CHICAGO, ILLINOIS

SHEET 19 of 29

FILE NAME: pw:\\617479-PWINT.aecomonline.local:AECOM_DS02_NA\Documents\01 Americas\Transportation\60269938 Circle\Phase_II\000_CAD\008_Structural\Structure_016-1718\Existing Plans\33906-60X93-SXX-Existing308

HBM ENGINEERING GROUP, LLC

USER NAME = ahmad.issa	DESIGNED -	REVISED -
	CHECKED -	REVISED -
PLOT SCALE = N.T.S	DRAWN -	REVISED -
PLOT DATE = 7/26/2018	CHECKED - MI, MAI	REVISED -

STATE OF ILLINOIS
DEPARTMENT OF TRANSPORTATION

EXISTING RECORD DRAWINGS

F.A.I. RTE.	SECTION	COUNTY	TOTAL SHEETS	SHEET NO.
90/94/290	2014-013R&B-R	COOK	1972	1796
		CONTRACT NO. 60X93		
		ILLINOIS	FED. AID PROJECT	

2:29:58 PM

FOR INFORMATION ONLY

ROUTE NO.	SECTION	COUNTY	TOTAL SHEETS	SHEET NO.
F.A.I. RT. 94	1975-117-R	COOK	290	20
FED. ROAD DIV. NO. 7		ILLINOIS	PROJECT I-IX-94-3( )	

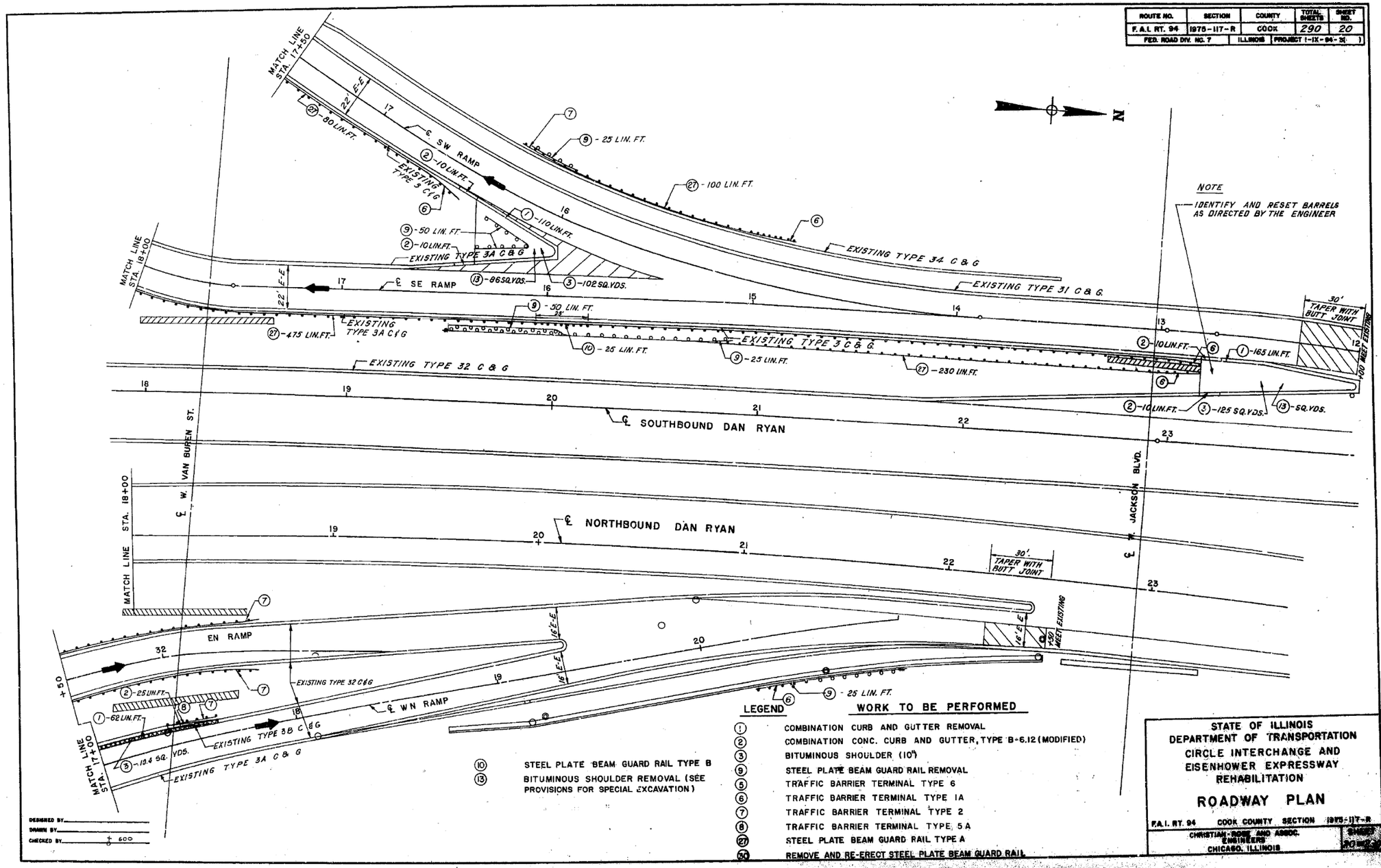

LEGEND

	WORK TO BE PERFORMED
1	COMBINATION CURB AND GUTTER REMOVAL
2	COMBINATION CONC. CURB AND GUTTER, TYPE B-6.12 (MODIFIED)
3	BITUMINOUS SHOULDER (10")
9	STEEL PLATE BEAM GUARD RAIL REMOVAL
5	TRAFFIC BARRIER TERMINAL TYPE 6
6	TRAFFIC BARRIER TERMINAL TYPE 1A
7	TRAFFIC BARRIER TERMINAL TYPE 2
8	TRAFFIC BARRIER TERMINAL TYPE 5A
27	STEEL PLATE BEAM GUARD RAIL TYPE A
50	REMOVE AND RE-ERECT STEEL PLATE BEAM GUARD RAIL
10	STEEL PLATE BEAM GUARD RAIL TYPE B
13	BITUMINOUS SHOULDER REMOVAL (SEE PROVISIONS FOR SPECIAL EXCAVATION)

STATE OF ILLINOIS
DEPARTMENT OF TRANSPORTATION
CIRCLE INTERCHANGE AND
EISENHOWER EXPRESSWAY
REHABILITATION

ROADWAY PLAN

F.A.I. RT. 94 COOK COUNTY SECTION 1975-117-R

CHRISTIANI-BOSE AND ASSOC. ENGINEERS
CHICAGO, ILLINOIS

SHEET 20 OF 290

FILE NAME: pw:\\61479-PWINT.aecomonline.local:AECOM_DS02_NA\Documents\01 Americas\Transportation\60269938 Circle\Phase_II\000_CAD\008_Structural\Structure_016-1718\Existing Plans\33906-60X93-SXX-Existing309

2:30:06 PM

HBM ENGINEERING GROUP, LLC

USER NAME = ahmad.issa	DESIGNED -	REVISED -	
	CHECKED -	REVISED -	
PLOT SCALE = N.T.S	DRAWN -	REVISED -	
PLOT DATE = 7/26/2018	CHECKED - MI, MAI	REVISED -	

STATE OF ILLINOIS
DEPARTMENT OF TRANSPORTATION

EXISTING RECORD DRAWINGS

F.A.I. RTE.	SECTION	COUNTY	TOTAL SHEETS	SHEET NO.
90/94/290	2014-013R&B-R	COOK	1972	1797
		CONTRACT NO. 60X93		
		ILLINOIS	FED. AID PROJECT	

FOR INFORMATION ONLY

ROUTE NO.	SECTION	COUNTY	TOTAL SHEETS	SHEET NO.
F.A.I. RT. 94	1975-117-R	COOK	290	21
FED. ROAD DIV. NO. 7		ILLINOIS	PROJECT I-IX-94-3( )	

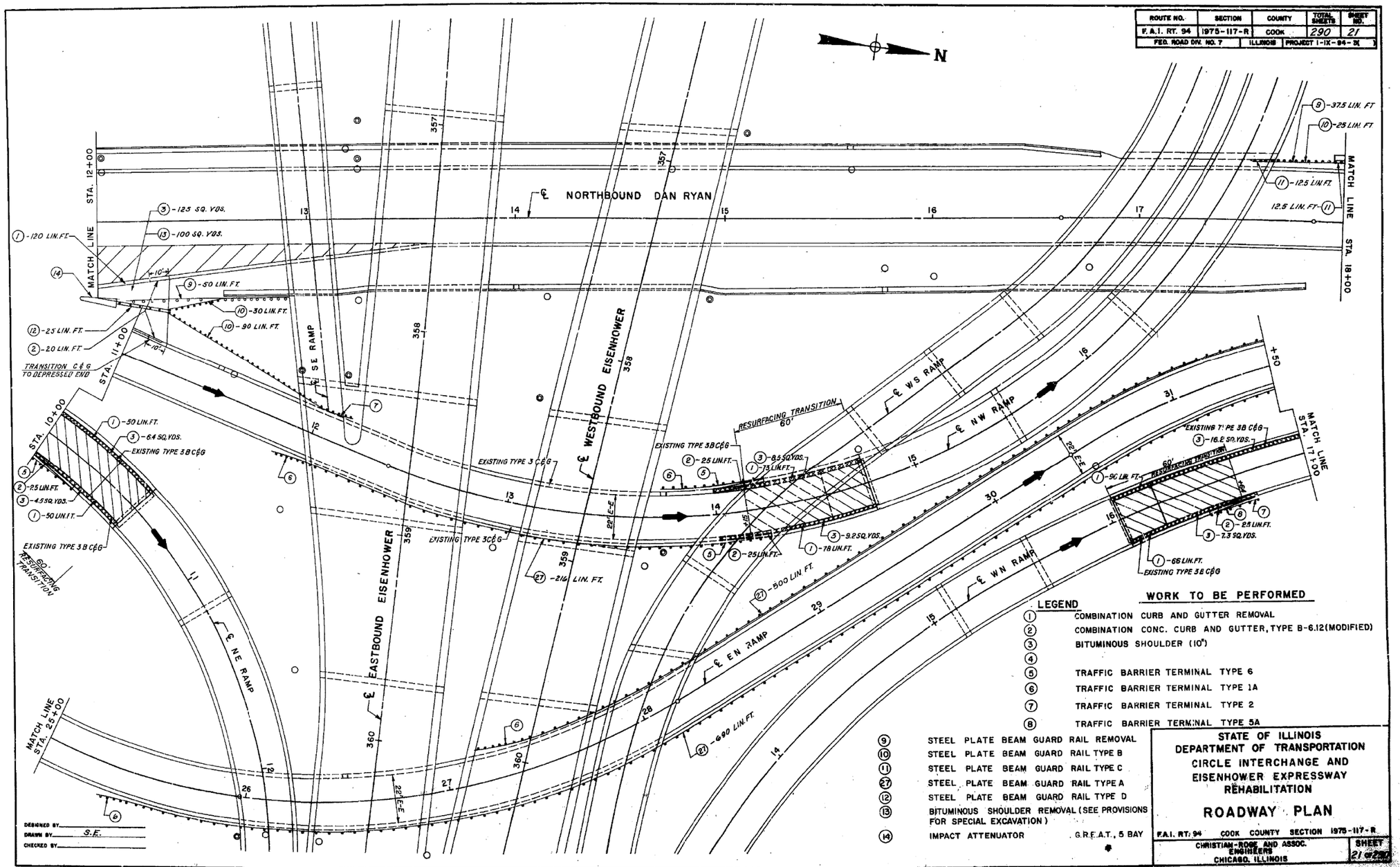

LEGEND — WORK TO BE PERFORMED

1	COMBINATION CURB AND GUTTER REMOVAL
2	COMBINATION CONC. CURB AND GUTTER, TYPE B-6.12(MODIFIED)
3	BITUMINOUS SHOULDER (10")
4	
5	TRAFFIC BARRIER TERMINAL TYPE 6
6	TRAFFIC BARRIER TERMINAL TYPE 1A
7	TRAFFIC BARRIER TERMINAL TYPE 2
8	TRAFFIC BARRIER TERMINAL TYPE 5A
9	STEEL PLATE BEAM GUARD RAIL REMOVAL
10	STEEL PLATE BEAM GUARD RAIL TYPE B
11	STEEL PLATE BEAM GUARD RAIL TYPE C
27	STEEL PLATE BEAM GUARD RAIL TYPE A
12	STEEL PLATE BEAM GUARD RAIL TYPE D
13	BITUMINOUS SHOULDER REMOVAL (SEE PROVISIONS FOR SPECIAL EXCAVATION)
14	IMPACT ATTENUATOR G.R.E.A.T., 5 BAY

STATE OF ILLINOIS
DEPARTMENT OF TRANSPORTATION
CIRCLE INTERCHANGE AND
EISENHOWER EXPRESSWAY
REHABILITATION

ROADWAY PLAN

F.A.I. RT. 94 COOK COUNTY SECTION 1975-117-R

CHRISTIAN-ROSE AND ASSOC. ENGINEERS
CHICAGO, ILLINOIS

SHEET 21 OF 290

FILE NAME: pw:\\617479-PWINT.aecomonline.local:AECOM_DS02_NA\Documents\01 Americas\Transportation\60269938 Circle\Phase_II\000_CAD\008_Structural\Structural\Structure_016-1718\Existing Plans\33906-60X93-SXX-Existing310

HBM ENGINEERING GROUP, LLC

USER NAME = ahmad.issa	DESIGNED -	REVISED -
	CHECKED -	REVISED -
PLOT SCALE = N.T.S	DRAWN -	REVISED -
PLOT DATE = 7/26/2018	CHECKED - MI, MAI	REVISED -

STATE OF ILLINOIS
DEPARTMENT OF TRANSPORTATION

EXISTING RECORD DRAWINGS

F.A.I. RTE.	SECTION	COUNTY	TOTAL SHEETS	SHEET NO.
90/94/290	2014-013R&B-R	COOK	1972	1798
		CONTRACT NO. 60X93		
		ILLINOIS	FED. AID PROJECT	

2:30:15 PM

FOR INFORMATION ONLY

ROUTE NO.	SECTION	COUNTY	TOTAL SHEETS	SHEET NO.
F.A.I. RT. 94	1978-117-R	COOK	290	22
FED. ROAD DIV. NO. 7	ILLINOIS	PROJECT I-IX-94-3( )		

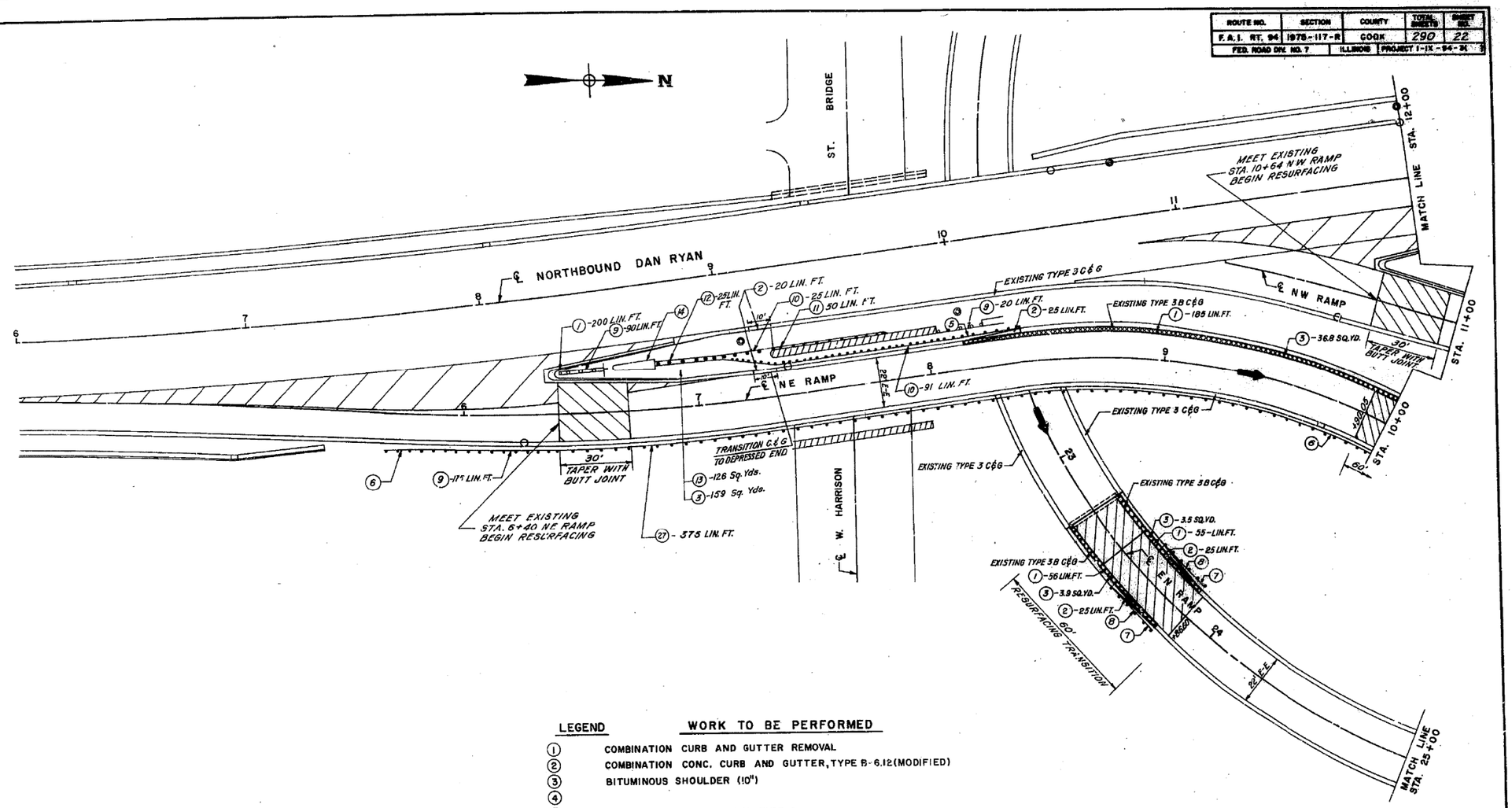

LEGEND — WORK TO BE PERFORMED

1. COMBINATION CURB AND GUTTER REMOVAL
2. COMBINATION CONC. CURB AND GUTTER, TYPE B-6.12 (MODIFIED)
3. BITUMINOUS SHOULDER (10")
4.
5. TRAFFIC BARRIER TERMINAL TYPE 6
6. TRAFFIC BARRIER TERMINAL TYPE 1A
7. TRAFFIC BARRIER TERMINAL TYPE 2
8. TRAFFIC BARRIER TERMINAL TYPE 5A
9. STEEL PLATE BEAM GUARD RAIL REMOVAL
10. STEEL PLATE BEAM GUARD RAIL TYPE B
11. STEEL PLATE BEAM GUARD RAIL TYPE C
12. STEEL PLATE BEAM GUARD RAIL TYPE D
13. BITUMINOUS SHOULDER REMOVAL (SEE PROVISIONS FOR SPECIAL EXCAVATION)
14. IMPACT ATTENUATOR G.R.E.A.T., 5 BAY
27. STEEL PLATE BEAM GUARD RAIL TYPE A

DESIGNED BY
DRAWN BY
CHECKED BY

STATE OF ILLINOIS
DEPARTMENT OF TRANSPORTATION
CIRCLE INTERCHANGE AND
EISENHOWER EXPRESSWAY
REHABILITATION

ROADWAY PLAN

F.A.I. RT. 94 COOK COUNTY SECTION 1978-117-R

CHRISTY WEBBER AND ASSOC.
CHICAGO, ILLINOIS

Div. 3/8-85

FILE NAME: pw:\\617479-PWINT.aecomonline.local:AECOM_DS02_NA\Documents\01 Americas\Transportation\60269938 Circle\Phase_II\000_CAD\008_Structural\Structure_016-1718\Existing Plans\33906-60X93-SXX-Existing311

HBM ENGINEERING GROUP, LLC	USER NAME = ahmad.issa	DESIGNED -	REVISED -	STATE OF ILLINOIS DEPARTMENT OF TRANSPORTATION	EXISTING RECORD DRAWINGS
		CHECKED -	REVISED -		
	PLOT SCALE = N.T.S	DRAWN -	REVISED -		
	PLOT DATE = 7/26/2018	CHECKED - MI, MAI	REVISED -		

F.A.I. RTE.	SECTION	COUNTY	TOTAL SHEETS	SHEET NO.
90/94/290	2014-013R&B-R	COOK	1972	1799
		CONTRACT NO. 60X93		
		ILLINOIS	FED. AID PROJECT	

2:30:23 PM

FOR INFORMATION ONLY

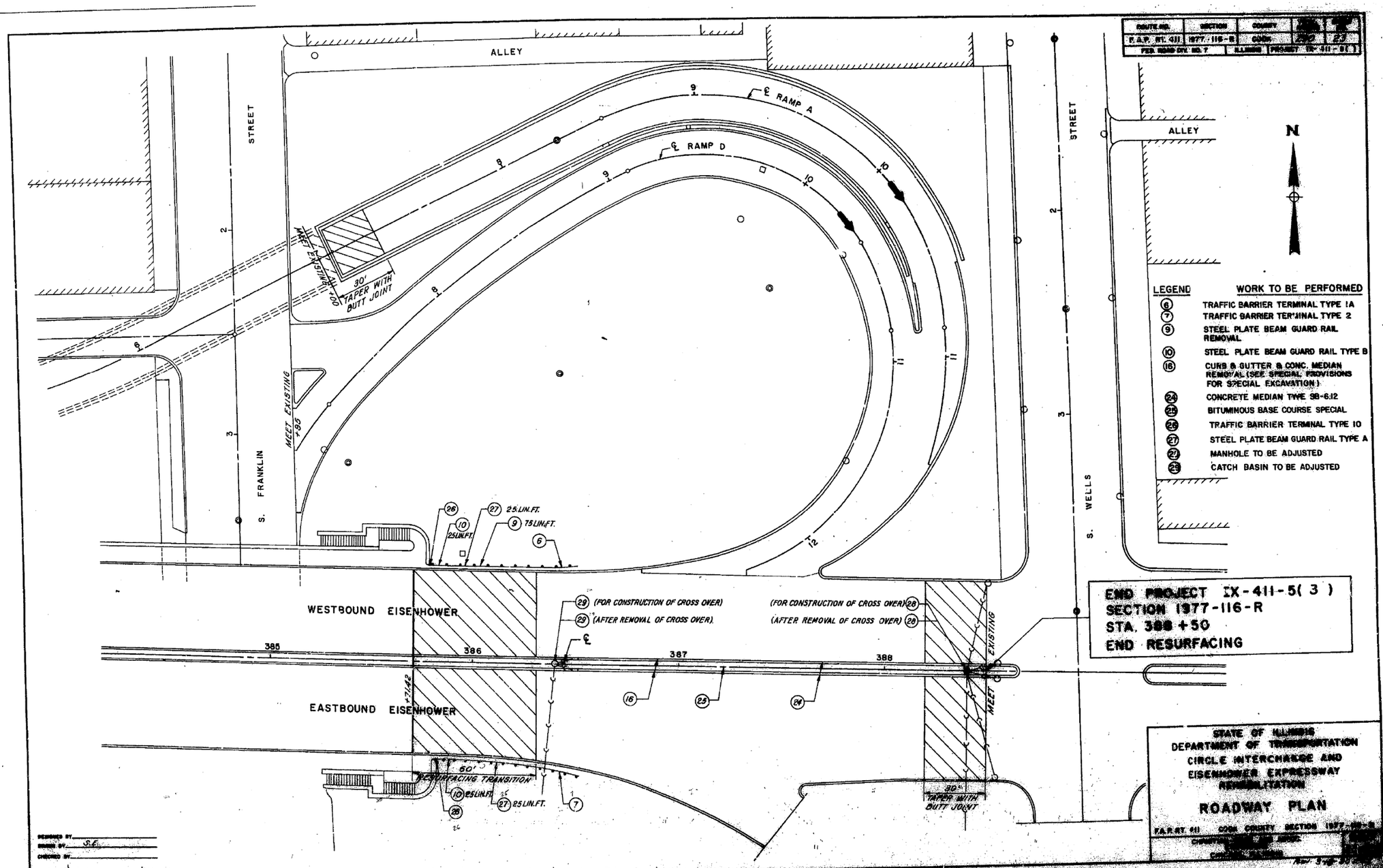

HBM ENGINEERING GROUP, LLC	USER NAME = ahmad.issa	DESIGNED -	REVISED -	STATE OF ILLINOIS DEPARTMENT OF TRANSPORTATION	EXISTING RECORD DRAWINGS	F.A.I. RTE.	SECTION	COUNTY	TOTAL SHEETS	SHEET NO.
		CHECKED -	REVISED -			90/94/290	2014-013R&B-R	COOK	1972	1800
	PLOT SCALE = N.T.S	DRAWN -	REVISED -					CONTRACT NO. 60X93		
	PLOT DATE = 7/26/2018	CHECKED - MI, MAI	REVISED -				ILLINOIS	FED. AID PROJECT		

FILE NAME: pw:\\617479-PWINT.aecomonline.local:AECOM_DS02_NA\Documents\01 Americas\Transportation\60269938 Circle\Phase_II\000_CAD\008_Structural\Structure_016-1718\Existing Plans\33906-60X93-SXX-Existing312

2:30:30 PM