NOTE:
THE TRAFFIC SIGNAL CONTROLLER EQUIPMENT FOR THIS PROJECT SHALL BE "EAGLE" TO MATCH THE EXISTING ADJACENT SYSTEM.

RESTORATION OF WORK AREA. RESTORATION OF THE TRAFFIC SIGNAL WORK AREA SHALL BE INCIDENTAL TO THE RELATED PAY ITEM SUCH AS FOUNDATION, CONDUIT, HANDHOLE, TRENCH AND BACKFILL, ETC., AND NO EXTRA COMPENSATION SHALL BE ALLOWED. ALL ROADWAY SURFACES SUCH AS SHOULDERS, MEDIANS, SIDEWALKS, PAVEMENT, ETC. SHALL BE REPLACED IN KIND. ALL DAMAGE TO MOWED LAWNS SHALL BE REPLACED WITH AN APPROVED SOD, AND ALL DAMAGE TO UNMOWED FIELDS SHALL BE SEEDED IN ACCORDANCE WITH STANDARD SPECIFICATIONS 252 AND 250 RESPECTIVELY.

CONSTRUCTION NOTES:

(1) TEMPORARY RADIO INTERCONNECT SHALL NOT BE REMOVED UNTIL FIBER INTERCONNECT TO IL. ROUTE 62 (ALGONQUIN RD.) IS INSTALLED AND OPERATIONAL.

(2) NB AND SB LEFT TURN ARROWS SHALL BE UNBAGGED, CONNECTED, AND OPERATIONAL IN STAGE III.

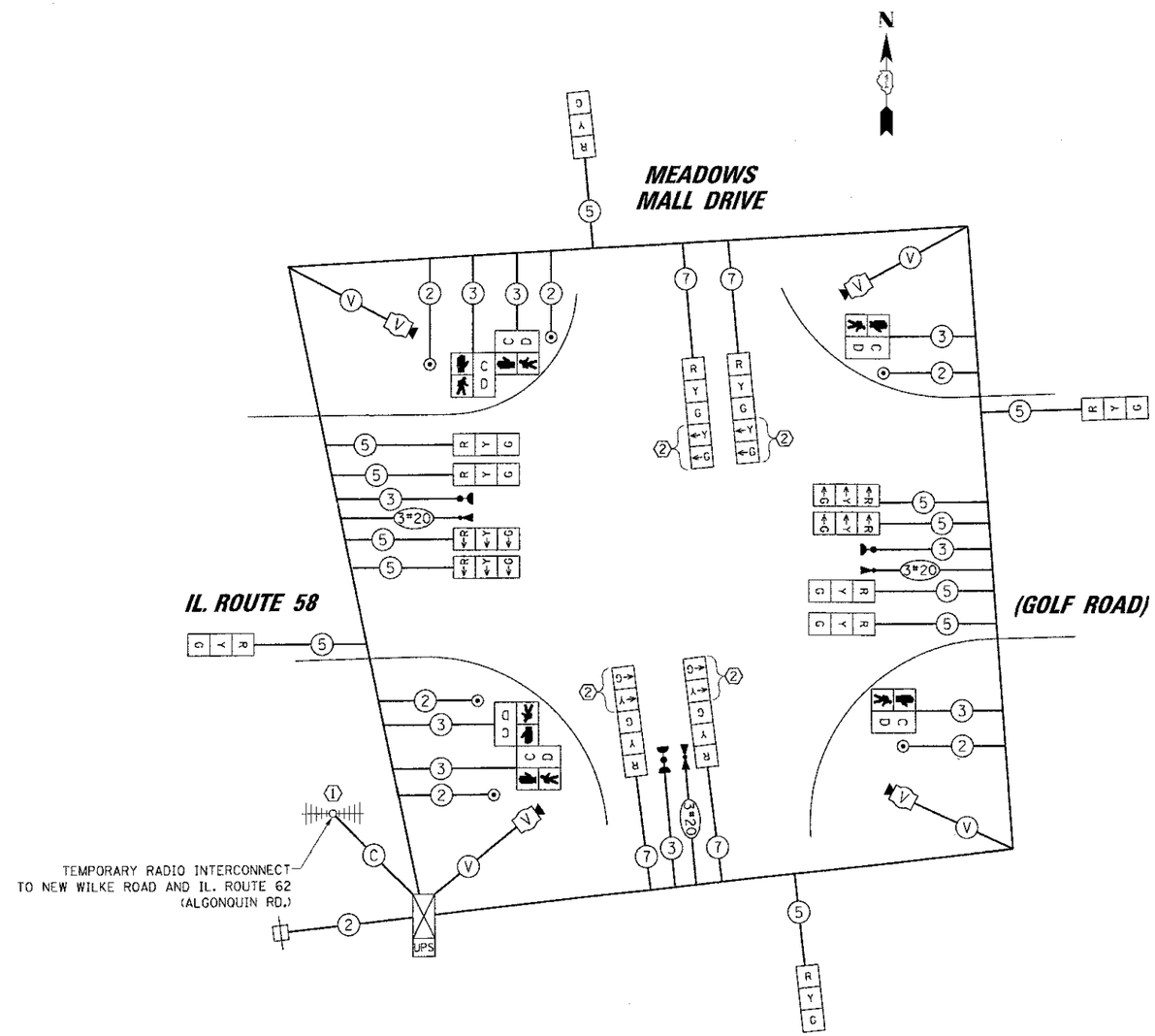

TEMPORARY CABLE PLAN
STAGE 3 / INTERIM

TEMPORARY CONTROLLER SEQUENCE

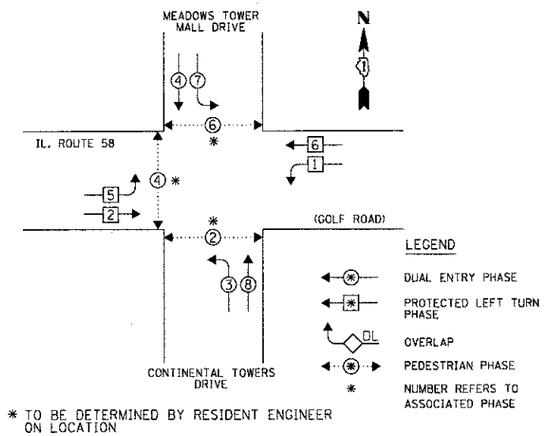

* TO BE DETERMINED BY RESIDENT ENGINEER ON LOCATION

TEMPORARY PHASE DESIGNATION DIAGRAM
STAGE 3 / INTERIM

TEMPORARY EMERGENCY VEHICLE PREEMPTION SEQUENCE
STAGE 3 / INTERIM

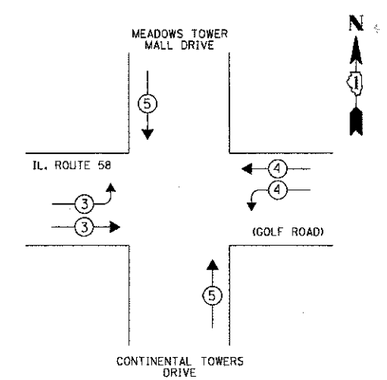

TEMPORARY EMERGENCY VEHICLE PREEMPTORS			
EMERGENCY VEHICLE PREEMPTOR	3	4	5
MOVEMENT			

I.D.O.T. TRAFFIC SIGNAL INSTALLATION ELECTRICAL SERVICE REQUIREMENTS					TOTAL WATTAGE
TYPE	NO. OF LAMPS	WATTAGE X INCAND.	WATTAGE LED	X % OPERATION	
SIGNAL (RED)	16		17	0.50	136.0
(YELLOW)	16		25	0.25	100.0
(GREEN)	16		15	0.25	60.0
ARROW	8		12	0.10	9.6
PED. SIGNAL	6		25	1.00	150.0
CONTROLLER	1		100	1.00	100.0
ILLUM. SIGN	-		25	0.05	-
VIDEO SYSTEM	1		150	1.00	150.00
BATTERY BACKUP SYSTEM	1		25	1.00	25.0
FLASHER				0.50	
ENERGY COSTS TO:				TOTAL =	730.6

ILLINOIS DEPARTMENT OF TRANSPORTATION
DIVISION OF HIGHWAY/DISTRICT 1
201 WEST CENTER COURT/SCHAUMBURG, ILLINOIS 60196-1096

ENERGY SUPPLY: CONTACT: DEAN MARTINEZ
PHONE: (630) 691-4869
COMPANY: COMED

STAGE 3 / INTERIM

FILE NAME =	USER NAME = FBARISO	DESIGNED - ABR	REVISED -
		DRAWN - FPB	REVISED -
	PLOT SCALE = 20'	CHECKED - GMZ	REVISED -
	PLOT DATE = 8/30/2012	DATE - 8/06/12	REVISED -

STATE OF ILLINOIS
DEPARTMENT OF TRANSPORTATION

TEMPORARY CABLE PLAN, TEMPORARY PHASE DESIGNATION DIAGRAM AND TEMPORARY EMERGENCY VEHICLE PREEMPTION SEQUENCE
IL RTE 58 (GOLF RD.) AT CONTINENTAL TOWER DR./MEADOWS MALL DR.

SCALE: N.T.S. | SHEET NO. OF SHEETS | STA. TO STA.

F.A.P RTE.	SECTION	COUNTY	TOTAL SHEETS	SHEET NO.
0559	00-00078-00-CH	COOK	116	73
		CONTRACT NO. 83735		

FED. ROAD DIST. NO. | ILLINOIS | FED. AID PROJECT