When "A" is 3'-6" or less, the temporary concrete barrier shall be anchored to the new slab according to Detail I or Detail II. No anchorage is required when "A" is greater than 3'-6".

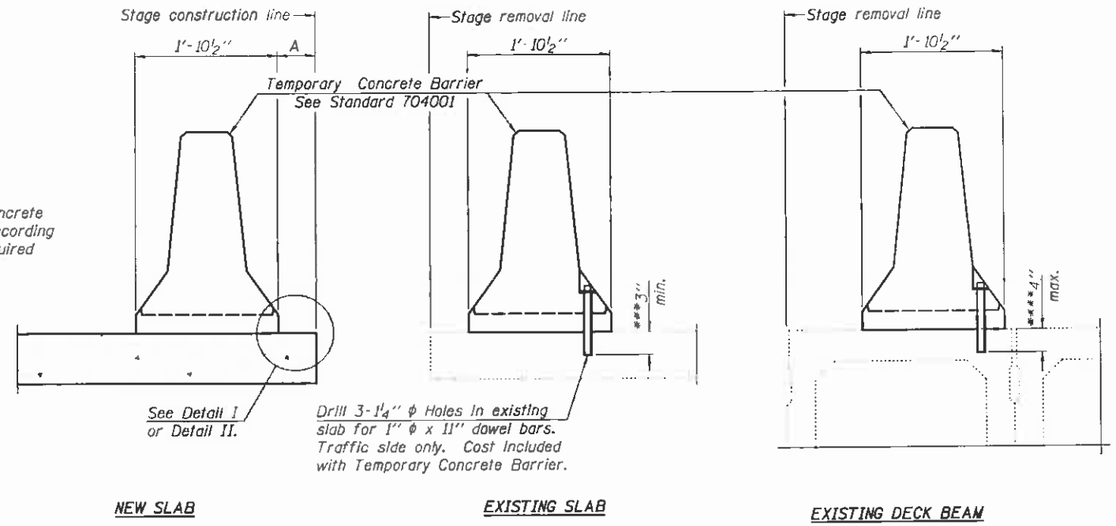

NEW SLAB

EXISTING SLAB

EXISTING DECK BEAM

SECTIONS THRU SLAB OR DECK BEAM

NOTES

Detail I - With Bar Splicer or Couplers:
Connect one (1) 1" x 7" x "W" steel ℙ to the top layer of couplers with 2-⅝" ϕ bolts screwed to coupler at approximate ℄ of each barrier panel.

Detail II - With Extended Reinforcement Bars:
Connect one (1) 1" x 7" x "W" steel ℙ to the concrete slab or concrete wearing surface with 2-⅝" ϕ Expansion Anchors or cast in place inserts spaced between the top layer of reinforcement at approximate ℄ of each barrier panel.

Cost of anchorage is included with Temporary Concrete Barrier.

The 1" x 7" x "W" plate shall not be removed until stage II construction forms and all reinforcement bars are in place and the concrete is ready to be placed.

*** Dimension shown is minimum required embedment into concrete. If hot-mix asphalt wearing surface is present, minimum embedment shall be in addition to wearing surface depth.

**** If existing deck beam is to remain in place after stage construction, embedment shall only be into wearing surface and not into existing deck beam concrete.

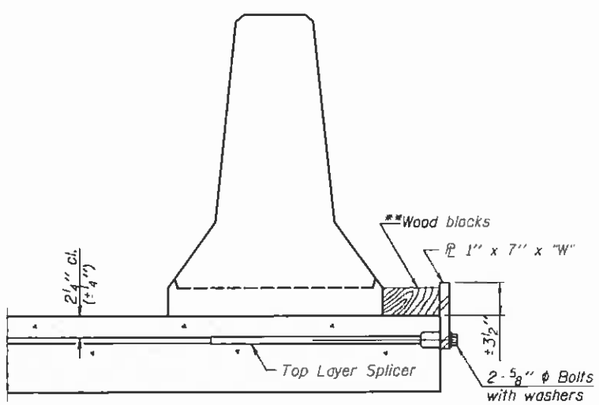

DETAIL I

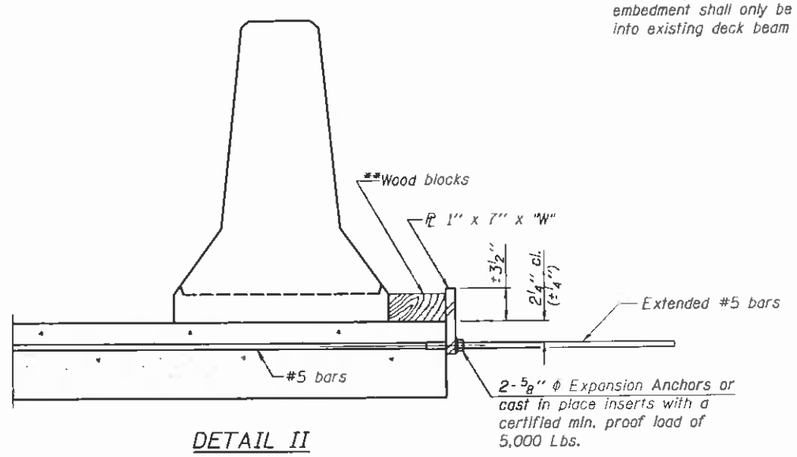

DETAIL II

** Wood blocks may be omitted when required to provide minimum stage traffic lane width. When the wood blocks are omitted, the concrete barrier shall be in direct contact with the steel retainer plate.

"W" = Top bars spacing + 4"

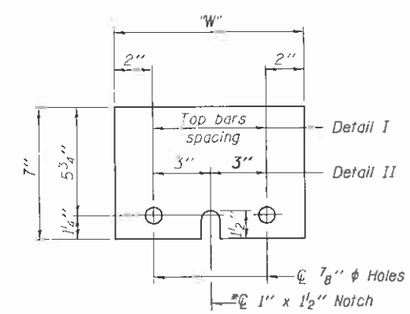

STEEL RETAINER ℙ 1" x 7" x "W"

* Required only with Detail II

R-27 7-1-10

FILE NAME = 0264H73-sht-pinningdetail.dgn PLOT DATE = 5/30/2012 PLOT SCALE = 50.0000 ' / IN.	CHRISTIAN-BOGE & ASSOCIATES, INC. ENGINEERS-PLANNERS-SURVEYORS 211 WEST WACKER DRIVE CHICAGO, ILLINOIS 60606 PHONE: (312)372-2023 FAX: (312)372-5274	DESIGNED -	REVISED -	STATE OF ILLINOIS DEPARTMENT OF TRANSPORTATION	TEMPORARY CONCRETE BARRIER FOR STAGE CONSTRUCTION S.N. 071-0062 (NB) & S.N. 071-0062 (SB)	F.A.I. RTE.	SECTION	COUNTY	TOTAL SHEETS	SHEET NO.
		DRAWN -	REVISED -			39	D2 DECK REPAIR 2013-1	OGLE	32	27
		CHECKED -	REVISED -					CONTRACT NO. 64H73		
		DATE - FEBRUARY 2012	REVISED -		SCALE: SHEET NO. OF SHEETS STA. TO STA.	FED. ROAD DIST. NO. 1	ILLINOIS	FED. AID PROJECT		