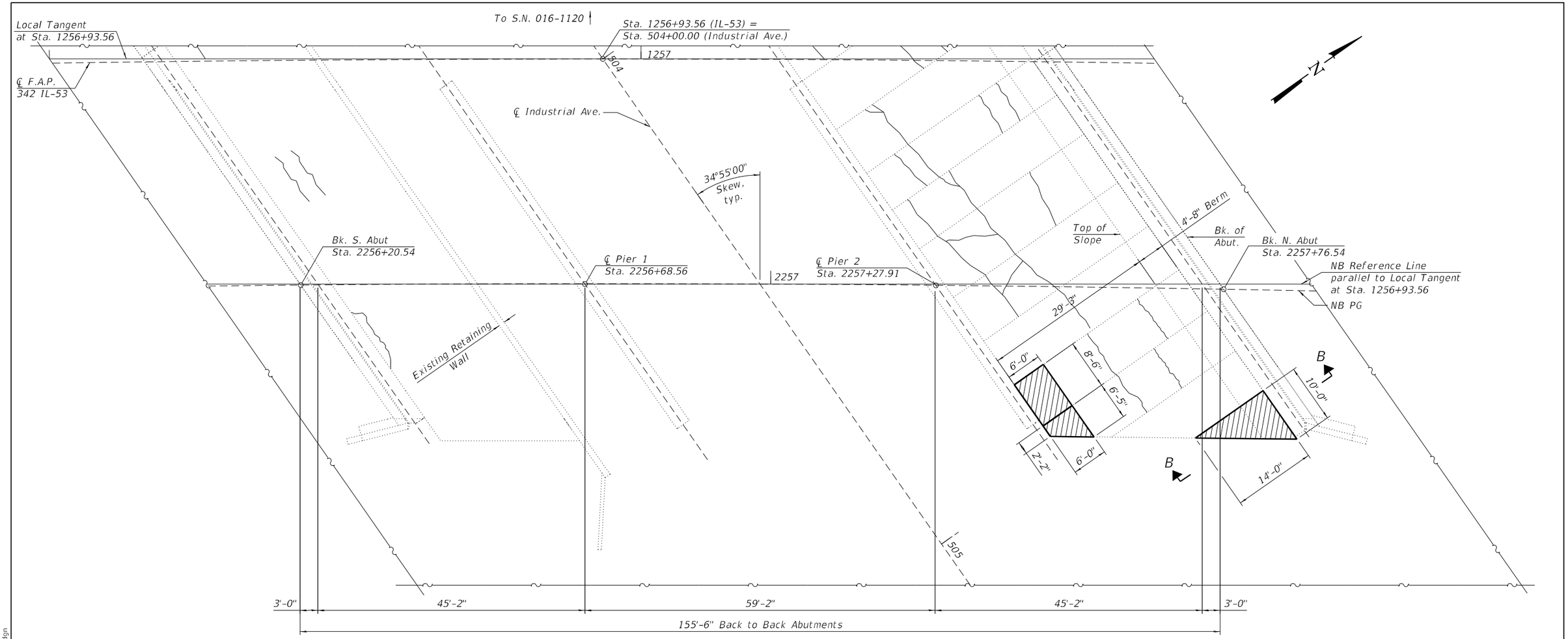

SLOPE WALL REPAIR PLAN

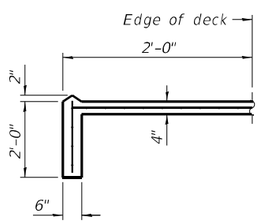

SECTION A-A

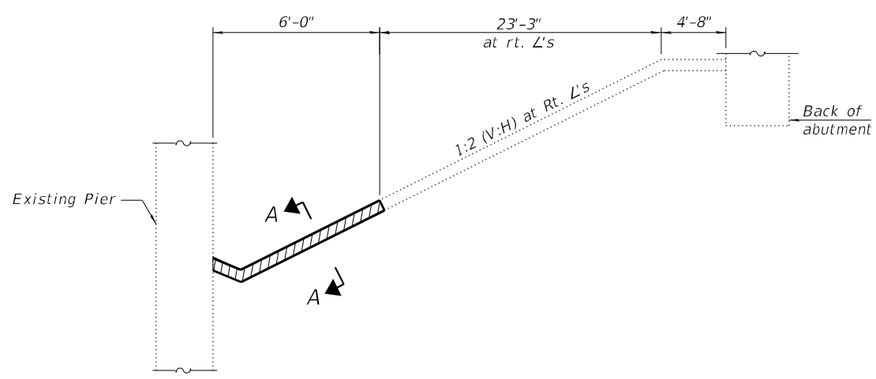

SECTION THRU CONCRETE SLOPEWALL 4"

(North Slope Wall)

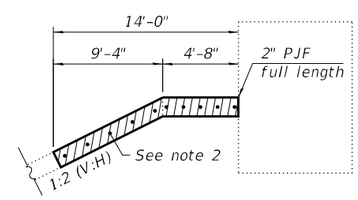

SECTION B-B

(North Slope Wall)

LEGEND

Slope Wall Repair

Slope Wall Crack Sealing

TOTAL BILL OF MATERIALS

Item	Unit	Total
Slope Wall Repair	SQ YD	17.0
Slope Wall Crack Sealing	FOOT	214

Notes:

1. Slope wall shall be reinforced with welded wire fabric, 6in. x 6in. - W4.0 x W4.0, weighing 58lbs. per 100 sq. ft.
2. Existing welded wire fabric shall extend 6" into the proposed Slope Wall Repair. The exposed 6" of welded wire fabric on either side shall be lapped with the proposed slope wall reinforcement.
3. Cost of welded wire fabric shall be included in Slope Wall Repair.

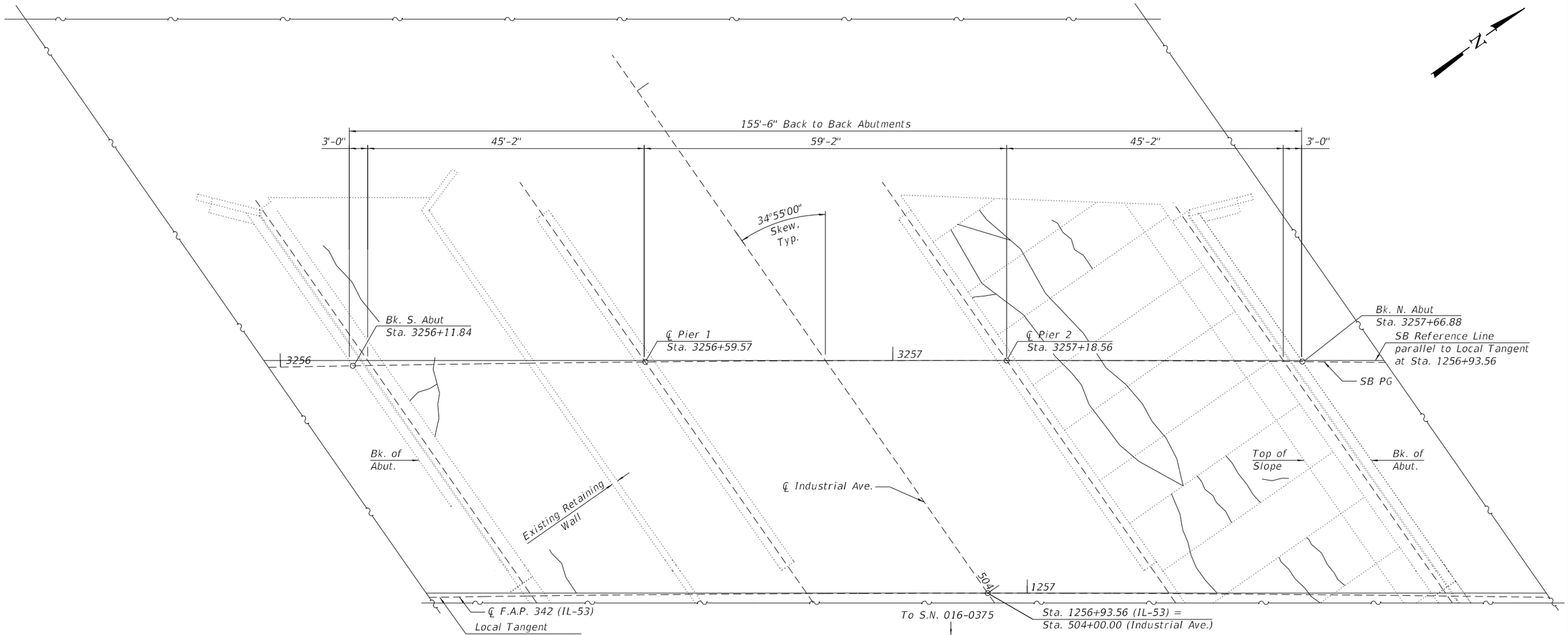

SLOPE WALL REPAIR PLAN

TOTAL BILL OF MATERIALS

Item	Unit	Total
Slope Wall Crack Sealing	FOOT	228

Notes:

1. Slope wall shall be reinforced with welded wire fabric, 6in. x 6in. - W4.0 x W4.0, weighing 58lbs. per 100 sq. ft.
2. Existing welded wire fabric shall extend 6" into the proposed Slope Wall Repair. The exposed 6" of welded wire fabric on either side shall be lapped with the proposed slope wall reinforcement.
3. Cost of welded wire fabric shall be included in Slope Wall Repair.

LEGEND

Slope Wall Crack Sealing

MODEL: Default
FILE NAME: S:\OL\6300-6399\6346\113\Drawings\CAD\Micros-SS4\CAD_Sheets\0160375112O-62W38-044-SSWR.dgn

STRAND ASSOCIATES
1170 SOUTH HOUBOLT ROAD
JOLIET, ILLINOIS 60431
(815) 744-4200
IDFPR NO. 184-001273

USER NAME = codyh	DESIGNED - BRL	REVISED -	
	CHECKED - KRB	REVISED -	
PLOT SCALE = 0:2.0000 ':" / in.	DRAWN - CJH	REVISED -	
PLOT DATE = 9/20/2024	CHECKED - BRL	REVISED -	

STATE OF ILLINOIS
DEPARTMENT OF TRANSPORTATION

SLOPE WALL REPAIR
STRUCTURE NO. 016-1120 (SB)

SHEET 44 OF 48 SHEETS

F.A. RTE.	SECTION	COUNTY	TOTAL SHEETS	SHEET NO.
342	(531) BR 23	COOK	1211	802

CONTRACT NO. 62W38

ILLINOIS | FED. AID PROJECT

9/20/2024 2:14:58 PM

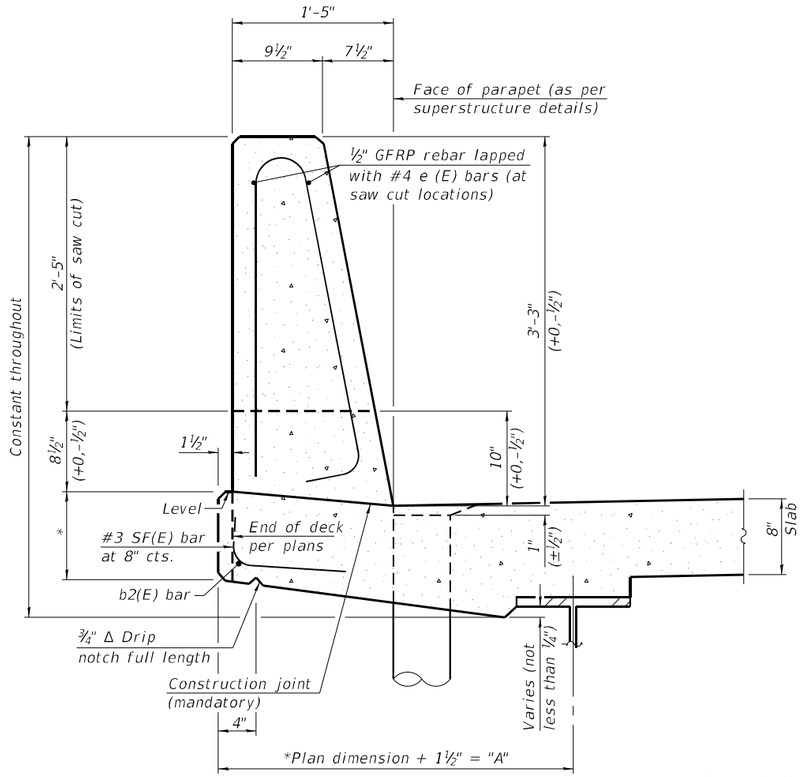

39" CONSTANT-SLOPE PARAPET SECTION

(Showing dimensions, d(E), and ½" Ø GFRP rebar)

STEEL SUPERSTRUCTURES

*See Superstructure Details.

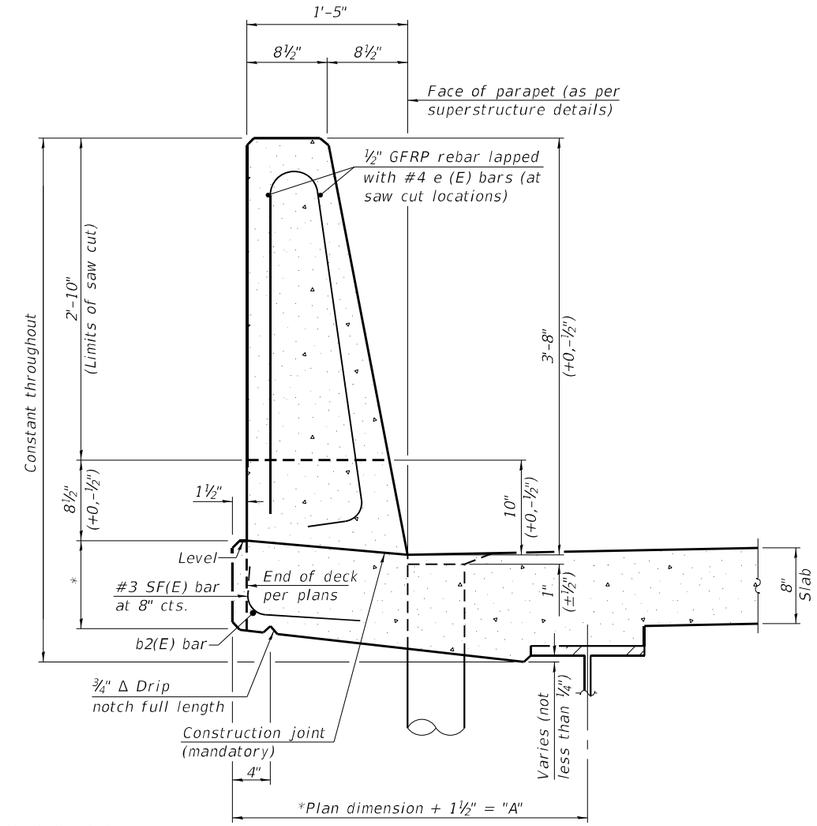

44" CONSTANT-SLOPE PARAPET SECTION

(Showing dimensions, d(E), and ½" Ø GFRP rebar)

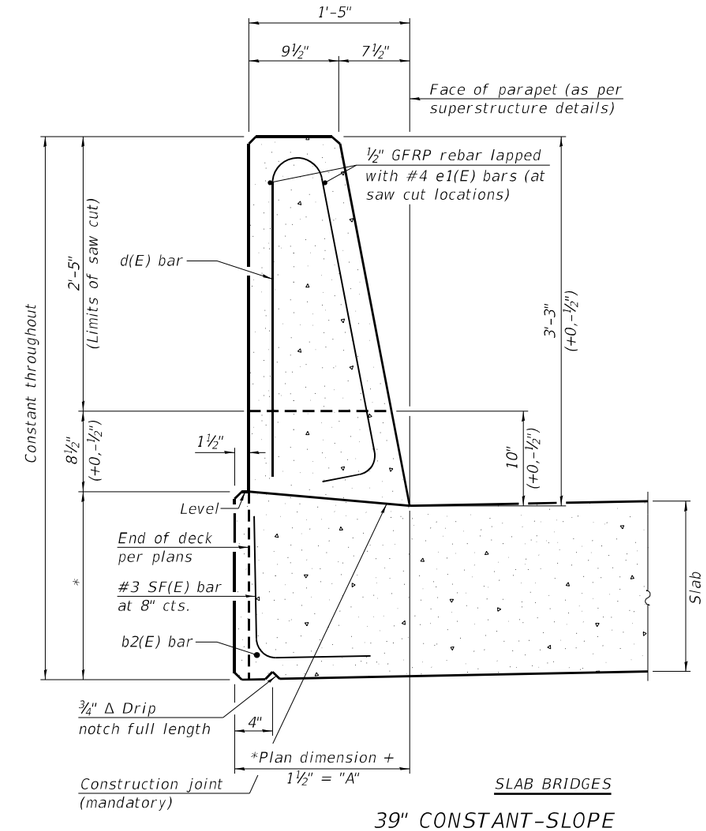

SLAB BRIDGES

39" CONSTANT-SLOPE PARAPET SECTION

(Showing dimensions, d(E), and ½" Ø GFRP rebar)

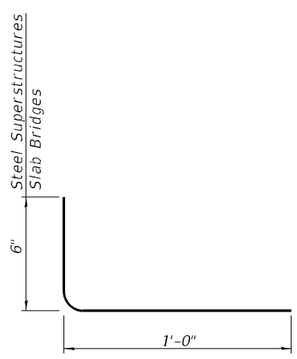

SF(E) BAR

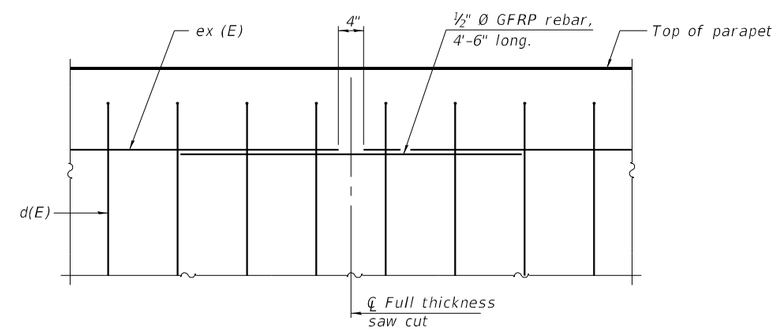

DETAIL - GFRP REBAR STIFFENING ELEVATION

(Place as shown in parapet section at each parapet joint location.)

Notes:

1. All dimensions shall remain the same as shown on superstructure details, except dimension "A" which is to be revised as shown.
   Additional concrete needed to revise dimension "A" (39" and 44" parapets):
   Steel Superstructures: 0.00348 cu. yds./ft.
   Slab Bridge Superstructures: cu. yds./ft.
2. Place full depth aluminum sheets as shown on superstructure details.
3. Replace all cork joint filler locations with a full thickness saw cut.
4. Steel and slab superstructures shown. Other superstructure types similar.
5. Slip forming is not allowed on parapets with form liners.

SFP 39-44 10/27/2023

MODEL: Default
FILE NAME: S:\OL\6300-6399\6346\113\Drawings\CAD\Micro-SSA\CAD_Sheets\0160375112O-62W38-045-CPSFO.dgn

STRAND ASSOCIATES
1170 SOUTH HOUBOLT ROAD
JOLIET, ILLINOIS 60431
(815) 744-4200
IDFPR NO. 184-001273

USER NAME = codyh	DESIGNED - TJE	REVISED -	
	CHECKED - KRB	REVISED -	
PLOT SCALE = 0:2.0000 ':" / in.	DRAWN - CJH	REVISED -	
PLOT DATE = 9/20/2024	CHECKED - TJE	REVISED -	

STATE OF ILLINOIS
DEPARTMENT OF TRANSPORTATION

CONCRETE PARAPET SLIP FORMING OPTION
STRUCTURE NO. 016-0375 (NB) AND 016-1120 (SB)

SHEET 45 OF 48 SHEETS

F.A. RTE.	SECTION	COUNTY	TOTAL SHEETS	SHEET NO.
342	(531) BR 23	COOK	1211	803

CONTRACT NO. 62W38

ILLINOIS | FED. AID PROJECT

9/20/2024 2:14:59 PM

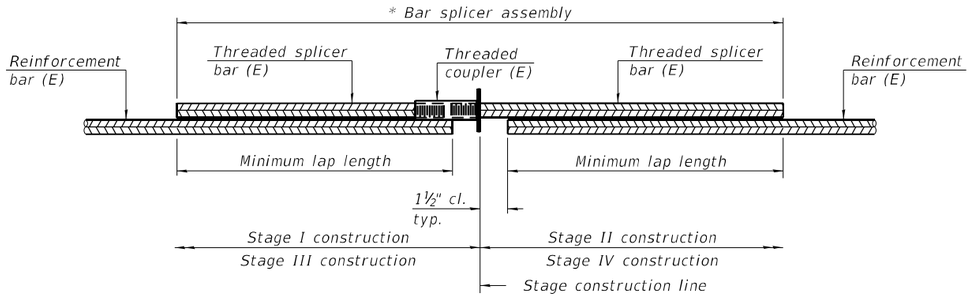

STANDARD BAR SPLICER ASSEMBLY PLAN

Only bar splicer assemblies as presented on the approved QPL list may be used.

Threaded splicer bar length = min. lap length + 1½" + thread length

* Epoxy not required on Bar Splicer Assembly components used in conjunction with black bars.

STRUCTURE NO. 016-0375 NB

Location	Bar Size	No. Assemblies required	Minimum lap length
Top Deck	#5	313	3'-0"
Bottom Deck	#5	191	3'-6"
S. Approach Slab	#5	86	3'-0"
S. Approach Slab	#8	60	4'-9"
N. Approach Slab	#5	86	3'-0"
N. Approach Slab	#8	60	4'-9"

STRUCTURE NO. 016-1120 SB

Location	Bar Size	No. Assemblies required	Minimum lap length
Top Deck	#5	313	3'-0"
Bottom Deck	#5	191	3'-6"
S. Approach Slab	#5	86	3'-0"
S. Approach Slab	#8	60	4'-9"
N. Approach Slab	#5	86	3'-0"
N. Approach Slab	#8	60	4'-9"

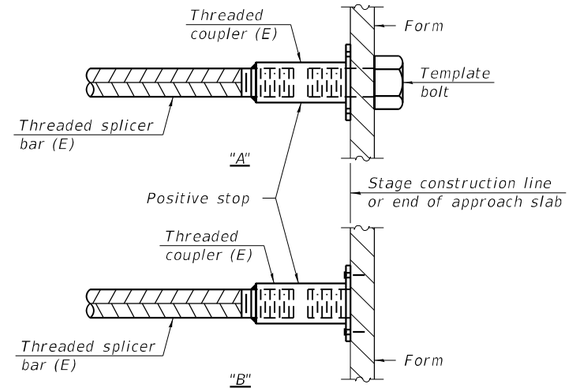

INSTALLATION AND SETTING METHODS

"A" : Set bar splicer assembly by means of a template bolt.
"B" : Set bar splicer assembly by nailing to wood forms or cementing to steel forms.
(E) : Indicates epoxy coating.

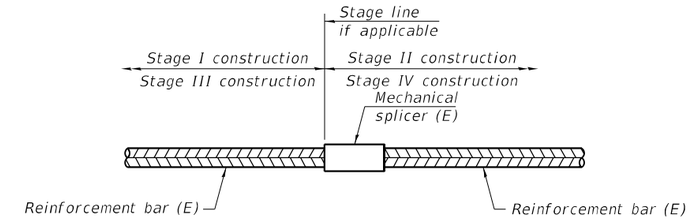

STANDARD MECHANICAL SPLICER

STRUCTURE NO. 016-0375 NB

S. Abut. Diaphragm	#4	2
S. Abut. Diaphragm	#6	9
N. Abut. Diaphragm	#4	2
N. Abut. Diaphragm	#6	9
S. Abut.	#5	2
N. Abut.	#5	2

STRUCTURE NO. 016-1120 SB

S. Abut Diaphragm	#4	2
S. Abut Diaphragm	#6	9
N. Abut Diaphragm	#4	2
N. Abut Diaphragm	#6	9
S. Abut.	#5	2
N. Abut.	#5	2

Notes:
1. Splicer bars shall be deformed with threaded ends and have a minimum 60 ksi yield strength.
2. All reinforcement shall be lapped and tied to the splicer bars.
3. Bar splicer assemblies shall be epoxy coated according to the requirements for reinforcement bars. See Section 508 of the Standard Specifications.
4. See approved list of bar splicer assemblies and mechanical splicers for alternatives.

BSD-1 2-1-2023

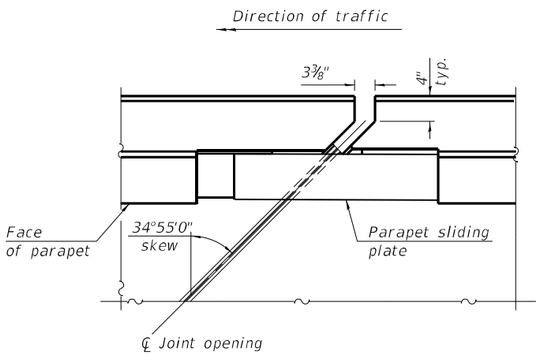

PLAN AT END OF APPROACH

(Drawn for SB IL-53 North approach sliding plate detail, other views similar.)

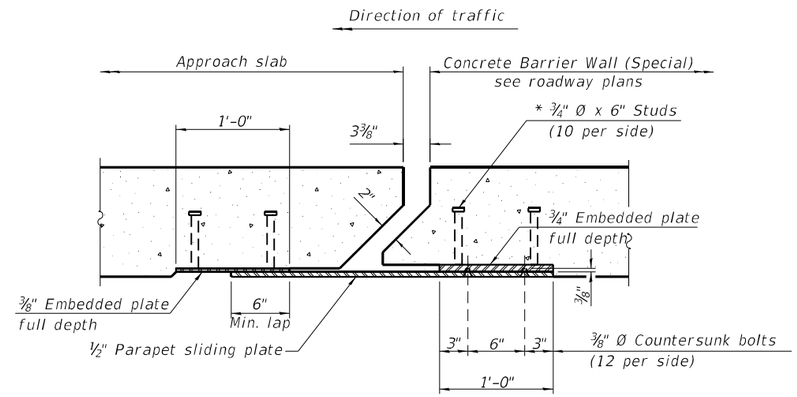

SECTION B-B

(Drawn for SB IL-53 North approach sliding plate detail, other views similar.)

Notes:

The preformed pavement joint seal shall be made continuous and shall have a minimum thickness of ¼". The configuration of the stripseal shall match the configuration of the locking edge rails. Open or "webbed" strip seal gland configurations are not permitted. The gland shall be sized for a maximum rated movement of 4 inches.

The manufacturer's recommended installation methods shall be followed.

All steel components shall be galvanized after fabrication according to Article 520.03 of the Standard Specifications.

Cost of parapet sliding plates, embedded plates, and anchorage studs included with Concrete Barrier Wall (Special)

39" constant slope barrier shown, 44" constant slope barrier similar as noted.

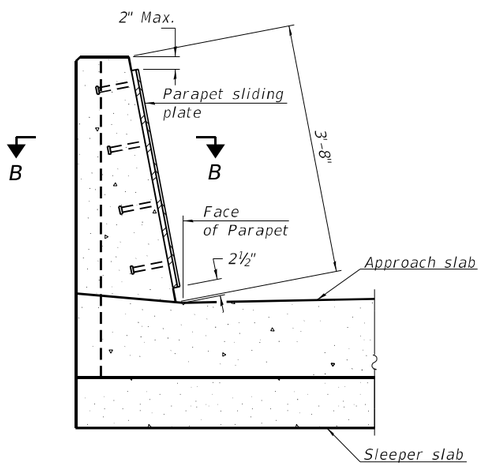

SECTION AT END OF APPROACH

Notes:

1. See bridge approach sheet 28

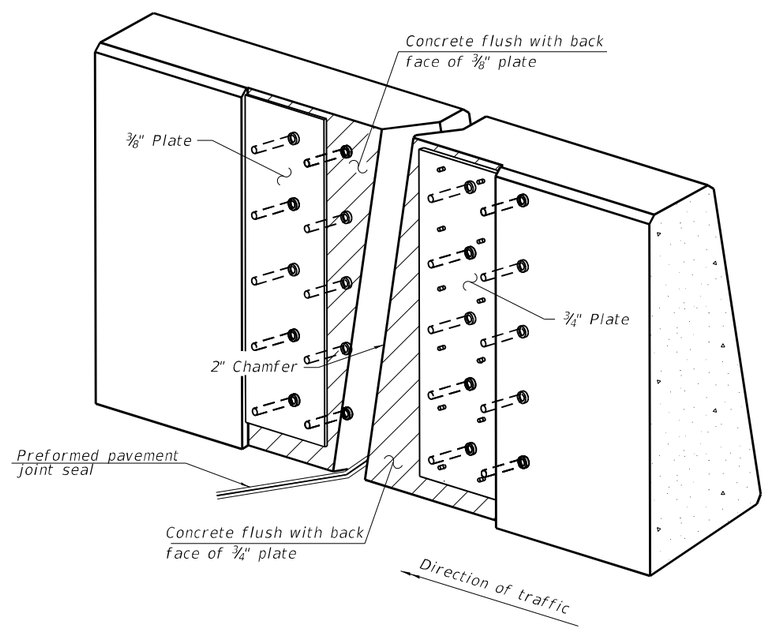

TRIMETRIC VIEW

(Showing embedded plates only)

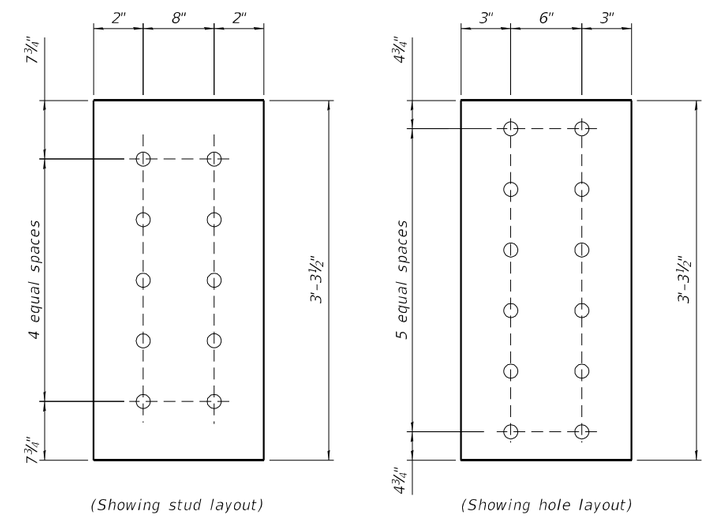

(Showing stud layout) (Showing hole layout)

EMBEDDED PLATE DETAIL

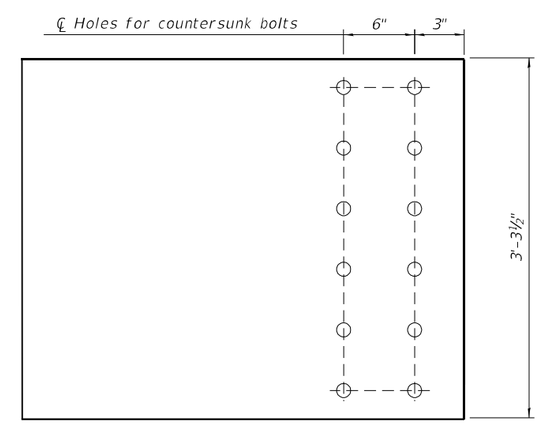

MEDIAN SLIDING PLATE

MODEL: Default
FILE NAME: S:\OL\6300--6399\6346\113\Drawings\CAD\Micro-SSA\CAD_Sheets\0160375\1120-62W38-046A-SP.dgn

STRAND ASSOCIATES 1170 SOUTH HOUBOLT ROAD JOLIET, ILLINOIS 60431 (815) 744-4200 IDFPR NO. 184-001273	USER NAME = codyh	DESIGNED - JAS	REVISED -	STATE OF ILLINOIS DEPARTMENT OF TRANSPORTATION	MEDIAN SLIDING PLATE STRUCTURE NO. 016-0375 (NB) AND 016-1120 (SB)	F.A. RTE. 342	SECTION (531) BR 23	COUNTY COOK	TOTAL SHEETS 1211 / SHEET NO. 804A
		CHECKED - NDR	REVISED -					CONTRACT NO. 62W38	
	PLOT SCALE = 0:2.0000 ':" / in.	DRAWN - JAS	REVISED -					ILLINOIS	FED. AID PROJECT
	PLOT DATE = 9/20/2024	CHECKED - NDR	REVISED -		SHEET 46A OF 48 SHEETS				

9/20/2024 2:15:01 PM

SOIL BORING LOG

Date 05/07/23

ROUTE FAP 342 DESCRIPTION IL 53 over Industrial Ave LOGGED BY Gonzalez (BR)

SECTION 2018-100-BR LOCATION SE 1/4, SEC. 23, TWP. 42N, RNG. 10E, 3rd PM, Latitude 42.09593014, Longitude 88.02682141

COUNTY Cook DRILLING METHOD Hollow Stem Auger (8" O.D., 3.25" I.D.) HAMMER TYPE Auto 140 lb HE 105

STRUCT. NO. 016-1120
Station

BORING NO. GC-15
Station 3258+66
Offset 28.8 ft RT
Ground Surface Elev. 742.7 ft

Surface Water Elev. ft
Stream Bed Elev. ft

Groundwater Elev.:
First Encounter Dry ft
Upon Completion Dry ft
After Hrs. Filled ft

Description	Elev.	DEPTH (ft)	BLOWS (/6")	UCS Qu (tsf)	MOIST (%)
CONRETE - 12"	741.7				
Medium Stiff, Brown, Moist, CLAY, Trace Gravel			4		
			2 3		16
Loose, Brown, Moist, Fine SAND	739.7				
Medium Stiff to Stiff, Brown, Moist, CLAY			3		
		-5	4 5	1.7 B	15
			3		
			4 5	2.2 B	19
Medium Stiff to Stiff, Dark Brown, Moist, CLAY	734.7		5		
		-10	3 3	1.6 B	23
			3		
			4 6		20
			2		
		-15	2 4	1.8 B	23
Stiff to Soft, Brown to Dark Brown, Moist to Wet, CLAY, Trace Gravel	727.2		3		
			4 4	3.7 B	26
			3		
		-20	2 5	2.0 P	15
Stiff to Soft, Brown to Dark Brown, Moist to Wet, CLAY, Trace Gravel *(continued)*			6		
			3 4	1.0 B	20
			2		
		-25	4 7	1.2 B	22
			0		
	715.7		0 4	0.2 B	25
Medium Stiff to Stiff, Brown, Wet, CLAY, Trace Gravel			5		
		-30	6 5		19
			3		
		-35	3 5	1.9 B	15
		-40	3 4	1.2 B	17

The Unconfined Compressive Strength (UCS) Failure Mode is indicated by (B-Bulge, S-Shear, P-Penetrometer, M-Modified SPT)
The SPT (N value) is the sum of the last two blow values in each sampling zone (AASHTO T206)

BBS, form 137 (Rev. 8-99)

SOIL BORING LOG

Date 05/07/23

ROUTE FAP 342 DESCRIPTION IL 53 over Industrial Ave LOGGED BY Gonzalez (BR)

SECTION 2018-100-BR LOCATION SE 1/4, SEC. 23, TWP. 42N, RNG. 10E, 3rd PM, Latitude 42.09593014, Longitude 88.02682141

COUNTY Cook DRILLING METHOD Hollow Stem Auger (8" O.D., 3.25" I.D.) HAMMER TYPE Auto 140 lb HE 105

STRUCT. NO. 016-1120
Station

BORING NO. GC-15
Station 3258+66
Offset 28.8 ft RT
Ground Surface Elev. 742.7 ft

Surface Water Elev. ft
Stream Bed Elev. ft

Groundwater Elev.:
First Encounter Dry ft
Upon Completion Dry ft
After Hrs. Filled ft

Description	Elev.	DEPTH (ft)	BLOWS (/6")	UCS Qu (tsf)	MOIST (%)
Medium Stiff to Stiff, Brown, Wet, CLAY, Trace Gravel *(continued)*			4		
			6 8	2.7 B	17
Boring terminated at 45 feet.	697.7	-45			
		-50			
		-55			
		-60			

The Unconfined Compressive Strength (UCS) Failure Mode is indicated by (B-Bulge, S-Shear, P-Penetrometer, M-Modified SPT)
The SPT (N value) is the sum of the last two blow values in each sampling zone (AASHTO T206)

BBS, form 137 (Rev. 8-99)

SOIL BORING LOG

Page 1 of 2

Date 05/08/23

ROUTE FAP 342 **DESCRIPTION** IL 53 over Industrial Ave **LOGGED BY** Gonzalez (BR)

SECTION 2018-100-BR **LOCATION** NE 1/4, **SEC.** 26, **TWP.** 42N, **RNG.** 10E, 3rd **PM**,
Latitude 42.09530666, **Longitude** 88.02743663

COUNTY Cook **DRILLING METHOD** Hollow Stem Auger (8" O.D., 3.25" I.D.) **HAMMER TYPE** Auto 140 lb HE 105

STRUCT. NO. 016-1120
Station

BORING NO. GC-16
Station 3255+83
Offset 25.8 ft RT
Ground Surface Elev. 744.3 ft

Surface Water Elev. ft
Stream Bed Elev. ft

Groundwater Elev.:
First Encounter Dry ft
Upon Completion 714.3 ft ▽
After Hrs. Filled ft

Description	Elev.	DEPTH (ft)	BLOWS (/6")	UCS Qu (tsf)	MOIST (%)
CONRETE - 11"	743.4				
Loose, Brown, Moist, Fine SAND	742.8		2		
Medium Stiff to Stiff, Brown, Moist to Wet, CLAY, Trace Gravel			4	1.2	19
			3	B	
			3		
		-5	5	4.9	11
			7	B	
			5		
			6	4.9	16
			6	B	
			4		
		-10	7	5.6	13
			8	B	
			2		
			5	4.1	19
			7	B	
			4		
		-15	6	2.6	18
			9	B	
			3		
	727.2		3	1.4	26
Organics			8	B	
			4		
	724.3	-20	7	2.0	21
			9	P	

Description	DEPTH (ft)	BLOWS (/6")	UCS Qu (tsf)	MOIST (%)
Stiff to Hard, Brown, Dry to Wet, CLAY, Trace Gravel		6		
		8	3.5	15
		10	S	
		4		
		5	3.7	17
	-25	8	B	
		4		
		5	2.1	13
		6	B	
		3		
	▽ -30	3	1.4	12
		5	B	
		4		
	-35	5	2.8	18
		7	B	
		49		
	-40	50	1.6	17
		24	B	

The Unconfined Compressive Strength (UCS) Failure Mode is indicated by (B-Bulge, S-Shear, P-Penetrometer, M-Modified SPT)
The SPT (N value) is the sum of the last two blow values in each sampling zone (AASHTO T206)

BBS, form 137 (Rev. 8-99)

SOIL BORING LOG

Page 2 of 2

Date 05/08/23

ROUTE FAP 342 **DESCRIPTION** IL 53 over Industrial Ave **LOGGED BY** Gonzalez (BR)

SECTION 2018-100-BR **LOCATION** NE 1/4, **SEC.** 26, **TWP.** 42N, **RNG.** 10E, 3rd **PM**,
Latitude 42.09530666, **Longitude** 88.02743663

COUNTY Cook **DRILLING METHOD** Hollow Stem Auger (8" O.D., 3.25" I.D.) **HAMMER TYPE** Auto 140 lb HE 105

STRUCT. NO. 016-1120
Station

BORING NO. GC-16
Station 3255+83
Offset 25.8 ft RT
Ground Surface Elev. 744.3 ft

Surface Water Elev. ft
Stream Bed Elev. ft

Groundwater Elev.:
First Encounter Dry ft
Upon Completion 714.3 ft ▽
After Hrs. Filled ft

Description	Elev.	DEPTH (ft)	BLOWS (/6")	UCS Qu (tsf)	MOIST (%)
Stiff to Hard, Brown, Dry to Wet, CLAY, Trace Gravel *(continued)*			5		
			5	0.8	24
	699.3	-45	6	B	
Boring terminated at 45 feet.					
		-50			
		-55			
		-60			

The Unconfined Compressive Strength (UCS) Failure Mode is indicated by (B-Bulge, S-Shear, P-Penetrometer, M-Modified SPT)
The SPT (N value) is the sum of the last two blow values in each sampling zone (AASHTO T206)

BBS, form 137 (Rev. 8-99)

MODEL: Default
FILE NAME: S:\IDL6300--63996346\113\Drawings\CAD\Micro-SSA\CAD_Sheets\0160375\1120-62W38-048-SBL.dgn

STRAND ASSOCIATES
1170 SOUTH HOUBOLT ROAD
JOLIET, ILLINOIS 60431
(815) 744-4200
IDFPR NO. 184-001273

USER NAME = codyh	DESIGNED -	REVISED -	
	CHECKED -	REVISED -	
PLOT SCALE = 0:2.0000 ':" / in.	DRAWN - CJH	REVISED -	
PLOT DATE = 9/20/2024	CHECKED - TJE	REVISED -	

STATE OF ILLINOIS
DEPARTMENT OF TRANSPORTATION

SOIL BORINGS
STRUCTURE NO. 016-0375 (NB) AND 016-1120 (SB)

SHEET 48 OF 48 SHEETS

F.A. RTE.	SECTION	COUNTY	TOTAL SHEETS	SHEET NO.
342	(531) BR 23	COOK	1211	806
		CONTRACT NO. 62W38		
		ILLINOIS	FED. AID PROJECT	

9/20/2024 2:15:10 PM

FEDERAL-AID ROUTE NO.	SEC.	COUNTY	TOTAL SHEETS	SHEET NO.
S.B.I. 53 (F.A.-61)	531-2-HB-1	COOK	21	1
U.P.R. REG. NO. 4	ILLINOIS	PROJECT	U-184 (29)	

20

STATE OF ILLINOIS
DEPARTMENT OF PUBLIC WORKS AND BUILDINGS
DIVISION OF HIGHWAYS

INDEX OF SHEETS ON SHEET NO. 2

PLANS FOR PROPOSED FEDERAL AID HIGHWAY

DISTRICT 10
RELOCATED S. B. I. ROUTE 53 (F. A. ROUTE 61) SECTION 531-2 HB-1
DUAL STRUCTURES OVER INDUSTRIAL AVENUE
PROJECT U-184 (29)
COOK COUNTY

PROJECT LENGTH 155.50 LIN. FT. (0.029 MILES)

SECTION 531-2-HB-1 INCLUDES THE CONSTRUCTION OF DUAL 3-SPAN CONTINUOUS WIDE FLANGE BEAM GRADE SEPARATION STRUCTURES (TO CARRY RELOCATED ROUTE 53 OVER INDUSTRIAL AVENUE), WITH SPANS 2 AT 45'-2" AND 1 AT 59'-2" ON OPEN R. C. ABUTMENTS AND R. C. PIERS, AT STATION 243+49.94 IN THE CITY OF ROLLING MEADOWS.

FOR INFORMATION ONLY

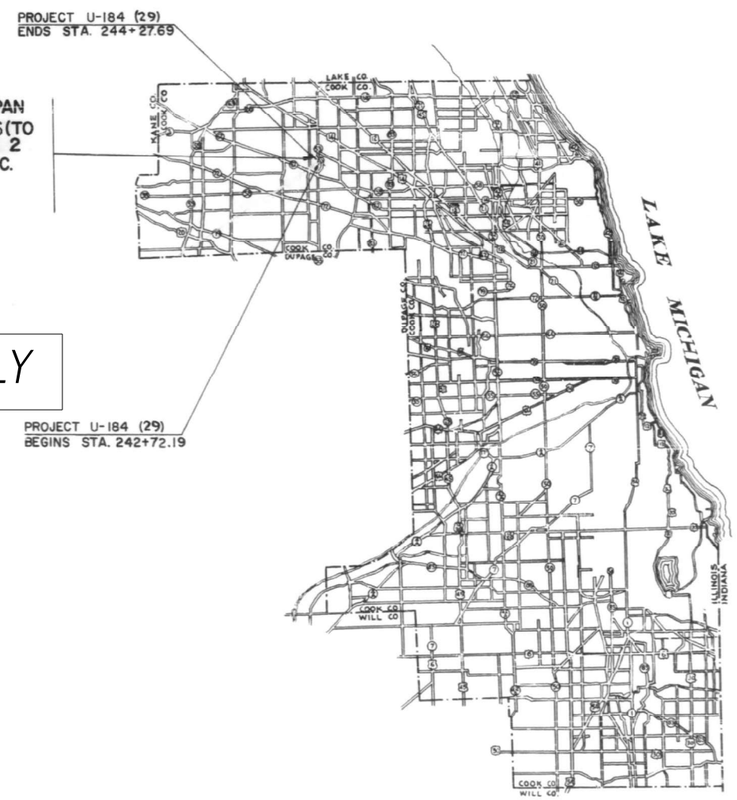

LOCATION OF SECTION INDICATED THUS:—

STATE OF ILLINOIS
DEPARTMENT OF PUBLIC WORKS AND BUILDINGS
DIVISION OF HIGHWAYS

SUBMITTED 4-5 1963 — DISTRICT ENGINEER

EXAMINED April 19 1963 — ENGINEER OF BRIDGE PLANS AND CONTRACTS

PASSED April 19 1963 — ENGINEER OF DESIGN

APPROVED April 19 1963 — CHIEF HIGHWAY ENGINEER

APPROVED April 19 1963 — DIRECTOR

DEPARTMENT OF COMMERCE
BUREAU OF PUBLIC ROADS

APPROVED

DIVISION ENGINEER — DATE

JOB NO 23002

COOK COUNTY SECTION 531-2-HB-1 F. A. ROUTE 61

MODEL: Default
FILE NAME: S:\IDL\6300-6399\6346\113\Drawings\CAD\Micro-SSA\CAD_Sheets\016037511 20-62W38-049-EX.dgn

STRAND ASSOCIATES®
1170 SOUTH HOUBOLT ROAD
JOLIET, ILLINOIS 60431
(815) 744-4200
IDFPR NO. 184-001273

USER NAME = codyh	DESIGNED -	REVISED -	
	CHECKED -	REVISED -	
PLOT SCALE = 0:2.0000 ':" / in.	DRAWN - CJH	REVISED -	
PLOT DATE = 9/20/2024	CHECKED - TJE	REVISED -	

STATE OF ILLINOIS
DEPARTMENT OF TRANSPORTATION

EXISTING DRAWINGS
STRUCTURE NO. 016-0375 (NB) AND 016-1120 (SB)

F.A. RTE.	SECTION	COUNTY	TOTAL SHEETS	SHEET NO.
342	(531) BR 23	COOK	1211	807
		CONTRACT NO. 62W38		
	ILLINOIS	FED. AID PROJECT		

9/20/2024 2:15:17 PM

STATE OF ILLINOIS
DEPARTMENT OF PUBLIC WORKS & BUILDINGS
DIVISION OF HIGHWAYS

ROUTE NO.	SECTION	COUNTY	TOTAL SHEETS	SHEET NO.
S.B.I. 53 (F.A. 61)	531-2-HB-1	Cook	21	11
FED. ROAD DIST. NO. 7	ILLINOIS	FED. AID PROJECT-		

SHEET NO. 6
13 SHEETS

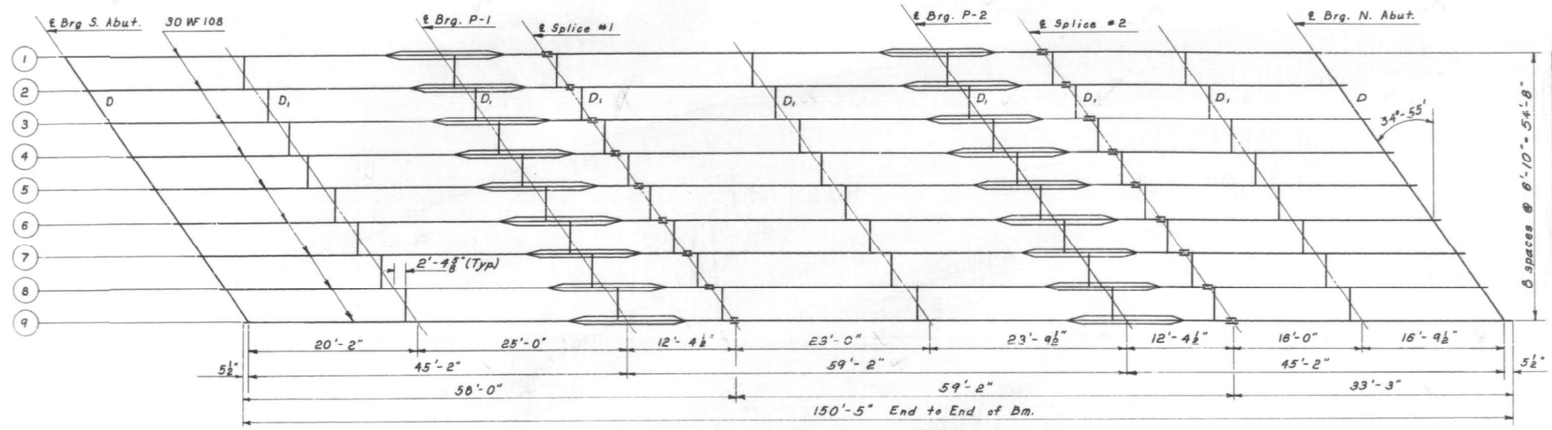

PLAN OF STRUCTURAL STEEL

TOP BEAM ELEVATIONS

Beam №	1	2	3	4	5	6	7	8	9
WEST BR. ℄ Brg. S. Abt.	745.17	745.02	744.87	744.72	744.56	744.39	744.26	744.05	743.89
℄ Brg. P-1	744.96	744.79	744.64	744.49	744.32	744.16	744.03	743.82	743.65
℄ Spli. #1	744.88	744.73	744.58	744.43	744.26	744.10	743.97	743.76	743.60
℄ Brg P-2	744.70	744.55	744.40	744.25	744.08	743.92	743.79	743.58	743.42
℄ Spli. #2	744.65	744.50	744.35	744.20	744.03	743.87	743.70	743.53	743.37
℄ Brg. N. Abt.	744.52	744.37	744.22	744.07	744.90	743.74	743.57	743.40	743.24
EAST BR. ℄ Brg. S. Abt.	745.28	745.13	744.97	744.82	744.67	744.51	744.34	744.16	743.99
℄ Brg. P-1	745.03	744.88	744.72	744.57	744.42	744.26	744.09	744.91	743.74
℄ Spli. #1	744.96	744.81	744.65	744.50	744.35	744.19	744.02	743.84	743.67
℄ Brg. P-2	744.68	744.53	744.37	744.22	744.07	743.91	743.74	743.56	743.39
℄ Spli. #2	744.81	744.46	744.30	744.15	744.00	743.84	743.67	743.49	743.32
℄ Brg. N. Abt.	744.44	744.29	744.13	743.98	743.83	743.67	743.50	743.32	743.15

FOR INFORMATION ONLY

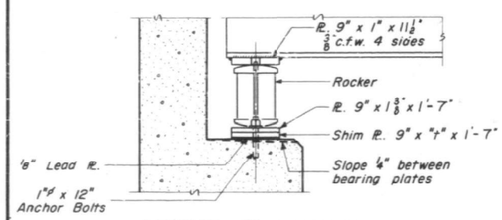

SECTION AT ABUTMENT

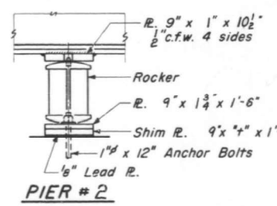

PIER #2

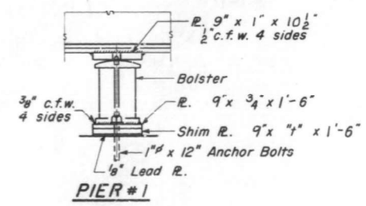

PIER #1

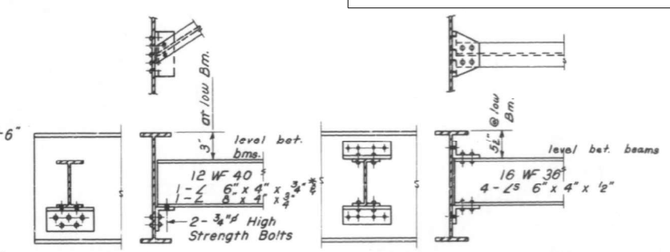

DIAPHRAGM D

32 Required
* See Sec. B-B on Sheet #10

DIAPHRAGM D1

112 Required

VALUE OF "t"

Beam №	1	2	3	4	5	6	7	8	9
West Br.	1/16"	1/16"	0"	0"	0"	0"	1/2"	0"	0"
East Br.	1/4"	1/8"	0"	0"	1/8"	1/4"	3/16"	1/16"	0"

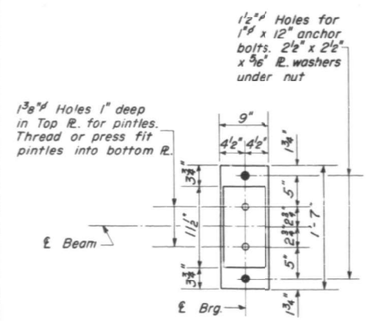

PLAN

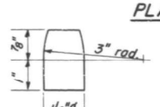

DETAIL OF PINTLE

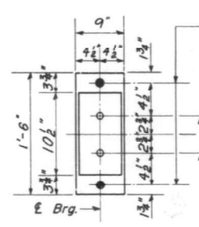

PLAN

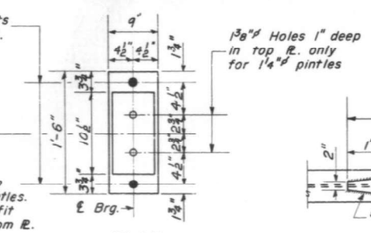

PLAN

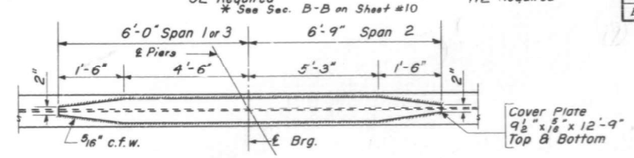

DETAIL OF COVER PLATE

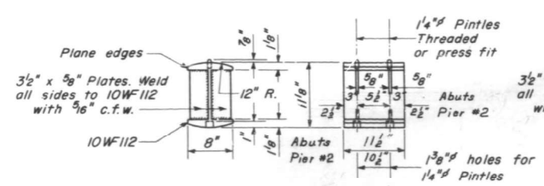

DETAIL OF ROCKER AT ABUTS. & P-2

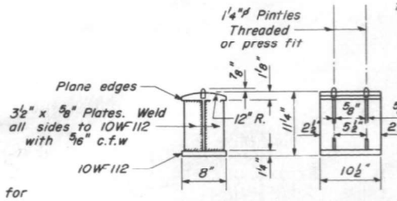

DETAIL OF BOLSTER AT PIER #1

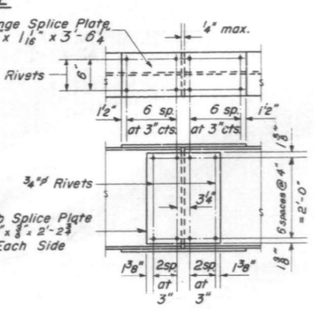

DETAIL OF SPLICE

DESIGNED	W. Hering	
CHECKED	Jerry L. Otto	
DRAWN	P.G. Barnett / W.A. Sousoman Jr.	
CHECKED	Jerry L. Otto	

MAR 21 1963
EXAMINED — ENGINEER OF BRIDGE AND TRAFFIC STRUCTURES
PASSED — ENGINEER OF DESIGN
APPROVED — CHIEF HIGHWAY ENGINEER

I-2-C 7-2-62 Rev. 11-9-62

STRUCTURAL STEEL
E. & W. BRIDGES

SBI. RT. 53 SEC. 531-2-HB-1
COOK COUNTY
STA. 243+49.94

STATE OF ILLINOIS
DEPARTMENT OF PUBLIC WORKS & BUILDINGS
DIVISION OF HIGHWAYS

ROUTE NO.	SECTION	COUNTY	TOTAL SHEETS	SHEET NO.
F.A.R. 53 (F.A. 617)	531-2-HB-1	Cook	21	13
FED. ROAD DIST. NO. 7	ILLINOIS	FED. AID PROJECT		

SHEET NO. 8
13 SHEETS

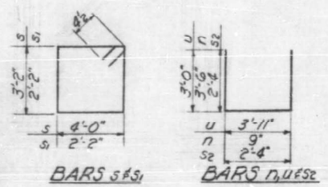

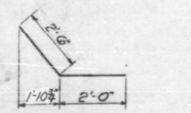

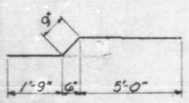

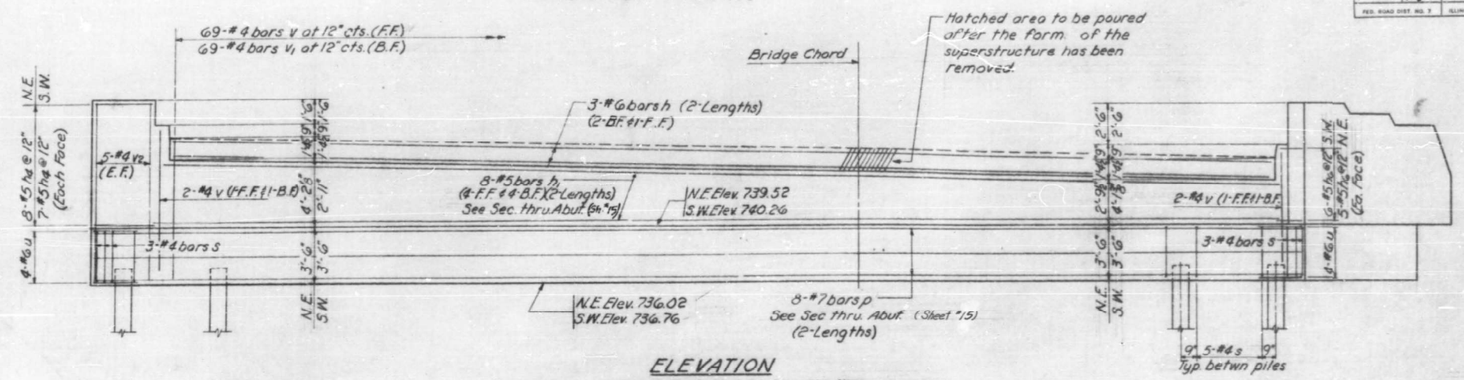

ELEVATION
North East Abut. Looking North
South West Abut. Looking South
For Seat Elev. see Sheet #15

PILE DATA

Type -------- Concrete
Capacity ---- 30 Tons
Est. Length --- 45'-0"
No. Reqd ---- 26 : 2 test piles
One @ Each Abut.

TWO ABUTMENTS BILL OF MATERIAL

Bar	No.	Size	Length	Shape
h	12	#6	34'-9"	
h1	32	#5	36'-0"	
h4	30	#5	3'-0"	
* h5	4	#4	7'-9"	
h6	22	#5	4'-6"	
* h10	36	#5	9'-3"	
* h12	3	#5	6'-9"	
* h13	3	#5	8'-9"	
* n	16	#8	7'-9"	U
p	32	#7	38'-3"	
* p2	12	#7	8'-6"	
s	132	#6	15'-1"	
* s1	16	#6	9'-5"	
* s2	116	#6	7'-0	
u	16	#6	9'-11"	
v	146	#4	7'-3"	
v1	138	#4	7'-6"	
v2	20	#4	9'-6"	
** Class X Concrete			Cu. Yds.	133.4
** Reinforcement Bars			Lbs.	9320
Concrete Piles			Lin. Ft.	1170
Test Piles (Concrete)			Ea.	2

*For spacing see sheet #15
**Including the quantity of wing wall

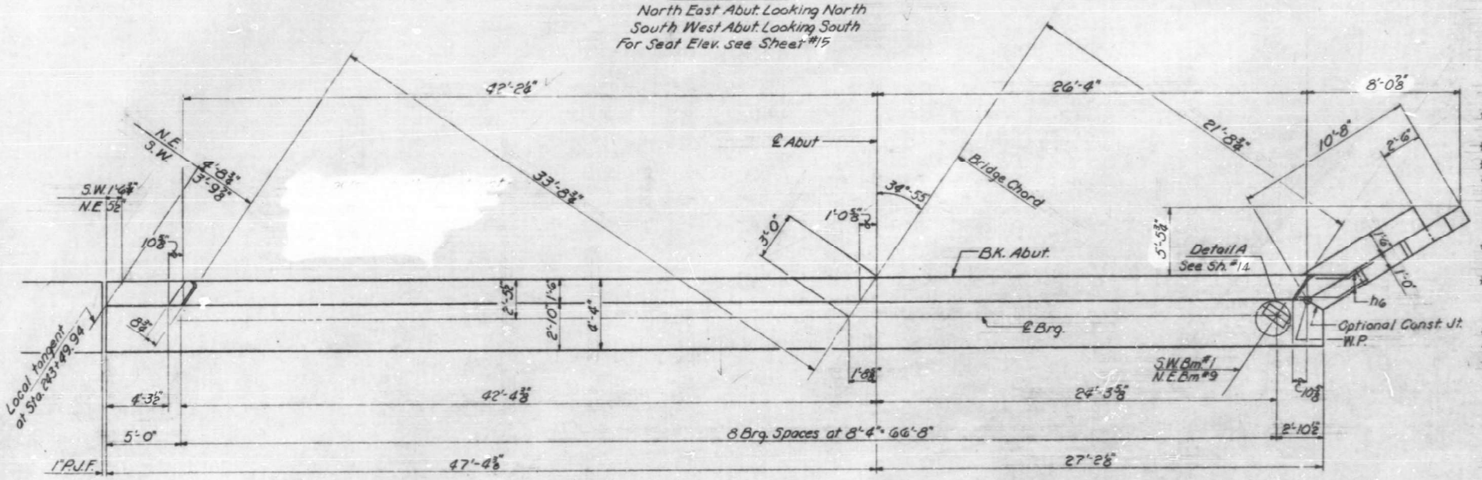

TOP VIEW

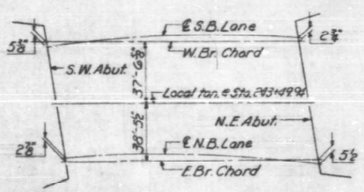

KEY PLAN
offset measured ⊥ Bk. of abut.

FOR INFORMATION ONLY

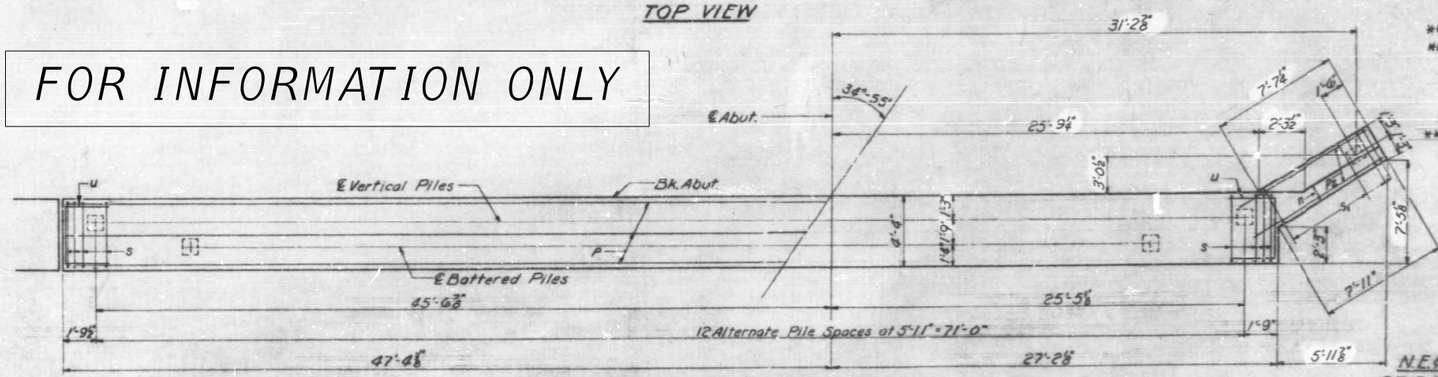

PLAN — PILE CAP

DESIGNED	Noi Hong	EXAMINED	MAR 21 1963 W.E. Baumann (Engineer of Bridge and Traffic Structures)
CHECKED	Jerry F. Pitt	PASSED	(Engineer of Design)
DRAWN	W.E. Dickerson	APPROVED	(Chief Highway Engineer)
CHECKED	Jerry F. Pitt		

N.E. & S.W. ABUTMENTS
S.B.I. RT. 53 SEC. 531-2-HB-1
COOK COUNTY
STA. 243+49.94

REVISED 4-9-63: Note Concerning Curb Radius Removed. W.H.

STRAND ASSOCIATES® 1170 SOUTH HOUBOLT ROAD JOLIET, ILLINOIS 60431 (815) 744-4200 IDFPR NO. 184-001273	USER NAME = codyh	DESIGNED -	REVISED -	STATE OF ILLINOIS DEPARTMENT OF TRANSPORTATION	EXISTING DRAWINGS STRUCTURE NO. 016-0375 (NB) AND 016-1120 (SB)
		CHECKED -	REVISED -		
	PLOT SCALE = 0:2.0000 ':" / in.	DRAWN - CJH	REVISED -		
	PLOT DATE = 9/20/2024	CHECKED - TJE	REVISED -		

F.A. RTE.	SECTION	COUNTY	TOTAL SHEETS	SHEET NO.
342	(531) BR 23	COOK	1211	809
		CONTRACT NO. 62W38		
		ILLINOIS	FED. AID PROJECT	

MODEL: Default
FILE NAME: S:\IOL\6300-6399\6346\113\Drawings\CAD\Micro-SSA\CAD_Sheets\0160375112O-62W38-051-EX.dgn
9/20/2024 2:15:34 PM

STATE OF ILLINOIS
DEPARTMENT OF PUBLIC WORKS & BUILDINGS
DIVISION OF HIGHWAYS

ROUTE NO.	SECTION	COUNTY	TOTAL SHEETS	SHEET NO.
L.R. 53 (F.A. 61)	531-2-HB-1	Cook	21	15
FED. ROAD DIST. NO. 7	ILLINOIS	FED. AID PROJECT-		

SHEET NO. 10
15 SHEETS

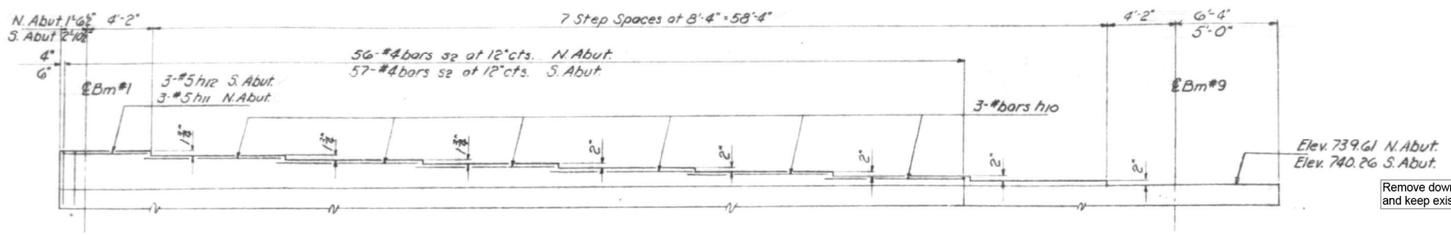

STEP ELEVATION
West Bridge Only
Bars h10 thru h12 & s2 billed with abut.

FOR INFORMATION ONLY

Remove down to each elevation and keep existing below

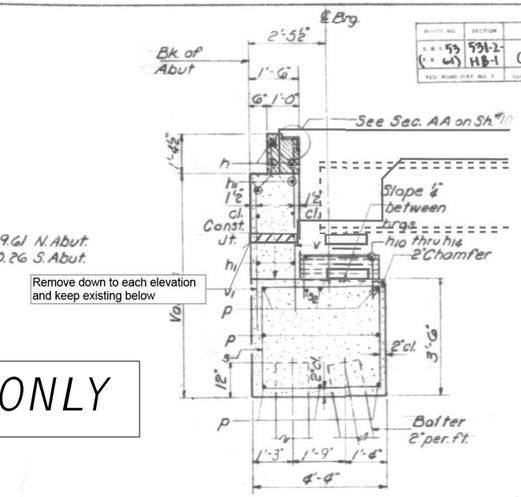

SECTION THRU ABUTMENT
Space v bars to miss Tees

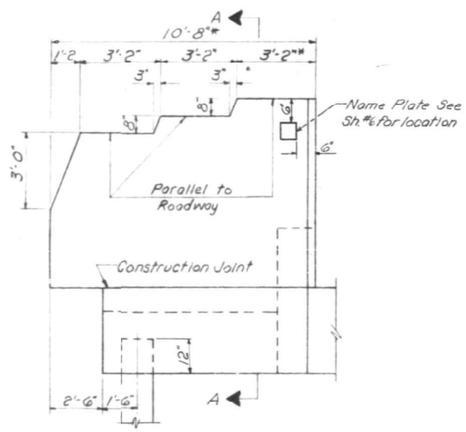

WING WALL ELEVATION
Dimensions
*Measured along inside face

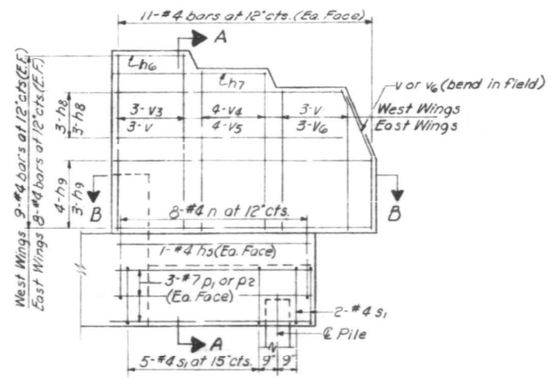

WING WALL ELEVATION
Reinforcement
Bars n, h5, p1, p2 & s1 billed with Abuts.

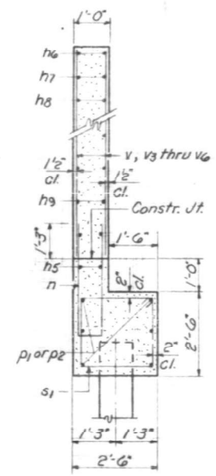

SECTION A-A

4-WINGS
BAR LIST

Bar	No.	Size	Length	Shape
h6	8	#4	2'-9"	—
h7	8	#4	5'-9"	—
h8	24	#4	9'-0"	—
h9	28	#4	10'-3"	—
v	28	#4	7'-3"	—
v3	12	#4	8'-6"	—
v4	16	#4	7'-9"	—
v5	16	#4	6'-6"	—
v6	16	#4	6'-0"	—

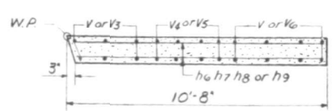

SECTION B-B

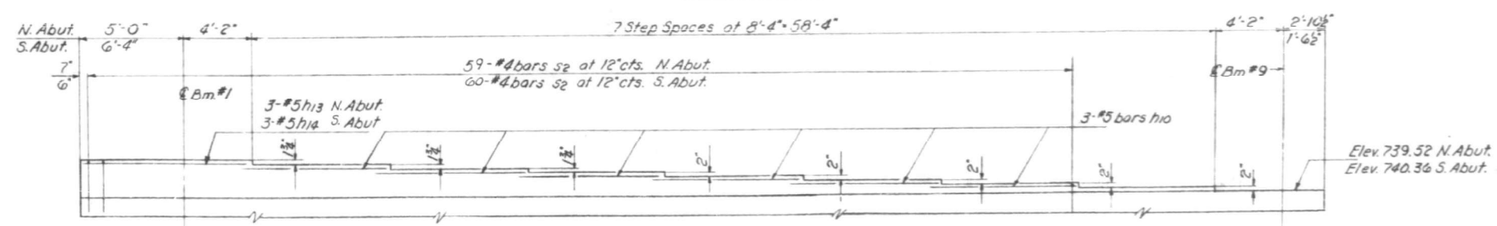

STEP ELEVATION
East Bridge Only
Bars h10, h13, h14 & s2 billed with abuts.

DESIGNED	W.E. Hess	EXAMINED	MAR 21 1963 W.E. Baumann, Engineer of Bridge and Traffic Structures
CHECKED	Jerry F. Otto	PASSED	E.P. Shurtz, Engineer of Design
DRAWN	W.E. Dickerson	APPROVED	V.E. Smith, Chief Highway Engineer
CHECKED	Jerry F. Otto		

WING WALLS
EAST & WEST BRIDGES
S.B.I. RT. 53 SEC. 531-2-HB-1
COOK COUNTY
STA. 243+49.94

STATE OF ILLINOIS
DEPARTMENT OF PUBLIC WORKS & BUILDINGS
DIVISION OF HIGHWAYS

(53 531-2-61) HB-1	COOK	21	16	SHEET NO. 11 / 13 SHEETS

FOR INFORMATION ONLY

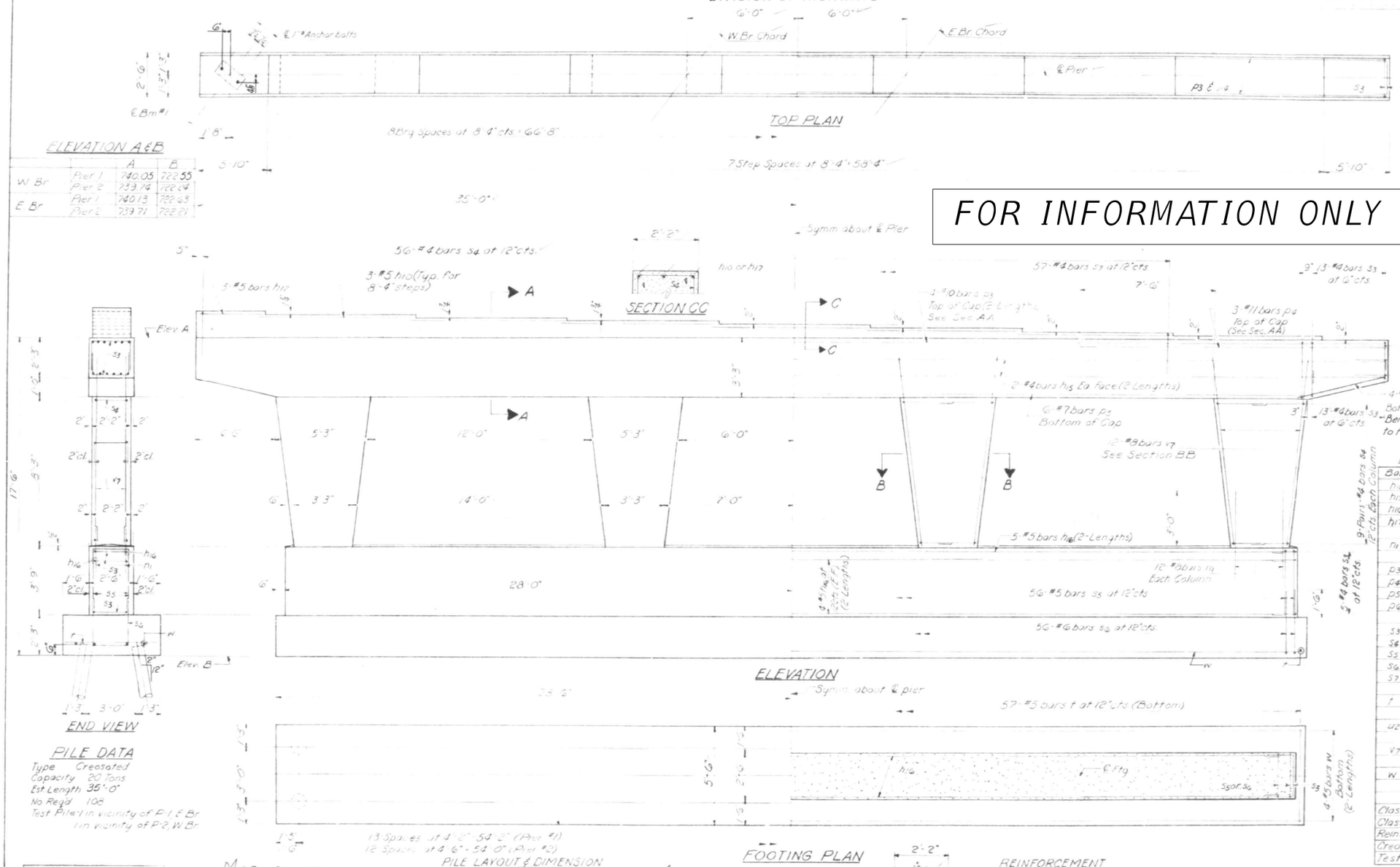

ELEVATION A & B

		A	B
W. Br	Pier 1	740.05	722.55
	Pier 2	739.74	722.04
E. Br	Pier 1	740.13	722.63
	Pier 2	739.71	722.21

PILE DATA

Type Creosoted
Capacity 20 Tons
Est Length 35'-0"
No Reqd 108
Test Piles: 1 in vicinity of P-1, E Br
1 in vicinity of P-2, W Br

A & B DIMENSIONS

Bar	A	B
s3	2'-2"	1'-11"
s4	1'-10"	3'-0"
s5	2'-2"	3'-6"
s6	2'-2"	3'-3"

REINFORCEMENT

NOTE:
Space reinforcement in cap to miss anchor bolts.
All edges shall have standard ¾" chamfers except as noted.
Pour steps monolithically with cap.

4-PIERS BILL OF MATERIAL

Bar	No.	Size	Length	Shape
h10	72	#5	9'-3"	—
h15	32	#4	35'-6"	—
h16	104	#5	28'-9"	—
h17	12	#5	5'-6"	—
n1	192	#8	6'-9"	—
p3	32	#10	36'-0"	—
p4	24	#11	19'-0"	—
p5	24	#7	56'-0"	—
p6	32	#5	7'-6"	—
s3	248	#4	6'-0"	□
s4	512	#4	7'-10"	□
s5	224	#5	9'-2"	□
s6	224	#6	8'-8"	□
s7	228	#4	10'-11"	□
t	228	#5	5'-3"	—
u2	24	#6	8'-1"	—
v7	192	#8	11'-0"	—
w	32	#5	29'-3"	—
Class A Exc. For Stru.			Cu. Yds.	430.0
Class X Concrete			Cu. Yds.	312.9
Reinforcement Bars			Lbs.	37,030
Creosoted Piles			Lin. Ft.	3780
Test Piles (Timber)			Ea.	2

9-Pairs #4 bars s4 12" cts. Each Column

5-#4 bars s4 at 12" cts

4-#5 bars w Bottom (2-Lengths)

MAR 21 1963

DESIGNED W.E. Heinz
CHECKED Jerry F. Potts
DRAWN W.E. Dickerson
CHECKED Jerry F. Potts
EXAMINED W.E. Baumann
APPROVED E.F. Sheets
APPROVED V.E. Stoy

PIERS
EAST & WEST BRIDGE
S.B.I. RT. 53 SEC. 531-2-HB-1
COOK COUNTY
STA. 243+49.94

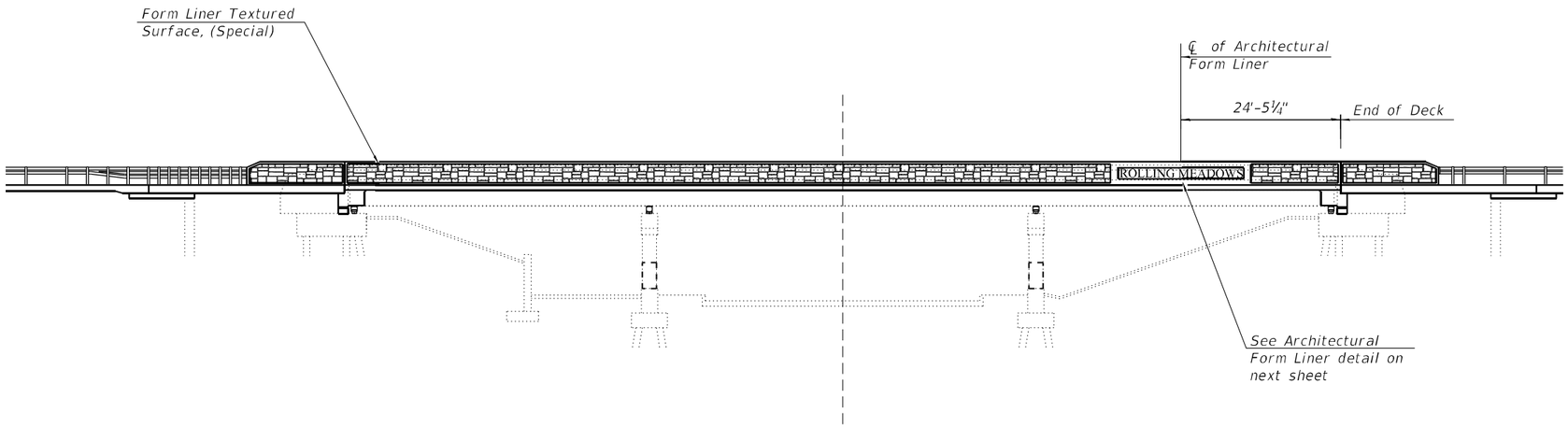

ELEVATION
(Looking East)

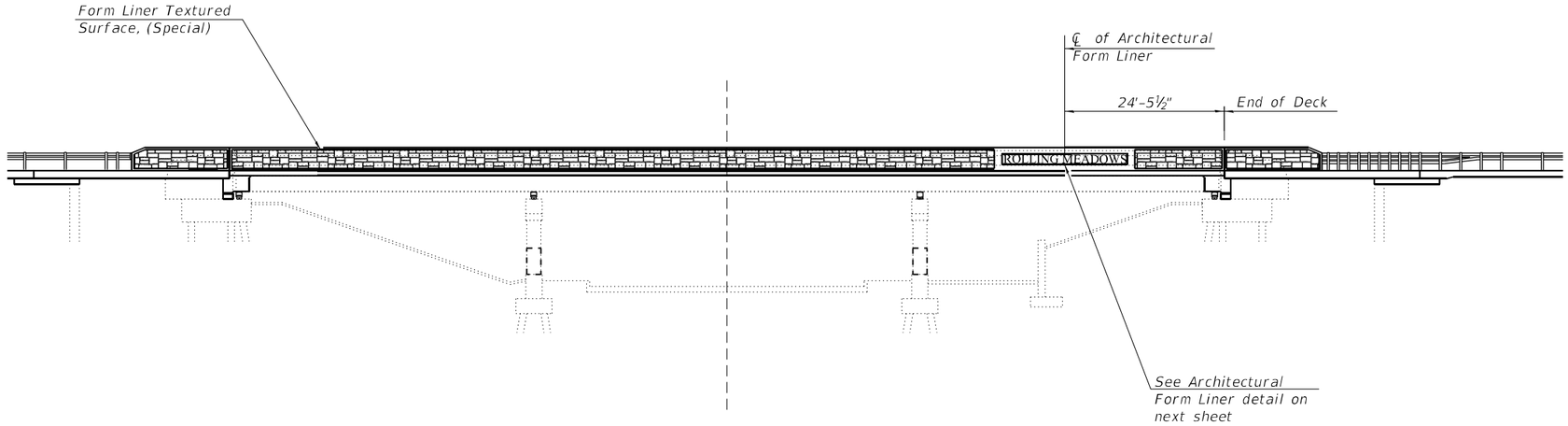

ELEVATION
(Looking West)

Notes:
1. For parapet dimensions not shown, see Bridge Plans.
2. Concrete Color Additive to be incorporated into superstructure Concrete for all parapet locations receiving Form Liner Treatment.

MODEL: Default
FILE NAME: S:\IOL\6300--6399\6346\113\Drawings\CAD\Micro-SS4\Exhibits\Aesthetic Exhibit_04_SN 016_0375 Industrial\016 0375-016 1120-C3-Bridge-Parapet01.dgn

STRAND ASSOCIATES
1170 SOUTH HOUBOLT ROAD
JOLIET, ILLINOIS 60431
(815) 744-4200
IDFPR NO. 184-001273

USER NAME = codyh	DESIGNED -	REVISED -	
	CHECKED -	REVISED -	
PLOT SCALE = 0:2.0000 ':" / in.	DRAWN - ZHH	REVISED -	
PLOT DATE = 9/20/2024	CHECKED - NDR	REVISED -	

STATE OF ILLINOIS
DEPARTMENT OF TRANSPORTATION

BRIDGE AESTHETIC PLAN (1 OF 2)
STRUCTURE NO. 016-0375 (NB) AND 016-1120 (SB)

F.A. RTE.	SECTION	COUNTY	TOTAL SHEETS	SHEET NO.
342	(531) BR 23	COOK	1211	812
		CONTRACT NO. 62W38		
	ILLINOIS	FED. AID PROJECT		

9/20/2024 2:16:01 PM

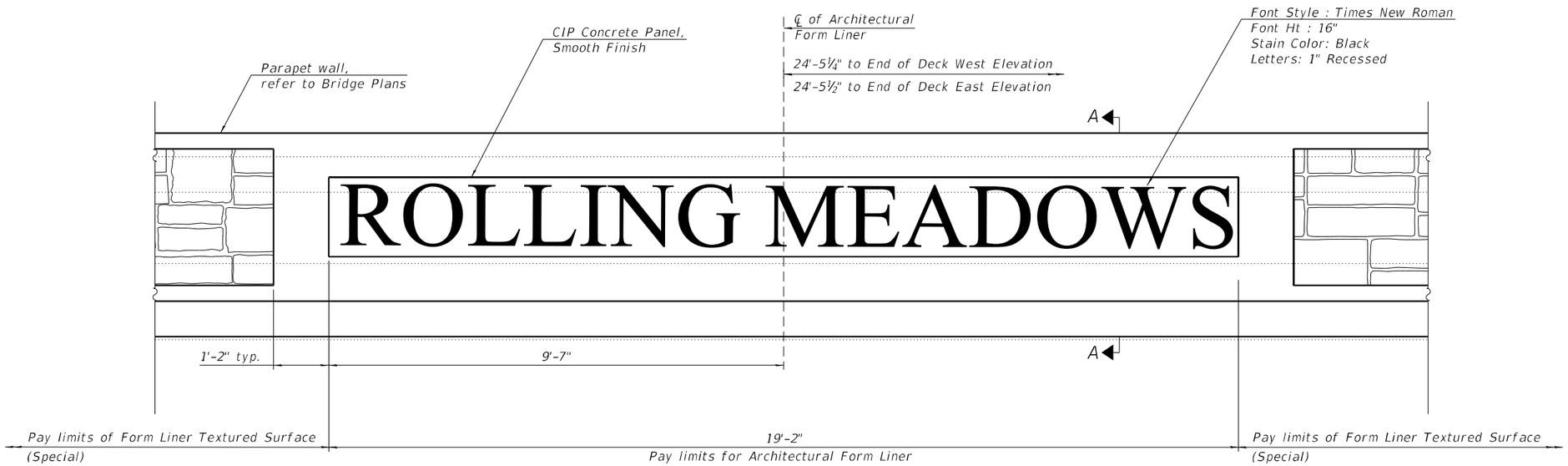

ARCHITECTURAL FORM LINER

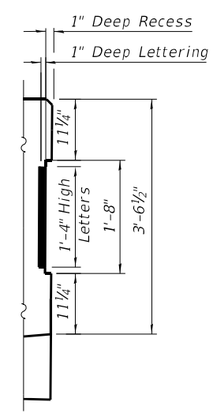

SECTION A-A

Notes:
1. For parapet dimensions not shown, see Bridge Plans.
2. Concrete Color Additive to be incorporated into Superstructure Concrete for all parapet locations receiving Form Liner Treatment.

MODEL: Default
FILE NAME: S:\OL\6300--6399\6346\113\Drawings\CAD\Micro-SS4\Exhibits\Aesthetic Exhibit_04_SN 016_0375 Industrial\0160375-0161120-C3-Bridge-Parapet02.dgn

STRAND ASSOCIATES
1170 SOUTH HOUBOLT ROAD
JOLIET, ILLINOIS 60431
(815) 744-4200
IDFPR NO. 184-001273

USER NAME = codyh	DESIGNED -	REVISED -	
	CHECKED -	REVISED -	
PLOT SCALE = 0:2.0000 ':" / in.	DRAWN - ZHH	REVISED -	
PLOT DATE = 9/20/2024	CHECKED - NDR	REVISED -	

STATE OF ILLINOIS
DEPARTMENT OF TRANSPORTATION

BRIDGE AESTHETIC PLAN (2 OF 2)
STRUCTURE NO. 016-0375 (NB) AND 016-1120 (SB)

F.A. RTE.	SECTION	COUNTY	TOTAL SHEETS	SHEET NO.
342	(531) BR 23	COOK	1211	813
		CONTRACT NO. 62W38		
	ILLINOIS	FED. AID PROJECT		

9/20/2024 2:16:02 PM

Benchmark: Cut 'X' on the SE corner of west leg of overhead sign 85.07' Lt. Sta. 301+57.85 Elev. 719.603

Existing Structure: SN 016-0200 built in 1964 as FA 61, Section 531-2.1. The culvert was extended 94'-0" toward the west in 1984. The structure is a single cell cast-in-place concrete culvert. The culvert carries three northbound lanes, three southbound lanes, one northbound entrance ramp lane, one southbound exit ramp lane of IL 53 and two lanes of E. Lake Drive over the Salt Creek Branch.

2-Year Flow Rate Through Structure: 118 CFS

INDEX OF SHEETS

GENERAL NOTES

1. Reinforcement bars designated (E) shall be epoxy coated.

2. Plan dimensions and details relative to the existing structure have been taken from existing plans are subject to nominal construction variations. The Contactor shall field verify existing dimensions and details affecting new construction and make necessary approved adjustments prior to construction or ordering of materials. Such variations shall not be cause for additional compensation for a change in scope of the work, however, the Contractor will be paid for the quantity actually furnished at the unit price bid for the work.

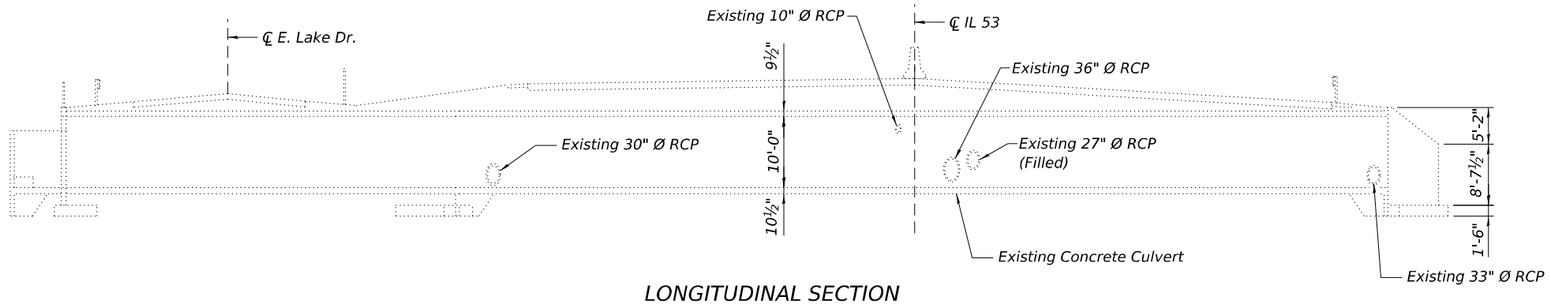

LONGITUDINAL SECTION

(Looking North)

TOTAL BILL OF MATERIAL

Item	Unit	Total
Concrete Removal	Cu. Yd.	6.4
Slope Wall Removal	Sq. Yd.	13.2
Reinforcement Bars, Epoxy Coated	Pound	680
Slope Wall 6 Inch	Sq. Yd.	13.2
Concrete Box Culverts	Cu. Yd.	6.2
Granular Backfill for Structures	Cu. Yd.	12
Geocomposite Wall Drain	Sq. Yd.	18
Pipe Underdrains for Structures 6"	Foot	15
Chain Link Fence to be Removed and Re-erected	Foot	18
Structural Repair of Concrete (Depth Equal to or less than 5 inches)	Sq. Ft.	142

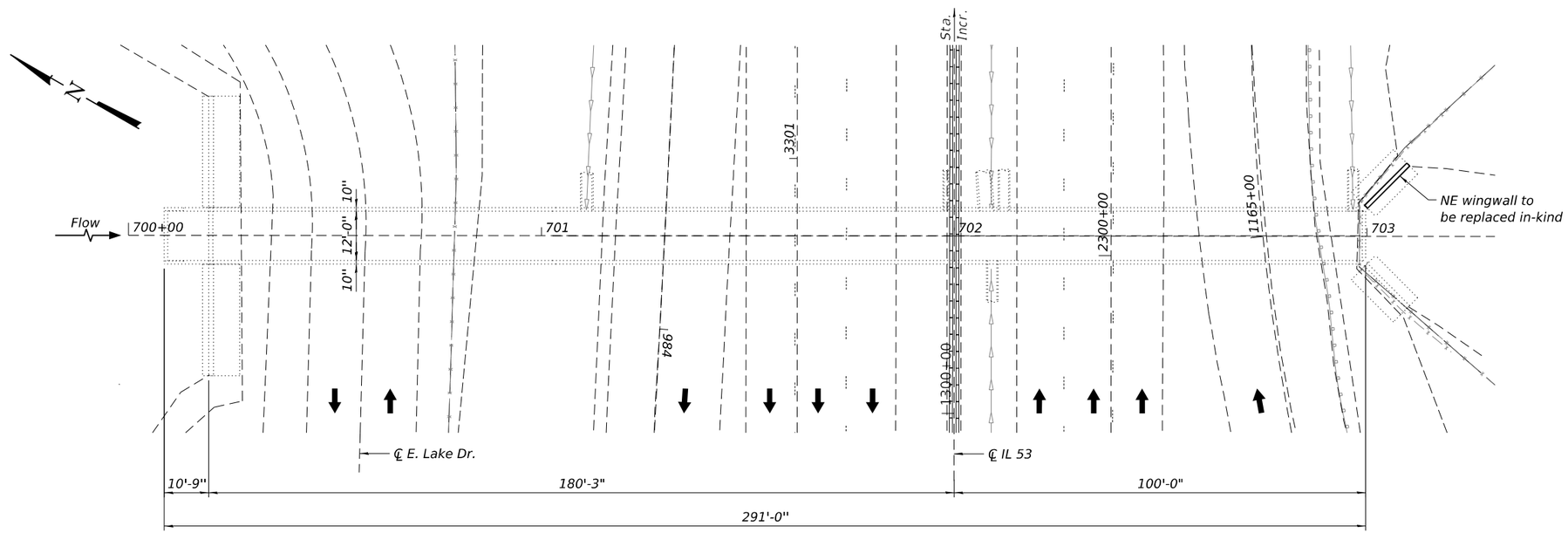

PLAN

SCOPE OF WORK

1. Perform repairs on inside face of culvert barrel.
2. Clean existing weepholes.
3. Remove and replace Northeast wingwall.

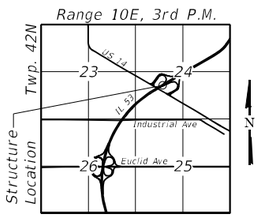

LOCATION SKETCH

DESIGN STRESSES

FIELD UNITS

f'c = 3,500 psi (Concrete)
fy = 60,000 psi (Reinforcement)

DESIGN SPECIFICATIONS

(New Construction)
2002 AASHTO "Standard Specification for Highway Bridges"

LOADING HS-20

(New Construction)
No future wearing surface

LICENSED STRUCTURAL ENGINEER
CHAOHUI LI
081-008769
SPRINGFIELD
STATE OF ILLINOIS

Chaohui Li 08/22/2024

Chaohui Li
Licensed Structural Engineer
State of Illinois No. 081-008769
Expires 11/30/2024

Date

GENERAL PLAN AND ELEVATION
IL 53 OVER TRIB. BRANCH OF SALT CREEK
F.A.P. ROUTE 342 SECTION 531-2.1
COOK COUNTY
STATION 1300+43.00
STRUCTURE NO. 016-0200

LIN ENGINEERING, LTD.
Consulting Engineers
Springfield, Illinois

USER NAME =	DESIGNED - CL	REVISED -	
	CHECKED - MTH	REVISED -	
PLOT SCALE =	DRAWN - AJF	REVISED -	
PLOT DATE = 9/11/2024	CHECKED - MTH	REVISED -	

STATE OF ILLINOIS
DEPARTMENT OF TRANSPORTATION

SHEET 1 OF 5 SHEETS

F.A.P. RTE.	SECTION	COUNTY	TOTAL SHEETS	SHEET NO.
342	531-2.1	COOK	1211	814

CONTRACT NO. 62W38

ILLINOIS FED. AID PROJECT

MODEL: Default
FILE NAME: E:\2212\Struct\SN 016-0200 Culvert Repair\CADD\CADD_Sheets\0160200-62W38-001-GPE.dgn
9/11/2024 2:26:26 PM

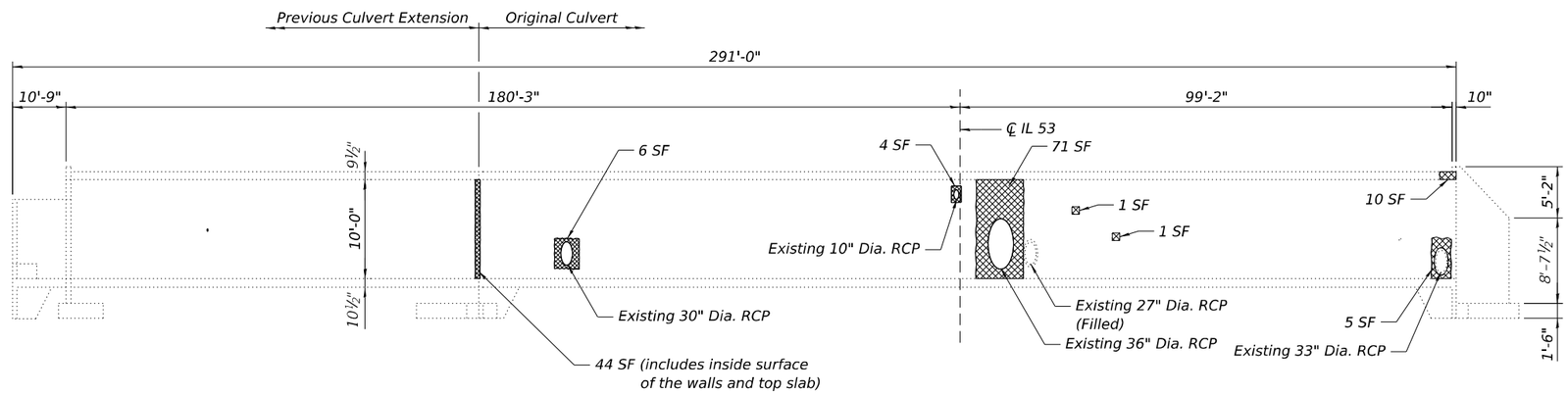

NORTH WALL

(Inside Elevation)
(Looking North)

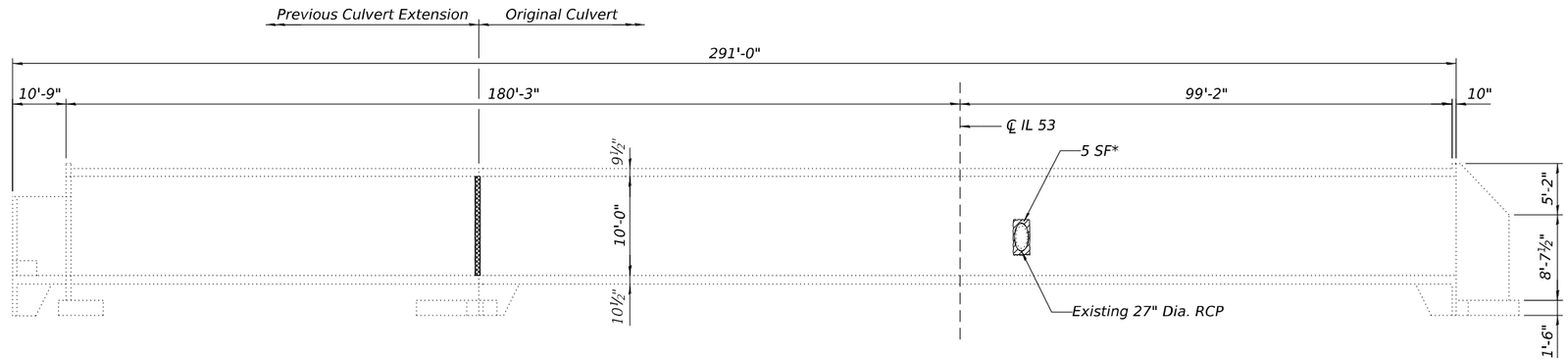

* Remove existing brick and fill with concrete.
Cost included with Concrete Box Culverts.

SOUTH WALL

(Inside Elevation)
(Looking North; Reflected View)

LEGEND

Structural Repair of Concrete
(Depth equal to or less than 5 in.)

SF = Square Feet

Concrete Box Culverts

BILL OF MATERIAL

Item	Unit	Total
Structural Repair of Concrete (Depth equal to or less than 5 in.)	Sq. Ft.	142
Concrete Box Culverts	Cu. Yd.	0.2

MODEL: Default
FILE NAME: E:\2212\Struct\SN 016-0200 Culvert Repair\CADD\CADD_Sheets\0160200-62W38-002-RepairDetails.dgn

LIN ENGINEERING, LTD.
Consulting Engineers
Springfield, Illinois

USER NAME =	DESIGNED - CL	REVISED -	
	CHECKED - MTH	REVISED -	
PLOT SCALE =	DRAWN - AJF	REVISED -	
PLOT DATE = 9/13/2024	CHECKED - MTH	REVISED -	

STATE OF ILLINOIS
DEPARTMENT OF TRANSPORTATION

REPAIR DETAILS
STRUCTURE NO. 016-0200

SHEET 2 OF 5 SHEETS

F.A.P. RTE.	SECTION	COUNTY	TOTAL SHEETS	SHEET NO.
342	(531) BR 23	COOK	1211	815
		CONTRACT NO. 62W38		
	ILLINOIS	FED. AID PROJECT		

9/13/2024 8:35:36 AM

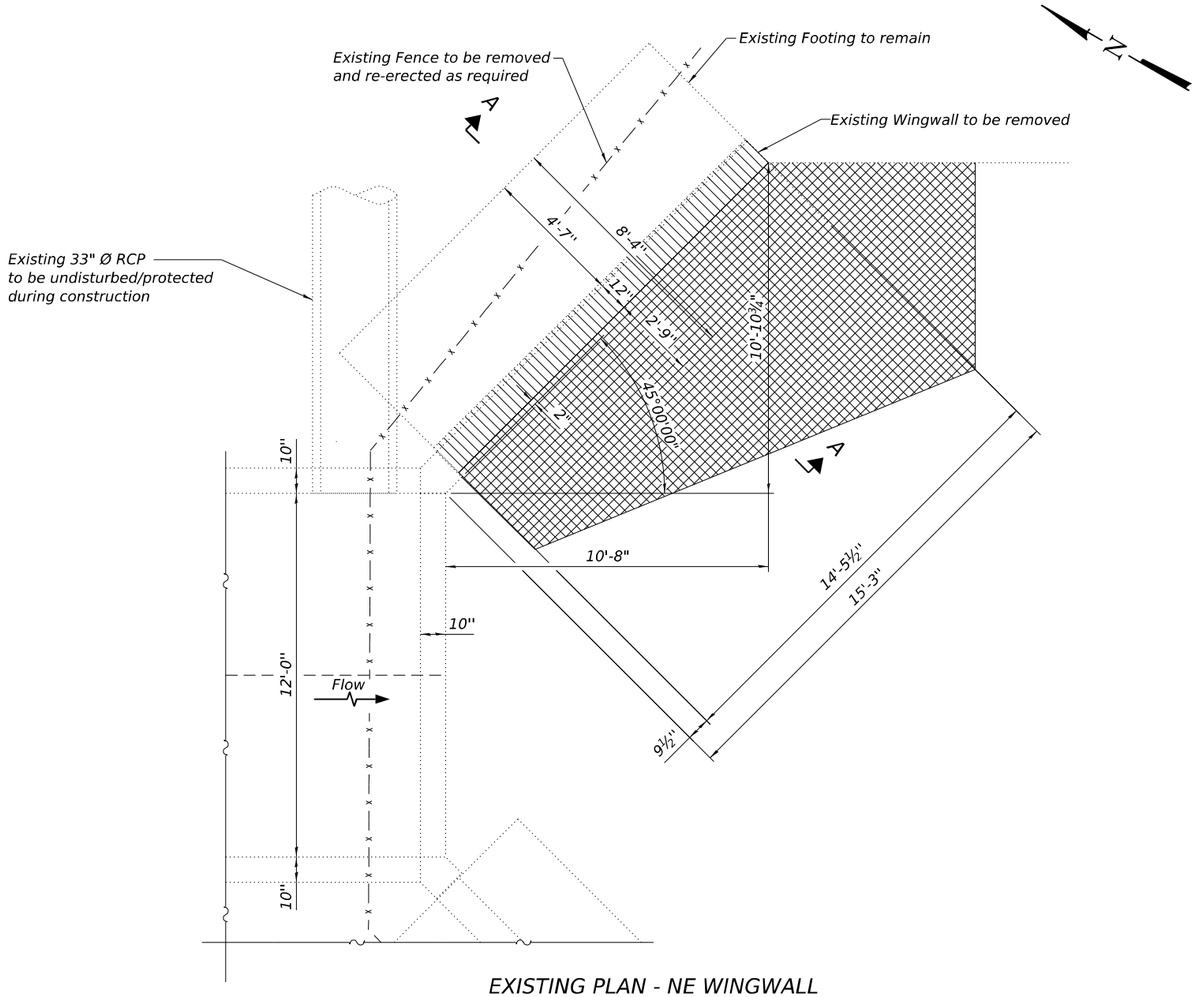

EXISTING PLAN - NE WINGWALL

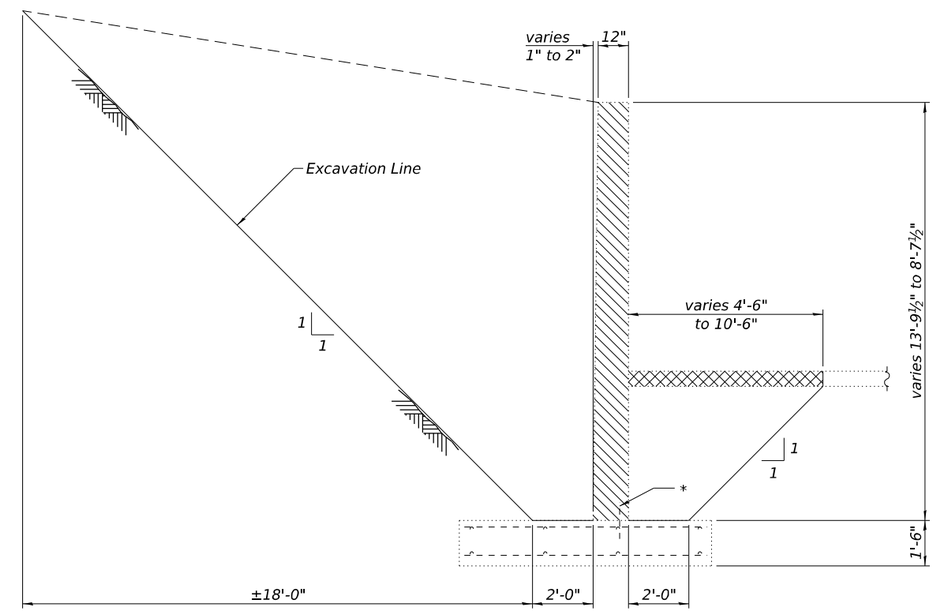

SECTION A-A

* Existing reinforcement shall be cleaned, straightened and incorporated into the new construction. Cost included with Concrete Removal.

LEGEND

Remove existing wingwall

Remove portion of existing channel wall. Cost included with Slope Wall Removal

BILL OF MATERIAL

Item	Unit	Total
Slope Wall Removal	Sq. Yd.	13.2
Concrete Removal	Cu. Yd.	6.4
Chain Link Fence to be Removed and Re-erected	Foot	18

MODEL: Default
FILE NAME: E:\2212\Struct\SN 016-0200 Culvert Repair\CADD\CADD_Streets\016020062W38-003-RemovalDetails.dgn

LIN ENGINEERING, LTD.
Consulting Engineers
Springfield, Illinois

USER NAME =	DESIGNED - CL	REVISED -	
	CHECKED - MTH	REVISED -	
PLOT SCALE =	DRAWN - AJF	REVISED -	
PLOT DATE = 9/13/2024	CHECKED - MTH	REVISED -	

STATE OF ILLINOIS
DEPARTMENT OF TRANSPORTATION

WINGWALL REMOVAL DETAILS
STRUCTURE NO. 016-0200

SHEET 3 OF 5 SHEETS

F.A.P. RTE.	SECTION	COUNTY	TOTAL SHEETS	SHEET NO.
342	(531) BR 23	COOK	1211	816
		CONTRACT NO. 62W38		
	ILLINOIS	FED. AID PROJECT		

9/13/2024 8:36:06 AM

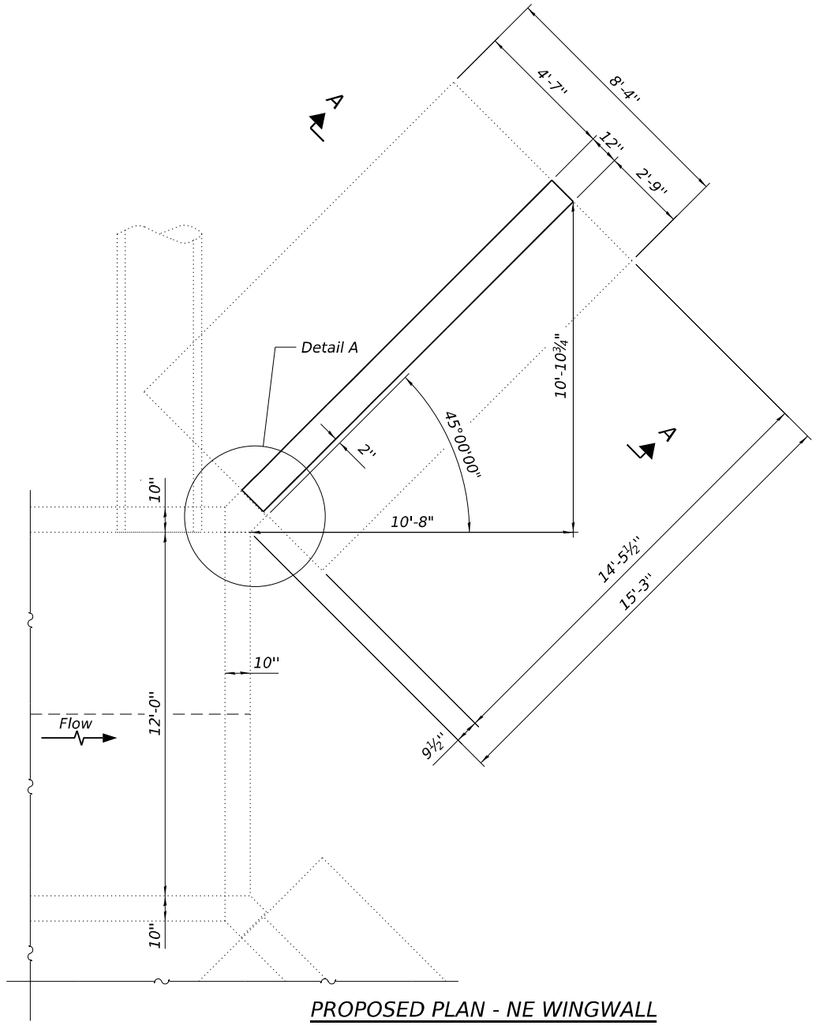

PROPOSED PLAN - NE WINGWALL

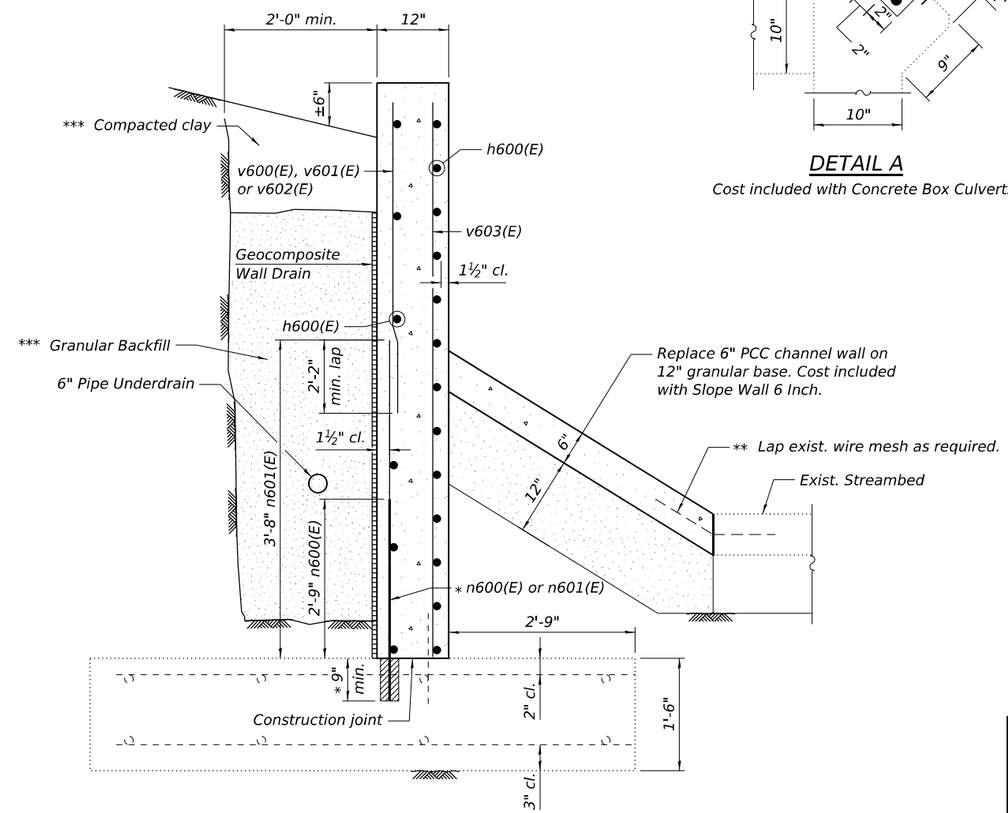

SECTION A-A

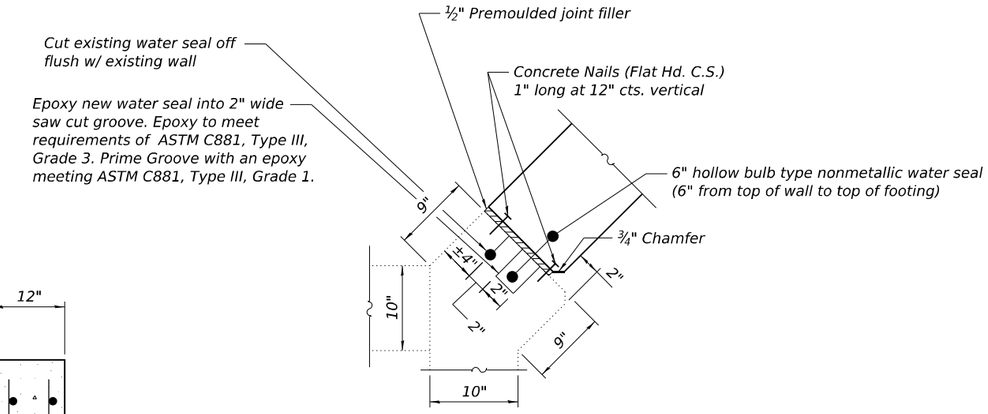

DETAIL A

Cost included with Concrete Box Culverts

* Drill and epoxy grout 9" min. into existing concrete according to Article 584 of the Standard Specifications. Cost included with Reinforcement Bars, Epoxy Coated.

** Slope Wall shall be reinforced with welded wire fabric, 6" x 6" - W4.0 x W4.0, weighing 58 lbs per 100 sq. ft.

*** Cost included with Granular Backfill for Structures.

BILL OF MATERIAL

Bar	No.	Size	Length	Shape
h600(E)	20	#4	14'-2"	———
n600(E)	17	#6	3'-6"	———
n601(E)	18	#7	4'-5"	———
v600(E)	6	#5	12'-0"	———
v601(E)	6	#5	10'-3"	———
v602(E)	6	#5	8'-6"	———
v603(E)	5	#4	13'-6"	———
Reinforcement Bars, Epoxy Coated			Pound	680
Concrete Box Culverts			Cu. Yd.	6.0
Slope Wall 6 Inch			Sq. Yd.	13.2
Geocomposite Wall Drain			Sq. Yd.	18
Granular Backfill for Structures			Cu. Yd.	12
Pipe Underdrains for Structures 6"			Foot	15

(Sheet 1 of 2)

MODEL: Default
FILE NAME: E:\221ZStructSN 016-0200 Culvert Repair\CADD\CADD_Streets\0160200-62W38-004-WingwallReplacementDetail1.dgn

LIN ENGINEERING, LTD.
Consulting Engineers
Springfield, Illinois

USER NAME =	DESIGNED - CL	REVISED -	
	CHECKED - MTH	REVISED -	
PLOT SCALE =	DRAWN - AJF	REVISED -	
PLOT DATE = 9/13/2024	CHECKED - MTH	REVISED -	

STATE OF ILLINOIS
DEPARTMENT OF TRANSPORTATION

WINGWALL REPLACEMENT DETAILS
STRUCTURE NO. 016-0200

SHEET 4 OF 5 SHEETS

F.A.P. RTE.	SECTION	COUNTY	TOTAL SHEETS	SHEET NO.
342	(531) BR 23	COOK	1211	817
		CONTRACT NO. 62W38		
	ILLINOIS	FED. AID PROJECT		

9/13/2024 8:36:33 AM

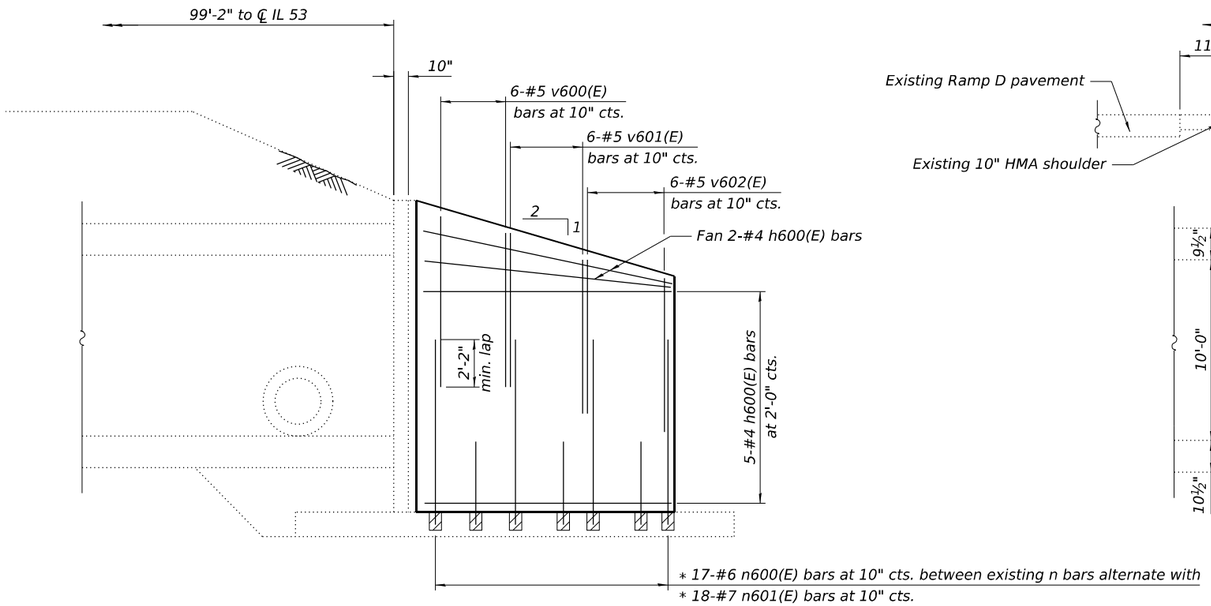

ELEVATION
(Showing reinf. back face)

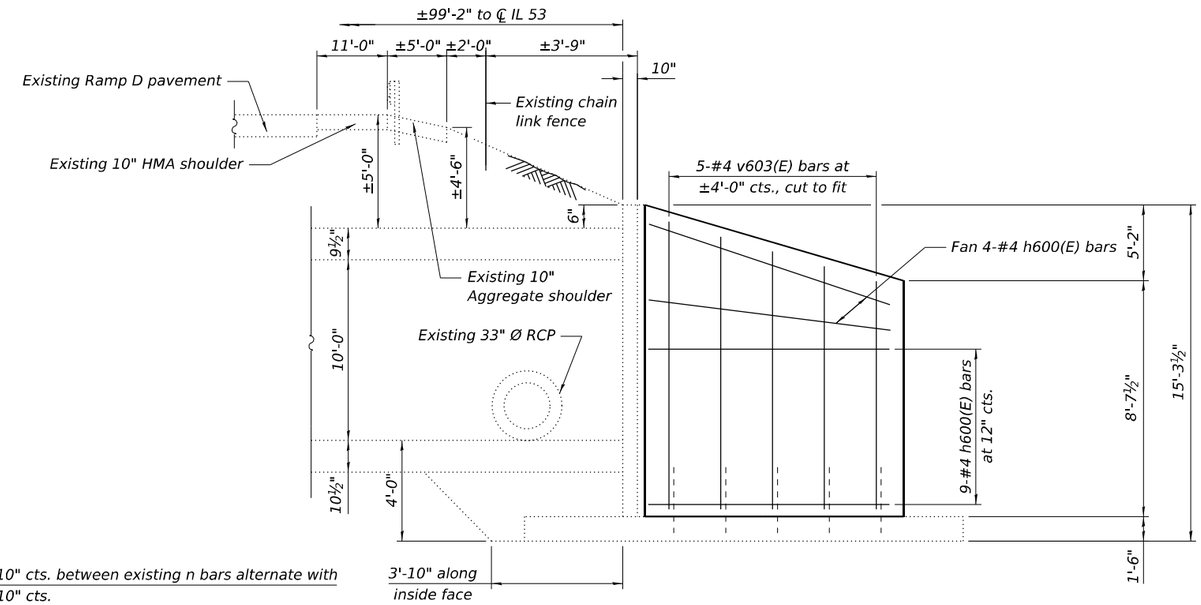

ELEVATION
(Showing reinf. front face)

* Drill and epoxy grout 9" minimum into existing concrete according to Article 584 of the Standard Specification. Cost included with Reinforcement Bars, Epoxy Coated.

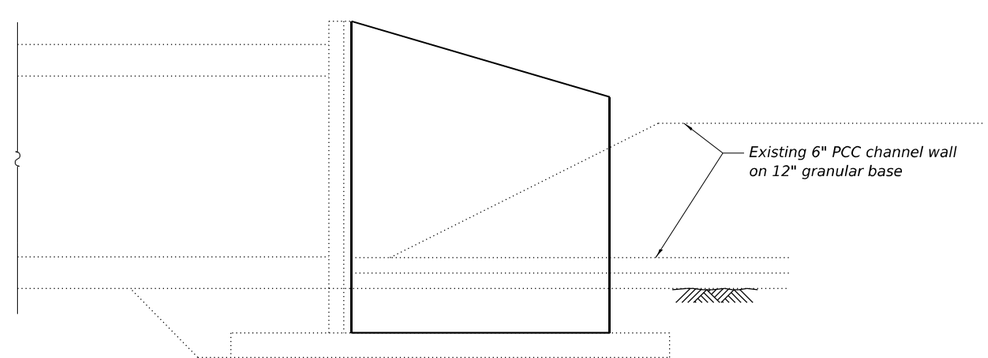

PCC CHANNEL WALL

(Sheet 2 of 2)

LIN ENGINEERING, LTD. Consulting Engineers Springfield, Illinois	USER NAME =	DESIGNED - CL	REVISED -	STATE OF ILLINOIS DEPARTMENT OF TRANSPORTATION	WINGWALL REPLACEMENT DETAILS STRUCTURE NO. 016-0200	F.A.P. RTE.	SECTION	COUNTY	TOTAL SHEETS / SHEET NO.
		CHECKED - MTH	REVISED -			342	(531) BR 23	COOK	1211 / 818
	PLOT SCALE =	DRAWN - AJF	REVISED -					CONTRACT NO. 62W38	
	PLOT DATE = 9/13/2024	CHECKED - MTH	REVISED -		SHEET 5 OF 5 SHEETS		ILLINOIS	FED. AID PROJECT	

MODEL: Default
FILE NAME: E:\2212\Struct\SN 016-0200 Culvert Repair\CADD\CADD_Sheets\0160200-62W38-005-WingwallReplacementDetail2.dgn
9/13/2024 8:37:03 AM

Benchmark: BM 17 - Cut cross on the southwest corner of concrete foundation. Sta. 1345+43.01, 83.81' Right, Elev. 751.399.

Existing Structures: Structure Numbers 016-0373 (NB) and 016-0970 (SB) were originally built in 1964 as FA Route 61 under Section 531-3HB. In 1971, the deck was patched and a bituminous overlay was applied. In 1991, the joints and parapets were reconstructed, along with deck patching and overlay replacement. In 2000, the abutment bearings were replaced. In 2010, the joints were replaced and repairs were made to the deck and parapets. The existing structures consist of four span continuous non-composite steel beam superstructures supported on multi-column piers and stub abutments. Welded cover plates are present on the beams. Along the local tangent, the bridge measures 205'-0" back to back abutments with a 13°24'15" right forward skew. Measured radially, the out to out deck width varies 69'-3¾" to 72'-11⅞" (SB) and 70'-0¼" to 75'-0⅜" (NB).

Traffic Control: Traffic is to be maintained utilizing staged construction.

No Salvage.

Notes:
1. Up to ¼" to be ground off the bridge deck and the bridge approach slabs.
2. All structural steel shall be galvanized.
3. All transverse dimensions are radial and all longitudinal dimensions are measured along the local tangent, unless noted otherwise.
4. Existing Name Plates shall be cleaned and relocated next to the new Name Plates. Cost included with Name Plates.

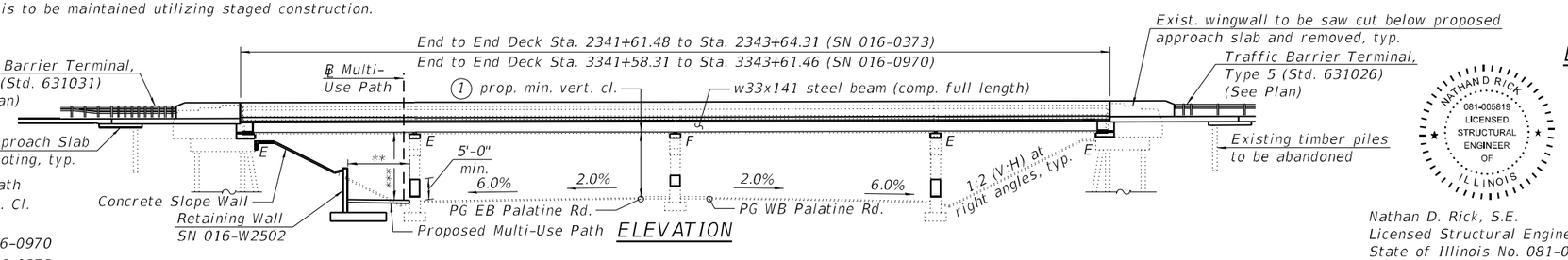

ELEVATION

** 14'-0" Multi-Use path
*** 14'-10⅝" Min. Vert. Cl.

(1) 15'-0⅞" for SN 016-0970
15'-8⅞" for SN 016-0373

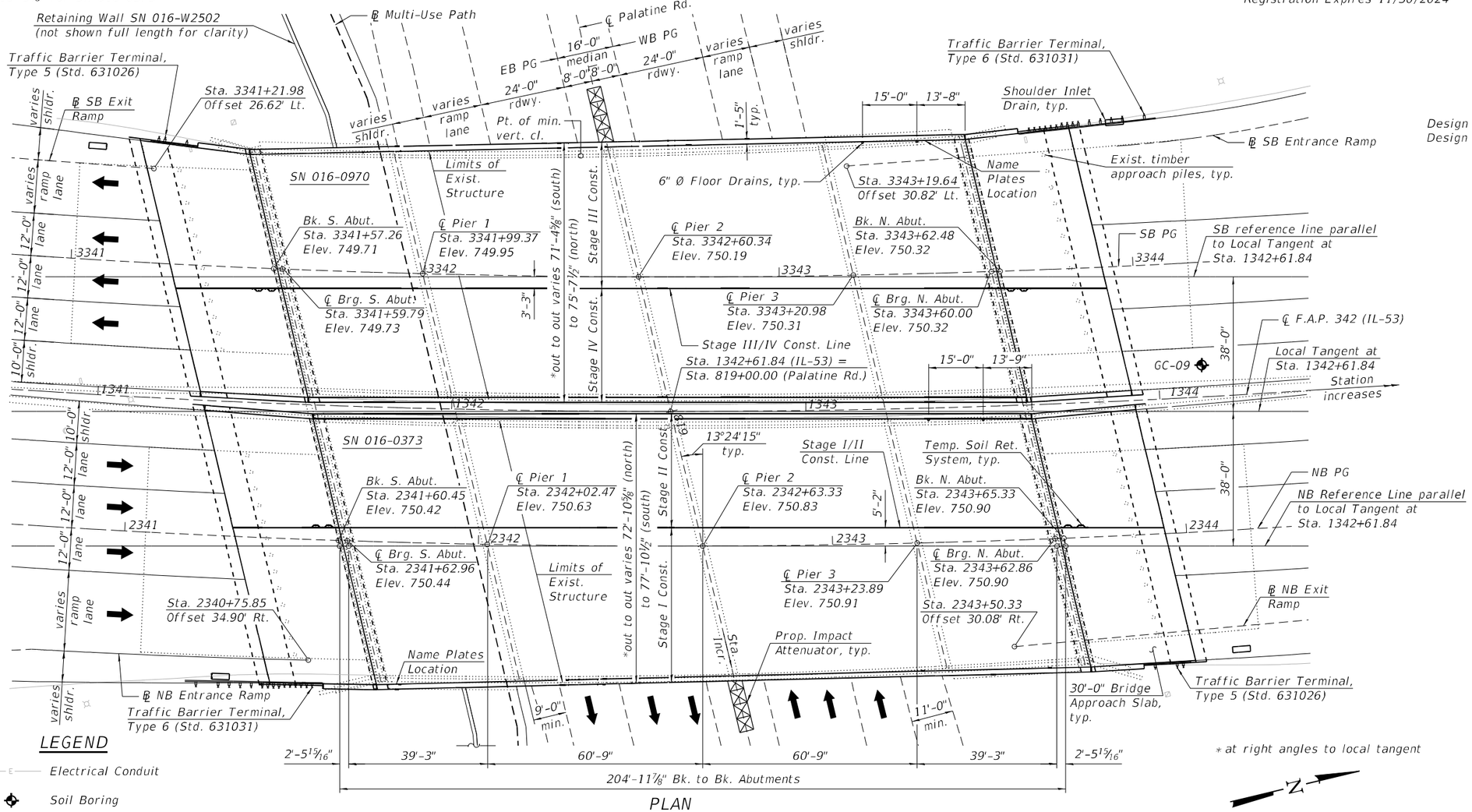

PLAN

LEGEND

Electrical Conduit

Soil Boring

STA. 1342+61.84
RE-BUILT 202X BY
STATE OF ILLINOIS
F.A.P. Rt. 342 (IL-53)
Sec. (531) BR 23
LOADING H-93
STR. NO. 016-0373

STA. 1342+61.84
RE-BUILT 202X BY
STATE OF ILLINOIS
F.A.P. Rt. 342 (IL-53)
Sec. (531) BR 23
LOADING H-93
STR. NO. 016-0970

NAME PLATE
(See Std. 515001 and Note 4)

EXISTING CONSTRUCTION LOADING HS20-44
NEW CONSTRUCTION LOADING HL-93
Allow 25#/sq. ft. for future wearing surface.

NATHAN D. RICK 081-005819 LICENSED STRUCTURAL ENGINEER OF ILLINOIS

Nathan D. Rick, S.E.
Licensed Structural Engineer
State of Illinois No. 081-007039
Registration Expires 11/30/2024

DESIGN SPECIFICATIONS
(New Construction)
2020 AASHTO LRFD Bridge Design Specifications, 9th Edition

(Existing Construction)
2002 AASHTO Standard Specifications for Highway Bridges, 17th Edition

2006 Seismic Retrofitting Manual for Highway Structures: Part 1 - Bridges (FHWA-HRT-06-032)

SEISMIC DATA
Seismic Retrofit Category (SRC) = A
Design Spectral Acceleration at 1.0 sec. (SD1) = 0.082g
Design Spectral Acceleration at 0.2 sec. (SDS) = 0.141g
Soil Site Class = D
Performance Level = PL 1

DESIGN STRESSES
FIELD UNITS (NEW CONSTRUCTION)
f'c = 4,000 psi (Superstructure)
f'c = 3,500 psi (Substructure)
fy = 60,000 psi (Reinforcement)
fy = 50,000 psi (M270 Grade 50)
fy = 36,000 psi (M270 Grade 36)
FIELD UNITS (EXISTING CONSTRUCTION)
fc = 1,400 psi (Substructure)
fs = 20,000 psi (Reinforcement)

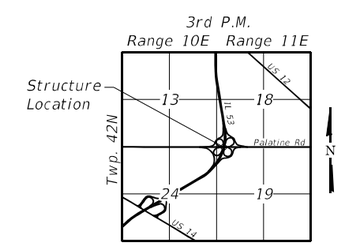

LOCATION SKETCH

GENERAL PLAN AND ELEVATION
IL RTE. 53 OVER PALATINE ROAD
FAP RTE. 342 - SEC. (531) BR 23
COOK COUNTY
STATION 1342+61.84
STRUCTURE NO. 016-0373 (NB)
STRUCTURE NO. 016-0970 (SB)

STRAND ASSOCIATES 1170 SOUTH HOUBOLT ROAD JOLIET, ILLINOIS 60431 (815) 744-4200 IDFPR NO. 184-001273	USER NAME = codyh	DESIGNED - TJE	REVISED -
		CHECKED - NDR	REVISED -
	PLOT SCALE = 0:2.0000 ':" / in.	DRAWN - CJH	REVISED -
	PLOT DATE = 9/25/2024	CHECKED - TJE	REVISED -

STATE OF ILLINOIS
DEPARTMENT OF TRANSPORTATION

GENERAL PLAN AND ELEVATION
STRUCTURE NO. 016-0373 (NB) AND 016-0970 (SB)
SHEET 1 OF 73 SHEETS

F.A. RTE.	SECTION	COUNTY	TOTAL SHEETS	SHEET NO.
342	(531) BR 23	COOK	1211	819
		CONTRACT NO. 62W38		
		ILLINOIS	FED. AID PROJECT	

MODEL: Default
FILE NAME: S:\IOL\6300-6399\6346\113\Drawings\CAD\Micros-SS4\CAD_Sheets\0160373097D-62W38-001-GPE.dgn
9/25/2024 7:53:31 AM

GENERAL NOTES

1. Fasteners shall be ASTM F 3125 Grade A325 Type 1, Fasteners shall be hot dip galvanized. See Special Provisions for "Hot Dip Galvanizing for Structural Steel." Bolts 7/8" diameter, holes 15/16" diameter, unless otherwise noted.

2. Calculated weight of Structural Steel = 583,760 lbs (Grade 50)
   = 73,260 lbs (Grade 36)

3. All structural steel shall be AASHTO M270 Grade 50 or Grade 36 and shall be galvanized. See Special Provision for "Hot Dip Galvanizing of Structural Steel."

4. No field welding is permitted except as specified in the contract documents.

5. Reinforcement bars designated (E) shall be epoxy coated.

6. If the Contractor elects to use cantilever forming brackets on the exterior beams or girders, the brackets shall be placed at the same locations as required for the hardwood blocks in Article 503.06(b) of the Standard Specifications. If additional cantilever forming brackets are required, hardwood blocking shall be wedged between the exterior and first interior beam at each of these additional bracket locations.

7. Bearing seat surfaces shall be constructed or adjusted to the designated elevations within a tolerance of 1/8" (0.01 ft.). Adjustment shall be made either by grinding the surface or by shimming the bearings.

8. Plan dimensions and details relative to the existing structure have been taken from existing plans are subject to nominal construction variations. The Contactor shall field verify existing dimensions and details affecting new construction and make necessary approved adjustments prior to construction or ordering of materials. Such variations shall not be cause for additional compensation for a change in scope of the work, however, the Contractor will be paid for the quantity actually furnished at the unit price bid for the work.

9. The existing structural steel coating contains lead. The Contractor shall take appropriate precautions to address the presence of lead on this project.

10. An existing debris shield is present full length of Span 2 and 3. The staged removal of this debris shield is to be performed concurrently with the staged removal of the substructures. This work will not be individually measured for payment but is considered to be included with the cost of "Removal of Existing Superstructure NO. 1 and No. 2."

INDEX OF SHEETS

TOTAL BILL OF MATERIAL

Item	Unit	Super	Sub	Total
Removal of Existing Superstructure No. 3	EACH	1		1
Removal of Existing Superstructure No. 4	EACH	1		1
Concrete Removal	CU YD		344	344
Protective Shield	SQ YD	3,273		3,273
Structure Excavation	CU YD		824	824
Concrete Structures	CU YD	138	401	538
Concrete Superstructure	CU YD	1,066		1,066
Protective Coat	SQ YD	4,677		4,677
Concrete Superstructure (Approach Slab)	CU YD	420		420
Furnishing and Erecting Structural Steel	L SUM	1		1
Stud Shear Connectors	EACH	24,000		24,000
Reinforcement Bars, Epoxy Coated	POUND	438,480	106,620	545,100
Bar Splicers	EACH	2,038		2,038
Mechanical Splicers	EACH	44	186	230
Slope Wall 4 Inch	SQ YD		354	354
Name Plates	EACH	2		2
Elastomeric Bearing Assembly, Type I	EACH	80		80
Anchor Bolts, 1"	EACH	128		128
Anchor Bolts, 1 1/4"	EACH	80		80
Temporary Soil Retention System	SQ FT		471	471
Granular Backfill for Structures	CU YD		546	546
Concrete Sealer	SQ FT		5,696	5,696
Geocomposite Wall Drain	SQ YD		379	379
Pipe Underdrains for Structures 4"	FOOT		353	353
Slope Wall Crack Sealing	FOOT		346	346
Bridge Deck Grooving (Longitudinal)	SQ YD	4,067		4,067
Bar Terminators	EACH	1,109		1,109
Structural Repair of Concrete (Depth Equal to or Less Than 5 Inches)	SQ FT		17	17
Structural Repair of Concrete (Depth Greater Than 5 Inches)	SQ FT		3	3
Diamond Grinding (Bridge Section)	SQ YD	4,131		4,131
Slope Wall Repair	SQ YD		19	19
Temporary Shoring	EACH		6	6

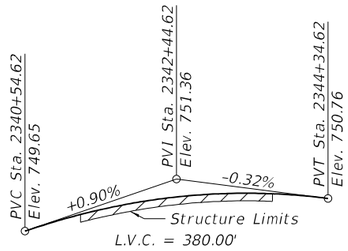

NB IL-53 PROFILE GRADE

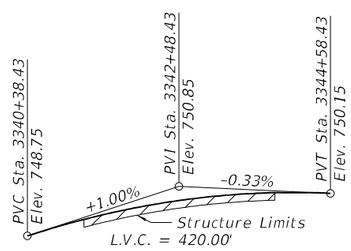

SB IL-53 PROFILE GRADE

Note:
The IL 53 Profile Grades show the final grade after grinding.

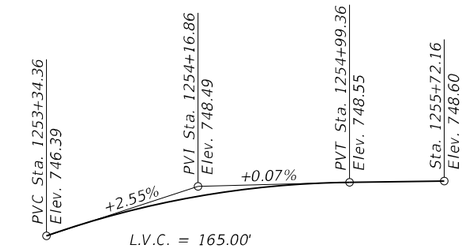

NORTHWEST LOOP RAMP PROFILE GRADE
(Elevations taken along ℄ of Ramp)

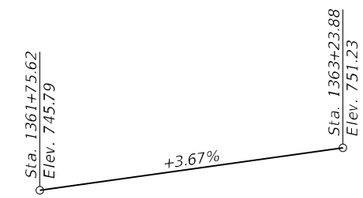

SOUTHEAST LOOP RAMP PROFILE GRADE
(Elevations taken along ℄ of Ramp)

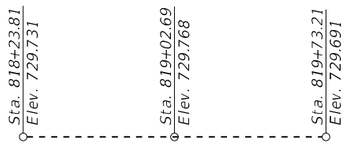

EB PALATINE RD. PROFILE GRADE

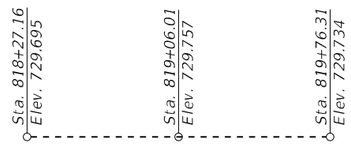

WB PALATINE RD. PROFILE GRADE

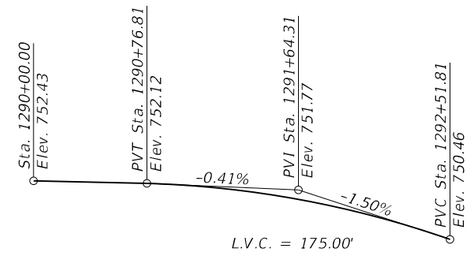

NORTHEAST LOOP RAMP PROFILE GRADE
(Elevations taken along ℄ of Ramp)

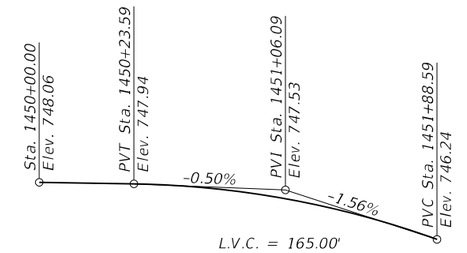

SOUTHWEST LOOP RAMP PROFILE GRADE
(Elevations taken along ℄ of Ramp)

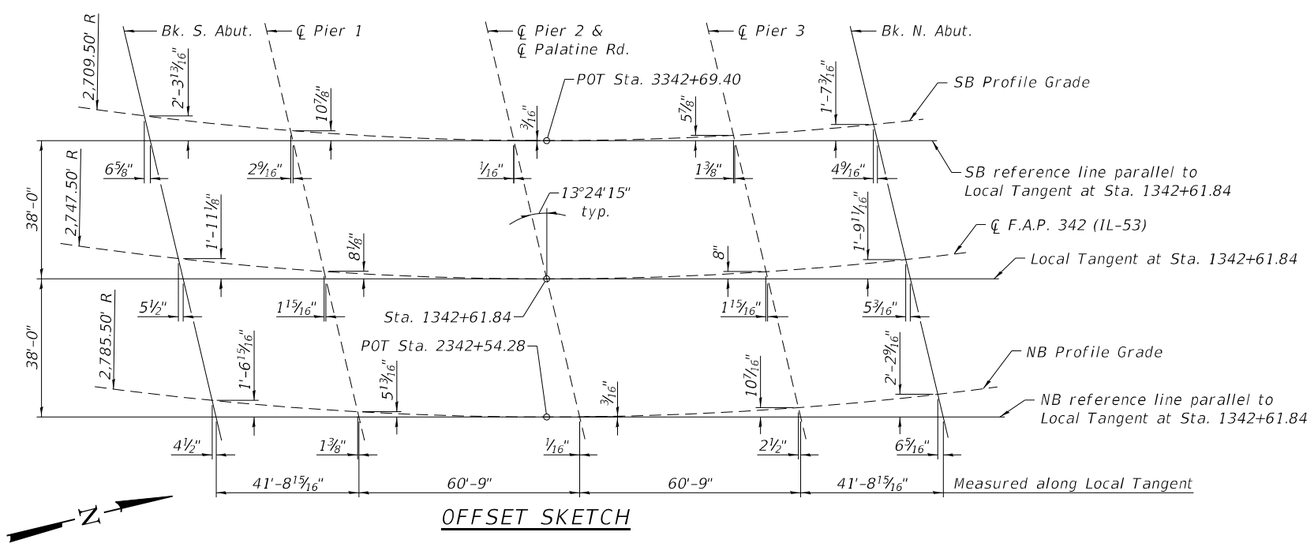

OFFSET SKETCH

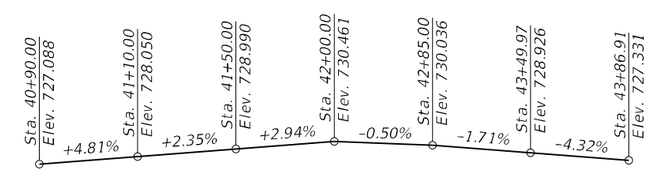

MULTI-USE PATH PROFILE GRADE
(Elevations taken along ℄ of Multi-Use Path)

CURVE DATA

IL-53 SB PGL
Curve 5
P.I. Sta. = 3339+62.08
Δ = 69° 35' 13" (Lt)
D = 2° 06' 53"
R = 2,709.50'
T = 1,882.69'
L = 3,290.75'
E = 589.88'
P.C. Sta. = 3320+79.38
P.T. Sta. = 3353+70.13
SE = 5.0%

Centerline IL-53
Curve 5
P.I. Sta. = 1339+50.21
Δ = 69° 35' 13" (Lt)
D = 2° 05' 07"
R = 2,747.50'
T = 1,909.10'
L = 3,336.90'
E = 598.16'
P.C. Sta. = 1320+41.11
P.T. Sta. = 1353+78.01
SE = 5.0%

IL-53 NB PGL
Curve 5
P.I. Sta. = 2339+38.34
Δ = 69° 35' 13" (Lt)
D = 2° 03' 25"
R = 2,785.50'
T = 1,935.50'
L = 3,383.05'
E = 606.43'
P.C. Sta. = 2320+02.83
P.T. Sta. = 2353+85.88
SE = 5.0%

SE Ramp
Ramp Curve 74
P.I. Sta. = 1361+53.38
Δ = 55° 58' 11" (Rt)
D = 26° 13 '25"
R = 218.49'
T = 116.10'
L = 213.43'
E = 28.93'
P.C. Sta. = 1360+37.28
P.T. Sta. = 1362+50.71

SW Ramp
Ramp Curve 79
P.I. Sta. = 1451+34.83
Δ = 8° 26' 48" (Rt)
D = 6° 46' 35"
R = 845.53'
T = 62.44'
L = 124.65'
E = 2.30'
P.C. Sta. = 1450+72.39
P.T. Sta. = 1451+97.05

NW Ramp
Ramp Curve 92
P.I. Sta. = 1254+61.74
Δ = 21° 11' 15" (Rt)
D = 15° 21' 45"
R = 372.96'
T = 69.76'
L = 137.92'
E = 6.47'
P.C. Sta. = 1253+91.98
P.T. Sta. = 1255+29.90

NE Ramp
Ramp Curve 98
P.I. Sta. = 1292+13.30
Δ = 12° 51' 00" (Rt)
D = 8° 20' 28"
R = 686.91'
T = 77.35'
L = 154.06'
E = 4.34'
P.C. Sta. = 1291+35.95
P.T. Sta. = 1292+90.01

STRAND ASSOCIATES
1170 SOUTH HOUBOLT ROAD
JOLIET, ILLINOIS 60431
(815) 744-4200
IDFPR NO. 184-001273

USER NAME = codyh	DESIGNED - TJE	REVISED -	
	CHECKED - NDR	REVISED -	
PLOT SCALE = 0:2.0000 ':" / in.	DRAWN - CJH	REVISED -	
PLOT DATE = 9/25/2024	CHECKED - TJE	REVISED -	

STATE OF ILLINOIS
DEPARTMENT OF TRANSPORTATION

ROADWAY PROFILES
STRUCTURE NO. 016-0373 (NB) AND 016-0970 (SB)

SHEET 3 OF 73 SHEETS

F.A. RTE.	SECTION	COUNTY	TOTAL SHEETS	SHEET NO.
342	(531) BR 23	COOK	1211	821
		CONTRACT NO. 62W38		
		ILLINOIS	FED. AID PROJECT	

MODEL: Default
FILE NAME: S:\IDL\6300-639916346\113\Drawings\CAD\Micros-SSA\CAD_Sheets\0160373097D-62W38-003-RP.dgn
9/25/2024 7:53:34 AM

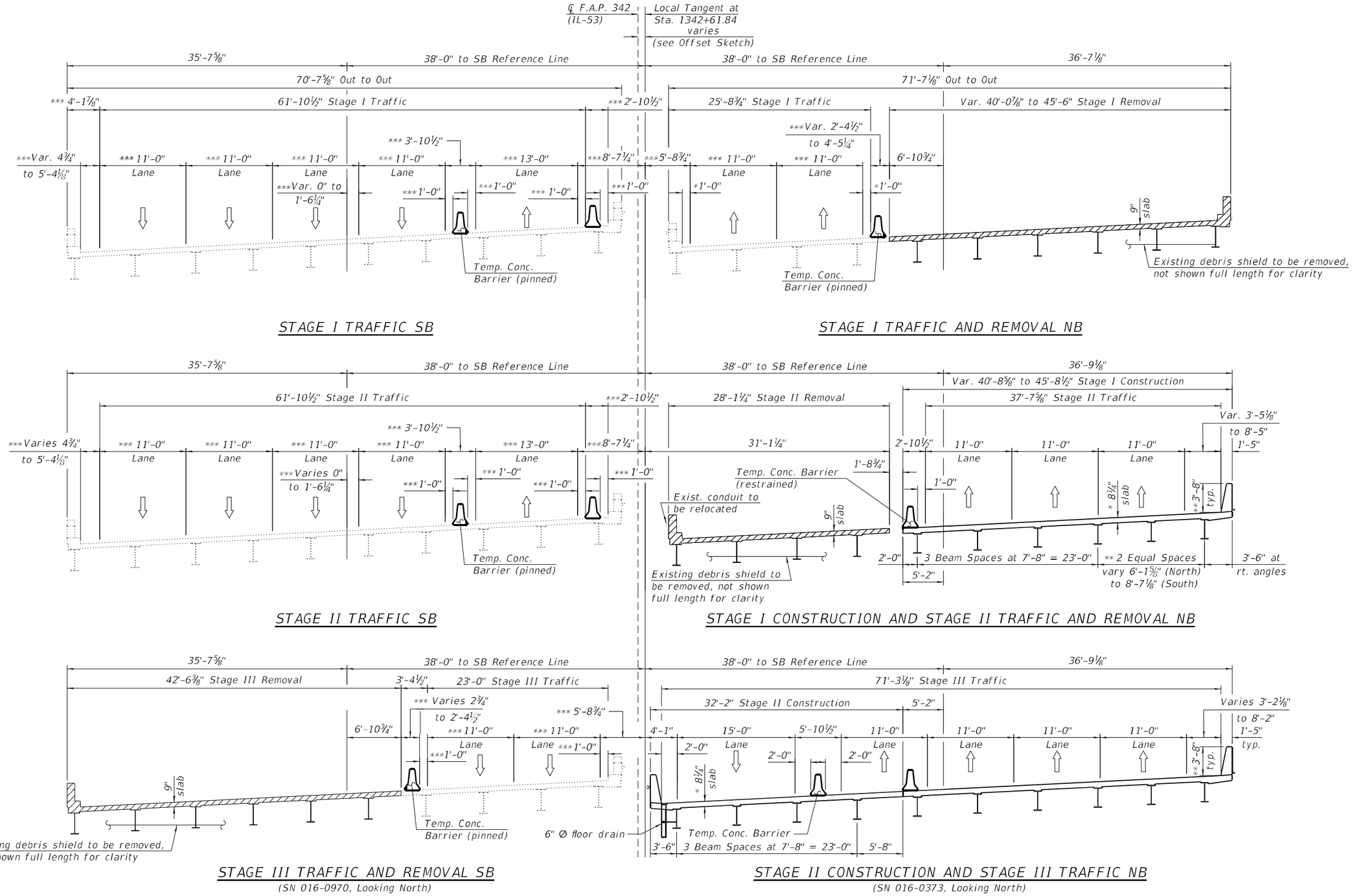

* Prior to Grinding
** After Grinding
*** Measured radially from Point of Tangency

Notes:
1. All dimensions measured perpendicular to reference lines unless otherwise noted.
2. Existing under bridge lighting to be removed and relocated.
3. See Offset Sketch on Sheet 3 of 73 for offsets between tangent lines and ℄ or PGs.

MODEL: Default
FILE NAME: S:\OL6300-6399\6346\113\Drawings\CAD\Micro-SSA\CAD_Sheets\0160373097D-62W38-004-CS.dgn
9/25/2024 7:53:35 AM

STRAND ASSOCIATES®
1170 SOUTH HOUBOLT ROAD
JOLIET, ILLINOIS 60431
(815) 744-4200
IDFPR NO. 184-001273

USER NAME = codyh	DESIGNED - TJE	REVISED -	
	CHECKED - NDR	REVISED -	
PLOT SCALE = 0:2.0000 ':" / in.	DRAWN - CJH	REVISED -	
PLOT DATE = 9/25/2024	CHECKED - TJE	REVISED -	

STATE OF ILLINOIS
DEPARTMENT OF TRANSPORTATION

CONSTRUCTION STAGING (1 OF 2)
STRUCTURE NO. 016-0373 (NB) AND 016-0970 (SB)

SHEET 4 OF 73 SHEETS

F.A. RTE.	SECTION	COUNTY	TOTAL SHEETS	SHEET NO.
342	(531) BR 23	COOK	1211	822
		CONTRACT NO. 62W38		
		ILLINOIS	FED. AID PROJECT	

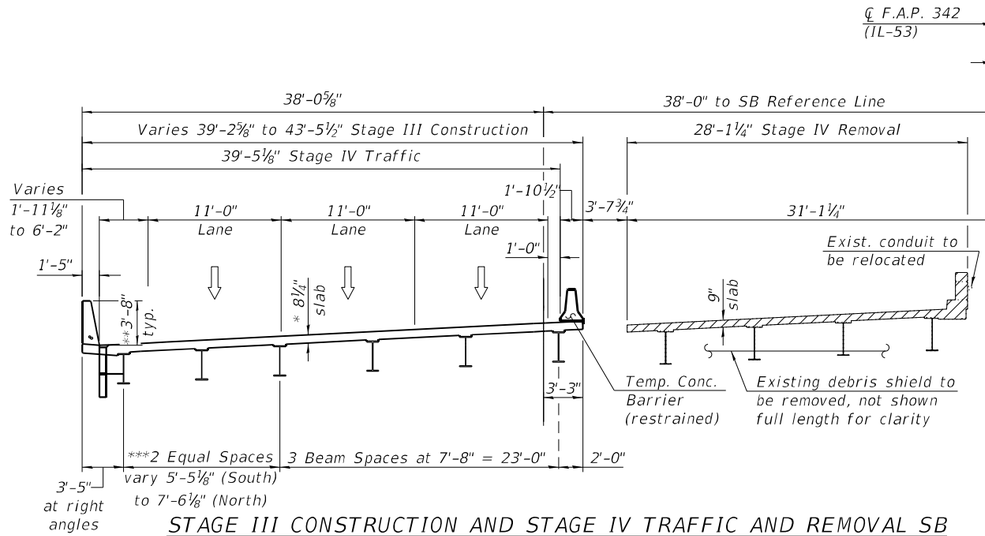

STAGE III CONSTRUCTION AND STAGE IV TRAFFIC AND REMOVAL SB

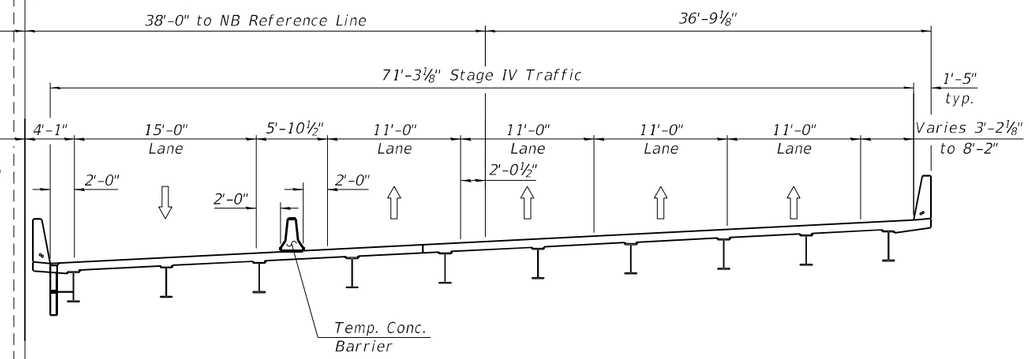

STAGE IV TRAFFIC NB

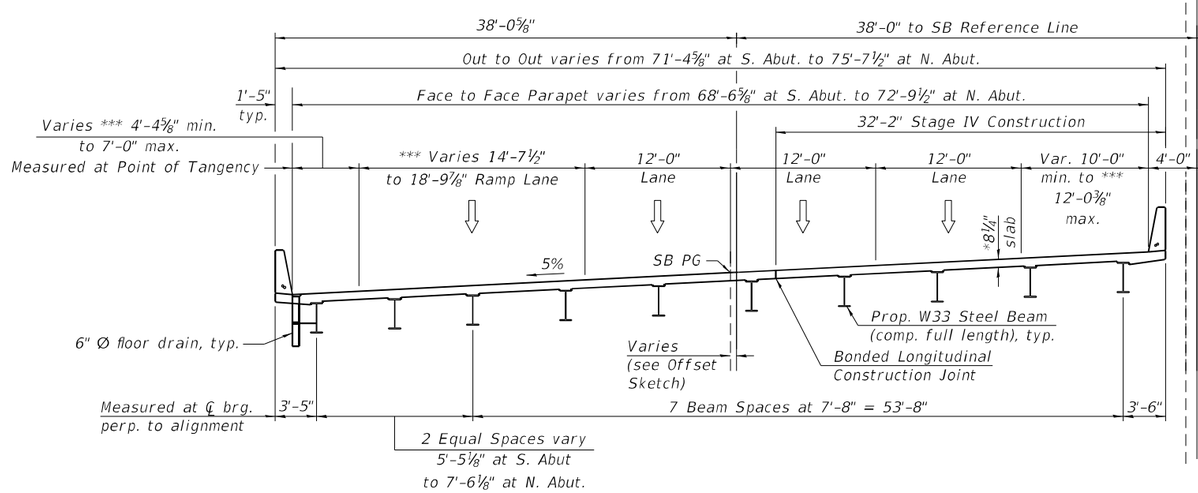

STAGE IV CONSTRUCTION AND FINAL CROSS SECTION SB

(SN 016-0970, Looking North)

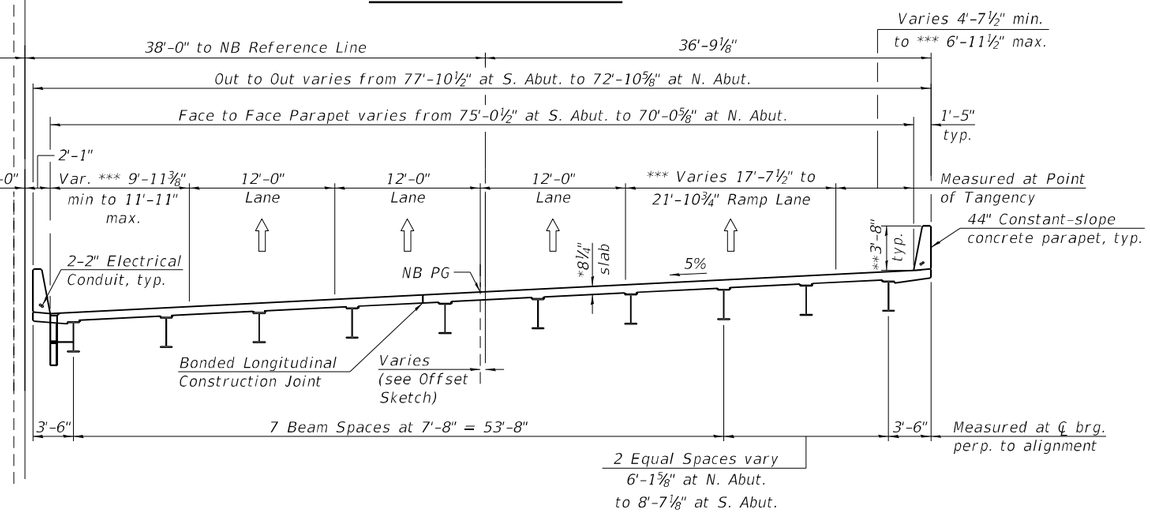

FINAL CROSS SECTION NB

(SN 016-0373, Looking North)

* Prior to grinding
** After Grinding
*** The reported measured shoulder distance was taken radially from the intersection of the outside lane line and shoulder lane at the limits of the bridge deck.

Notes:
1. All dimensions measured perpendicular to reference lines unless otherwise noted.
2. See Lighting Plans for proposed underdeck lighting.
3. For Offset Sketch, see sheet 3 of 73.

MODEL: Default
FILE NAME: S:\IDL\6300-6399\6346\113\Drawings\CAD\Micro-SS4\CAD_Sheets\0160373097O-62W38-005-CS.dgn
9/25/2024 7:53:36 AM

STRAND ASSOCIATES
1170 SOUTH HOUBOLT ROAD
JOLIET, ILLINOIS 60431
(815) 744-4200
IDFPR NO. 184-001273

USER NAME = codyh	DESIGNED - TJE	REVISED -	
	CHECKED - NDR	REVISED -	
PLOT SCALE = 0:2.0000 ':" / in.	DRAWN - CJH	REVISED -	
PLOT DATE = 9/25/2024	CHECKED - TJE	REVISED -	

STATE OF ILLINOIS
DEPARTMENT OF TRANSPORTATION

CONSTRUCTION STAGING (2 OF 2)
STRUCTURE NO. 016-0373 (NB) AND 016-0970 (SB)

SHEET 5 OF 73 SHEETS

F.A. RTE.	SECTION	COUNTY	TOTAL SHEETS	SHEET NO.
342	(531) BR 23	COOK	1211	823
		CONTRACT NO. 62W38		
	ILLINOIS	FED. AID PROJECT		

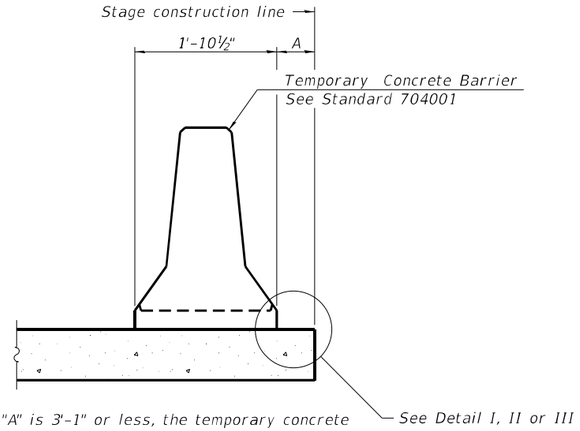

When "A" is 3'-1" or less, the temporary concrete barrier shall be restrained to the new slab according to Detail I, II or III. No restraint is required when "A" is greater than 3'-1".

NEW SLAB OR NEW DECK BEAM

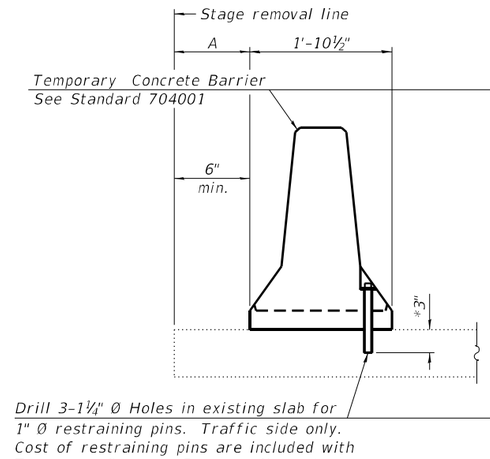

Drill 3-1¼" Ø Holes in existing slab for 1" Ø restraining pins. Traffic side only. Cost of restraining pins are included with Temporary Concrete Barrier. No restraint is required when "A" is greater than 3'-1".

EXISTING SLAB

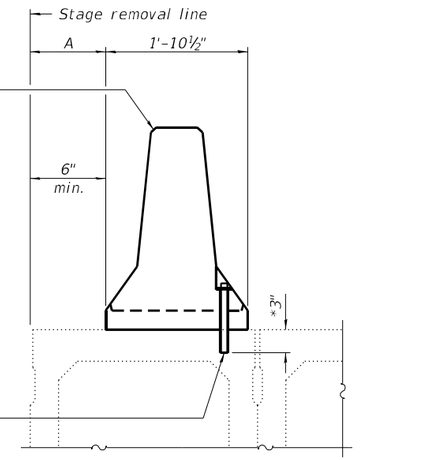

*When hot-mix asphalt wearing surface is present, embedment shall be 3" plus the wearing surface depth.

EXISTING DECK BEAM

SECTIONS THRU SLAB OR DECK BEAM

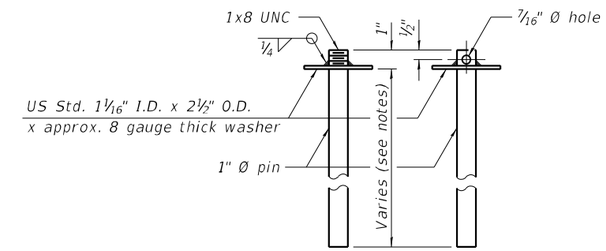

RESTRAINING PIN

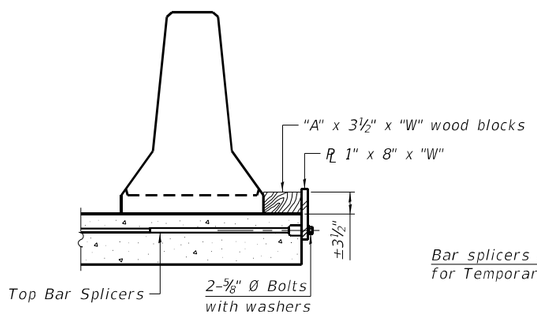

DETAIL I

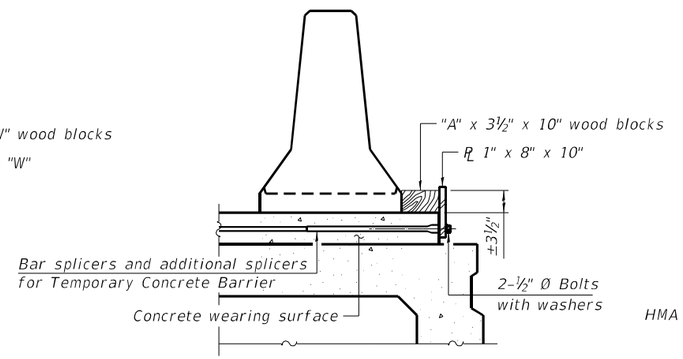

DETAIL II

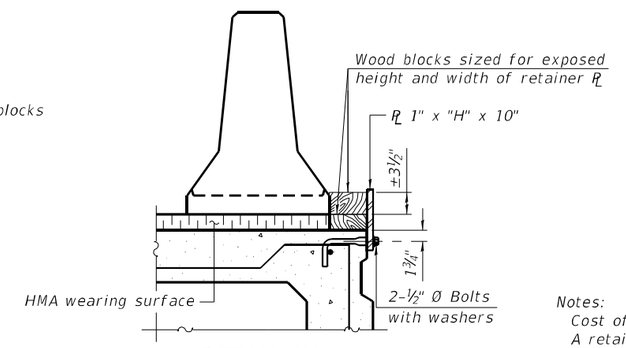

DETAIL III

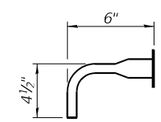

BAR SPLICER FOR #4 BAR - DETAIL III

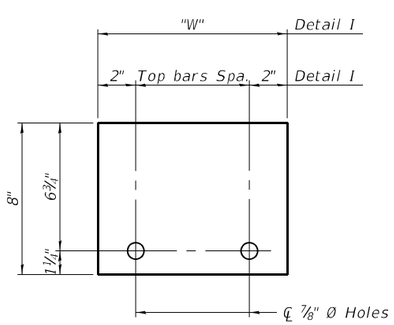

STEEL RETAINER PL 1" x 8" x "W"

(Detail I)

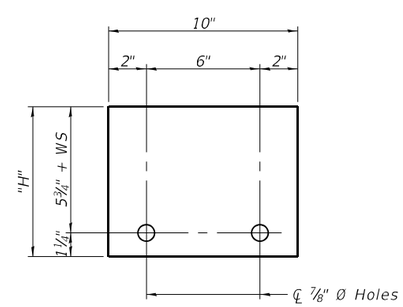

STEEL RETAINER ℄1" x "H" x 10"

(Detail III)

Notes:

Cost of retainer assembly is included with Temporary Concrete Barrier.

A retainer assembly shall be located at the approximate ▯ of each temporary concrete barrier.

The retainer plate shall not be removed until the concrete on the adjacent stage is ready to be poured. For Detail III applications the retainer plate shall not be removed until just prior to placing the adjacent beam.

When the 'A' dimension is less than 1½", the wood block shall be omitted and the barrier shall be placed in direct contact with the steel retainer plate. For deck beam applications the minimum required 'A' distance is 6" to accommodate the shear key clamping device.

Detail I - Installation for a new bridge deck or bridge slab.

Detail II - Installation for a new deck beam with an initial concrete wearing surface. Additional bar splicers shall be provided at 6'-0" centers and paired with the bar splicers of the concrete wearing surface reinforcement to accommodate the installation of the retainer assemblies. The cost of the additional bar splicers is included with the concrete wearing surface.

Detail III - Installation for a new deck beam with no initial wearing surface or with an initial hot-mix asphalt (HMA) wearing surface present. The deck beam directly beneath the temporary concrete barrier shall be fabricated with bar splicer inserts in the side of the beam, as detailed, to accommodate the installation of the retainer assemblies. A pair of bar splicers, 6" apart, shall be placed at 6'-0" centers along the length of the beam. The cost of the bar splicers is included with the deck beam.

RAILING CRITERIA

NCHRP 350 Test Level	3
Railing Weight (plf)	440

R-27

5-15-2023

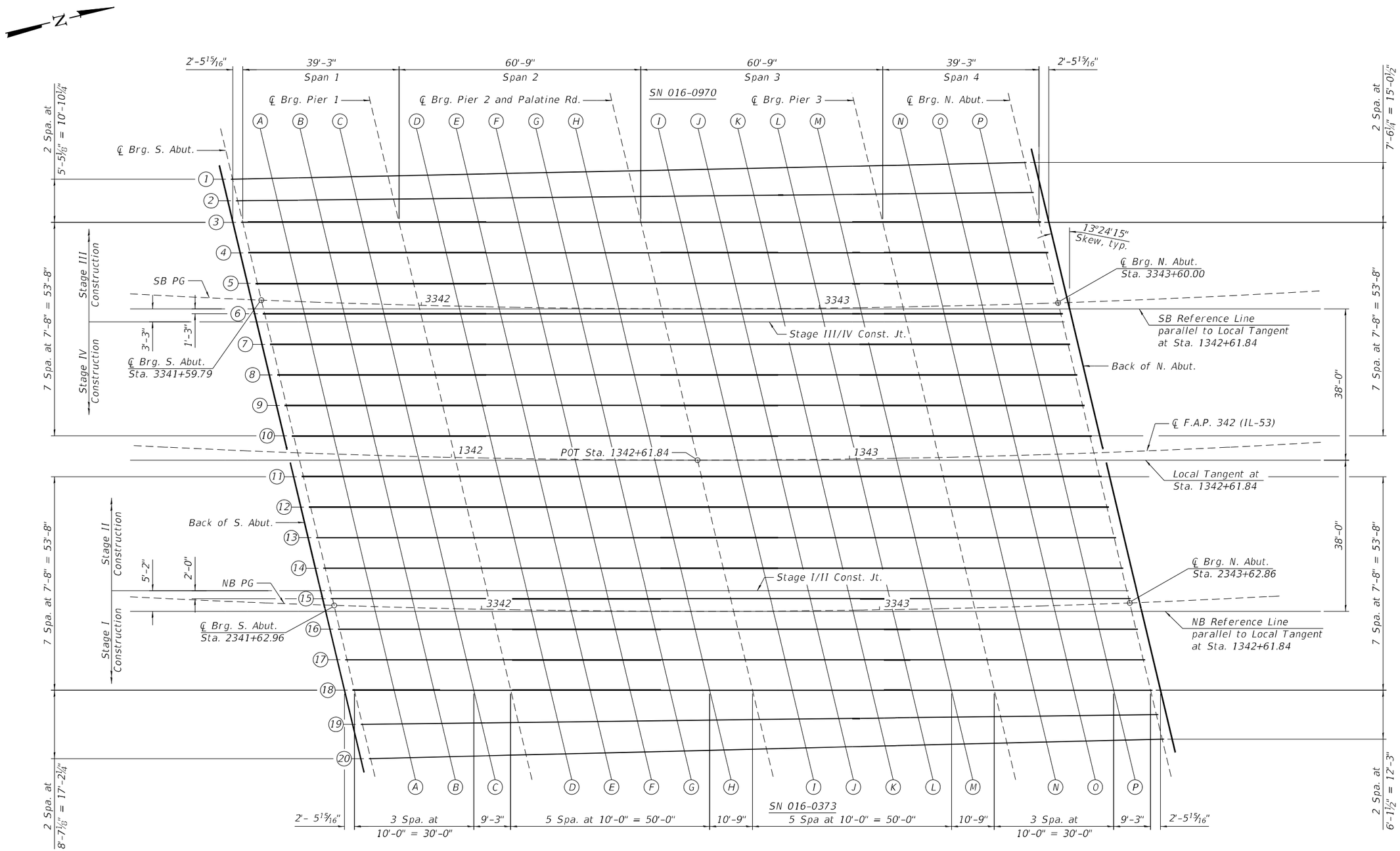

TOP OF DECK SLAB PLAN

Notes:
1. Work this sheet with sheets 8 thru 15 of 73.
2. For Offset sketch, see sheet 3 of 73.

MODEL: Default
FILE NAME: S:\OL\6300--6399\6346113\Drawings\CAD\Micro-SSA\CAD_Sheets\0160373097062W38-007-TSEL.dgn

STRAND ASSOCIATES® 1170 SOUTH HOUBOLT ROAD JOLIET, ILLINOIS 60431 (815) 744-4200 IDFPR NO. 184-001273	USER NAME = codyh	DESIGNED - JAS	REVISED -	STATE OF ILLINOIS DEPARTMENT OF TRANSPORTATION	TOP OF DECK SLAB ELEVATION LAYOUT STRUCTURE NO. 016-0373 (NB) AND 016-0970 (SB)
		CHECKED - ELR	REVISED -		
	PLOT SCALE = 0:2.0000 ':" / in.	DRAWN - CJH	REVISED -		
	PLOT DATE = 9/25/2024	CHECKED - JAS	REVISED -		SHEET 7 OF 73 SHEETS

F.A. RTE.	SECTION	COUNTY	TOTAL SHEETS	SHEET NO.
342	(531) BR 23	COOK	1211	825
CONTRACT NO. 62W38				
ILLINOIS	FED. AID PROJECT			

9/25/2024 7:53:38 AM

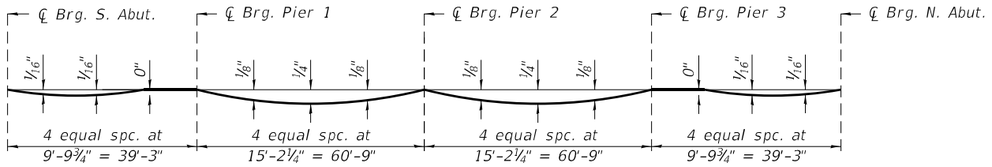

DEAD LOAD DEFLECTION DIAGRAM

(Includes weight of concrete only.)

Note:
The above deflections are not to be used in the field if the engineer is working from the grade elevations adjusted for dead load deflections and grinding as shown below on sheets 8-15.

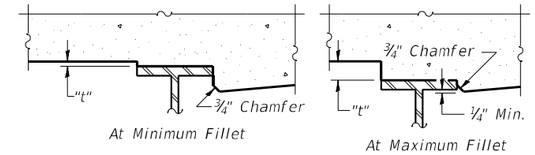

To determine "t": After all structural steel has been erected, elevations of the top flanges of the beams shall be taken at intervals shown on sheet 7. These elevations subtracted from the "Theoretical Grade Elevations Adjusted for Dead Load Deflection and Grinding" shown on sheets 8-15, minus the initial slab thickness prior to grinding, equals the fillet heights "t" above top flange of beams.

The slab is to be ground after curing to achieve smoothness, but the slab is not to be ground to elevations below the "Theoretical Grade Elevations" shown on sheets 8-15. For grinding the deck, see Special Provisions.

FILLET HEIGHTS

BEAM 1

Location	Station	Offset	Theoretical Grade Elevations	Theoretical Grade Elevations Adjusted for DL Deflection & Grinding
BK. S. ABUT.	3341+48.72	-29.89	748.17	748.19
CL BRG. S. ABUT.	3341+51.23	-30.06	748.17	748.19
A	3341+61.27	-30.68	748.20	748.23
B	3341+71.32	-31.27	748.24	748.26
C	3341+81.38	-31.82	748.26	748.29
CL BRG. PIER 1	3341+90.68	-32.30	748.29	748.31
D	3342+00.74	-32.78	748.32	748.34
E	3342+10.81	-33.22	748.34	748.38
F	3342+20.87	-33.62	748.36	748.41
G	3342+30.95	-33.99	748.39	748.42
H	3342+41.02	-34.33	748.41	748.44
CL BRG. PIER 2	3342+51.85	-34.64	748.43	748.45
I	3342+61.93	-34.90	748.45	748.47
J	3342+72.01	-35.12	748.46	748.50
K	3342+82.09	-35.30	748.48	748.52
L	3342+92.17	-35.44	748.49	748.53
M	3343+02.26	-35.55	748.51	748.54
CL BRG. PIER 3	3343+13.10	-35.62	748.52	748.54
N	3343+23.18	-35.65	748.53	748.55
O	3343+33.27	-35.65	748.54	748.56
P	3343+43.35	-35.60	748.54	748.57
CL BRG. N. ABUT.	3343+52.68	-35.53	748.55	748.57
BK. N. ABUT.	3343+55.20	-35.50	748.55	748.57

BEAM 2

Location	Station	Offset	Theoretical Grade Elevations	Theoretical Grade Elevations Adjusted for DL Deflection & Grinding
BK. S. ABUT.	3341+50.26	-24.56	748.44	748.46
CL BRG. S. ABUT.	3341+52.77	-24.69	748.45	748.47
A	3341+62.82	-25.21	748.49	748.51
B	3341+72.88	-25.68	748.52	748.55
C	3341+82.94	-26.13	748.56	748.58
CL BRG. PIER 1	3341+92.25	-26.50	748.59	748.61
D	3342+02.32	-26.87	748.62	748.65
E	3342+12.39	-27.20	748.65	748.69
F	3342+22.47	-27.50	748.68	748.72
G	3342+32.54	-27.76	748.70	748.75
H	3342+42.62	-27.98	748.73	748.76
CL BRG. PIER 2	3342+53.45	-28.18	748.76	748.78
I	3342+63.53	-28.32	748.78	748.81
J	3342+73.61	-28.43	748.80	748.84
K	3342+83.69	-28.50	748.82	748.87
L	3342+93.78	-28.53	748.84	748.88
M	3343+03.86	-28.53	748.86	748.89
CL BRG. PIER 3	3343+14.69	-28.49	748.88	748.90
N	3343+24.78	-28.40	748.89	748.91
O	3343+34.86	-28.29	748.90	748.93
P	3343+44.94	-28.13	748.92	748.94
CL BRG. N. ABUT.	3343+54.26	-27.96	748.93	748.95
BK. N. ABUT.	3343+56.77	-27.90	748.93	748.95

BEAM 3

Location	Station	Offset	Theoretical Grade Elevations	Theoretical Grade Elevations Adjusted for DL Deflection & Grinding
BK. S. ABUT.	3341+51.80	-19.22	748.72	748.74
CL BRG. S. ABUT.	3341+54.31	-19.32	748.73	748.75
A	3341+64.37	-19.73	748.77	748.80
B	3341+74.44	-20.10	748.81	748.84
C	3341+84.51	-20.43	748.85	748.87
CL BRG. PIER 1	3341+93.82	-20.70	748.89	748.91
D	3342+03.90	-20.96	748.92	748.95
E	3342+13.97	-21.19	748.96	749.00
F	3342+24.05	-21.37	748.99	749.04
G	3342+34.13	-21.52	749.02	749.06
H	3342+44.21	-21.63	749.05	749.08
CL BRG. PIER 2	3342+55.05	-21.71	749.09	749.11
I	3342+65.13	-21.75	749.11	749.14
J	3342+75.21	-21.74	749.14	749.18
K	3342+85.29	-21.70	749.17	749.21
L	3342+95.37	-21.63	749.19	749.23
M	3343+05.45	-21.51	749.21	749.25
CL BRG. PIER 3	3343+16.28	-21.35	749.24	749.26
N	3343+26.36	-21.16	749.26	749.28
O	3343+36.44	-20.93	749.27	749.30
P	3343+46.51	-20.66	749.29	749.32
CL BRG. N. ABUT.	3343+55.83	-20.38	749.31	749.33
BK. N. ABUT.	3343+58.34	-20.30	749.31	749.33

BEAM 4

Location	Station	Offset	Theoretical Grade Elevations	Theoretical Grade Elevations Adjusted for DL Deflection & Grinding
BK. S. ABUT.	3341+53.96	-11.64	749.11	749.13
CL BRG. S. ABUT.	3341+56.47	-11.74	749.12	749.14
A	3341+66.50	-12.14	749.16	749.19
B	3341+76.54	-12.50	749.20	749.23
C	3341+86.58	-12.82	749.24	749.26
CL BRG. PIER 1	3341+95.87	-13.09	749.28	749.30
D	3342+05.92	-13.34	749.31	749.34
E	3342+15.97	-13.56	749.35	749.39
F	3342+26.02	-13.74	749.38	749.43
G	3342+36.07	-13.88	749.41	749.45
H	3342+46.12	-13.98	749.44	749.47
CL BRG. PIER 2	3342+56.92	-14.05	749.47	749.49
I	3342+66.98	-14.08	749.50	749.53
J	3342+77.03	-14.07	749.53	749.57
K	3342+87.08	-14.03	749.55	749.60
L	3342+97.13	-13.94	749.58	749.62
M	3343+07.18	-13.82	749.60	749.63
CL BRG. PIER 3	3343+17.99	-13.65	749.62	749.64
N	3343+28.03	-13.45	749.64	749.66
O	3343+38.08	-13.22	749.66	749.68
P	3343+48.13	-12.95	749.68	749.70
CL BRG. N. ABUT.	3343+57.41	-12.66	749.69	749.71
BK. N. ABUT.	3343+59.92	-12.58	749.69	749.72

BEAM 5

Location	Station	Offset	Theoretical Grade Elevations	Theoretical Grade Elevations Adjusted for DL Deflection & Grinding
BK. S. ABUT.	3341+56.12	-4.05	749.50	749.53
CL BRG. S. ABUT.	3341+58.61	-4.16	749.51	749.54
A	3341+68.62	-4.55	749.56	749.58
B	3341+78.63	-4.90	749.59	749.62
C	3341+88.65	-5.22	749.63	749.65
CL BRG. PIER 1	3341+97.91	-5.48	749.67	749.69
D	3342+07.93	-5.72	749.70	749.73
E	3342+17.95	-5.93	749.74	749.78
F	3342+27.97	-6.10	749.77	749.82
G	3342+37.99	-6.24	749.80	749.84
H	3342+48.01	-6.33	749.83	749.86
CL BRG. PIER 2	3342+58.79	-6.40	749.86	749.88
I	3342+68.81	-6.42	749.89	749.92
J	3342+78.84	-6.40	749.92	749.96
K	3342+88.86	-6.35	749.94	749.99
L	3342+98.88	-6.26	749.96	750.01
M	3343+08.91	-6.13	749.99	750.02
CL BRG. PIER 3	3343+19.68	-5.95	750.01	750.03
N	3343+29.70	-5.75	750.03	750.05
O	3343+39.72	-5.51	750.05	750.07
P	3343+49.73	-5.23	750.06	750.09
CL BRG. N. ABUT.	3343+58.99	-4.94	750.08	750.10
BK. N. ABUT.	3343+61.49	-4.85	750.08	750.10

SB PG

Location	Station	Offset	Theoretical Grade Elevations	Theoretical Grade Elevations Adjusted for DL Deflection & Grinding
BK. S. ABUT.	3341+57.26	0.00	749.71	749.73
CL BRG. S. ABUT.	3341+59.79	0.00	749.73	749.75
A	3341+69.89	0.00	749.79	749.82
B	3341+79.98	0.00	749.85	749.87
C	3341+90.06	0.00	749.90	749.92
CL BRG. PIER 1	3341+99.37	0.00	749.95	749.97
D	3342+09.43	0.00	750.00	750.03
E	3342+19.48	0.00	750.04	750.08
F	3342+29.52	0.00	750.08	750.13
G	3342+39.55	0.00	750.12	750.16
H	3342+49.58	0.00	750.15	750.18
CL BRG. PIER 2	3342+60.34	0.00	750.19	750.21
I	3342+70.34	0.00	750.21	750.24
J	3342+80.34	0.00	750.24	750.28
K	3342+90.33	0.00	750.26	750.31
L	3343+00.30	0.00	750.28	750.32
M	3343+10.27	0.00	750.29	750.33
CL BRG. PIER 3	3343+20.98	0.00	750.31	750.33
N	3343+30.93	0.00	750.32	750.34
O	3343+40.88	0.00	750.32	750.35
P	3343+50.81	0.00	750.32	750.35
CL BRG. N. ABUT.	3343+60.00	0.00	750.32	750.34
BK. N. ABUT.	3343+62.48	0.00	750.32	750.34

BEAM 6

Location	Station	Offset	Theoretical Grade Elevations	Theoretical Grade Elevations Adjusted for DL Deflection & Grinding
BK. S. ABUT.	3341+58.26	3.53	749.90	749.92
CL BRG. S. ABUT.	3341+60.75	3.43	749.91	749.93
A	3341+70.73	3.05	749.95	749.97
B	3341+80.71	2.70	749.99	750.01
C	3341+90.70	2.39	750.02	750.05
CL BRG. PIER 1	3341+99.94	2.14	750.06	750.08
D	3342+09.93	1.90	750.09	750.12
E	3342+19.92	1.70	750.13	750.17
F	3342+29.91	1.54	750.16	750.21
G	3342+39.91	1.41	750.19	750.23
H	3342+49.90	1.32	750.22	750.25
CL BRG. PIER 2	3342+60.65	1.26	750.25	750.27
I	3342+70.64	1.25	750.28	750.31
J	3342+80.64	1.27	750.30	750.34
K	3342+90.63	1.33	750.33	750.37
L	3343+00.63	1.43	750.35	750.39
M	3343+10.62	1.56	750.37	750.41
CL BRG. PIER 3	3343+21.36	1.75	750.40	750.42
N	3343+31.35	1.96	750.41	750.44
O	3343+41.34	2.21	750.43	750.46
P	3343+51.33	2.49	750.45	750.47
CL BRG. N. ABUT.	3343+60.57	2.79	750.46	750.48
BK. N. ABUT.	3343+63.06	2.87	750.47	750.49

STAGE III/IV CONST. JT.

Location	Station	Offset	Theoretical Grade Elevations	Theoretical Grade Elevations Adjusted for DL Deflection & Grinding
BK. S. ABUT.	3341+58.82	5.51	750.00	750.02
CL BRG. S. ABUT.	3341+61.31	5.41	750.01	750.03
A	3341+71.28	5.03	750.05	750.07
B	3341+81.26	4.69	750.09	750.11
C	3341+91.23	4.38	750.13	750.15
CL BRG. PIER 1	3342+00.47	4.13	750.16	750.18
D	3342+10.45	3.89	750.19	750.23
E	3342+20.43	3.69	750.23	750.27
F	3342+30.42	3.53	750.26	750.31
G	3342+40.40	3.41	750.29	750.33
H	3342+50.39	3.32	750.32	750.35
CL BRG. PIER 2	3342+61.13	3.26	750.35	750.37
I	3342+71.12	3.25	750.38	750.41
J	3342+81.10	3.28	750.41	750.44
K	3342+91.09	3.34	750.43	750.48
L	3343+01.08	3.44	750.45	750.50
M	3343+11.07	3.57	750.47	750.51
CL BRG. PIER 3	3343+21.80	3.76	750.50	750.52
N	3343+31.78	3.97	750.52	750.54
O	3343+41.76	4.22	750.53	750.56
P	3343+51.74	4.50	750.55	750.57
CL BRG. N. ABUT.	3343+60.97	4.80	750.56	750.58
BK. N. ABUT.	3343+63.46	4.89	750.57	750.59

BEAM 7

Location	Station	Offset	Theoretical Grade Elevations	Theoretical Grade Elevations Adjusted for DL Deflection & Grinding
BK. S. ABUT.	3341+60.39	11.12	750.29	750.31
CL BRG. S. ABUT.	3341+62.87	11.02	750.30	750.32
A	3341+72.83	10.64	750.34	750.36
B	3341+82.78	10.31	750.38	750.40
C	3341+92.74	10.01	750.42	750.44
CL BRG. PIER 1	3342+01.96	9.76	750.45	750.47
D	3342+11.92	9.53	750.48	750.51
E	3342+21.88	9.33	750.52	750.56
F	3342+31.85	9.18	750.55	750.60
G	3342+41.81	9.06	750.58	750.62
H	3342+51.78	8.97	750.61	750.64
CL BRG. PIER 2	3342+62.49	8.93	750.64	750.66
I	3342+72.46	8.92	750.67	750.69
J	3342+82.43	8.95	750.69	750.73
K	3342+92.39	9.01	750.72	750.76
L	3343+02.36	9.12	750.74	750.78
M	3343+12.32	9.26	750.76	750.79
CL BRG. PIER 3	3343+23.04	9.45	750.78	750.80
N	3343+33.00	9.67	750.80	750.82
O	3343+42.96	9.92	750.82	750.84
P	3343+52.92	10.21	750.83	750.86
CL BRG. N. ABUT.	3343+62.13	10.51	750.85	750.87
BK. N. ABUT.	3343+64.61	10.60	750.85	750.87

BEAM 8

Location	Station	Offset	Theoretical Grade Elevations	Theoretical Grade Elevations Adjusted for DL Deflection & Grinding
BK. S. ABUT.	3341+62.51	18.71	750.68	750.70
CL BRG. S. ABUT.	3341+64.99	18.61	750.69	750.71
A	3341+74.91	18.24	750.73	750.76
B	3341+84.84	17.91	750.77	750.79
C	3341+94.77	17.62	750.81	750.83
CL BRG. PIER 1	3342+03.96	17.38	750.84	750.86
D	3342+13.89	17.16	750.87	750.90
E	3342+23.83	16.97	750.91	750.95
F	3342+33.77	16.82	750.94	750.99
G	3342+43.70	16.71	750.97	751.01
H	3342+53.64	16.63	751.00	751.03
CL BRG. PIER 2	3342+64.33	16.59	751.03	751.05
I	3342+74.27	16.59	751.05	751.08
J	3342+84.21	16.62	751.08	751.12
K	3342+94.14	16.70	751.10	751.15
L	3343+04.08	16.81	751.13	751.17
M	3343+14.02	16.95	751.15	751.18
CL BRG. PIER 3	3343+24.70	17.15	751.17	751.19
N	3343+34.63	17.37	751.19	751.21
O	3343+44.57	17.63	751.20	751.23
P	3343+54.50	17.93	751.22	751.25
CL BRG. N. ABUT.	3343+63.68	18.23	751.23	751.26
BK. N. ABUT.	3343+66.16	18.32	751.24	751.26

BEAM 9

Location	Station	Offset	Theoretical Grade Elevations	Theoretical Grade Elevations Adjusted for DL Deflection & Grinding
BK. S. ABUT.	3341+64.62	26.30	751.07	751.09
CL BRG. S. ABUT.	3341+67.09	26.20	751.08	751.10
A	3341+76.99	25.84	751.12	751.15
B	3341+86.89	25.52	751.16	751.19
C	3341+96.79	25.23	751.20	751.22
CL BRG. PIER 1	3342+05.95	25.00	751.23	751.25
D	3342+15.86	24.78	751.26	751.29
E	3342+25.77	24.60	751.30	751.34
F	3342+35.68	24.46	751.33	751.38
G	3342+45.59	24.36	751.36	751.40
H	3342+55.50	24.29	751.39	751.42
CL BRG. PIER 2	3342+66.15	24.25	751.42	751.44
I	3342+76.06	24.26	751.44	751.47
J	3342+85.97	24.30	751.47	751.51
K	3342+95.89	24.38	751.49	751.54
L	3343+05.80	24.50	751.51	751.56
M	3343+15.70	24.65	751.53	751.57
CL BRG. PIER 3	3343+26.36	24.85	751.56	751.58
N	3343+36.26	25.08	751.57	751.60
O	3343+46.17	25.35	751.59	751.62
P	3343+56.07	25.65	751.61	751.63
CL BRG. N. ABUT.	3343+65.23	25.96	751.62	751.64
BK. N. ABUT.	3343+67.70	26.05	751.62	751.64

BEAM 10

Location	Station	Offset	Theoretical Grade Elevations	Theoretical Grade Elevations Adjusted for DL Deflection & Grinding
BK. S. ABUT.	3341+66.71	33.89	751.47	751.49
CL BRG. S. ABUT.	3341+69.18	33.79	751.48	751.50
A	3341+79.05	33.44	751.51	751.54
B	3341+88.92	33.13	751.55	751.58
C	3341+98.80	32.85	751.59	751.61
CL BRG. PIER 1	3342+07.93	32.62	751.62	751.64
D	3342+17.81	32.41	751.65	751.68
E	3342+27.69	32.24	751.69	751.72
F	3342+37.58	32.11	751.72	751.76
G	3342+47.46	32.01	751.75	751.78
H	3342+57.34	31.94	751.78	751.80
CL BRG. PIER 2	3342+67.97	31.92	751.80	751.83
I	3342+77.85	31.93	751.83	751.86
J	3342+87.73	31.98	751.86	751.89
K	3342+97.62	32.07	751.88	751.92
L	3343+07.50	32.19	751.90	751.94
M	3343+17.38	32.35	751.92	751.95
CL BRG. PIER 3	3343+28.00	32.56	751.94	751.96
N	3343+37.88	32.79	751.96	751.98
O	3343+47.76	33.06	751.98	752.00
P	3343+57.63	33.37	751.99	752.02
CL BRG. N. ABUT.	3343+66.76	33.69	752.01	752.03
BK. N. ABUT.	3343+69.22	33.78	752.01	752.03

BEAM 11

Location	Station	Offset	Theoretical Grade Elevations	Theoretical Grade Elevations Adjusted for DL Deflection & Grinding
BK. S. ABUT.	2341+51.58	-31.96	748.77	748.79
CL BRG. S. ABUT.	2341+54.10	-32.05	748.78	748.80
A	2341+64.21	-32.39	748.82	748.85
B	2341+74.32	-32.70	748.86	748.88
C	2341+84.44	-32.97	748.90	748.92
CL BRG. PIER 1	2341+93.80	-33.18	748.93	748.95
D	2342+03.92	-33.38	748.97	749.00
E	2342+14.04	-33.55	749.00	749.04
F	2342+24.16	-33.67	749.03	749.08
G	2342+34.28	-33.76	749.06	749.10
H	2342+44.40	-33.82	749.09	749.12
CL BRG. PIER 2	2342+55.29	-33.83	749.12	749.14
I	2342+65.41	-33.81	749.14	749.17
J	2342+75.53	-33.75	749.17	749.21
K	2342+85.65	-33.66	749.19	749.23
L	2342+95.77	-33.53	749.21	749.25
M	2343+05.89	-33.36	749.23	749.26
CL BRG. PIER 3	2343+16.77	-33.14	749.25	749.27
N	2343+26.89	-32.90	749.27	749.29
O	2343+37.00	-32.62	749.28	749.31
P	2343+47.12	-32.30	749.30	749.32
CL BRG. N. ABUT.	2343+56.47	-31.98	749.31	749.33
BK. N. ABUT.	2343+58.99	-31.89	749.31	749.33

BEAM 12

Location	Station	Offset	Theoretical Grade Elevations	Theoretical Grade Elevations Adjusted for DL Deflection & Grinding
BK. S. ABUT.	2341+53.70	-24.37	749.16	749.19
CL BRG. S. ABUT.	2341+56.22	-24.46	749.17	749.20
A	2341+66.30	-24.79	749.21	749.24
B	2341+76.39	-25.09	749.25	749.28
C	2341+86.48	-25.35	749.29	749.31
CL BRG. PIER 1	2341+95.81	-25.56	749.32	749.34
D	2342+05.90	-25.75	749.36	749.39
E	2342+15.99	-25.91	749.39	749.43
F	2342+26.09	-26.03	749.42	749.47
G	2342+36.18	-26.11	749.45	749.49
H	2342+46.27	-26.16	749.48	749.51
CL BRG. PIER 2	2342+57.13	-26.17	749.51	749.53
I	2342+67.22	-26.14	749.53	749.56
J	2342+77.32	-26.07	749.55	749.59
K	2342+87.41	-25.97	749.58	749.62
L	2342+97.50	-25.83	749.60	749.64
M	2343+07.59	-25.66	749.62	749.65
CL BRG. PIER 3	2343+18.44	-25.43	749.64	749.66
N	2343+28.53	-25.19	749.65	749.67
O	2343+38.62	-24.90	749.67	749.69
P	2343+48.70	-24.58	749.68	749.71
CL BRG. N. ABUT.	2343+58.03	-24.25	749.69	749.71
BK. N. ABUT.	2343+60.54	-24.16	749.69	749.72

BEAM 13

Location	Station	Offset	Theoretical Grade Elevations	Theoretical Grade Elevations Adjusted for DL Deflection & Grinding
BK. S. ABUT.	2341+55.82	-16.77	749.56	749.58
CL BRG. S. ABUT.	2341+58.33	-16.86	749.57	749.59
A	2341+68.38	-17.18	749.61	749.63
B	2341+78.44	-17.47	749.64	749.67
C	2341+88.50	-17.73	749.68	749.70
CL BRG. PIER 1	2341+97.81	-17.93	749.71	749.73
D	2342+07.87	-18.12	749.75	749.78
E	2342+17.94	-18.26	749.78	749.82
F	2342+28.00	-18.38	749.81	749.85
G	2342+38.07	-18.45	749.84	749.88
H	2342+48.14	-18.49	749.87	749.90
CL BRG. PIER 2	2342+58.96	-18.50	749.89	749.91
I	2342+69.02	-18.46	749.92	749.95
J	2342+79.09	-18.39	749.94	749.98
K	2342+89.16	-18.28	749.96	750.01
L	2342+99.22	-18.14	749.98	750.03
M	2343+09.29	-17.96	750.00	750.04
CL BRG. PIER 3	2343+20.10	-17.73	750.02	750.04
N	2343+30.16	-17.47	750.04	750.06
O	2343+40.22	-17.18	750.05	750.08
P	2343+50.28	-16.86	750.07	750.09
CL BRG. N. ABUT.	2343+59.58	-16.52	750.08	750.10
BK. N. ABUT.	2343+62.08	-16.43	750.08	750.10

BEAM 14

Location	Station	Offset	Theoretical Grade Elevations	Theoretical Grade Elevations Adjusted for DL Deflection & Grinding
BK. S. ABUT.	2341+57.92	-9.17	749.95	749.97
CL BRG. S. ABUT.	2341+60.42	-9.26	749.96	749.98
A	2341+70.45	-9.58	750.00	750.02
B	2341+80.48	-9.86	750.03	750.06
C	2341+90.52	-10.11	750.07	750.09
CL BRG. PIER 1	2341+99.80	-10.30	750.10	750.12
D	2342+09.84	-10.48	750.14	750.17
E	2342+19.87	-10.62	750.17	750.21
F	2342+29.91	-10.73	750.20	750.24
G	2342+39.95	-10.80	750.23	750.27
H	2342+49.99	-10.83	750.25	750.28
CL BRG. PIER 2	2342+60.78	-10.83	750.28	750.30
I	2342+70.82	-10.78	750.31	750.33
J	2342+80.86	-10.71	750.33	750.37
K	2342+90.89	-10.59	750.35	750.40
L	2343+00.93	-10.44	750.37	750.41
M	2343+10.97	-10.26	750.39	750.42
CL BRG. PIER 3	2343+21.75	-10.02	750.41	750.43
N	2343+31.79	-9.76	750.42	750.45
O	2343+41.82	-9.46	750.44	750.46
P	2343+51.84	-9.13	750.45	750.48
CL BRG. N. ABUT.	2343+61.12	-8.79	750.46	750.48
BK. N. ABUT.	2343+63.62	-8.69	750.47	750.49

STAGE I/II CONST. JT.

Location	Station	Offset	Theoretical Grade Elevations	Theoretical Grade Elevations Adjusted for DL Deflection & Grinding
BK. S. ABUT.	2341+59.47	-3.56	750.24	750.26
CL BRG. S. ABUT.	2341+61.97	-3.64	750.25	750.27
A	2341+71.98	-3.95	750.29	750.31
B	2341+81.99	-4.23	750.32	750.35
C	2341+92.00	-4.47	750.36	750.38
CL BRG. PIER 1	2342+01.26	-4.66	750.39	750.41
D	2342+11.28	-4.84	750.42	750.45
E	2342+21.29	-4.97	750.45	750.50
F	2342+31.31	-5.07	750.48	750.53
G	2342+41.33	-5.14	750.51	750.55
H	2342+51.35	-5.17	750.54	750.57
CL BRG. PIER 2	2342+62.12	-5.16	750.57	750.59
I	2342+72.14	-5.11	750.59	750.62
J	2342+82.16	-5.03	750.62	750.65
K	2342+92.17	-4.91	750.64	750.68
L	2343+02.19	-4.76	750.66	750.70
M	2343+12.20	-4.57	750.68	750.71
CL BRG. PIER 3	2343+22.97	-4.32	750.69	750.71
N	2343+32.98	-4.06	750.71	750.73
O	2343+42.99	-3.76	750.72	750.75
P	2343+53.00	-3.42	750.74	750.76
CL BRG. N. ABUT.	2343+62.25	-3.08	750.75	750.77
BK. N. ABUT.	2343+64.75	-2.98	750.75	750.77

BEAM 15

Location	Station	Offset	Theoretical Grade Elevations	Theoretical Grade Elevations Adjusted for DL Deflection & Grinding
BK. S. ABUT.	2341+60.01	-1.57	750.34	750.36
CL BRG. S. ABUT.	2341+62.51	-1.66	750.35	750.37
A	2341+72.51	-1.97	750.39	750.41
B	2341+82.52	-2.24	750.43	750.45
C	2341+92.52	-2.48	750.46	750.48
CL BRG. PIER 1	2342+01.78	-2.67	750.49	750.51
D	2342+11.79	-2.84	750.52	750.56
E	2342+21.80	-2.98	750.56	750.60
F	2342+31.81	-3.08	750.59	750.63
G	2342+41.82	-3.14	750.61	750.66
H	2342+51.83	-3.17	750.64	750.67
CL BRG. PIER 2	2342+62.59	-3.15	750.67	750.69
I	2342+72.60	-3.11	750.69	750.72
J	2342+82.61	-3.02	750.72	750.76
K	2342+92.62	-2.90	750.74	750.78
L	2343+02.63	-2.75	750.76	750.80
M	2343+12.64	-2.56	750.78	750.81
CL BRG. PIER 3	2343+23.40	-2.31	750.79	750.82
N	2343+33.40	-2.04	750.81	750.83
O	2343+43.40	-1.74	750.82	750.85
P	2343+53.40	-1.40	750.84	750.86
CL BRG. N. ABUT.	2343+62.65	-1.06	750.85	750.87
BK. N. ABUT.	2343+65.14	-0.96	750.85	750.87

NB PG

Location	Station	Offset	Theoretical Grade Elevations	Theoretical Grade Elevations Adjusted for DL Deflection & Grinding
BK. S. ABUT.	2341+60.45	0.00	750.42	750.44
CL BRG. S. ABUT.	2341+62.96	0.00	750.44	750.46
A	2341+73.04	0.00	750.49	750.51
B	2341+83.11	0.00	750.54	750.56
C	2341+93.17	0.00	750.59	750.61
CL BRG. PIER 1	2342+02.47	0.00	750.63	750.65
D	2342+12.51	0.00	750.67	750.70
E	2342+22.54	0.00	750.71	750.75
F	2342+32.57	0.00	750.74	750.79
G	2342+42.58	0.00	750.77	750.82
H	2342+52.59	0.00	750.80	750.83
CL BRG. PIER 2	2342+63.33	0.00	750.83	750.85
I	2342+73.32	0.00	750.85	750.88
J	2342+83.30	0.00	750.87	750.91
K	2342+93.27	0.00	750.88	750.93
L	2343+03.24	0.00	750.90	750.94
M	2343+13.19	0.00	750.90	750.94
CL BRG. PIER 3	2343+23.89	0.00	750.91	750.93
N	2343+33.83	0.00	750.91	750.93
O	2343+43.76	0.00	750.91	750.94
P	2343+53.68	0.00	750.91	750.93
CL BRG. N. ABUT.	2343+62.86	0.00	750.90	750.92
BK. N. ABUT.	2343+65.33	0.00	750.90	750.92

BEAM 16

Location	Station	Offset	Theoretical Grade Elevations	Theoretical Grade Elevations Adjusted for DL Deflection & Grinding
BK. S. ABUT.	2341+62.10	6.03	750.73	750.75
CL BRG. S. ABUT.	2341+64.58	5.95	750.74	750.76
A	2341+74.56	5.64	750.78	750.80
B	2341+84.54	5.37	750.82	750.84
C	2341+94.51	5.14	750.85	750.87
CL BRG. PIER 1	2342+03.75	4.96	750.88	750.90
D	2342+13.73	4.80	750.91	750.94
E	2342+23.71	4.67	750.95	750.99
F	2342+33.69	4.58	750.98	751.02
G	2342+43.68	4.52	751.00	751.04
H	2342+53.66	4.50	751.03	751.06
CL BRG. PIER 2	2342+64.39	4.52	751.06	751.08
I	2342+74.38	4.57	751.08	751.11
J	2342+84.36	4.66	751.10	751.14
K	2342+94.34	4.79	751.12	751.17
L	2343+04.32	4.95	751.14	751.19
M	2343+14.30	5.15	751.16	751.20
CL BRG. PIER 3	2343+25.03	5.40	751.18	751.20
N	2343+35.01	5.67	751.20	751.22
O	2343+44.98	5.98	751.21	751.24
P	2343+54.95	6.32	751.22	751.25
CL BRG. N. ABUT.	2343+64.17	6.67	751.23	751.25
BK. N. ABUT.	2343+66.66	6.77	751.24	751.26

BEAM 17

Location	Station	Offset	Theoretical Grade Elevations	Theoretical Grade Elevations Adjusted for DL Deflection & Grinding
BK. S. ABUT.	2341+64.17	13.63	751.12	751.14
CL BRG. S. ABUT.	2341+66.65	13.55	751.13	751.15
A	2341+76.59	13.26	751.17	751.20
B	2341+86.54	12.99	751.21	751.23
C	2341+96.50	12.77	751.24	751.26
CL BRG. PIER 1	2342+05.70	12.59	751.27	751.29
D	2342+15.66	12.44	751.30	751.33
E	2342+25.61	12.31	751.33	751.38
F	2342+35.57	12.23	751.36	751.41
G	2342+45.52	12.18	751.39	751.43
H	2342+55.48	12.17	751.42	751.45
CL BRG. PIER 2	2342+66.18	12.19	751.45	751.47
I	2342+76.14	12.25	751.47	751.50
J	2342+86.09	12.35	751.49	751.53
K	2342+96.05	12.48	751.51	751.56
L	2343+06.00	12.65	751.53	751.57
M	2343+15.96	12.85	751.55	751.58
CL BRG. PIER 3	2343+26.65	13.11	751.57	751.59
N	2343+36.60	13.39	751.58	751.60
O	2343+46.55	13.70	751.60	751.62
P	2343+56.49	14.05	751.61	751.63
CL BRG. N. ABUT.	2343+65.69	14.41	751.62	751.64
BK. N. ABUT.	2343+68.17	14.51	751.62	751.64

BEAM 18

Location	Station	Offset	Theoretical Grade Elevations	Theoretical Grade Elevations Adjusted for DL Deflection & Grinding
BK. S. ABUT.	2341+66.22	21.24	751.51	751.54
CL BRG. S. ABUT.	2341+68.70	21.16	751.52	751.55
A	2341+78.62	20.87	751.56	751.59
B	2341+88.54	20.61	751.60	751.62
C	2341+98.47	20.40	751.63	751.65
CL BRG. PIER 1	2342+07.65	20.23	751.66	751.68
D	2342+17.58	20.08	751.69	751.72
E	2342+27.50	19.96	751.72	751.77
F	2342+37.43	19.88	751.75	751.80
G	2342+47.36	19.84	751.78	751.82
H	2342+57.29	19.83	751.81	751.84
CL BRG. PIER 2	2342+67.96	19.87	751.83	751.85
I	2342+77.89	19.93	751.86	751.88
J	2342+87.82	20.04	751.88	751.92
K	2342+97.75	20.17	751.90	751.94
L	2343+07.68	20.35	751.92	751.96
M	2343+17.60	20.56	751.94	751.97
CL BRG. PIER 3	2343+28.27	20.82	751.95	751.97
N	2343+38.19	21.11	751.97	751.99
O	2343+48.11	21.43	751.98	752.01
P	2343+58.03	21.78	751.99	752.02
CL BRG. N. ABUT.	2343+67.20	22.14	752.00	752.02
BK. N. ABUT.	2343+69.67	22.24	752.01	752.03

BEAM 19

Location	Station	Offset	Theoretical Grade Elevations	Theoretical Grade Elevations Adjusted for DL Deflection & Grinding
BK. S. ABUT.	2341+68.53	29.79	751.96	751.98
CL BRG. S. ABUT.	2341+70.99	29.69	751.96	751.98
A	2341+80.84	29.28	751.99	752.02
B	2341+90.71	28.91	752.02	752.05
C	2342+00.57	28.58	752.05	752.07
CL BRG. PIER 1	2342+09.70	28.30	752.07	752.09
D	2342+19.56	28.04	752.10	752.13
E	2342+29.43	27.81	752.12	752.16
F	2342+39.30	27.61	752.14	752.19
G	2342+49.18	27.45	752.17	752.21
H	2342+59.05	27.33	752.19	752.22
CL BRG. PIER 2	2342+69.67	27.24	752.20	752.23
I	2342+79.54	27.18	752.22	752.25
J	2342+89.42	27.17	752.24	752.28
K	2342+99.29	27.19	752.25	752.30
L	2343+09.17	27.24	752.26	752.31
M	2343+19.04	27.34	752.28	752.31
CL BRG. PIER 3	2343+29.65	27.47	752.29	752.31
N	2343+39.53	27.64	752.29	752.32
O	2343+49.40	27.84	752.30	752.33
P	2343+59.27	28.07	752.31	752.33
CL BRG. N. ABUT.	2343+68.39	28.32	752.31	752.33
BK. N. ABUT.	2343+70.86	28.39	752.31	752.33

BEAM 20

Location	Station	Offset	Theoretical Grade Elevations	Theoretical Grade Elevations Adjusted for DL Deflection & Grinding
BK. S. ABUT.	2341+70.81	38.35	752.40	752.42
CL BRG. S. ABUT.	2341+73.26	38.22	752.40	752.42
A	2341+83.06	37.70	752.42	752.45
B	2341+92.86	37.21	752.45	752.47
C	2342+02.66	36.76	752.47	752.49
CL BRG. PIER 1	2342+11.73	36.38	752.49	752.51
D	2342+21.54	36.00	752.50	752.54
E	2342+31.35	35.65	752.52	752.57
F	2342+41.17	35.34	752.54	752.59
G	2342+50.98	35.07	752.55	752.59
H	2342+60.80	34.83	752.56	752.59
CL BRG. PIER 2	2342+71.36	34.61	752.58	752.60
I	2342+81.18	34.44	752.59	752.61
J	2342+91.00	34.30	752.60	752.63
K	2343+00.82	34.21	752.60	752.65
L	2343+10.65	34.14	752.61	752.65
M	2343+20.47	34.11	752.61	752.65
CL BRG. PIER 3	2343+31.03	34.12	752.62	752.64
N	2343+40.86	34.17	752.62	752.64
O	2343+50.68	34.25	752.62	752.65
P	2343+60.50	34.36	752.62	752.65
CL BRG. N. ABUT.	2343+69.59	34.50	752.62	752.64
BK. N. ABUT.	2343+72.04	34.54	752.62	752.64

W. FACE OF PARAPET NB BRIDGE

Location	Station	Offset	Theoretical Grade Elevations	Theoretical Grade Elevations Adjusted for Grinding
S. End S. Approach	2341+21.00	-35.18	748.42	748.44
A1	2341+31.35	-34.84	748.50	748.52
A2	2341+41.69	-34.47	748.59	748.61
N. End. S. Approach	2341+52.03	-34.06	748.67	748.69

W. EDGE OF PAVEMENT

Location	Station	Offset	Theoretical Grade Elevations	Theoretical Grade Elevations Adjusted for Grinding
S. End S. Approach	2341+24.26	-24.00	749.00	749.02
A1	2341+34.47	-24.00	749.06	749.09
A2	2341+44.67	-24.00	749.13	749.15
N. End. S. Approach	2341+54.85	-24.00	749.19	749.21

STAGE I/II CONST. JT.

Location	Station	Offset	Theoretical Grade Elevations	Theoretical Grade Elevations Adjusted for Grinding
S. End S. Approach	2341+30.49	-2.42	750.12	750.14
A1	2341+40.49	-2.85	750.16	750.18
A2	2341+50.49	-3.24	750.20	750.22
N. End. S. Approach	2341+60.50	-3.59	750.24	750.26

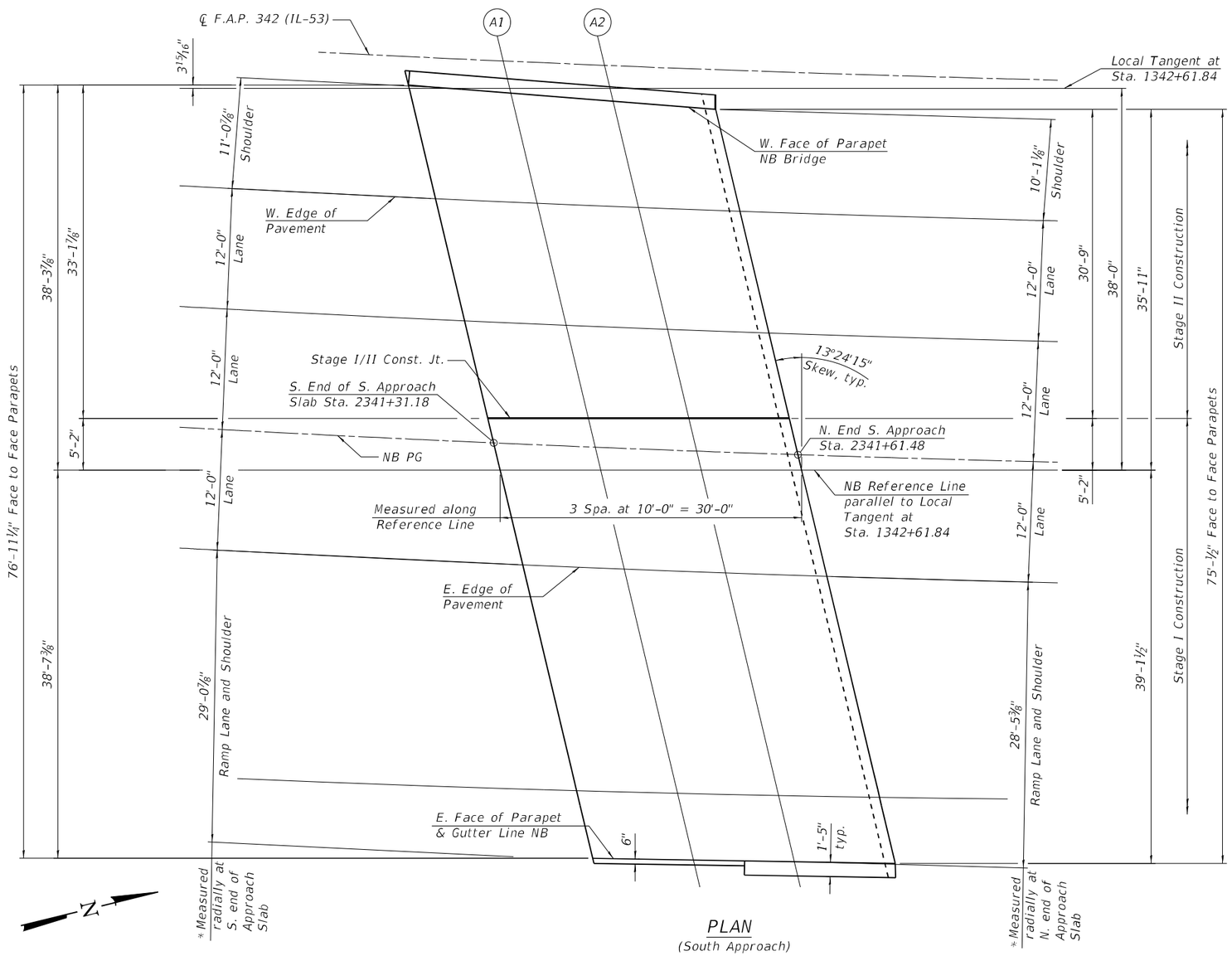

PLAN
(South Approach)

NB PG

Location	Station	Offset	Theoretical Grade Elevations	Theoretical Grade Elevations Adjusted for Grinding
S. End S. Approach	2341+31.18	0.00	750.24	750.26
A1	2341+41.29	0.00	750.31	750.33
A2	2341+51.39	0.00	750.37	750.39
N. End. S. Approach	2341+61.48	0.00	750.43	750.45

E. EDGE OF PAVEMENT

Location	Station	Offset	Theoretical Grade Elevations	Theoretical Grade Elevations Adjusted for Grinding
S. End S. Approach	2341+34.59	12.00	750.87	750.89
A1	2341+44.65	12.00	750.93	750.95
A2	2341+54.71	12.00	750.99	751.01
N. End. S. Approach	2341+64.75	12.00	751.04	751.07

E. FACE OF PARAPET & GUTTER LINE NB

Location	Station	Offset	Theoretical Grade Elevations	Theoretical Grade Elevations Adjusted for Grinding
S. End S. Approach	2341+42.68	40.88	752.36	752.38
A1	2341+52.57	40.67	752.41	752.43
A2	2341+62.47	40.49	752.46	752.48
N. End. S. Approach	2341+72.37	40.35	752.50	752.52

Notes:
1. All dimensions measured perpendicular to reference line unless otherwise noted.
2. For Offset sketch see sheet 3 of 73.
* The reported measured shoulder distance was taken radially from the intersection of the outside lane line at the limits of the bridge deck taken at the front face of the parapet.

W. FACE OF PARAPET NB BRIDGE

Location	Station	Offset	Theoretical Grade Elevations	Theoretical Grade Elevations Adjusted for Grinding
S. End N. Approach	2343+57.53	-34.03	749.20	749.22
A3	2343+67.47	-34.51	749.17	749.19
A4	2343+77.42	-34.97	749.14	749.16
N. End N. Approach	2343+87.37	-35.38	749.10	749.12

W. EDGE OF PAVEMENT

Location	Station	Offset	Theoretical Grade Elevations	Theoretical Grade Elevations Adjusted for Grinding
S. End N. Approach	2343+59.55	-24.00	749.70	749.72
A3	2343+69.55	-24.00	749.69	749.72
A4	2343+79.54	-24.00	749.68	749.70
N. End N. Approach	2343+89.53	-24.00	749.67	749.69

STAGE I/II CONST. JT.

Location	Station	Offset	Theoretical Grade Elevations	Theoretical Grade Elevations Adjusted for Grinding
S. End N. Approach	2343+63.72	-3.02	750.75	750.77
A3	2343+73.72	-2.61	750.76	750.78
A4	2343+83.72	-2.16	750.77	750.79
N. End N. Approach	2343+93.72	-1.68	750.77	750.80

NB PG

Location	Station	Offset	Theoretical Grade Elevations	Theoretical Grade Elevations Adjusted for Grinding
S. End N. Approach	2343+64.32	0.00	750.90	750.92
A3	2343+74.23	0.00	750.89	750.91
A4	2343+84.13	0.00	750.88	750.90
N. End N. Approach	2343+94.03	0.00	750.86	750.88

E. EDGE OF PAVEMENT

Location	Station	Offset	Theoretical Grade Elevations	Theoretical Grade Elevations Adjusted for Grinding
S. End N. Approach	2343+66.67	12.00	751.50	751.52
A3	2343+76.54	12.00	751.49	751.51
A4	2343+86.40	12.00	751.47	751.49
N. End N. Approach	2343+96.25	12.00	751.45	751.47

E. FACE OF PARAPET AND GUTTER LINE NB

Location	Station	Offset	Theoretical Grade Elevations	Theoretical Grade Elevations Adjusted for Grinding
S. End N. Approach	2343+71.43	36.63	752.72	752.74
A3	2343+81.18	36.45	752.70	752.72
A4	2343+90.92	36.31	752.68	752.70
N. End N. Approach	2344+00.67	36.20	752.66	752.68

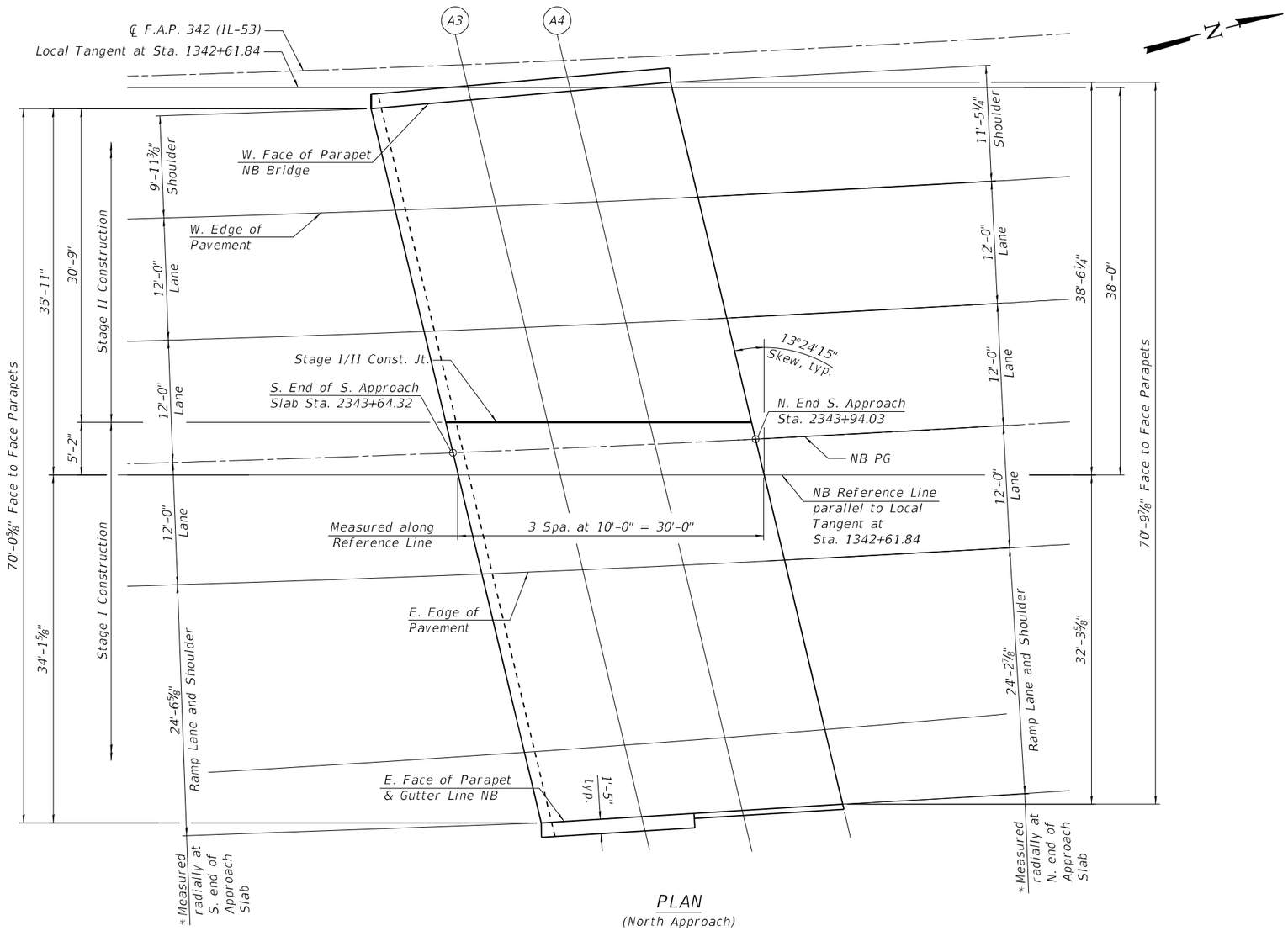

PLAN
(North Approach)

Notes:
1. All dimensions measured perpendicular to reference line unless otherwise noted.
2. For Offset sketch see sheet 3 of 73.
* The reported measured shoulder distance was taken radially from the intersection of the outside lane line at the limits of the bridge deck taken at the front face of the parapet.

MODEL: Default
FILE NAME: S:\IOL\16300-63991\6346\113\Drawings\CAD\Micro-SS4\CAD_Sheets\016037309 70-62W38-017-ASE2.dgn
9/25/2024 7:53:48 AM

STRAND ASSOCIATES
1170 SOUTH HOUBOLT ROAD
JOLIET, ILLINOIS 60431
(815) 744-4200
IDFPR NO. 184-001273

USER NAME = codyh	DESIGNED - JAS	REVISED -	
	CHECKED - ELR	REVISED -	
PLOT SCALE = 0:2.0000 ':" / in.	DRAWN - CJH	REVISED -	
PLOT DATE = 9/25/2024	CHECKED - JAS	REVISED -	

STATE OF ILLINOIS
DEPARTMENT OF TRANSPORTATION

TOP OF APPROACH SLAB ELEVATIONS (2 OF 4)
STRUCTURE NO. 016-0373 (NB)

SHEET 17 OF 73 SHEETS

F.A. RTE.	SECTION	COUNTY	TOTAL SHEETS	SHEET NO.
342	(531)BR 23	COOK	1211	835
		CONTRACT NO. 62W38		
	ILLINOIS	FED. AID PROJECT		

W. FACE OF PARAPET & GUTTER LINE SB

Location	Station	Offset	Theoretical Grade Elevations	Theoretical Grade Elevations Adjusted for Grinding
S. End S. Approach	3341+17.69	-34.34	747.73	747.75
A1	3341+28.20	-33.57	747.84	747.86
A2	3341+38.69	-32.76	747.95	747.98
N. End S. Approach	3341+49.19	-31.92	748.07	748.09

W. EDGE OF PAVEMENT

Location	Station	Offset	Theoretical Grade Elevations	Theoretical Grade Elevations Adjusted for Grinding
S. End S. Approach	3341+24.38	-12.00	748.89	748.91
A1	3341+34.57	-12.00	748.96	748.99
A2	3341+44.74	-12.00	749.03	749.05
N. End S. Approach	3341+54.90	-12.00	749.10	749.12

SB PG

Location	Station	Offset	Theoretical Grade Elevations	Theoretical Grade Elevations Adjusted for Grinding
S. End S. Approach	3341+27.93	0.00	749.52	749.54
A1	3341+38.07	0.00	749.59	749.61
A2	3341+48.19	0.00	749.66	749.68
N. End S. Approach	3341+58.30	0.00	749.72	749.74

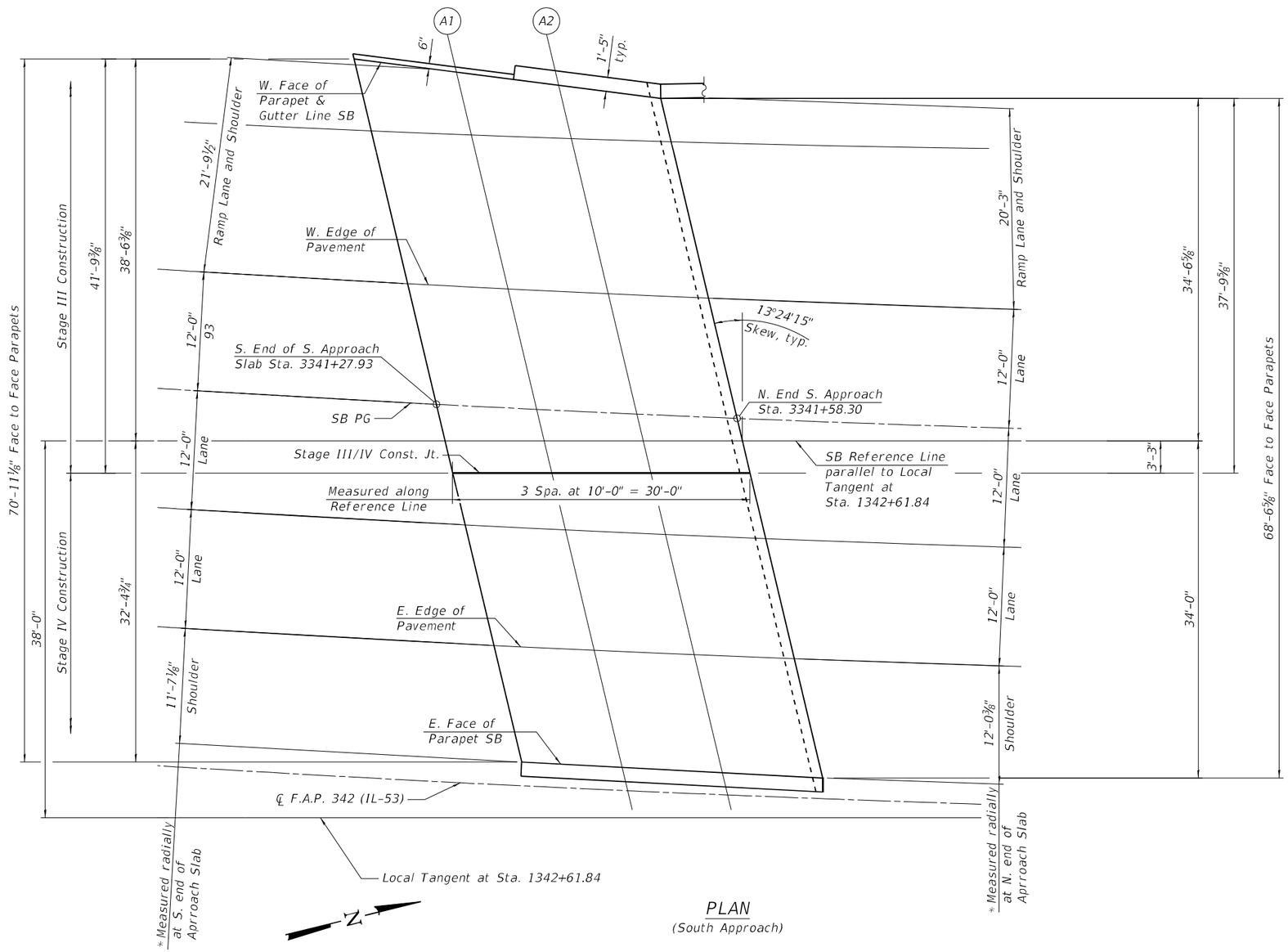

PLAN
(South Approach)

Stage III/IV Const. Jt.

Location	Station	Offset	Theoretical Grade Elevations	Theoretical Grade Elevations Adjusted for Grinding
S. End S. Approach	3341+29.94	6.85	749.87	749.90
A1	3341+39.90	6.35	749.92	749.94
A2	3341+49.87	5.89	749.96	749.98
N. End S. Approach	3341+59.84	5.47	750.00	750.02

E. EDGE OF PAVEMENT

Location	Station	Offset	Theoretical Grade Elevations	Theoretical Grade Elevations Adjusted for Grinding
S. End S. Approach	3341+34.93	24.00	750.77	750.79
A1	3341+44.97	24.00	750.84	750.86
A2	3341+54.99	24.00	750.90	750.92
N. End S. Approach	3341+65.01	24.00	750.96	750.98

E. FACE OF PARAPET SB BRIDGE

Location	Station	Offset	Theoretical Grade Elevations	Theoretical Grade Elevations Adjusted for Grinding
S. End S. Approach	3341+38.27	35.61	751.37	751.39
A1	3341+48.28	35.67	751.44	751.46
A2	3341+58.29	35.77	751.51	751.53
N. End S. Approach	3341+68.29	35.91	751.58	751.60

Notes:
1. All dimensions measured perpendicular to reference line unless otherwise noted.
2. For Offset sketch see sheet 3 of 73.
* The reported measured shoulder distance was taken radially from the intersection of the outside lane line at the limits of the bridge deck taken at the front face of the parapet.

W. FACE OF PARAPET & GUTTER LINE SB

Location	Station	Offset	Theoretical Grade Elevations	Theoretical Grade Elevations Adjusted for Grinding
S. End N. Approach	3343+53.75	-37.50	748.45	748.47
A3	3343+63.65	-38.29	748.41	748.43
A4	3343+73.56	-39.05	748.37	748.39
N. End N. Approach	3343+83.48	-39.77	748.32	748.34

W. EDGE OF PAVEMENT

Location	Station	Offset	Theoretical Grade Elevations	Theoretical Grade Elevations Adjusted for Grinding
S. End N. Approach	3343+59.01	-12.00	749.72	749.74
A3	3343+68.98	-12.00	749.72	749.74
A4	3343+78.94	-12.00	749.71	749.73
N. End N. Approach	3343+88.90	-12.00	749.70	749.73

SB PG

Location	Station	Offset	Theoretical Grade Elevations	Theoretical Grade Elevations Adjusted for Grinding
S. End N. Approach	3343+61.46	0.00	750.32	750.34
A3	3343+71.38	0.00	750.32	750.34
A4	3343+81.29	0.00	750.31	750.33
N. End N. Approach	3343+91.20	0.00	750.30	750.32

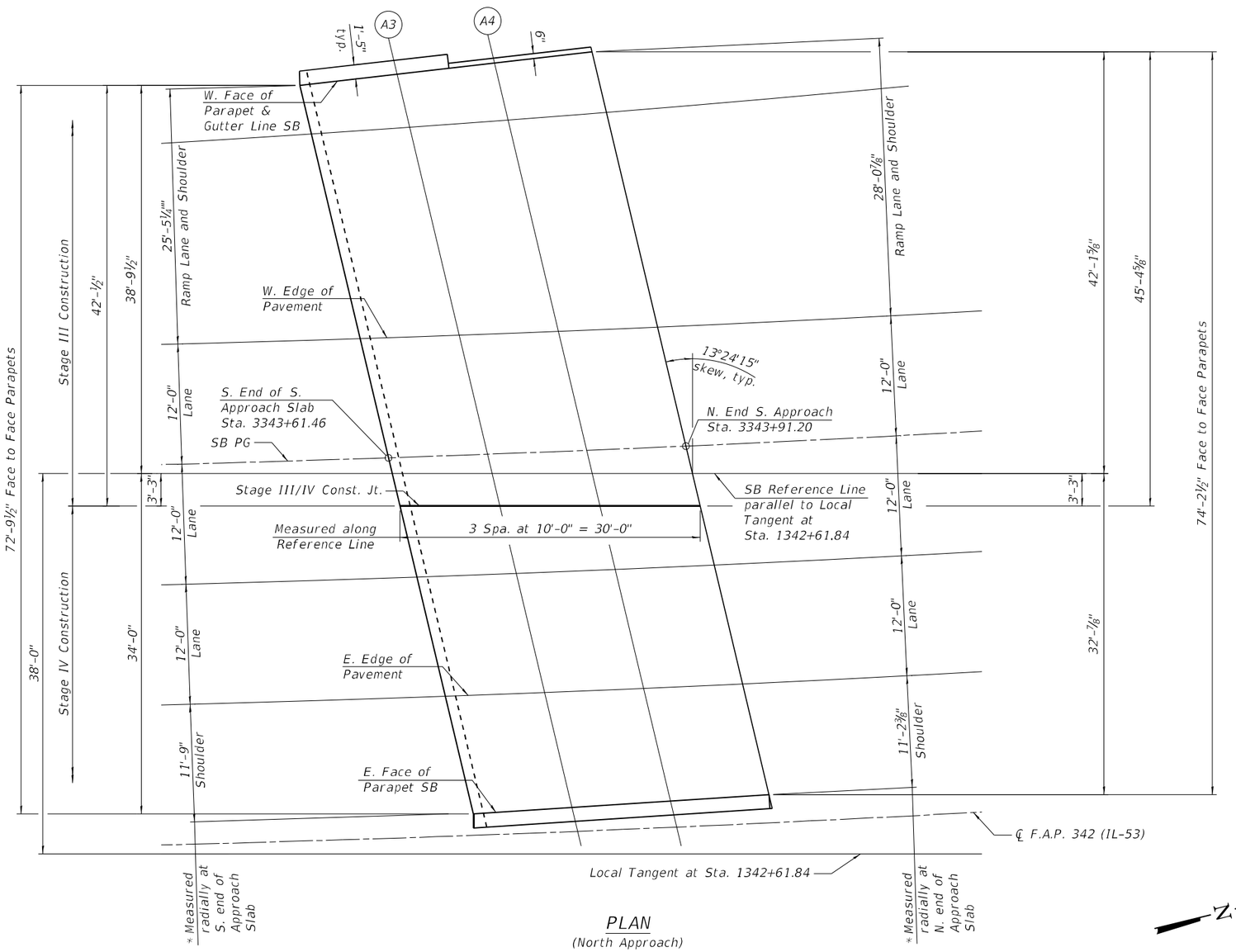

PLAN
(North Approach)

Stage III/IV Const. Jt.

Location	Station	Offset	Theoretical Grade Elevations	Theoretical Grade Elevations Adjusted for Grinding
S. End N. Approach	3343+62.44	4.85	750.57	750.59
A3	3343+72.41	5.21	750.58	750.60
A4	3343+82.39	5.61	750.59	750.61
N. End N. Approach	3343+92.36	6.05	750.60	750.62

E. EDGE OF PAVEMENT

Location	Station	Offset	Theoretical Grade Elevations	Theoretical Grade Elevations Adjusted for Grinding
S. End N. Approach	3343+66.28	24.00	751.52	751.54
A3	3343+76.11	24.00	751.52	751.54
A4	3343+85.93	24.00	751.51	751.53
N. End N. Approach	3343+95.75	24.00	751.50	751.52

E. FACE OF PARAPET SB BRIDGE

Location	Station	Offset	Theoretical Grade Elevations	Theoretical Grade Elevations Adjusted for Grinding
S. End N. Approach	3343+68.63	35.84	752.11	752.13
A3	3343+78.36	35.58	752.09	752.11
A4	3343+88.10	35.35	752.07	752.09
N. End N. Approach	3343+97.84	35.16	752.05	752.07

Notes:
1. All dimensions measured perpendicular to reference line unless otherwise noted.
2. For Offset sketch see sheet 3 of 73.

* The reported measured shoulder distance was taken radially from the intersection of the outside lane line at the limits of the bridge deck taken at the front face of the parapet.

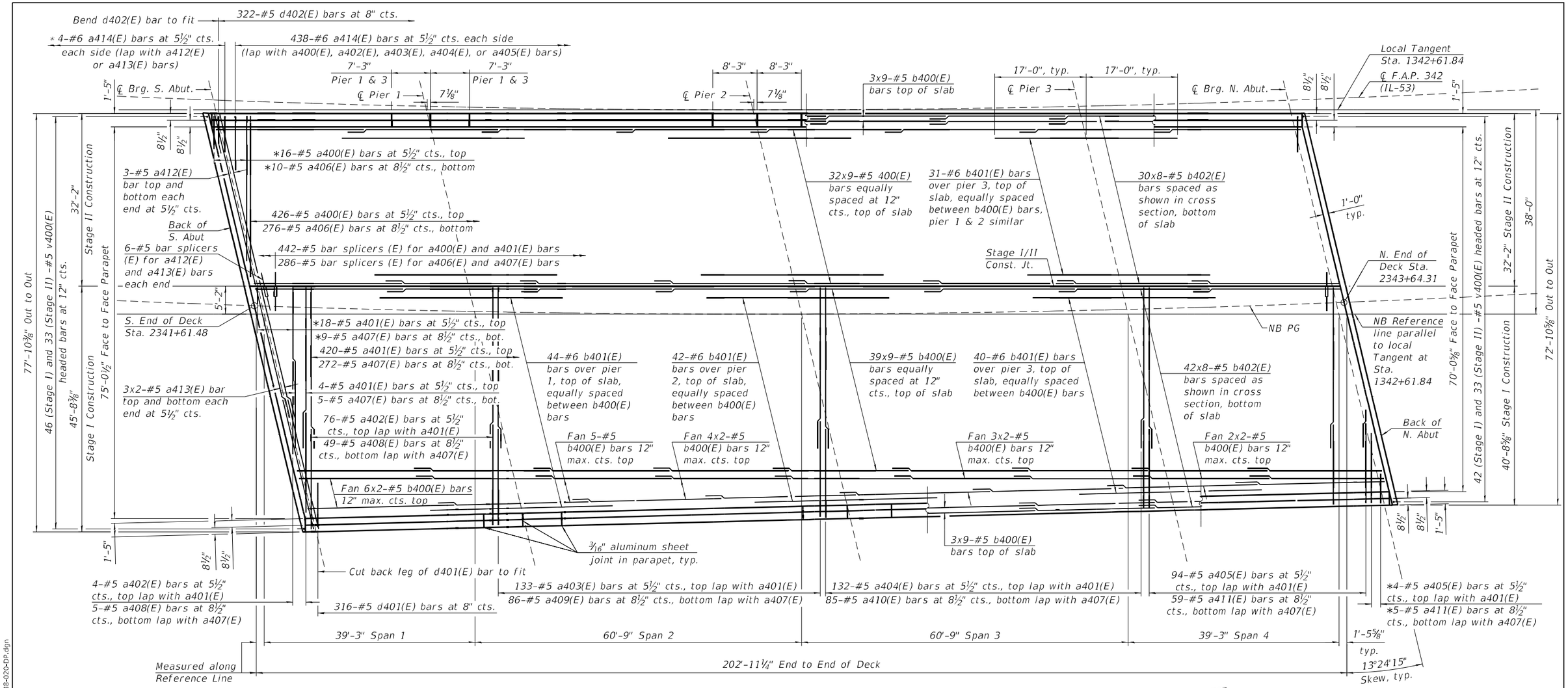

PLAN

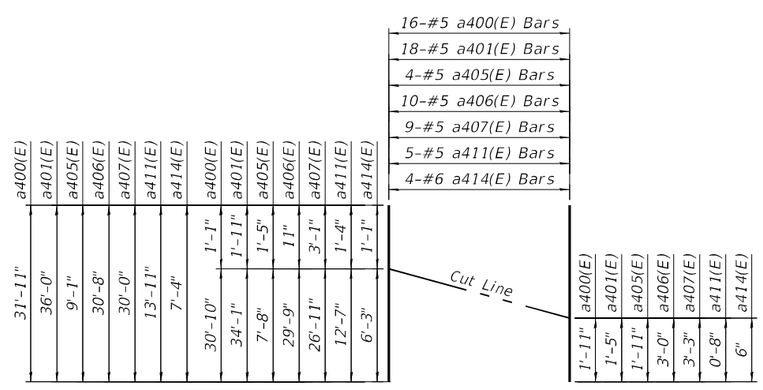

DECK FIELD CUTTING DIAGRAM

* Order bars full length. Cut to fit skew and use remainder of bars in opposite end of deck. Bars shorter than minimum lap length do not need to be placed in the deck.

MINIMUM BAR LAP

#5 bar = 3'-6"

Notes:

1. Bars indicated thus 20 x 3-#5 etc. indicates 20 lines of bars with 3 lengths per line.
2. Work this sheet with sheet 21 and 25 of 73.
3. For Offset sketch see sheet 3 of 73.

MODEL: Default
FILE NAME: S:\IDL\6300-6399\6346\113\Drawings\CAD\Micro-SS4\CAD_Sheets\0160373097D-62W38-020-DP.dgn

STRAND ASSOCIATES
1170 SOUTH HOUBOLT ROAD
JOLIET, ILLINOIS 60431
(815) 744-4200
IDFPR NO. 184-001273

USER NAME = codyh	DESIGNED - DMH	REVISED -	
	CHECKED - NDR	REVISED -	
PLOT SCALE = 0:2.0000 ':" / in.	DRAWN - DMH	REVISED -	
PLOT DATE = 9/25/2024	CHECKED - TJE	REVISED -	

STATE OF ILLINOIS
DEPARTMENT OF TRANSPORTATION

DECK PLAN
STRUCTURE NO. 016-0373 (NB)

SHEET 20 OF 73 SHEETS

F.A. RTE.	SECTION	COUNTY	TOTAL SHEETS	SHEET NO.
342	(531)BR 23	COOK	1211	838
		CONTRACT NO. 62W38		
	ILLINOIS	FED. AID PROJECT		

9/25/2024 7:53:52 AM

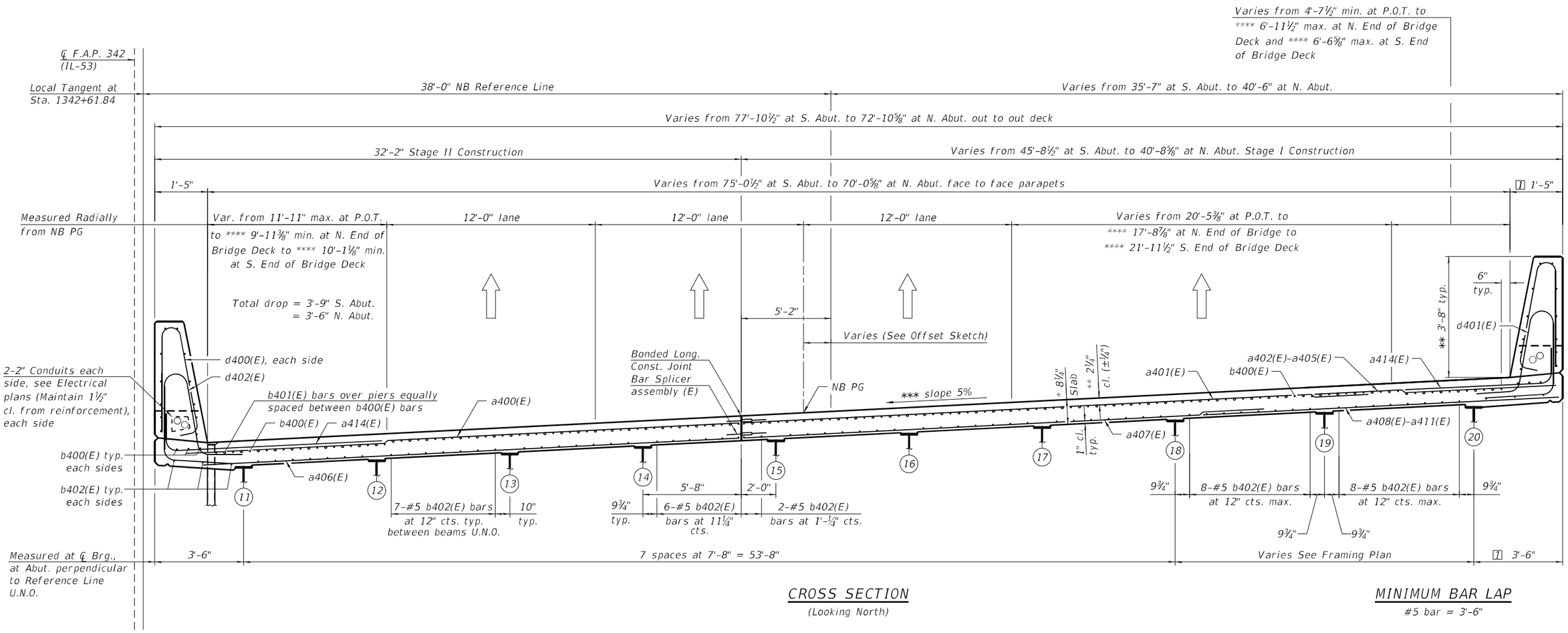

CROSS SECTION

(Looking North)

MINIMUM BAR LAP

#5 bar = 3'-6"

* Prior to Grinding
** After Grinding
*** Measured Radially
**** The reported measured shoulder distance was taken radially from the intersection of the outside lane line at the limits of the bridge deck taken at the front face of the parapet.
7 Measured perpendicular to Fascia Beam.

Notes:
1. See sheet 25 of 73 for superstructure details and Bill of Material.
2. Bars indicated thus 20 x 3-#5 etc. indicates 20 lines of bars with 3 lengths per line.
3. For Offset sketch, see sheet 3 of 73.

STRAND ASSOCIATES®
1170 SOUTH HOUBOLT ROAD
JOLIET, ILLINOIS 60431
(815) 744-4200
IDFPR NO. 184-001273

USER NAME = codyh	DESIGNED - DMH	REVISED -	
	CHECKED - NDR	REVISED -	
PLOT SCALE = 0:2.0000 ':" / in.	DRAWN - DMH	REVISED -	
PLOT DATE = 9/25/2024	CHECKED - TJE	REVISED -	

STATE OF ILLINOIS
DEPARTMENT OF TRANSPORTATION

CROSS SECTION
STRUCTURE NO. 016-0373 (NB)

SHEET 21 OF 73 SHEETS

F.A. RTE.	SECTION	COUNTY	TOTAL SHEETS	SHEET NO.
342	(531)BR 23	COOK	1211	839
		CONTRACT NO. 62W38		
		ILLINOIS	FED. AID PROJECT	

MODEL: Default
FILE NAME: S:\IOL\16300-6399\6246\113\Drawings\CAD\Micros-SS4\CAD_Sheets\0160373097D-62W38-021-DCS.dgn
9/25/2024 7:53:53 AM

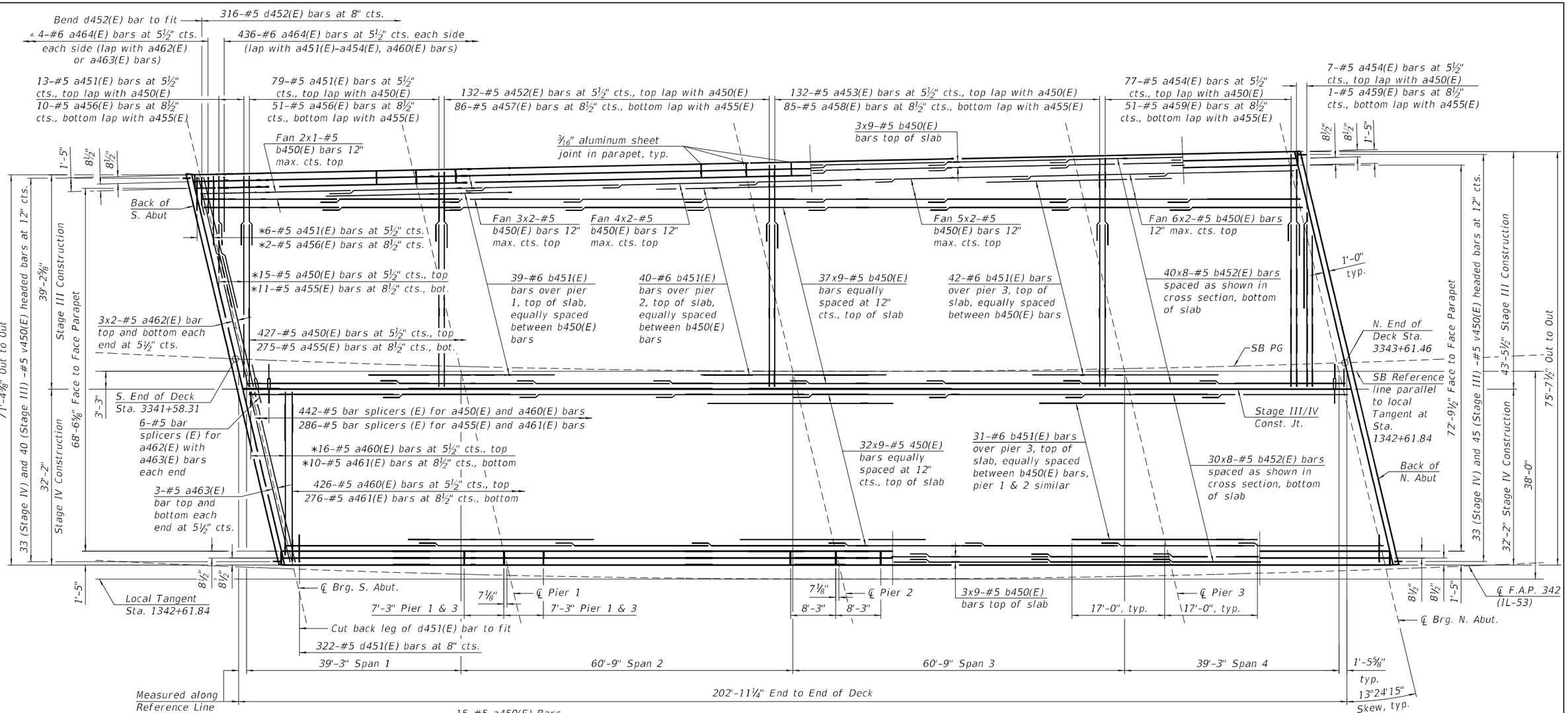

PLAN

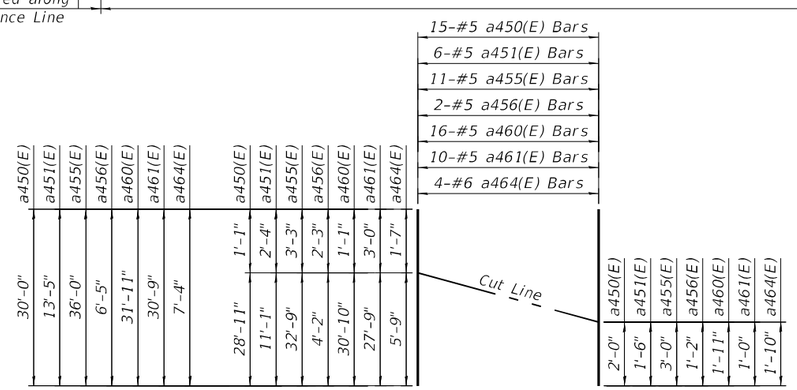

DECK FIELD CUTTING DIAGRAM

* Order bars full length. Cut to fit skew and use remainder of bars in opposite end of deck. Bars shorter than minimum lap length do not need to be placed in the deck.

MINIMUM BAR LAP

#5 bar = 3'-6"

Notes:

1. Bars indicated thus 20 x 3-#5 etc. indicates 20 lines of bars with 3 lengths per line.
2. Work this sheet with sheet 23 and 25 of 73.
3. For Offset sketch see sheet 3 of 73.

MODEL: Default
FILE NAME: S:\IOL\6300-6399\6346\113\Drawings\CAD\Micros-SSA\CAD_Sheets\0160373097O-62W38-022-DP.dgn

STRAND ASSOCIATES®
1170 SOUTH HOUBOLT ROAD
JOLIET, ILLINOIS 60431
(815) 744-4200
IDFPR NO. 184-001273

USER NAME = codyh	DESIGNED - DMH	REVISED -	
	CHECKED - NDR	REVISED -	
PLOT SCALE = 0:2.0000 ':" / in.	DRAWN - DMH	REVISED -	
PLOT DATE = 9/25/2024	CHECKED - TJE	REVISED -	

STATE OF ILLINOIS
DEPARTMENT OF TRANSPORTATION

DECK PLAN
STRUCTURE NO. 016-0970 (SB)

SHEET 22 OF 73 SHEETS

F.A. RTE.	SECTION	COUNTY	TOTAL SHEETS	SHEET NO.
342	(531)BR 23	COOK	1211	840

CONTRACT NO. 62W38

ILLINOIS | FED. AID PROJECT

9/25/2024 7:53:55 AM

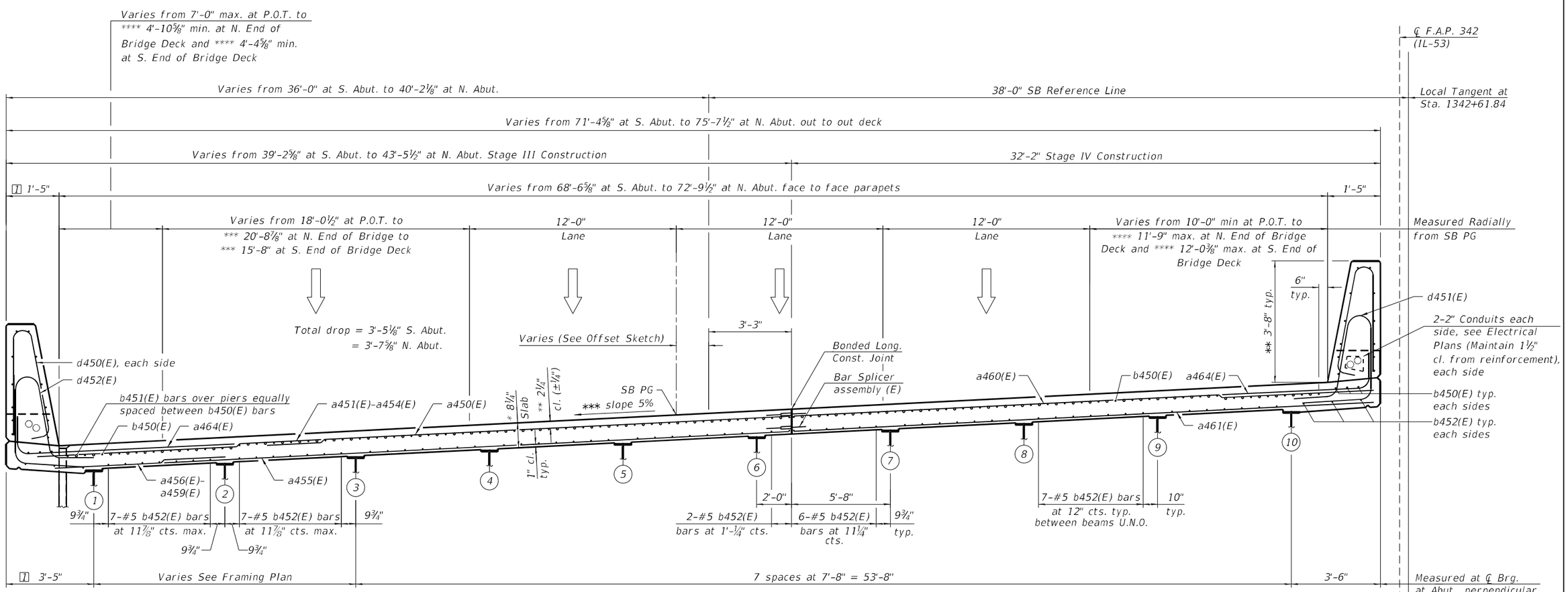

CROSS SECTION

(Looking North)

MINIMUM BAR LAP

#5 bar = 3'-6" Bottom

* Prior to Grinding
** After Grinding
*** Measured Radially
7 Measured perpendicular to Fascia Beam

Notes:
1. See sheet 25 of 73 for superstructure details and Bill of Material.
2. Bars indicated thus 20 x 3-#5 etc. indicates 20 lines of bars with 3 lengths per line.
3. For Offset sketch, see sheet 3 of 73.

MODEL: Default
FILE NAME: S:\OL\6300-6399\6346\113\Drawings\CAD\Micro-SS4\CAD_Sheets\0160373097O-62W38-023-DCS.dgn

STRAND ASSOCIATES
1170 SOUTH HOUBOLT ROAD
JOLIET, ILLINOIS 60431
(815) 744-4200
IDFPR NO. 184-001273

USER NAME = codyh	DESIGNED - DMH	REVISED -	
	CHECKED - NDR	REVISED -	
PLOT SCALE = 0:2.0000 ':" / in.	DRAWN - DMH	REVISED -	
PLOT DATE = 9/25/2024	CHECKED - TJE	REVISED -	

STATE OF ILLINOIS
DEPARTMENT OF TRANSPORTATION

CROSS SECTION
STRUCTURE NO. 016-0970 (SB)

SHEET 23 OF 73 SHEETS

F.A. RTE.	SECTION	COUNTY	TOTAL SHEETS	SHEET NO.
342	(531)BR 23	COOK	1211	841

CONTRACT NO. 62W38

ILLINOIS | FED. AID PROJECT

9/25/2024 7:53:56 AM

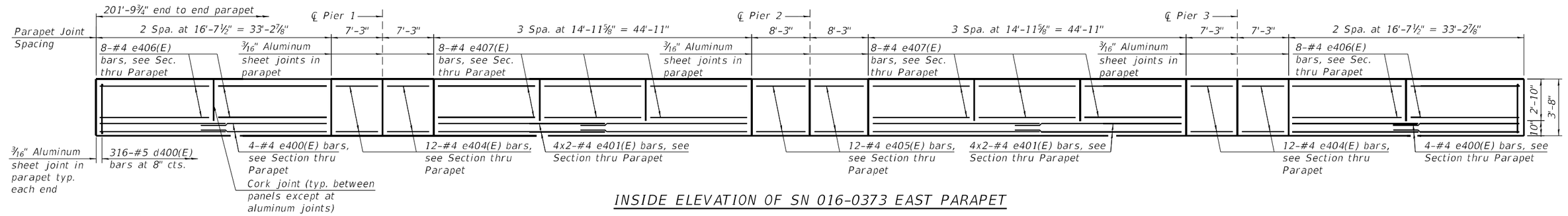

INSIDE ELEVATION OF SN 016-0373 EAST PARAPET

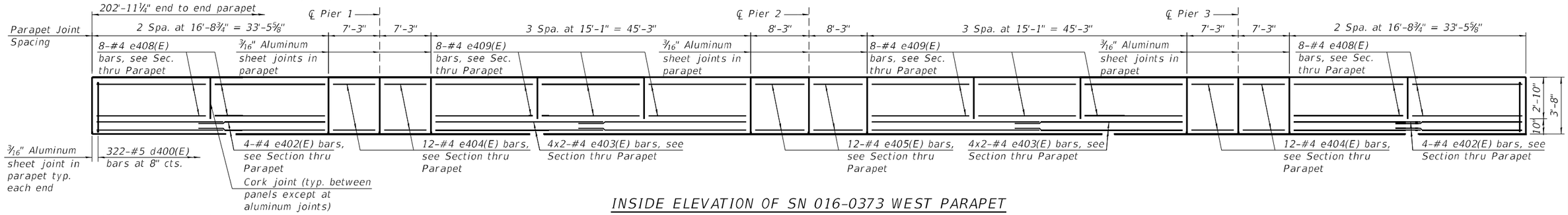

INSIDE ELEVATION OF SN 016-0373 WEST PARAPET

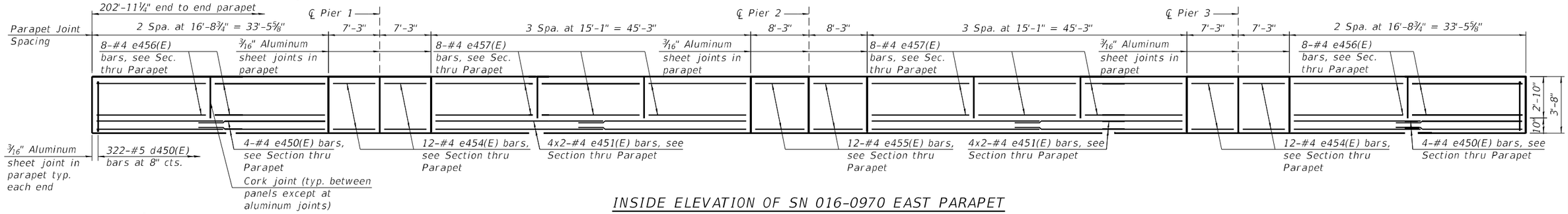

INSIDE ELEVATION OF SN 016-0970 EAST PARAPET

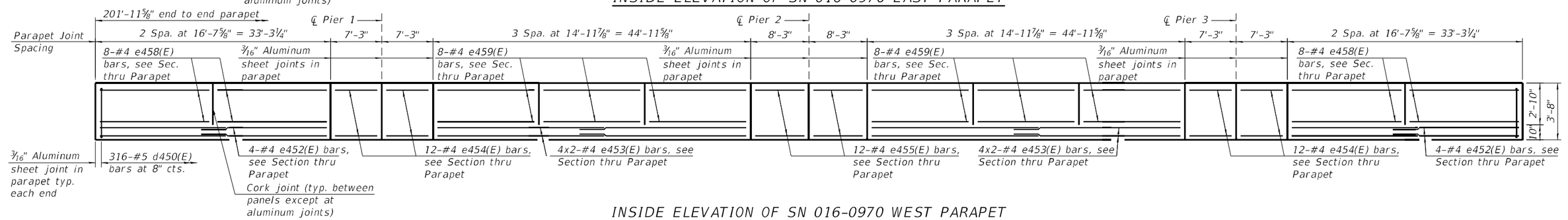

INSIDE ELEVATION OF SN 016-0970 WEST PARAPET

MINIMUM BAR LAP

#4 Bar = 2'-5"

Notes:
1. See sheet 25 of 73 for bar quantities.

MODEL: Default
FILE NAME: S:\IOL6300-6399\6346113\Drawings\CAD\Micro-SS4\CAD_Sheets\0160373097D-62W38-024-PE.dgn

STRAND ASSOCIATES
1170 SOUTH HOUBOLT ROAD
JOLIET, ILLINOIS 60431
(815) 744-4200
IDFPR NO. 184-001273

USER NAME = codyh	DESIGNED - DMH	REVISED -	
	CHECKED - NDR	REVISED -	
PLOT SCALE = 0:2.0000 ':" / in.	DRAWN - DMH	REVISED -	
PLOT DATE = 9/25/2024	CHECKED - TJE	REVISED -	

STATE OF ILLINOIS
DEPARTMENT OF TRANSPORTATION

PARAPET ELEVATIONS
STRUCTURE NO. 016-0373 (NB) AND 016-0970 (SB)

F.A. RTE.	SECTION	COUNTY	TOTAL SHEETS	SHEET NO.
342	(531) BR 23	COOK	1211	842
		CONTRACT NO. 62W38		
		ILLINOIS	FED. AID PROJECT	

9/25/2024 7:53:57 AM

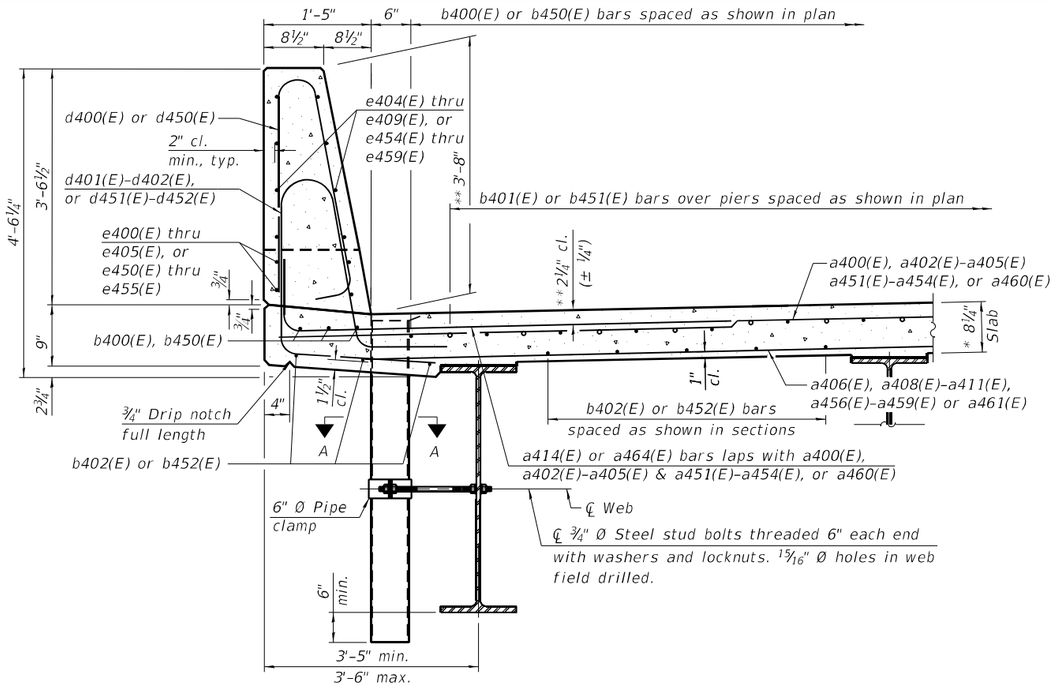

SECTION THRU PARAPET

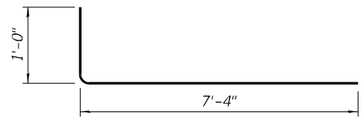

BAR a414(E), a464(E)

BAR v400(E), v450(E)

(Headed v400(E) - 154 Bar Terminators)
(Headed v450(E) - 151 Bar Terminators)

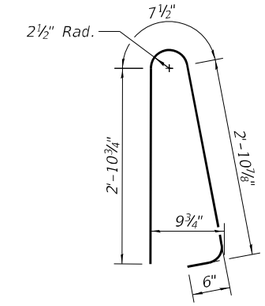

BAR d400(E), d450(E)

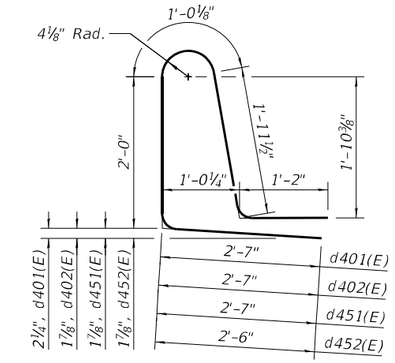

BAR d401(E), d402(E), d451(E), d452(E)

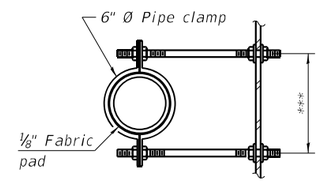

SECTION A-A

***Dimension as required by pipe clamp

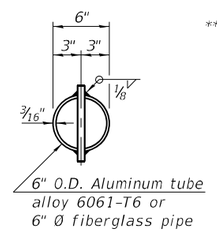

TOP PLAN

(Showing aluminum tube)

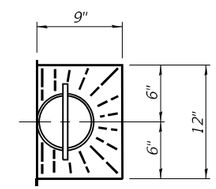

TOP PLAN

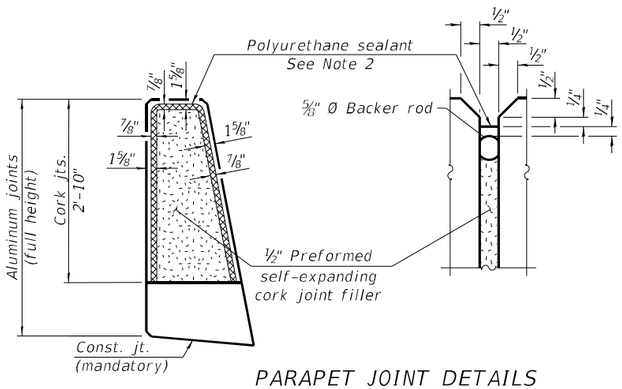

PARAPET JOINT DETAILS

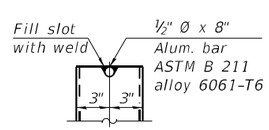

ALUMINUM TUBE

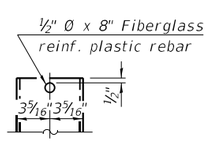

FIBERGLASS PIPE

SUPERSTRUCTURE BILL OF MATERIAL

Structure No. 016-0373 (NB)

Bar	No.	Size	Length	Shape
a400(E)	442	#5	32'-0"	———
a401(E)	442	#5	36'-0"	———
a402(E)	80	#5	12'-11"	———
a403(E)	133	#5	12'-1"	———
a404(E)	132	#5	10'-7"	———
a405(E)	98	#5	9'-1"	———
a406(E)	286	#5	30'-8"	———
a407(E)	286	#5	30'-0"	———
a408(E)	54	#5	17'-10"	———
a409(E)	86	#5	16'-11"	———
a410(E)	85	#5	15'-5"	———
a411(E)	64	#5	13'-11"	———
a412(E)	12	#5	32'-9"	———
a413(E)	24	#5	25'-3"	———
a414(E)	884	#6	8'-4"	———
b400(E)	728	#5	25'-9"	———
b401(E)	219	#6	34'-9"	———
b402(E)	576	#5	28'-6"	———
d400(E)	638	#5	6'-11"	
d401(E)	316	#5	8'-9"	
d402(E)	322	#5	8'-9"	
e400(E)	8	#4	32'-11"	———
e401(E)	16	#4	23'-6"	———
e402(E)	8	#4	33'-2"	———
e403(E)	16	#4	23'-8"	———
e404(E)	96	#4	6'-11"	———
e405(E)	48	#4	7'-11"	———
e406(E)	32	#4	16'-4"	———
e407(E)	48	#4	14'-8"	———
e408(E)	32	#4	16'-5"	———
e409(E)	48	#4	14'-9"	———
v400(E)	154	#5	3'-1"	
Concrete Superstructures			CU YD	483.5
Protective Coat			SQ YD	1,834
Reinforcement Bars, Epoxy Coated			POUND	119,720
Bar Splicers			EACH	740
Bar Terminators			EACH	154
Bridge Deck Grooving (Longitudinal)			SQ YD	1,584
Diamond Grinding (Bridge Section)			SQ YD	1,610

Structure No. 016-0970 (SB)

Bar	No.	Size	Length	Shape
a450(E)	442	#5	30'-0"	———
a451(E)	98	#5	13'-5"	———
a452(E)	132	#5	14'-8"	———
a453(E)	132	#5	15'-11"	———
a454(E)	84	#5	16'-8"	———
a455(E)	286	#5	36'-0"	———
a456(E)	63	#5	6'-2"	———
a457(E)	86	#5	7'-6"	———
a458(E)	85	#5	8'-9"	———
a459(E)	52	#5	9'-6"	———
a460(E)	442	#5	31'-11"	———
a461(E)	286	#5	30'-9"	———
a462(E)	24	#5	21'-9"	———
a463(E)	12	#5	32'-10"	———
a464(E)	884	#6	8'-4"	———
b450(E)	713	#5	25'-3"	———
b451(E)	214	#6	34'-0"	———
b452(E)	560	#5	28'-5"	———
d450(E)	638	#5	6'-11"	
d451(E)	322	#5	8'-9"	
d452(E)	316	#5	8'-8"	
e450(E)	8	#4	33'-2"	———
e451(E)	16	#4	23'-8"	———
e452(E)	8	#4	32'-11"	———
e453(E)	16	#4	23'-7"	———
e454(E)	96	#4	6'-11"	———
e455(E)	48	#4	7'-11"	———
e456(E)	32	#4	16'-5"	———
e457(E)	48	#4	14'-9"	———
e458(E)	32	#4	16'-4"	———
e459(E)	48	#4	14'-8"	———
v450(E)	151	#5	3'-1"	
Concrete Superstructures			CU YD	461.0
Protective Coat			SQ YD	1,792
Reinforcement Bars, Epoxy Coated			POUND	130,130
Bar Splicers			EACH	740
Bar Terminators			EACH	151
Bridge Deck Grooving (Longitudinal)			SQ YD	1,542
Diamond Grinding (Bridge Section)			SQ YD	1,568

Notes:

1. Fiberglass pipe shall conform to ASTM D2996, with short-time rupture strength hoop tensile stress of 30,000 p.s.i. minimum.
2. The exterior surfaces of the floor drains shall be painted according to Article 506 with the finish coat as specified. The exterior surfaces of the drains shall be cleaned according to the Society of Protective Coating's Spec. SSPC-SP1 prior to painting.
3. The top portion of aluminum floor drains shall be coated with 5 mils of either bitumen paint or epoxy paint to minimize reaction with wet concrete.
4. The clamping device shall be galvanized according to AASHTO M 232. Cost of clamping device included with Floor Drains.
5. The 3/16" min. aluminum sheet shall be ASTM B 209 alloy 3003-H14 and coated with 5 mils of either bitumen paint or epoxy paint to minimize reaction with wet concrete. Cost included with Concrete Superstructure.
6. The polyurethane sealant shall be according to Article 1050.04 of the Std. Spec. and the color shall be gray.
7. Bar terminators, paid for separately. See Total Bill of Material.

* Prior to Grinding
** After Grinding

MODEL: Default
FILE NAME: S:\IDL\6300-6399\6346\113\Drawings\CAD\Micros-SS4\CAD_Sheets\0160373070-62W38-025-DPD.dgn
9/25/2024 7:54:05 AM

STRAND ASSOCIATES
1170 SOUTH HOUBOLT ROAD
JOLIET, ILLINOIS 60431
(815) 744-4200
IDFPR NO. 184-001273

USER NAME = codyh	DESIGNED - DMH	REVISED -	
	CHECKED - NDR	REVISED -	
PLOT SCALE = 0:2.0000 ':" / in.	DRAWN - DMH	REVISED -	
PLOT DATE = 9/25/2024	CHECKED - TJE	REVISED -	

STATE OF ILLINOIS
DEPARTMENT OF TRANSPORTATION

DECK AND PARAPET DETAILS
STRUCTURE NO. 016-0373 (NB) AND 016-0970 (SB)

SHEET 25 OF 73 SHEETS

F.A. RTE.	SECTION	COUNTY	TOTAL SHEETS	SHEET NO.
342	(531) BR 23	COOK	1211	843

CONTRACT NO. 62W38

ILLINOIS | FED. AID PROJECT

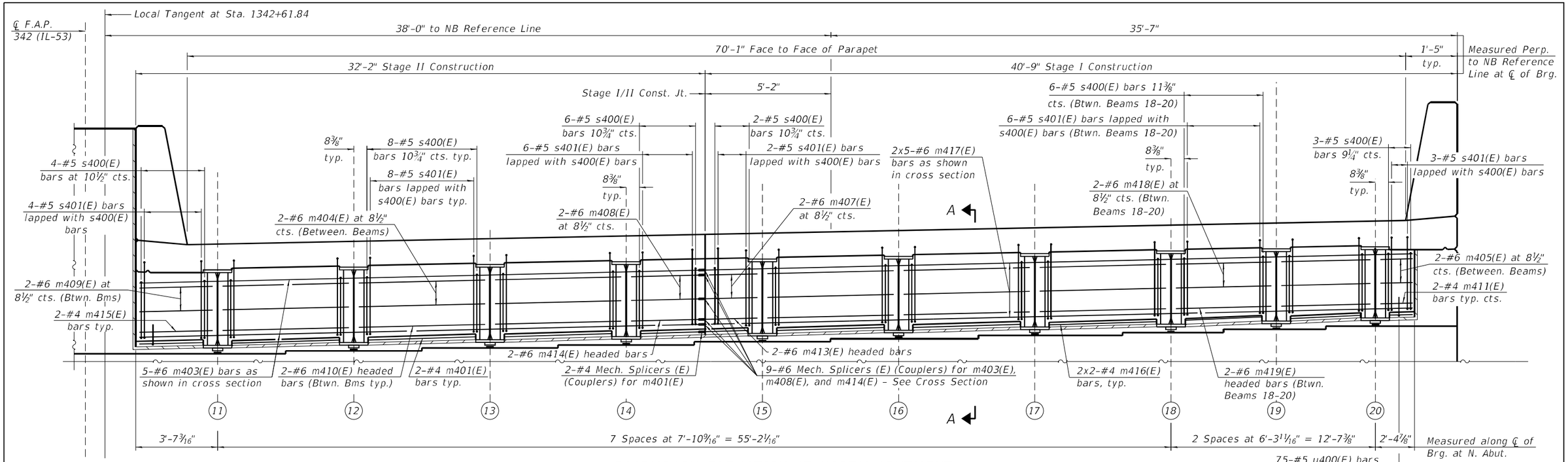

DIAPHRAGM ELEVATION AT NORTH ABUTMENT

(Looking North)

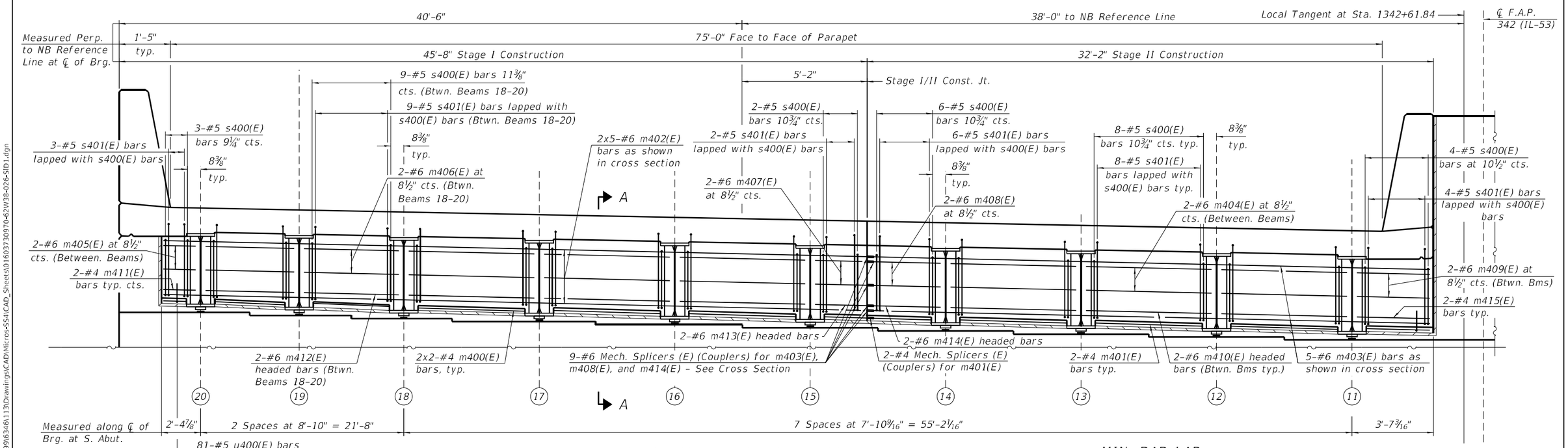

DIAPHRAGM ELEVATION AT SOUTH ABUTMENT

(Looking South)

MIN. BAR LAP

#4 bar = 2'-5"
#6 bar = 3'-7"

Notes:
1. See sheet 28 of 73 for details and sections.
2. For Offset sketch see sheet 3 of 73.

STRAND ASSOCIATES
1170 SOUTH HOUBOLT ROAD
JOLIET, ILLINOIS 60431
(815) 744-4200
IDFPR NO. 184-001273

USER NAME = codyh	DESIGNED - TJE	REVISED -	
	CHECKED - NDR	REVISED -	
PLOT SCALE = 0:2.0000 ':" / in.	DRAWN - CJH	REVISED -	
PLOT DATE = 9/25/2024	CHECKED - TJE	REVISED -	

STATE OF ILLINOIS
DEPARTMENT OF TRANSPORTATION

SEMI-INTEGRAL DIAPHRAGM (1 OF 2)
STRUCTURE NO. 016-0373 (NB)

SHEET 26 OF 73 SHEETS

F.A. RTE.	SECTION	COUNTY	TOTAL SHEETS	SHEET NO.
342	(531)BR 23	COOK	1211	844
		CONTRACT NO. 62W38		
		ILLINOIS	FED. AID PROJECT	

MODEL: Default
FILE NAME: S:\OL16300-6399\6346\113\Drawings\CAD\Micro-SSA\CAD_Sheets\0160373097D-62W38-026-SID1.dgn
9/25/2024 7:54:07 AM

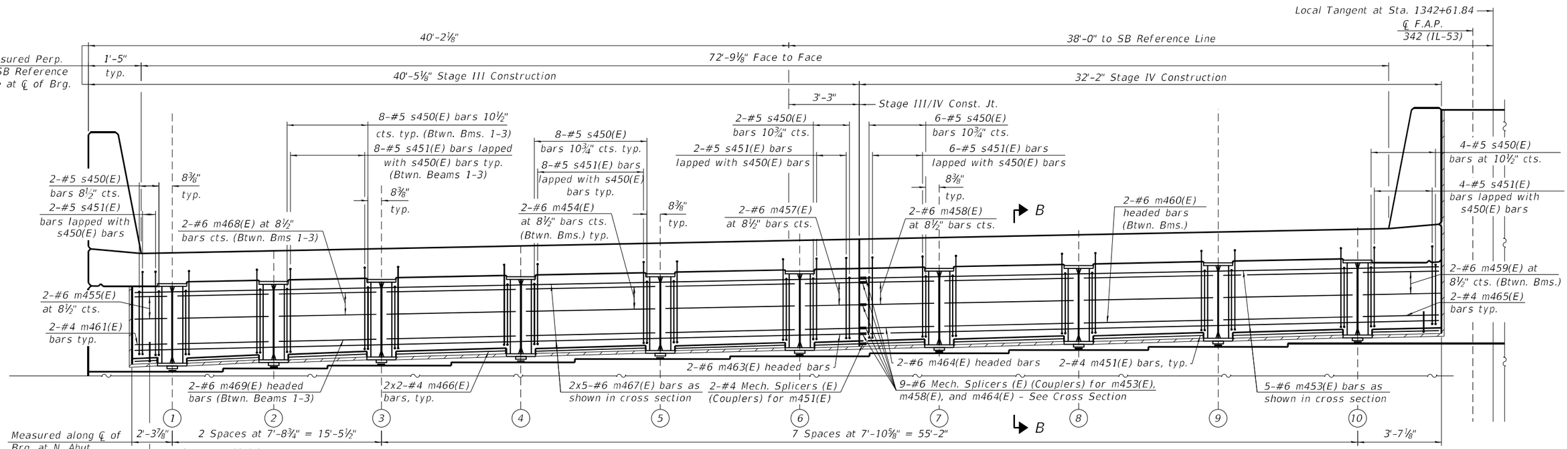

DIAPHRAGM ELEVATION AT NORTH ABUTMENT

(Looking North)

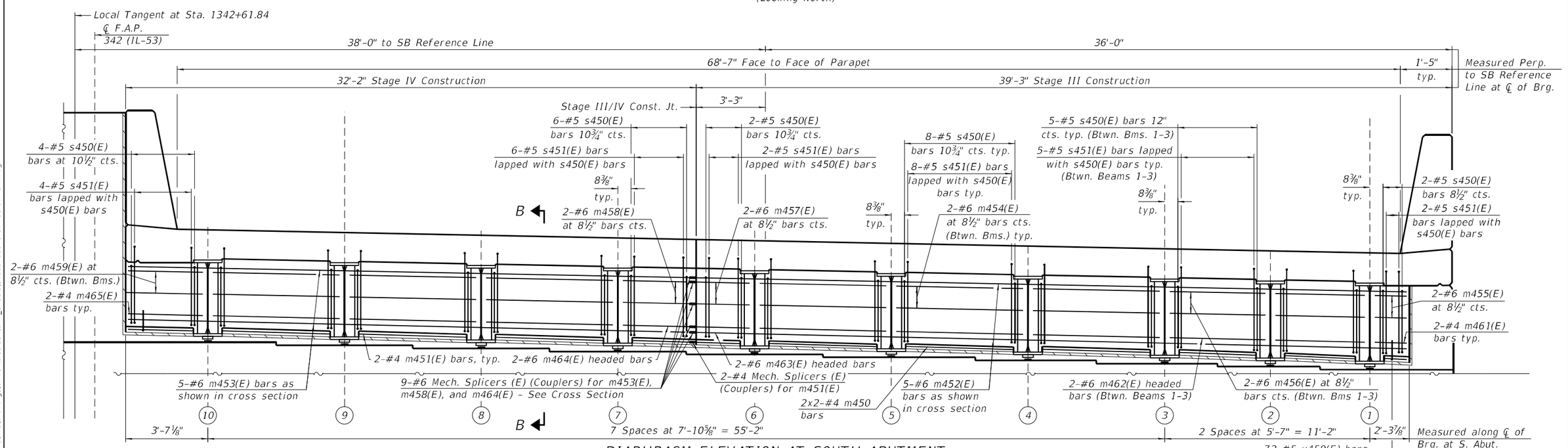

DIAPHRAGM ELEVATION AT SOUTH ABUTMENT

(Looking South)

MIN. BAR LAP

#4 bar = 2'-5"
#6 bar = 3'-7"

Notes:
1. See sheet 28 of 73 for details and sections.
2. For Offset sketch see sheet 3 of 73.

MODEL: Default
FILE NAME: S:\IDL\6300-6399\6346\113\Drawings\CAD\Micros-SSA\CAD_Sheets\0160373097O-62W38-027-SID2.dgn
9/25/2024 7:54:08 AM

STRAND ASSOCIATES
1170 SOUTH HOUBOLT ROAD
JOLIET, ILLINOIS 60431
(815) 744-4200
IDFPR NO. 184-001273

USER NAME = codyh	DESIGNED - TJE	REVISED -	
	CHECKED - NDR	REVISED -	
PLOT SCALE = 0:2.0000 ':" / in.	DRAWN - CJH	REVISED -	
PLOT DATE = 9/25/2024	CHECKED - TJE	REVISED -	

STATE OF ILLINOIS
DEPARTMENT OF TRANSPORTATION

SEMI-INTEGRAL DIAPHRAGM (2 OF 2)
STRUCTURE NO. 016-0970 (SB)

SHEET 27 OF 73 SHEETS

F.A. RTE.	SECTION	COUNTY	TOTAL SHEETS	SHEET NO.
342	(531)BR 23	COOK	1211	845
		CONTRACT NO. 62W38		
	ILLINOIS	FED. AID PROJECT		

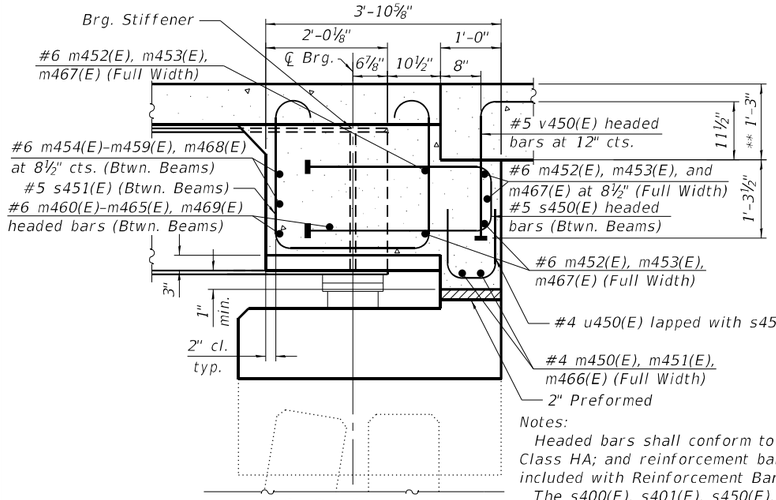

SECTION B-B

(Horiz. dim. at Rt. ∠'s to Bk. of Abut.)

Notes:

Headed bars shall conform to ASTM A970 with threaded attachment; Class HA; and reinforcement bars conforming to ASTM A706. Cost included with Reinforcement Bars, Epoxy Coated.

The s400(E), s401(E), s450(E), s456(E), u400(E), u540(E), v400(E), and v450(E) bars are placed parallel to beams and spaced at right angles to beams.

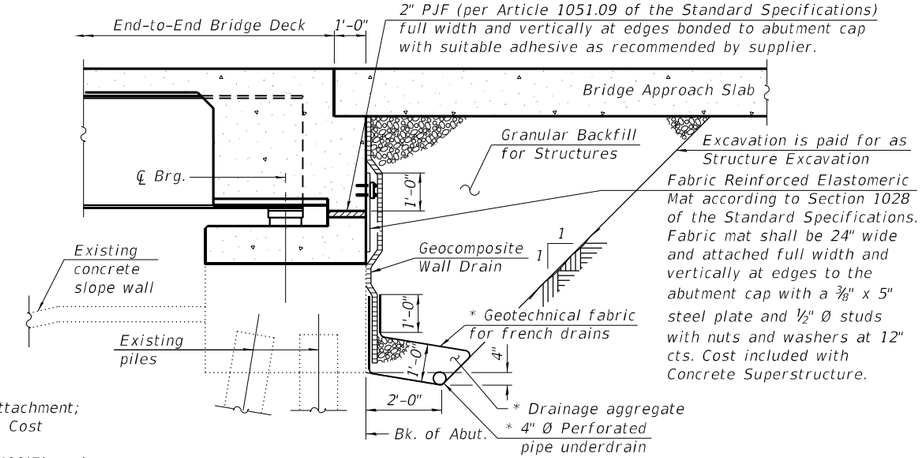

SECTION THRU SEMI-INTEGRAL ABUTMENT

(Horiz. dim. at Rt. ∠'s to Bk. of Abut.)

*Included in the cost of Pipe Underdrains for Structures.

SEMI-INTERGRAL DIAPHGRAM BILL OF MATERIALS

Structure No. 016-0375

Bar	No.	Size	Length	Shape
m400(E)	4	#4	24'-0"	
m401(E)	4	#4	32'-8"	
m402(E)	10	#6	24'-7"	
m403(E)	10	#6	32'-8"	
m404(E)	24	#6	7'-7"	
m405(E)	4	#6	2'-1"	
m406(E)	4	#6	8'-6"	
m407(E)	4	#6	1'-8"	
m408(E)	4	#6	5'-5"	
m409(E)	4	#6	3'-3"	
m410(E)	24	#6	7'-7"	
m411(E)	4	#6	2'-1"	
m412(E)	4	#6	8'-6"	
m413(E)	4	#6	1'-8"	
m414(E)	4	#6	5'-5"	
m415(E)	4	#6	3'-3"	
m416(E)	4	#4	21'-0"	
m417(E)	10	#6	21'-8"	
m418(E)	4	#6	5'-11"	
m419(E)	4	#6	5'-11"	
s400(E)	156	#5	9'-0"	
s401(E)	156	#5	7'-11"	
u400(E)	156	#4	3'-8"	
Concrete Superstructures			CU YD	43.6
Reinforcement Bars, Epoxy Coated			POUND	3,430
Bar Terminators			EACH	408
Mechanical Splicers			EACH	22
Geocomposite Wall Drain			SQ YD	197
Structure Excavation			CU YD	438
Granular Backfill for			CU YD	286
Pipe UnderDrains for Structures 4"			FOOT	178

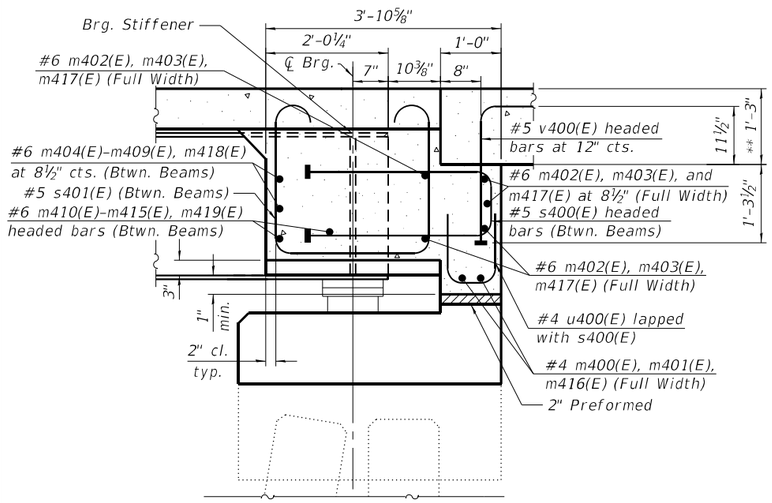

SECTION A-A

(Horiz. dim. at Rt. ∠'s to Bk. of Abut.)

BACK OF ABUTMENT ELEVATIONS

Elev.	S.N. 016-0970		S.N. 016-0373	
	S. Abut	N. Abut	S. Abut	N. Abut
A	748.08	748.47	748.69	749.22
B	750.02	750.59	750.26	750.77
C	749.73	750.34	750.44	750.92
D	751.59	752.13	752.52	752.74

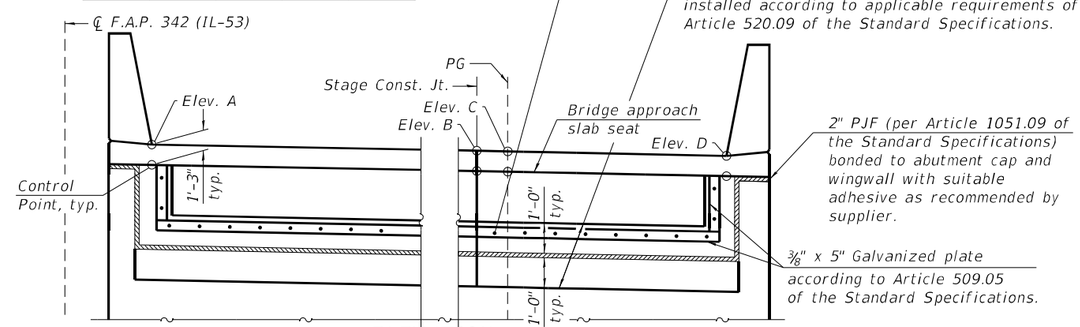

ELEVATION

(Looking at back of abutment)

Structure No. 016-1120

Bar	No.	Size	Length	Shape
m450(E)	4	#4	20'-7"	
m451(E)	4	#4	32'-8"	
m452(E)	10	#6	21'-2"	
m453(E)	10	#6	32'-8"	
m454(E)	24	#6	7'-6"	
m455(E)	4	#6	1'-11"	
m456(E)	4	#6	5'-1"	
m457(E)	4	#6	1'-8"	
m458(E)	4	#6	5'-5"	
m459(E)	4	#6	3'-3"	
m460(E)	24	#6	7'-6"	
m461(E)	4	#6	1'-11"	
m462(E)	4	#6	5'-1"	
m463(E)	4	#6	1'-8"	
m464(E)	4	#6	5'-5"	
m465(E)	4	#6	3'-3"	
m466(E)	4	#4	22'-10"	
m467(E)	10	#6	23'-4"	
m468(E)	4	#6	7'-4"	
m469(E)	4	#6	7'-4"	
s450(E)	150	#5	9'-0"	
s451(E)	150	#5	7'-11"	
u450(E)	150	#4	3'-8"	
Concrete Superstructures			CU YD	43.6
Reinforcement Bars, Epoxy Coated			POUND	3,330
Bar Terminators			EACH	396
Mechanical Splicers			EACH	22
Geocomposite Wall Drain			SQ YD	182
Structure Excavation			CU YD	386
Granular Backfill for			CU YD	260
Pipe UnderDrains for Structures 4"			FOOT	175

5'-11"	m419(E)
3'-3"	m415(E)
5'-5"	m414(E)
1'-8"	m413(E)
8'-6"	m412(E)
2'-1"	m411(E)
7'-7"	m410(E)

BAR m410(E)-m415(E), m419(E)

(Headed m410(E) - 48 Bar Terminators)
(Headed m411(E) - 8 Bar Terminators)
(Headed m412(E) - 8 Bar Terminators)
(Headed m413(E) - 8 Bar Terminators)
(Headed m414(E) - 8 Bar Terminators)
(Headed m415(E) - 8 Bar Terminators)
(Headed m419(E) - 8 Bar Terminators)

7'-4"	m469(E)
3'-3"	m465(E)
5'-5"	m464(E)
1'-8"	m463(E)
5'-1"	m462(E)
1'-11"	m461(E)
7'-6"	m460(E)

BAR m460(E)-m465(E), m469(E)

(Headed m460(E) - 48 Bar Terminators)
(Headed m461(E) - 8 Bar Terminators)
(Headed m462(E) - 8 Bar Terminators)
(Headed m463(E) - 8 Bar Terminators)
(Headed m464(E) - 8 Bar Terminators)
(Headed m465(E) - 8 Bar Terminators)
(Headed m469(E) - 8 Bar Terminators)

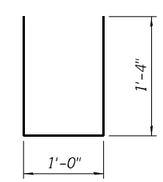

BAR u400(E), u450(E)

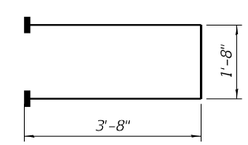

BAR s400(E), s450(E)

(Headed s400(E) - 312 Bar Terminators)
(Headed s450(E) - 300 Bar Terminators)

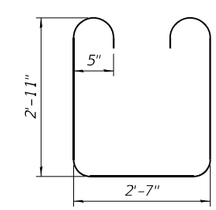

BAR s401(E), s451(E)

** After Grinding

Notes:

1. All drainage system components shall extend to 2'-0" from the end of each wingwall except an outlet pipe shall extend until intersecting with the side slopes. The pipes shall drain into concrete headwalls. (See Article 601.05 of the Standard Specifications and Highway Standard 601101).
2. The approach slab ledge shall have a constant slope determined from the control points show.
3. Cost of fabric reinforced elastomeric mat, galvanized plate, stainless steel expansion bolts with nuts and washers and installation are included in the cost of Concrete Superstructure.

TOP AND BOTTOM ELEVATIONS FOR APPROACH FOOTING

Point	Top	Bottom
A	747.15	746.32
B	748.90	748.07
C	749.04	748.21
D	751.17	750.34
E	747.06	746.23
F	748.85	748.02
G	748.97	748.14
H	751.12	750.29

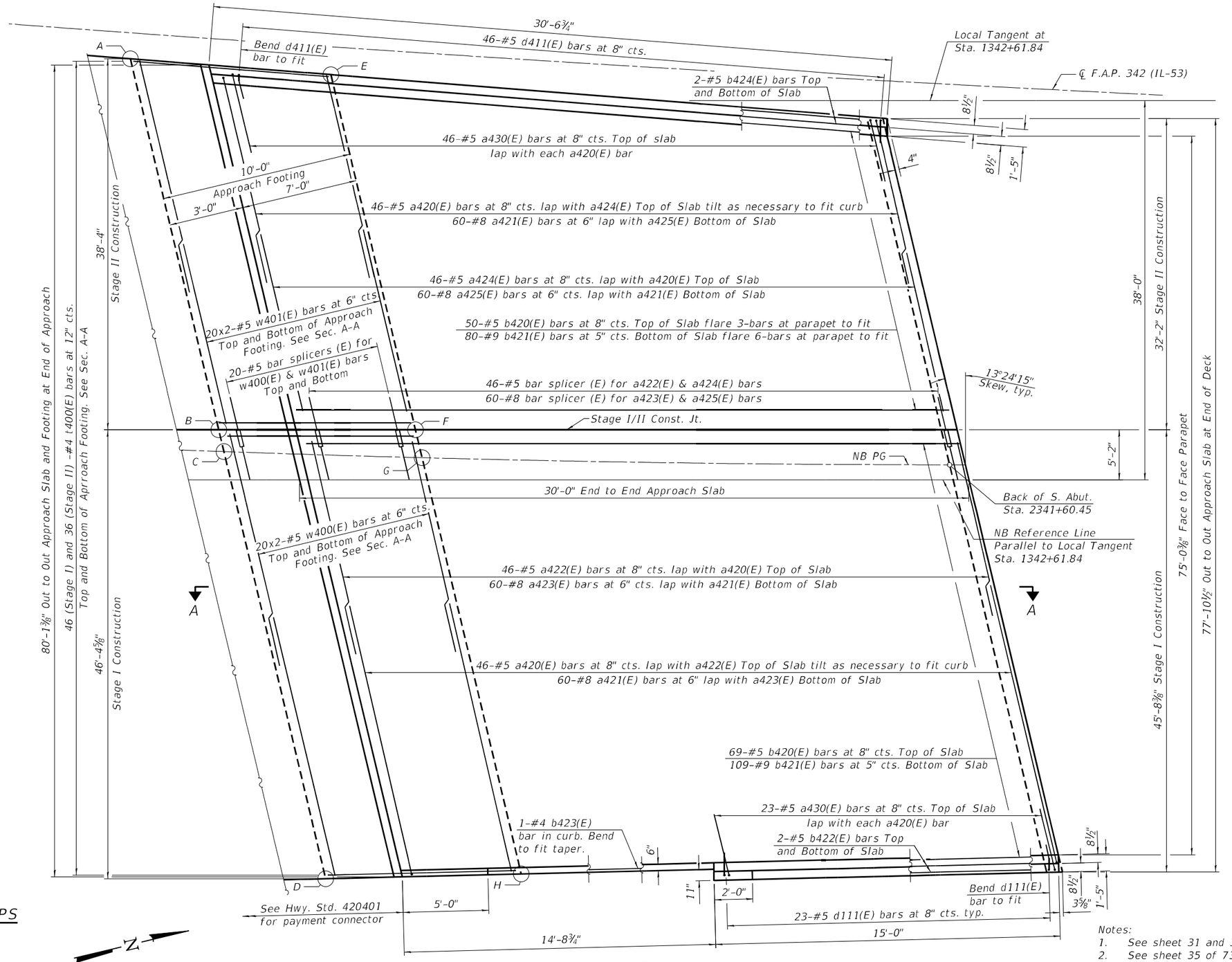

PLAN

MINIMUM BAR LAPS

#4 Bar = 2'-5"
#5 Bar = 3'-0"
#8 Bar = 4'-9"

Notes:
1. See sheet 31 and 35 of 73 for Cross Section and details.
2. See sheet 35 of 73 for Section A-A.
3. See sheet 3 of 73 for Offset Sketch
4. Bars inicated thus 20x2-#5 etc. indicates 20 lines of bars with 2 lengths per line.

MODEL: Default
FILE NAME: S:\OL\6300-6399\6346\113\Drawings\CAD\Micros-S54\CAD_Sheets\0160373097062W38-029-ASP1.dgn

STRAND ASSOCIATES
1170 SOUTH HOUBOLT ROAD
JOLIET, ILLINOIS 60431
(815) 744-4200
IDFPR NO. 184-001273

USER NAME = codyh	DESIGNED - TJE	REVISED -	
	CHECKED - NDR	REVISED -	
PLOT SCALE = 0:2.0000 ':" / in.	DRAWN - CJH	REVISED -	
PLOT DATE = 9/25/2024	CHECKED - TJE	REVISED -	

STATE OF ILLINOIS
DEPARTMENT OF TRANSPORTATION

SOUTH APPROACH SLAB PLAN (1 OF 2)
STRUCTURE NO. 016-0373 (NB)

SHEET 29 OF 73 SHEETS

F.A. RTE.	SECTION	COUNTY	TOTAL SHEETS	SHEET NO.
342	(531)BR 23	COOK	1211	847

CONTRACT NO. 62W38

ILLINOIS | FED. AID PROJECT

9/25/2024 7:54:17 AM

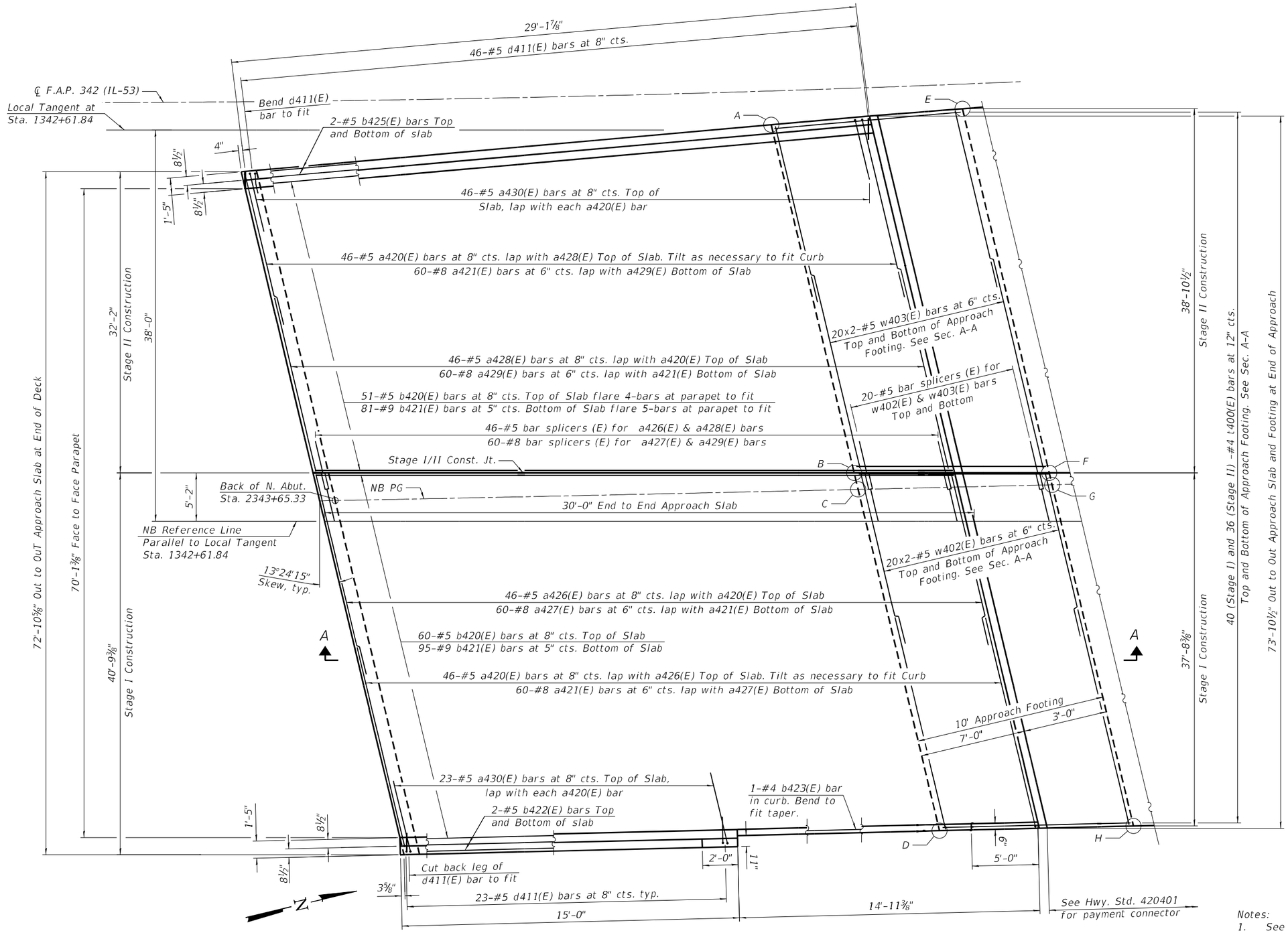

PLAN

TOP AND BOTTOM ELEVATIONS FOR APPROACH FOOTING

Point	Top	Bottom
A	747.81	746.97
B	749.52	748.69
C	749.62	748.79
D	751.45	750.61
E	747.77	746.94
F	749.53	748.69
G	749.60	748.77
H	751.42	750.59

MINIMUM BAR LAPS

#4 Bar = 2'-5"
#5 Bar = 3'-0"
#8 Bar = 4'-9"

Notes:
1. See sheet 31 and 35 of 73 for Cross Section and details.
2. See sheet 35 of 73 for Section A-A.
3. See sheet 3 of 73 for Offset Sketch
4. Bars inicated thus 20x2-#5 etc. indicates 20 lines of bars with 2 lengths per line.

MODEL: Default
FILE NAME: S:\IOL\6300-6399\6346\113\Drawings\CAD\Micros-SSA\CAD_Sheets\0160373097O-62W38-030-ASP2.dgn
9/25/2024 7:54:18 AM

STRAND ASSOCIATES®
1170 SOUTH HOUBOLT ROAD
JOLIET, ILLINOIS 60431
(815) 744-4200
IDFPR NO. 184-001273

USER NAME = codyh	DESIGNED - TJE	REVISED -	
	CHECKED - NDR	REVISED -	
PLOT SCALE = 0:2.0000 ':" / in.	DRAWN - CJH	REVISED -	
PLOT DATE = 9/25/2024	CHECKED - TJE	REVISED -	

STATE OF ILLINOIS
DEPARTMENT OF TRANSPORTATION

NORTH APPROACH SLAB PLAN (2 OF 2)
STRUCTURE NO. 016-0373 (NB)

SHEET 30 OF 73 SHEETS

F.A. RTE.	SECTION	COUNTY	TOTAL SHEETS	SHEET NO.
342	(531)BR 23	COOK	1211	848

CONTRACT NO. 62W38

ILLINOIS | FED. AID PROJECT

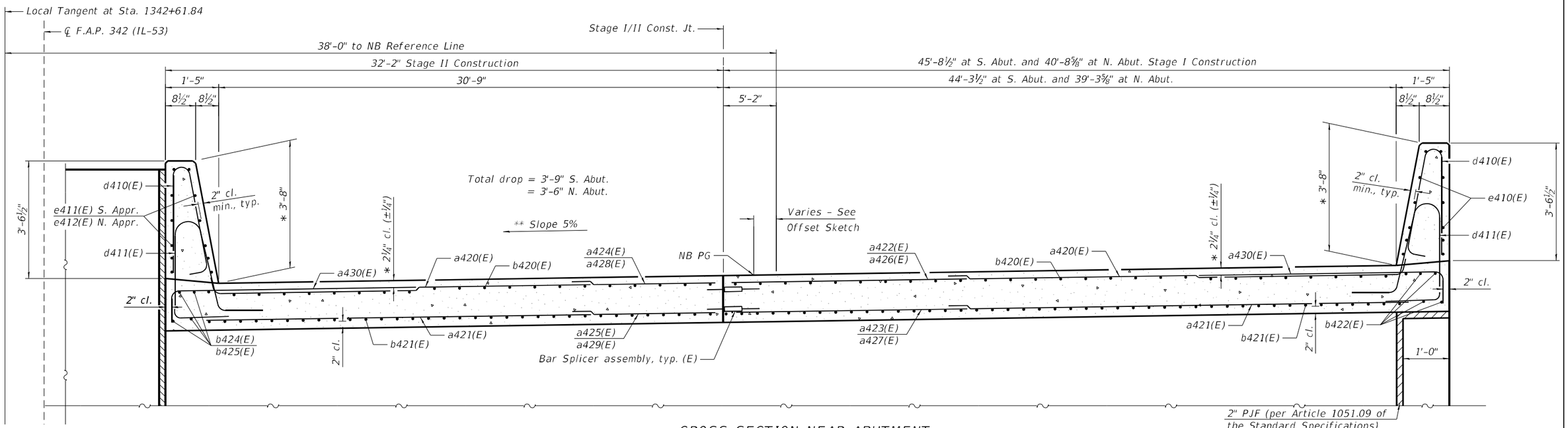

CROSS SECTION NEAR ABUTMENT

(Looking North)

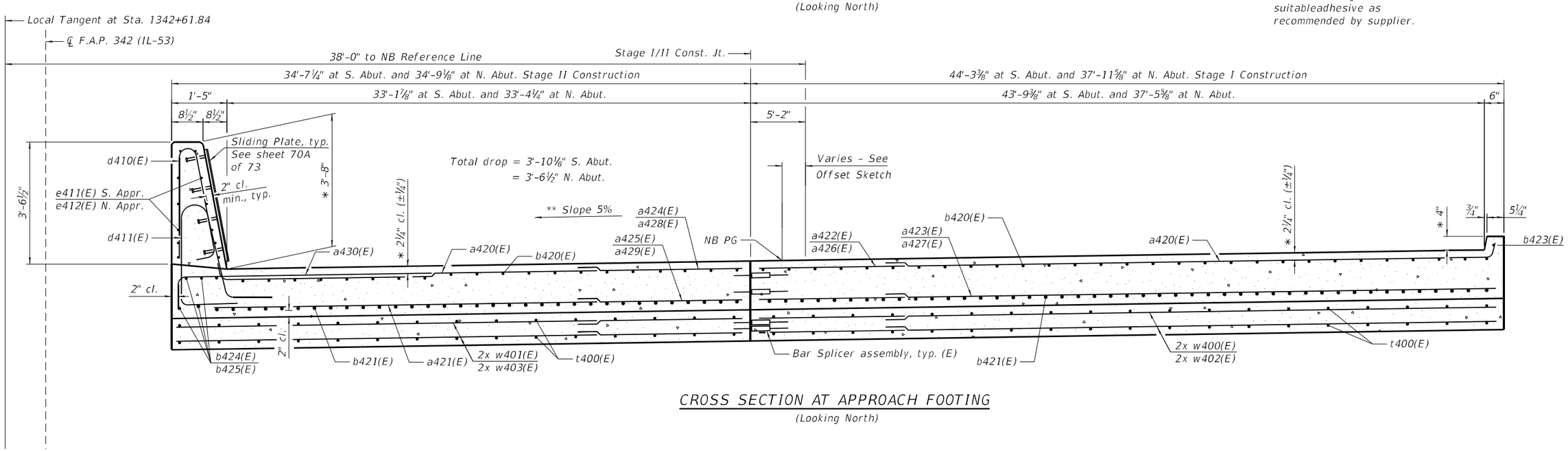

CROSS SECTION AT APPROACH FOOTING

(Looking North)

Notes:
1. See sheet 35 of 73 for details and bill of materials.
2. See sheet 3 of 73 for Offset Sketch

* After grinding
** Measured Radially

MODEL: Default
FILE NAME: S:\IOL\6300-6399\6346\113\Drawings\CAD\Micros-SS4\CAD_Sheets\0160373097062W38-031-ASCS.dgn
9/25/2024 7:54:19 AM

STRAND ASSOCIATES®
1170 SOUTH HOUBOLT ROAD
JOLIET, ILLINOIS 60431
(815) 744-4200
IDFPR NO. 184-001273

USER NAME = codyh	DESIGNED - TJE	REVISED -	
	CHECKED - NDR	REVISED -	
PLOT SCALE = 0:2.0000 ':" / in.	DRAWN - CJH	REVISED -	
PLOT DATE = 9/25/2024	CHECKED - TJE	REVISED -	

STATE OF ILLINOIS
DEPARTMENT OF TRANSPORTATION

APPROACH SLAB CROSS SECTION
STRUCTURE NO. 016-0373 (NB)

SHEET 31 OF 73 SHEETS

F.A. RTE.	SECTION	COUNTY	TOTAL SHEETS	SHEET NO.
342	(531)BR 23	COOK	1211	849
		CONTRACT NO. 62W38		
	ILLINOIS	FED. AID PROJECT		

TOP AND BOTTOM ELEVATIONS FOR APPROACH FOOTING

Point	Top	Bottom
A	746.53	745.70
B	748.32	747.49
C	748.66	747.82
D	750.24	749.41
E	746.41	745.58
F	748.25	747.41
G	748.61	747.78
H	750.17	749.34

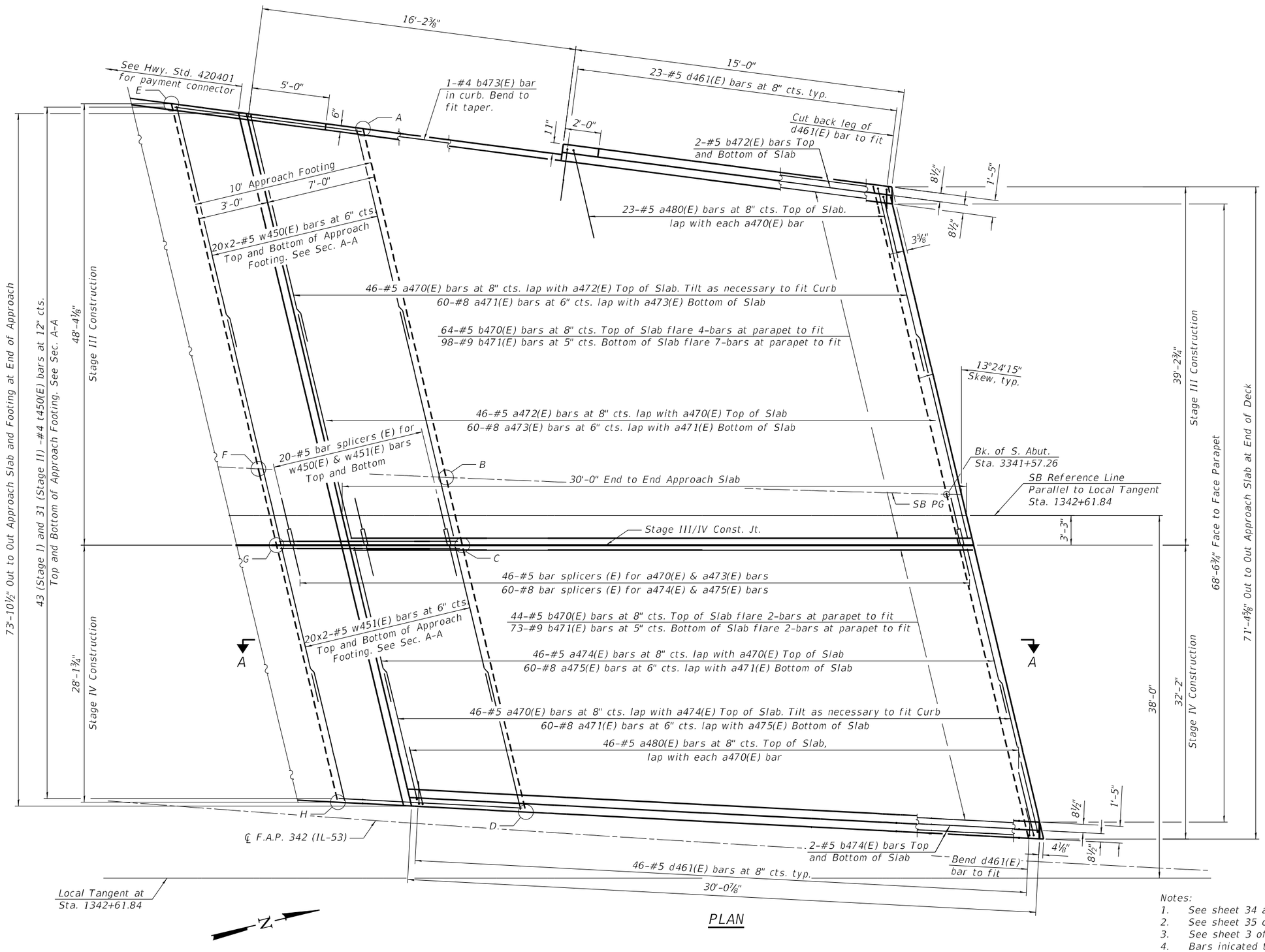

PLAN

MINIMUM BAR LAPS

#4 Bar = 2'-5"
#5 Bar = 3'-0"
#8 Bar = 4'-9"

Notes:
1. See sheet 34 and 35 of 73 for Cross Section and details.
2. See sheet 35 of 73 for Section A-A.
3. See sheet 3 of 73 for Offset Sketch.
4. Bars inicated thus 20x2-#5 etc. indicates 20 lines of bars with 2 lengths per line.

MODEL: Default
FILE NAME: S:\OL6300-6399\6346\113\Drawings\CAD\Micro-SSA\CAD_Sheets\0160370970-62W38-032-ASP1.dgn

STRAND ASSOCIATES®
1170 SOUTH HOUBOLT ROAD
JOLIET, ILLINOIS 60431
(815) 744-4200
IDFPR NO. 184-001273

USER NAME =	codyh	DESIGNED -	TJE	REVISED -	
		CHECKED -	NDR	REVISED -	
PLOT SCALE =	0:2.0000 ':" / in.	DRAWN -	CJH	REVISED -	
PLOT DATE =	9/25/2024	CHECKED -	TJE	REVISED -	

STATE OF ILLINOIS
DEPARTMENT OF TRANSPORTATION

SOUTH APRROACH SLAB PLAN
STRUCTURE NO. 016-0970 (SB)

SHEET 32 OF 73 SHEETS

F.A. RTE.	SECTION	COUNTY	TOTAL SHEETS	SHEET NO.
342	(531)BR 23	COOK	1211	850
		CONTRACT NO. 62W38		
	ILLINOIS	FED. AID PROJECT		

9/25/2024 7:54:20 AM

TOP AND BOTTOM ELEVATIONS FOR APPROACH FOOTING

Point	Top	Bottom
A	747.08	746.25
B	749.06	748.23
C	749.34	748.51
D	750.89	750.05
E	747.03	746.20
F	749.05	748.21
G	749.36	748.52
H	750.86	750.03

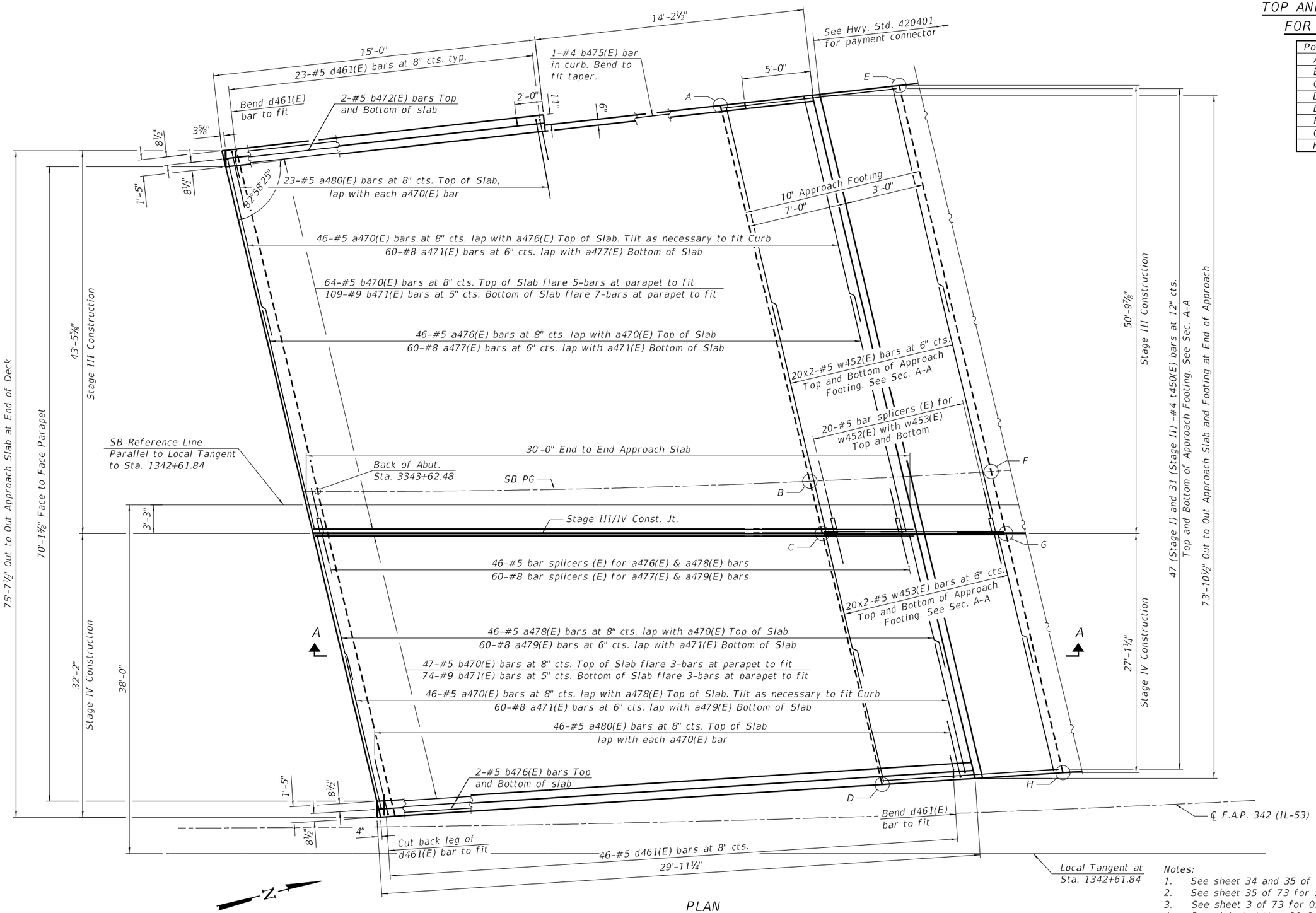

PLAN

MINIMUM BAR LAPS

#4 Bar = 2'-5"
#5 Bar = 3'-0"
#8 Bar = 4'-9"

Notes:
1. See sheet 34 and 35 of 73 for Cross Section and details.
2. See sheet 35 of 73 for Section A-A.
3. See sheet 3 of 73 for Offset Sketch
4. Bars inicated thus 20x2-#5 etc. indicates 20 lines of bars with 2 lengths per line.

STRAND ASSOCIATES
1170 SOUTH HOUBOLT ROAD
JOLIET, ILLINOIS 60431
(815) 744-4200
IDFPR NO. 184-001273

USER NAME = codyh	DESIGNED - TJE	REVISED -	
	CHECKED - NDR	REVISED -	
PLOT SCALE = 0:2.0000 ':" / in.	DRAWN - CJH	REVISED -	
PLOT DATE = 9/25/2024	CHECKED - TJE	REVISED -	

STATE OF ILLINOIS
DEPARTMENT OF TRANSPORTATION

NORTH APRROACH SLAB PLAN
STRUCTURE NO. 016-0970 (SB)

SHEET 33 OF 73 SHEETS

F.A. RTE.	SECTION	COUNTY	TOTAL SHEETS	SHEET NO.
342	(531)BR 23	COOK	1211	851

CONTRACT NO. 62W38

ILLINOIS | FED. AID PROJECT

MODEL: Default
FILE NAME: S:\IDOL\6300-6399\6346\113\Drawings\CAD\Micro-SS4\CAD_Sheets\0160970-62W38-033-ASP2.dgn
9/25/2024 7:54:22 AM

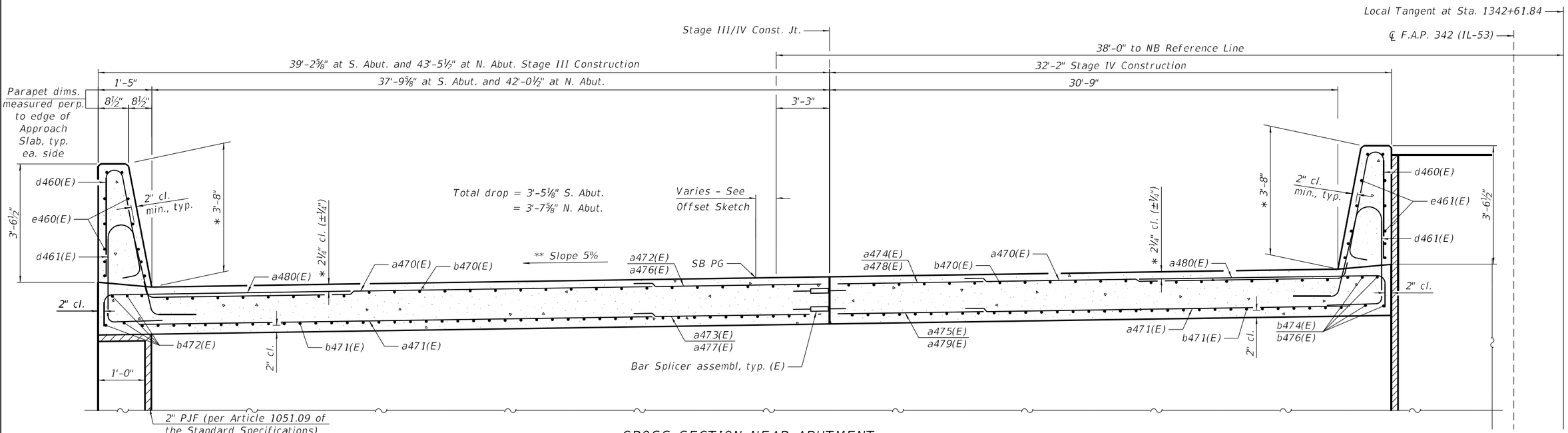

CROSS SECTION NEAR ABUTMENT

(Looking North)

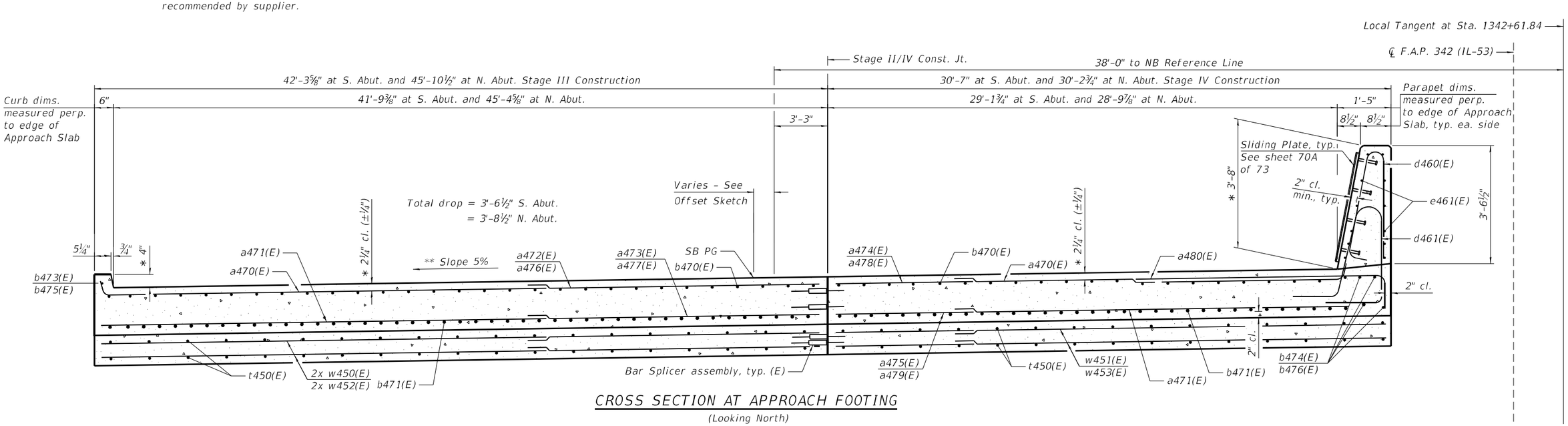

CROSS SECTION AT APPROACH FOOTING

(Looking North)

Notes:
1. See sheet 35 of 73 for details and bill of materials.
2. See sheet 3 of 73 for Offset Sketch

* After grinding
** Measured Radially

MODEL: Default
FILE NAME: S:\OL\6300--6399\6346\113\Drawings\CAD\Micros-SS4\CAD_Sheets\0160373097062W38-034-ASCS.dgn
9/25/2024 7:54:23 AM

STRAND ASSOCIATES
1170 SOUTH HOUBOLT ROAD
JOLIET, ILLINOIS 60431
(815) 744-4200
IDFPR NO. 184-001273

USER NAME = codyh	DESIGNED - TJE	REVISED -	
	CHECKED - NDR	REVISED -	
PLOT SCALE = 0:2.0000 ':" / in.	DRAWN - CJH	REVISED -	
PLOT DATE = 9/25/2024	CHECKED - TJE	REVISED -	

STATE OF ILLINOIS
DEPARTMENT OF TRANSPORTATION

APPROACH SLAB CROSS SECTION
STRUCTURE NO. 016-0970 (SB)

SHEET 34 OF 73 SHEETS

F.A. RTE.	SECTION	COUNTY	TOTAL SHEETS	SHEET NO.
342	(531)BR 23	COOK	1211	852
		CONTRACT NO. 62W38		
	ILLINOIS	FED. AID PROJECT		

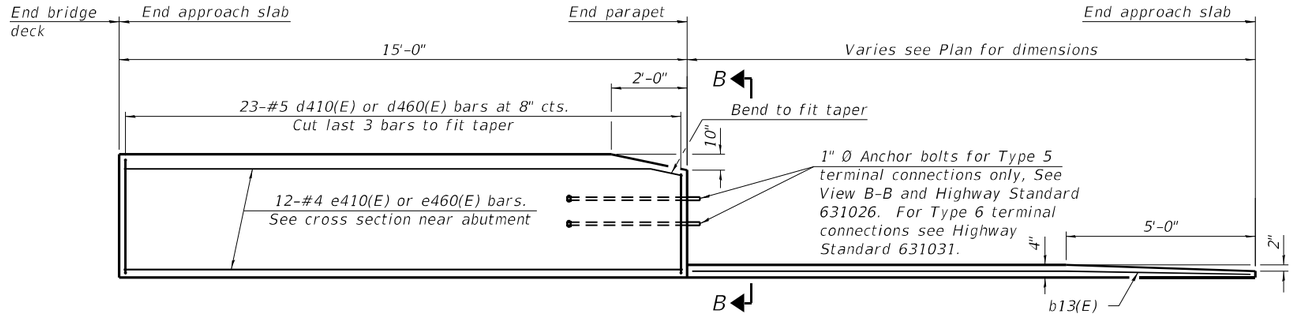

SN 016-0373 EAST & SN 016-0970 WEST INSIDE ELEVATION OF PARAPET AND CURB

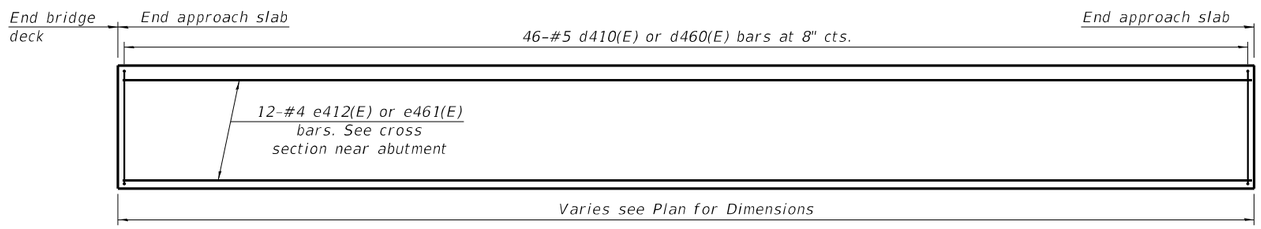

SN 016-0373 WEST & SN 016-0970 EAST INSIDE ELEVATION OF PARAPET

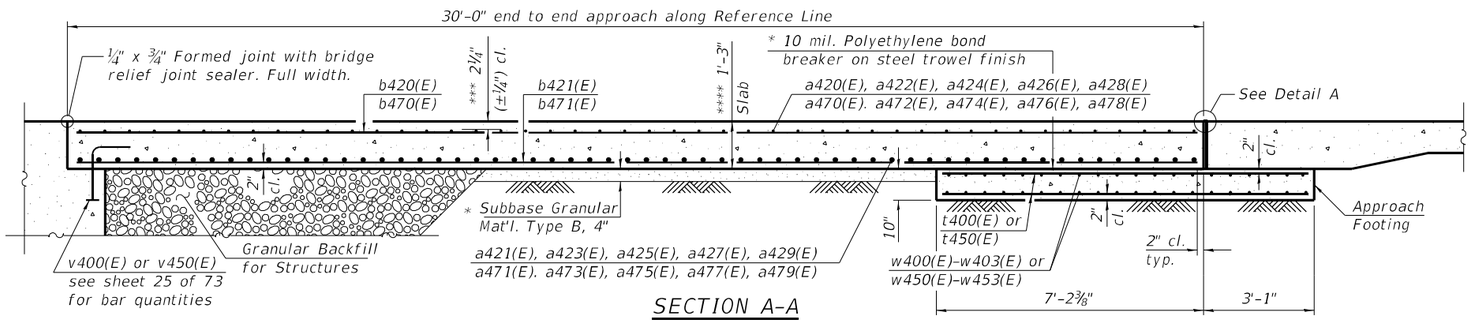

SECTION A-A

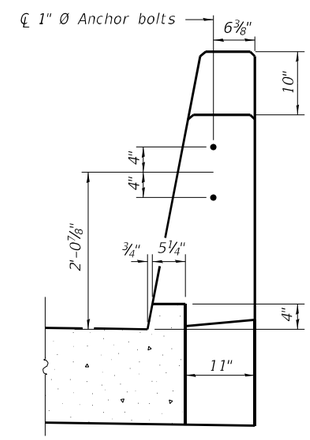

VIEW B-B

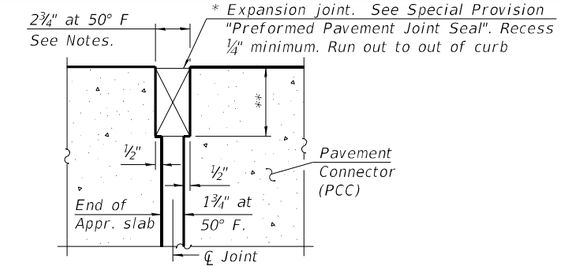

DETAIL A

(at Rt. ∠'s)

* Cost included with Concrete Superstructure (Approach Slab).
** Per manufacturer recommendations
*** Prior to Grinding
**** After Grinding

TWO APPROACHES (EACH STRUCTURE) BILL OF MATERIAL

Structure No. 016-0373 (NB)

Bar	No.	Size	Length	Shape
a420(E)	184	#5	20'-6"	
a421(E)	240	#8	20'-0"	
a422(E)	46	#5	29'-7"	
a423(E)	60	#8	31'-4"	
a424(E)	46	#5	18'-3"	
a425(E)	60	#8	20'-0"	
a426(E)	46	#5	23'-11"	
a427(E)	60	#8	25'-8"	
a428(E)	46	#5	18'-5"	
a429(E)	60	#8	20'-2"	
a430(E)	138	#5	7'-4"	
b420(E)	230	#5	29'-8"	
b421(E)	365	#9	29'-8"	
b422(E)	8	#5	14'-8"	
b423(E)	2	#4	14'-6"	
b424(E)	4	#5	30'-3"	
b425(E)	4	#5	28'-10"	
d410(E)	138	#5	7'-0"	
d411(E)	138	#5	8'-6"	
e410(E)	24	#4	14'-8"	
e411(E)	12	#4	30'-3"	
e412(E)	12	#4	28'-10"	
t400(E)	316	#4	9'-11"	
w400(E)	80	#5	24'-9"	
w401(E)	80	#5	19'-3"	
w402(E)	80	#5	21'-7"	
w403(E)	80	#5	19'-4"	
Concrete Structures			CU YD	70.1
Concrete Superstructures			CU YD	17.0
Concrete Superstructure (Approach Slab)			CU YD	215.9
Protective Coat			SQ YD	514.0
Bridge Deck Grooving			SQ YD	473
Diamond Grinding (Bridge Section)			SQ YD	479
Reinforcement Bars, Epoxy Coated			POUND	94,150
Bar Splicers			EACH	292

Structure No. 016-0970 (SB)

Bar	No.	Size	Length	Shape
a470(E)	184	#5	20'-6"	
a471(E)	240	#8	20'-0"	
a472(E)	46	#5	26'-3"	
a473(E)	60	#8	28'-0"	
a474(E)	46	#5	15'-8"	
a475(E)	60	#8	17'-5"	
a476(E)	46	#5	30'-9"	
a477(E)	60	#8	32'-6"	
a478(E)	46	#5	16'-9"	
a479(E)	60	#8	18'-6"	
a480(E)	138	#5	7'-4"	
b470(E)	224	#5	29'-8"	
b471(E)	354	#9	29'-8"	
b472(E)	8	#5	14'-8"	
b473(E)	1	#4	15'-10"	
b474(E)	4	#5	29'-8"	
b475(E)	1	#4	13'-10"	
b476(E)	4	#5	29'-7"	
d460(E)	138	#5	7'-0"	
d461(E)	138	#5	8'-6"	
e460(E)	24	#4	14'-8"	
e461(E)	24	#4	29'-8"	
t450(E)	304	#4	9'-11"	
w450(E)	80	#5	23'-4"	
w451(E)	80	#5	17'-3"	
w452(E)	80	#5	25'-0"	
w453(E)	80	#5	17'-1"	
Concrete Structures			CU YD	67.8
Concrete Superstructures			CU YD	17.0
Concrete Superstructure (Approach Slab)			CU YD	203.8
Protective Coat			SQ YD	537.0
Bridge Deck Grooving			SQ YD	468
Diamond Grinding (Bridge Section)			SQ YD	474
Reinforcement Bars, Epoxy Coated			POUND	92,230
Bar Splicers			EACH	292

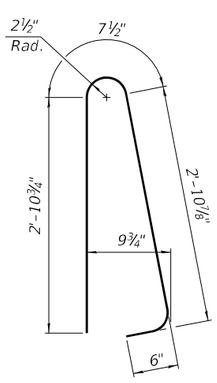

BAR d410(E), d460(E)

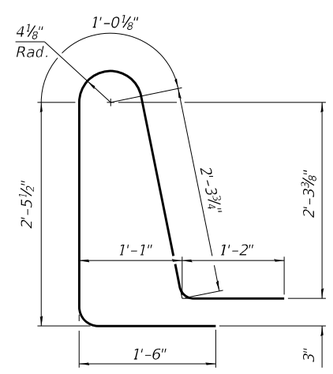

BAR d411(E), a461(E)

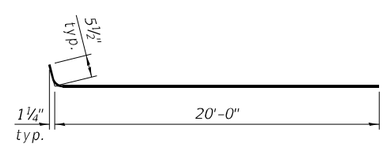

BAR a420(E), a470(E))

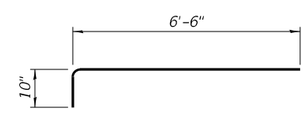

BAR a430(E), a480(E)

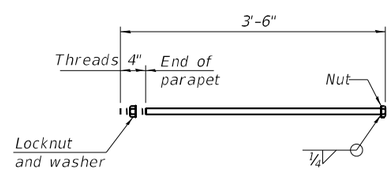

*1" Ø ANCHOR BOLT

(Anchor bolt assemblies shall be galvanized according to Article 1006.09 of the Standard Specifications)

Notes:

1. The joint opening shall be adjusted for temperature per Article 520.04 of the Standard Specifications. However, since this detail is for jointless structures, the length of bridge used to calculate the adjustment shall be equal to half the total bridge length plus the length of the bridge approach slab.
2. Parapet concrete shall be paid for as Concrete Superstructure.
3. Approach slab shall be paid for as Concrete Superstructure (Approach Slab).
4. Approach footing concrete shall be paid for as Concrete Structures.
5. The approach footing maximum applied service bearing pressure (Qmax) = 2.0 ksf.
6. Cost of excavation for approach footing included with Concrete Structures.
7. For Granular Backfill for Structures and drainage treatment details, see sheet 28 of 73.

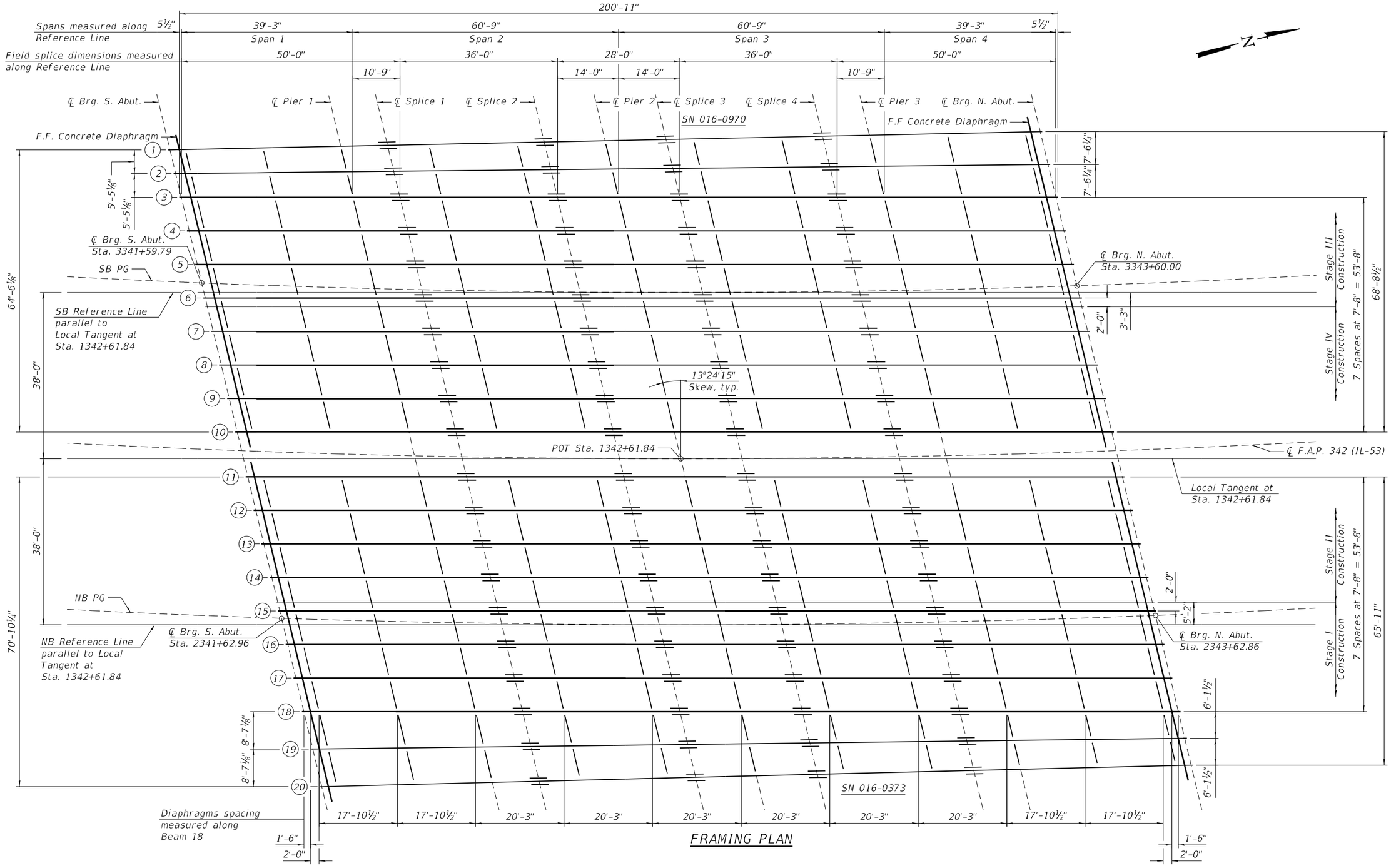

FRAMING PLAN

Notes:
1. Work this sheet with sheets 37 thru 39 of 73.
2. For Layout Sketch, see sheet 3 of 73.

MODEL: Default
FILE NAME: S:\IOL\6300-6399\6246\113\Drawings\CAD\Micro-SS4\CAD_Sheets\0160373097b-62W38-036-FP.dgn
9/25/2024 7:54:32 AM

STRAND ASSOCIATES®
1170 SOUTH HOUBOLT ROAD
JOLIET, ILLINOIS 60431
(815) 744-4200
IDFPR NO. 184-001273

USER NAME = codyh	DESIGNED - TJE	REVISED -	
	CHECKED - NDR	REVISED -	
PLOT SCALE = 0:2.0000 ':" / in.	DRAWN - CJH	REVISED -	
PLOT DATE = 9/25/2024	CHECKED - TJE	REVISED -	

STATE OF ILLINOIS
DEPARTMENT OF TRANSPORTATION

FRAMING PLAN
STRUCTURE NO. 016-0373 (NB) AND 016-0970 (SB)

SHEET 36 OF 73 SHEETS

F.A. RTE.	SECTION	COUNTY	TOTAL SHEETS	SHEET NO.
342	(531) BR 23	COOK	1211	854
		CONTRACT NO. 62W38		
		ILLINOIS	FED. AID PROJECT	

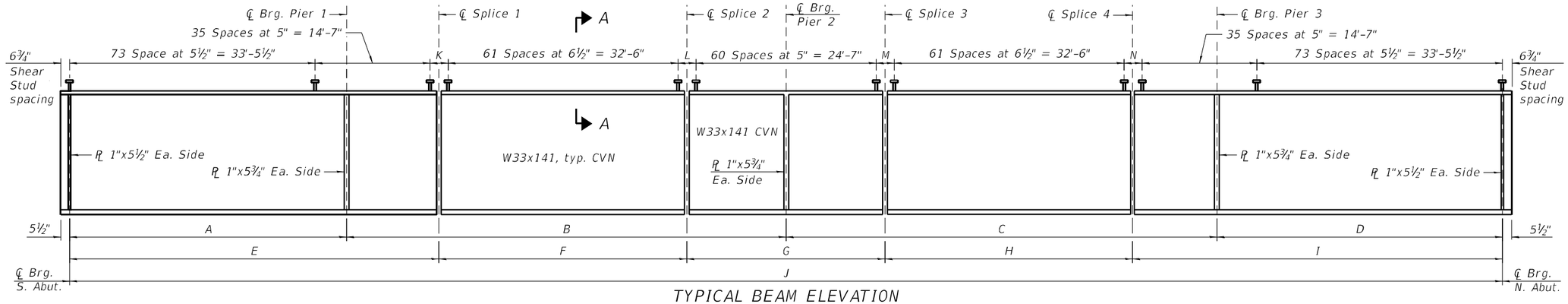

TYPICAL BEAM ELEVATION

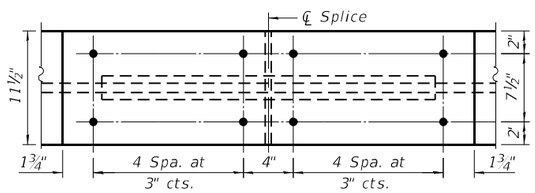

TOP FLANGE

Girder	A	B	C	D	E	F	G	H	I	J	K	L	M	N
1	39'-0 3/4"	60'-5 1/2"	60'-5 1/2"	39'-0 3/4"	49'-9 1/8"	35'-10"	27'-10 3/8"	35'-9 3/8"	49'-9 3/4"	199'-0 5/8"	3'-3 1/2"	3'-3 1/2"	3'-3 1/2"	3'-3 5/8"
2	39'-1 13/16"	60'-7 3/16"	60'-7 3/16"	39'-1 13/16"	49'-10 1/2"	35'-11"	27'-11 1/8"	35'-11"	49'-10 1/2"	199'-6 1/8"	3'-5 1/2"	3'-3 1/2"	3'-7"	3'-3 3/4"
3-18	39'-3"	60'-9"	60'-9"	39'-3"	50'-0"	36'-0"	28'-0"	36'-0"	50'-0"	200'-0"	3'-7 1/4"	3'-5 1/2"	3'-5 1/2"	3'-7 1/4"
19	39'-1 5/8"	60'-6 15/16"	60'-6 15/16"	39'-1 5/8"	49'-10 1/4"	35'-10 3/4"	27'-11"	35'-10 3/4"	49'-10 1/4"	199'-5 1/8"	3'-3 1/2"	3'-5 3/4"	3'-5 3/4"	3'-3 5/8"
20	39'-0 3/8"	60'-4 15/16"	60'-4 15/16"	39'-0 3/8"	49'-8 5/8"	35'-9 5/8"	27'-10 1/8"	35'-9 5/8"	49'-8 5/8"	198'-10 5/8"	3'-3 1/2"	3'-3 1/2"	3'-3 1/2"	3'-1 3/4"

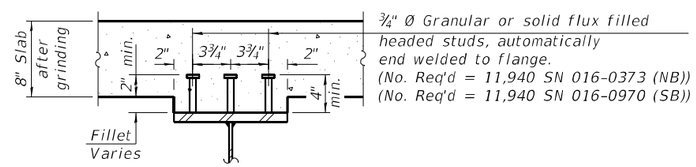

SECTION A-A

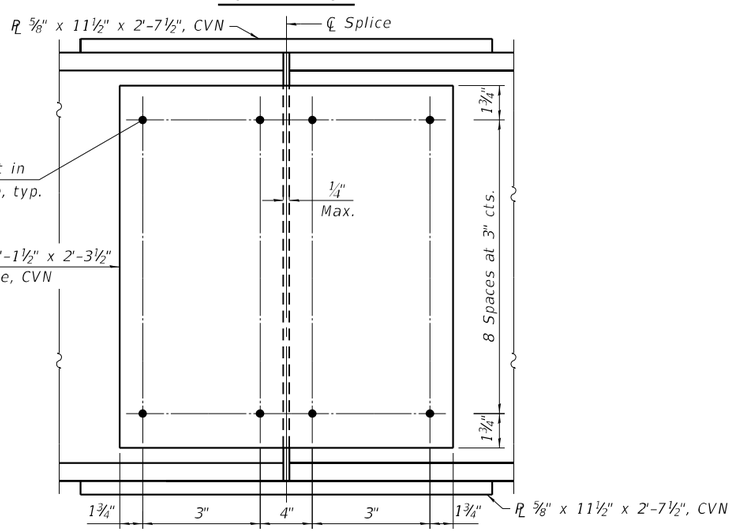

WEB SPLICE

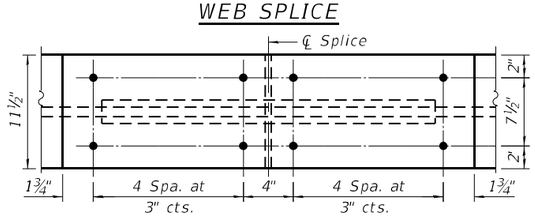

BOTTOM FLANGE

(Typical Field Splice)

TOP OF FLANGE ELEVATIONS

	BEAM No.	CL BRG. S. ABUT.	CL BRG. PIER 1	CL Field Splice 1	CL Field Splice 2	CL BRG. PIER 2	CL Field Splice 3	CL Field Splice 4	CL BRG. PIER 3	CL BRG. N. ABUT.
SN 016-0970	1	747.4	747.5	747.5	747.6	747.6	747.7	747.7	747.7	747.8
	2	747.7	747.8	747.8	747.9	748.0	748.0	748.1	748.1	748.2
	3	748.0	748.1	748.1	748.3	748.3	748.3	748.4	748.5	748.6
	4	748.4	748.5	748.5	748.6	748.7	748.7	748.8	748.8	749.0
	5	748.8	748.9	748.9	749.0	749.1	749.1	749.2	749.2	749.3
	6	749.2	749.2	749.3	749.4	749.5	749.5	749.6	749.6	749.7
	7	749.6	749.6	749.7	749.8	749.8	749.9	750.0	750.0	750.1
	8	750.0	750.0	750.1	750.2	750.2	750.3	750.4	750.4	750.5
	9	750.4	750.4	750.5	750.6	750.6	750.7	750.8	750.8	750.9
	10	750.7	750.8	750.9	751.0	751.0	751.1	751.1	751.2	751.3
SN 016-0373	11	748.0	748.1	748.2	748.3	748.3	748.4	748.4	748.5	748.6
	12	748.4	748.5	748.6	748.7	748.7	748.8	748.8	748.9	749.0
	13	748.8	748.9	749.0	749.1	749.1	749.1	749.2	749.2	749.3
	14	749.2	749.3	749.4	749.5	749.5	749.5	749.6	749.6	749.7
	15	749.6	749.7	749.7	749.8	749.9	749.9	750.0	750.0	750.1
	16	750.0	750.1	750.1	750.2	750.3	750.3	750.4	750.4	750.5
	17	750.4	750.5	750.5	750.6	750.6	750.7	750.8	750.8	750.9
	18	750.8	750.8	750.9	751.0	751.0	751.1	751.2	751.2	751.3
	19	751.2	751.3	751.3	751.4	751.4	751.4	751.5	751.5	751.6
	20	751.7	751.7	751.7	751.7	751.8	751.8	751.8	751.8	751.9

Notes:
1. Load carrying components designated "CVN" shall conform to the Charpy-V-Notch Impact Energy Requirements, Zone 2.
2. All beams and splice plates shall be AASHTO M270 Grade 50.

S.N. 016-0376 (NB)

INTERIOR BEAM MOMENT TABLE					
		0.4 Sp. 1 0.6 SP. 4	PIER 1 PIER 3	0.5 Sp. 2 0.5 Sp. 3	PIER 2
I_s	(in4)	7,450	7,450	7,450	7,450
$I_c(n)$	(in4)	24,136	24,136	24,136	24,136
$I_c(3n)$	(in4)	18,133	18,133	18,133	18,133
$I_c(cr)$	(in4)	———	10,643	———	10,643
S_s	(in3)	448	448	448	448
$S_c(n)$	(in3)	729	———	729	———
$S_c(3n)$	(in3)	667	———	667	———
$S_c(cr)$	(in3)	———	724	———	724
S_x	(in3)	729	729	729	729
DC1	(k/')	1.00	1.00	1.00	1.00
M_{DC1}	('k)	87	249	165	326
DC2	(k/')	0.11	0.11	0.11	0.11
M_{DC2}	('k)	10	30	20	39
DW	(k/')	0.36	0.36	0.36	0.36
M_{DW}	('k)	32	98	65	127
LLDF		0.70	0.62	0.62	0.62
M_{LL+IM}	('k)	414	520	506	562
f_f (Strength I)	(ksi)	———	———	———	———
Mu + 1/3 f_fSx	('k)	893	1,406	1,213	1,630
$\phi_f M_n$	('k)	3,750	———	3,438	———
f_s DC1	(ksi)	749.50	6.68	4.42	8.72
f_s DC2	(ksi)	0.17	0.49	0.35	0.65
f_s DW	(ksi)	0.58	1.63	1.16	2.11
f_s (LL + IM)	(ksi)	6.81	8.62	8.33	9.31
f_f (Service II)	(ksi)	———	———	———	———
f_s+f_f/2 (Service II)	(ksi)	759.10	20.00	16.76	23.58
Service II Resistance	(ksi)	47.50	47.50	47.50	47.50
f_s+f_f/3 (Total)(Strength I)	(ksi)	949.87	26.49	22.29	31.17
$\phi_f F_n$	(ksi)	———	50	———	50
V_f	(k)	38	51	38	60

S.N. 016-0970 (SB)

INTERIOR BEAM MOMENT TABLE					
		0.4 Sp. 1 0.6 SP. 4	PIER 1 PIER 3	0.5 Sp. 2 0.5 Sp. 3	PIER 2
I_s	(in4)	7,450	7,450	7,450	7,450
$I_c(n)$	(in4)	24,136	24,136	24,136	24,136
$I_c(3n)$	(in4)	18,133	18,133	18,133	18,133
$I_c(cr)$	(in4)	———	10,643	———	10,643
S_s	(in3)	448	448	448	448
$S_c(n)$	(in3)	729	———	729	———
$S_c(3n)$	(in3)	667	———	667	———
$S_c(cr)$	(in3)	———	724	———	724
S_x	(in3)	729	729	729	729
DC1	(k/')	1.09	1.09	1.09	1.09
M_{DC1}	('k)	85	259	171	336
DC2	(k/')	0.12	0.12	0.12	0.12
M_{DC2}	('k)	10	30	20	39
DW	(k/')	0.36	0.36	0.36	0.36
M_{DW}	('k)	30	92	61	121
LLDF		0.70	0.62	0.62	0.62
M_{LL+IM}	('k)	417	522	461	568
f_f (Strength I)	(ksi)	———	———	———	———
Mu + 1/3 f_fSx	('k)	892	1,413	1,137	1,645
$\phi_f M_n$	('k)	3,749	———	3,434	———
f_s DC1	(ksi)	2.27	6.94	4.58	9.01
f_s DC2	(ksi)	0.17	0.50	0.36	0.65
f_s DW	(ksi)	0.54	1.53	1.10	2.00
f_s (LL + IM)	(ksi)	6.86	8.64	7.59	9.41
f_f (Service II)	(ksi)	———	———	———	———
f_s+f_f/2 (Service II)	(ksi)	11.90	20.20	15.91	23.90
Service II Resistance	(ksi)	47.50	47.50	47.50	47.50
f_s+f_f/3 (Total)(Strength I)	(ksi)	15.87	26.71	21.11	31.55
$\phi_f F_n$	(ksi)	———	50	———	50
V_f	(k)	41	50	44	52

S.N. 016-0376 (NB)

INTERIOR BEAM REACTION TABLE				
		ABUTMENT	PIER 1 PIER 3	PIER 2
LLDF		0.79	0.79	0.79
OCF		1.05	———	———
R_{DC1}	(k)	39.2	54.1	61.8
R_{DC2}	(k)	1.7	6.5	7.5
R_{DW}	(k)	5.1	21.4	24.2
R_{LL}	(k)	55.3	106.2	109.2
R_{IM}	(k)	14.8	24.3	24.2
R_{Total} (Strength I + Impact)	(k)	181.5	336.2	356.4
R_{Total} (Strength I)	(k)	155.6	293.7	314.0

S.N. 016-0970 (SB)

INTERIOR BEAM REACTION TABLE				
		ABUTMENT	PIER 1 PIER 3	PIER 2
LLDF		0.791	0.791	0.791
OCF		1.050	———	———
R_{DC1}	(k)	49.6	55.9	63.6
R_{DC2}	(k)	1.6	6.5	7.5
R_{DW}	(k)	5.0	20.0	22.9
R_{LL}	(k)	53.6	105.3	110.0
R_{IM}	(k)	14.4	24.0	24.4
R_{Total} (Strength I + Impact)	(k)	190.5	334.3	358.4
R_{Total} (Strength I)	(k)	165.3	292.3	315.7

I_s, S_s: Non-composite moment of inertia and section modulus of the steel section used for computing fs (Total-Strength I, and Service II) due to non-composite dead loads (in.^{4} and in.^{3}).

$I_c(n)$, $S_c(n)$: Composite moment of inertia and section modulus of the steel and deck based upon the modular ratio, "n", used for computing fs (Total-Strength I, and Service II) in uncracked sections due to short-term composite live loads dead loads (in.^{4} and in.^{3}).

$I_c(3n)$, $S_c(3n)$: Composite moment of inertia and section modulus of the steel and deck based upon 3 times the modular ratio, "3n", used for computing fs (Total-Strength I, and Service II) in uncracked sections, due to long-term composite (superimposed)

$I_c(cr)$, $S_c(cr)$: Composite moment of inertia and section modulus of the steel and longitudinal deck reinforcement, used for computing fs (Total-Strength I and Service II) in cracked sections, due to both short-term composite live loads and long-term composite (superimposed) dead loads (in.^{4} and in.^{3}).

S_x: Section modulus about the major axis of a section to the controlling flange, tension or compression, taken as yield moment with respect to the controlling flange over the yield strength of the controlling flange (in.^{3}).

DC1: Un-factored non-composite dead load (kips/ft.).

M_{DC1}: Un-factored moment due to non-composite dead load (kip-ft.).

DC2: Un-factored long-term composite (superimposed excluding future wearing surface) dead load (kips/ft.).

M_{DC2}: Un-factored moment due to long-term composite (superimposed excluding future wearing surface) dead load (kip-ft.).

DW: Un-factored long-term composite (superimposed future wearing surface only) dead load (kips/ft.).

M_{DW}: Un-factored moment due to long-term composite (superimposed future wearing surface only) dead load (kip-ft.).

LLDF: Live Load Distribution Factor for moment and shear computed according to Article 4.6.2.2 and further IDOT provisions.

M_{LL+IM}: Un-factored live load moment plus dynamic load allowance (impact) (kip-ft.).

M_u: Strength I load combination of factored design moments (kip-ft.).
$1.25\ (M_{DC1} + M_{DC2}) + 1.5\ M_{DW} + 1.75\ M_{LL+IM}$

f_f: Factored calculated flange lateral bending stress as calculated using Article 6.10.1.6 and as further simplified by IDOT provisions (ksi).

$\Phi_f M_n$: Factored nominal flexural resistance of the section determined as specified in Article 6.10.7.1 or A6 as applicable (kip-ft.).

f_sDC1: Un-factored stress at edge of flange for controlling steel flange due to vetrical non-composite dead loads as calculated below (ksi).
M_{DC1} / S_s

fs DC2: Un-factored stress at edge of flange for controlling steel flange due to vertical composite dead loads as calculated below (ksi).
M_{DC2} / S_c (3n) or M_{DC2} / S_c (cr) as applicable.

f_s DW: Un-factored stress at edge of flange for controlling steel flange due to vertical composite future wearing surface loads as calculated below (ksi).
M_{DW} / S_c (3n) or M_{DW} / S_c (cr) as applicable.

f_s ($_{LL}$+ IM): Un-factored stress at edge of flange for controlling steel flange due to vertical composite live load plus impact loads as calculated below (ksi).
M_{LL+IM} / S_c (n) or M_{LL+IM} / S_c (cr) as applicable.

f_s + f_f / 2 (Service II): Sum of stresses as computed below (ksi).
f_s DC1 + f_s DC2 + f_s DW + 1.3 f_s (+ IM) + f_f /2

Service II Resistance: Composite ($0.95R_hF_{yf}$) or noncomposite ($0.80R_hF_{yf}$) stress capacity according to Article 6.10.4.2 (ksi).

f_s + f_f / 3 (Strength I): Sum of stresses as computed below on non-compact sections (ksi).
1.25 (f_s DC1 + f_s DC2) + 1.5 f_s DW + 1.75 f_s ($_{LL}$+ IM) + f_f /3

$\Phi_f F_n$: Factored nominal flexural resistance of the section as specified in Article 6.10.7.2 or 6.10.8 as applicable (ksi).

Vf: Maximum factored shear range in span computed according to Article 6.10.10.

OCF: Obtuse Correction Factor according to Article 4.6.2.2.3c or as further simplified by IDOT provisions.

R_{DC1}: Un-factored reaction due to non-composite dead load (kip).

R_{DC2}: Un-factored reaction due to long-term composite (superimposed excluding future wearing surface) dead load (kip).

R_{DW}: Un-factored reaction due to long-term composite (superimposed future wearing surface only) dead load (kip).

R_{LL}: Un-factored live load reaction (kip).

R_{IM}: Un-factored dynamic load allowance (impact) (kip).

R_{Total} (Strength I)(Impact): Strength I load combination of factored design reactions (kip).
1.25 (RDC1 + RDC2) + 1.5RDW + 1.75 (R_{LL} + RIM)

R_{Total} (Strength I)(No Impact): Strength I load combination of factored design reactions, not including dynamic load allowance (Impact) (kip).
1.25 (R_{DC1} + R_{DC2}) + 1.5R_{DW} + 1.75 (R_{LL})

Note:
M_{LL} and R_{LL} include the effects of centrifugal force and superelevation.

MODEL: Default
FILE NAME: S:\OL\6300--6399\6346\113\Drawings\CAD\Micro-SSA\CAD_Sheets\0160373097O-62W38-038-INRT.dgn

STRAND ASSOCIATES®
1170 SOUTH HOUBOLT ROAD
JOLIET, ILLINOIS 60431
(815) 744-4200
IDFPR NO. 184-001273

USER NAME = codyh	DESIGNED - TJE	REVISED -	
	CHECKED - NDR	REVISED -	
PLOT SCALE = 0:2.0000 ':" / in.	DRAWN - CJH	REVISED -	
PLOT DATE = 9/25/2024	CHECKED - TJE	REVISED -	

STATE OF ILLINOIS
DEPARTMENT OF TRANSPORTATION

INTERIOR MOMENT AND REACTION TABLES
STRUCTURE NO. 016-0373 (NB) AND 016-0970 (SB)

SHEET 38 OF 73 SHEETS

F.A. RTE.	SECTION	COUNTY	TOTAL SHEETS	SHEET NO.
342	(531) BR 23	COOK	1211	856
		CONTRACT NO. 62W38		
	ILLINOIS	FED. AID PROJECT		

9/25/2024 7:54:42 AM

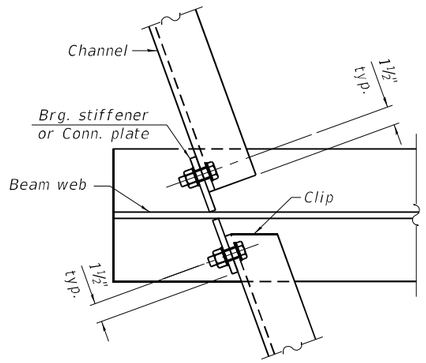

DETAIL A

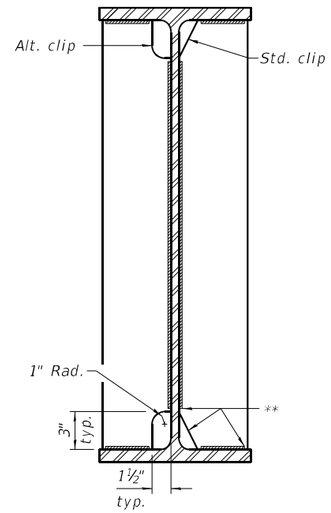

WELD LIMITS AND CLIP DETAILS

** Stop welds ¼" (±⅛") from edges as shown. Typical.

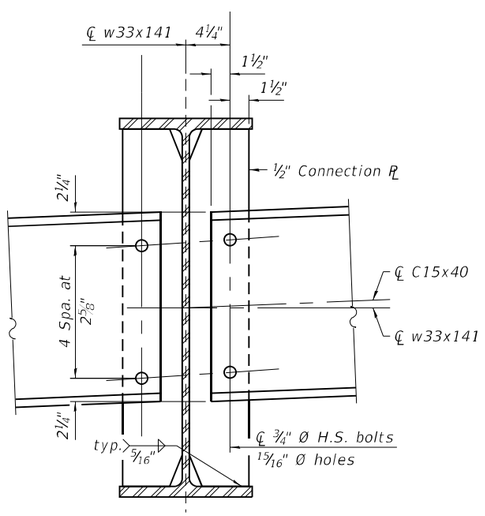

INTERIOR DIAPHRAGM

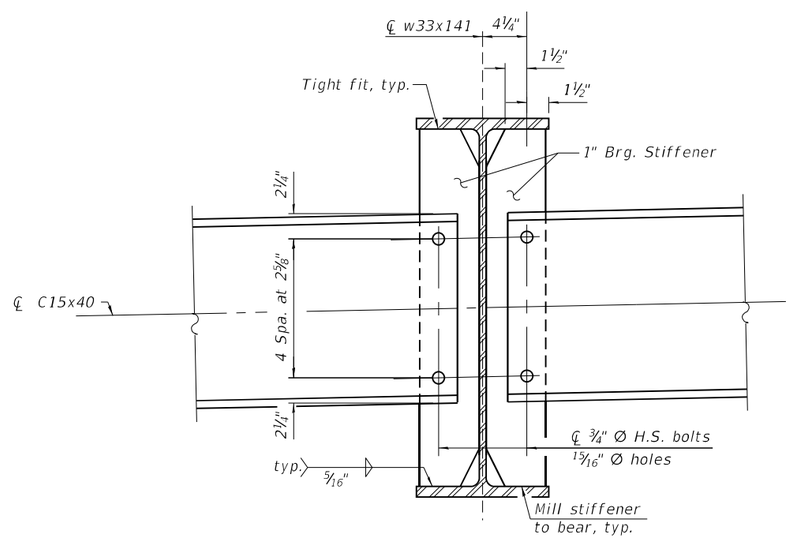

DIAPHRAGMS OVER PIERS

Notes:

1. Two hardened washers required for each set of oversized holes.
2. All diaphragms between beams shall be installed with erection pins and bolts in accordance with the erection plan approved by the Engineer. Individual diaphragms at supports may be temporarily disconnected to install bearing anchor rods.
3. Alternate channels of equal depth and larger weight are permitted to facilitate material acquisition. Alternate channels, if utilized, shall be provided at no additional cost to the department.

MODEL: Default
FILE NAME: S:\IOL\6300-6399\6346\113\Drawings\CAD\Micros-SSA\CAD_Sheets\0160373097O-62W38-039-DBD.dgn

STRAND ASSOCIATES
1170 SOUTH HOUBOLT ROAD
JOLIET, ILLINOIS 60431
(815) 744-4200
IDFPR NO. 184-001273

USER NAME = codyh	DESIGNED - TJE	REVISED -	
	CHECKED - NDR	REVISED -	
PLOT SCALE = 0:2.0000 ':" / in.	DRAWN - CJH	REVISED -	
PLOT DATE = 9/25/2024	CHECKED - TJE	REVISED -	

STATE OF ILLINOIS
DEPARTMENT OF TRANSPORTATION

DIAPHRAGM AND BEAM DETAILS
STRUCTURE NO. 016-0373 (NB) AND 016-0970 (SB)

SHEET 39 OF 73 SHEETS

F.A. RTE.	SECTION	COUNTY	TOTAL SHEETS	SHEET NO.
342	(531) BR 23	COOK	1211	857
		CONTRACT NO. 62W38		
	ILLINOIS	FED. AID PROJECT		

9/25/2024 7:54:43 AM

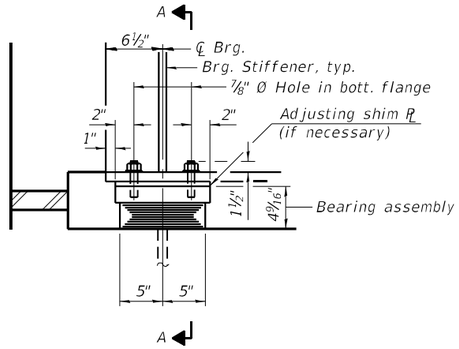

ELEVATION AT SOUTH AND NORTH ABUT.

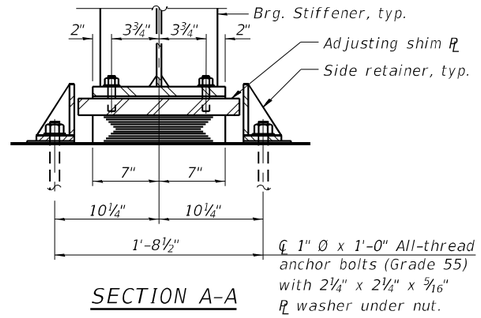

SECTION A-A

TYPE I ELASTOMERIC EXP. BRG.

(Beam lines - 2 thru 10 and 12 thru 20)

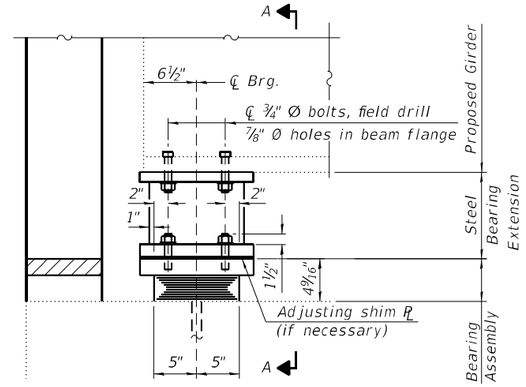

ELEVATION

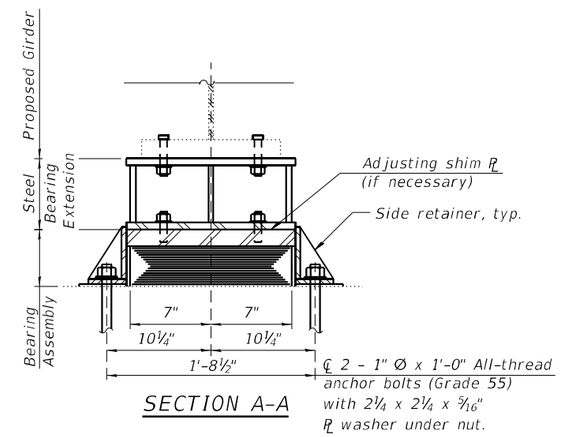

SECTION A-A

TYPE I ELASTOMERIC EXP. BRG. AT ABUTMENTS

(Beam lines - 1 and 11)

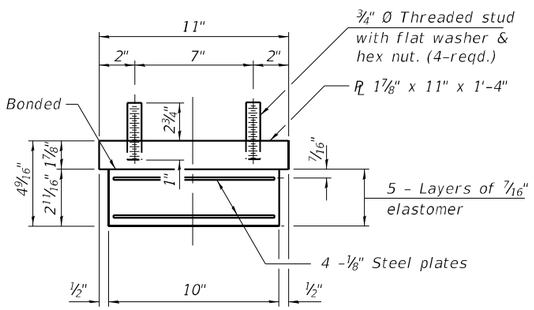

BEARING ASSEMBLY

(South and North Abutments)

Note:
Shim plates shall not be placed under bearing assembly.

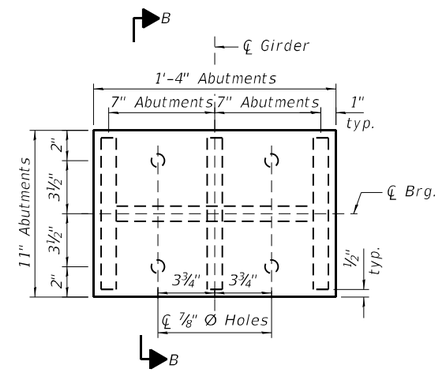

PLAN STEEL BEARING EXTENSION

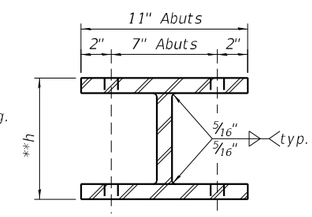

SECTION B-B

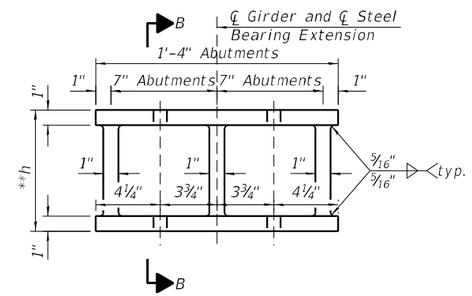

ELEVATION STEEL BEARING EXTENSION

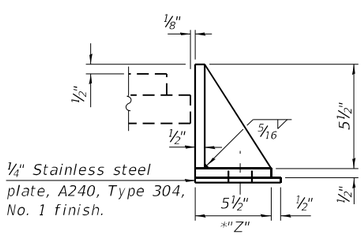

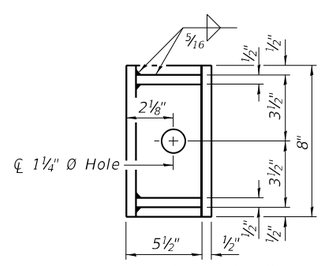

(Beam lines 2-10 and 12-20)

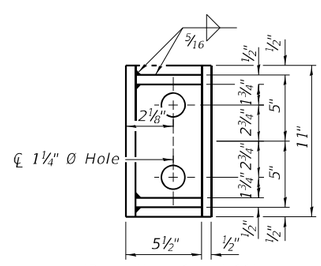

(Beam lines 1 and 11)

SIDE RETAINER

Equivalent rolled angle with stiffeners will be allowed in lieu of welded plates.

STEEL EXTENSION ASSEMBLY HEIGHT,**h

S.N. 016-0373 S.N. 016-0970

Beam	S. Abut.	N. Abut.	Beam	S. Abut.	N. Abut.
BEAM 11	10 1/4	11	BEAM 1	10 13/16	10 7/8
BEAM 12	———	———	BEAM 2	———	———
BEAM 13	———	———	BEAM 3	———	———
BEAM 14	———	———	BEAM 4	———	———
BEAM 15	———	———	BEAM 5	———	———
BEAM 16	———	———	BEAM 6	———	———
BEAM 17	———	———	BEAM 7	———	———
BEAM 18	———	———	BEAM 8	———	———
BEAM 19	———	———	BEAM 9	———	———
BEAM 20	———	———	BEAM 10	———	———

BILL OF MATERIAL

Item	Unit	Total
Elastomeric Bearing Assembly, Type I	EACH	40
Anchor Bolts, 1"	EACH	88

Notes:

1. Side retainers and stainless steel plates shall be included in the cost of Elastomeric Bearing Assembly, Type I.
2. Anchor bolts and side retainers at all supports shall be installed as each member is erected unless an equivalent temporary means of lateral restraint is used.
3. Two ⅛" adjusting shims shall be provided for each bearing in addition to all other plates or shims and placed as shown on bearing details.
4. All bearing plates, side retainers, anchor bolts, nuts, washers, and pintles shall be galvanized according to AASHTO M111 or M232 as applicable.

** 5. Prior to ordering any material, the Contractor shall field verify all steel bearing extension heights, existing drilled hole sizes and locations at abutments.

6. The cost of steel extensions, shim plates, and all connection bolts are included with the cost of Furnishing and Erecting Structural Steel.

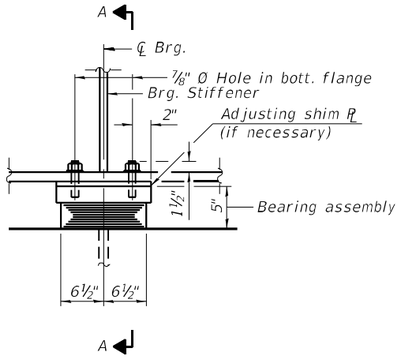

ELEVATION AT PIER 1 AND PIER 3

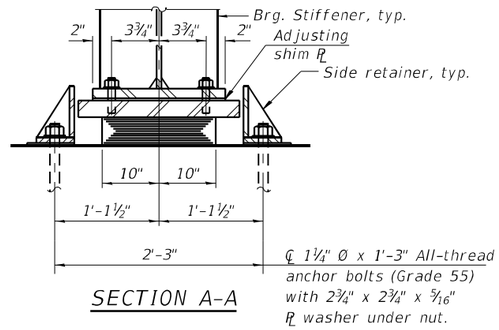

SECTION A-A

TYPE I ELASTOMERIC EXP. BRG.

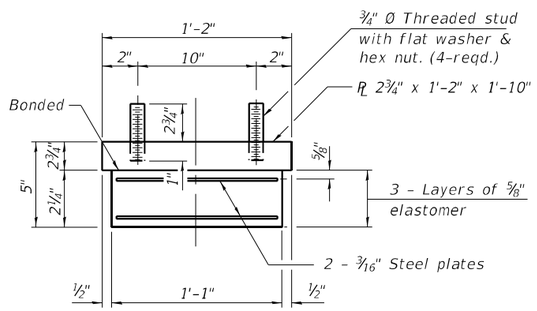

BEARING ASSEMBLY

Note:
Shim plates shall not be placed under bearing assembly.

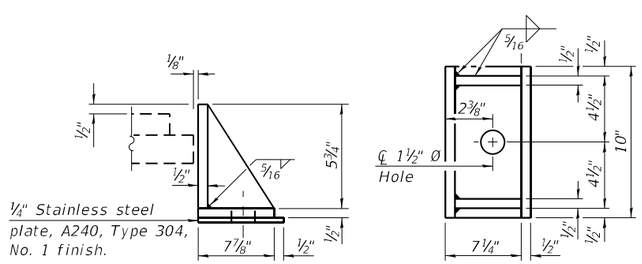

SIDE RETAINER

Equivalent rolled angle with stiffeners will be allowed in lieu of welded plates.

BILL OF MATERIAL

Item	Unit	Total
Elastomeric Bearing Assembly, Type I	EACH	40
Anchor Bolts, 1 1/4"	EACH	80

Notes:
1. Side retainers and stainless steel plates shall be included in the cost of Elastomeric Bearing Assembly, Type I.
2. Anchor bolts and side retainers at all supports shall be installed as each member is erected unless an equivalent temporary means of lateral restraint is used.
3. Two 1/8" adjusting shims shall be provided for each bearing in addition to all other plates or shims and placed as shown on bearing details.
4. All bearing plates, side retainers, anchor bolts, nuts, washers, and pintles shall be galvanized according to AASHTO M111 or M232 as applicable.

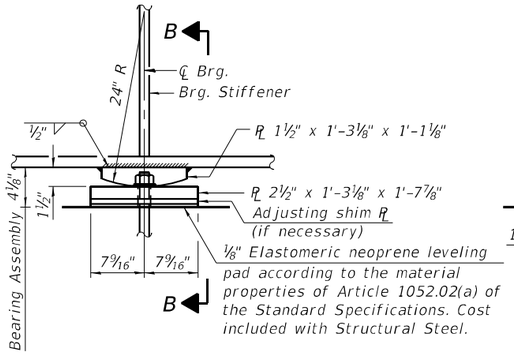

ELEVATION AT PIER

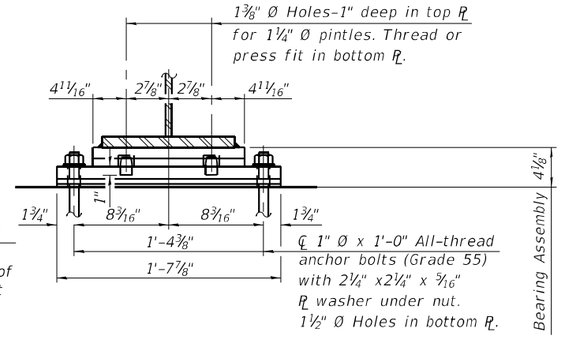

SECTION B-B

FIXED BEARING AT PIER 2

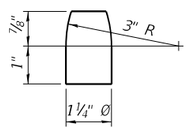

PINTLE

BILL OF MATERIAL

Item	Unit	Total
Anchor Bolts, 1"	EACH	40

Notes:

1. Anchor bolts at all supports shall be installed as each member is erected unless an equivalent temporary means of lateral restraint is used.
2. Two 1/8" adjusting shims shall be provided for each bearing in addition to all other plates or shims and placed as shown on bearing details.
3. All bearing plates, anchor bolts, nuts, washers, and pintles shall be galvanized according to AASHTO M111 or M232 as applicable.

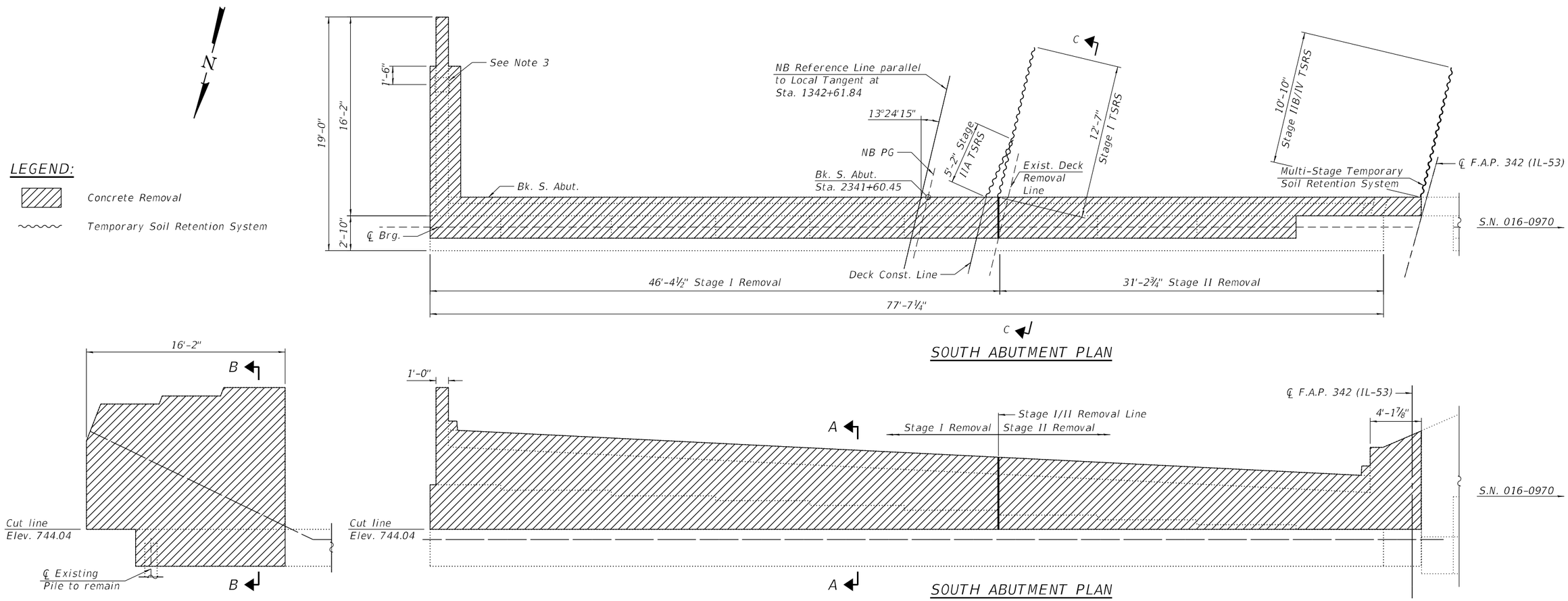

BILL OF MATERIALS

Item	Unit	Total
Concrete Removal	CU YD	46.2
Temporary Soil Retention System	SQ FT	140

Notes:

1. Existing vertical reinforcement in back wall shall be cleaned and incorporated into new construction. Cost included in the cost of "Concrete Removal".
2. Any reinforcement bars that are damaged during concrete removal operations shall be repaired or replaced using an approved bar splicer or anchorage system. Cost included in the cost of "Concrete Removal".
3. Contractor to take care not to damage pile or pile anchorage during Concrete Removal.
4. The elevations and dimensions shown are calculated based on existing plans and field measurements. The Contractor shall verify in field and make necessary approved adjustments prior to removal, repairs, or ordering of materials. For additional information, see Existing Drawings.
5. A cantilevered sheet piling design does not appear feasible and additional memebers or other retention systems may be necessary. The Contractor shall submit a Temporary Soil Retention System design including plan details and calculations for review and acceptance by the Engineer.
6. Specified Temporary Soil Retention System will be used for 2 separate construction stages due to necessary required between stages.
7. For Offset sketch, see sheet 3 of 73.

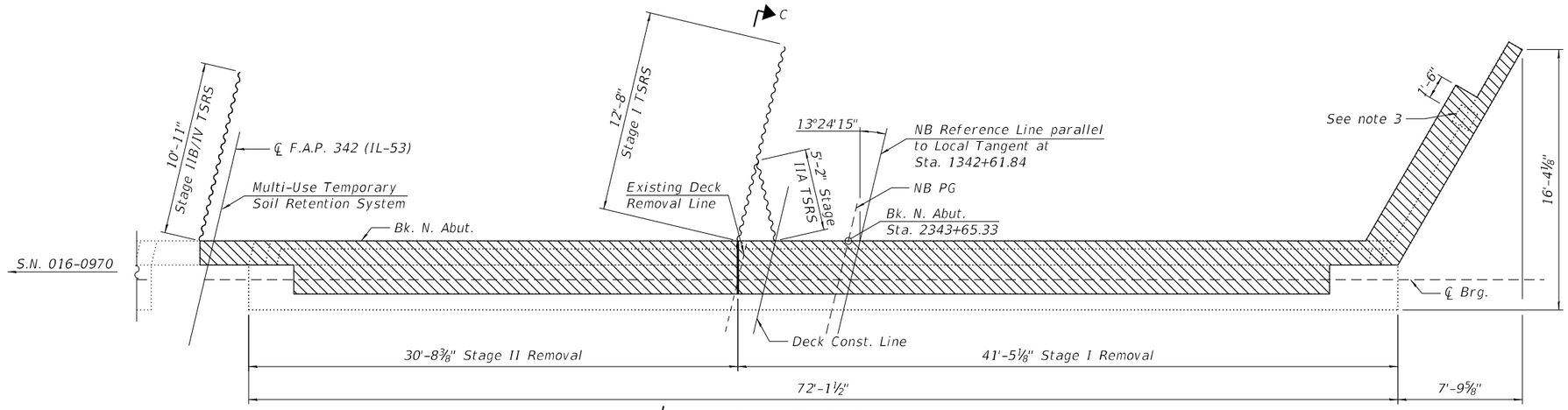

NORTH ABUTMENT PLAN

LEGEND

Concrete Removal

Temporary Soil Retention System

N

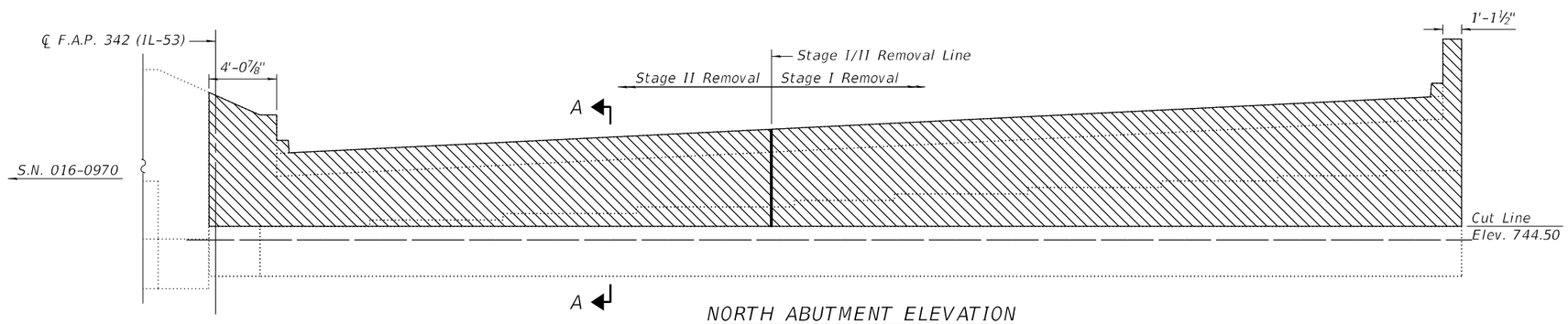

NORTH ABUTMENT ELEVATION

(Looking North)

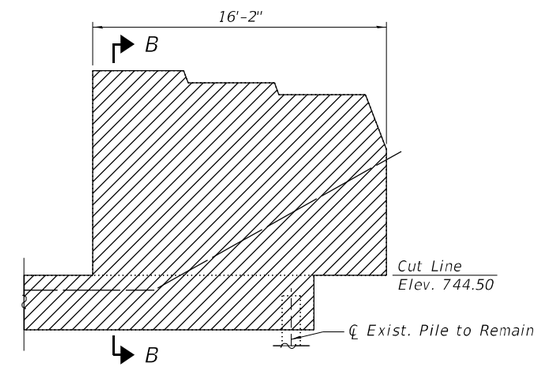

BILL OF MATERIALS

Item	Unit	Total
Concrete Removal	CU YD	43.5
Temporary Soil Retention System	SQ FT	142

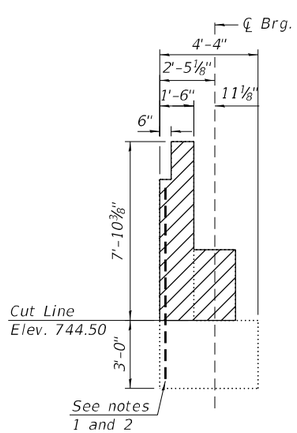

SECTION A-A

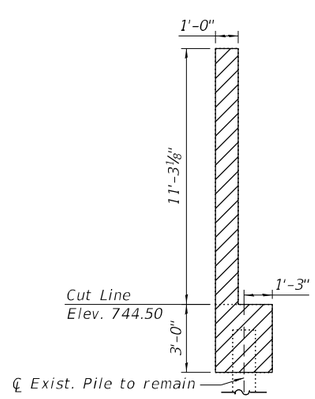

SECTION B-B

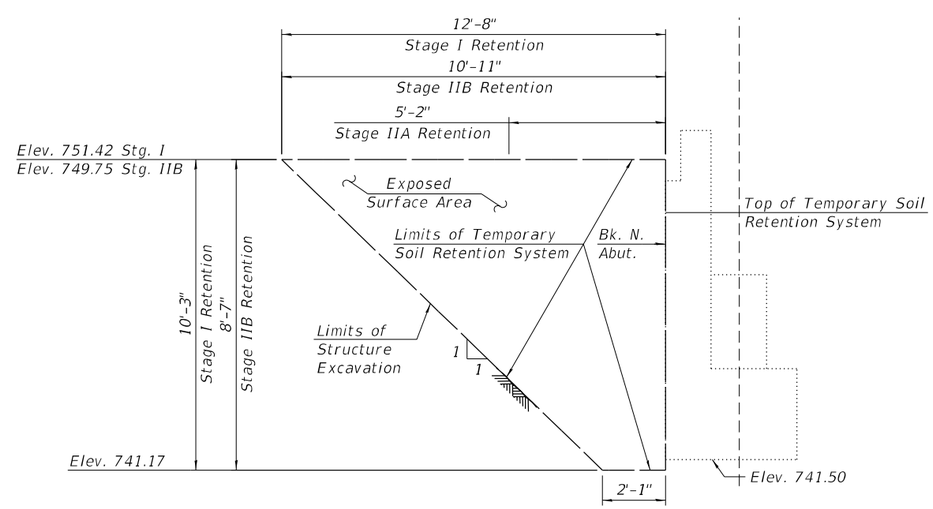

SECTION C-C TEMPORARY SOIL RETENTION SYSTEM

Notes:

1. Existing vertical reinforcement in back wall shall be cleaned and incorporated into new construction. Cost included in the cost of "Concrete Removal".
2. Any reinforcement bars that are damaged during concrete removal operations shall be repaired or replaced using an approved bar splicer or anchorage system. Cost included in the cost of "Concrete Removal".
3. Contractor to take care not to damage pile or pile anchorage during Concrete Removal.
4. The elevations and dimensions shown are calculated based on existing plans and field measurements. The Contractor shall verify in field and make necessary approved adjustments prior to removal, repairs, or ordering of materials. For additional information, see Existing Drawings.
5. A cantilevered sheet piling design does not appear feasible and additional memebers or other retention systems may be necessary. The Contractor shall submit a Temporary Soil Retention System design including plan details and calculations for review and acceptance by the Engineer.
6. Specified Temporary Soil Retention System will be used for 2 separate construction stages due to necessary required between stages.
7. For Offset sketch, see sheet 3 of 73.

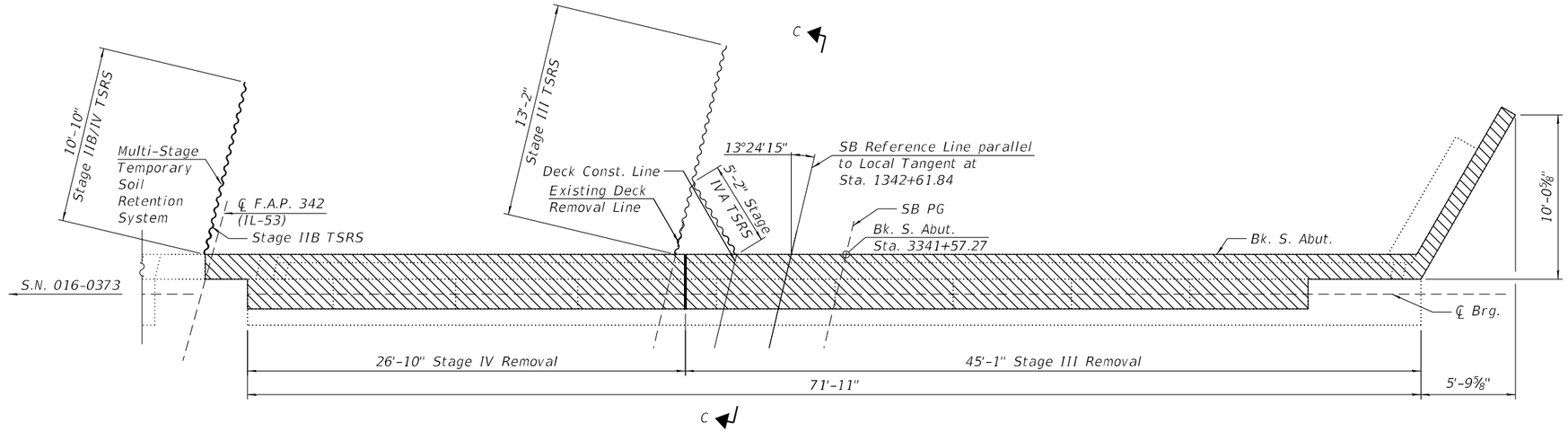

SOUTH ABUTMENT PLAN

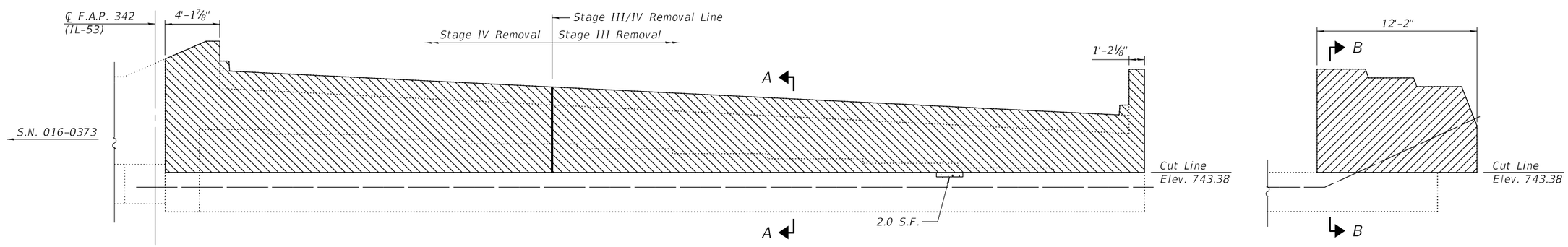

SOUTH ABUTMENT ELEVATION

(Looking South)

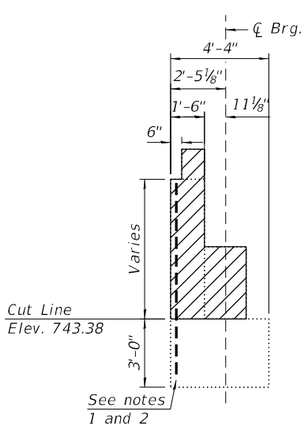

SECTION A-A

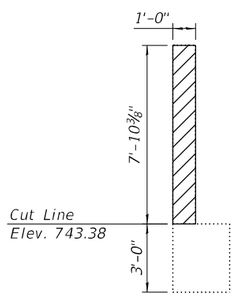

SECTION B-B

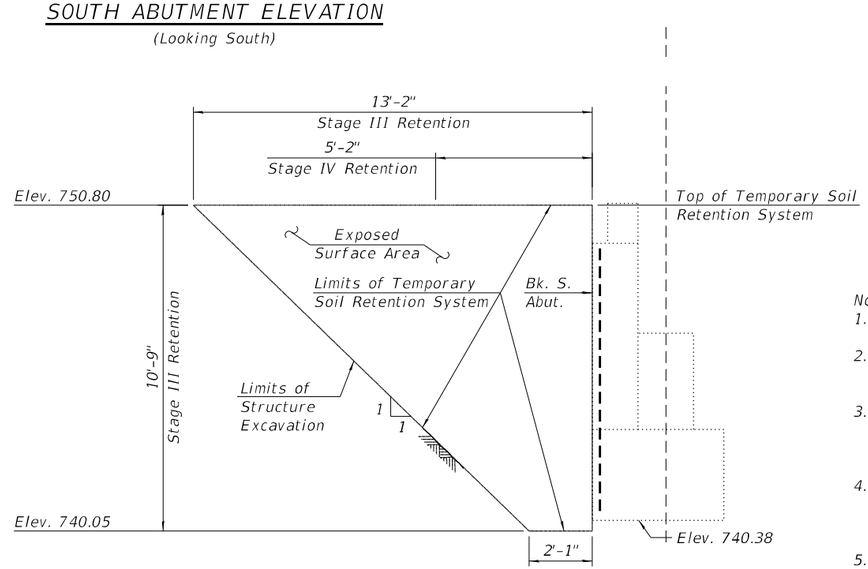

SECTION C-C TEMPORARY SOIL RETENTION SYSTEM

LEGEND

- Concrete Removal
- Structural Repair of Concrete (Depth equal to or less than 5 inches)
- Temporary Soil Retention System

N

BILL OF MATERIALS

Item	Unit	Total
Concrete Removal	CU YD	35.9
Temporary Soil Retention System	SQ FT	93
Structural Repair of Concrete (Depth Equal to or Less Than 5 Inches)	SQ FT	2

Notes:

1. Existing vertical reinforcement in back wall shall be cleaned and incorporated into new construction. Cost included in the cost of "Concrete Removal".
2. Any reinforcement bars that are damaged during concrete removal operations shall be repaired or replaced using an approved bar splicer or anchorage system. Cost included in the cost of "Concrete Removal".
3. The elevations and dimensions shown are calculated based on existing plans and field measurements. The Contractor shall verify in field and make necessary approved adjustments prior to removal, repairs, or ordering of materials. For additional information, see Existing Drawings.
4. A cantilevered sheet piling design does not appear feasible and additional memebers or other retention systems may be necessary. The Contractor shall submit a Temporary Soil Retention System design including plan details and calculations for review and acceptance by the Engineer.
5. Specified Temporary Soil Retention System will be used for 2 separate construction stages due to necessary required between stages.
6. For Offset sketch, see sheet 3 of 73.

LEGEND:

- Concrete Removal
- Structural Repair of Concrete (Depth equal to or less than 5 inches)
- Temporary Soil Retention System

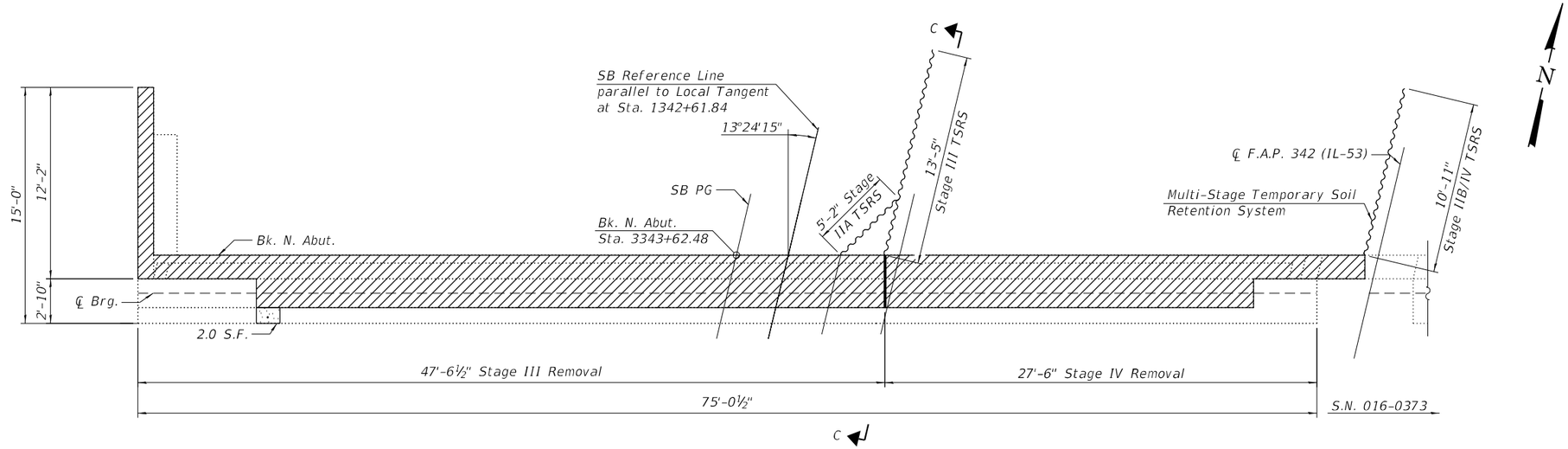

NORTH ABUTMENT PLAN

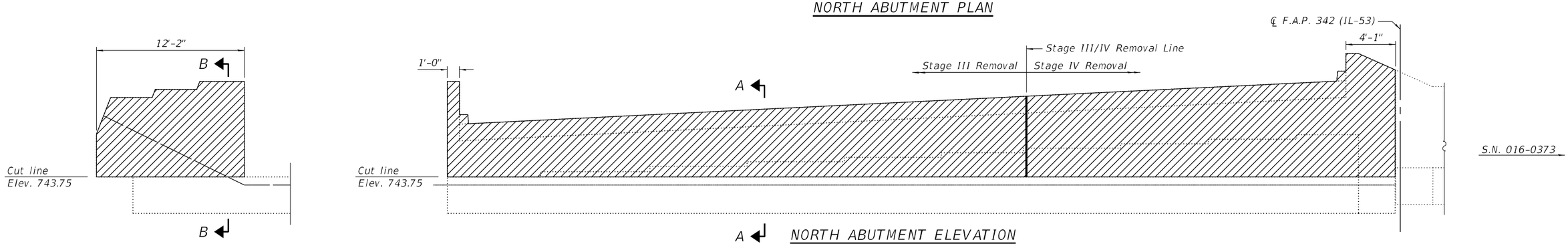

NORTH ABUTMENT ELEVATION

(Looking North)

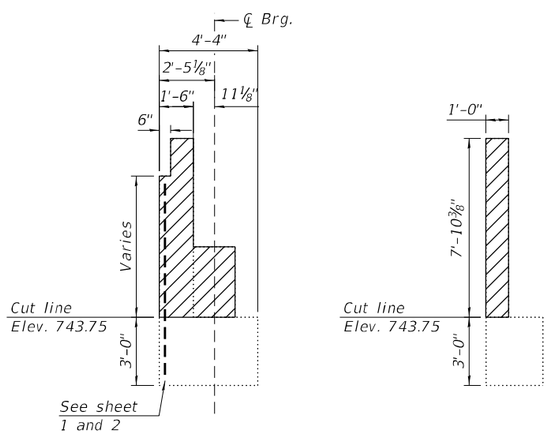

SECTION A-A

SECTION B-B

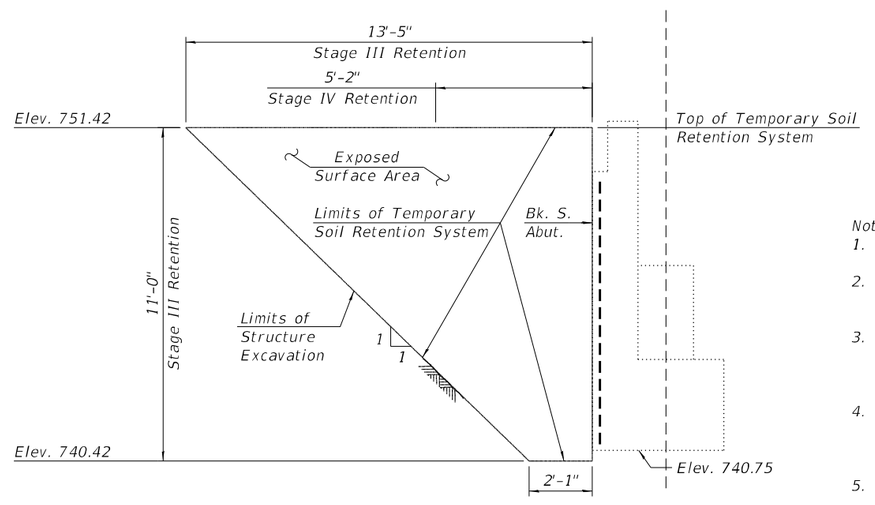

SECTION C-C TEMPORARY SOIL RETENTION SYSTEM

BILL OF MATERIALS

Item	Unit	Total
Concrete Removal	CU YD	38.7
Temporary Soil Retention System	SQ FT	96
Structural Repair of Concrete (Depth Equal to or Less Than 5 Inches)	SQ FT	2

Notes:

1. Existing vertical reinforcement in back wall shall be cleaned and incorporated into new construction. Cost included in the cost of "Concrete Removal".
2. Any reinforcement bars that are damaged during concrete removal operations shall be repaired or replaced using an approved bar splicer or anchorage system. Cost included in the cost of "Concrete Removal".
3. The elevations and dimensions shown are calculated based on existing plans and field measurements. The Contractor shall verify in field and make necessary approved adjustments prior to removal, repairs, or ordering of materials. For additional information, see Existing Drawings.
4. A cantilevered sheet piling design does not appear feasible and additional memebers or other retention systems may be necessary. The Contractor shall submit a Temporary Soil Retention System design including plan details and calculations for review and acceptance by the Engineer.
5. Specified Temporary Soil Retention System will be used for 2 separate construction stages due to necessary required between stages.
6. For Offset sketch, see sheet 3 of 73.

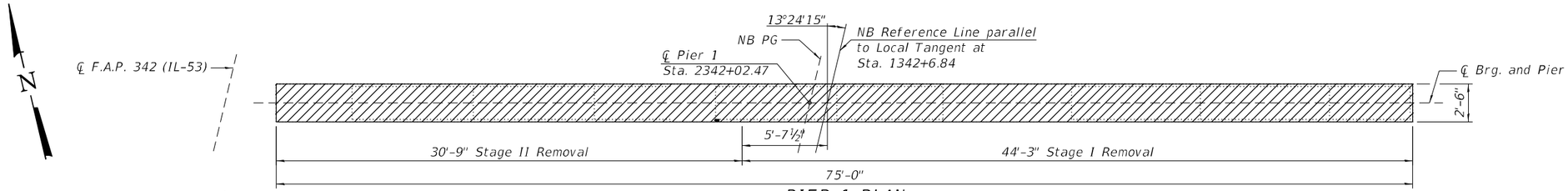

PIER 1 PLAN

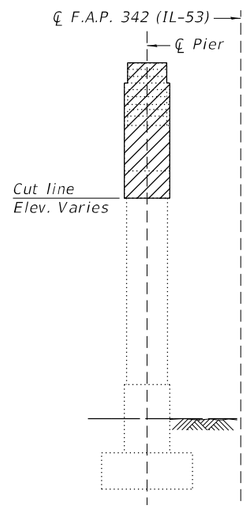

PIER 1 EAST ELEVATION
(Looking West)

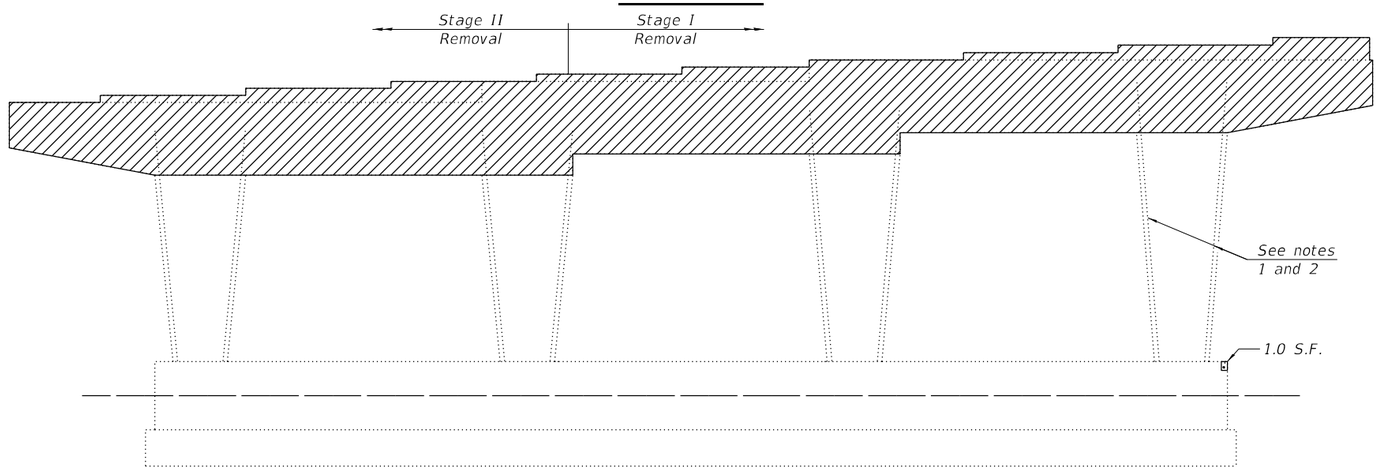

PIER 1 ELEVATION
(Looking North)

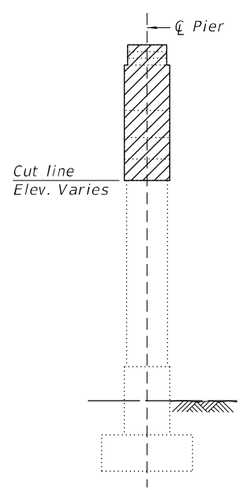

PIER 1 WEST ELEVATION
(Looking East)

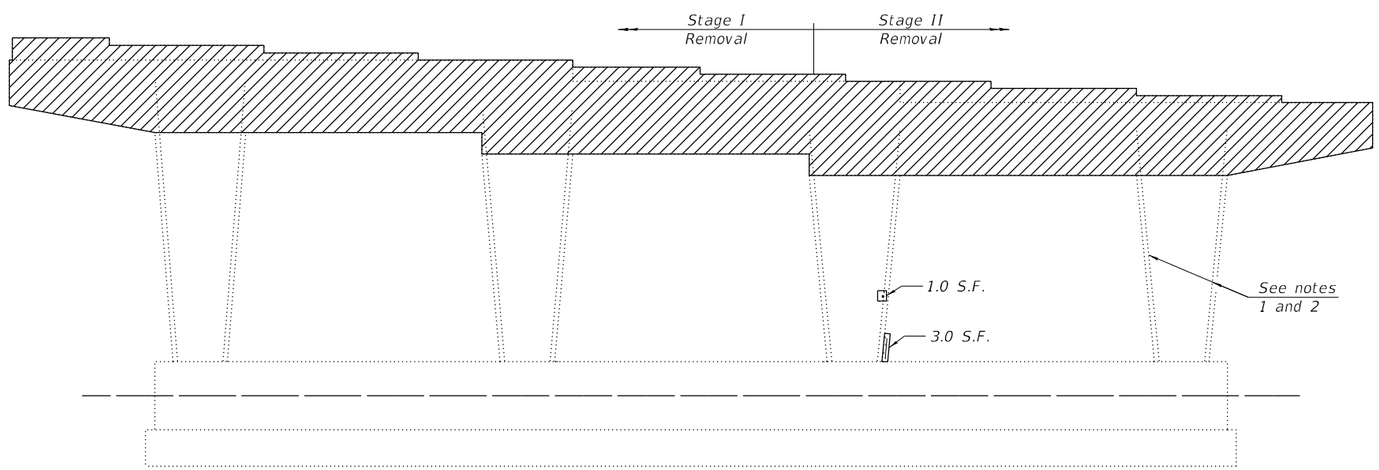

PIER 1 ELEVATION
(Looking South)

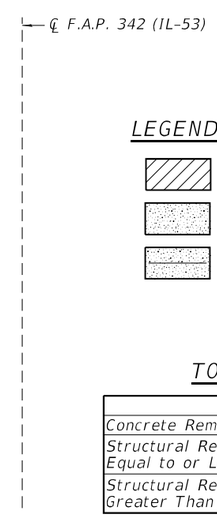

LEGEND:

- Concrete Removal
- Structural Repair of Concrete (Depth equal to or less than 5")
- Structural Repair of Concrete (Depth greater than 5")

TOTAL BILL OF MATERIAL

Item	Unit	Total
Concrete Removal	CU YD	31.1
Structural Repair of Concrete (Depth Equal to or Less Than 5 Inches)	SQ FT	2
Structural Repair of Concrete (Depth Greater Than 5 Inches)	SQ FT	3

Notes:

1. Existing reinforcement in columns shall be cleaned and incorporated into new construction. Cost included in the cost of "Concrete Removal".
2. Any reinforcement bars that are damaged during concrete removal operations shall be repaired or replaced using an approved bar splicer or anchorage system. Cost included in the cost of "Concrete Removal".
3. The elevations and dimensions shown are calculated based on existing plans and field measurements. The Contractor shall verify in field and make necessary approved adjustments prior to removals, repairs, or ordering of materials. For additional information, see Existing drawings.

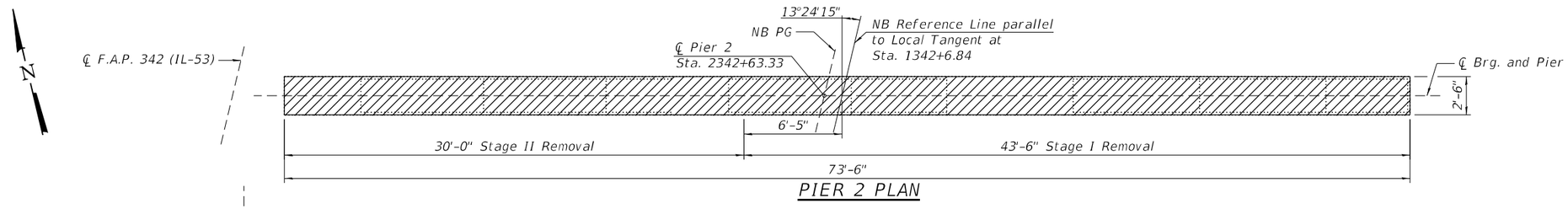

PIER 2 PLAN

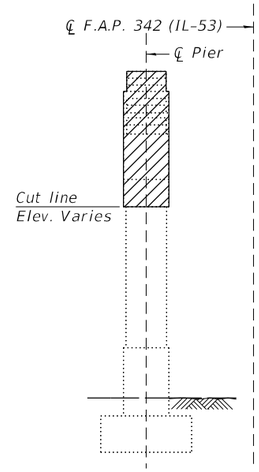

PIER 2 EAST ELEVATION
(Looking West)

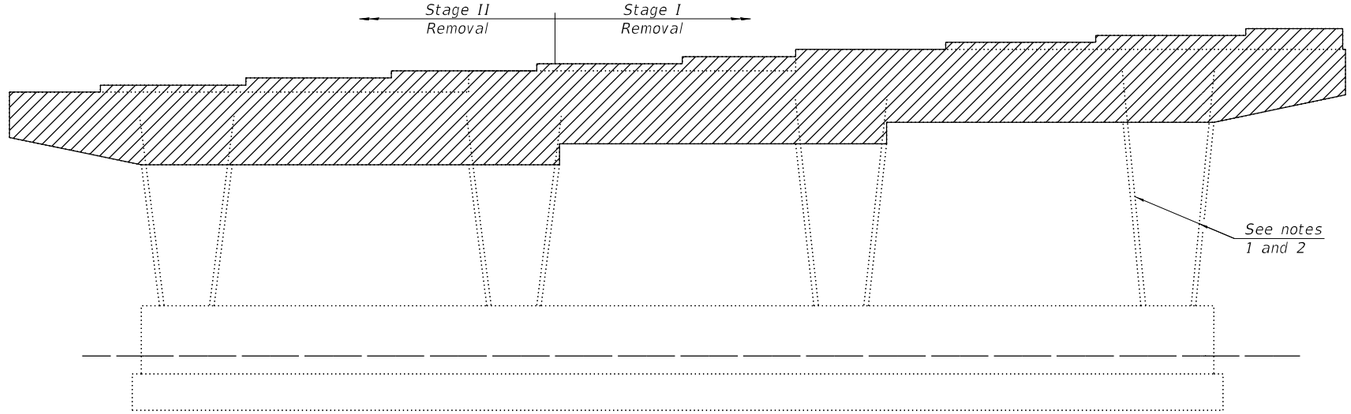

PIER 2 ELEVATION
(Looking North)

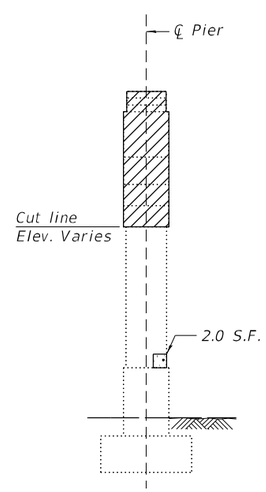

PIER 2 WEST ELEVATION
(Looking East)

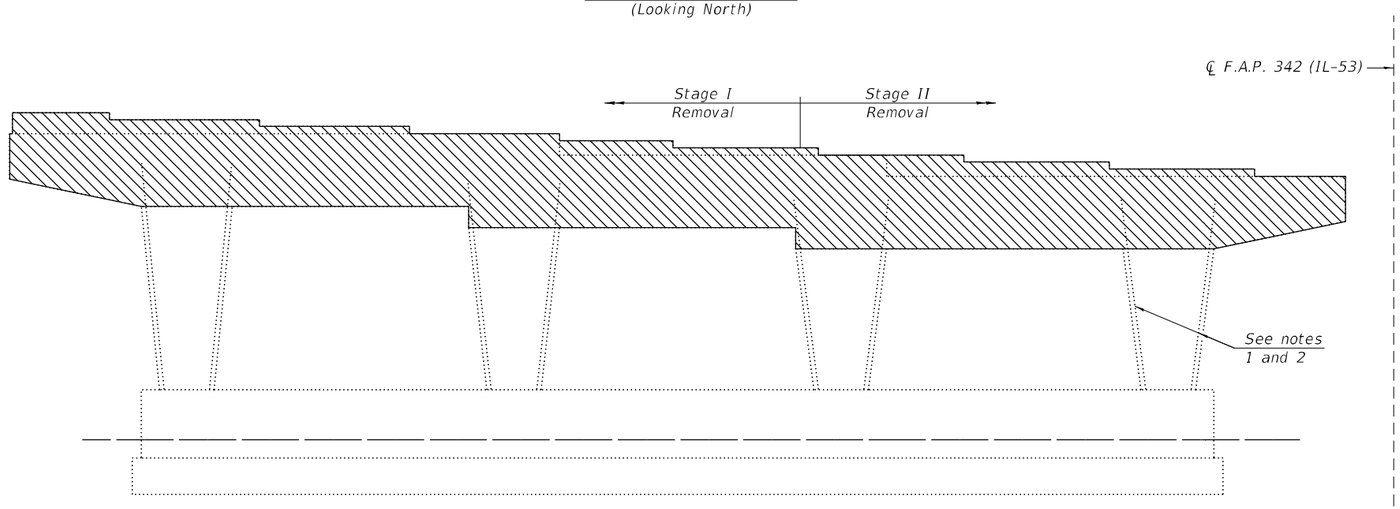

PIER 2 ELEVATION
(Looking South)

LEGEND:

- Concrete Removal
- Structural Repair of Concrete (Depth equal to or less than 5")

TOTAL BILL OF MATERIAL

Item	Unit	Total
Concrete Removal	CU YD	30.4
Structural Repair of Concrete (Depth Equal to or Less Than 5 Inches)	SQ FT	2

Notes:

1. Existing reinforcement in columns shall be cleaned and incorporated into new construction. Cost included in the cost of "Concrete Removal".
2. Any reinforcement bars that are damaged during concrete removal operations shall be repaired or replaced using an approved bar splicer or anchorage system. Cost included in the cost of "Concrete Removal".
3. The elevations and dimensions shown are calculated based on existing plans and field measurements. The Contractor shall verify in field and make necessary approved adjustments prior to removals, repairs, or ordering of materials. For additional information, see Existing drawings.

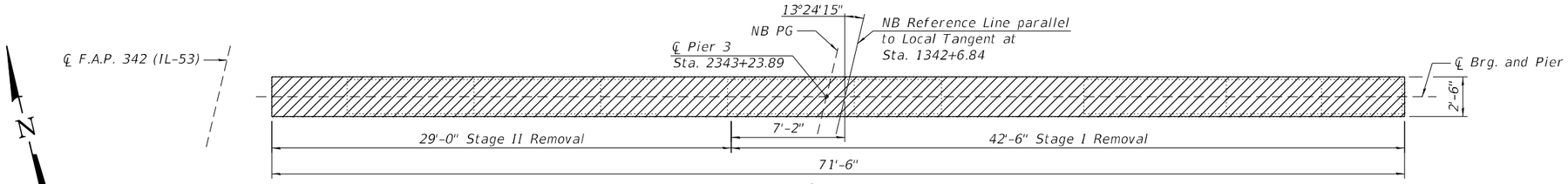

PIER 3 PLAN

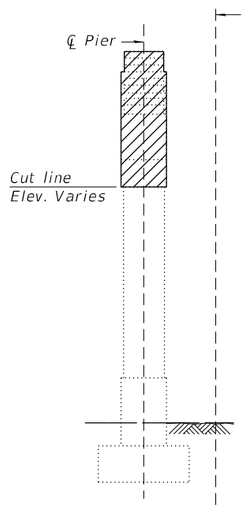

PIER 3 EAST ELEVATION
(Looking West)

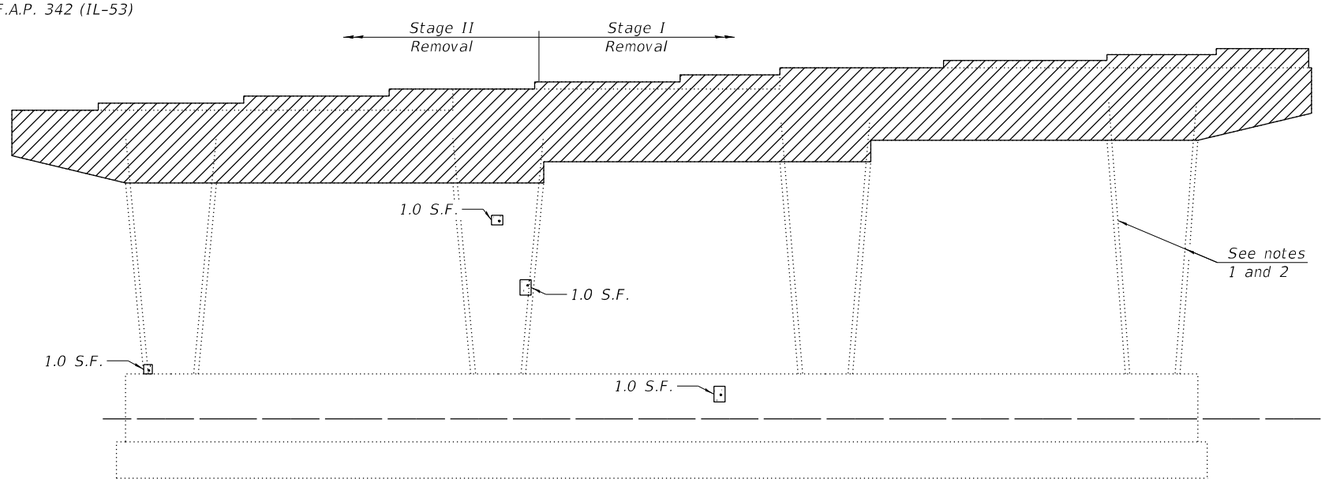

PIER 3 ELEVATION
(Looking North)

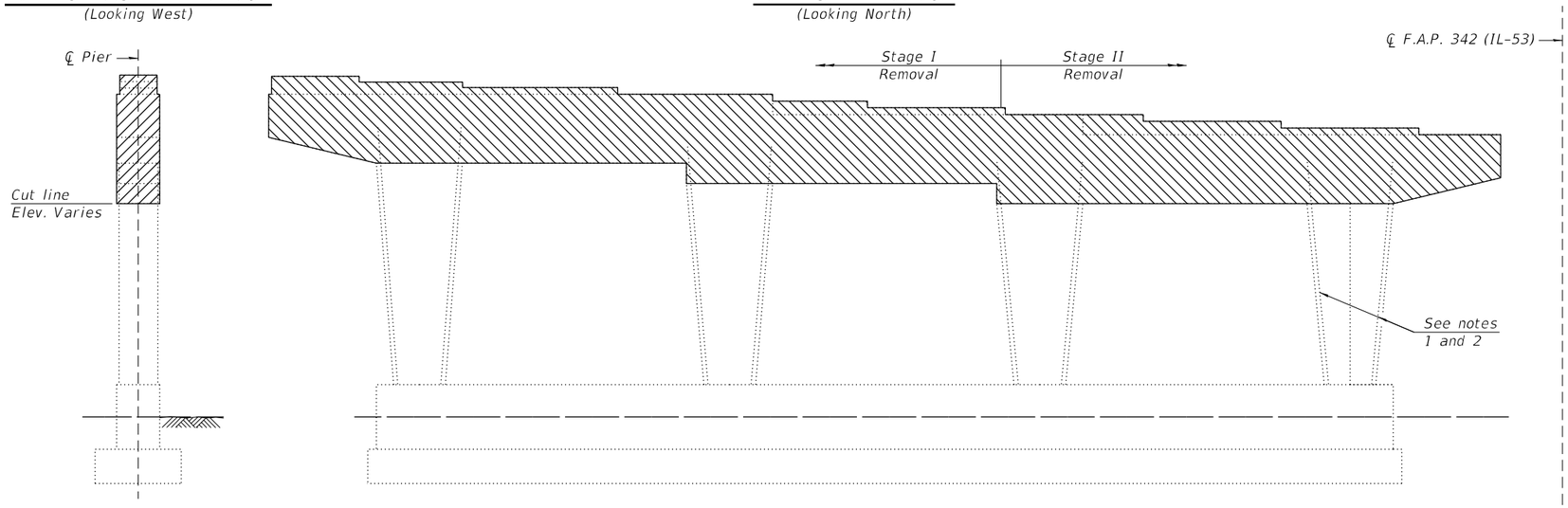

PIER 3 WEST ELEVATION
(Looking East)

PIER 3 ELEVATION
(Looking South)

LEGEND:

Concrete Removal

Structural Repair of Concrete
(Depth equal to or less than 5")

TOTAL BILL OF MATERIAL

Item	Unit	Total
Concrete Removal	CU YD	29.5
Structural Repair of Concrete (Depth Equal to or Less Than 5 Inches)	SQ FT	2

Notes:

1. Existing reinforcement in columns shall be cleaned and incorporated into new construction. Cost included in the cost of "Concrete Removal".
2. Any reinforcement bars that are damaged during concrete removal operations shall be repaired or replaced using an approved bar splicer or anchorage system. Cost included in the cost of "Concrete Removal".
3. The elevations and dimensions shown are calculated based on existing plans and field measurements. The Contractor shall verify in field and make necessary approved adjustments prior to removals, repairs, or ordering of materials. For additional information, see Existing drawings.

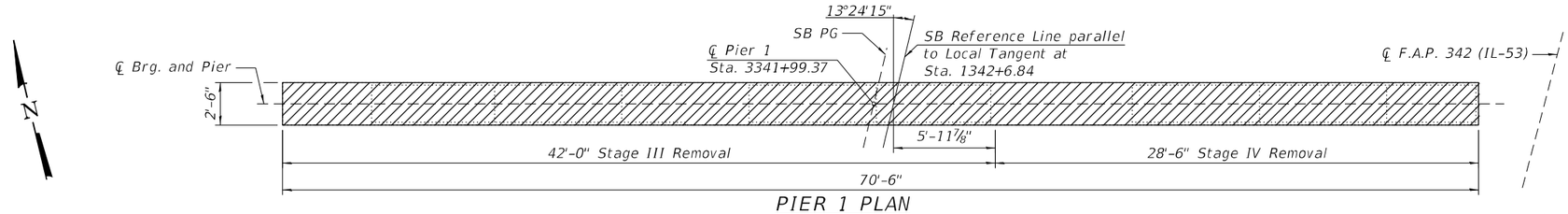

PIER 1 PLAN

PIER 1 EAST ELEVATION
(Looking West)

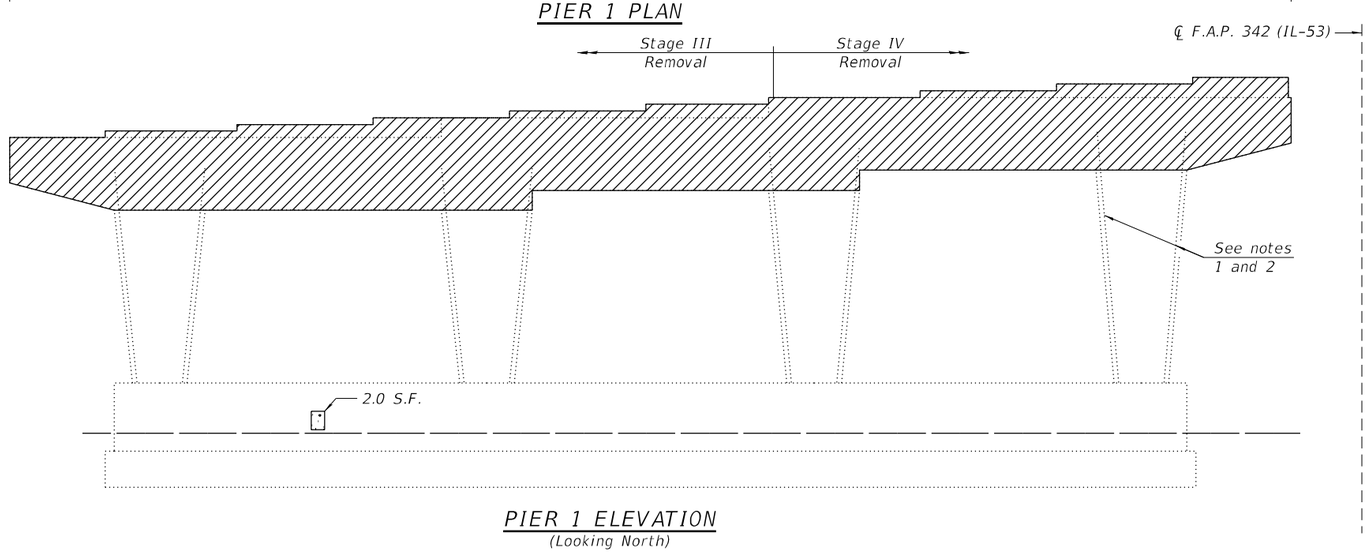

PIER 1 ELEVATION
(Looking North)

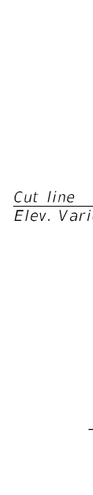

PIER 1 WEST ELEVATION
(Looking East)

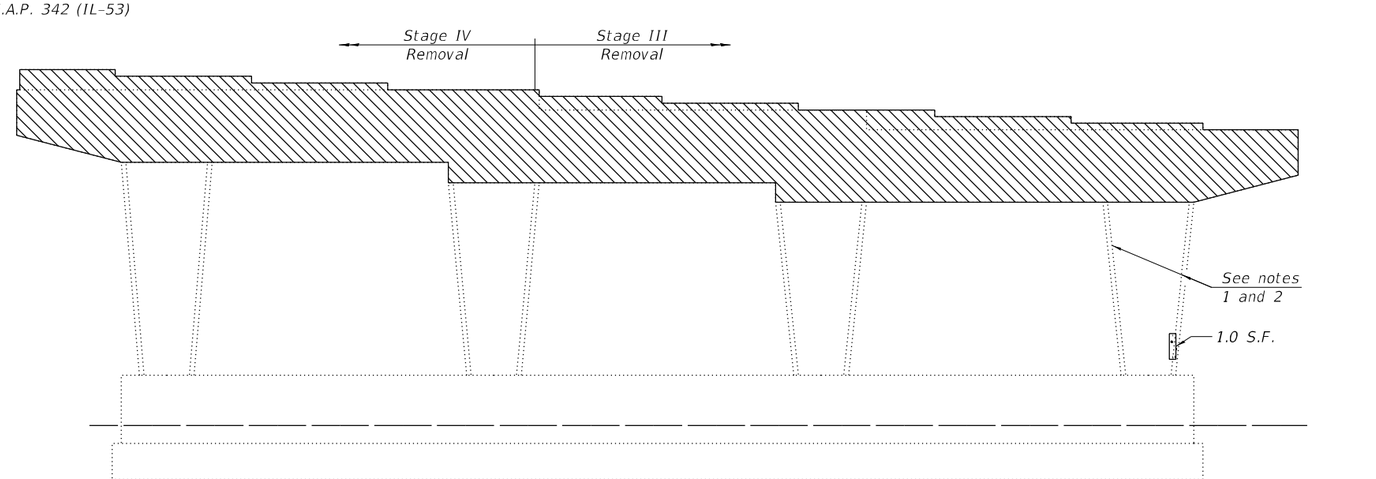

PIER 1 ELEVATION
(Looking South)

LEGEND:

- Concrete Removal
- Structural Repair of Concrete (Depth equal to or less than 5")

TOTAL BILL OF MATERIAL

Item	Unit	Total
Concrete Removal	CU YD	29.1
Structural Repair of Concrete (Depth Equal to or Less Than 5 Inches)	SQ FT	3

Notes:

1. Existing reinforcement in columns shall be cleaned and incorporated into new construction. Cost included in the cost of "Concrete Removal".
2. Any reinforcement bars that are damaged during concrete removal operations shall be repaired or replaced using an approved bar splicer or anchorage system. Cost included in the cost of "Concrete Removal".
3. The elevations and dimensions shown are calculated based on existing plans and field measurements. The Contractor shall verify in field and make necessary approved adjustments prior to removals, repairs, or ordering of materials. For additional information, see Existing drawings.

STRAND ASSOCIATES®
1170 SOUTH HOUBOLT ROAD
JOLIET, ILLINOIS 60431
(815) 744-4200
IDFPR NO. 184-001273

USER NAME = codyh	DESIGNED - BRL	REVISED -	STATE OF ILLINOIS DEPARTMENT OF TRANSPORTATION	CONCRETE REMOVAL/REPAIR PIER 1 STRUCTURE NO. 016-0970 (SB)	
	CHECKED - ELR	REVISED -			
PLOT SCALE = 0:2.0000 ':" / in.	DRAWN - CJH	REVISED -			
PLOT DATE = 9/25/2024	CHECKED - BRL	REVISED -		SHEET 50 OF 73 SHEETS	

F.A. RTE.	SECTION	COUNTY	TOTAL SHEETS	SHEET NO.
342	(531)BR 23	COOK	1211	868
		CONTRACT NO. 62W38		
	ILLINOIS	FED. AID PROJECT		

MODEL: Default
FILE NAME: S:\IOL\16300-63996346\113\Drawings\CAD\Micros-SSA\CAD_Sheets\0160373097062W38-050-CRSPIER1.dgn
9/25/2024 7:55:05 AM

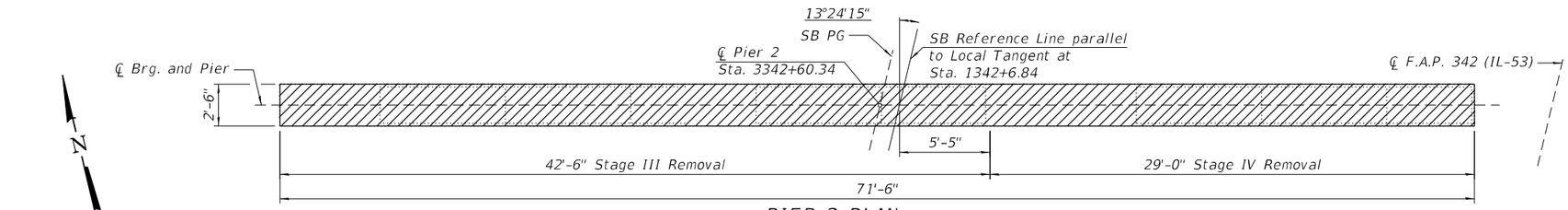

PIER 2 PLAN

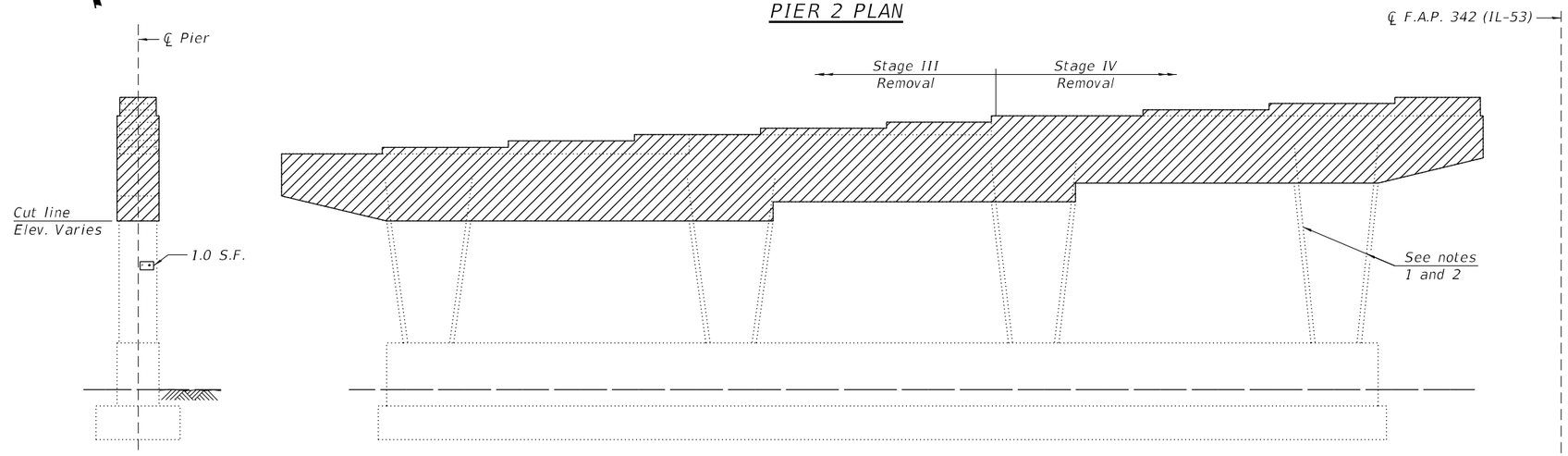

PIER 2 EAST ELEVATION
(Looking West)

PIER 2 ELEVATION
(Looking North)

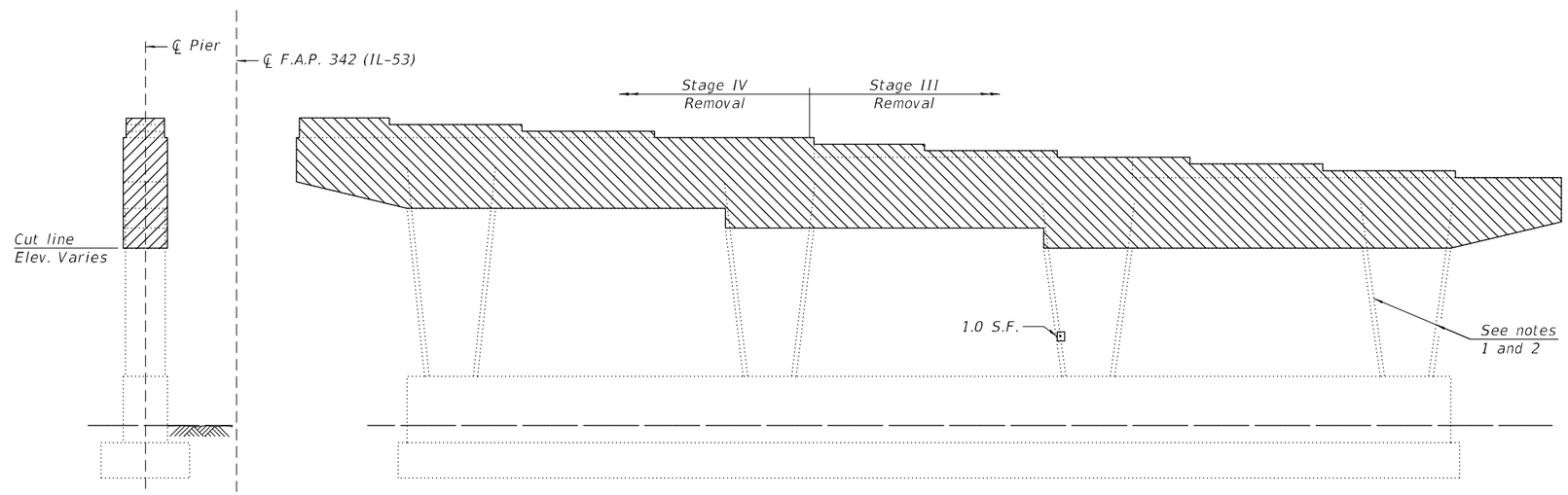

PIER 2 WEST ELEVATION
(Looking East)

PIER 2 ELEVATION
(Looking South)

LEGEND:

- Concrete Removal
- Structural Repair of Concrete (Depth equal to or less than 5")

TOTAL BILL OF MATERIAL

Item	Unit	Total
Concrete Removal	CU YD	29.4
Structural Repair of Concrete (Depth Equal to or Less Than 5 Inches)	SQ FT	2

Notes:

1. Existing reinforcement in columns shall be cleaned and incorporated into new construction. Cost included in the cost of "Concrete Removal".
2. Any reinforcement bars that are damaged during concrete removal operations shall be repaired or replaced using an approved bar splicer or anchorage system. Cost included in the cost of "Concrete Removal".
3. The elevations and dimensions shown are calculated based on existing plans and field measurements. The Contractor shall verify in field and make necessary approved adjustments prior to removals, repairs, or ordering of materials. For additional information, see Existing drawings.

STRAND ASSOCIATES®
1170 SOUTH HOUBOLT ROAD
JOLIET, ILLINOIS 60431
(815) 744-4200
IDFPR NO. 184-001273

USER NAME = codyh	DESIGNED - BRL	REVISED -	
	CHECKED - ELR	REVISED -	
PLOT SCALE = 0:2.0000 ':" / in.	DRAWN - CJH	REVISED -	
PLOT DATE = 9/25/2024	CHECKED - BRL	REVISED -	

STATE OF ILLINOIS
DEPARTMENT OF TRANSPORTATION

CONCRETE REMOVAL/REPAIR PIER 2
STRUCTURE NO. 016-0970 (SB)

SHEET 51 OF 73 SHEETS

F.A. RTE.	SECTION	COUNTY	TOTAL SHEETS	SHEET NO.
342	(531)BR 23	COOK	1211	869

CONTRACT NO. 62W38

ILLINOIS | FED. AID PROJECT

MODEL: Default
FILE NAME: S:\IDL\6300-6399\6246\113\Drawings\CAD\Micros-SS4\CAD_Sheets\0160370970-62W38-051-CRSPIER2.dgn
9/25/2024 7:55:07 AM

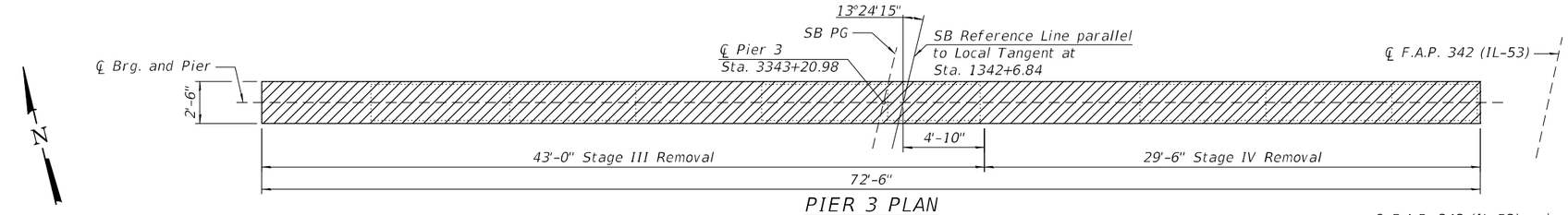

PIER 3 PLAN

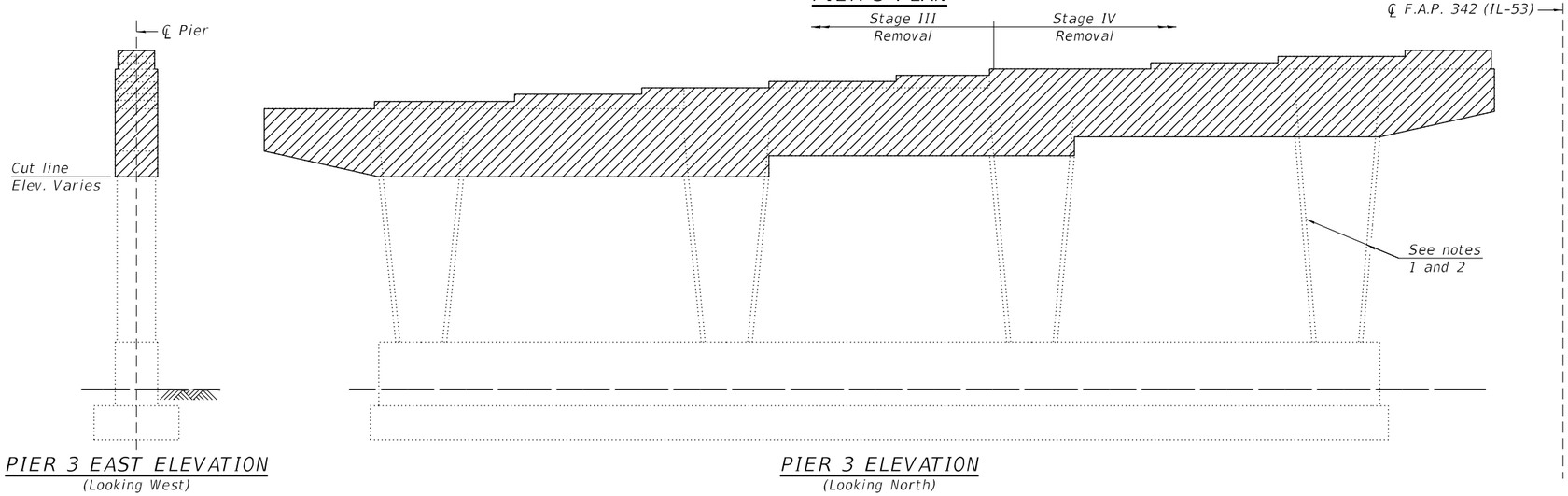

PIER 3 EAST ELEVATION
(Looking West)

PIER 3 ELEVATION
(Looking North)

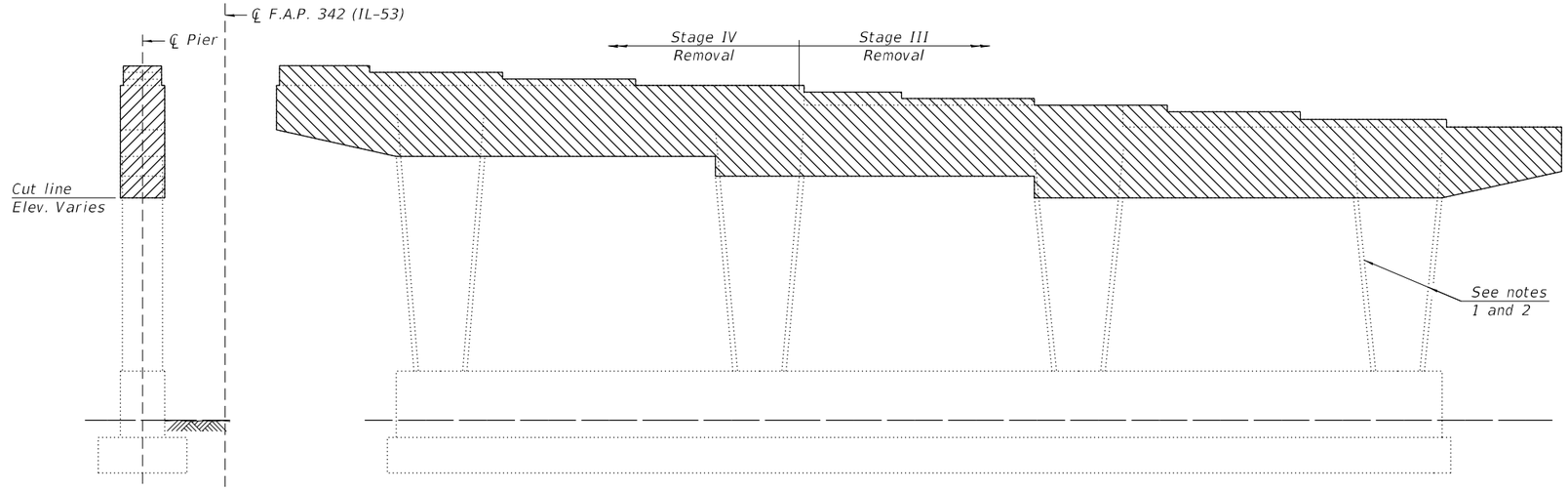

PIER 3 WEST ELEVATION
(Looking East)

PIER 3 ELEVATION
(Looking South)

LEGEND:

Concrete Removal

TOTAL BILL OF MATERIAL

Item	Unit	Total
Concrete Removal	CU YD	29.8

Notes:
1. Existing reinforcement in columns shall be cleaned and incorporated into new construction. Cost included in the cost of "Concrete Removal".
2. Any reinforcement bars that are damaged during concrete removal operations shall be repaired or replaced using an approved bar splicer or anchorage system. Cost included in the cost of "Concrete Removal".
3. The elevations and dimensions shown are calculated based on existing plans and field measurements. The Contractor shall verify in field and make necessary approved adjustments prior to removals, repairs, or ordering of materials. For additional information, see Existing drawings.

STRAND ASSOCIATES®
1170 SOUTH HOUBOLT ROAD
JOLIET, ILLINOIS 60431
(815) 744-4200
IDFPR NO. 184-001273

USER NAME = codyh	DESIGNED - BRL	REVISED -	
	CHECKED - ELR	REVISED -	
PLOT SCALE = 0:2.0000 ':" / in.	DRAWN - CJH	REVISED -	
PLOT DATE = 9/25/2024	CHECKED - BRL	REVISED -	

STATE OF ILLINOIS
DEPARTMENT OF TRANSPORTATION

CONCRETE REMOVAL/REPAIR PIER 3
STRUCTURE NO. 016-0970 (SB)

SHEET 52 OF 73 SHEETS

F.A. RTE.	SECTION	COUNTY	TOTAL SHEETS	SHEET NO.
342	(531)BR 23	COOK	1211	870
		CONTRACT NO. 62W38		
	ILLINOIS	FED. AID PROJECT		

MODEL: Default
FILE NAME: S:\IDL\6300-6399\6246\113\Drawings\CAD\Micros-SS4\CAD_Sheets\0160370970-62W38-052-CRSPIER3.dgn
9/25/2024 7:55:08 AM

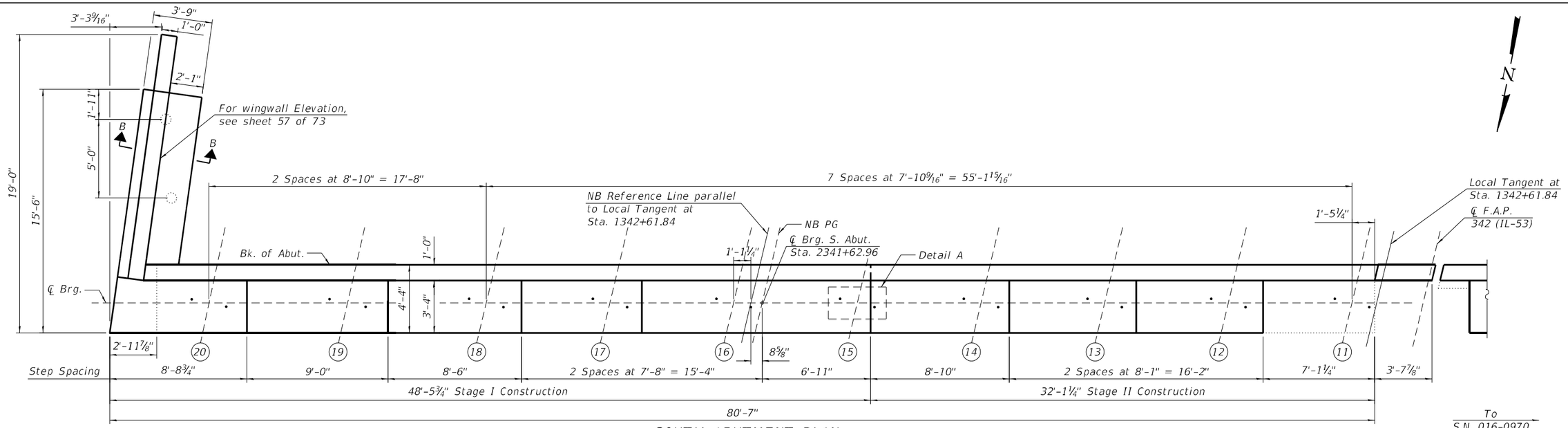

SOUTH ABUTMENT PLAN

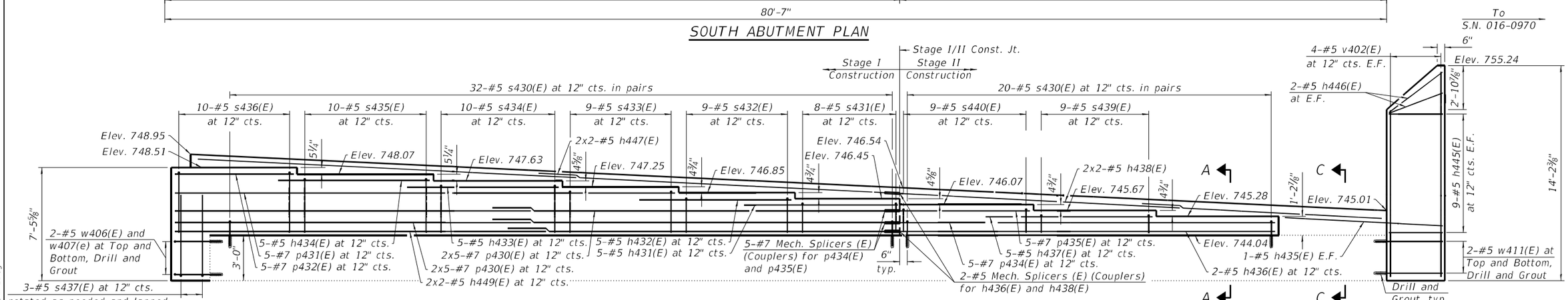

SOUTH ABUTMENT ELEVATION

(Looking South)

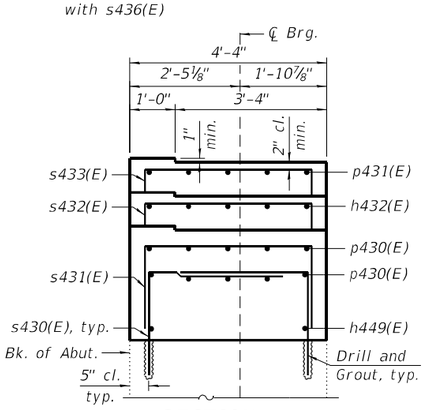

SECTION A-A

(Similar bars not shown for clarity)

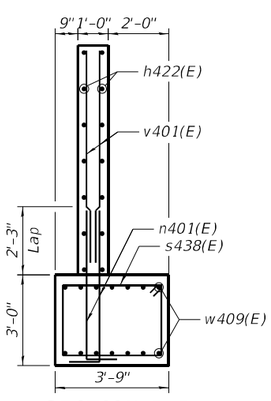

SECTION B-B

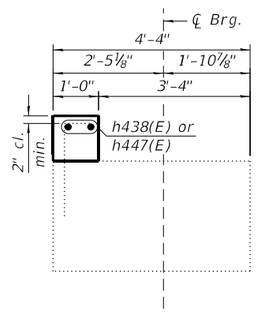

SECTION C-C

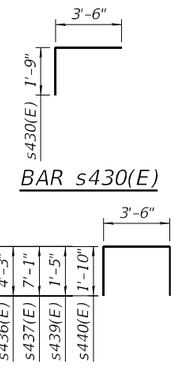

BAR s430(E)

BARS s431(E)-s437(E), s439(E), AND s440(E)

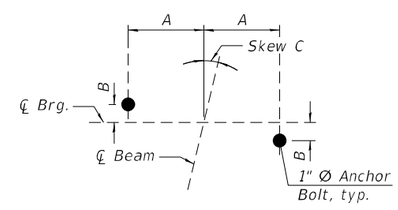

ANCHOR BOLT LOCATION DETAIL A

ANCHOR BOLT DIMENSION TABLE

Beamline	A	B	C
11-18	1'-1 1/8"	3 1/8"	3 3/4"
19	1'-1 3/16"	2 15/16"	3 9/16"
20	1'-1 3/16"	2 13/16"	3 7/16"

Notes:

1. Cost of drilling and grouting reinforcing bars included in cost of Concrete Structures.
2. Bars shall be drilled and set according to Article 584 of the Standard Specifications. Bars shall have a 9" minimum embedment depth.
3. Bars indicated thus 2x3-#5 etc. indicates 2 lines of bars with 3 lengths per line.
4. All construction joints between new and existing concrete shall be Bonded Construction Joints.
5. See sheet 28 of 73 for drainage details behind abutments.
6. See sheet 57 of 73 for Bill of Materials.
7. A film forming concrete sealer shall be applied to vertical surfaces to the designated area of all new and existing concrete.

STRAND ASSOCIATES
1170 SOUTH HOUBOLT ROAD
JOLIET, ILLINOIS 60431
(815) 744-4200
IDFPR NO. 184-001273

USER NAME = codyh	DESIGNED - BRL	REVISED -	
	CHECKED - ELR	REVISED -	
PLOT SCALE = 0:2.0000 ':" / in.	DRAWN - CJH	REVISED -	
PLOT DATE = 9/25/2024	CHECKED - BRL	REVISED -	

STATE OF ILLINOIS
DEPARTMENT OF TRANSPORTATION

ABUTMENT PLAN AND ELEVATION (1 OF 2)
STRUCTURE NO. 016-0373 (NB)

SHEET 53 OF 73 SHEETS

F.A. RTE.	SECTION	COUNTY	TOTAL SHEETS	SHEET NO.
342	(531)BR 23	COOK	1211	871

CONTRACT NO. 62W38

ILLINOIS | FED. AID PROJECT

MODEL: Default
FILE NAME: S:\IDL\6300-6399\6346\113\Drawings\CAD\Micros-SS4\CAD_Sheets\0160373097062W38-053-APE1.dgn
9/25/2024 7:55:10 AM

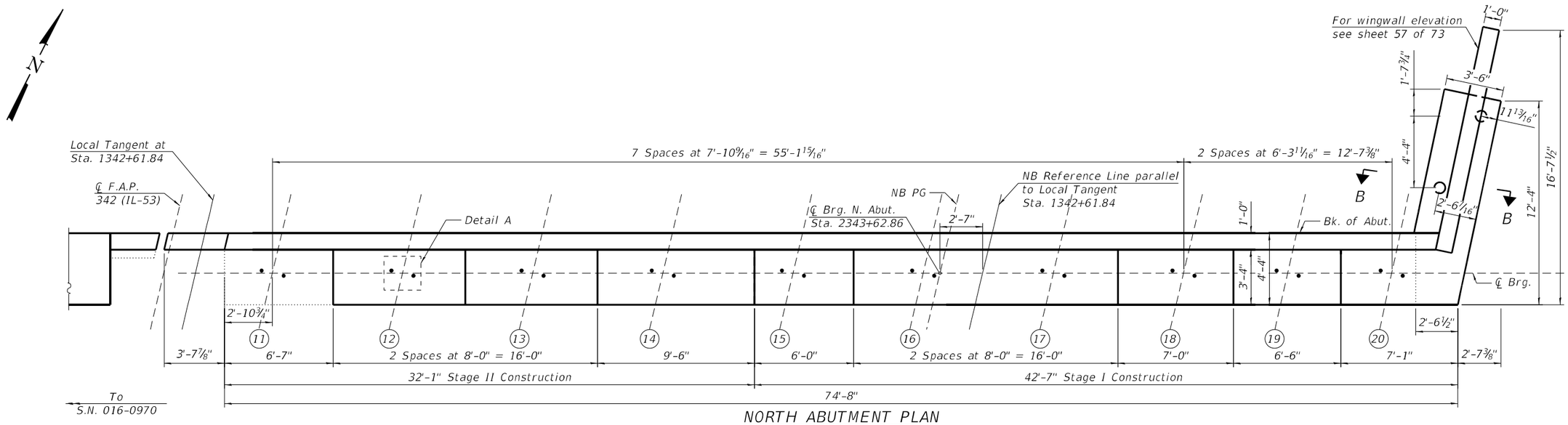

NORTH ABUTMENT PLAN

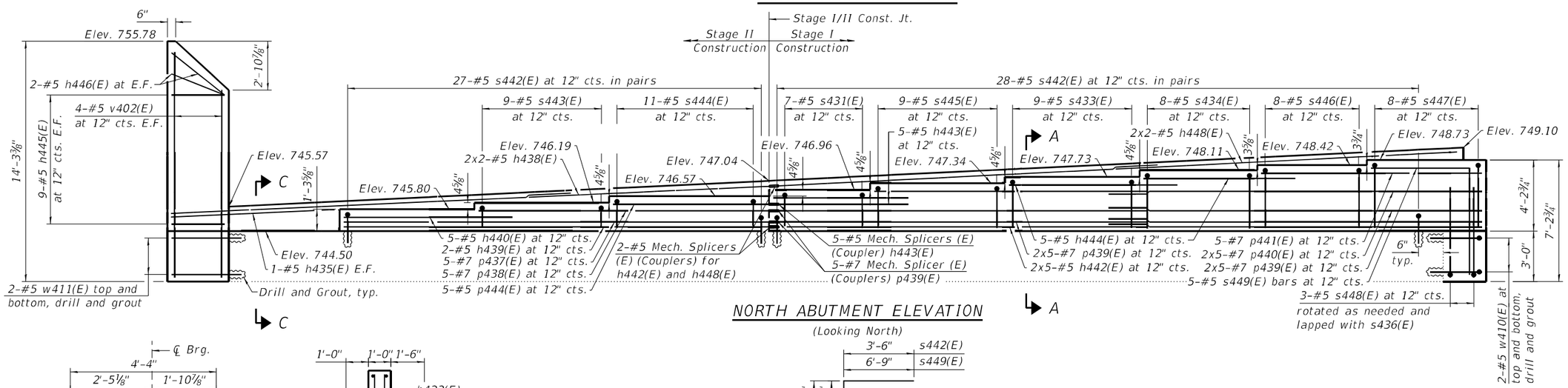

NORTH ABUTMENT ELEVATION

(Looking North)

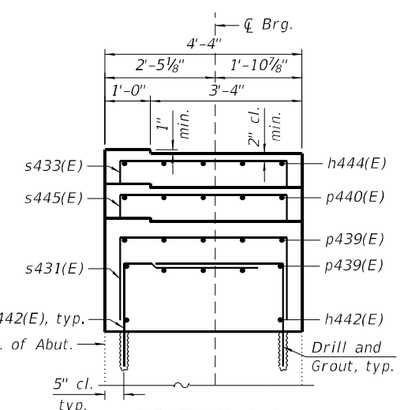

SECTION A-A

(Similar bars not shown for clarity)

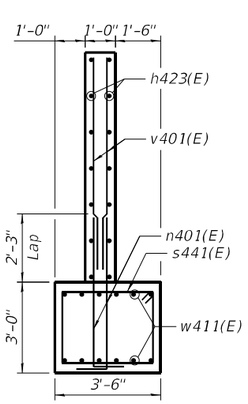

SECTION B-B

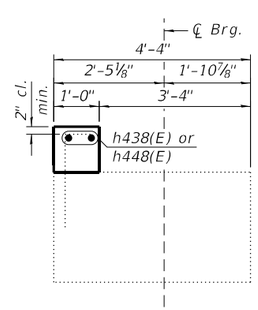

SECTION C-C

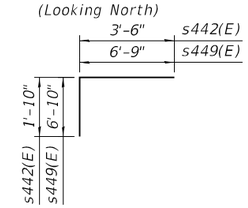

BAR s442(E) AND s449(E)

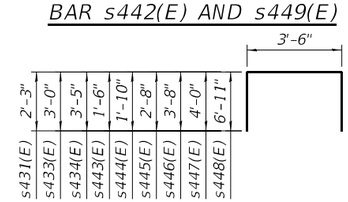

BARS s431(E), s433(E), s434(E), and s443(E)-s448(E)

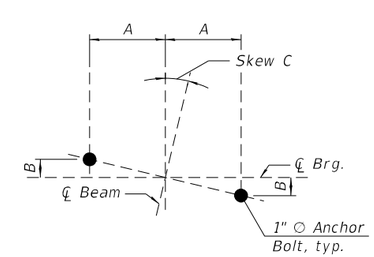

ANCHOR BOLT LOCATION PLAN DETAIL A

ANCHOR BOLT LAYOUT

Beamline	A	B	C
11-18	1'-1 1/8"	3 1/8"	13°24'15"
19	1'-1 13/16"	2 15/16"	12°41'54"
20	1'-1 3/16"	2 13/16"	11°59'18"

Notes:

1. Cost of drilling and grouting reinforcing bars included in cost of Concrete Structures.
2. Bars shall be drilled and set according to Article 584 of the Standard Specifications. Bars shall have a 9" minimum embedment depth.
3. Bars indicated thus 2x3-#5 etc. indicates 2 lines of bars with 3 lengths per line.
4. All construction joints between new and existing concrete shall be Bonded Construction Joints.
5. See sheet 28 of 73 for drainage details behind abutments.
6. See sheet 57 of 73 for Bill of Materials.
7. A film forming concrete sealer shall be applied to vertical surfaces to the designated area of all new and existing concrete.

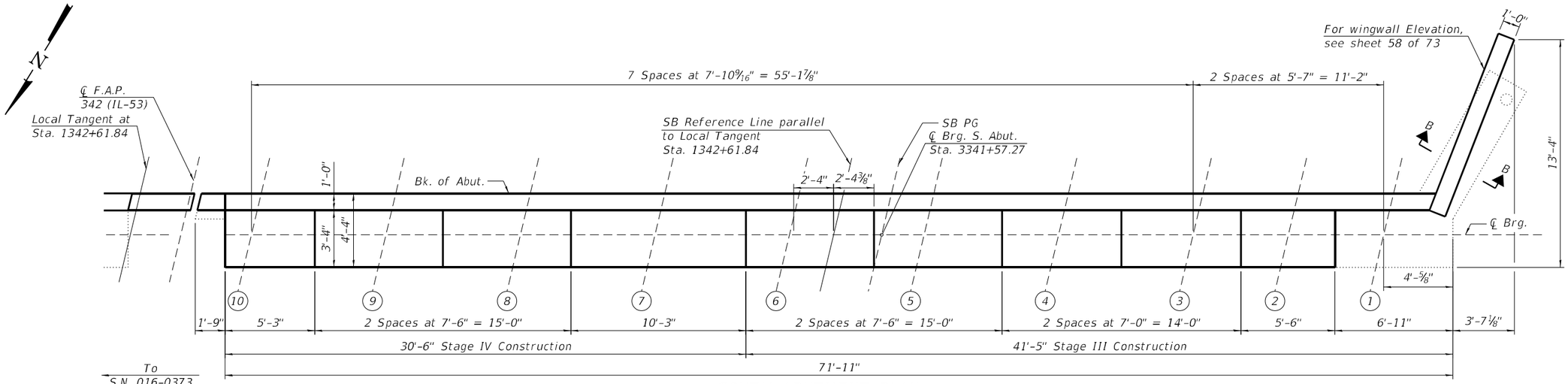

SOUTH ABUTMENT PLAN

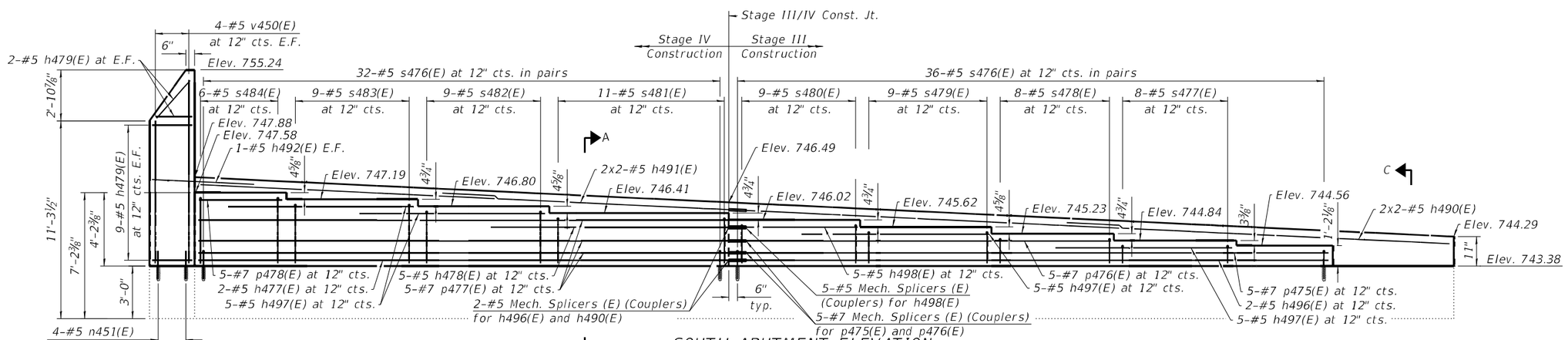

SOUTH ABUTMENT ELEVATION

(Looking South)

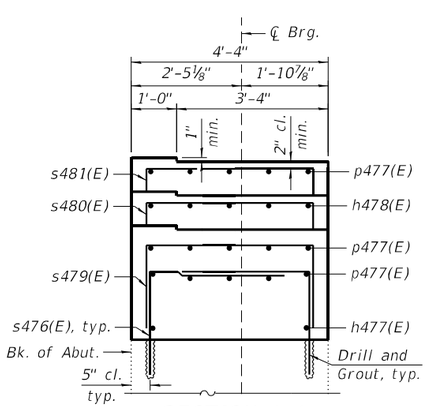

SECTION A-A

(Similar bars not shown for clarity)

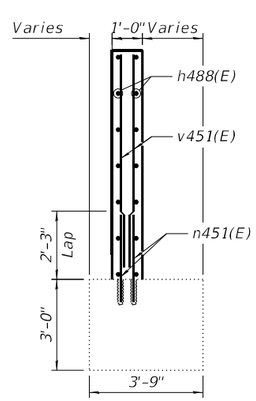

SECTION B-B

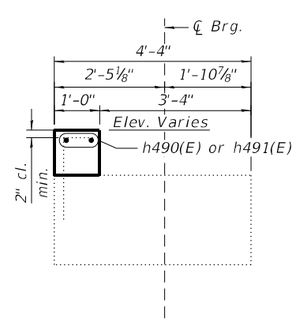

SECTION C-C

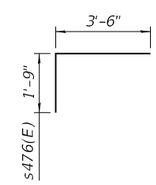

BAR s476(E)

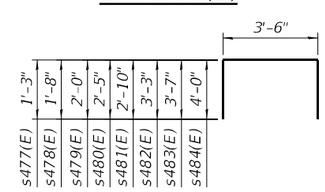

BARS s477(E)-s484(E)

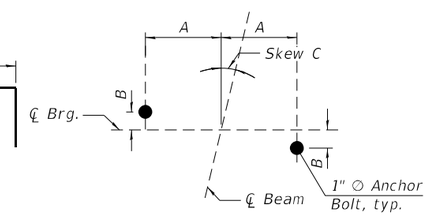

ANCHOR BOLT LOCATION DETAIL A

ANCHOR BOLT LAYOUT

Beamline	A	B	C
1	9 7/8"	2 1/8"	12°12'6"
2	9 7/8"	2 1/4"	12°48'16"
3-10	9 7/8"	2 3/8"	13°24'15"

Notes:

1. Cost of drilling and grouting reinforcing bars included in cost of Concrete Structures.
2. Bars shall be drilled and set according to Article 584 of the Standard Specifications. Bars shall have a 9" minimum embedment depth.
3. Bars indicated thus 2x3-#5 etc. indicates 2 lines of bars with 3 lengths per line.
4. All construction joints between new and existing concrete shall be Bonded Construction Joints.
5. See sheet 28 of 73 for drainage details behind abutments.
6. See sheet 58 of 73 for Bill of Materials.
7. A film forming concrete sealer shall be applied to vertical surfaces to the designated area of all new and existing concrete.

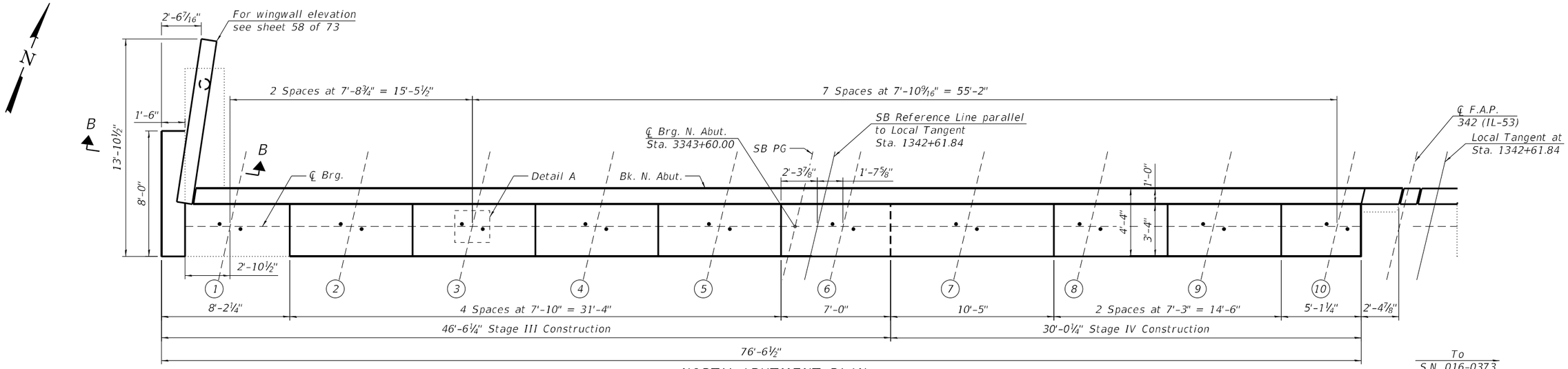

NORTH ABUTMENT PLAN

To
S.N. 016-0373

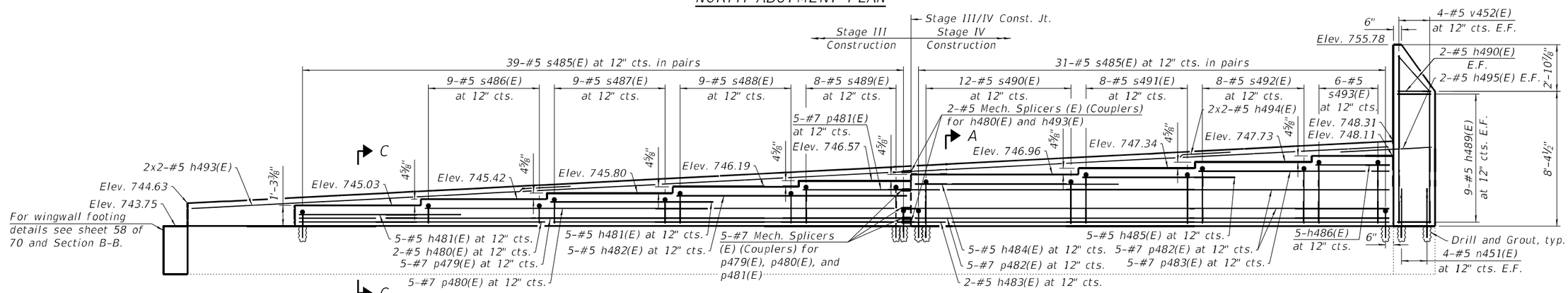

NORTH ABUTMENT ELEVATION

(Looking North)

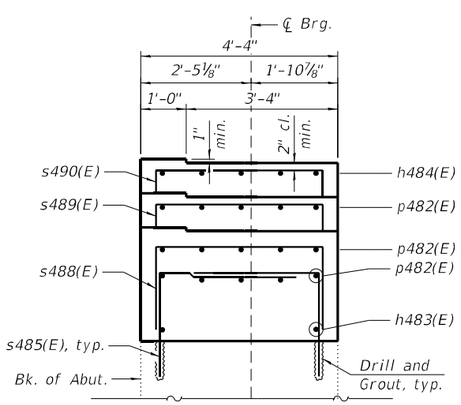

SECTION A-A

(Similar bars not shown
for clarity)

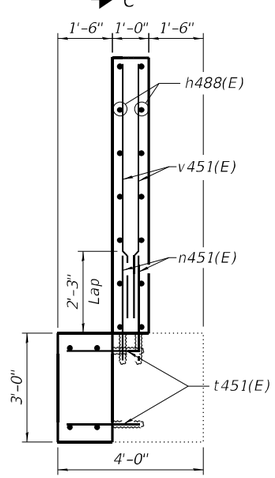

SECTION B-B

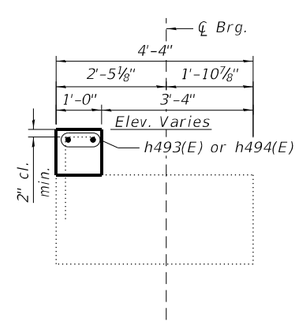

SECTION C-C

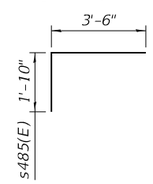

BAR s485(E)

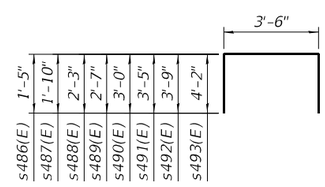

BARS s486(E)-s493(E)

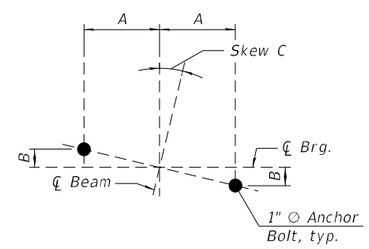

ANCHOR BOLT LOCATION
PLAN DETAIL A

ANCHOR BOLT LAYOUT

Beamline	A	B	C
1	9 7/8"	2 1/8"	12°12'6"
2	9 7/8"	2 1/4"	12°48'16"
3-10	9 7/8"	2 3/8"	13°24'15"

Notes:

1. Cost of drilling and grouting reinforcing bars included in cost of Concrete Structures.
2. Bars shall be drilled and set according to Article 584 of the Standard Specifications. Bars shall have a 9" minimum embedment depth.
3. Bars indicated thus 2x3-#5 etc. indicates 2 lines of bars with 3 lengths per line.
4. All construction joints between new and existing concrete shall be Bonded Construction Joints.
5. See sheet 28 of 73 for drainage details behind abutments.
6. See sheet 58 of 73 for Bill of Materials.
7. A film forming concrete sealer shall be applied to vertical surfaces to the designated area of all new and existing concrete.

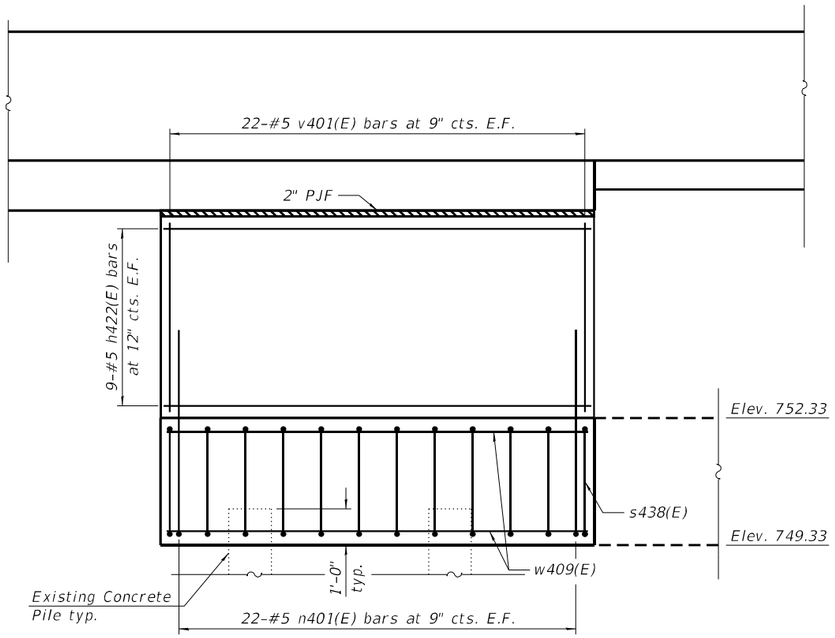

NB SOUTH WING WALL ELEVATION

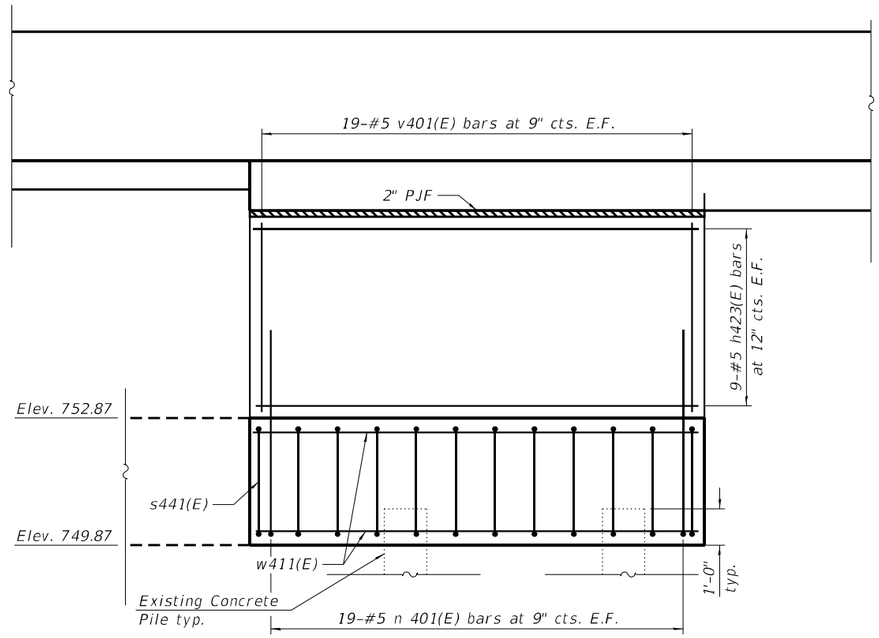

NB NORTH WING WALL ELEVATION

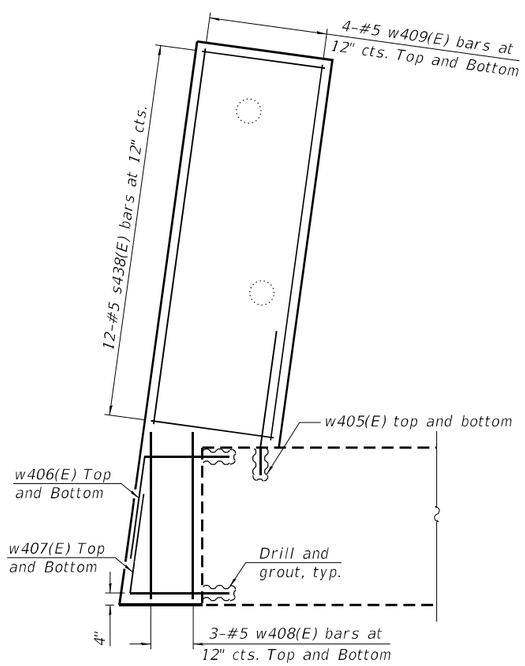

NB SOUTH WING WALL FOOTING PLAN

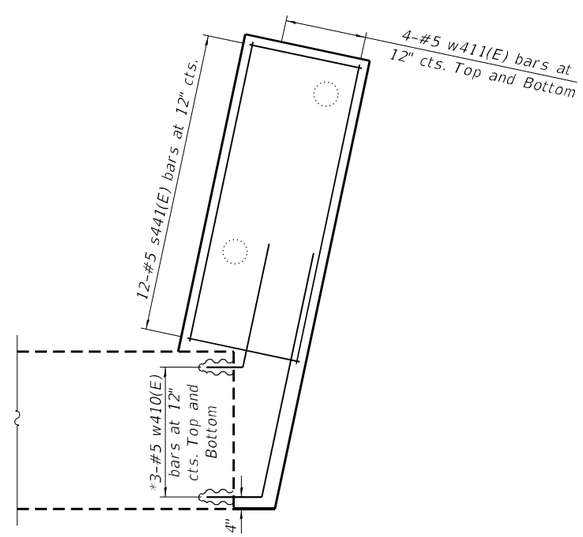

*cut dowel leg as needed for drill and grout

NB NORTH WING WALL FOOTING PLAN

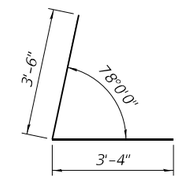

BAR w407(E)

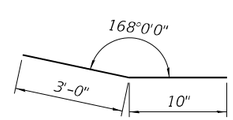

BAR w405(E)

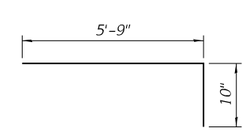

BAR n401(E)

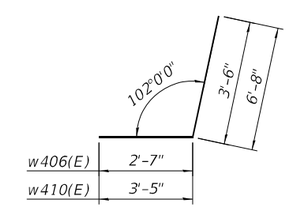

BARS w406(E), w410(E)

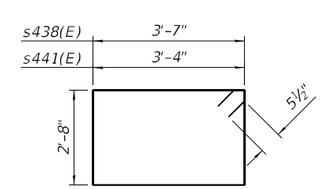

BAR s438(E), s441(E)

Notes:
1. Steel reinforcement should be adjusted to miss existing concrete piles.

NB ABUTMENT TOTAL BILL OF MATERIALS

Bar	No.	Size	Length	Shape
h422(E)	18	#5	15'-5"	
h423(E)	18	#5	13'-5"	
h431(E)	5	#5	10'-4"	
h432(E)	5	#5	11'-9"	
h433(E)	5	#5	8'-2"	
h434(E)	5	#5	7'-8"	
h435(E)	4	#5	6'-9"	
h436(E)	2	#5	24'-8"	
h437(E)	5	#5	11'-6"	
h438(E)	8	#5	17'-5"	
h439(E)	2	#5	7'-8"	
h440(E)	5	#5	25'-2"	
h441E)	5	#5	9'-2"	
h442(E)	4	#5	22'-8"	
h443(E)	10	#5	10'-1"	
h444(E)	10	#5	12'-1"	
h445(E)	36	#5	3'-4"	
h446(E)	8	#5	4'-2"	
h447(E)	4	#5	25'-7"	
h448(E)	4	#5	22'-8"	
h449(E)	4	#5	25'-7"	
n401(E)	84	#5	6'-7"	
p430(E)	20	#7	26'-2"	
p431(E)	5	#7	33'-7"	
p432(E)	5	#7	8'-5"	
p434(E)	5	#7	24'-8"	
p435(E)	5	#7	8'-6"	
p437(E)	5	#7	25'-2"	
p438(E)	5	#7	17'-2"	
p439(E)	20	#7	23'-3"	
p440(E)	10	#7	21'-6"	
p441(E)	5	#7	13'-3"	
s430(E)	52	#5	5'-3"	
s431(E)	15	#5	8'-0"	
s432(E)	9	#5	8'-8"	
s433(E)	18	#5	9'-6"	
s434(E)	18	#5	10'-4"	
s435(E)	10	#5	11'-2"	
s436(E)	10	#5	12'-0"	
s437(E)	3	#5	17'-8"	
s438(E)	12	#5	13'-5"	
s439(E)	9	#5	6'-4"	
s440(E)	10	#5	7'-2"	
s441(E)	11	#5	12'-11"	
s442(E)	55	#5	5'-4"	
s443(E)	9	#5	6'-6"	
s444(E)	11	#5	7'-2"	
s445(E)	9	#5	8'-10"	
s446(E)	8	#5	10'-10"	
s447(E)	8	#5	11'-6"	
s448(E)	3	#5	17'-4"	
s449(E)	5	#5	13'-7"	
v401(E)	82	#5	8'-2"	
v402(E)	16	#5	14'-2"	
w405(E)	2	#5	3'-10"	
w406(E)	2	#5	6'-1"	
w407(E)	2	#5	6'-10"	
w408(E)	6	#5	4'-6"	
w409(E)	8	#5	10'-5"	
w410(E)	6	#5	10'-1"	
w411(E)	8	#5	4'-3"	
Concrete Structures			CU YD	31.8
Reinforcement Bars, Epoxy Coated			POUND	10,020
Mechanical Splicers			EACH	33

STRAND ASSOCIATES
1170 SOUTH HOUBOLT ROAD
JOLIET, ILLINOIS 60431
(815) 744-4200
IDFPR NO. 184-001273

USER NAME = codyh	DESIGNED - TJE	REVISED -	
	CHECKED - BLR	REVISED -	
PLOT SCALE = 0:2.0000 ':" / in.	DRAWN - CJH	REVISED -	
PLOT DATE = 9/25/2024	CHECKED - BRL	REVISED -	

STATE OF ILLINOIS
DEPARTMENT OF TRANSPORTATION

WING WALL PLAN AND ELEVATION
STRUCTURE NO. 016-0373 (NB)

F.A. RTE.	SECTION	COUNTY	TOTAL SHEETS	SHEET NO.
342	(531)BR 23	COOK	1211	875

CONTRACT NO. 62W38
ILLINOIS | FED. AID PROJECT

MODEL: Default
FILE NAME: S:\IOL16300-63996346\113\Drawings\CAD\Micros-SS4\CAD_Sheets\0160373097D-62W38-057-NWWPE.dgn
9/25/2024 7:55:26 AM

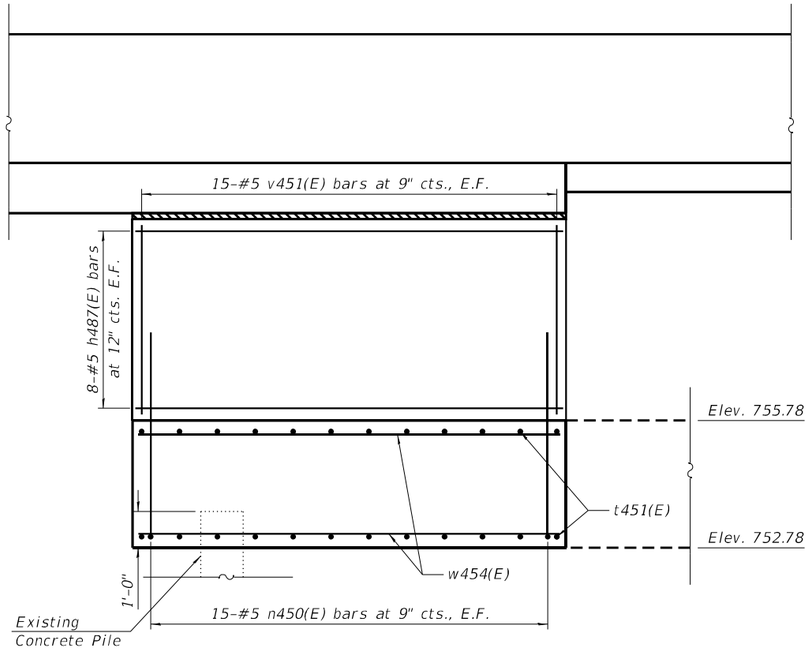

SB NORTH WING WALL ELEVATION

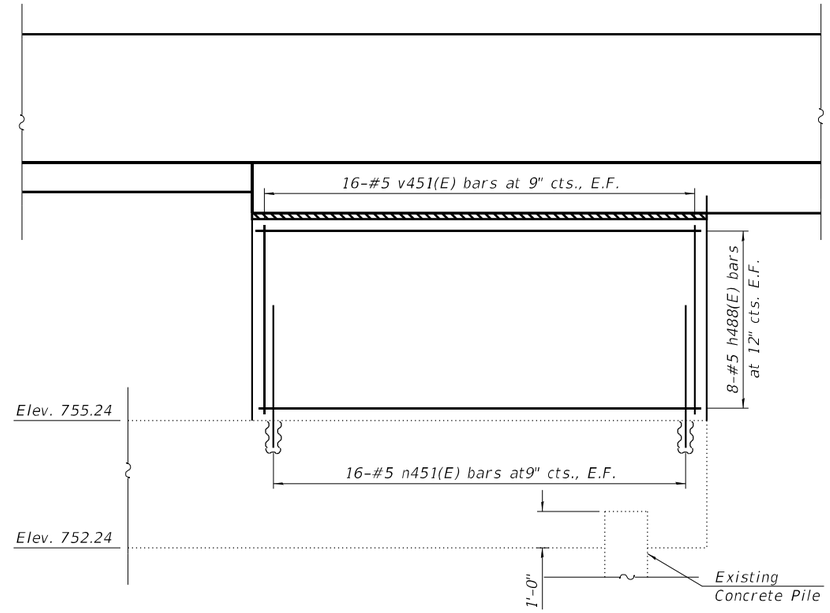

SB SOUTH WING WALL ELEVATION

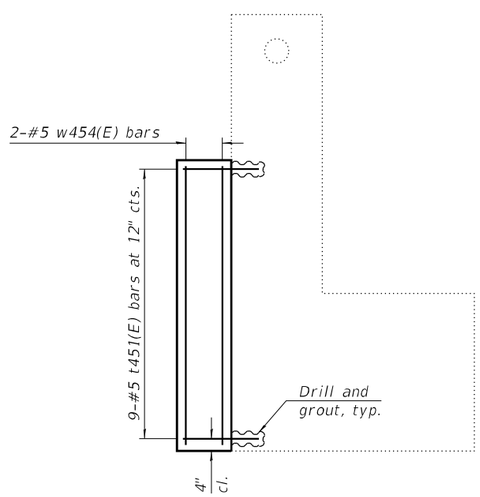

SB NORTH WING WALL FOOTING PLAN

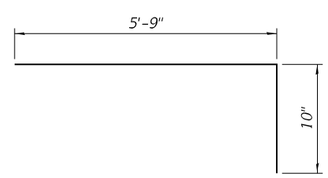

BAR n450(E)

SB ABUTMENT TOTAL BILL OF MATERIALS

Bar	No.	Size	Length	Shape
h477(E)	2	#5	30'-6"	
h478(E)	5	#5	13'-8"	
h479(E)	22	#5	1'-0"	
h480(E)	5	#5	11'-3"	
h481(E)	10	#5	30'-2"	
h482(E)	5	#5	14'-6"	
h483(E)	2	#5	30'-0"	
h484(E)	5	#5	13'-10"	
h485(E)	5	#5	10'-8"	
h486(E)	5	#5	8'-6"	
h487(E)	16	#5	10'-2"	
h488(E)	16	#5	10'-4"	
h489(E)	22	#5	2'-1"	
h490(E)	4	#5	22'-1"	
h491(E)	4	#5	16'-7"	
h492(E)	2	#5	4'-9"	
h493(E)	4	#5	24'-7"	
h494(E)	4	#5	16'-4"	
h495(E)	2	#5	5'-5"	
h496(E)	5	#5	34'-2"	
h497(E)	20	#5	10'-11"	
h498(E)	5	#5	7'-2"	
n450(E)	30	#5	6'-7"	
n451(E)	48	#5	3'-0"	
p475(E)	5	#7	34'-2"	
p476(E)	5	#7	21'-8"	
p477(E)	15	#7	17'-2"	
p478(E)	5	#7	4'-11"	
p479(E)	5	#7	38'-0"	
p480(E)	5	#7	30'-2"	
p481(E)	5	#7	6'-8"	
p482(E)	15	#7	16'-11"	
p483(E)	5	#7	12'-0"	
s476(E)	68	#5	5'-3"	
s477(E)	8	#5	6'-0"	
s478(E)	8	#5	6'-10"	
s479(E)	9	#5	7'-6"	
s480(E)	9	#5	8'-4"	
s481(E)	11	#5	9'-2"	
s482(E)	9	#5	10'-0"	
s483(E)	9	#5	10'-8"	
s484(E)	6	#5	11'-6"	
s485(E)	70	#5	5'-4"	
s486(E)	9	#5	6'-4"	
s487(E)	9	#5	7'-2"	
s488(E)	9	#5	8'-0"	
s489(E)	8	#5	8'-8"	
s490(E)	12	#5	9'-6"	
s491(E)	8	#5	10'-4"	
s492(E)	8	#5	11'-0"	
s493(E)	6	#5	11'-10"	
t451(E)	18	#5	2'-0"	
v451(E)	62	#5	7'-6"	
v452(E)	8	#5	10'-11"	
w454(E)	4	#5	7'-8"	
Concrete Structures			CU YD	18.1
Reinforcement Bars, Epoxy Coated			POUND	7,590
Mechanical Splicers			EACH	36

Notes:
1. Steel reinforcement should be adjusted to miss existing concrete piles.

STRAND ASSOCIATES®
1170 SOUTH HOUBOLT ROAD
JOLIET, ILLINOIS 60431
(815) 744-4200
IDFPR NO. 184-001273

USER NAME = codyh	DESIGNED - TJE	REVISED -	
	CHECKED - BRL	REVISED -	
PLOT SCALE = 0:2.0000 ':" / in.	DRAWN - CJH	REVISED -	
PLOT DATE = 9/25/2024	CHECKED - BRL	REVISED -	

STATE OF ILLINOIS
DEPARTMENT OF TRANSPORTATION

WING WALL PLAN AND ELEVATION
STRUCTURE NO. 016-0970 (SB)

SHEET 58 OF 73 SHEETS

F.A. RTE.	SECTION	COUNTY	TOTAL SHEETS	SHEET NO.
342	(531)BR 23	COOK	1211	876
		CONTRACT NO. 62W38		
	ILLINOIS	FED. AID PROJECT		

MODEL: Default
FILE NAME: S:\OL\6300-6399\6346\113\Drawings\CAD\Micro-SS4\CAD_Sheets\0160373097O-62W38-058-SWWPE.dgn
9/25/2024 7:55:34 AM

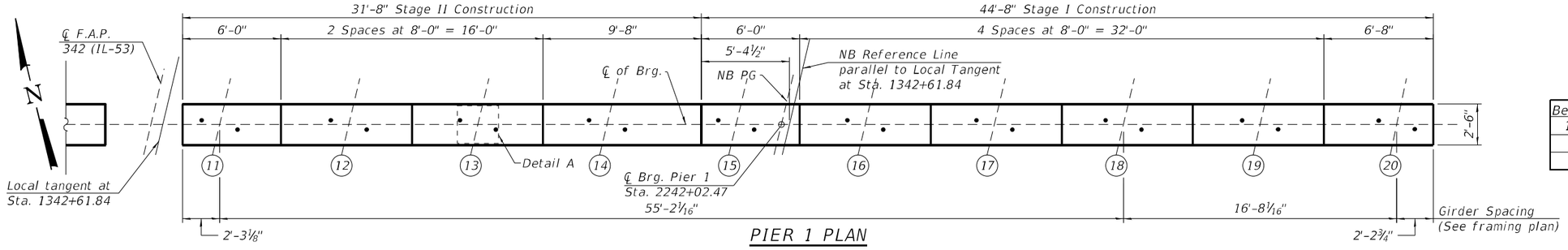

PIER 1 PLAN

ANCHOR BOLT LAYOUT

Beamline	A	B	C	D
11-18	1'-1 1/8"	3 1/8"	3 3/4"	13°24'15"
19	1'-1 3/16"	2 15/16"	3 9/16"	12°41'54"
20	1'-1 3/16"	2 13/16"	3 7/16"	11°59'18"

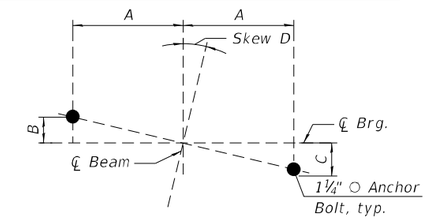

ANCHOR BOLT LOCATION PLAN DETAIL A

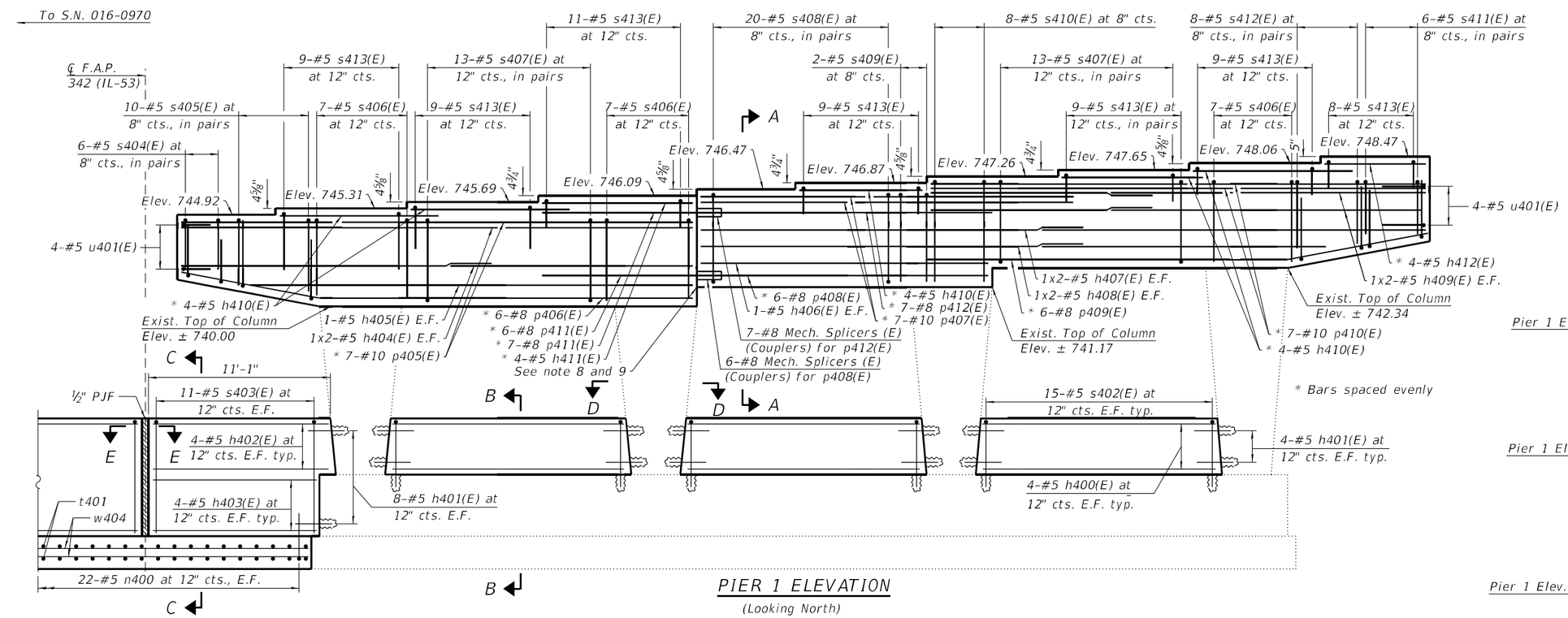

PIER 1 ELEVATION

(Looking North)

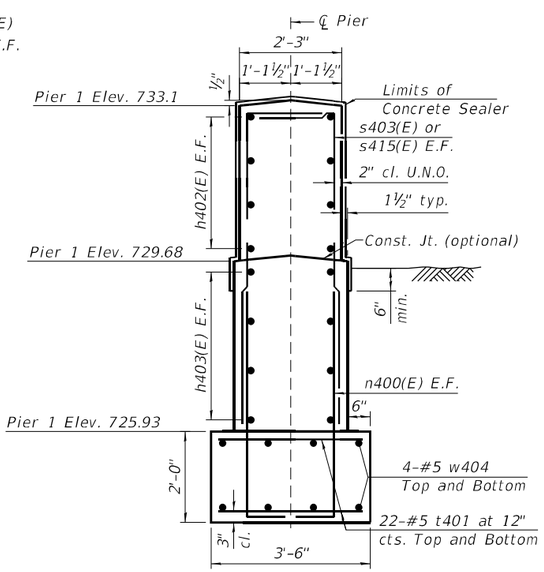

SECTION C-C

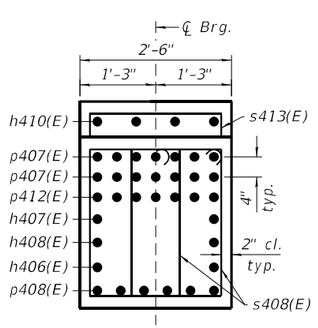

SECTION A-A

(Similar bars not shown for clarity)

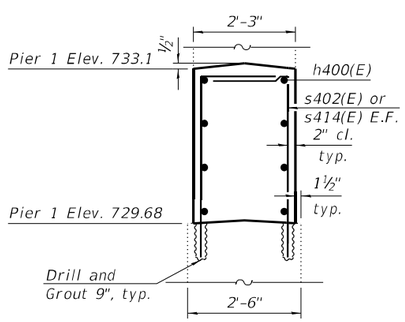

SECTION B-B

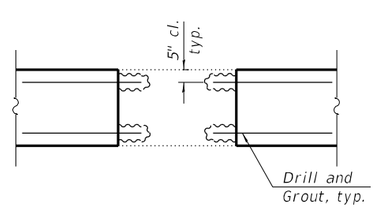

SECTION D-D

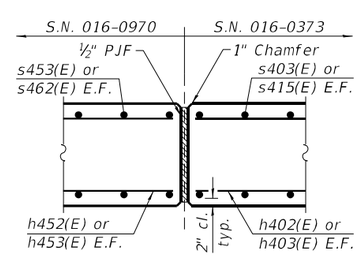

SECTION E-E

Notes:

1. Cost of drilling and grouting reinforcing bars included in cost for Concrete Structures.
2. Bars shall be drilled and set according to Article 584 of the Standard Specifications. Bars shall have a 9" minimum embedment depth.
3. All construction joints between new and existing concrete shall be Bonded Construction Joints.
4. A film forming concrete sealer shall be applied to vertical and horizontal surfaces to the designated area of all new and existing concrete.
5. Space reinforcement in cap to miss anchor bolts.
6. See sheet 3 of 73 for Offset Sketch.
7. Existing bars in column reincorporated into design. See sheet 47 of 73 for details.
8. See sheet 62 of 73 for bar diagrams, Bill of Materials, and Temporary Shoring detail.
9. Temporary Shoring should be in place before the beams are set.

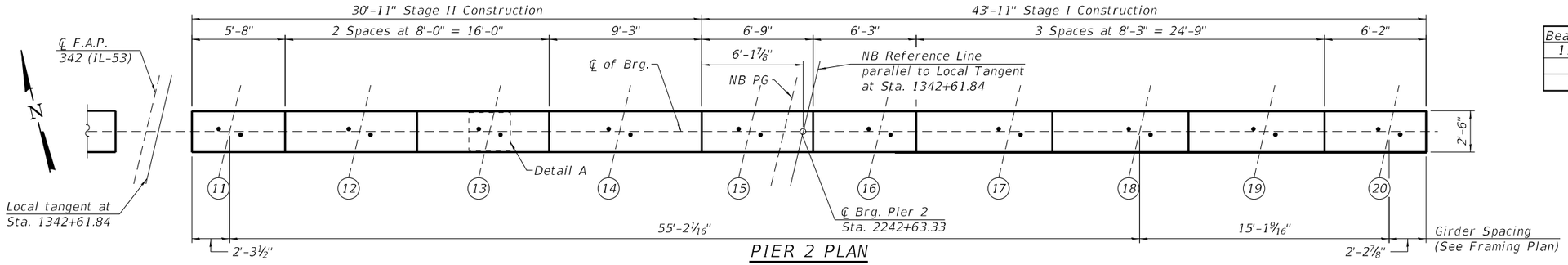

PIER 2 PLAN

ANCHOR BOLT LAYOUT

Beamline	A	B	C	D
11-18	7 15/16"	1 7/8"	2 3/8"	13°24'15"
19	8"	1 13/16"	2 5/16"	12°41'54"
20	8"	1 11/16"	2 3/16"	11°59'18"

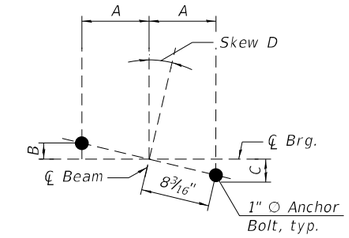

ANCHOR BOLT LOCATION PLAN DETAIL A

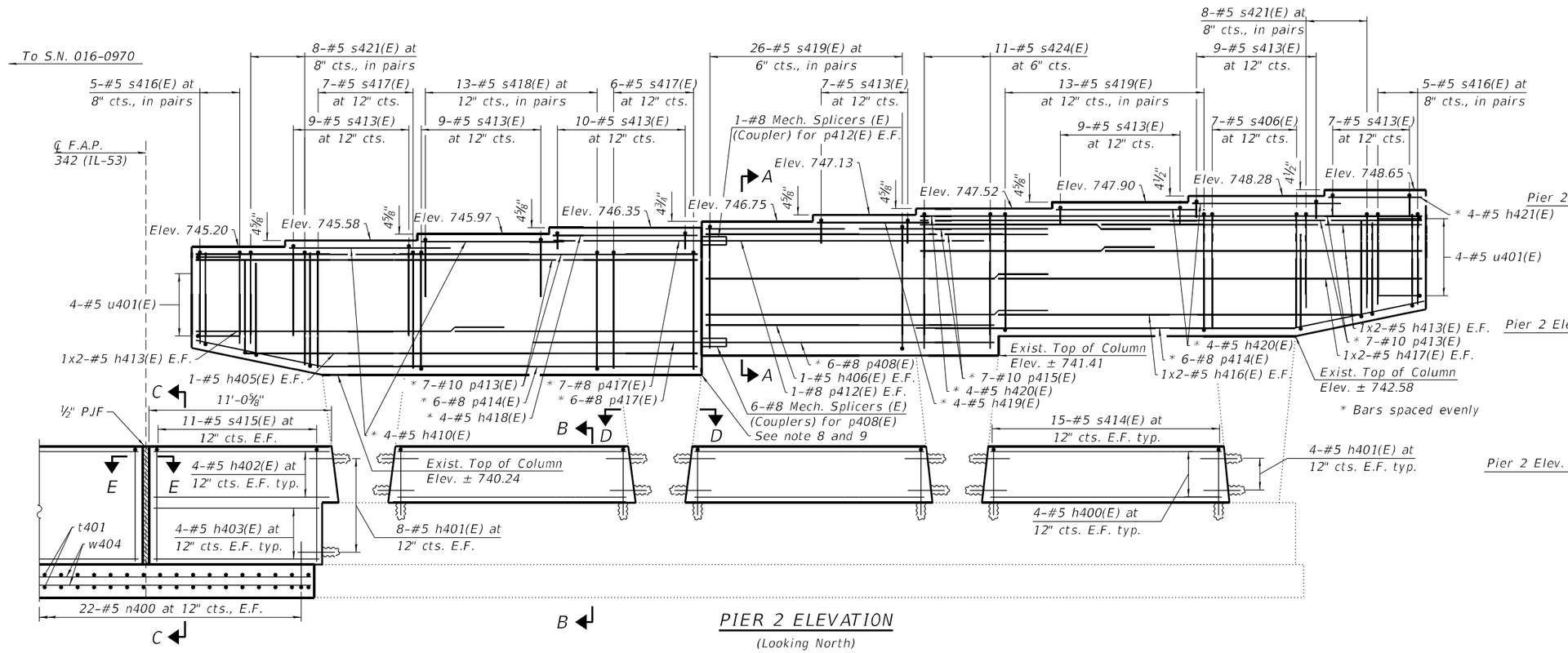

PIER 2 ELEVATION

(Looking North)

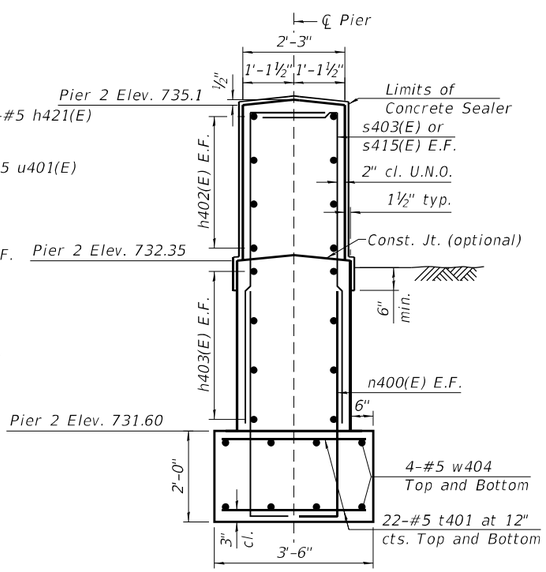

SECTION C-C

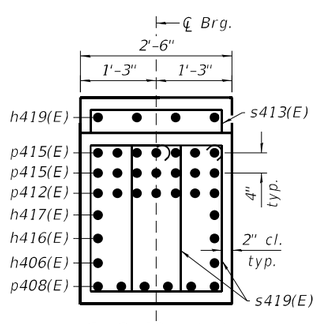

SECTION A-A

(Similar bars not shown for clarity)

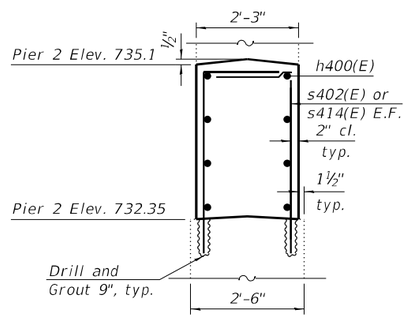

SECTION B-B

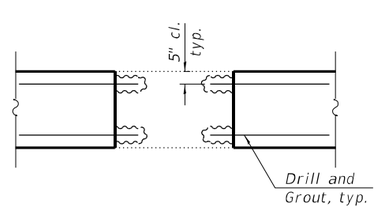

SECTION D-D

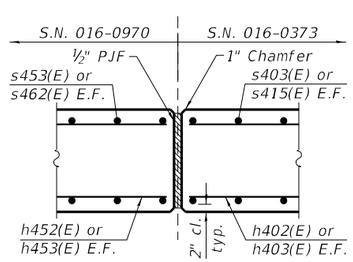

SECTION E-E

Notes:

1. Cost of drilling and grouting reinforcing bars included in cost for Concrete Structures.
2. Bars shall be drilled and set according to Article 584 of the Standard Specifications. Bars shall have a 9" minimum embedment depth.
3. All construction joints between new and existing concrete shall be Bonded Construction Joints.
4. A film forming concrete sealer shall be applied to vertical and horizontal surfaces to the designated area of all new and existing concrete.
5. Space reinforcement in cap to miss anchor bolts.
6. See sheet 3 of 73 for Offset Sketch.
7. Existing bars in column reincorporated into design. See sheet 47 of 73 for details.
8. See sheet 62 of 73 for bar diagrams, Bill of Materials, and Temporary Shoring detail.
9. Temporary Shoring should be in place before the beams are set.

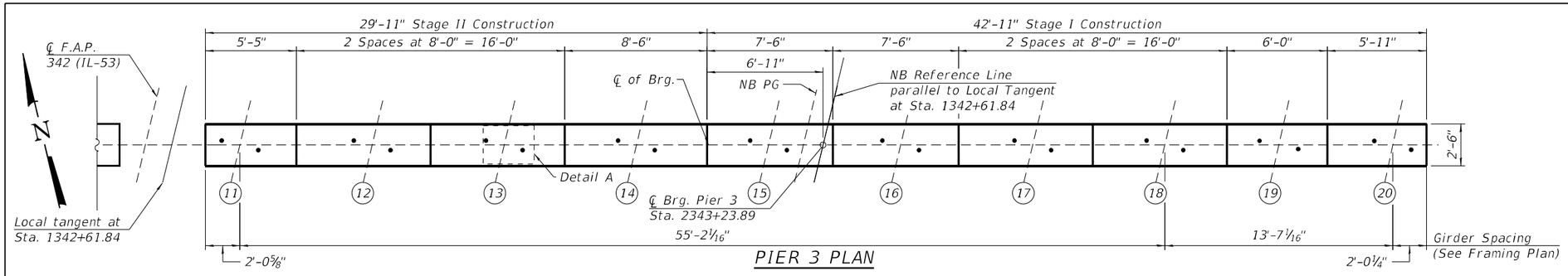

PIER 3 PLAN

ANCHOR BOLT LAYOUT

Beamline	A	B	C	D
11-18	1'-1 1/8"	3 1/8"	3 3/4"	13°24'15"
19	1'-1 3/16"	2 15/16"	3 9/16"	12°41'54"
20	1'-1 3/16"	2 13/16"	3 7/16"	11°59'18"

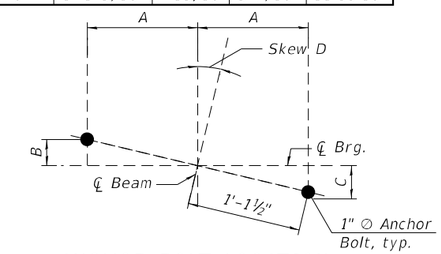

ANCHOR BOLT LOCATION
PLAN DETAIL A

To S.N. 016-0970

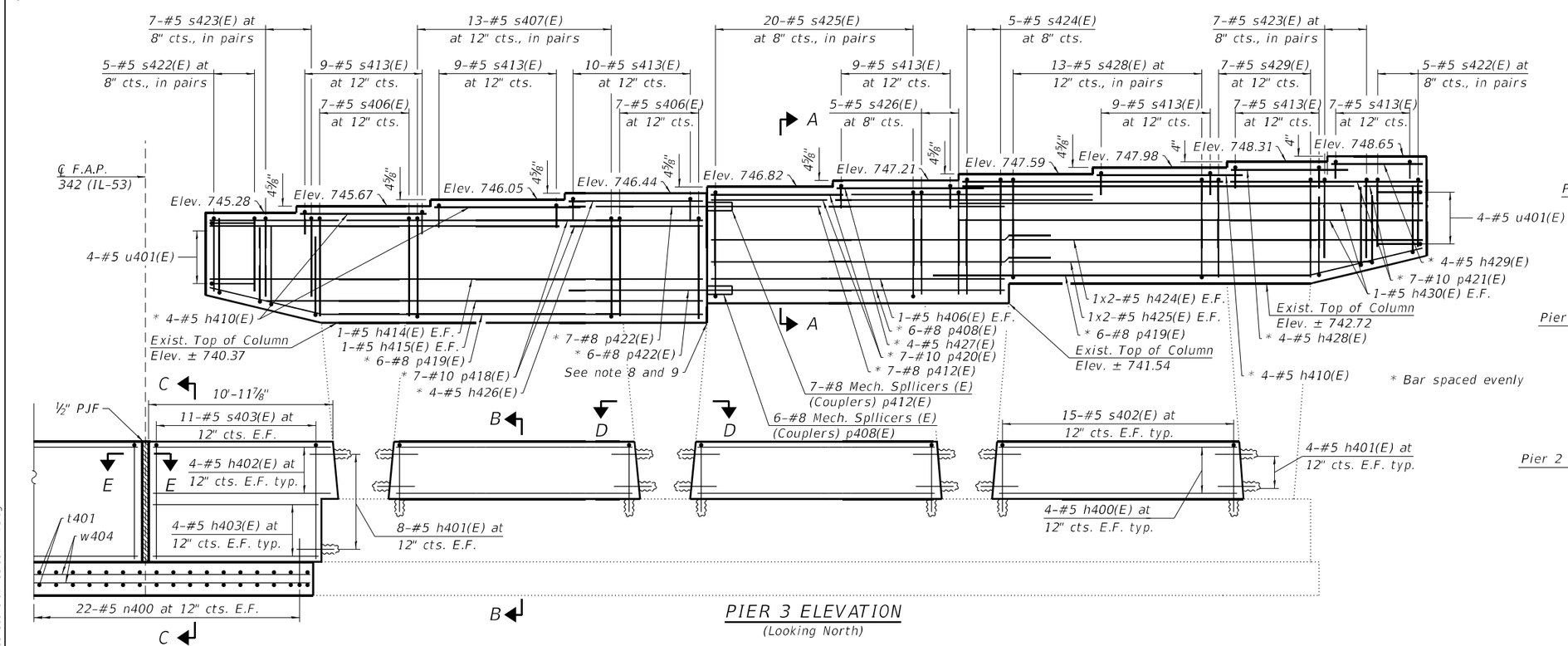

PIER 3 ELEVATION
(Looking North)

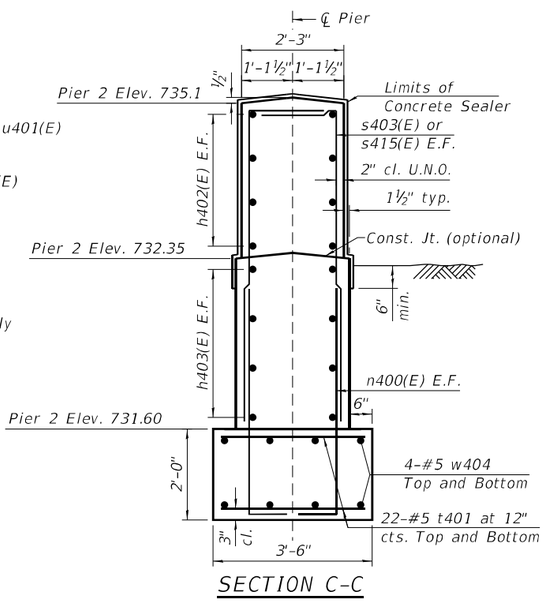

SECTION C-C

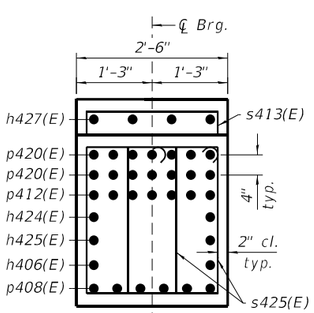

SECTION A-A
(Similar bars not shown for clarity)

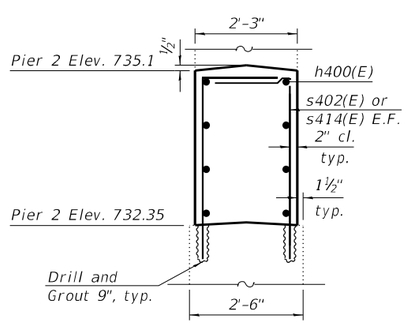

SECTION B-B

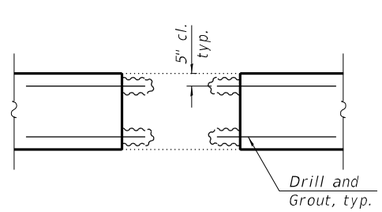

SECTION D-D

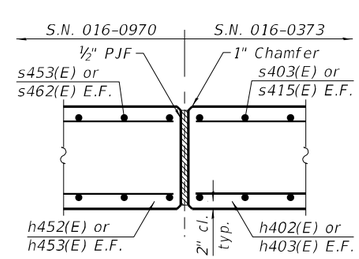

SECTION E-E

Notes:

1. Cost of drilling and grouting reinforcing bars included in cost for Concrete Structures.
2. Bars shall be drilled and set according to Article 584 of the Standard Specifications. Bars shall have a 9" minimum embedment depth.
3. All construction joints between new and existing concrete shall be Bonded Construction Joints.
4. A film forming concrete sealer shall be applied to vertical and horizontal surfaces to the designated area of all new and existing concrete.
5. Space reinforcement in cap to miss anchor bolts.
6. See sheet 3 of 73 for Offset Sketch.
7. Existing bars in column reincorporated into design. See sheet 47 of 73 for details.
8. See sheet 62 of 73 for bar diagrams, Bill of Materials, and Temporary Shoring detail.
9. Temporary Shoring should be in place before the beams are set.

PIER 1 BILL OF MATERIALS

Bar	No.	Size	Length	Shape
h400(E)	24	#5	14'-0"	
h401(E)	64	#5	3'-8"	
h402(E)	8	#5	10'-8"	
h403(E)	8	#5	10'-0"	
h404(E)	4	#5	20'-2"	
h405(E)	2	#5	26'-8"	
h406(E)	2	#5	17'-8"	
h407(E)	4	#5	23'-8"	
h408(E)	4	#5	21'-6"	
h409(E)	8	#5	16'-8"	
h410(E)	20	#5	9'-8"	
h411(E)	4	#5	9'-4"	
h412(E)	4	#5	6'-4"	
n400(E)	44	#5	5'-9"	
p405(E)	14	#10	31'-8"	
p406(E)	6	#8	31'-8"	
p407(E)	14	#10	29'-8"	
p408(E)	6	#8	17'-8"	
p409(E)	6	#8	30'-4"	
p410(E)	14	#10	30'-4"	
p411(E)	13	#8	9'-6"	
p412(E)	7	#8	20'-0"	
s402(E)	90	#5	5'-10"	
s403(E)	22	#5	8'-8"	
s404(E)	12	#5	8'-2"	
s405(E)	20	#5	9'-7"	
s406(E)	21	#5	11'-4"	
s407(E)	52	#5	13'-5"	
s408(E)	40	#5	14'-2"	
s409(E)	2	#5	12'-1"	
s410(E)	8	#5	13'-8"	
s411(E)	12	#5	8'-1"	
s412(E)	16	#5	9'-7"	
s413(E)	64	#5	5'-2"	
t401(E)	44	#5	3'-2"	
u401(E)	8	#5	6'-0"	
w404(E)	8	#5	19'-4"	
Concrete Structures			CU YD	60.6
Concrete Sealer			SQ FT	971
Reinforcement Bars, Epoxy Coated			POUND	13,020
Mechanical Splicers			EACH	13
Temporary Shoring			EACH	1

PIER 2 BILL OF MATERIALS

Bar	No.	Size	Length	Shape
h400(E)	24	#5	14'-0"	
h401(E)	64	#5	3'-8"	
h402(E)	8	#5	10'-8"	
h403(E)	8	#5	10'-0"	
h405(E)	2	#5	26'-8"	
h406(E)	2	#5	17'-8"	
h410(E)	8	#5	9'-8"	
h413(E)	12	#5	16'-10"	
h416(E)	4	#5	21'-4"	
h417(E)	4	#5	23'-4"	
h418(E)	4	#5	8'-11"	
h419(E)	4	#5	7'-11"	
h420(E)	8	#5	9'-11"	
h421(E)	4	#5	5'-10"	
n400(E)	44	#5	5'-9"	
p408(E)	6	#8	17'-8"	
p412(E)	7	#8	20'-0"	
p413(E)	28	#10	30'-7"	
p414(E)	12	#8	30'-7"	
p415(E)	14	#10	20'-11"	
p417(E)	13	#8	8'-11"	
s406(E)	7	#5	11'-4"	
s413(E)	60	#5	5'-2"	
s414(E)	90	#5	5'-2"	
s415(E)	22	#5	8'-2"	
s416(E)	20	#5	8'-2"	
s417(E)	13	#5	11'-6"	
s418(E)	26	#5	13'-7"	
s419(E)	78	#5	14'-3"	
s420(E)	11	#5	13'-9"	
s421(E)	32	#5	9'-8"	
t401(E)	44	#5	3'-2"	
u401(E)	8	#5	6'-0"	
w404(E)	8	#5	19'-4"	
Concrete Structures			CU YD	59.4
Concrete Sealer			SQ FT	953
Reinforcement Bars, Epoxy Coated			POUND	12,440
Mechanical Splicers			EACH	13
Temporary Shoring			EACH	1

PIER 3 BILL OF MATERIALS

Bar	No.	Size	Length	Shape
h400(E)	24	#5	14'-0"	
h401(E)	64	#5	3'-8"	
h402(E)	8	#5	10'-8"	
h403(E)	8	#5	10'-0"	
h406(E)	2	#5	17'-8"	
h410(E)	12	#5	9'-8"	
h414(E)	2	#5	29'-7"	
h415(E)	2	#5	25'-3"	
h424(E)	4	#5	22'-10"	
h425(E)	4	#5	20'-7"	
h426(E)	4	#5	8'-2"	
h427(E)	4	#5	9'-2"	
h428(E)	4	#5	7'-8"	
h429(E)	4	#5	5'-7"	
h430(E)	2	#5	27'-7"	
n400(E)	44	#5	5'-9"	
p408(E)	6	#8	17'-8"	
p412(E)	7	#8	20'-0"	
p418(E)	14	#10	29'-7"	
p419(E)	12	#8	29'-7"	
p420(E)	14	#10	32'-4"	
p421(E)	14	#10	27'-7"	
p422(E)	13	#8	8'-4"	
s402(E)	90	#5	5'-10"	
s403(E)	22	#5	8'-8"	
s406(E)	14	#5	11'-4"	
s407(E)	26	#5	13'-5"	
s413(E)	60	#5	5'-2"	
s422(E)	10	#5	7'-8"	
s423(E)	14	#5	9'-1"	
s424(E)	5	#5	13'-7"	
s425(E)	40	#5	14'-1"	
s426(E)	5	#5	12'-0"	
s428(E)	26	#5	13'-3"	
s429(E)	7	#5	11'-2"	
t401(E)	44	#5	3'-2"	
u401(E)	8	#5	6'-0"	
w404(E)	8	#5	19'-4"	
Concrete Structures			CU YD	58.1
Concrete Sealer			SQ FT	930
Reinforcement Bars, Epoxy Coated			POUND	12,290
Mechanical Splicers			EACH	13
Temporary Shoring			EACH	1

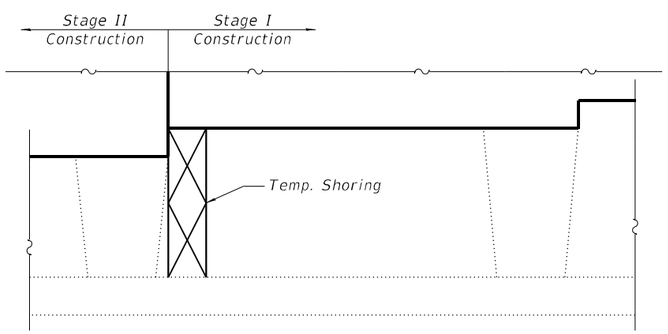

TEMPORARY SHORING DETAIL

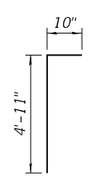

BAR n400(E)

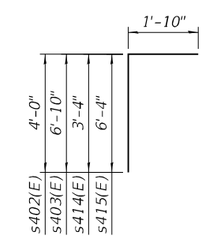

BARS s402(E), s403(E), s414(E), and s415(E)

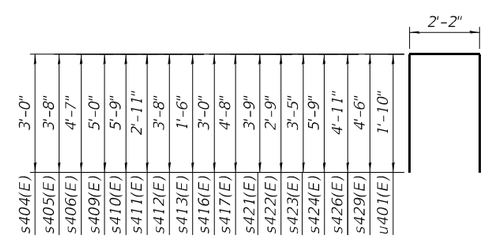

BARS s404(E)-s406(E), s409(E)-s413(E), s416(E), s417(E), s421(E)-s424(E), s426(E), s429(E), and u401(E)

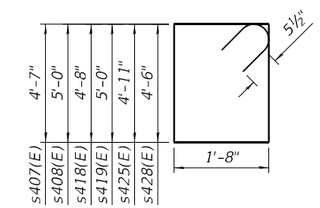

BARS s407(E), s408(E), s418 (E), s425(E), and s428(E)

MODEL: Default
FILE NAME: S:\IOL\16300-63996346\113\Drawings\CAD\Micro-SSA\CAD_Sheets\0160373097O-62W38-062-PMD4.dgn

STRAND ASSOCIATES
1170 SOUTH HOUBOLT ROAD
JOLIET, ILLINOIS 60431
(815) 744-4200
IDFPR NO. 184-001273

USER NAME = codyh	DESIGNED - BRL	REVISED -	
	CHECKED - NDR	REVISED -	
PLOT SCALE = 0:2.0000 ':" / in.	DRAWN - CJH	REVISED -	
PLOT DATE = 9/25/2024	CHECKED - BRL	REVISED -	

9/25/2024 7:55:59 AM

STATE OF ILLINOIS
DEPARTMENT OF TRANSPORTATION

PIER MODIFICATION DETAILS AND TABLES
STRUCTURE NO. 016-0373 (NB)

SHEET 62 OF 73 SHEETS

F.A. RTE.	SECTION	COUNTY	TOTAL SHEETS	SHEET NO.
342	(531)BR 23	COOK	1211	880
		CONTRACT NO. 62W38		
	ILLINOIS	FED. AID PROJECT		

ANCHOR BOLT LAYOUT

Beamline	A	B	C	D
1	1'-1 3/16"	2 7/8"	3 1/2"	12°12'6"
2	1'-1 3/16"	3"	3 5/8"	12°48'16"
3-10	1'-1 1/8"	3 1/8"	3 3/4"	13°24'15"

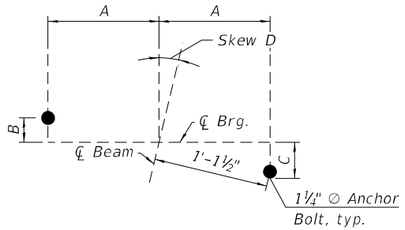

ANCHOR BOLT LOCATION PLAN DETAIL A

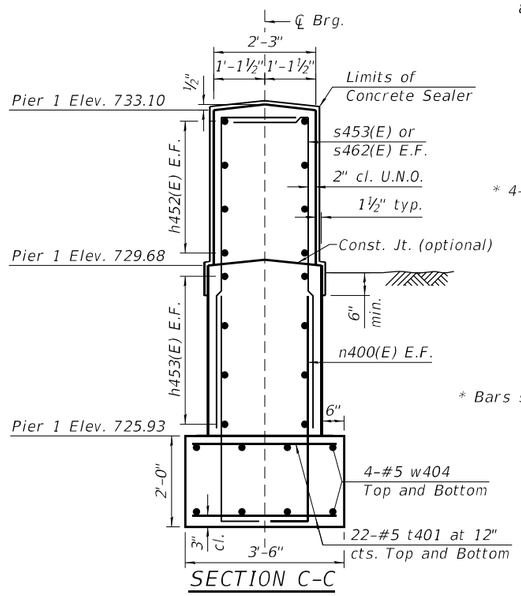

* Bars spaced evenly

SECTION C-C

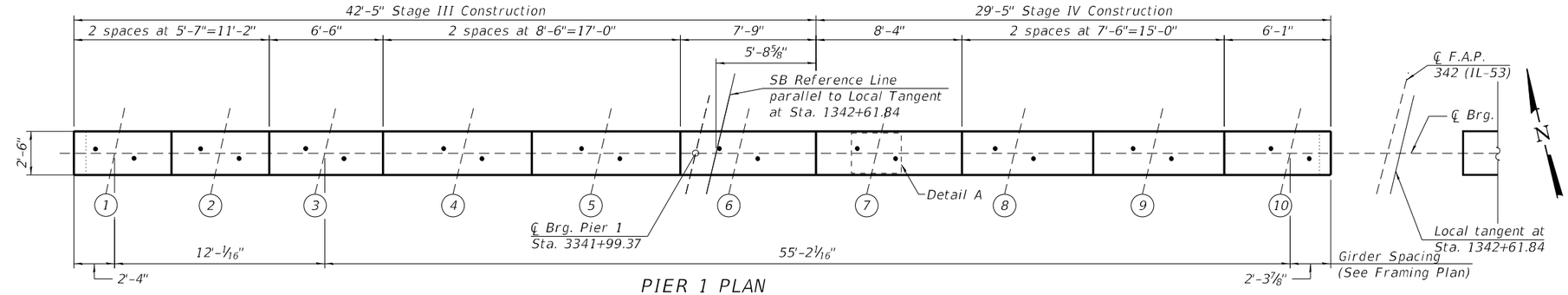

PIER 1 PLAN

To S.N. 016-0373

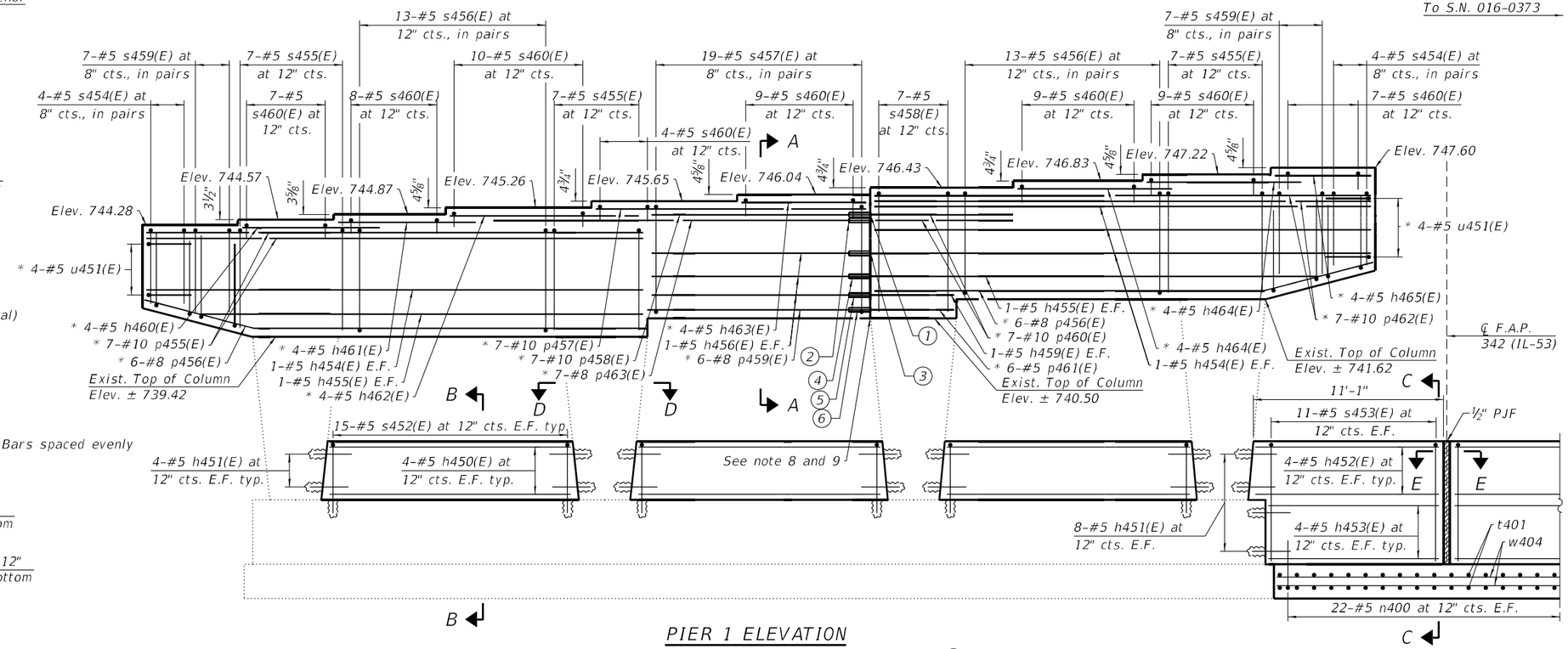

PIER 1 ELEVATION

(Looking North)

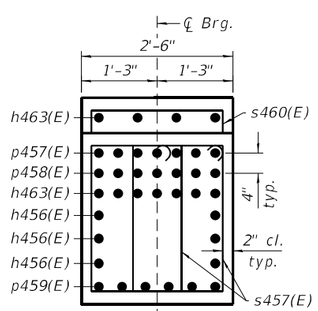

SECTION A-A

(Similar bars not shown for clarity)

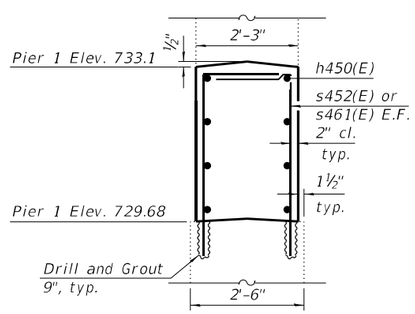

SECTION B-B

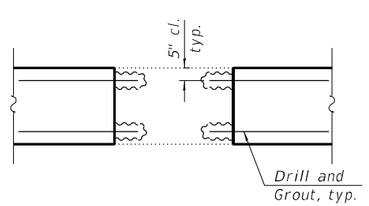

SECTION D-D

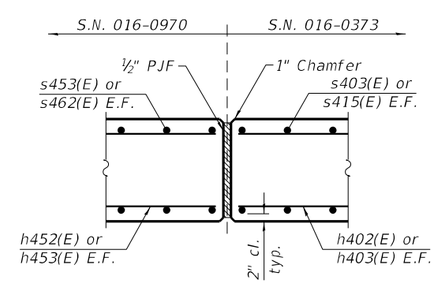

SECTION E-E

1. 7-#10 Mech. Splicers (E) (Couplers) for p457(E)
2. 7-#10 Mech. Splicers (E) (Couplers) for p458(E)
3. 2-#5 Mech. Splicers (E) (Couplers) for h456(E)
4. 2-#5 Mech. Splicers (E) (Couplers) for h456(E)
5. 2-#5 Mech. Splicers (E) (Couplers) for h456(E)
6. 6-#8 Mech. Splicers (E) (Couplers) for p459(E)

Notes:

1. Cost of drilling and grouting reinforcing bars included in cost for Concrete Structures.
2. Bars shall be drilled and set according to Article 584 of the Standard Specifications. Bars shall have a 9" minimum embedment depth.
3. All construction joints between new and existing concrete shall be Bonded Construction Joints.
4. A film forming concrete sealer shall be applied to vertical and horizontal surfaces to the designated area of all new and existing concrete.
5. Space reinforcement in cap to miss anchor bolts.
6. See sheet 3 of 73 for Offset Sketch.
7. Existing bars in column reincorporated into design. See sheet 47 of 73 for details.
8. See sheet 62 of 73 for bar diagrams, Bill of Materials, and Temporary Shoring detail.
9. Temporary Shoring should be in place before the beams are set.

ANCHOR BOLT LAYOUT

Beamline	A	B	C	D
1	8"	1 3/4"	2 1/4"	12°12'6"
2	8"	1 13/16"	2 5/16"	12°48'16"
3-10	7 15/16"	1 7/8"'	2 3/8"	13°24'15"

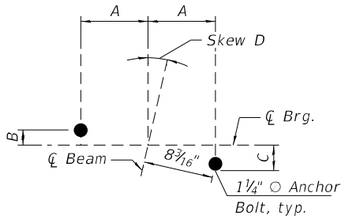

ANCHOR BOLT LOCATION PLAN DETAIL A

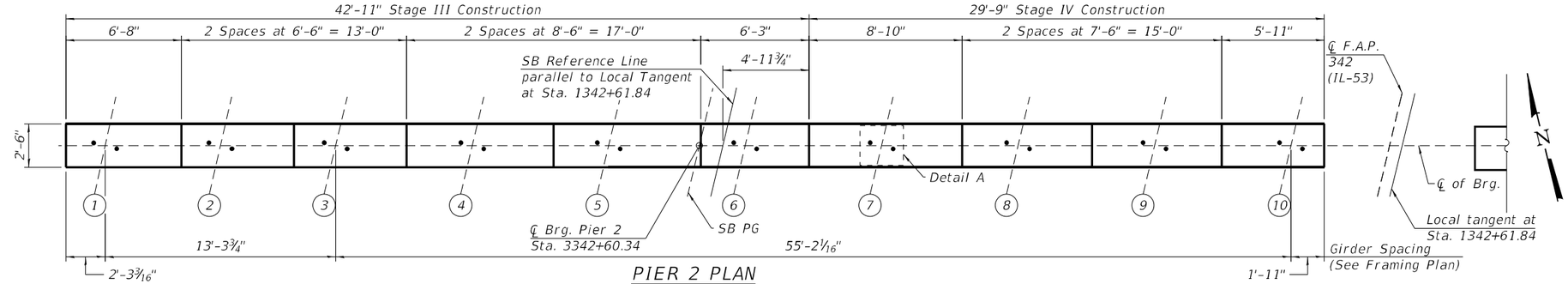

PIER 2 PLAN

To S.N. 016-0373

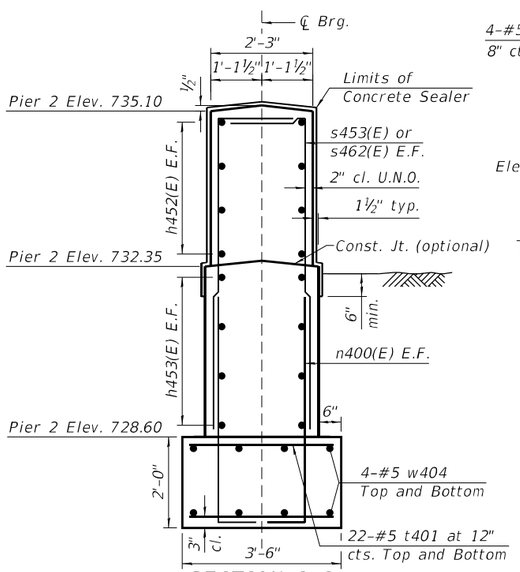

SECTION C-C

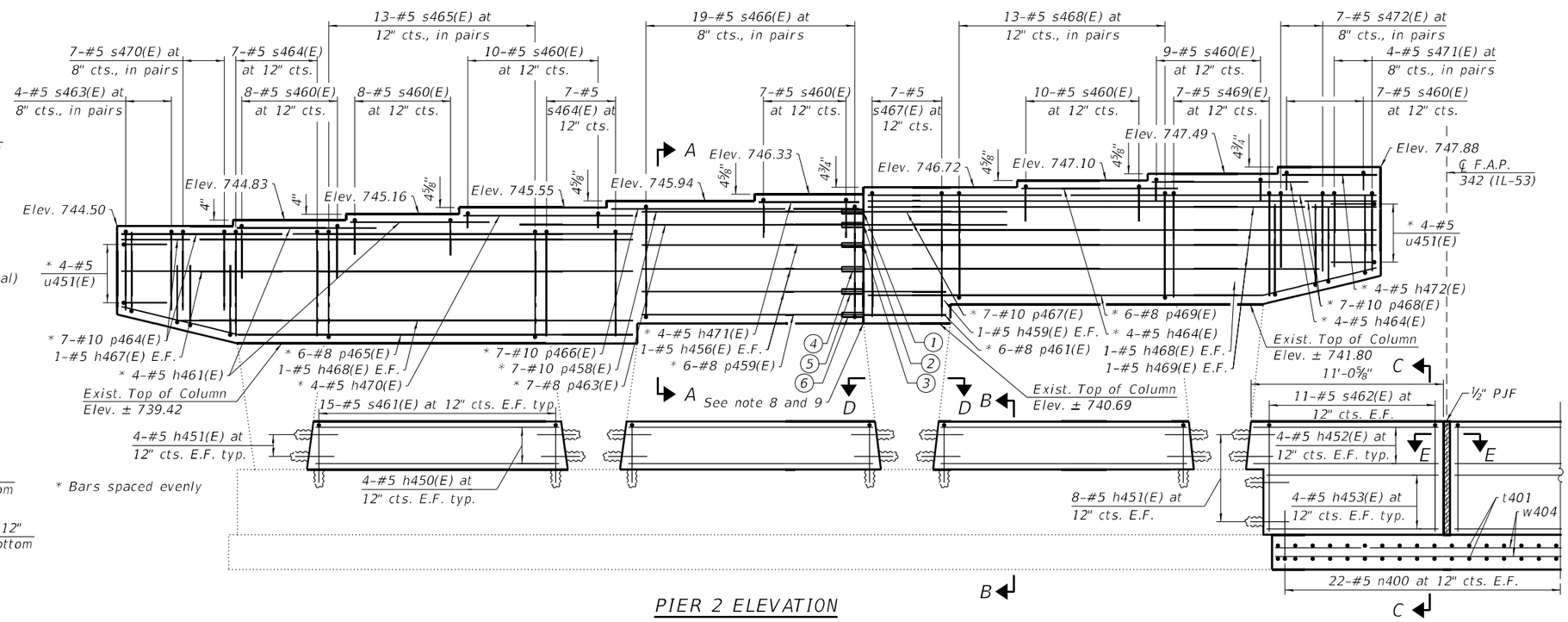

PIER 2 ELEVATION

(Looking North)

1. 7-#10 Mech. Splicers (E) (Couplers) for p463(E)
2. 7-#10 Mech. Splicers (E) (Couplers) for p458(E)
3. 2-#5 Mech. Splicers (E) (Couplers) for h456(E)
4. 2-#5 Mech. Splicers (E) (Couplers) for h456(E)
5. 2-#5 Mech. Splicers (E) (Couplers) for h456(E)
6. 6-#8 Mech. Splicers (E) (Couplers) for p459(E)

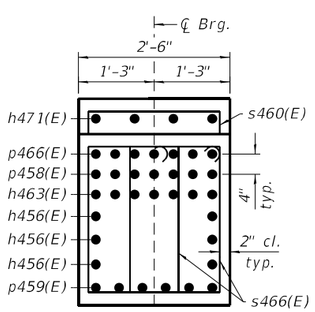

SECTION A-A

(Similar bars not shown for clarity)

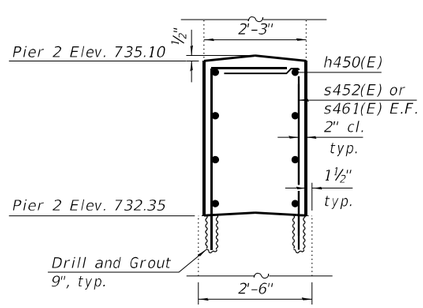

SECTION B-B

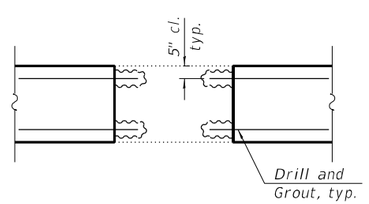

SECTION D-D

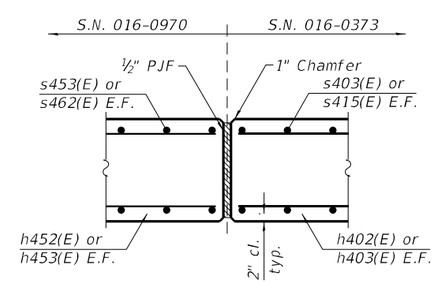

SECTION E-E

Notes:

1. Cost of drilling and grouting reinforcing bars included in cost for Concrete Structures.
2. Bars shall be drilled and set according to Article 584 of the Standard Specifications. Bars shall have a 9" minimum embedment depth.
3. All construction joints between new and existing concrete shall be Bonded Construction Joints.
4. A film forming concrete sealer shall be applied to vertical and horizontal surfaces to the designated area of all new and existing concrete.
5. Space reinforcement in cap to miss anchor bolts.
6. See sheet 3 of 73 for Offset Sketch.
7. Existing bars in column reincorporated into design. See sheet 47 of 73 for details.
8. See sheet 62 of 73 for bar diagrams, Bill of Materials, and Temporary Shoring detail.
9. Temporary Shoring should be in place before the beams are set.

ANCHOR BOLT LAYOUT

Beamline	A	B	C	D
1	1'-0 1/2"	2 5/8"	3 1/2"	12°12'6"
2	1'-0 1/2"	3"	3 5/8"	12°48'16"
3-10	1'-0 1/2"	3 1/8"	3 3/4"	13°24'15"

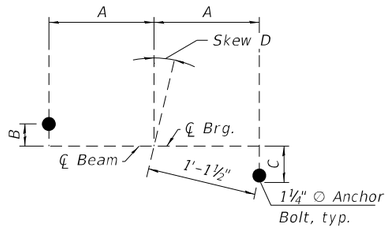

ANCHOR BOLT LOCATION PLAN DETAIL A

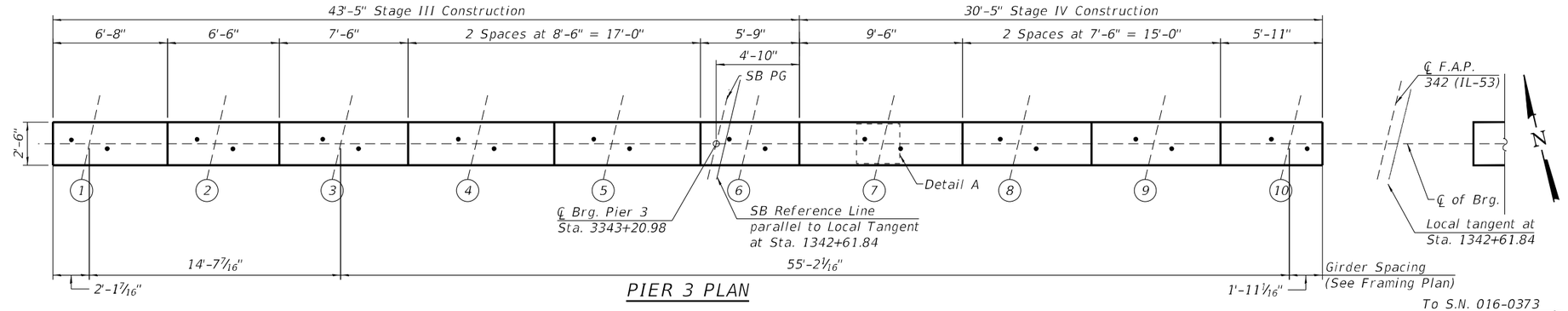

PIER 3 PLAN

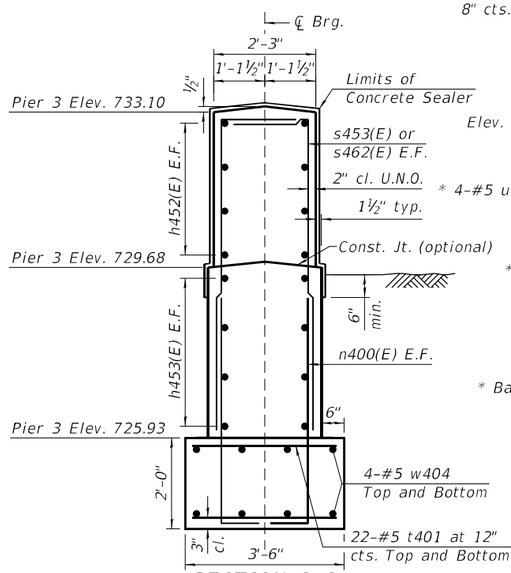

SECTION C-C

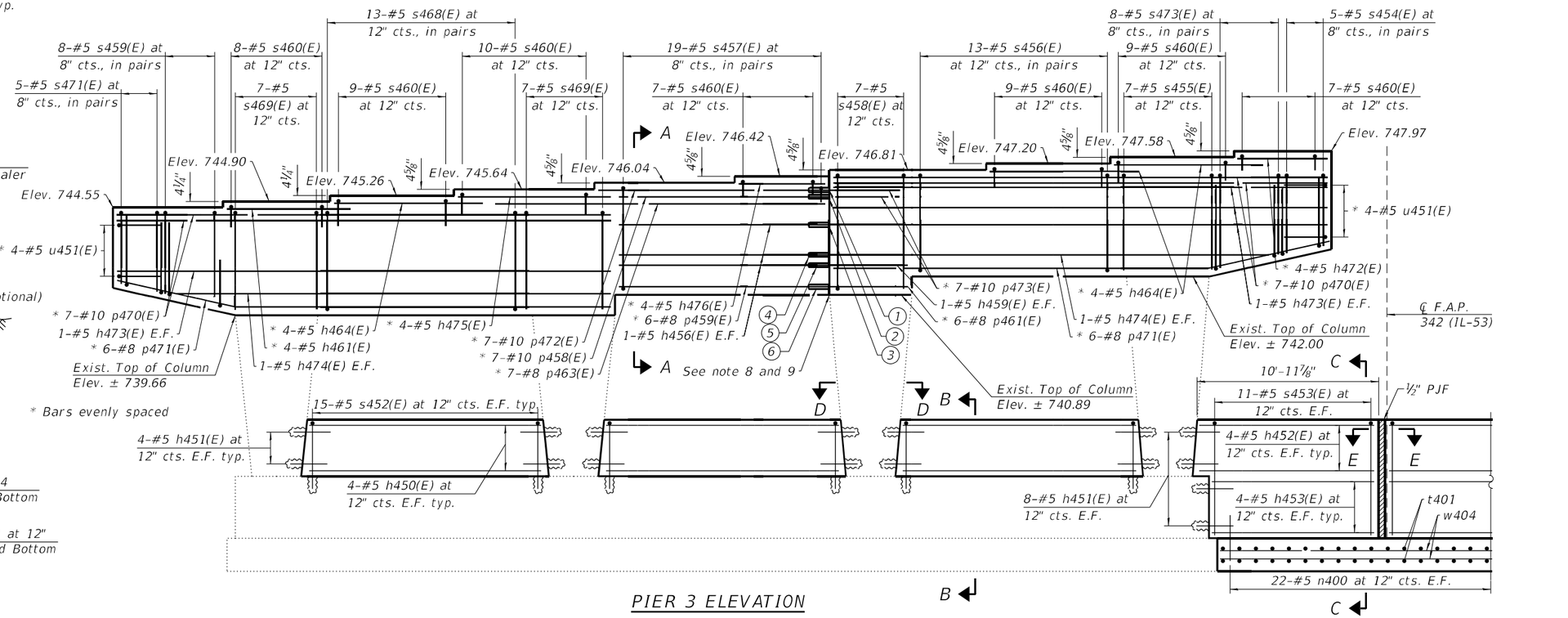

PIER 3 ELEVATION

(Looking North)

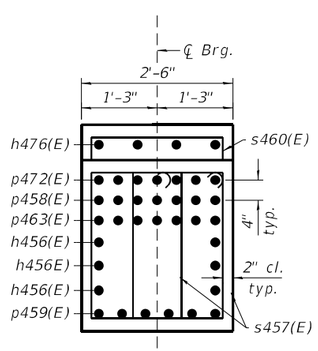

SECTION A-A

(Similar bars not shown for clarity)

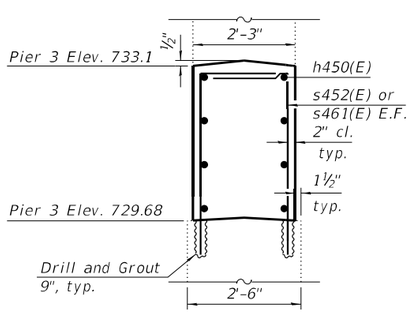

SECTION B-B

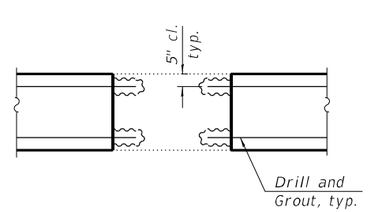

SECTION D-D

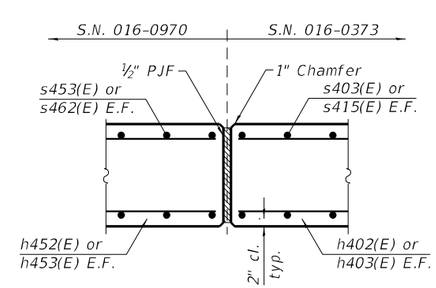

SECTION E-E

1. 7-#10 Mech. Splicers (E) (Couplers) for p472(E)
2. 7-#10 Mech. Splicers (E) (Couplers) for p458(E)
3. 2-#5 Mech. Splicers (E) (Couplers) for h456(E)
4. 2-#5 Mech. Splicers (E) (Couplers) for h456(E)
5. 2-#5 Mech. Splicers (E) (Couplers) for h456(E)
6. 6-#8 Mech. Splicers (E) (Couplers) for p459(E)

Notes:

1. Cost of drilling and grouting reinforcing bars included in cost for Concrete Structures.
2. Bars shall be drilled and set according to Article 584 of the Standard Specifications. Bars shall have a 9" minimum embedment depth.
3. All construction joints between new and existing concrete shall be Bonded Construction Joints.
4. A film forming concrete sealer shall be applied to vertical and horizontal surfaces to the designated area of all new and existing concrete.
5. Space reinforcement in cap to miss anchor bolts.
6. See sheet 3 of 73 for Offset Sketch.
7. Existing bars in column reincorporated into design. See sheet 52 of 73 for details.
8. See sheet 62 of 73 for bar diagrams, Bill of Materials, and Temporary Shoring detail.
9. Temporary Shoring should be in place before the beams are set.

PIER 1 BILL OF MATERIALS

Bar	No.	Size	Length	Shape
h450(E)	24	#5	14'-0"	
h451(E)	64	#5	3'-8"	
h452(E)	8	#5	10'-8"	
h453(E)	8	#5	10'-0"	
h454(E)	8	#5	29'-1"	
h455(E)	4	#5	25'-11"	
h456(E)	6	#5	12'-8"	
h459(E)	2	#5	4'-8"	
h460(E)	4	#5	7'-3"	
h461(E)	4	#5	8'-2"	
h462(E)	4	#5	11'-5"	
h463(E)	4	#5	7'-5"	
h464(E)	8	#5	9'-2"	
h465(E)	4	#5	5'-9"	
p455(E)	14	#10	29'-1"	
p456(E)	12	#8	29'-1"	
p457(E)	7	#10	15'-11"	
p458(E)	7	#10	12'-8"	
p459(E)	6	#8	12'-8"	
p460(E)	14	#10	8'-0"	
p461(E)	6	#8	4'-8"	
p462(E)	14	#10	29'-1"	
p463(E)	7	#8	20'-0"	
s452(E)	90	#5	5'-10"	
s453(E)	22	#5	8'-8"	
s454(E)	8	#5	7'-7"	
s455(E)	21	#5	11'-2"	
s456(E)	52	#5	13'-3"	
s457(E)	38	#5	13'-11"	
s458(E)	7	#5	13'-4"	
s459(E)	14	#5	8'-10"	
s460(E)	63	#5	5'-2"	
u451(E)	8	#5	8'-4"	
Concrete Structures			CU YD	57.7
Concrete Sealer			SQ FT	937
Reinforcement Bars, Epoxy Coated			POUND	10,840
Mechanical Splicers			EACH	26
Temporary Shoring			EACH	1

PIER 2 BILL OF MATERIALS

Bar	No.	Size	Length	Shape
h450(E)	24	#5	14'-0"	
h451(E)	64	#5	3'-8"	
h452(E)	8	#5	10'-8"	
h453(E)	8	#5	10'-0"	
h456(E)	6	#5	12'-8"	
h459(E)	2	#5	4'-8"	
h461(E)	8	#5	8'-2"	
h464(E)	8	#5	9'-2"	
h467(E)	2	#5	29'-7"	
h468(E)	4	#5	26'-2"	
h469(E)	6	#5	29'-5"	
h470(E)	4	#5	9'-11"	
h471(E)	4	#5	5'-11"	
h472(E)	4	#5	5'-7"	
p458(E)	7	#10	12'-8"	
p459(E)	6	#8	12'-8"	
p461(E)	6	#8	4'-8"	
p463(E)	7	#8	20'-0"	
p464(E)	14	#10	29'-7"	
p465(E)	6	#8	29'-7"	
p466(E)	7	#10	14'-5"	
p467(E)	14	#10	8'-6"	
p468(E)	14	#10	29'-5"	
p469(E)	6	#8	29'-5"	
s460(E)	59	#5	5'-2"	
s461(E)	90	#5	5'-2"	
s462(E)	22	#5	8'-2"	
s463(E)	8	#5	8'-1"	
s464(E)	14	#5	11'-8"	
s465(E)	26	#5	13'-9"	
s466(E)	38	#5	14'-1"	
s467(E)	7	#5	13'-6"	
s468(E)	26	#5	13'-5"	
s469(E)	7	#5	11'-4"	
s470(E)	14	#5	9'-6"	
s471(E)	8	#5	7'-8"	
s472(E)	14	#5	9'-2"	
u451(E)	8	#5	8'-4"	
Concrete Structures			CU YD	56.4
Concrete Sealer			SQ FT	950
Reinforcement Bars, Epoxy Coated			POUND	11,030
Mechanical Splicers			EACH	26
Temporary Shoring			EACH	1

PIER 3 BILL OF MATERIALS

Bar	No.	Size	Length	Shape
h450(E)	24	#5	14'-0"	
h451(E)	64	#5	3'-8"	
h452(E)	8	#5	10'-8"	
h453(E)	8	#5	10'-0"	
h456(E)	6	#5	12'-8"	
h459(E)	2	#5	4'-8"	
h461(E)	4	#5	8'-2"	
h464(E)	12	#5	9'-2"	
h472(E)	4	#5	5'-7"	
h473(E)	8	#5	30'-1"	
h474(E)	4	#5	26'-5"	
h475(E)	4	#5	9'-5"	
h476(E)	4	#5	5'-5"	
p458(E)	7	#10	12'-8"	
p459(E)	6	#8	12'-8"	
p461(E)	6	#8	4'-8"	
p463(E)	7	#8	20'-0"	
p470(E)	28	#10	30'-1"	
p471(E)	12	#8	30'-1"	
p472(E)	7	#10	13'-11"	
p473(E)	14	#10	9'-2"	
s452(E)	90	#5	5'-10"	
s453(E)	22	#5	8'-8"	
s454(E)	10	#5	7'-7"	
s455(E)	7	#5	11'-2"	
s456(E)	26	#5	13'-3"	
s457(E)	38	#5	13'-11"	
s458(E)	14	#5	13'-4"	
s459(E)	16	#5	8'-10"	
s460(E)	59	#5	5'-2"	
s468(E)	26	#5	13'-5"	
s469(E)	14	#5	11'-4"	
s471(E)	10	#5	7'-8"	
s473(E)	16	#5	8'-8"	
u451(E)	8	#5	8'-4"	
Concrete Structures			CU YD	58.4
Concrete Sealer			SQ FT	954
Reinforcement Bars, Epoxy Coated			POUND	11,340
Mechanical Splicers			EACH	26
Temporary Shoring			EACH	1

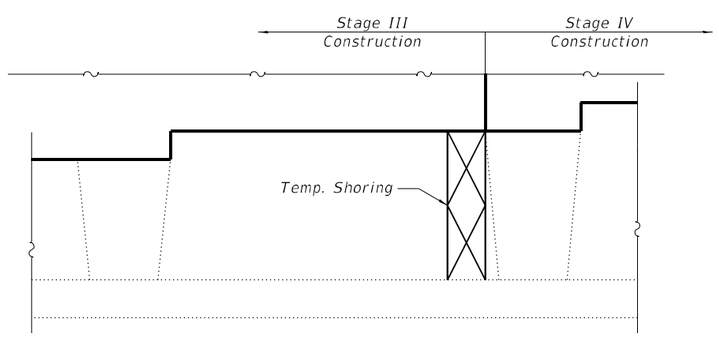

TEMPORARY SHORING DETAIL

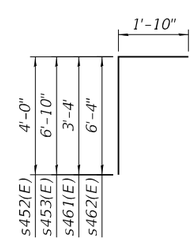

BARS s452(E), s453(E), s461(E), AND s462(E)

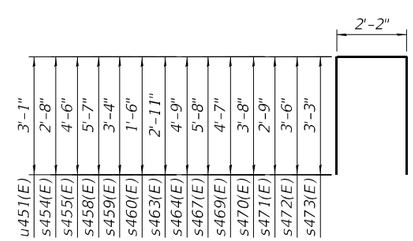

BARS s454(E), s455(E), s458(E)-s460(E), s463(E), s464(E), s467(E), s469(E)-s473(E), AND u451(E)

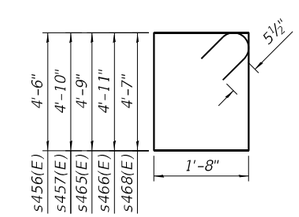

BARS s456(E), s457(E), s465(E), s466(E), AND s468(E)

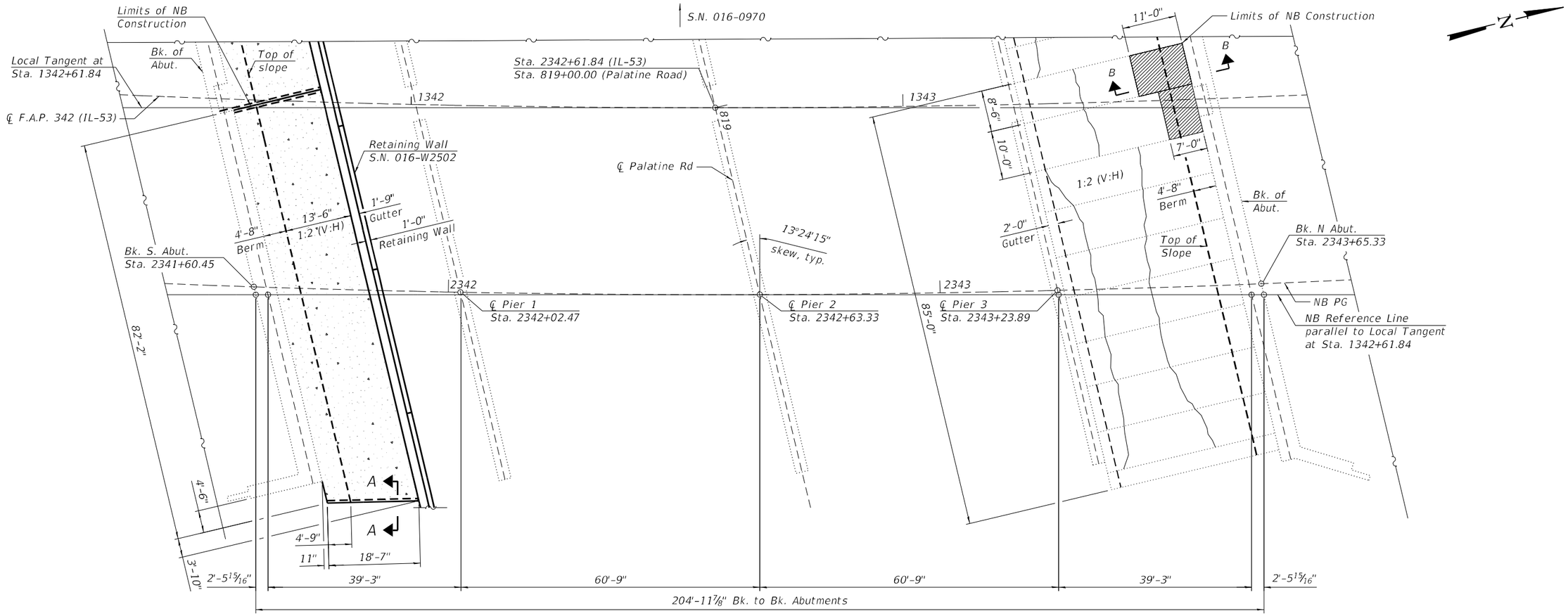

SLOPEWALL PLAN

LEGEND

- Slope Wall 4 Inch
- Slope Wall Crack Sealing
- Slope Wall Repair

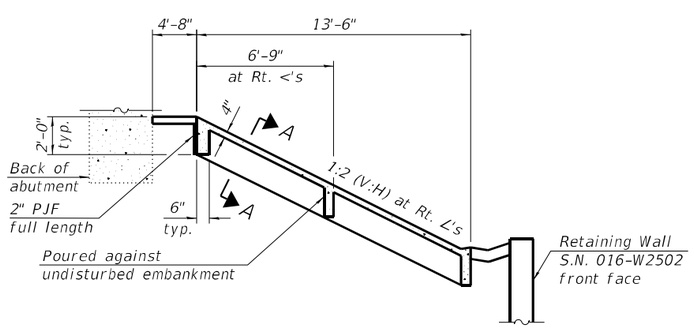

SECTION THRU CONCRETE SLOPEWALL 4"

(South Slope Wall)

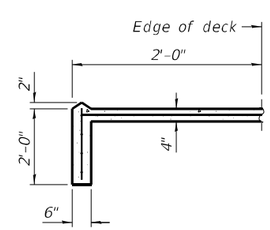

SECTION A-A

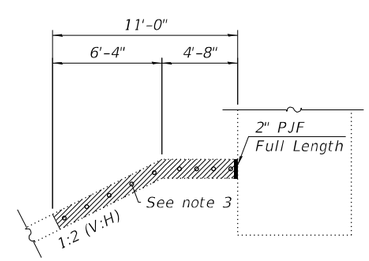

SECTION B-B

(North Slope Wall)

TOTAL BILL OF MATERIALS

Item	Unit	Total
Slope Wall 4 Inch	SQ YD	187
Slope Wall Crack Sealing	FOOT	166
Slope Wall Repair	SQ YD	19

Notes:

1. Slope wall shall be reinforced with welded wire fabric, 6in. x 6in. - W4.0 x W4.0, weighing 58lbs. per 100 sq. ft.
2. Slope Wall Removal is associated with construction of S.N. 016-W2502. See retaining wall for more information.
3. Existing welded wire fabric shall extend 6" into the proposed Slope Wall Repair. The exposed 6" of welded wire fabric on either side shall be lapped with the proposed slope wall reinforcement.
4. Cost of welded wire fabric shall be included in Slope Wall Repair or Slope Wall 4 Inch.
5. The cost of Preformed Joint Filler 2" where indicated is included in the cost of associated slope wall pay items.

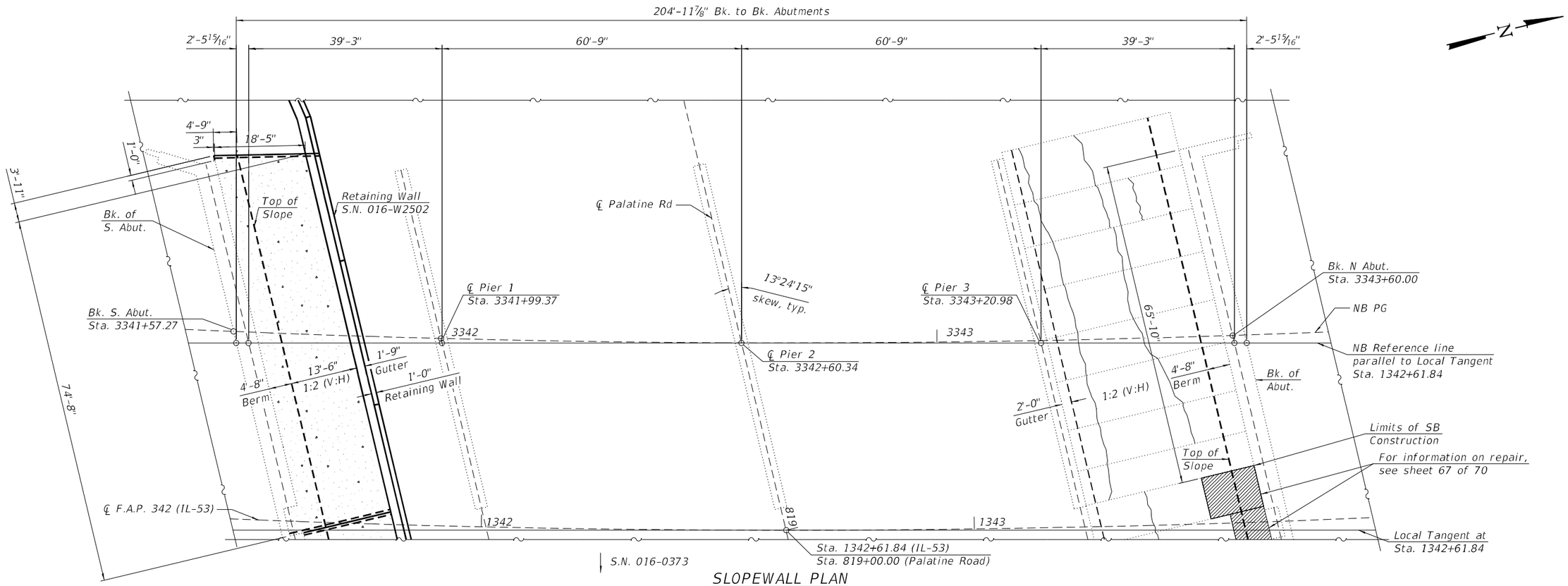

SLOPEWALL PLAN

LEGEND

Slope Wall 4 Inch

Slope Wall Crack Sealing

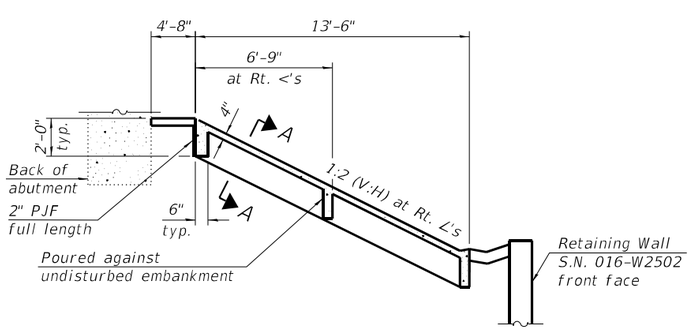

SECTION THRU CONCRETE SLOPEWALL 4"

(South Slope Wall)

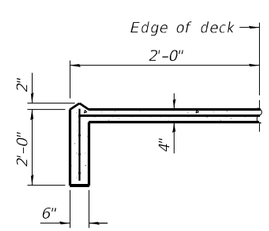

SECTION A-A

TOTAL BILL OF MATERIALS

Item	Unit	Total
Slope Wall 4 Inch	SQ YD	167
Slope Wall Crack Sealing	FOOT	180

Notes:

1. Slope wall shall be reinforced with welded wire fabric, 6in. x 6in. - W4.0 x W4.0, weighing 58lbs. per 100 sq. ft.
2. Slope Wall Removal is associated with construction of S.N. 016-W2502. See retaining wall for more information.
3. Existing welded wire fabric shall extend 6" into the proposed Slope Wall Repair. The exposed 6" of welded wire fabric on either side shall be lapped with the proposed slope wall reinforcement.
4. Cost of welded wire fabric shall be included in Slope Wall Repair or Slope Wall 4 Inch.
5. The cost of Preformed Joint Filler 2" where indicated is included in the cost of associated slope wall pay items.

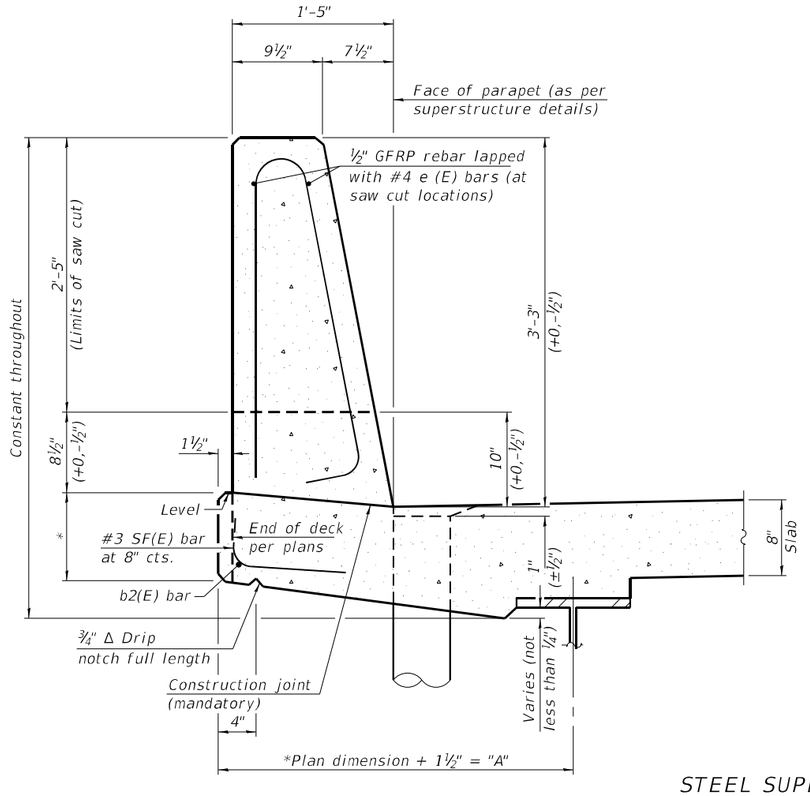

39" CONSTANT-SLOPE PARAPET SECTION

(Showing dimensions, d(E), and ½" Ø GFRP rebar)

STEEL SUPERSTRUCTURES

*See Superstructure Details.

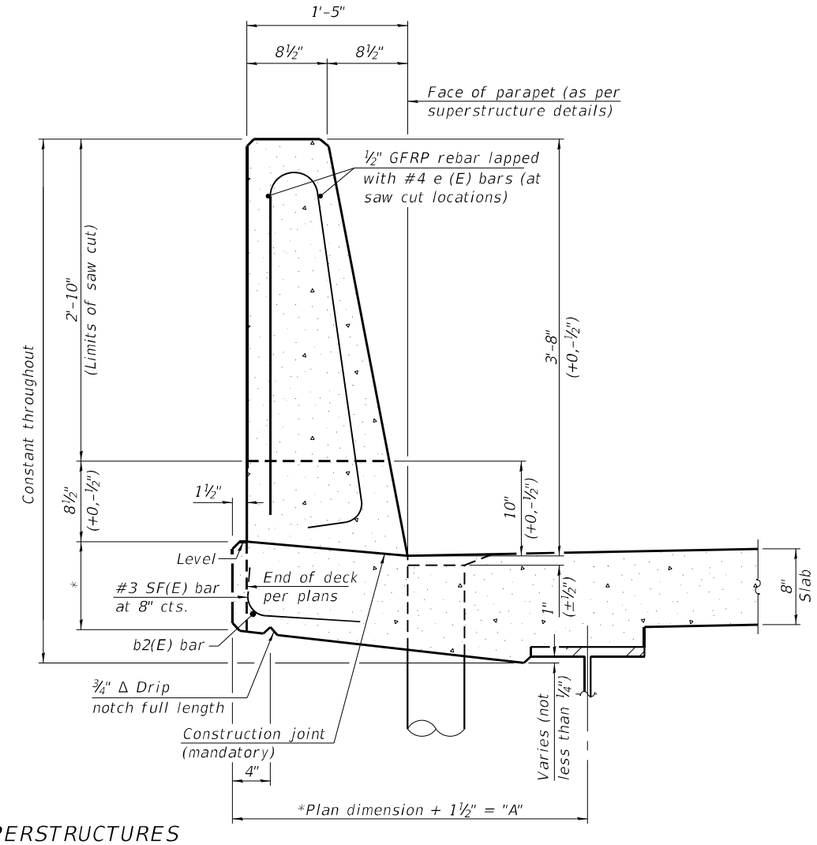

44" CONSTANT-SLOPE PARAPET SECTION

(Showing dimensions, d(E), and ½" Ø GFRP rebar)

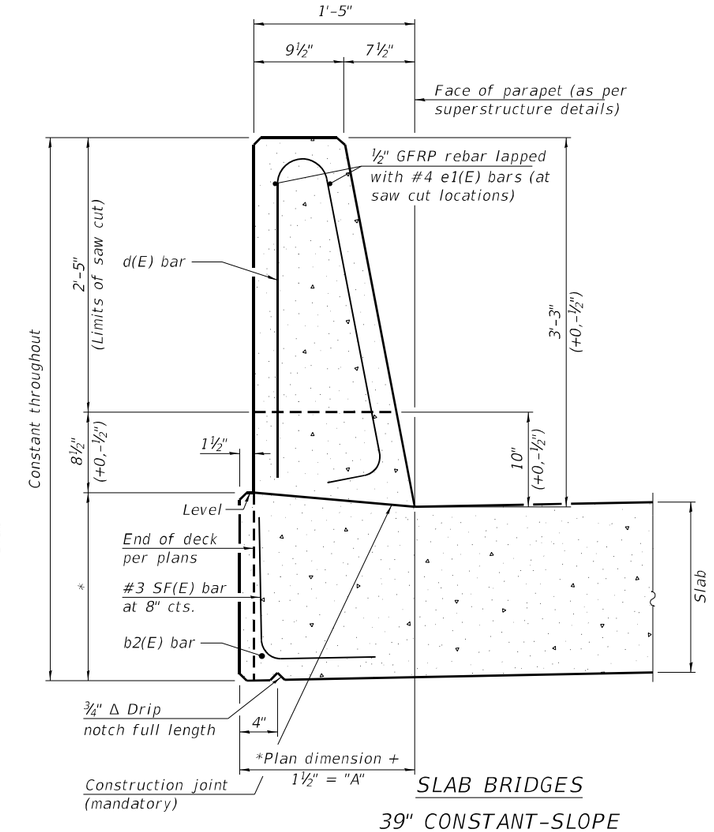

SLAB BRIDGES

39" CONSTANT-SLOPE PARAPET SECTION

(Showing dimensions, d(E), and ½" Ø GFRP rebar)

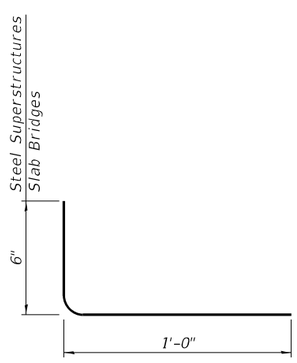

SF(E) BAR

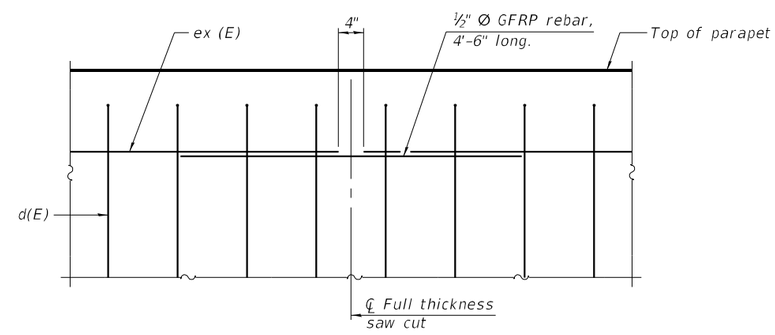

DETAIL - GFRP REBAR STIFFENING ELEVATION

(Place as shown in parapet section at each parapet joint location.)

Notes:

All dimensions shall remain the same as shown on superstructure details, except dimension "A" which is to be revised as shown.

Additional concrete needed to revise dimension "A" (39" and 44" parapets):

Steel Superstructures: 0.00348 cu. yds./ft.

Slab Bridge Superstructures: cu. yds./ft.

Place full depth aluminum sheets as shown on superstructure details.

Replace all cork joint filler locations with a full thickness saw cut.

Steel and slab superstructures shown. Other superstructure types similar.

SFP 39-44 10/27/2023

MODEL: Default
FILE NAME: S:\IOL\6300-6399\6346\113\Drawings\CAD\Micros-SSA\CAD_Sheets\0160373097O-62W38-069-CPSFO.dgn
9/25/2024 7:56:26 AM

STRAND ASSOCIATES® 1170 SOUTH HOUBOLT ROAD JOLIET, ILLINOIS 60431 (815) 744-4200 IDFPR NO. 184-001273

USER NAME = codyh	DESIGNED - TJE	REVISED -	
	CHECKED - NDR	REVISED -	
PLOT SCALE = 0:2.0000 ':" / in.	DRAWN - CJH	REVISED -	
PLOT DATE = 9/25/2024	CHECKED - TJE	REVISED -	

STATE OF ILLINOIS
DEPARTMENT OF TRANSPORTATION

CONCRETE PARAPET SLIP FORMING OPTION
STRUCTURE NO. 016-0373 (NB) AND 016-0970 (SB)

SHEET 69 OF 73 SHEETS

F.A. RTE.	SECTION	COUNTY	TOTAL SHEETS	SHEET NO.
342	(531) BR 23	COOK	1211	887
		CONTRACT NO. 62W38		
	ILLINOIS	FED. AID PROJECT		

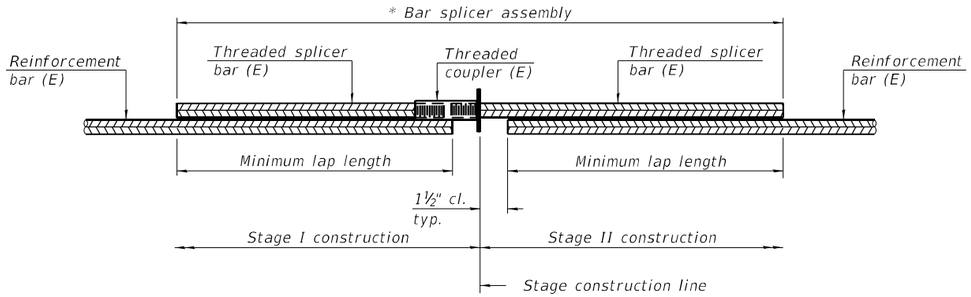

STANDARD BAR SPLICER ASSEMBLY PLAN

Only bar splicer assemblies as presented on the approved QPL list may be used.

Threaded splicer bar length = min. lap length + 1½" + thread length

* Epoxy not required on Bar Splicer Assembly components used in conjunction with black bars.

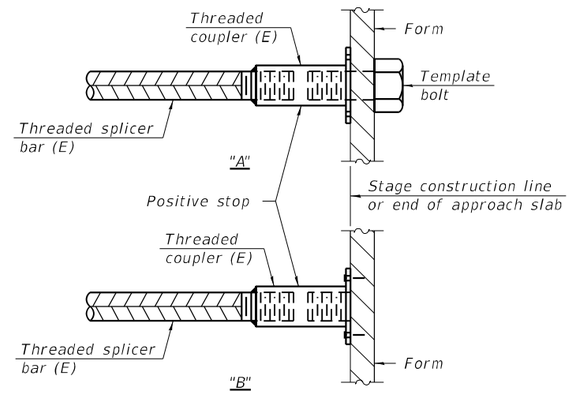

INSTALLATION AND SETTING METHODS

"A" : Set bar splicer assembly by means of a template bolt.
"B" : Set bar splicer assembly by nailing to wood forms or cementing to steel forms.
(E) : Indicates epoxy coating.

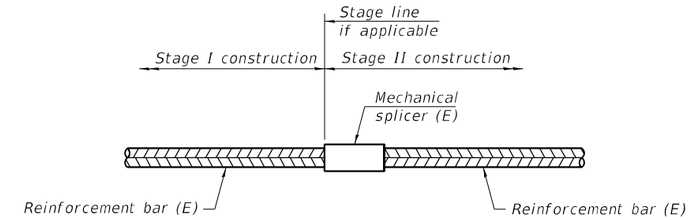

MECHANICAL SPLICER (E) (COUPLERS)

STRUCTURE NO. 016-0373 (NB)

Location	Bar Size	No. Assemblies
S. Abut. Diaphragm	#4	2
S. Abut. Diaphragm	#6	9
N. Abut. Diaphragm	#4	2
N. Abut. Diaphragm	#6	9
S. Abut.	#5	9
S. Abut.	#7	5
N. Abut.	#5	9
N. Abut.	#7	10
Pier 1	#8	13
Pier 2	#8	13
Pier 3	#8	13

STRUCTURE NO. 016-0373 (NB)

Location	Bar Size	No. Assemblies	Minimum lap length
Top Deck	#5	454	3'-6"
Bottom Deck	#5	286	3'-6"
S. Approach Slab	#5	86	3'-0"
S. Approach Slab	#8	60	4'-9"
N. Approach Slab	#5	86	3'-0"
N. Approach Slab	#8	60	4'-9"

STRUCTURE NO. 016-0970 (SB)

Location	Bar Size	No. Assemblies	Minimum lap length
Top Deck	#5	439	3'-6"
Bottom Deck	#5	275	3'-6"
S. Approach Slab	#5	86	3'-0"
S. Approach Slab	#8	60	4'-9"
N. Approach Slab	#5	86	3'-0"
N. Approach Slab	#8	60	4'-9"

STRUCTURE NO. 016-0970 (SB)

Location	Bar Size	No. Assemblies
S. Abut Diaphragm	#4	2
S. Abut Diaphragm	#6	9
N. Abut Diaphragm	#4	2
N. Abut Diaphragm	#6	9
S. Abut.	#5	9
S. Abut.	#7	10
N. Abut.	#5	2
N. Abut.	#7	15
Pier 1	#5	6
Pier 1	#8	6
Pier 1	#10	14
Pier 2	#5	6
Pier 2	#8	6
Pier 2	#10	14
Pier 3	#5	6
Pier 3	#8	6
Pier 3	#10	14

Notes:
1. Splicer bars shall be deformed with threaded ends and have a minimum 60 ksi yield strength.
2. All reinforcement shall be lapped and tied to the splicer bars.
3. Bar splicer assemblies shall be epoxy coated according to the requirements for reinforcement bars. See Section 508 of the Standard Specifications.
4. See approved list of bar splicer assemblies and mechanical splicers for alternatives.

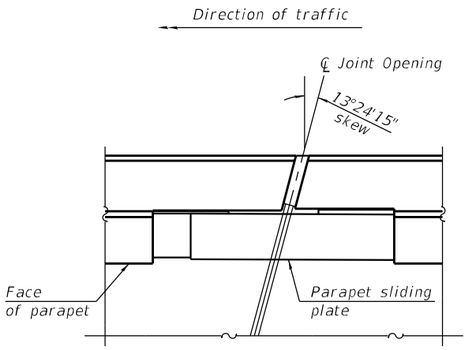

PLAN AT END OF APPROACH

(Drawn for SB IL-53 North approach sliding plate detail, other views similar.)

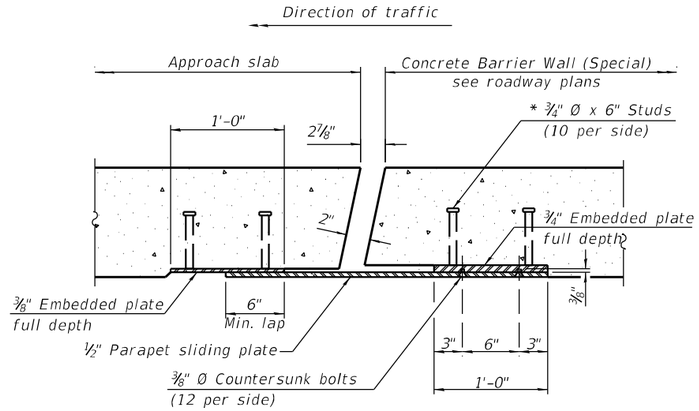

SECTION B-B

(Drawn for SB IL-53 North approach sliding plate detail, other views similar.)

Notes:

The preformed pavement joint seal shall be made continuous and shall have a minimum thickness of ¼". The configuration of the stripseal shall match the configuration of the locking edge rails. Open or "webbed" strip seal gland configurations are not permitted. The gland shall be sized for a maximum rated movement of 4 inches.

The manufacturer's recommended installation methods shall be followed.

All steel components shall be galvanized after fabrication according to Article 520.03 of the Standard Specifications.

Cost of parapet sliding plates, embedded plates, and anchorage studs included with Concrete Barrier Wall (Special)

39" constant slope barrier shown, 44" constant slope barrier similar as noted.

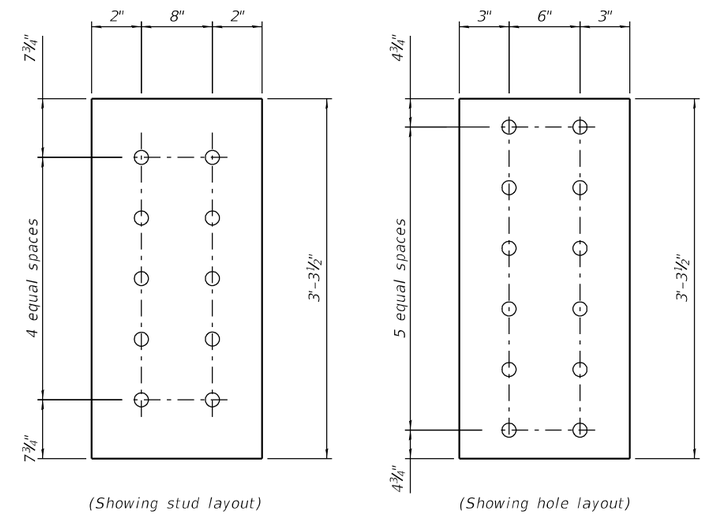

EMBEDDED PLATE DETAIL

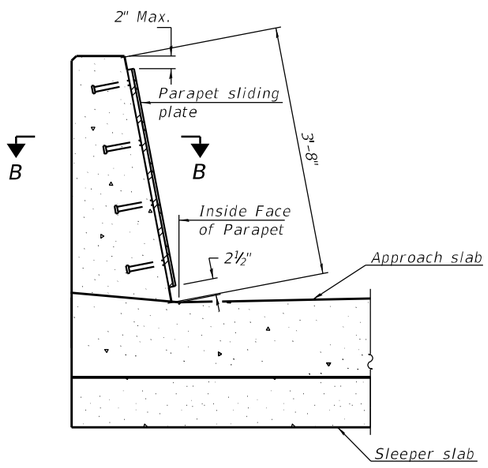

SECTION AT END OF APPROACH

Notes:

1. See bridge approach sheet 37

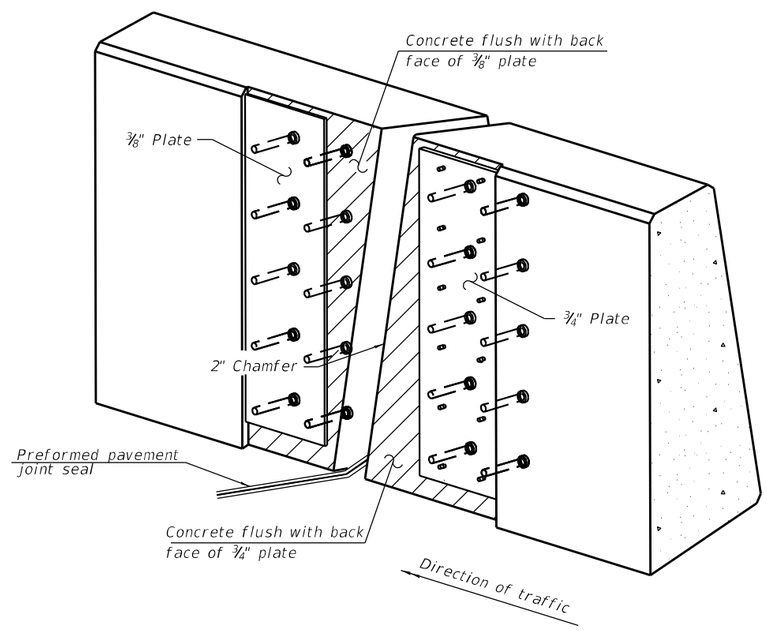

TRIMETRIC VIEW

(Showing embedded plates only)

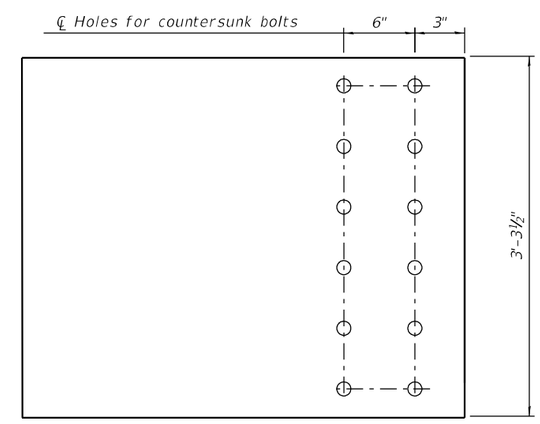

MEDIAN SLIDING PLATE

MODEL: Default
FILE NAME: S:\IDL\6300-6399\6346\113\Drawings\CAD\Micros-SS4\CAD_Sheets\0160373\0970-62W38-070A-SP.dgn
9/25/2024 8:29:14 AM

STRAND ASSOCIATES®
1170 SOUTH HOUBOLT ROAD
JOLIET, ILLINOIS 60431
(815) 744-4200
IDFPR NO. 184-001273

USER NAME = codyh	DESIGNED - JAS	REVISED -	
	CHECKED - NDR	REVISED -	
PLOT SCALE = 0:2.0000 ':" / in.	DRAWN - JAS	REVISED -	
PLOT DATE = 9/25/2024	CHECKED - NDR	REVISED -	

STATE OF ILLINOIS
DEPARTMENT OF TRANSPORTATION

MEDIAN SLIDING PLATE
STRUCTURE NO. 016-0373 (NB) AND 016-0970 (SB)

SHEET 70A OF 73 SHEETS

F.A. RTE.	SECTION	COUNTY	TOTAL SHEETS	SHEET NO.
342	(531) BR 23	COOK	1211	888A
		CONTRACT NO. 62W38		
	ILLINOIS	FED. AID PROJECT		

SOIL BORING LOG

Date 05/03/23

ROUTE FAP 342 DESCRIPTION IL 53 over Palatine Rd LOGGED BY Gonzalez (BR)

SECTION 2018-100-BR LOCATION SW 1/4, **SEC.** 18, **TWP.** 42N, **RNG.** 11E, 3rd **PM**, **Latitude** 42.11055789, **Longitude** 88.00317255

COUNTY Cook DRILLING METHOD Hollow Stem Auger (8" O.D., 3.25" I.D.) HAMMER TYPE Auto 140 lb HE 105

STRUCT. NO. 016-0970
Station

BORING NO. GC-09
Station 3344+18
Offset 28.9 ft RT
Ground Surface Elev. 751.3 ft

Surface Water Elev. ft
Stream Bed Elev. ft

Groundwater Elev.:
First Encounter Dry ft
Upon Completion Dry ft
After Hrs. Filled ft

	Elev.	DEPTH (ft)	BLOWS (/6")	UCS Qu (tsf)	MOIST (%)
CONCRETE - 12.5"	750.3				
Loose, Brown, Moist, Fine SAND	750.0		5		
Stiff, Brown, Dry, CLAY, Some Gravel, Trace Sand and Gravel			4 7	3.5 P	12
			3		
			5 7	3.3 B	21
Stiff, Black, Dry, CLAY	746.6 746.3	-5			
Stiff, Brown, Dry to Moist, CLAY, Some Sand, Trace Gravel			4		
			5 6	3.9 B	15
			3		
			4 5	2.0 B	25
		-10			
	740.8				
Stiff, Brown, Moist to Dry, CLAY, Trace Gravel			3		
			5 6	3.8 B	12
			2		
			7 5	4.0 P	10
		-15			
	735.2				
Stiff, Brown and Dark Brown, Dry, CLAY			5		
	734.0		5 7	3.4 S	17
Stiff, Brown, Moist, CLAY					
			5		
			7 9	2.3 B	17
		-20			

	DEPTH (ft)	BLOWS (/6")	UCS Qu (tsf)	MOIST (%)
Stiff, Brown, Moist, CLAY *(continued)*				
		3		
		5 7	2.3 B	24
		6		
		8 10	3.5 B	24
	-25			
Organic Material		8		
		11 15	9.9 S	17
		6		
		10 13	6.6 B	14
	-30			
		4		
		8 11	5.6 B	17
	-35			
		4		
		4 6	1.9 B	19
	-40			

The Unconfined Compressive Strength (UCS) Failure Mode is indicated by (B-Bulge, S-Shear, P-Penetrometer, M-Modified SPT)
The SPT (N value) is the sum of the last two blow values in each sampling zone (AASHTO T206)

BBS, form 137 (Rev. 8-99)

SOIL BORING LOG

Date 05/03/23

ROUTE FAP 342 DESCRIPTION IL 53 over Palatine Rd LOGGED BY Gonzalez (BR)

SECTION 2018-100-BR LOCATION SW 1/4, **SEC.** 18, **TWP.** 42N, **RNG.** 11E, 3rd **PM**, **Latitude** 42.11055789, **Longitude** 88.00317255

COUNTY Cook DRILLING METHOD Hollow Stem Auger (8" O.D., 3.25" I.D.) HAMMER TYPE Auto 140 lb HE 105

STRUCT. NO. 016-0970
Station

BORING NO. GC-09
Station 3344+18
Offset 28.9 ft RT
Ground Surface Elev. 751.3 ft

Surface Water Elev. ft
Stream Bed Elev. ft

Groundwater Elev.:
First Encounter Dry ft
Upon Completion Dry ft
After Hrs. Filled ft

	Elev.	DEPTH (ft)	BLOWS (/6")	UCS Qu (tsf)	MOIST (%)
Stiff, Brown, Moist, CLAY *(continued)*					
			4		
			5 7	1.2 B	15
	706.3	-45			
Boring terminated at 45 feet.					
		-50			
		-55			
		-60			

The Unconfined Compressive Strength (UCS) Failure Mode is indicated by (B-Bulge, S-Shear, P-Penetrometer, M-Modified SPT)
The SPT (N value) is the sum of the last two blow values in each sampling zone (AASHTO T206)

BBS, form 137 (Rev. 8-99)

SOIL BORING LOG

Date 23/05/03

ROUTE FAP 342 DESCRIPTION IL 53 over Palatine Rd LOGGED BY Gonzalez (BR)

SECTION 2018-100-BR LOCATION NW 1/4, SEC. 19, TWP. 42N, RNG. 11E, 3rd PM, Latitude 42.10977658, Longitude 88.00311407

COUNTY Cook DRILLING METHOD Hollow Stem Auger (8" O.D., 3.25" I.D.) HAMMER TYPE Auto 140 lb HE 105

STRUCT. NO. 016-0373
Station

BORING NO. GC-10
Station 2341+34
Offset 35.5 ft RT
Ground Surface Elev. 751.4 ft

Surface Water Elev. ft
Stream Bed Elev. ft

Groundwater Elev.:
First Encounter Dry ft
Upon Completion 714.4 ft ▽
After Hrs. Filled ft

Description	Elev.	DEPTH (ft)	BLOWS (/6")	UCS Qu (tsf)	MOIST (%)
ASPHALT - 10"	750.6				
Soft to Stiff, Brown, Dry, CLAY, Trace Sand, Trace Gravel			6		
			4 3	2.0 P	16
			4		
3" Course Sand Seam		-5	3 2	0.5 P	14
			1		
			2 3	1.2 B	24
			1		
		-10	1 2	0.4 B	13
			4		
			5 5	2.4 B	23
			3		
		-15	4 7	2.7 B	21
			4		
			5 8	5.8 B	19
			5		
	731.4	-20	6 9	6.4 B	19
Stiff, Brown, Moist, CLAY, Trace Gravel			2		
			4 4	1.9 B	26
			3		
		-25	4 5	2.0 B	20
			3		
			6 9	4.3 B	15
			5		
		-30	8 9		15
			4		
Becomes Wet		-35	5 8	2.6 B	20
		▽			
			6		
	711.4	-40	7 8	1.8 B	12

The Unconfined Compressive Strength (UCS) Failure Mode is indicated by (B-Bulge, S-Shear, P-Penetrometer, M-Modified SPT)
The SPT (N value) is the sum of the last two blow values in each sampling zone (AASHTO T206)

BBS, form 137 (Rev. 8-99)

SOIL BORING LOG

Date 23/05/03

ROUTE FAP 342 DESCRIPTION IL 53 over Palatine Rd LOGGED BY Gonzalez (BR)

SECTION 2018-100-BR LOCATION NW 1/4, SEC. 19, TWP. 42N, RNG. 11E, 3rd PM, Latitude 42.10977658, Longitude 88.00311407

COUNTY Cook DRILLING METHOD Hollow Stem Auger (8" O.D., 3.25" I.D.) HAMMER TYPE Auto 140 lb HE 105

STRUCT. NO. 016-0373
Station

BORING NO. GC-10
Station 2341+34
Offset 35.5 ft RT
Ground Surface Elev. 751.4 ft

Surface Water Elev. ft
Stream Bed Elev. ft

Groundwater Elev.:
First Encounter Dry ft
Upon Completion 714.4 ft ▽
After Hrs. Filled ft

Description	Elev.	DEPTH (ft)	BLOWS (/6")	UCS Qu (tsf)	MOIST (%)
Stiff, Brown, Wet, CLAY, Trace Gravel					
			5		
			4 5	1.6 B	23
		-45			
	702.6		5		
Stiff, Brown, Wet, CLAY LOAM, Trace Gravel			5 8		23
		-50			
	698.4				
Loose, Brown, Wet, Fine SAND, Trace Clay, Trace Silt			4		
			5 5		26
	696.4	-55			
Boring terminated at 55 feet.					
		-60			

The Unconfined Compressive Strength (UCS) Failure Mode is indicated by (B-Bulge, S-Shear, P-Penetrometer, M-Modified SPT)
The SPT (N value) is the sum of the last two blow values in each sampling zone (AASHTO T206)

BBS, form 137 (Rev. 8-99)

SOIL BORING LOG

Date 23/05/04

ROUTE FAP 342 DESCRIPTION IL 53 over Palatine Rd LOGGED BY Gonzalez (BR)

SECTION 2018-100-BR LOCATION NW 1/4, SEC. 19, TWP. 42N, RNG. 11E, 3rd PM, Latitude 42.10980038, Longitude 88.00365603

COUNTY Cook DRILLING METHOD Hollow Stem Auger (8" O.D., 3.25" I.D.) HAMMER TYPE Auto 140 lb HE 105

STRUCT. NO. 016-0970
Station

BORING NO. GC-11
Station 3341+18
Offset 31.8 ft LT
Ground Surface Elev. 747.8 ft

Surface Water Elev. ft
Stream Bed Elev. ft

Groundwater Elev.:
First Encounter Dry ft
Upon Completion Dry ft
After Hrs. Filled ft

Description	Elev.	DEPTH (ft)	BLOWS (/6")	UCS Qu (tsf)	MOIST (%)
ASPHALT - 8"	747.1				
Loose, Brown, Moist, Coarse SAND			8		
			4		8
			3		
	744.8				
Medium Stiff to Stiff, Brown, Moist, CLAY, Trace Gravel			2		
			3	2.6	19
		-5	3	B	
			1		
			1		24
			4		
			2		
			3	2.0	21
		-10	5	B	
			2		
			4	4.5	18
			6	B	
			3		
			5	4.3	20
		-15	7	B	
			2		
			4	1.4	21
			2	B	
Some Organics					
			4		
	728.6				
Stiff, Dark Brown, Moist, CLAY			4	2.5	17
	727.8	-20	6	B	

Description	Elev.	DEPTH (ft)	BLOWS (/6")	UCS Qu (tsf)	MOIST (%)
Stiff, Brown, Moist, CLAY, Trace Gravel					
			4		
			3	3.4	21
			5	B	
			5		
			7	6.0	16
		-25	9	B	
			5		
			5	5.2	21
			9	B	
			3		
			5	4.1	13
		-30	7	B	
			3		
			3	1.4	20
		-35	4	B	
			4		
			6	2.8	15
		-40	8	B	

The Unconfined Compressive Strength (UCS) Failure Mode is indicated by (B-Bulge, S-Shear, P-Penetrometer, M-Modified SPT)
The SPT (N value) is the sum of the last two blow values in each sampling zone (AASHTO T206)

BBS, form 137 (Rev. 8-99)

SOIL BORING LOG

Date 23/05/04

ROUTE FAP 342 DESCRIPTION IL 53 over Palatine Rd LOGGED BY Gonzalez (BR)

SECTION 2018-100-BR LOCATION NW 1/4, SEC. 19, TWP. 42N, RNG. 11E, 3rd PM, Latitude 42.10980038, Longitude 88.00365603

COUNTY Cook DRILLING METHOD Hollow Stem Auger (8" O.D., 3.25" I.D.) HAMMER TYPE Auto 140 lb HE 105

STRUCT. NO. 016-0970
Station

BORING NO. GC-11
Station 3341+18
Offset 31.8 ft LT
Ground Surface Elev. 747.8 ft

Surface Water Elev. ft
Stream Bed Elev. ft

Groundwater Elev.:
First Encounter Dry ft
Upon Completion Dry ft
After Hrs. Filled ft

Description	Elev.	DEPTH (ft)	BLOWS (/6")	UCS Qu (tsf)	MOIST (%)
Stiff, Brown, Moist, CLAY, Trace Gravel *(continued)*					
			4		
			6	3.5	20
		-45	8	B	
			2		
			4	1.2	16
		-50	6	B	
			3		
			4	1.6	13
	692.8	-55	6	B	
Boring terminated at 55 feet.					
		-60			

The Unconfined Compressive Strength (UCS) Failure Mode is indicated by (B-Bulge, S-Shear, P-Penetrometer, M-Modified SPT)
The SPT (N value) is the sum of the last two blow values in each sampling zone (AASHTO T206)

BBS, form 137 (Rev. 8-99)

FEDERAL-AID ROUTE NO.	SEC.	COUNTY	TOTAL SHEETS	SHEET NO.
F.A. 61	531-3HB	COOK	29	1
S. F. R. REG. NO. 4	ILLINOIS	PROJECT	U-184(40)	

JOB NO. P-90-001-64

STATE OF ILLINOIS
DEPARTMENT OF PUBLIC WORKS AND BUILDINGS
DIVISION OF HIGHWAYS

PLANS FOR PROPOSED FEDERAL AID HIGHWAY

SCALES
- PLAN 1 INCH 100 FT.
- PROFILE, HOR. 1 INCH 100 FT.
- PROFILE, VERT. 1 INCH 10 FT.
- CROSS-SECTIONS 1 INCH 5 FT.

(S.B.I. ROUTE 53) F.A. ROUTE 61 SECTION 531-3HB - COOK COUNTY

PROJECT U-184 (40)

C - 90 - 442 - 64

DUAL STRUCTURES OVER PALATINE ROAD
RELOCATED ROUTE 53

INDEX OF SHEETS ON SHEET 2

PROJECT LENGTH 205.09 LIN. FT. OR 0.039 MILES

SECTION 531-3HB INCLUDES THE CONSTRUCTION OF DUAL 4-SPAN CONTINUOUS WIDE FLANGE BEAM GRADE SEPARATION STRUCTURES (TO CARRY RELOCATED ROUTE 53 OVER PALATINE ROAD), WITH SPANS 2@ 60'-9" AND 2@39'-3", ON OPEN R.C. ABUTMENTS AND R.C. PIERS, IN THE VILLAGE OF ARLINGTON HEIGHTS.

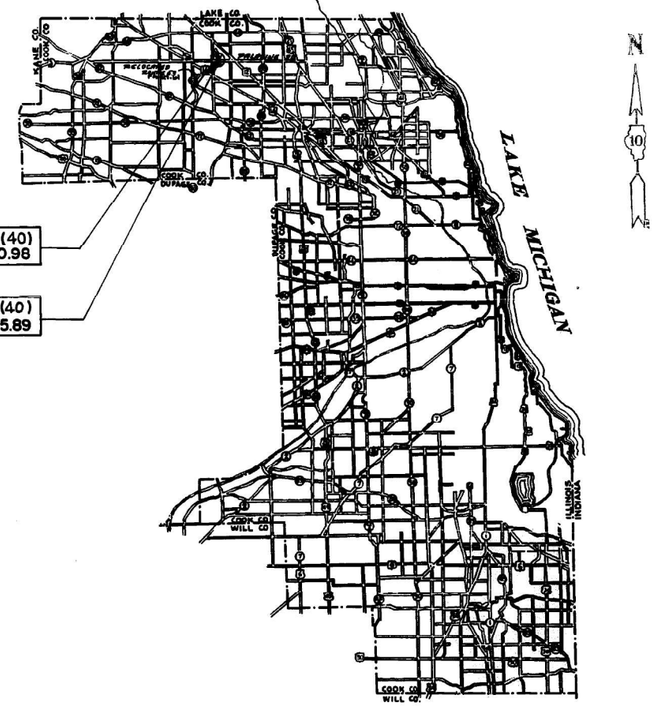

PROJECT U-184(40) ENDS STA. 330+20.98

PROJECT U-184(40) BEGINS STA. 328 + 15.89

FOR INFORMATION ONLY

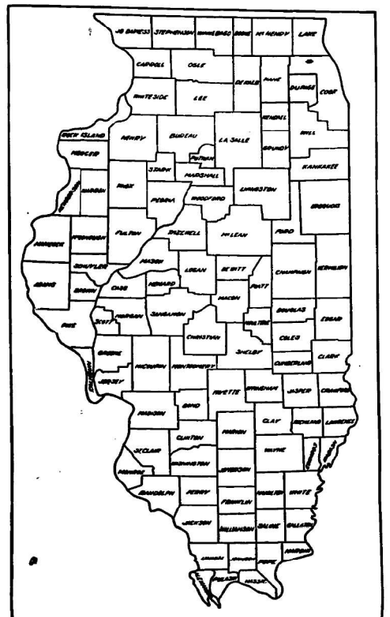

LOCATION OF SECTION INDICATED THUS:—

STATE OF ILLINOIS
DEPARTMENT OF PUBLIC WORKS AND BUILDINGS
DIVISION OF HIGHWAYS
SUBMITTED August 31 1964
C. A. Benowitz
DIRECTOR
EXAMINED Sept. 11 1964
W. Wm. Thurstall
ASSISTANT TO DEPUTY DIRECTOR
PASSED Sept. 11 1964
ASSISTANT DIRECTOR
APPROVED Sept. 11 1964
CHIEF ENGINEER
APPROVED Sept. 11 1964
DIRECTOR

DEPARTMENT OF COMMERCE
BUREAU OF PUBLIC ROADS
APPROVED
DIVISION ENGINEER DATE

R. KENNEDY

JOB NUMBER CONTRACT NO. 23867

COUNTY COOK SECTION 531-3HB F. A. ROUTE 61

STRAND ASSOCIATES 1170 SOUTH HOUBOLT ROAD JOLIET, ILLINOIS 60431 (815) 744-4200 IDFPR NO. 184-001273	USER NAME = codyh	DESIGNED -	REVISED -	STATE OF ILLINOIS DEPARTMENT OF TRANSPORTATION
		CHECKED -	REVISED -	
	PLOT SCALE = 0:2.0000 ':" / in.	DRAWN - CJH	REVISED -	
	PLOT DATE = 9/25/2024	CHECKED - TJE	REVISED -	

EXISTING DRAWINGS
STRUCTURE NO. 016-0373 (NB) AND 016-0970 (SB)

F.A. RTE.	SECTION	COUNTY	TOTAL SHEETS	SHEET NO.
342	(531) BR 23	COOK	1211	892
		CONTRACT NO. 62W38		
		ILLINOIS	FED. AID PROJECT	

MODEL: Default
FILE NAME: s:\OL6300-6399\6346113\Drawings\CAD\Micro-SSA\CAD_Sheets\0160373097O-62W38-074-EX.dgn
9/25/2024 7:56:56 AM

FOR INFORMATION ONLY

STATE OF ILLINOIS
DEPARTMENT OF PUBLIC WORKS & BUILDINGS
DIVISION OF HIGHWAYS

ROUTE NO.	SECTION	COUNTY	TOTAL SHEETS	SHEET NO.
S.B.I. F.A. 61	531-3HB	COOK	29	18
FED. ROAD DIST. NO. 7	ILLINOIS	FED. AID PROJECT		

SHEET NO. 13
22 SHEETS

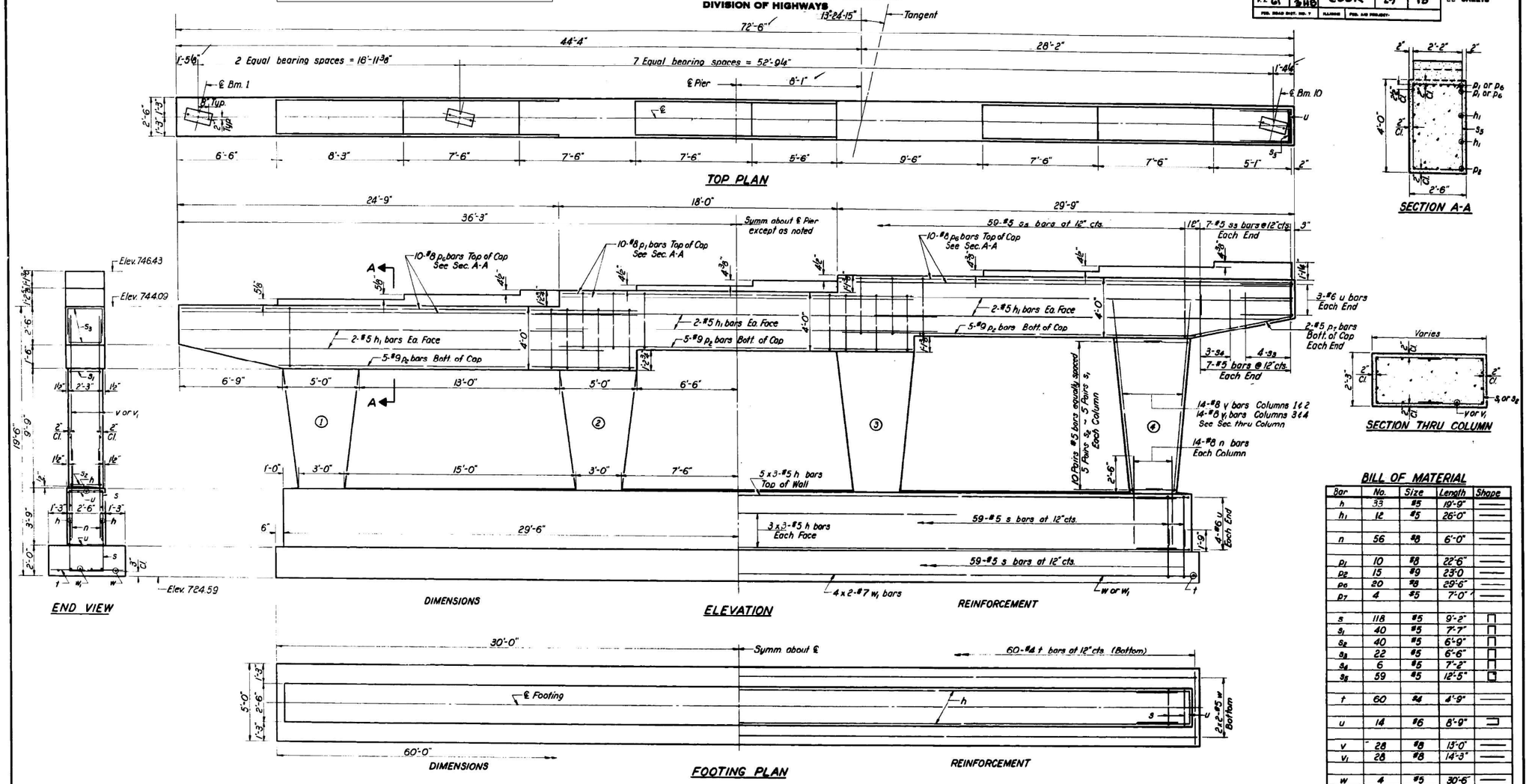

DESIGNED	Walter Perry
CHECKED	R. Kowal
DRAWN	J.L. Armstrong
CHECKED	RK

JULY 31 1964
EXAMINED W. E. Baumann — ENGINEER OF BRIDGE AND TRAFFIC STRUCTURES
PASSED
APPROVED — CHIEF ENGINEER

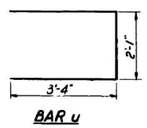

BAR u

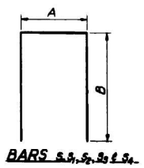

BARS s, s1, s2, s3 & s4

A & B DIMENSIONS

Bar	A	B
s	2'-2"	3'-6"
s1	1'-11"	2'-10"
s2	1'-11"	2'-5"
s3	2'-2"	2'-2"
s4	2'-2"	2'-6"

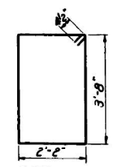

BAR s5

Note:
Space reinforcement in cap to miss anchor bolts.
Min. bar laps = 20 dia. unless otherwise noted.
All edges shall have standard ¾" chamfers except as noted.
Pour steps monolithically with cap.
Bars indicated thus 20 x 3-#5 etc. indicates 20 lines of bars with 3 lengths per line.
Max. Soil Pressure = 2.0 T/□'

BILL OF MATERIAL

Bar	No.	Size	Length	Shape
h	33	#5	19'-9"	
h1	12	#5	26'-0"	
n	56	#8	6'-0"	
p1	10	#8	22'-6"	
p2	15	#9	23'-0"	
p6	20	#8	29'-6"	
p7	4	#5	7'-0"	
s	118	#5	9'-2"	
s1	40	#5	7'-7"	
s2	40	#5	6'-9"	
s3	22	#5	6'-6"	
s4	6	#5	7'-2"	
s5	59	#5	12'-5"	
t	60	#4	4'-9"	
u	14	#6	8'-9"	
v	28	#8	13'-0"	
v1	28	#8	14'-3"	
w	4	#5	30'-6"	
w1	8	#7	30'-9"	
Class X Concrete			Cu. Yds.	86.7
Reinforcement Bars			Lbs.	11,010

PIER #3 ~ S.B. LANE
F.A. RT. 61 SEC. 531-3-HB
COOK COUNTY
STA. 329+18.98

FOR INFORMATION ONLY

STATE OF ILLINOIS
DEPARTMENT OF PUBLIC WORKS & BUILDINGS
DIVISION OF HIGHWAYS

ROUTE NO.	SECTION	COUNTY	TOTAL SHEETS	SHEET NO.
F.A.P. 61	531-3HB	COOK	29	21
FED. ROAD DIST. NO. 7	ILLINOIS	FED. AID PROJECT-		

SHEET NO. 16
22 SHEETS

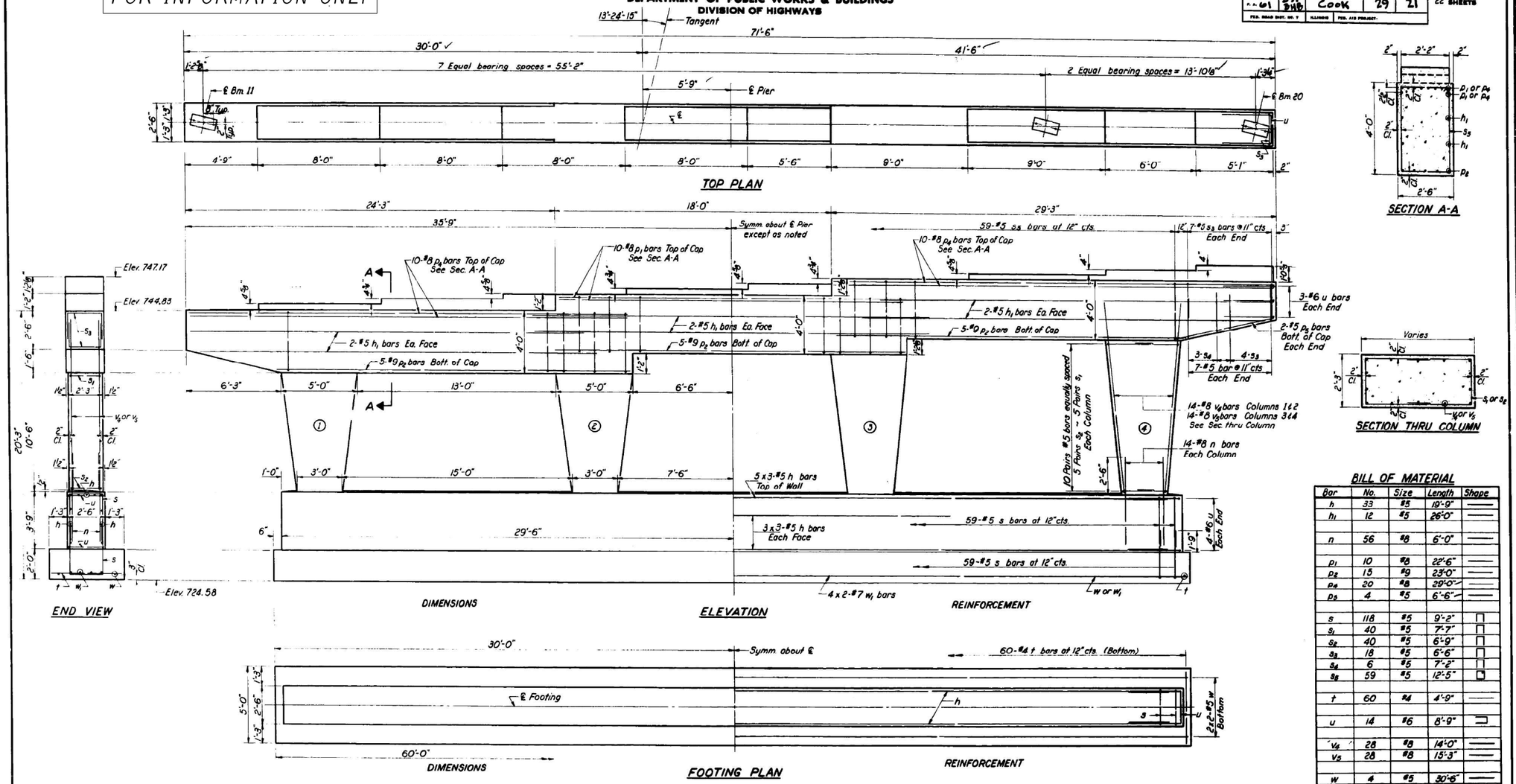

Note:
Space reinforcement in cap to miss anchor bolts.
Min. bar laps = 20 dia. unless otherwise noted.
All edges shall have standard ¾" chamfers except as noted.
Pour steps monolithically with cap.
Bars indicated thus 20 x 3-#5 etc. indicates 20 lines of bars with 3 lengths per line.
Max. Soil Pressure = 2.0 T/□'

BILL OF MATERIAL

Bar	No.	Size	Length	Shape
h	33	#5	19'-9"	
h1	12	#5	26'-0"	
n	56	#8	6'-0"	
p1	10	#8	22'-6"	
p2	15	#9	23'-0"	
p4	20	#8	29'-0"	
p5	4	#5	6'-6"	
s	118	#5	9'-2"	
s1	40	#5	7'-7"	
s2	40	#5	6'-9"	
s3	18	#5	6'-6"	
s4	6	#5	7'-2"	
s6	59	#5	12'-5"	
t	60	#4	4'-9"	
u	14	#6	8'-9"	
v4	28	#8	14'-0"	
v5	28	#8	15'-3"	
w	4	#5	30'-6"	
w1	8	#7	30'-9"	
Class X Concrete			Cu. Yds.	87.4
Reinforcement Bars			Lbs.	11,100

A & B DIMENSIONS

Bar	A	B
s	2'-2"	3'-6"
s1	1'-11"	2'-10"
s2	1'-11"	2'-5"
s3	2'-2"	2'-2"
s4	2'-2"	2'-6"

DESIGNED	Walter Perry
CHECKED	RKowert
DRAWN	J. L. Armstrong
CHECKED	RK

EXAMINED — JULY 31 1964 — H. E. Baumann, Engineer of Bridge and Traffic Structures
PASSED — Engineer of Design and Highways
APPROVED — Director of Highways

PIER #3 ~ N. B. LANE
F.A. RT. 61 SEC. 531-3-HB
COOK COUNTY
STA. 329+18.98

STATE OF ILLINOIS
DEPARTMENT OF PUBLIC WORKS & BUILDINGS
DIVISION OF HIGHWAYS

ROUTE NO.	SECTION	COUNTY	TOTAL SHEETS	SHEET NO.
S. B. I. F. A. 61	531-3-HB	Cook	29	22
FED. ROAD DIST. NO. 7	ILLINOIS	FED. AID PROJECT-		

SHEET NO. 1/1
22 SHEETS

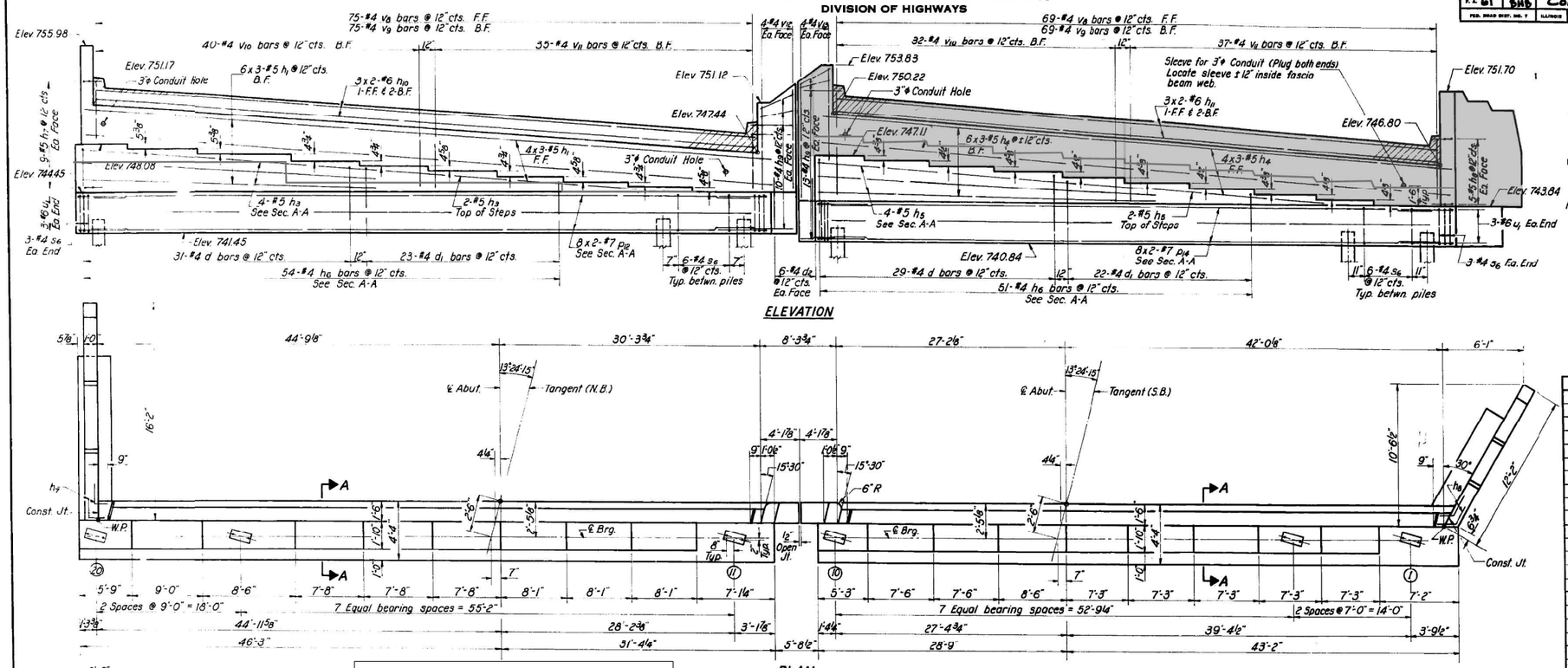

FOR INFORMATION ONLY

BILL OF MATERIAL

Bar	No.	Size	Length	Shape
d	60	#4	5'-0"	
d_1	45	#4	3'-6"	
d_2	12	#4	5'-3"	
h_1	30	#5	26'-0"	
h_3	6	#5	31'-6"	
h_4	30	#5	24'-9"	
h_5	6	#5	29'-3"	
h_6	107	#4	3'-0"	
h_7	18	#5	2'-6"	
h_8	10	#5	2'-6"	
h_9	46	#4	4'-0"	
h_{10}	6	#6	38'-0"	
h_{11}	6	#6	35'-0"	
h_{12}	2	#4	4'-3"	
h_{13}	2	#4	9'-3"	
h_{14}	6	#4	14'-3"	
h_{15}	14	#4	15'-5"	
h_{16}	2	#4	6'-6"	
h_{17}	6	#4	10'-3"	
h_{18}	6	#4	11'-5"	
p_{12}	16	#7	39'-6"	
p_{13}	6	#7	12'-6"	
p_{14}	16	#7	36'-9"	
p_{15}	6	#7	9'-6"	
s_6	144	#4	12'-6"	
s_7	20	#4	10'-5"	
u_1	12	#6	10'-9"	
v_8	144	#4	3'-9"	
v_9	144	#4	3'-9"	
v_{10}	72	#4	4'-6"	
v_{11}	72	#4	2'-9"	
v_{12}	8	#4	6'-6"	
v_{13}	8	#4	7'-9"	
v_{14}	32	#4	9'-6"	
v_{15}	26	#4	6'-0"	

Class X Concrete	Cu. Yds.	145.9
Reinforcement Bars	Lbs.	9450
Concrete Piles	Lin. Ft.	1040
Test Piles (Concrete)	Each	1

DESIGNED	Walter Perry	
CHECKED	L. Kowal	
DRAWN	JL. Armstrong	
CHECKED	RK	

JULY 31 1964
EXAMINED — ENGINEER OF BRIDGE AND TRAFFIC STRUCTURES
PASSED — ENGINEER OF DESIGN
APPROVED — CHIEF HIGHWAY ENGINEER

SOUTH ABUTMENT
F.A. RT. 61 SEC. 531-3-HB
COOK COUNTY
STA. 329+18.98

STATE OF ILLINOIS
DEPARTMENT OF PUBLIC WORKS & BUILDINGS
DIVISION OF HIGHWAYS

ROUTE NO.	SECTION	COUNTY	TOTAL SHEETS	SHEET NO.
F.A.I. 61	531-3HB	COOK	29	23
FED. ROAD DIST. NO. 7	ILLINOIS	FED. AID PROJECT		

SHEET NO. 18
22 SHEETS

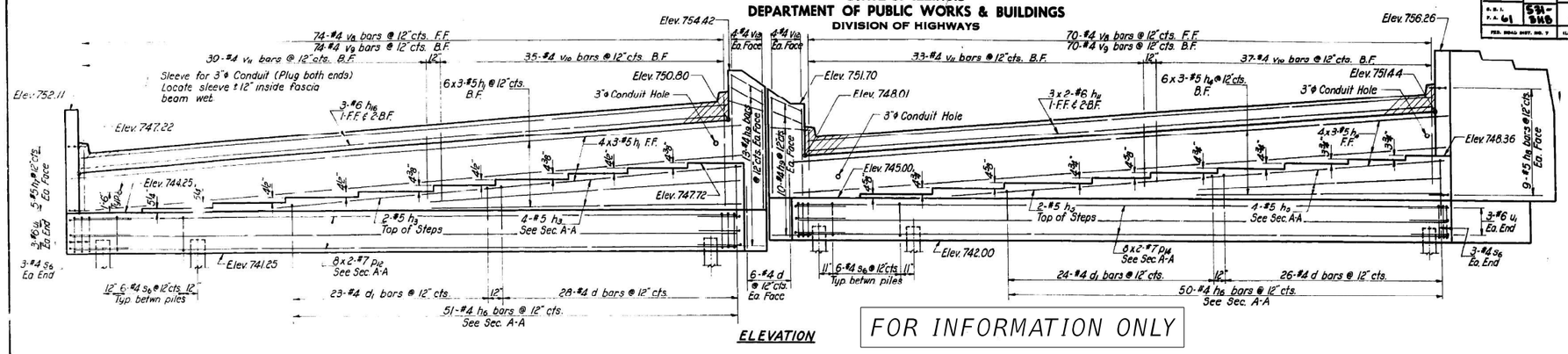

ELEVATION

FOR INFORMATION ONLY

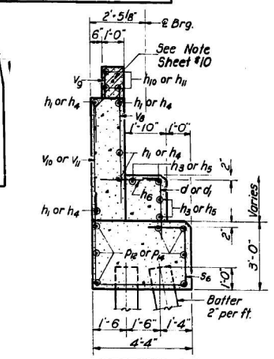

SECTION A-A

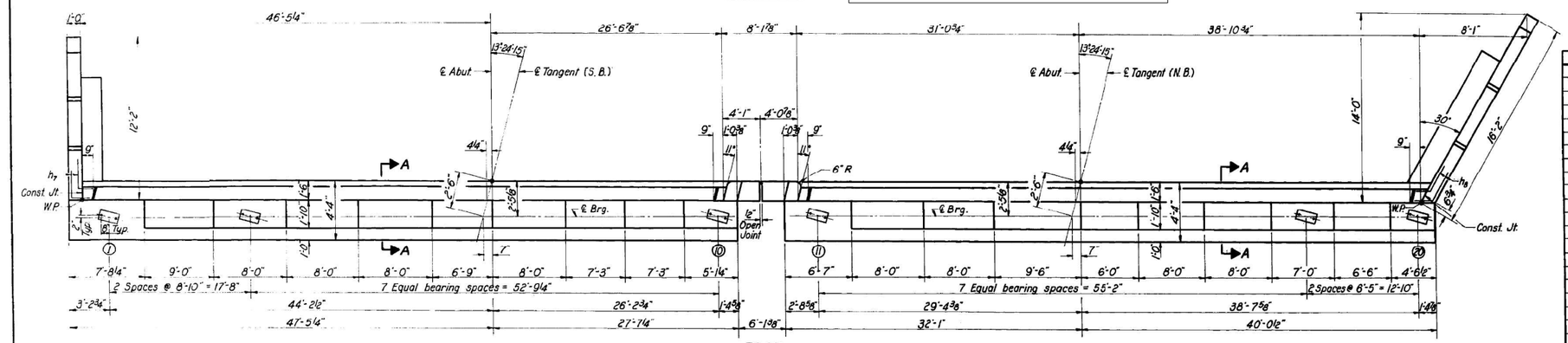

PLAN

PILE DATA
Type - Concrete
Capacity - 35 Ton
Est. Length - 40 Ft.
No. Req'd - 24
Test Piles - 1

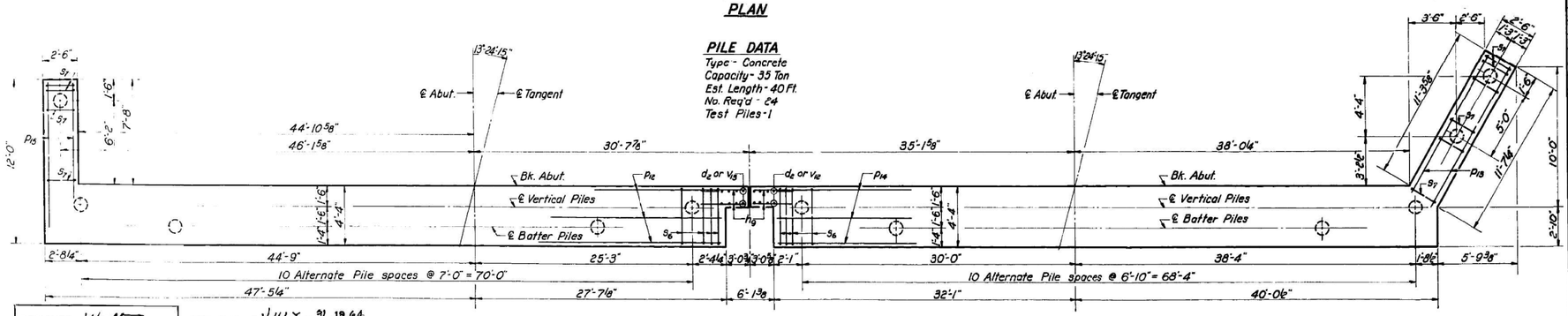

PLAN ~ PILE CAP

BILL OF MATERIAL

Bar	No.	Size	Length	Shape
d	54	#4	5'-0"	
d_1	47	#4	3'-6"	
d_2	12	#4	5'-3"	
h_1	30	#5	26'-0"	
h_3	6	#5	31'-6"	
h_4	30	#5	24'-9"	
h_5	6	#5	29'-3"	
h_{16}	103	#4	3'-0"	
h_7	10	#5	2'-6"	
h_8	18	#5	2'-6"	
h_{10}	46	#4	4'-0"	
h_{10}	6	#6	38'-0"	
h_{11}	6	#6	35'-0"	
h_{12}	2	#4	4'-3"	
h_{13}	2	#4	9'-3"	
h_{14}	6	#4	14'-3"	
h_{15}	14	#4	15'-5"	
h_{16}	2	#4	6'-6"	
h_{17}	6	#4	10'-3"	
h_{18}	6	#4	11'-5"	
p_{12}	16	#7	39'-6"	
p_{13}	6	#7	12'-6"	
p_{14}	16	#7	36'-9"	
p_{15}	6	#7	9'-6"	
s_6	132	#4	12'-6"	
s_7	21	#4	10'-5"	
u_1	12	#6	10'-9"	
v_8	144	#4	3'-9"	
v_9	144	#4	3'-9"	
v_{10}	72	#4	4'-6"	
v_{11}	72	#4	2'-9"	
v_{12}	8	#4	6'-6"	
v_{13}	8	#4	7'-9"	
v_{14}	32	#4	9'-6"	
v_{15}	26	#4	6'-0"	

Class X Concrete	Cu. Yds.	143.8
Reinforcement Bars	Lbs.	9330
Concrete Piles	Lin. Ft.	960
Test Piles (Concrete)	Each	1

DESIGNED	Walter Perry
CHECKED	R. Kowalk
DRAWN	J.L. Armstrong
CHECKED	RK

JULY 31 1964
EXAMINED H.C. Beumann — ENGINEER OF BRIDGE AND TRAFFIC STRUCTURES
PASSED — ENGINEER OF DESIGN
APPROVED V.E. Duff — ENGINEER OF HIGHWAYS

Note:
For details of Wing Walls see sheet #19.
For details of d, d_1, h_7, h_8, s_6, s_7, u_1 & v_9 bars see sheet #17.

NORTH ABUTMENT
F.A. RT. 61 SEC. 531-3-HB
COOK COUNTY
STA. 329+18.98

STATE OF ILLINOIS
DEPARTMENT OF PUBLIC WORKS & BUILDINGS
DIVISION OF HIGHWAYS

ROUTE NO.	SECTION	COUNTY	TOTAL SHEETS	SHEET NO.
F.A. 61	531-3HB	COOK	29	26
FED. ROAD DIST. NO. 7	ILLINOIS	FED. AID PROJECT-		

SHEET NO. 19
22 SHEETS

FOR INFORMATION ONLY

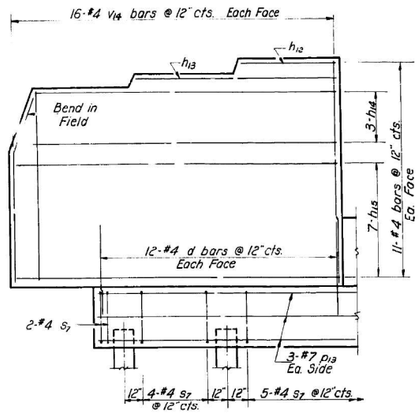

REINFORCEMENT

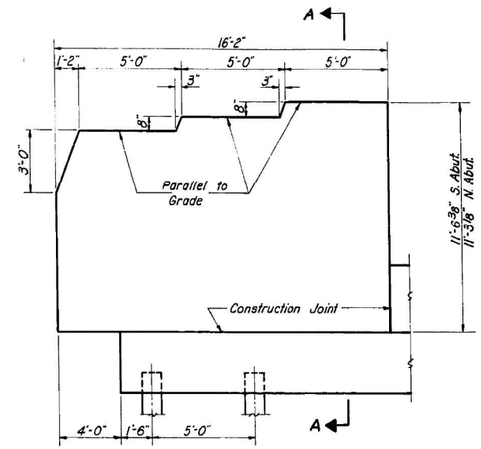

DIMENSIONS

ELEVATION ~ LONG WING

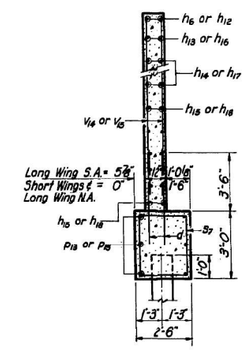

SECTION A-A

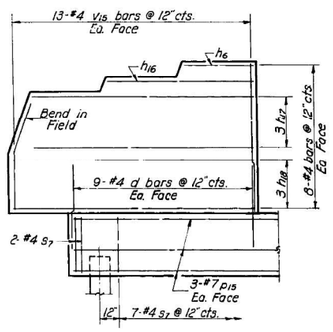

REINFORCEMENT

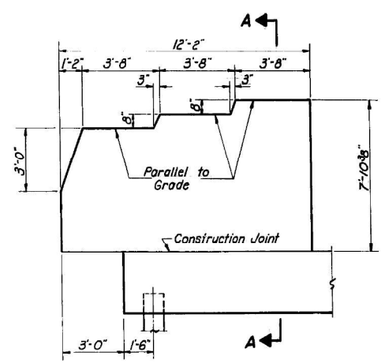

DIMENSIONS

ELEVATION ~ SHORT WING

DESIGNED	Walter Berry	July 31, 1964
CHECKED	R. Lenert	EXAMINED — ENGINEER OF BRIDGE AND TRAFFIC STRUCTURES
DRAWN	JL Armstrong WK	PASSED — ENGINEER OF DESIGN
CHECKED	RK	APPROVED — CHIEF HIGHWAY ENGINEER

WING WALL DETAILS
F.A. RT. 61 SEC. 531-3-HB
COOK COUNTY
STA. 329+18.98

Benchmark: BM 17 – Cut cross on the southwest corner of concrete foundation. Sta. 1345+43.01, 83.81' Right, Elev. 751.399.

Existing Structure: None.

Traffic Control: Shoulder closures are required along Palatine Road and the access ramps to IL-53 during wall construction.

Salvage: None

LEGEND

- Electric
- Pipe Underdrain for Structures, 4"
- Soil Boring

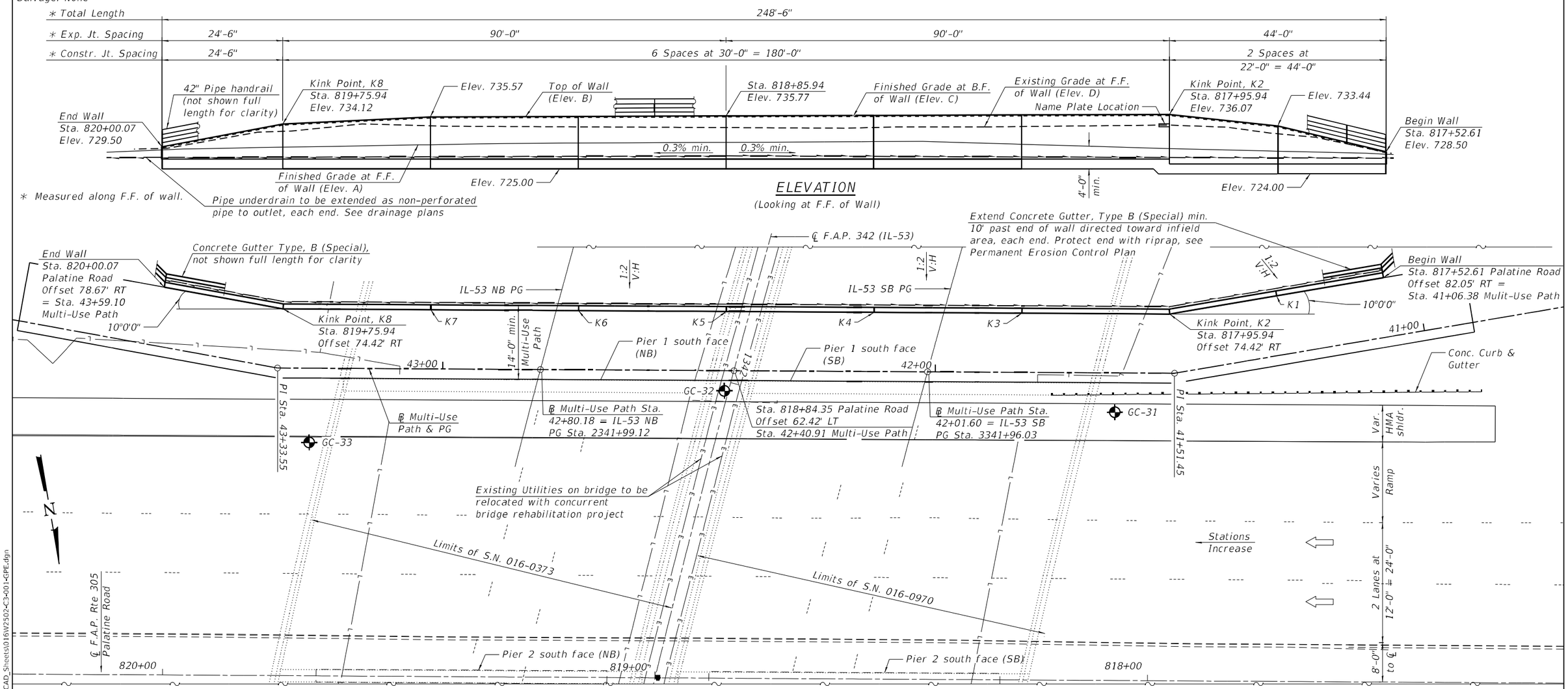

Notes:
1. Offsets are measured from ℄ F.A.P. Rte. 305 Palatine Road to the front face of wall.
2. F.F. = Front Face and B.F. = Back Face
3. Concrete Gutter, Type B (Special) and pipe underdrain not shown for clarity.
4. See sheet 4 of 10 for Elevations A, B, C, and D data.

STA. 817+52.61
RE-BUILT 20XX BY
STATE OF ILLINOIS
F.A.P. Rt. 342 (IL-53)
SEC. (531) BR 23
STR. NO. 016-W2502

NAME PLATE
(See Std. 515001)

NATHAN D. RICK 081-005819 LICENSED STRUCTURAL ENGINEER OF ILLINOIS

Nathan D. Rick, S.E.
Licensed Structural Engineer
State of Illinois No. 081-007039
Registration Expires 11/30/2024

PLAN

DESIGN SPECIFICATIONS
2020 AASHTO LRFD Bridge Design Specifications, 9th Edition with Interims

DESIGN STRESSES
FIELD UNITS
f'c = 3,500 psi (Substructure)
fy = 60,000 psi (Reinforcement)

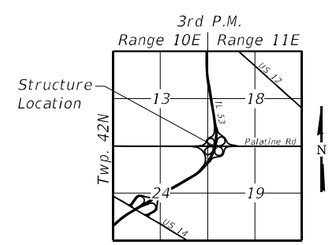

LOCATION SKETCH

GENERAL PLAN AND ELEVATION
RETAINING WALL ALONG F.A.P. RTE 305 (PALATINE ROAD) UNDER F.A.P. 342 (IL-53)
SECTION (531) BR 23
COOK COUNTY
STA. 817+52.61 TO STA. 820+00.07
STRUCTURE NO. 016-W2502

STRAND ASSOCIATES®
1170 SOUTH HOUBOLT ROAD
JOLIET, ILLINOIS 60431
(815) 744-4200
IDFPR NO. 184-001273

USER NAME = codyh	DESIGNED - JAS	REVISED -	
	CHECKED - NDR	REVISED -	
PLOT SCALE = 0.1667 ' / in.	DRAWN - CJH	REVISED -	
PLOT DATE = 9/20/2024	CHECKED - NDR	REVISED -	

STATE OF ILLINOIS
DEPARTMENT OF TRANSPORTATION

GENERAL PLAN AND ELEVATION
STRUCTURE NO. 016-W2502
SHEET 1 OF 10 SHEETS

F.A. RTE.	SECTION	COUNTY	TOTAL SHEETS	SHEET NO.
305	(531) BR 23	COOK	1211	898
		CONTRACT NO. 62W38		
	ILLINOIS	FED. AID PROJECT		

MODEL: Sheet 1
FILE NAME: S:\IOL\6300-6399\6246\113\Drawings\CAD\Micro-SS4\CAD_Sheets\016W2502-C3-001-GPE.dgn
9/20/2024 2:37:04 PM

GENERAL NOTES

1. Reinforcement bars designated (E) shall be epoxy coated.
2. Plan dimensions and details relative to the existing structure have been taken from existing plans are subject to normal construction variations. The Contractor shall field verify existing dimensions and details affecting new construction and make necessary approved adjustments prior to construction or ordering of materials. Such variations shall not be cause for additional compensation for a change in scope of the work, however, the Contractor will be paid for the quantity actually furnished at the unit price bid for the work.

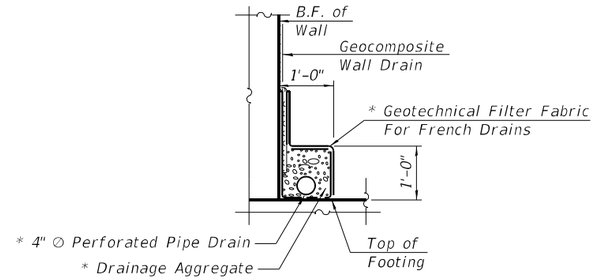

PIPE UNDERDRAIN DETAIL

* Included in the cost of "Pipe Underdrains for Structures 4"

TOTAL BILL OF MATERIAL

Item	Unit	Total
Geotechnical Fabric for Ground Stabilization	SQ YD	390
Slope Wall Removal	SQ YD	700
Structure Excavation	CU YD	2,446
Removal and Disposal of Unsuitable Material for Structures	CU YD	130
Protective Coat	SQ YD	247
Reinforcement Bars, Epoxy Coated	POUND	27,370
Pipe Handrail	FOOT	250
Name Plates	EACH	1
Concrete Structures (Retaining Wall)	CU YD	294
Granular Backfill for Structures	CU YD	1,033
Geocomposite Wall Drain	SQ YD	178
Pipe Underdrains for Structures 4"	FOOT	249
Concrete Gutter, Type B (Special)	FOOT	270
Rock Fill	CU YD	150

INDEX OF SHEETS

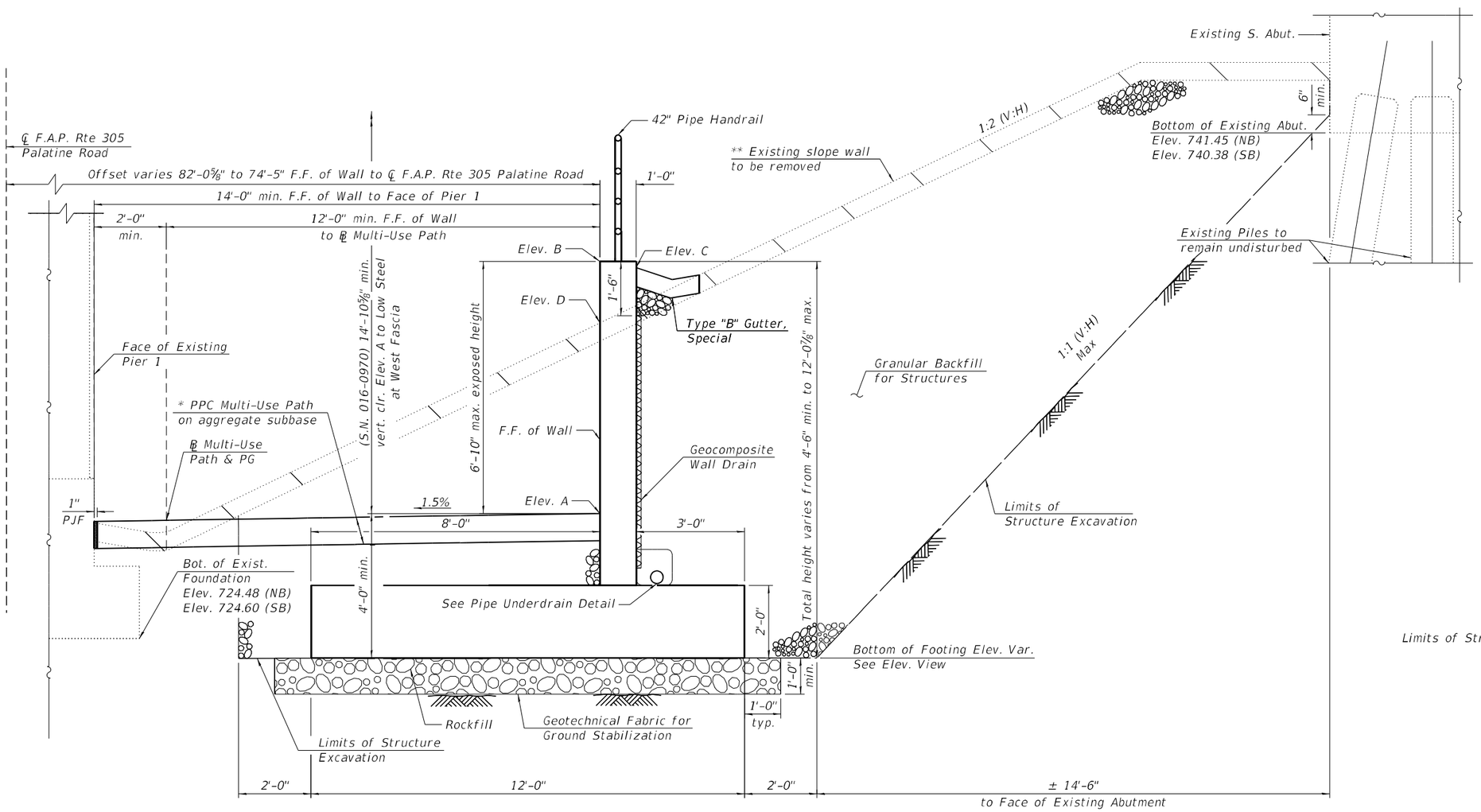

SECTION THRU CAST-IN-PLACE T-TYPE WALL

** Slope wall reconstruction and Multi-Use Path to be included with concurrent bridge rehabilitation project.

LEGEND

Existing slope wall removal

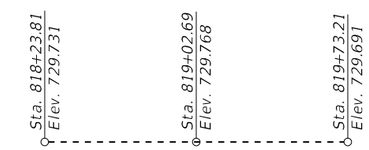

EB PALATINE RD. PROFILE GRADE

(along median edge of pavement from survey)

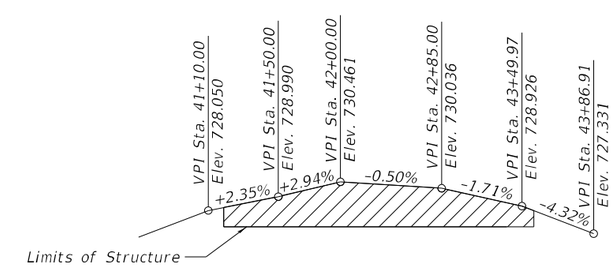

MULTI-USE PATH PROFILE GRADE

(along ℄)

Notes:
1. See sheet 4 of 10 for Elevations A, B, C, and D data.

STRAND ASSOCIATES
1170 SOUTH HOUBOLT ROAD
JOLIET, ILLINOIS 60431
(815) 744-4200
IDFPR NO. 184-001273

USER NAME = codyh	DESIGNED - JAS	REVISED -	
	CHECKED - NDR	REVISED -	
PLOT SCALE = 0:2.0000 ':" / in.	DRAWN - CJH	REVISED -	
PLOT DATE = 9/20/2024	CHECKED - NDR	REVISED -	

STATE OF ILLINOIS
DEPARTMENT OF TRANSPORTATION

GENERAL NOTES, DRAINAGE DETAILS, AND BOM
STRUCTURE NO. 016-W2502

SHEET 2 OF 10 SHEETS

F.A. RTE.	SECTION	COUNTY	TOTAL SHEETS	SHEET NO.
305	(531) BR 23	COOK	1211	899
		CONTRACT NO. 62W38		
		ILLINOIS	FED. AID PROJECT	

MODEL: Default
FILE NAME: S:\IDL6300-63996346113\Drawings\CAD\Micro-SSA\CAD_Sheets\016W2502-C3-002-GN.dgn
9/20/2024 2:37:06 PM

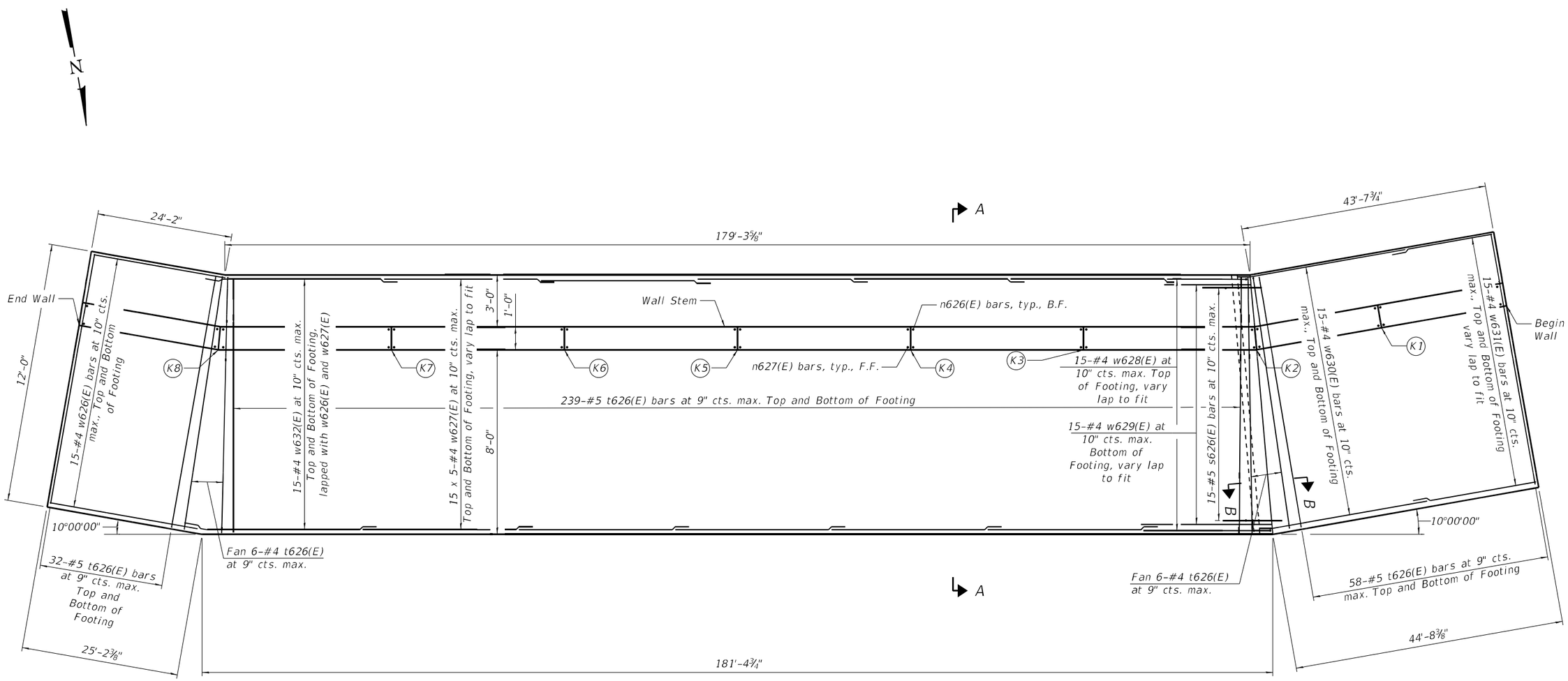

MIN. LAP

#4 = 2'-11"
#5 = 3'-7"
#6 = 4'-4"

Notes:

1. The nominal soil bearing capacity required shall be a minimum of 3,500 psf (The factored bearing resistance required shall be a minimum of 1,925 psf). Contractor shall verify soil properties and notify the engineer if bearing values are not encountered at the bottom of footing elevations.
2. See Wall Details sheet 5 of 10 for section A-A and B-B.
3. See sheet 4 of 10 for Wall Panel Elevation and layout Data.
4. Bars indicated thus 15 x 6-#4 etc. indicate 15 lines of bars with 6 lengths per line.

MODEL: Default
FILE NAME: S:\IDL\6300-6399\6346\113\Drawings\CAD\Micro-SSA\CAD_Sheets\016W2502-C3-003-WPFL.dgn

STRAND ASSOCIATES®
1170 SOUTH HOUBOLT ROAD
JOLIET, ILLINOIS 60431
(815) 744-4200
IDFPR NO. 184-001273

USER NAME = codyh	DESIGNED - JAS	REVISED -	
	CHECKED - NDR	REVISED -	
PLOT SCALE = 0:2.0000 ':" / in.	DRAWN - CJH	REVISED -	
PLOT DATE = 9/20/2024	CHECKED - NDR	REVISED -	

STATE OF ILLINOIS
DEPARTMENT OF TRANSPORTATION

WALL PLAN AND FOUNDATION LAYOUT
STRUCTURE NO. 016-W2502

SHEET 3 OF 10 SHEETS

F.A. RTE.	SECTION	COUNTY	TOTAL SHEETS	SHEET NO.
305	(531) BR 23	COOK	1211	900
		CONTRACT NO. 62W38		
	ILLINOIS	FED. AID PROJECT		

9/20/2024 2:37:07 PM