W. FACE OF PARAPET NB BRIDGE

Location	Station	Offset	Theoretical Grade Elevations	Theoretical Grade Elevations Adjusted for Grinding
S. End N. Approach	2207+57.60	-34.29	751.42	751.45
A3	2207+67.54	-34.45	751.36	751.38
A4	2207+77.48	-34.64	751.29	751.31
N. End N. Approach	2207+87.42	-34.84	751.22	751.25

W. EDGE OF PAVEMENT

Location	Station	Offset	Theoretical Grade Elevations	Theoretical Grade Elevations Adjusted for Grinding
S. End N. Approach	2207+48.43	-24.00	751.28	751.31
A3	2207+58.25	-24.00	751.21	751.24
A4	2207+68.06	-24.00	751.15	751.17
N. End N. Approach	2207+77.86	-24.00	751.08	751.10

STAGE I/II CONST. JT.

Location	Station	Offset	Theoretical Grade Elevations	Theoretical Grade Elevations Adjusted for Grinding
S. End N. Approach	2207+28.50	-1.80	750.98	751.00
A3	2207+38.50	-1.92	750.91	750.93
A4	2207+48.49	-2.06	750.84	750.87
N. End N. Approach	2207+58.49	-2.21	750.78	750.80

NB PG

Location	Station	Offset	Theoretical Grade Elevations	Theoretical Grade Elevations Adjusted for Grinding
S. End N. Approach	2207+26.87	+.00	750.95	750.98
A3	2207+36.77	+.00	750.89	750.91
A4	2207+46.64	+.00	750.82	750.84
N. End N. Approach	2207+56.51	+.00	750.75	750.77

E. EDGE OF PAVEMENT

Location	Station	Offset	Theoretical Grade Elevations	Theoretical Grade Elevations Adjusted for Grinding
S. End N. Approach	2207+16.00	12.00	750.78	750.80
A3	2207+25.93	12.00	750.72	750.74
A4	2207+35.85	12.00	750.65	750.67
N. End N. Approach	2207+45.75	12.00	750.58	750.60

E. FACE OF PARAPET AND GUTTER LINE NB

Location	Station	Offset	Theoretical Grade Elevations	Theoretical Grade Elevations Adjusted for Grinding
S. End N. Approach	2207+04.76	24.33	750.60	750.62
A3	2207+14.80	24.25	750.55	750.57
A4	2207+24.85	24.15	750.48	750.51
N. End N. Approach	2207+34.89	24.04	750.42	750.44

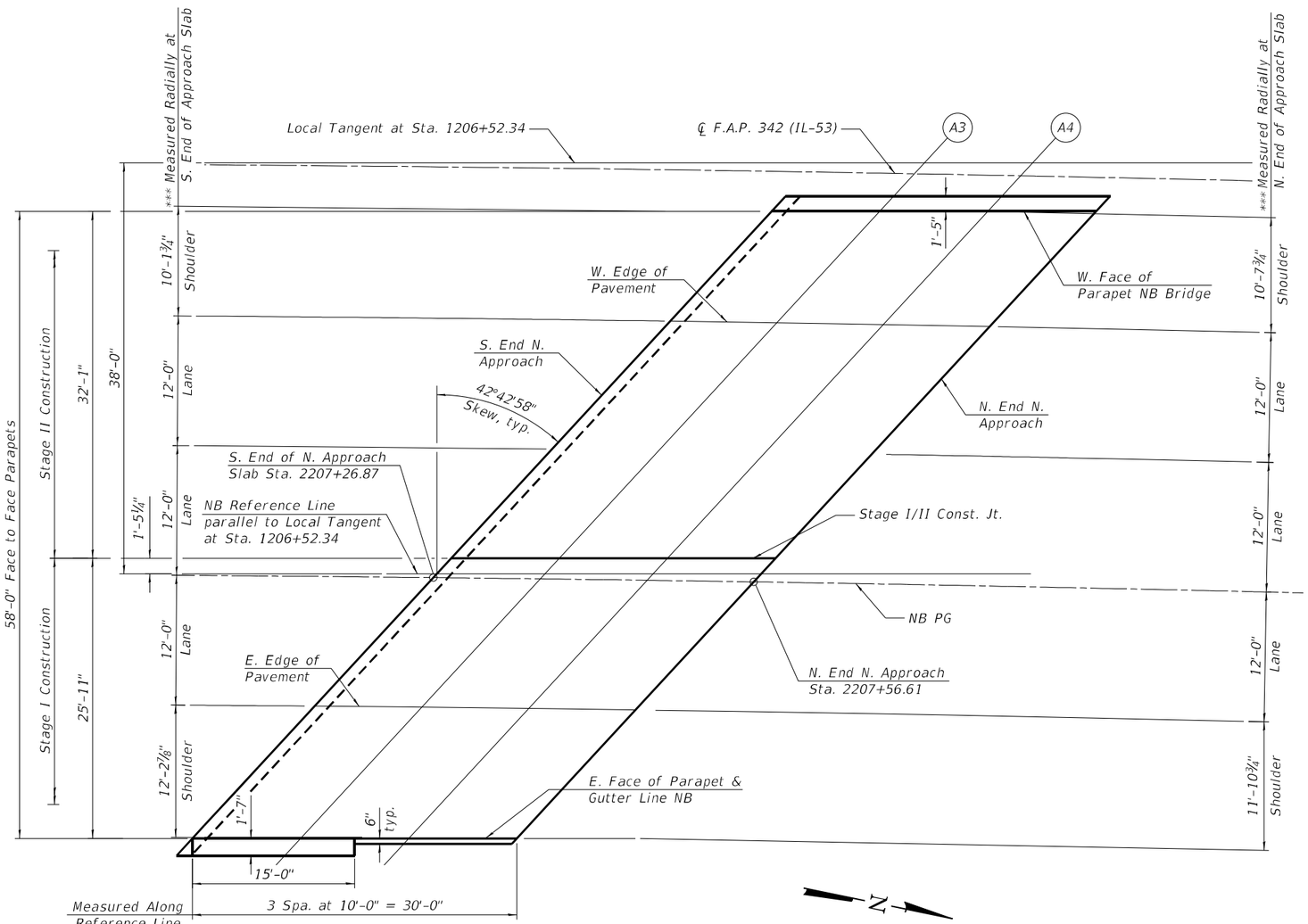

PLAN
North Approach

*** The reported measured shoulder distance was taken radially from the intersection of the outside lane line at the limits of the bridge deck taken at the front face of the parapet.

Notes:
1. All dimensions measured perpendicular to reference line unless otherwise noted.
2. For Offset sketch see sheet 2 of 66.

W. FACE OF PARAPET & GUTTER LINE SB

Location	Station	Offset	Theoretical Grade Elevations	Theoretical Grade Elevations Adjusted for Grinding
S. End S. Approach	3205+69.61	-24.09	751.61	751.63
A1	3205+79.57	-23.97	751.64	751.67
A2	3205+89.53	-23.88	751.68	751.70
N. End S. Approach	3205+99.49	-23.80	751.70	751.72

W. EDGE OF PAVEMENT

Location	Station	Offset	Theoretical Grade Elevations	Theoretical Grade Elevations Adjusted for Grinding
S. End S. Approach	3205+58.19	-12.00	751.33	751.35
A1	3205+68.29	-12.00	751.36	751.39
A2	3205+78.38	-12.00	751.40	751.42
N. End S. Approach	3205+88.45	-12.00	751.44	751.46

SB PG

Location	Station	Offset	Theoretical Grade Elevations	Theoretical Grade Elevations Adjusted for Grinding
S. End S. Approach	3205+46.79	0.00	751.05	751.07
A1	3205+56.93	0.00	751.08	751.11
A2	3205+67.05	0.00	751.12	751.14
N. End S. Approach	3205+77.16	0.00	751.16	751.18

STAGE III/IV CONST. JT.

Location	Station	Offset	Theoretical Grade Elevations	Theoretical Grade Elevations Adjusted for Grinding
S. End S. Approach	3205+45.36	1.49	751.01	751.03
A1	3205+55.36	1.64	751.05	751.07
A2	3205+65.37	1.78	751.08	751.10
N. End S. Approach	3205+75.37	1.90	751.11	751.13

E. EDGE OF PAVEMENT

Location	Station	Offset	Theoretical Grade Elevations	Theoretical Grade Elevations Adjusted for Grinding
S. End S. Approach	3205+23.78	24.00	750.49	750.51
A1	3205+34.00	24.00	750.52	750.54
A2	3205+44.20	24.00	750.56	750.58
N. End S. Approach	3205+54.39	24.00	750.60	750.62

E. FACE OF PARAPET SB BRIDGE

Location	Station	Offset	Theoretical Grade Elevations	Theoretical Grade Elevations Adjusted for Grinding
S. End S. Approach	3205+15.06	33.02	750.28	750.30
A1	3205+25.12	33.22	750.31	750.33
A2	3205+35.17	33.41	750.34	750.36
N. End S. Approach	3205+45.22	33.58	750.37	750.39

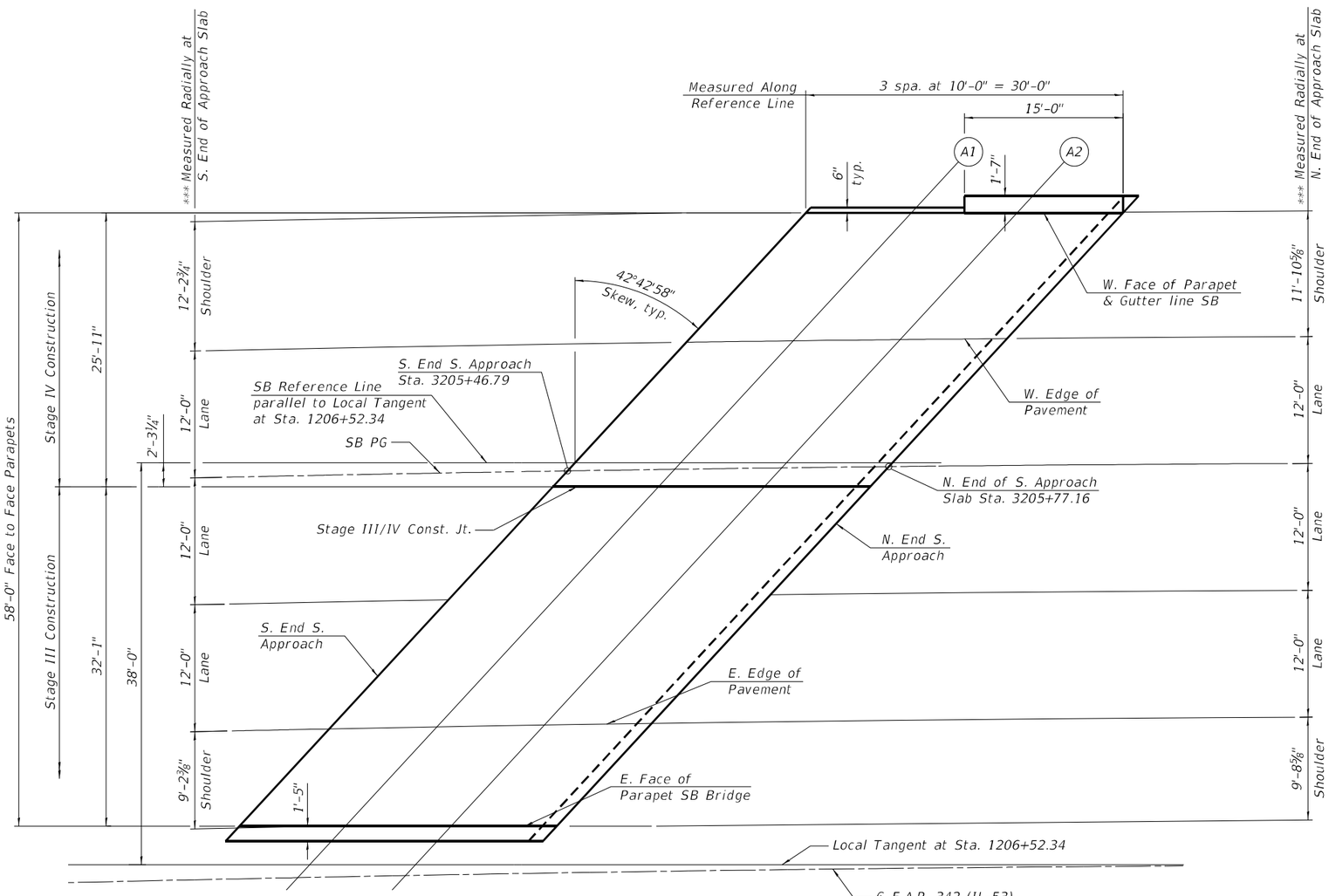

PLAN
South Approach

*** The reported measured shoulder distance was taken radially from the intersection of the outside lane line at the limits of the bridge deck taken at the front face of the parapet.

Notes:
1. All dimensions measured perpendicular to reference line unless otherwise noted.
2. For offset sketch see sheet 2 of 66.

W. FACE OF PARAPET & GUTTER LINE SB

Location	Station	Offset	Theoretical Grade Elevations	Theoretical Grade Elevations Adjusted for Grinding
S. End N. Approach	3207+98.55	-25.67	751.05	751.07
A3	3208+08.50	-25.94	750.98	751.00
A4	3208+18.45	-26.23	750.91	750.93
N. End N. Approach	3208+28.41	-26.53	750.83	750.86

W. EDGE OF PAVEMENT

Location	Station	Offset	Theoretical Grade Elevations	Theoretical Grade Elevations Adjusted for Grinding
S. End N. Approach	3207+86.58	-12.00	750.87	750.89
A3	3207+96.34	-12.00	750.80	750.82
A4	3208+06.08	-12.00	750.72	750.74
N. End N. Approach	3208+15.82	-12.00	750.64	750.66

SB PG

Location	Station	Offset	Theoretical Grade Elevations	Theoretical Grade Elevations Adjusted for Grinding
S. End N. Approach	3207+76.01	0.00	750.72	750.74
A3	3207+85.80	0.00	750.64	750.66
A4	3207+95.58	0.00	750.56	750.58
N. End N. Approach	3208+05.35	0.00	750.49	750.51

STAGE III/IV CONST. JT.

Location	Station	Offset	Theoretical Grade Elevations	Theoretical Grade Elevations Adjusted for Grinding
S. End N. Approach	3207+75.29	0.81	750.71	750.73
A3	3207+85.29	0.58	750.63	750.65
A4	3207+95.29	0.33	750.56	750.58
N. End N. Approach	3208+05.29	0.07	750.48	750.51

E. EDGE OF PAVEMENT

Location	Station	Offset	Theoretical Grade Elevations	Theoretical Grade Elevations Adjusted for Grinding
S. End N. Approach	3207+54.70	24.00	750.40	750.42
A3	3207+64.56	24.00	750.33	750.35
A4	3207+74.41	24.00	750.25	750.27
N. End N. Approach	3207+84.25	24.00	750.17	750.19

E. FACE OF PARAPET SB BRIDGE

Location	Station	Offset	Theoretical Grade Elevations	Theoretical Grade Elevations Adjusted for Grinding
S. End N. Approach	3207+46.22	33.47	750.27	750.29
A3	3207+56.28	33.29	750.20	750.22
A4	3207+66.33	33.09	750.13	750.15
N. End N. Approach	3207+76.38	32.87	750.06	750.08

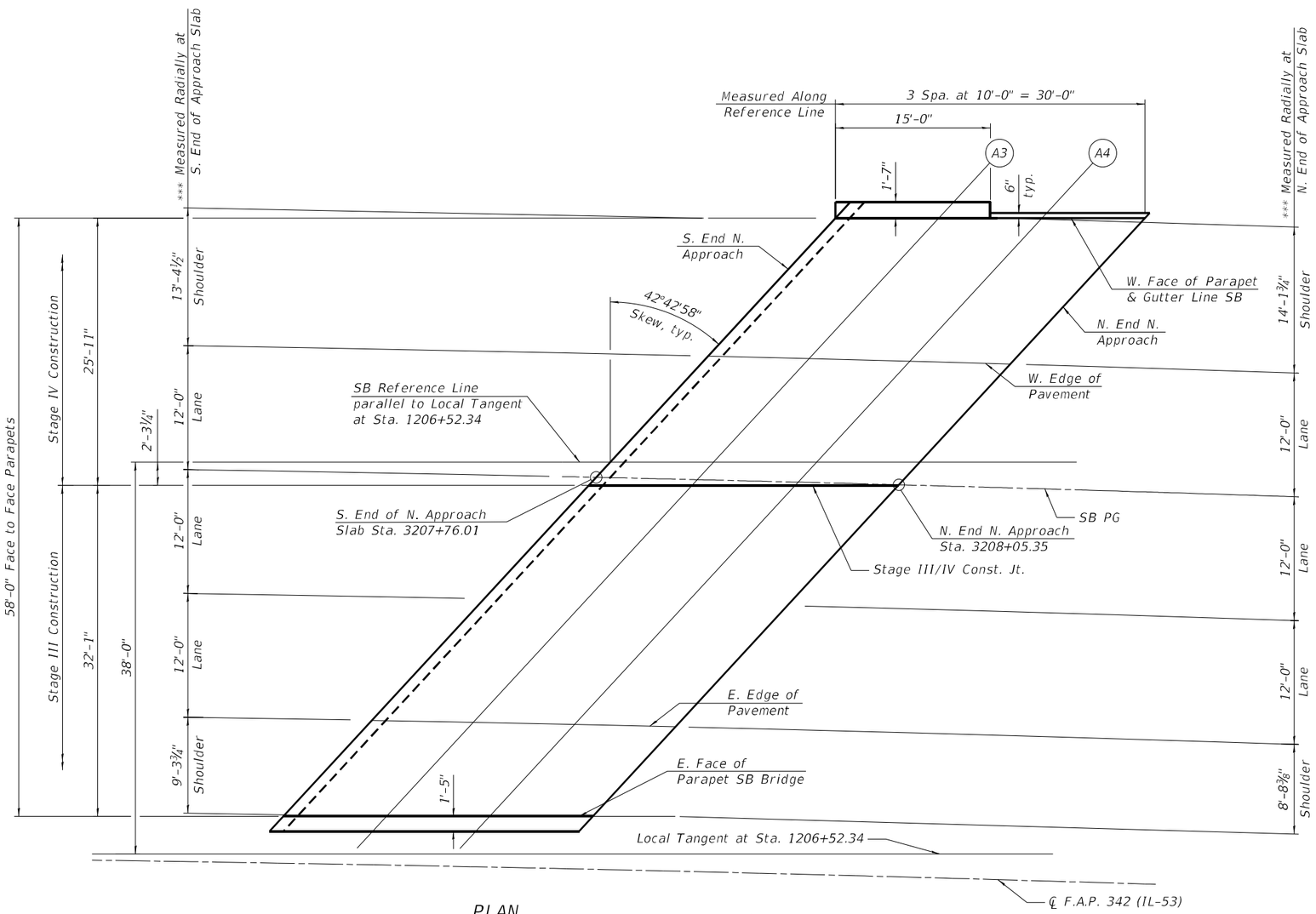

PLAN
North Approach

*** The reported measured shoulder distance was taken radially from the intersection of the outside lane line at the limits of the bridge deck taken at the front face of the parapet.

Notes:
1. All dimensions measured perpendicular to reference line unless otherwise noted.
2. For offset sketch see sheet 2 of 66.

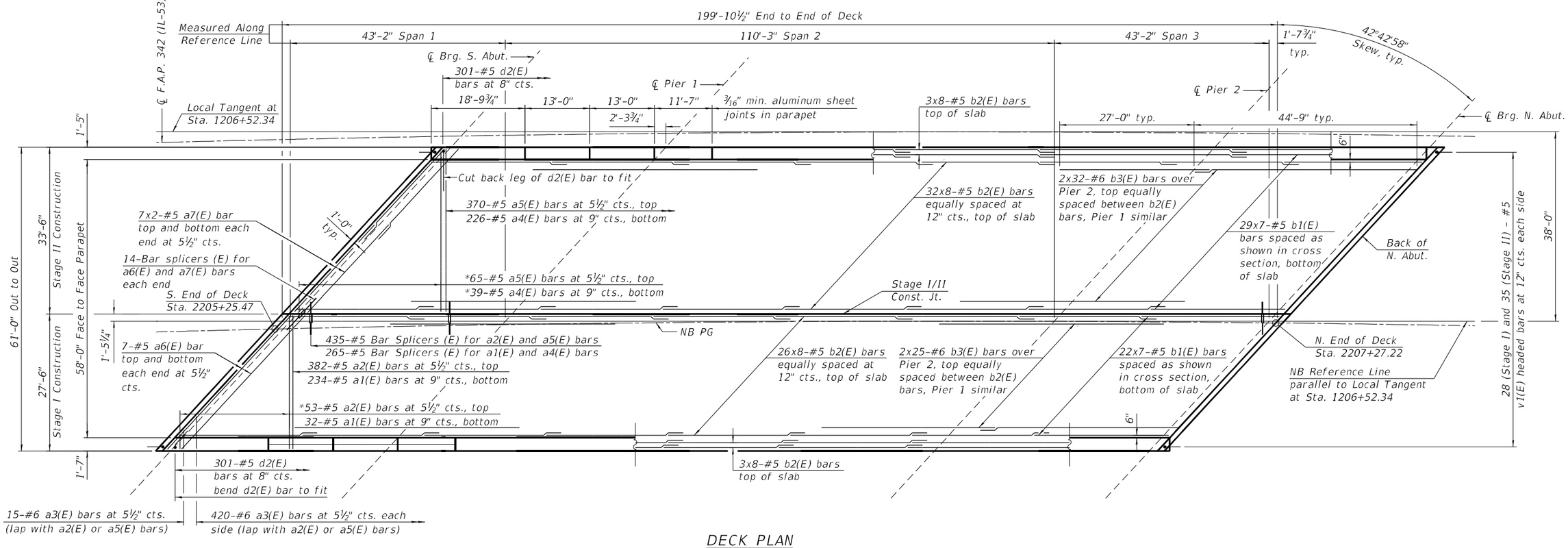

DECK PLAN

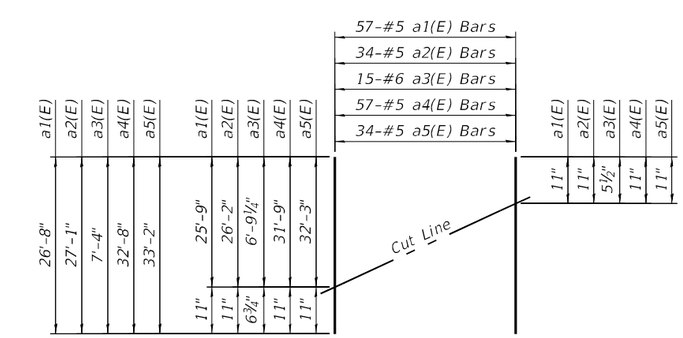

FIELD CUTTING DIAGRAM

* Order bars full length. Cut to fit skew and use remainder of bars in opposite end of deck. Bars shorter than minimum lap length do not need to be placed in the deck.

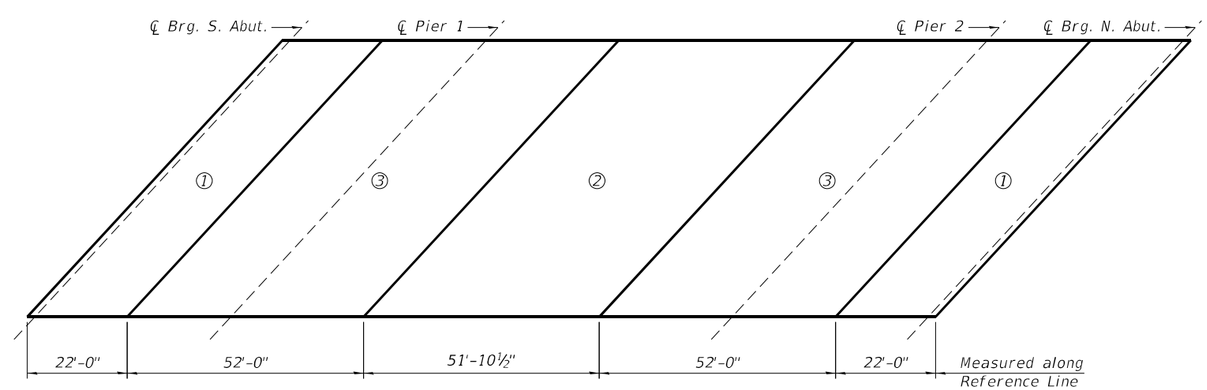

DECK POUR SEQUENCE

(NB shown, SB similar)

When the deck pour is stopped for the day at the transverse bonded construction joint in the deck pouring sequence as shown, the next pour shall not be made until both of the following are met:

1. At least 72 hours shall have elapsed from the end of the previous pour.
2. The concrete strength shall have attained a minimum flexural strength of 675 psi or a minimum compressive strength of 4,000 psi.

MINIMUM BAR LAP

#5 Bar = 3'-6"
#6 Bar = 3'-7"

Notes:
1. Bars indicated thus 20 x 3-#5 etc. indicates 20 lines of bars with 3 lengths per line.
2. Work this sheet with sheets 20 and 24 of 66.
3. For Offset sketch, see sheet 2 of 66.

STRAND ASSOCIATES
1170 SOUTH HOUBOLT ROAD
JOLIET, ILLINOIS 60431
(815) 744-4200
IDFPR NO. 184-001273

USER NAME = codyh	DESIGNED - TJE	REVISED -	
	CHECKED - NDR	REVISED -	
PLOT SCALE = 0:2.0000 ':" / in.	DRAWN - CJH	REVISED -	
PLOT DATE = 9/20/2024	CHECKED - TJE	REVISED -	

STATE OF ILLINOIS
DEPARTMENT OF TRANSPORTATION

DECK PLAN
STRUCTURE NO. 016-0376 (NB)

SHEET 19 OF 66 SHEETS

F.A.P. RTE.	SECTION	COUNTY	TOTAL SHEETS	SHEET NO.
342	(531) BR 23	COOK	1211	704

CONTRACT NO. 62W38

ILLINOIS | FED. AID PROJECT

MODEL: Default
FILE NAME: S:\OL\6300-6399\6346\113\Drawings\CAD\Micro-SS4\CAD_Sheets\0160376112-C3-019-DP-SA1.dgn
9/20/2024 3:11:20 PM

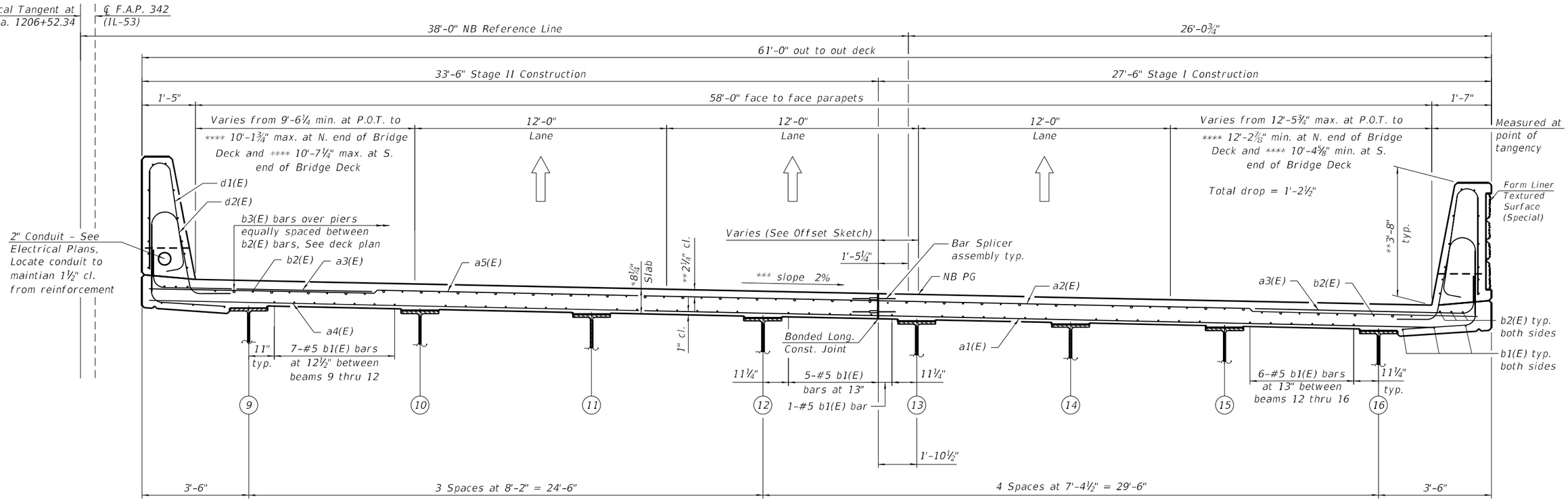

NB CROSS SECTION

(Looking North)

* Prior to Grinding
** After Grinding
*** Measured Radially
**** The reported measured shoulder distance was taken radially from the intersection of the outside lane line at the limits of the bridge deck taken at the front face of the parapet.

Notes:
1. All dimensions measured perpendicular to reference line unless otherwise noted.
2. For offset sketch see sheet 2 of 66.
3. See sheet 24 of 66 for bill of materials.

MODEL: Default
FILE NAME: S:\IDL\6300-639916346\113\Drawings\CAD\Micros-SSA\CAD_Sheets\016037611 21-C3-020-DCS-SAL.dgn

STRAND ASSOCIATES
1170 SOUTH HOUBOLT ROAD
JOLIET, ILLINOIS 60431
(815) 744-4200
IDFPR NO. 184-001273

USER NAME = codyh	DESIGNED - TJE	REVISED -	
	CHECKED - NDR	REVISED -	
PLOT SCALE = 0:2.0000 ':" / in.	DRAWN - CJH	REVISED -	
PLOT DATE = 9/20/2024	CHECKED - TJE	REVISED -	

STATE OF ILLINOIS
DEPARTMENT OF TRANSPORTATION

DECK CROSS SECTION
STRUCTURE NO. 016-0376 (NB)

SHEET 20 OF 66 SHEETS

F.A.P. RTE.	SECTION	COUNTY	TOTAL SHEETS	SHEET NO.
342	(531) BR 23	COOK	1211	705
		CONTRACT NO. 62W38		
		ILLINOIS	FED. AID PROJECT	

9/20/2024 3:11:21 PM

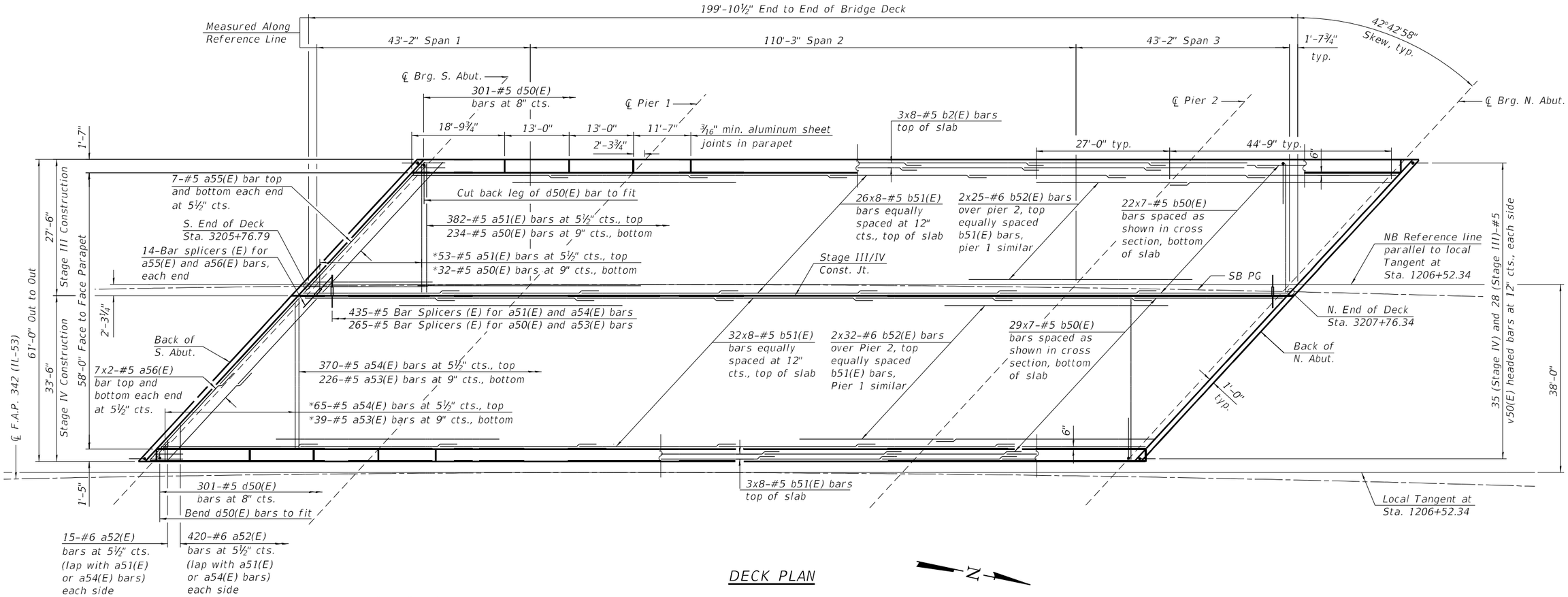

DECK PLAN

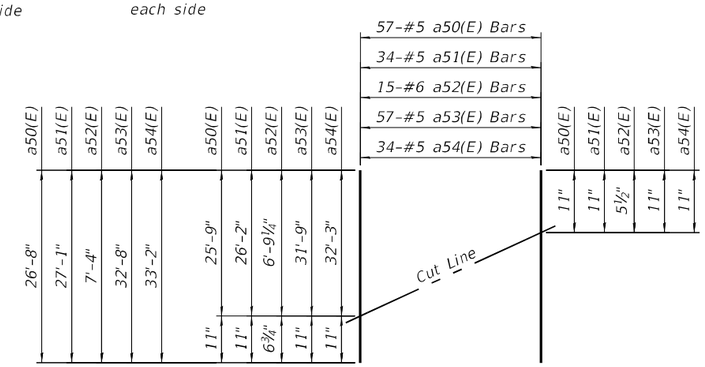

FIELD CUTTING DIAGRAM

* Order bars full length. Cut to fit skew and use remainder of bars in opposite end of deck. Bars shorther than minimum lap length do not need to be placed in the deck.

MINIMUM BAR LAP

#5 Bar = 3'-6"
#6 Bar = 3'-7"

Notes:

1. Bars indicated thus 20 x 3-#5 etc. indicates 20 lines of bars with 3 lengths per line.
2. Work this sheet with sheets 22 and 24 of 66.
3. For Offset sketch, see sheet 2 of 66.

STRAND ASSOCIATES
1170 SOUTH HOUBOLT ROAD
JOLIET, ILLINOIS 60431
(815) 744-4200
IDFPR NO. 184-001273

USER NAME = codyh	DESIGNED - TJE	REVISED -	
	CHECKED - NDR	REVISED -	
PLOT SCALE = 0:2.0000 ':" / in.	DRAWN - CJH	REVISED -	
PLOT DATE = 9/20/2024	CHECKED - TJE	REVISED -	

STATE OF ILLINOIS
DEPARTMENT OF TRANSPORTATION

DECK PLAN
STRUCTURE NO. 016-1121 (SB)

SHEET 21 OF 66 SHEETS

F.A.P. RTE.	SECTION	COUNTY	TOTAL SHEETS	SHEET NO.
342	(531) BR 23	COOK	1211	706
		CONTRACT NO. 62W38		
	ILLINOIS	FED. AID PROJECT		

MODEL: Default
FILE NAME: S:\IDL\6300-63991\6346\113\Drawings\CAD\Micros-SSA\CAD_Sheets\016037611 21-C3-021-DP-SAL.dgn
9/20/2024 3:11:22 PM

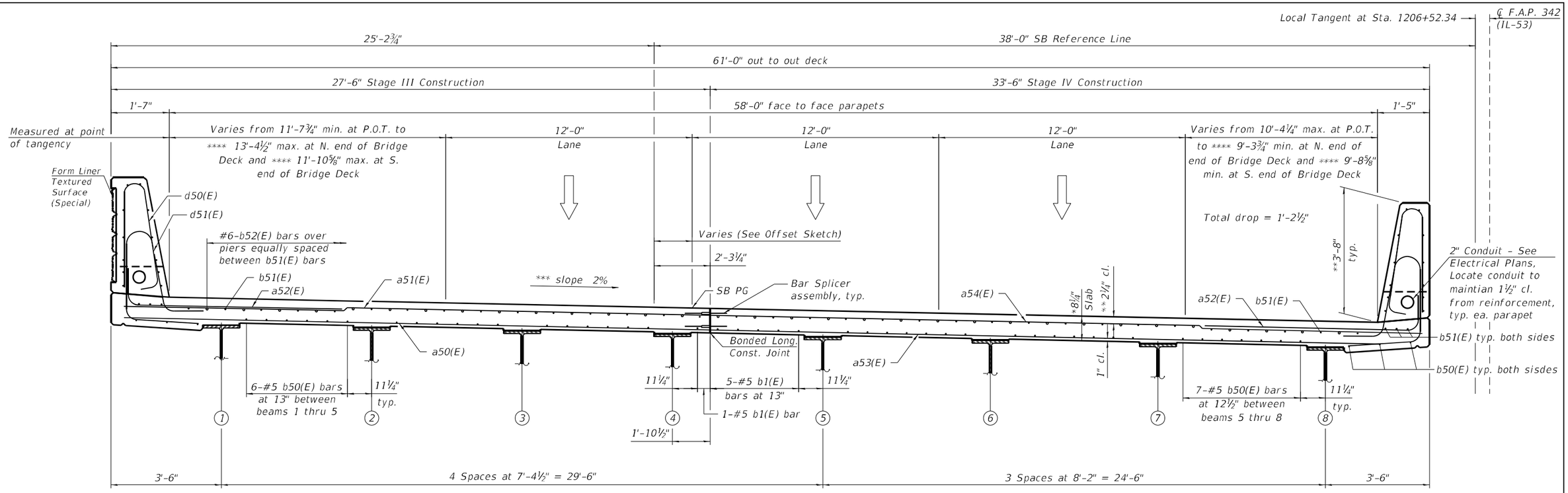

SB CROSS SECTION

(Looking North)

* Prior to Grinding
** After Grinding
*** Measured Radially
**** The reported measured shoulder distance was taken radially from the intersection of the outside lane line at the limits of the bridge deck taken at the front face of the parapet.

Notes:
1. All dimensions measured perpendicular to reference line unless otherwise noted.
2. For offset sketch, see sheet 2 of 66.
3. See sheet 24 of 66 for bill of materials.

MODEL: Default
FILE NAME: S:\IOL\6300-6399\6246\113\Drawings\CAD\Micro-SS4\CAD_Sheets\0160376112 1-C3-022-DCS-SAI.dgn

9/20/2024 3:11:23 PM

STRAND ASSOCIATES
1170 SOUTH HOUBOLT ROAD
JOLIET, ILLINOIS 60431
(815) 744-4200
IDFPR NO. 184-001273

USER NAME = codyh	DESIGNED - TJE	REVISED -	
	CHECKED - NDR	REVISED -	
PLOT SCALE = 0:2.0000 ':" / in.	DRAWN - CJH	REVISED -	
PLOT DATE = 9/20/2024	CHECKED - TJE	REVISED -	

STATE OF ILLINOIS
DEPARTMENT OF TRANSPORTATION

DECK CROSS SECTION
STRUCTURE NO. 016-1121 (SB)

SHEET 22 OF 66 SHEETS

F.A.P. RTE.	SECTION	COUNTY	TOTAL SHEETS	SHEET NO.
342	(531) BR 23	COOK	1211	707
		CONTRACT NO. 62W38		
	ILLINOIS	FED. AID PROJECT		

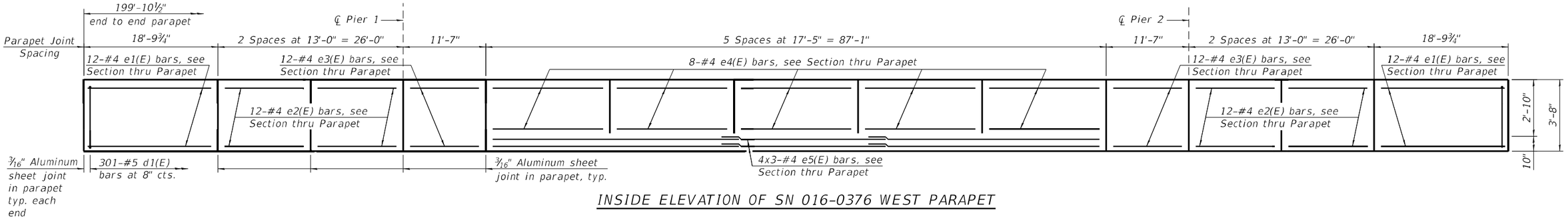

INSIDE ELEVATION OF SN 016-0376 WEST PARAPET

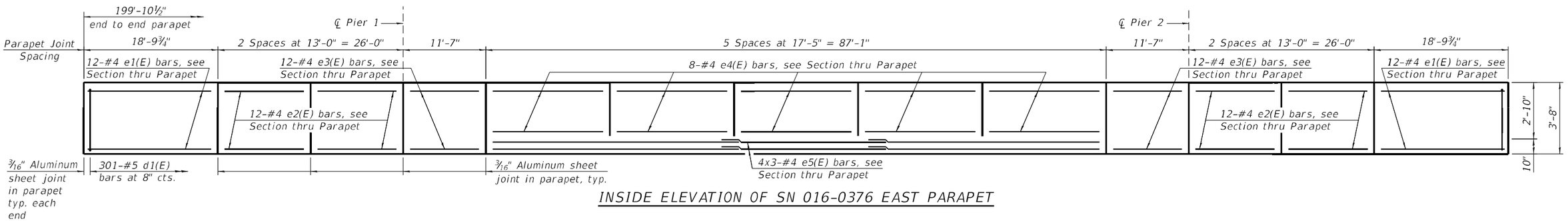

INSIDE ELEVATION OF SN 016-0376 EAST PARAPET

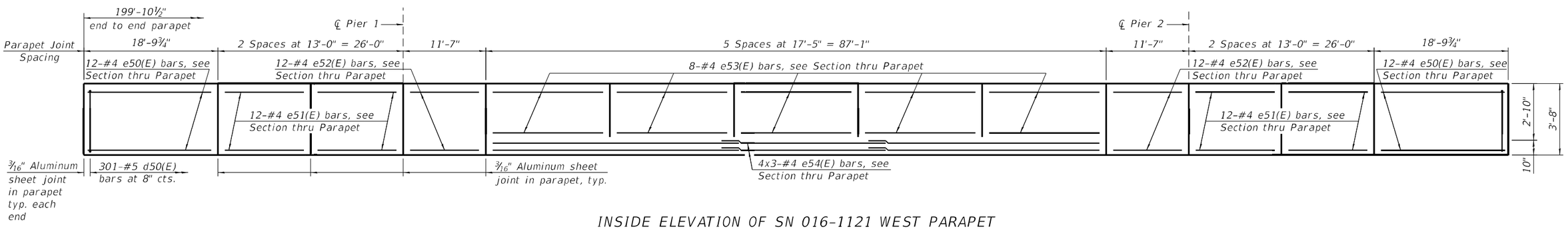

INSIDE ELEVATION OF SN 016-1121 WEST PARAPET

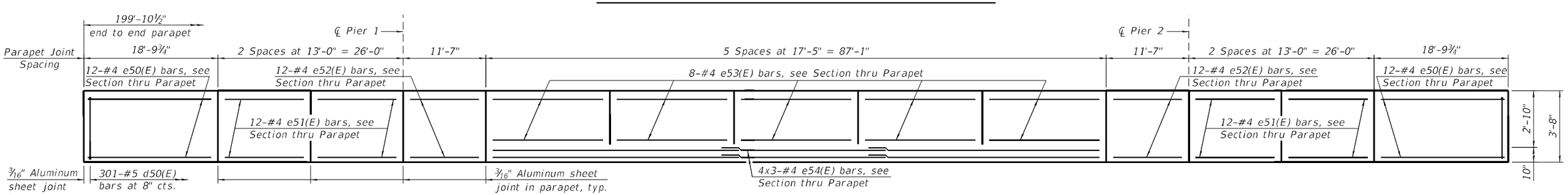

INSIDE ELEVATION OF SN 016-1121 EAST PARAPET

MINIMUM BAR LAP

#4 Bar = 2'-5"

Notes:
1. See sheet 24 of 66 for bar quantities.

STRAND ASSOCIATES
1170 SOUTH HOUBOLT ROAD
JOLIET, ILLINOIS 60431
(815) 744-4200
IDFPR NO. 184-001273

USER NAME = codyh	DESIGNED - TJE	REVISED -	
	CHECKED - NDR	REVISED -	
PLOT SCALE = 0:2.0000 ':" / in.	DRAWN - CJH	REVISED -	
PLOT DATE = 9/20/2024	CHECKED - TJE	REVISED -	

STATE OF ILLINOIS
DEPARTMENT OF TRANSPORTATION

PARAPET ELEVATIONS
STRUCTURE NO. 016-0376 (NB) AND 016-1121 (SB)

SHEET 23 OF 66 SHEETS

F.A.P. RTE.	SECTION	COUNTY	TOTAL SHEETS	SHEET NO.
342	(531) BR 23	COOK	1211	708
		CONTRACT NO. 62W38		
		ILLINOIS	FED. AID PROJECT	

MODEL: Default
FILE NAME: S:\OL\6300-6399\6346\113\Drawings\CAD\Micros-SS4\CAD_Sheets\016037611 2-C3-023-PE-S4L.dgn
9/20/2024 3:11:24 PM

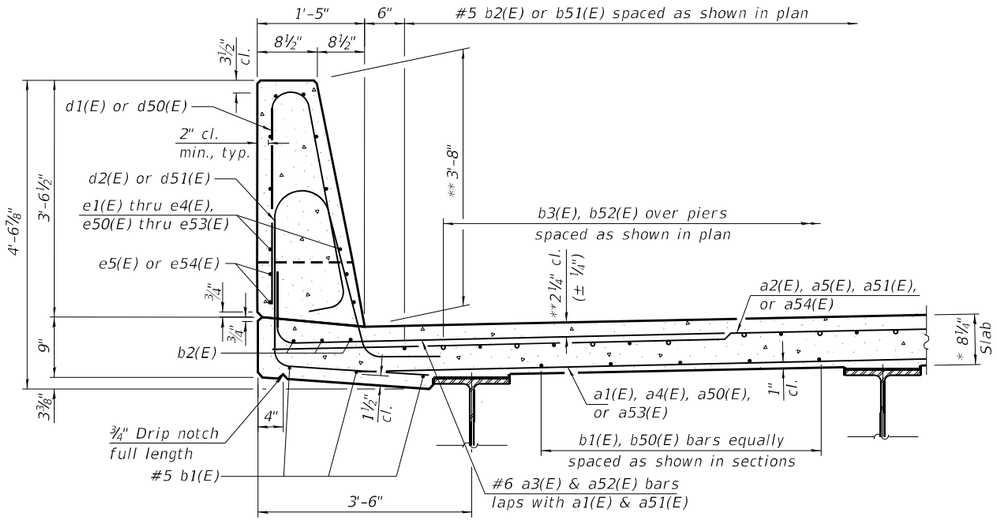

SECTION THRU PARAPET

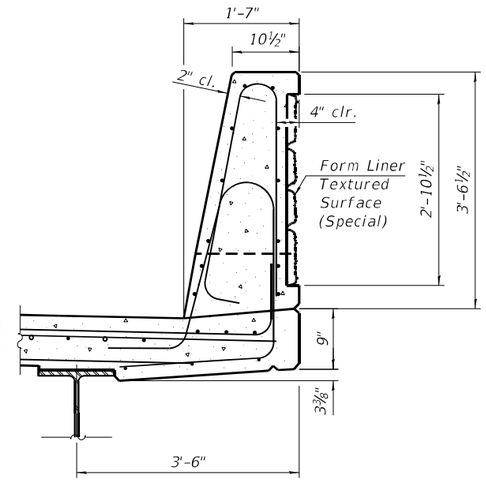

SECTION THRU PARAPET WITH FORMLINER

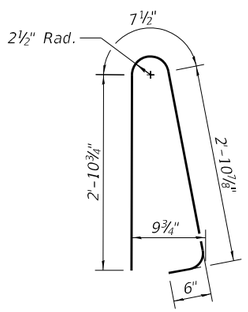

BAR d1(E) & d50(E)

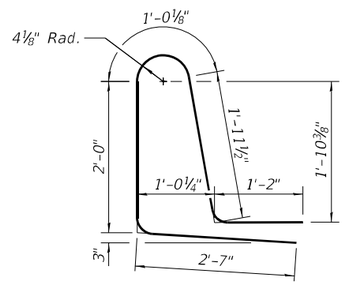

BAR d2(E) & d51(E)

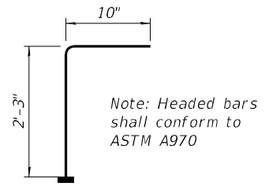

BAR v1(E), v50(E)

(Headed)

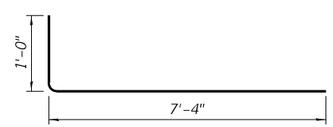

BAR a3(E) & a52(E)

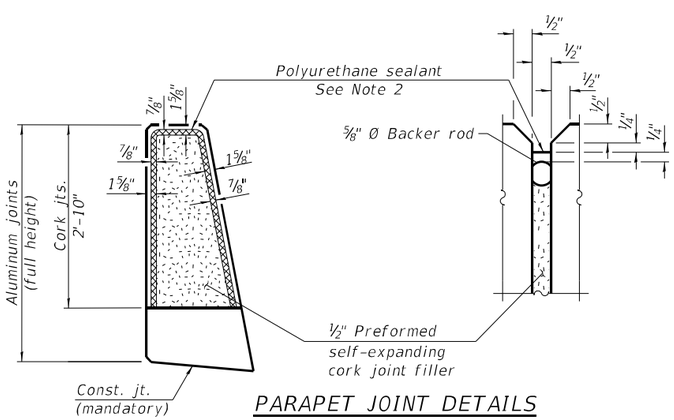

PARAPET JOINT DETAILS

SUPERSTRUCTURE BILL OF MATERIAL

Structure No. 016-0376 (NB)

Bar	No.	Size	Length	Shape
a1(E)	266	#5	26'-10"	
a2(E)	435	#5	27'-3"	
a3(E)	870	#6	8'-4"	
a4(E)	265	#5	32'-9"	
a5(E)	435	#5	33'-3"	
a6(E)	28	#5	36'-11"	
a7(E)	56	#5	26'-1"	
b1(E)	357	#5	31'-8"	
b2(E)	512	#5	28'-2"	
b3(E)	228	#6	37'-5"	
d1(E)	602	#5	7'-0"	
d2(E)	602	#5	8'-9"	
e1(E)	48	#4	18'-6"	
e2(E)	96	#4	12'-8"	
e3(E)	48	#4	11'-3"	
e4(E)	80	#4	17'-1"	
e5(E)	8	#4	30'-6"	
v1(E)	126	#5	3'-1"	
Concrete Superstructures			CU YD	348.3
Protective Coat			SQ YD	1,483
Reinforcement Bars, Epoxy Coated			POUND	110,180
Bar Splicers			EACH	743
Bridge Deck Grooving (Longitudinal)			SQ YD	1,238
Diamond Grinding (Bridge Section)			SQ YD	1,200
Form Liner Textured Surface (Special)			SQ FT	708
Concrete Color Additive			CU YD	32.5
Bar Terminators			EACH	168
Concrete Sealant (Special)			SQ YD	64

Structure No. 016-1121 (SB)

Bar	No.	Size	Length	Shape
a50(E)	266	#5	26'-8"	
a51(E)	477	#5	27'-0"	
a52(E)	958	#6	8'-4"	
a53(E)	266	#5	32'-8"	
a54(E)	478	#5	33'-2"	
a55(E)	28	#5	36'-10"	
a56(E)	56	#5	24'-6"	
b50(E)	357	#5	31'-8"	
b51(E)	512	#5	28'-2"	
b52(E)	114	#6	41'-8"	
d50(E)	602	#5	7'-0"	
d51(E)	602	#5	8'-9"	
e50(E)	64	#4	12'-8"	
e51(E)	96	#4	18'-6"	
e52(E)	64	#4	17'-9"	
e53(E)	16	#4	25'-7"	
e54(E)	24	#4	26'-3"	
v50(E)	126	#5	3'-1"	
Concrete Superstructures			CU YD	377.2
Protective Coat			SQ YD	1,483
Reinforcement Bars, Epoxy Coated			POUND	110,090
Bar Splicers			EACH	743
Bridge Deck Grooving (Longitudinal)			SQ YD	1,238
Diamond Grinding (Bridge Section)			SQ YD	1,200
Form Liner Textured Surface (Special)			SQ FT	708
Concrete Color Additive			CU YD	32.5
Bar Terminators			EACH	168
Concrete Sealant (Special)			SQ YD	64

Bars indicated thus 1 x 2-#4 etc. indicates 1 line of bars with 2 lengths per line.

Notes:

1. The 3/16" aluminum sheet shall be ASTM B 209 alloy 3003-H14 and coated to minimize reaction with wet concrete, Cost included with Concrete Superstructure.
2. The polyurethane sealant shall be according to Article 1050.04 of the Std. Spec. and the color shall be gray.
3. Headed bars shall conform to ASTM A970 with threaed attachment; Class HA; and reinforcement bars conformingto ASTM A706. Cost included with Reinforcement Bars, Epoxy Coated.
4. Reinforcement bars designated (E) shall be epoxy coated.
5. Reinforcement bars shall not pass thru aluminum sheets and cork joint filler.

* Prior to Grinding
** After Grinding

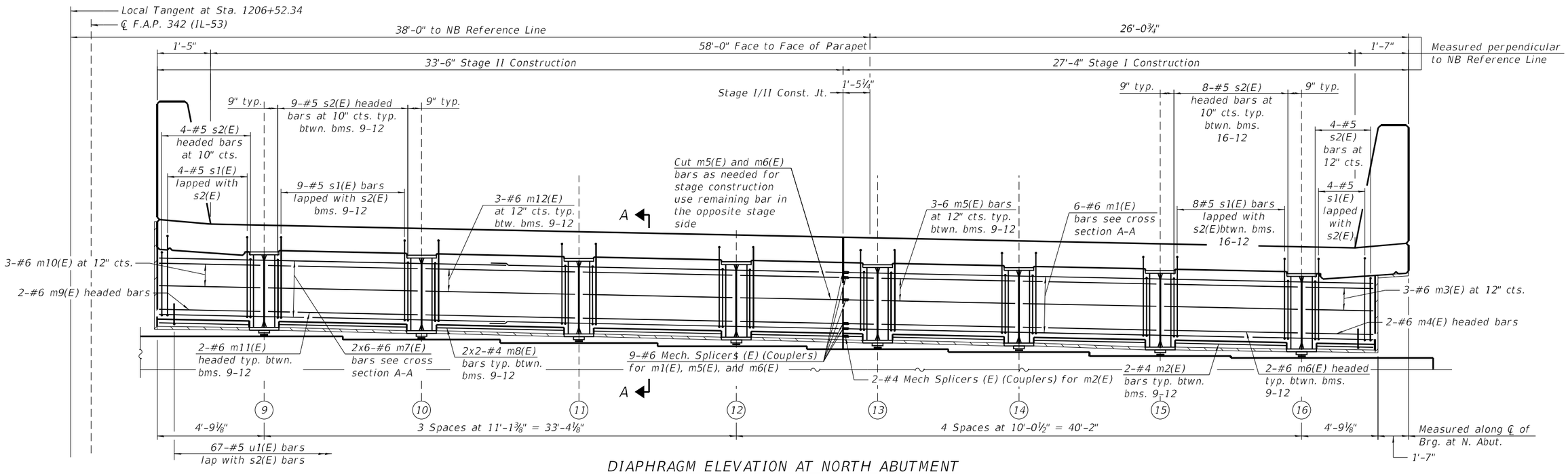

DIAPHRAGM ELEVATION AT NORTH ABUTMENT

(Looking North)

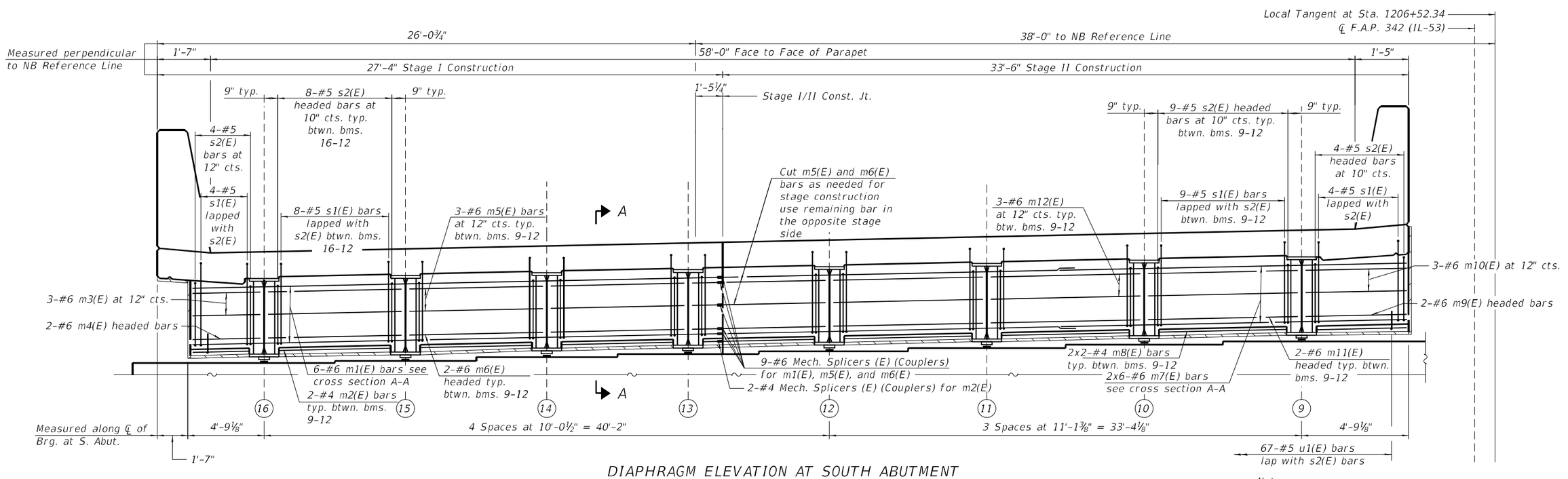

DIAPHRAGM ELEVATION AT SOUTH ABUTMENT

(Looking South)

Notes:

1. See sheet 27 of 66 for Bill of Materials and section A-A.
2. For offset sketch see sheet 2 of 66.

MODEL: Default
FILE NAME: S:\IOL\6300-6399\6346\113\Drawings\CAD\Micro-SS4\CAD_Sheets\0160376112 1-C3-025-SID1-SA1.dgn

9/20/2024 3:11:26 PM

STRAND ASSOCIATES®
1170 SOUTH HOUBOLT ROAD
JOLIET, ILLINOIS 60431
(815) 744-4200
IDFPR NO. 184-001273

USER NAME = codyh	DESIGNED - TJE	REVISED -	
	CHECKED - NDR	REVISED -	
PLOT SCALE = 0:2.0000 ':" / in.	DRAWN - CJH	REVISED -	
PLOT DATE = 9/20/2024	CHECKED - TJE	REVISED -	

STATE OF ILLINOIS
DEPARTMENT OF TRANSPORTATION

SEMI-INTEGRAL DIAPHRAGM (1 OF 2)
STRUCTURE NO. 016-0376 (NB)

SHEET 25 OF 66 SHEETS

F.A.P. RTE.	SECTION	COUNTY	TOTAL SHEETS	SHEET NO.
342	(531) BR 23	COOK	1211	710
		CONTRACT NO. 62W38		
		ILLINOIS	FED. AID PROJECT	

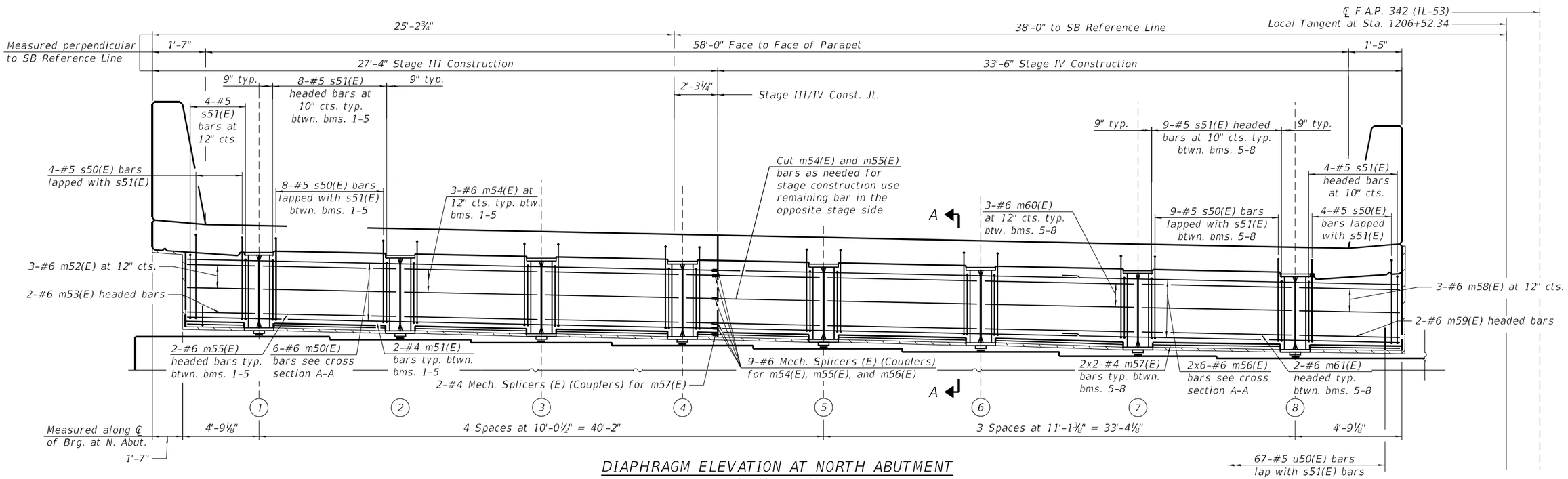

DIAPHRAGM ELEVATION AT NORTH ABUTMENT

(Looking North)

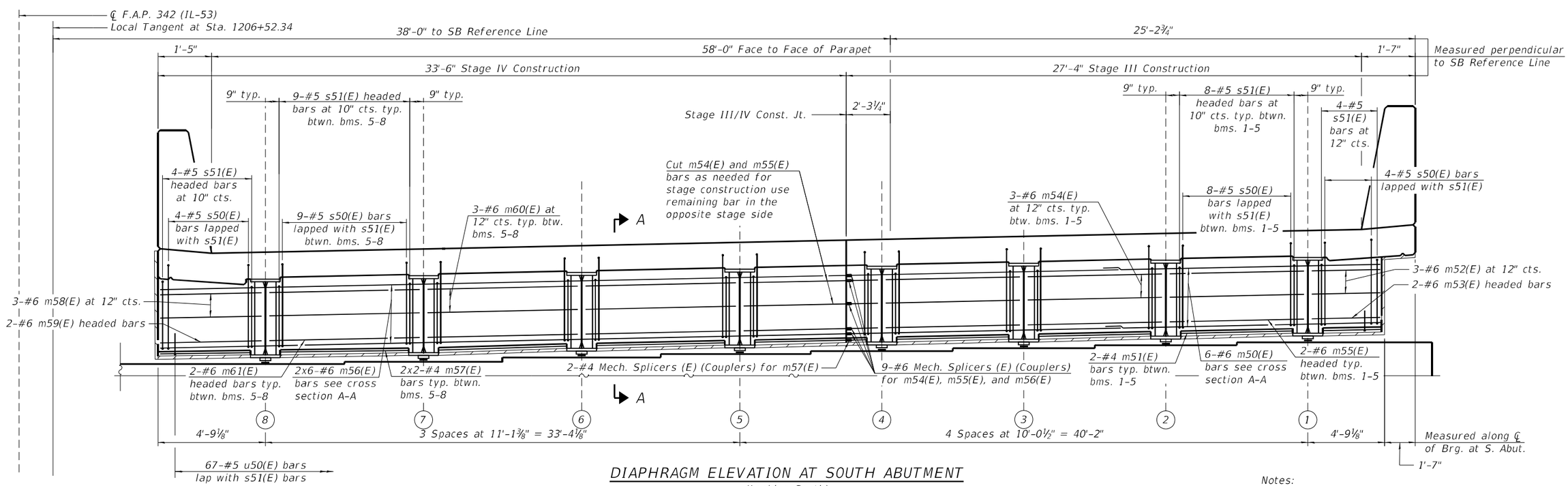

DIAPHRAGM ELEVATION AT SOUTH ABUTMENT

(Looking South)

Notes:
1. See sheet 27 of 66 for Bill of Materials and Section A-A.
2. For offset sketch see sheet 2 of 66.

MODEL: Default
FILE NAME: S:\IOL\6300-6399\6246\113\Drawings\CAD\Micro-SS4\CAD_Sheets\0160376112 1-C3-026-SID2-SAI.dgn

STRAND ASSOCIATES
1170 SOUTH HOUBOLT ROAD
JOLIET, ILLINOIS 60431
(815) 744-4200
IDFPR NO. 184-001273

USER NAME = codyh	DESIGNED - TJE	REVISED -	
	CHECKED - NDR	REVISED -	
PLOT SCALE = 0:2.0000 ':" / in.	DRAWN - CJH	REVISED -	
PLOT DATE = 9/20/2024	CHECKED - TJE	REVISED -	

STATE OF ILLINOIS
DEPARTMENT OF TRANSPORTATION

SEMI-INTEGRAL DIAPHRAGM (2 OF 2)
STRUCTURE NO. 016-1121 (SB)

SHEET 26 OF 66 SHEETS

F.A.P. RTE.	SECTION	COUNTY	TOTAL SHEETS	SHEET NO.
342	(531) BR 23	COOK	1211	711
		CONTRACT NO. 62W38		
		ILLINOIS	FED. AID PROJECT	

9/20/2024 3:11:27 PM

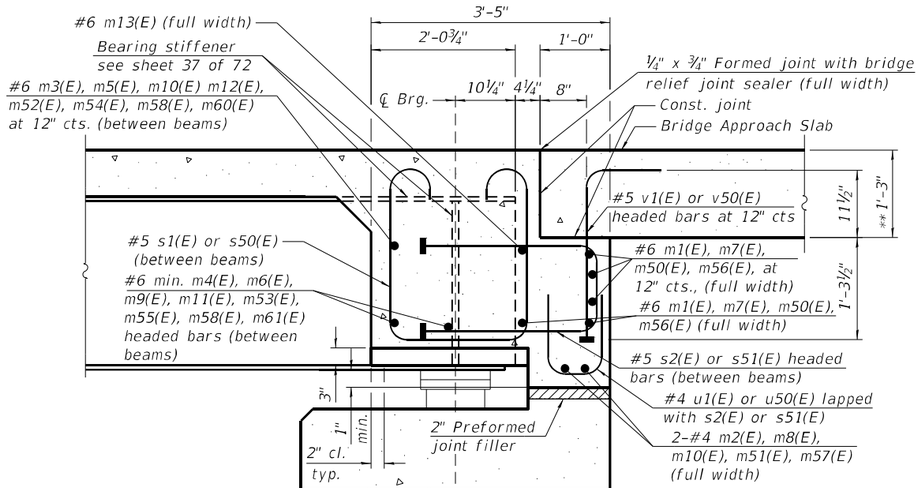

SECTION A-A

(Horiz. dim. at Rt. <'s to Bk. of Abut.)

Notes:

Headed bars shall conform to ASTM A970 with threaded attachment; Class HA; and reinforcement bars conforming to ASTM A706. Cost included with Reinforcement Bars, Epoxy Coated.

The s1(E), s2(E), s50(E), s51(E), u1(E), u50(E), v1(E), and v50(E) bars are placed parallel to beams and spaced at right angles to beams.

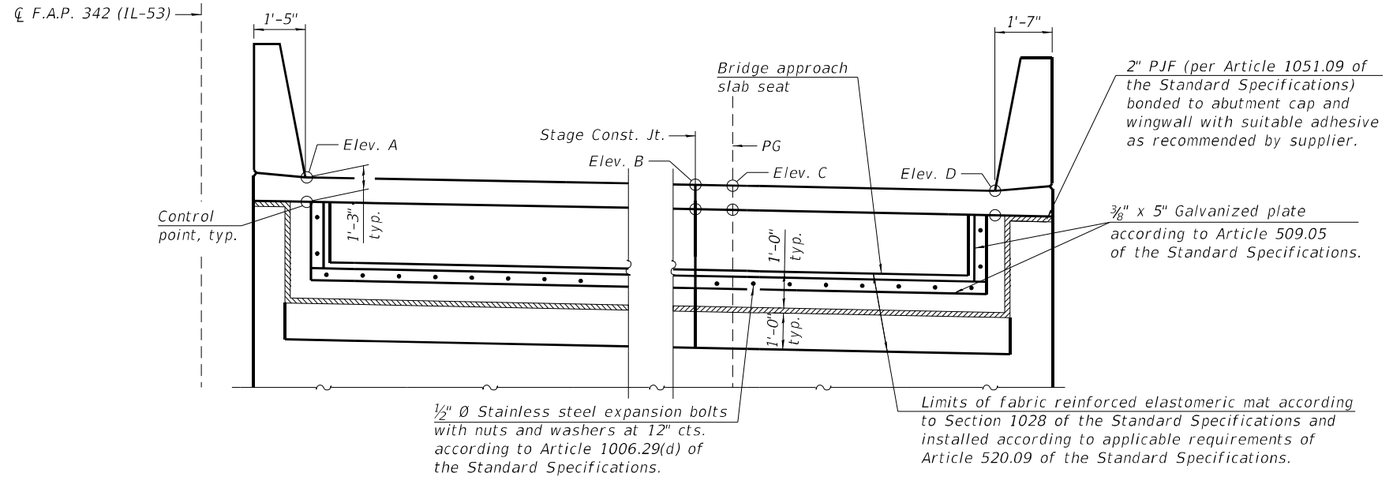

ELEVATION

(Looking at back of abutment)

BACK OF ABUTMENT ELEVATIONS

Elev.	S.N. 016-1121		S.N. 016-0376	
	S. Abut	N. Abut	S. Abut	N. Abut
A	751.72	751.06	751.92	751.44
B	751.13	750.72	751.15	750.99
C	751.17	750.73	751.07	750.97
D	750.39	750.29	750.49	750.61

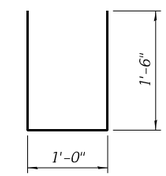

BAR u1(E), u50(E)

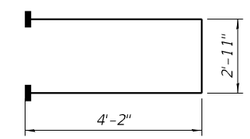

BAR s2(E), s51(E)

(Headed)

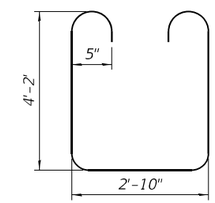

BAR s1(E), s50(E)

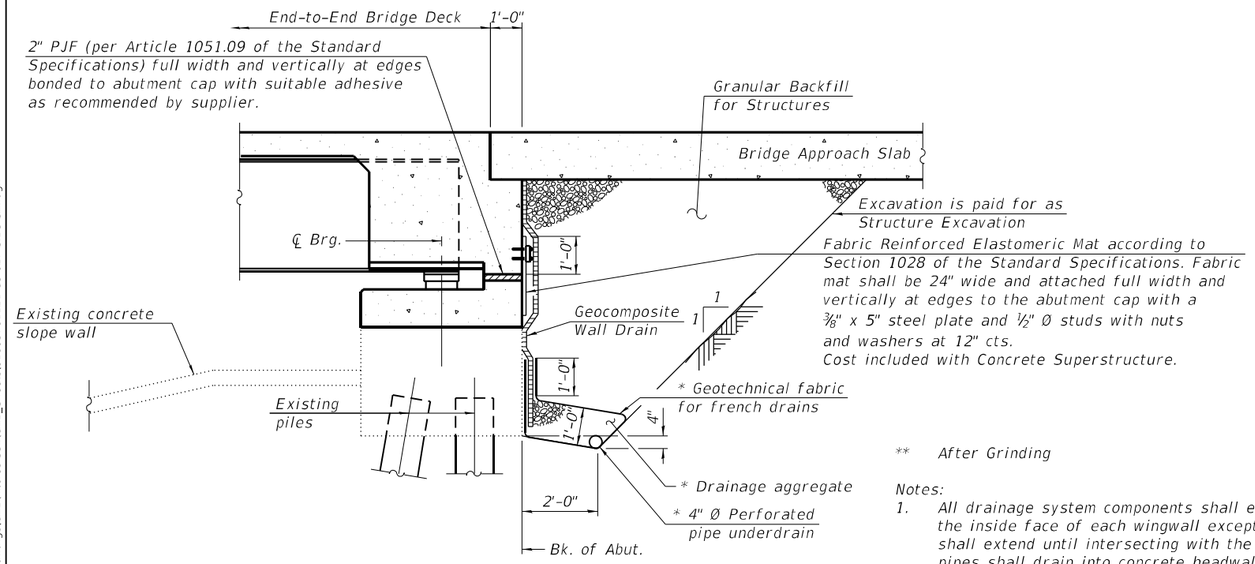

SECTION THRU SEMI-INTEGRAL ABUTMENT

(Horiz. dim. at Rt. L's to Bk. of Abut.)

*Included in the cost of Pipe Underdrains for Structures.

** After Grinding

Notes:

1. All drainage system components shall extend to 2'-0" from the inside face of each wingwall except an outlet pipe shall extend until intersecting with the side slopes. The pipes shall drain into concrete headwalls. (See Article 601.05 of the Standard Specifications and Highway Standard 601101).
2. The approach slab ledge shall have a constant slope determined from the control points shown.
3. Cost of fabric reinforced elastomeric mat, galvanized plate, stainless steel expansion bolts with nuts and washers and installation are included in the cost of Concrete Superstructure.

SEMI-INTEGRAL DIAPHRAGM BILL OF MATERIAL

Structure No. 016-0376 (NB)

Bar	No.	Size	Length	Shape
m1(E)	12	#6	33'-6"	
m2(E)	4	#4	33'-6"	
m3(E)	6	#6	2'-10"	
m4(E)	4	#6	2'-10"	
m5(E)	24	#6	9'-8"	
m6(E)	16	#6	9'-8"	
m7(E)	24	#6	26'-0"	
m8(E)	8	#4	23'-7"	
m9(E)	6	#6	4'-8"	
m10(E)	4	#6	4'-8"	
m11(E)	12	#6	10'-10"	
m12(E)	18	#6	10'-10"	
s1(E)	134	#5	12'-0"	
s2(E)	134	#5	11'-3"	
u1(E)	134	#5	4'-0"	
Concrete Superstructures			CU YD	55.6
Reinforcement Bars, Epoxy Coated			POUND	6,750
Mechanical Splicers			EACH	22
Bar Terminators			EACH	268
Geocomposite Wall Drain			SQ YD	218
Structure Excavation			CU YD	242
Granular Backfill for Structures			CU YD	2,518
Pipe UnderDrains for Structures 4"			FOOT	218

Structure No. 016-1121 (SB)

Bar	No.	Size	Length	Shape
m50(E)	12	#6	32'-6"	
m51(E)	4	#4	32'-6"	
m52(E)	6	#6	3'-4"	
m53(E)	4	#6	3'-4"	
m54(E)	24	#6	9'-8"	
m55(E)	16	#6	9'-8"	
m56(E)	24	#6	26'-7"	
m57(E)	8	#4	25'-5"	
m58(E)	6	#6	4'-6"	
m59(E)	4	#6	4'-6"	
m60(E)	18	#6	10'-9"	
m61(E)	12	#6	10'-9"	
s50(E)	134	#5	10'-8"	
s51(E)	134	#5	11'-3"	
u50(E)	134	#5	4'-0"	
Concrete Superstructures			CU YD	55.6
Reinforcement Bars, Epoxy Coated			POUND	6,570
Mechanical Splicers			EACH	22
Bar Terminators			EACH	268
Geocomposite Wall Drain			SQ YD	213
Structure Excavation			CU YD	211
Granular Backfill for Structures			CU YD	2,504
Pipe UnderDrains for Structures 4"			FOOT	213

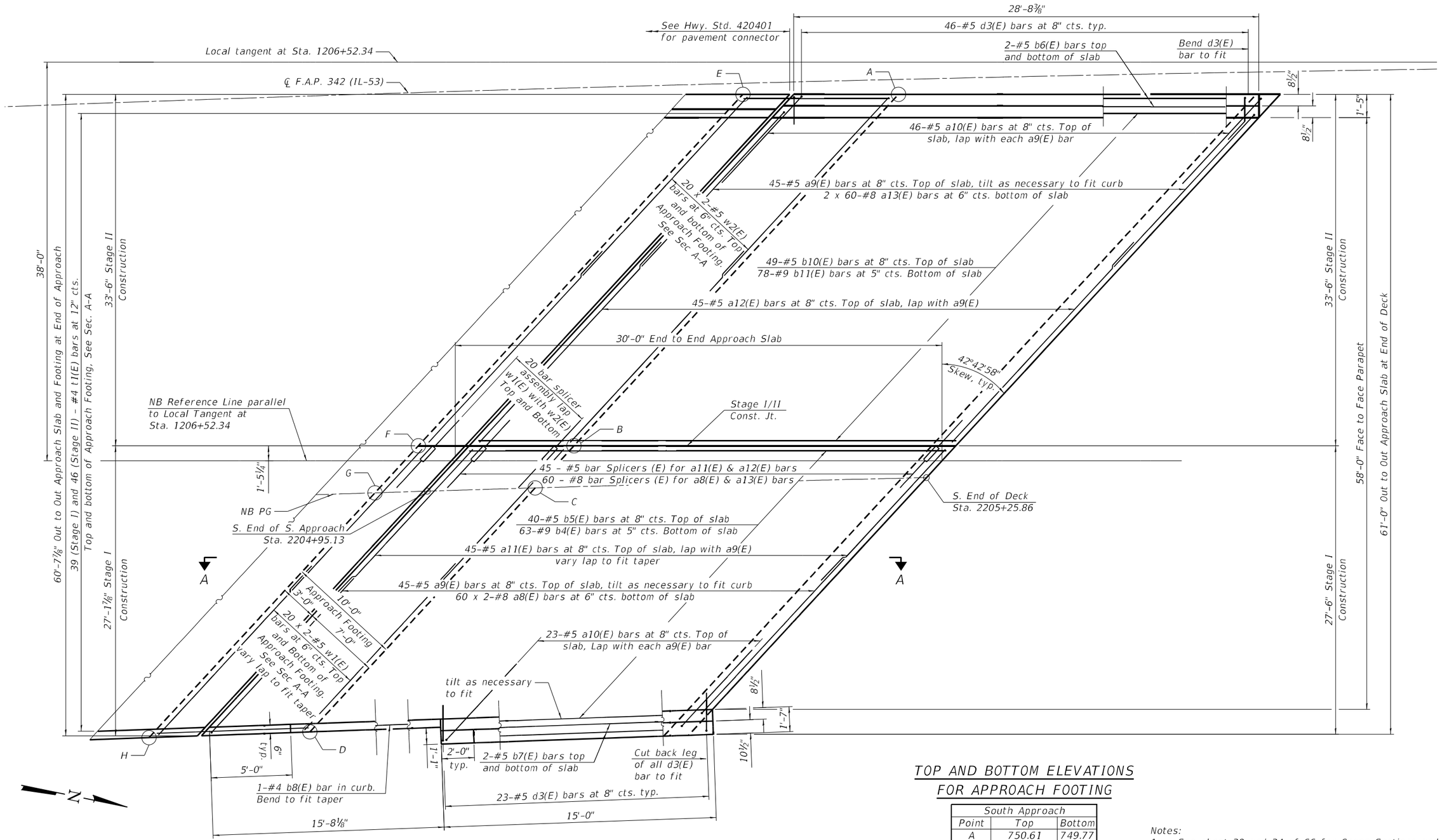

PLAN
(South Approach Slab)

TOP AND BOTTOM ELEVATIONS FOR APPROACH FOOTING

South Approach		
Point	Top	Bottom
A	750.61	749.77
B	749.77	748.94
C	749.68	748.85
D	749.09	748.26
E	750.54	749.71
F	749.69	748.86
G	749.60	748.76
H	749.01	748.17

MINIMUM BAR LAP

#5 Bar = 3'-0"
#8 Bar = 4'-9"

Notes:
1. See sheet 30 and 34 of 66 for Cross Sections and details.
2. See Sheet 34 of 66 for Section A-A.
3. Bars indicated thus 20 x 2-#5 indicates 20 lines of bars with 2 lengths per line.
4. Approach slabs shall not be poured when the temperature at any point falls below 45° in a 24 hour period. Care shall be taken so that the temperature differential between the air and concrete shall not exceed 35° in a 24 hour period.

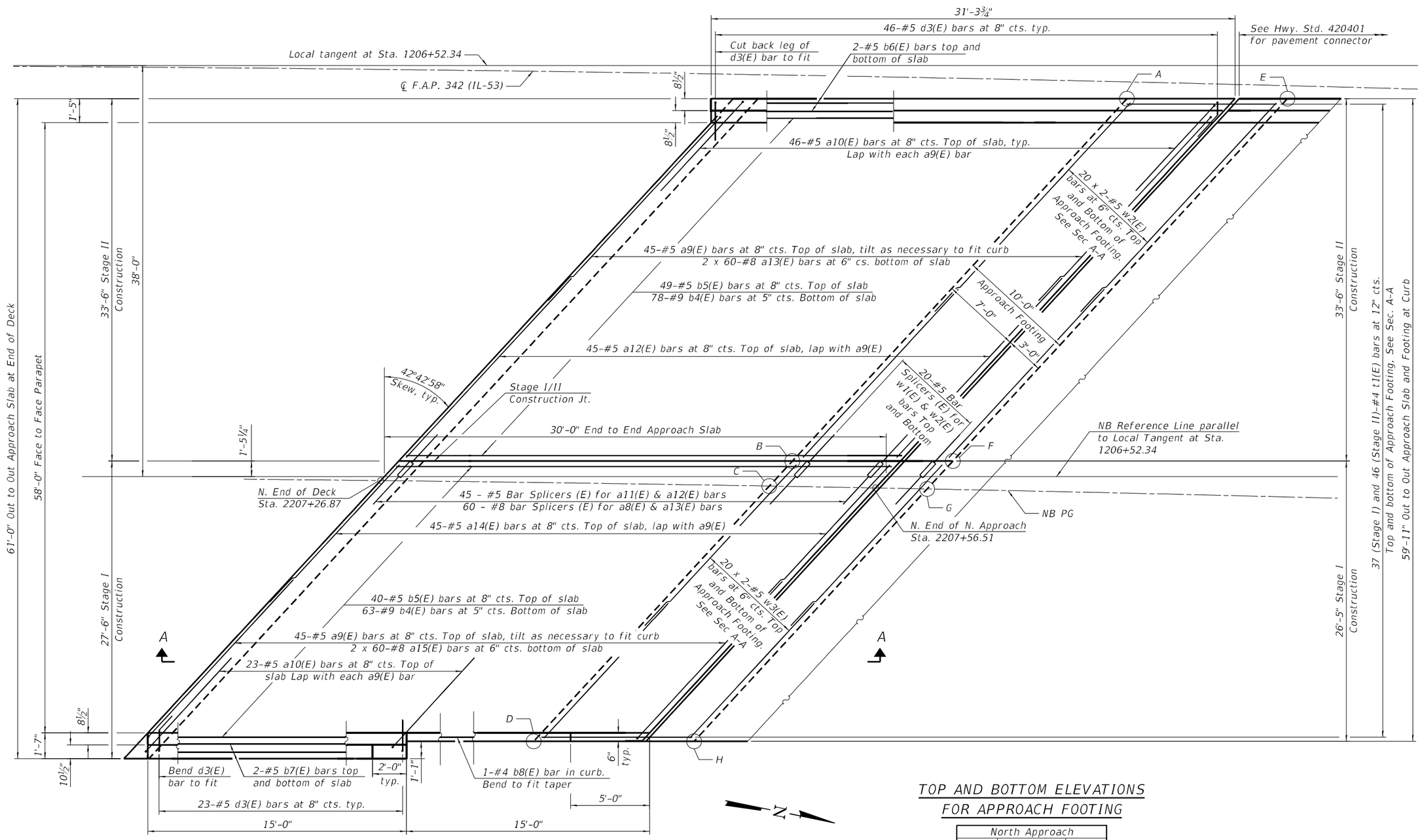

PLAN
(North Approach Slab)

TOP AND BOTTOM ELEVATIONS FOR APPROACH FOOTING

North Approach		
Point	Top	Bottom
A	750.06	749.22
B	749.59	748.76
C	749.56	748.73
D	749.22	748.39
E	749.97	749.13
F	749.50	748.67
G	749.47	748.64
H	749.13	748.30

MINIMUM BAR LAP

#5 Bar = 3'-0"
#8 Bar = 4'-9"

Notes:
1. See sheet 30 and 34 of 66 for Cross Sections and details.
2. See Sheet 34 of 66 for Section A-A.
3. Bars indicated thus 20 x 2-#5 indicates 20 lines of bars with 2 lengths per line.
4. Approach slabs shall not be poured when the temperature at any point falls below 45° in a 24 hour period. Care shall be taken so that the temperature differential between the air and concrete shall not exceed 35° in a 24 hour period.

MODEL: Default
FILE NAME: S:\IDL\6300-63996346\113\Drawings\CAD\Micros-SSA\CAD_Sheets\0160376112-C3-029-ASP2-SAL.dgn

STRAND ASSOCIATES®
1170 SOUTH HOUBOLT ROAD
JOLIET, ILLINOIS 60431
(815) 744-4200
IDFPR NO. 184-001273

USER NAME = codyh	DESIGNED - TJE	REVISED -	
	CHECKED - NDR	REVISED -	
PLOT SCALE = 0:2.0000 ':" / in.	DRAWN - CJH	REVISED -	
PLOT DATE = 9/20/2024	CHECKED - TJE	REVISED -	

STATE OF ILLINOIS
DEPARTMENT OF TRANSPORTATION

NORTH APPROACH SLAB PLAN (2 OF 2)
STRUCTURE NO. 016-0376 (NB)

SHEET 29 OF 66 SHEETS

F.A.P. RTE.	SECTION	COUNTY	TOTAL SHEETS	SHEET NO.
342	(531) BR 23	COOK	1211	714
		CONTRACT NO. 62W38		
	ILLINOIS	FED. AID PROJECT		

9/20/2024 3:11:42 PM

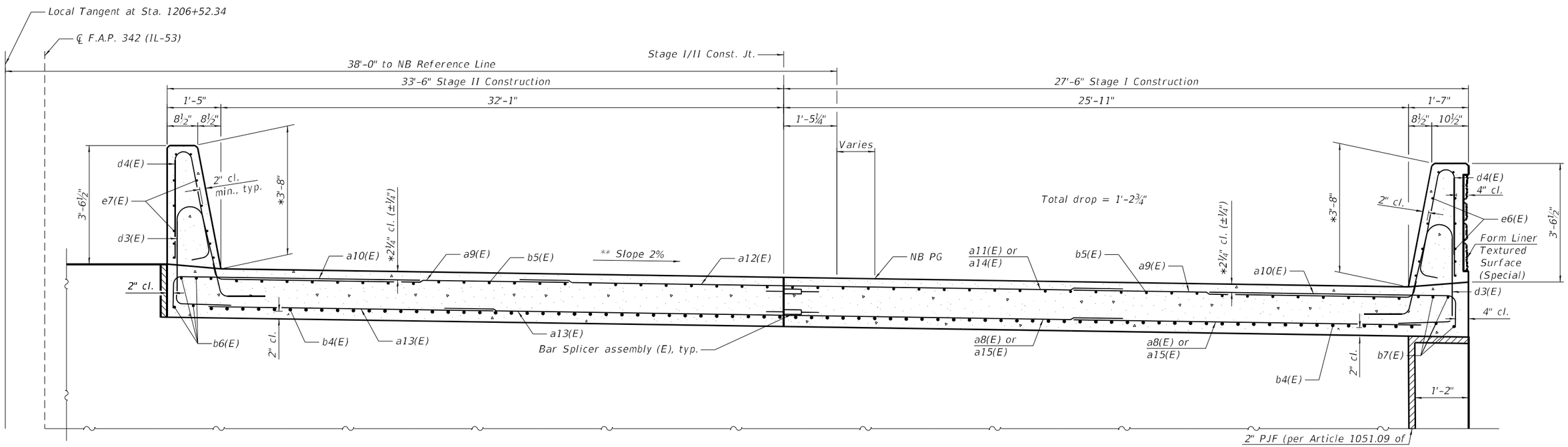

CROSS SECTION NEAR ABUTMENT

(Looking North)

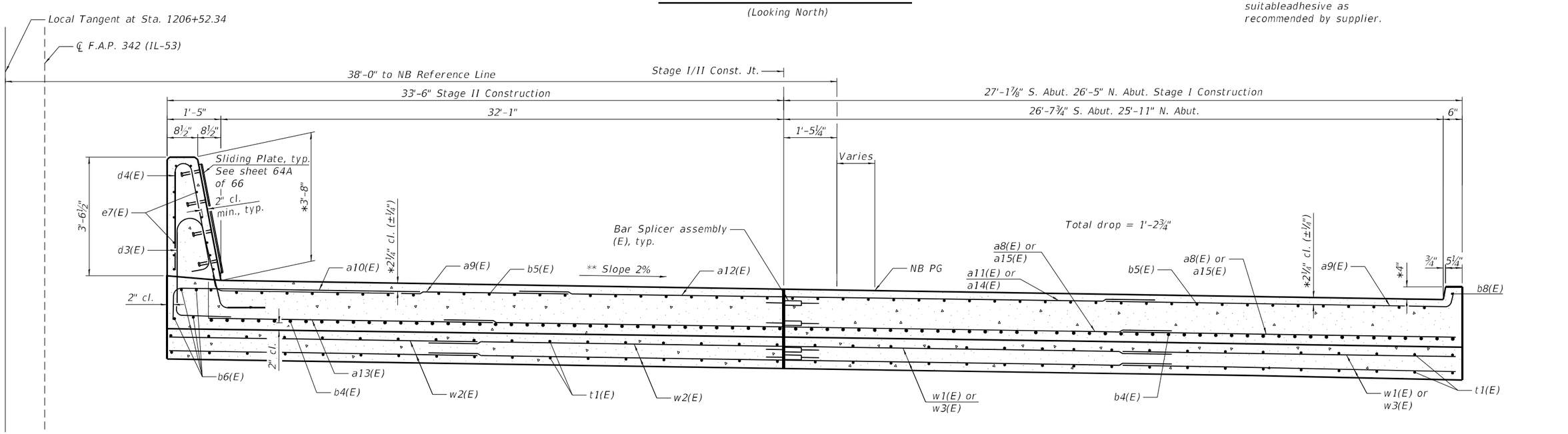

CROSS SECTION AT APPROACH FOOTING

(Looking North)

Notes:
1. See sheet 34 of 66 for details and bill of materials.

* after grinding
** Measured Radially

MODEL: Default
FILE NAME: S:\OL\6300-6399\6346\113\Drawings\CAD\Micros-SS4\CAD_Sheets\01603761121-C3-030-4SCS-SA1.dgn

STRAND ASSOCIATES
1170 SOUTH HOUBOLT ROAD
JOLIET, ILLINOIS 60431
(815) 744-4200
IDFPR NO. 184-001273

USER NAME = codyh	DESIGNED - TJE	REVISED -	
	CHECKED - NDR	REVISED -	
PLOT SCALE = 0:2.0000 ':" / in.	DRAWN - CJH	REVISED -	
PLOT DATE = 9/20/2024	CHECKED - TJE	REVISED -	

STATE OF ILLINOIS
DEPARTMENT OF TRANSPORTATION

APPROACH SLAB CROSS SECTION
STRUCTURE NO. 016-0376 (NB)

SHEET 30 OF 66 SHEETS

F.A.P. RTE.	SECTION	COUNTY	TOTAL SHEETS	SHEET NO.
342	(531) BR 23	COOK	1211	715
		CONTRACT NO. 62W38		
	ILLINOIS	FED. AID PROJECT		

9/20/2024 3:11:44 PM

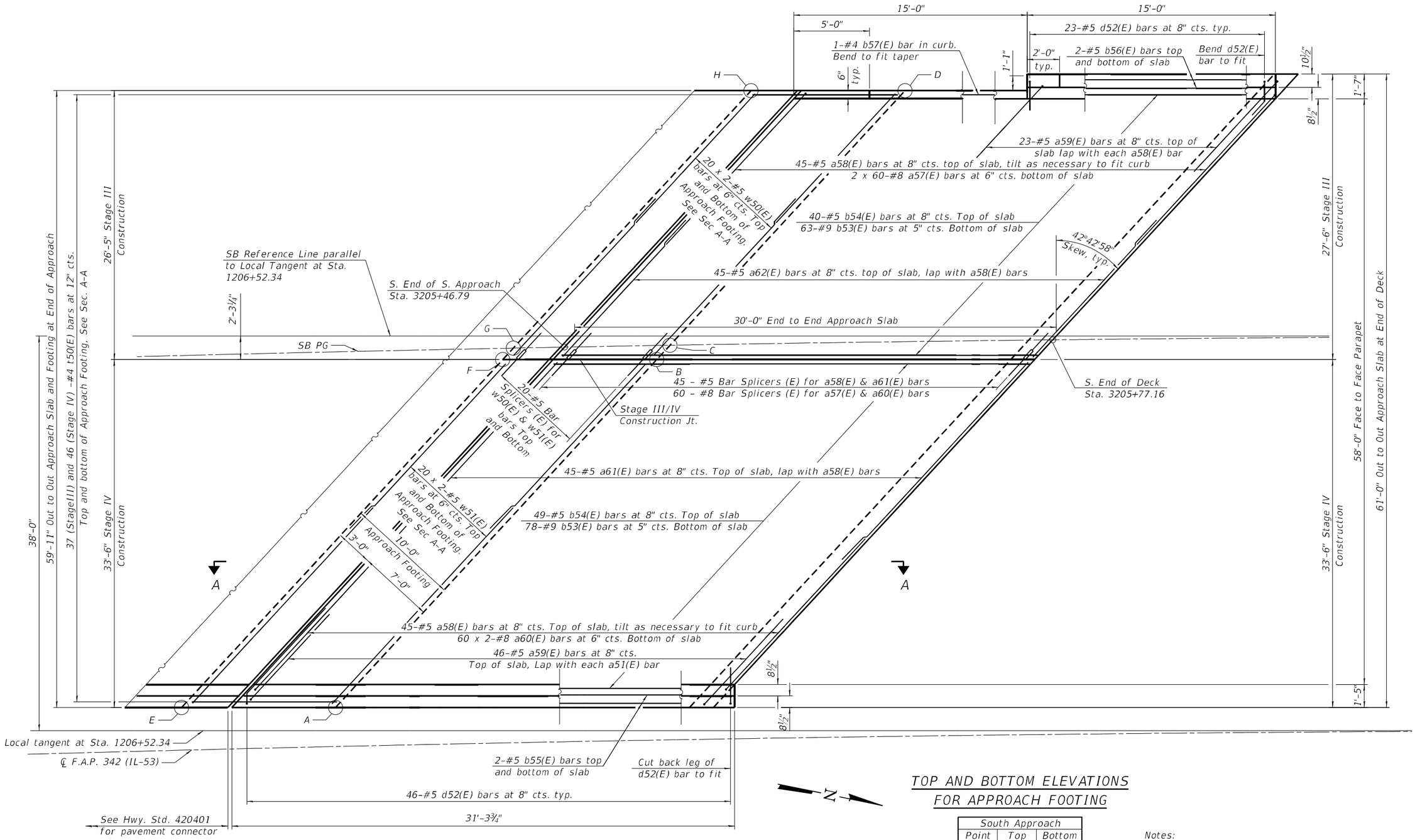

PLAN

(South Approach Slab)

TOP AND BOTTOM ELEVATIONS FOR APPROACH FOOTING

South Approach		
Point	Top	Bottom
A	749.02	748.19
B	749.79	748.96
C	749.83	749.00
D	750.40	749.57
E	748.98	748.15
F	749.75	748.92
G	749.78	748.95
H	750.36	749.53

Notes:

1. See sheet 33 and 34 of 66 for Cross Sections and details.
2. See Sheet 34 of 66 for Section A-A.
3. Bars indicated thus 20 x 2-#5 indicates 20 lines of bars with 2 lengths per line.
4. Approach slabs shall not be poured when the temperature at any point falls below 45° in a 24 hour period. Care shall be taken so that the temperature differential between the air and concrete shall not exceed 35° in a 24 hour period.

MINIMUM BAR LAP

#5 Bar = 3'-0"
#8 Bar = 4'-9"

STRAND ASSOCIATES
1170 SOUTH HOUBOLT ROAD
JOLIET, ILLINOIS 60431
(815) 744-4200
IDFPR NO. 184-001273

USER NAME = codyh	DESIGNED - TJE	REVISED -	
	CHECKED - NDR	REVISED -	
PLOT SCALE = 0:2.0000 ':" / in.	DRAWN - CJH	REVISED -	
PLOT DATE = 9/20/2024	CHECKED - TJE	REVISED -	

STATE OF ILLINOIS
DEPARTMENT OF TRANSPORTATION

SOUTH APPROACH SLAB PLAN (1 OF 2)
STRUCTURE NO. 016-1121 (SB)

SHEET 31 OF 66 SHEETS

F.A.P. RTE.	SECTION	COUNTY	TOTAL SHEETS	SHEET NO.
342	(531) BR 23	COOK	1211	716
		CONTRACT NO. 62W38		
	ILLINOIS	FED. AID PROJECT		

MODEL: Default
FILE NAME: S:\IOL6300-6399\6346113\Drawings\CAD\Micro-SSA\CAD_Sheets\0160376112 1-C3-031-ASP1-SAL.dgn
9/20/2024 3:11:45 PM

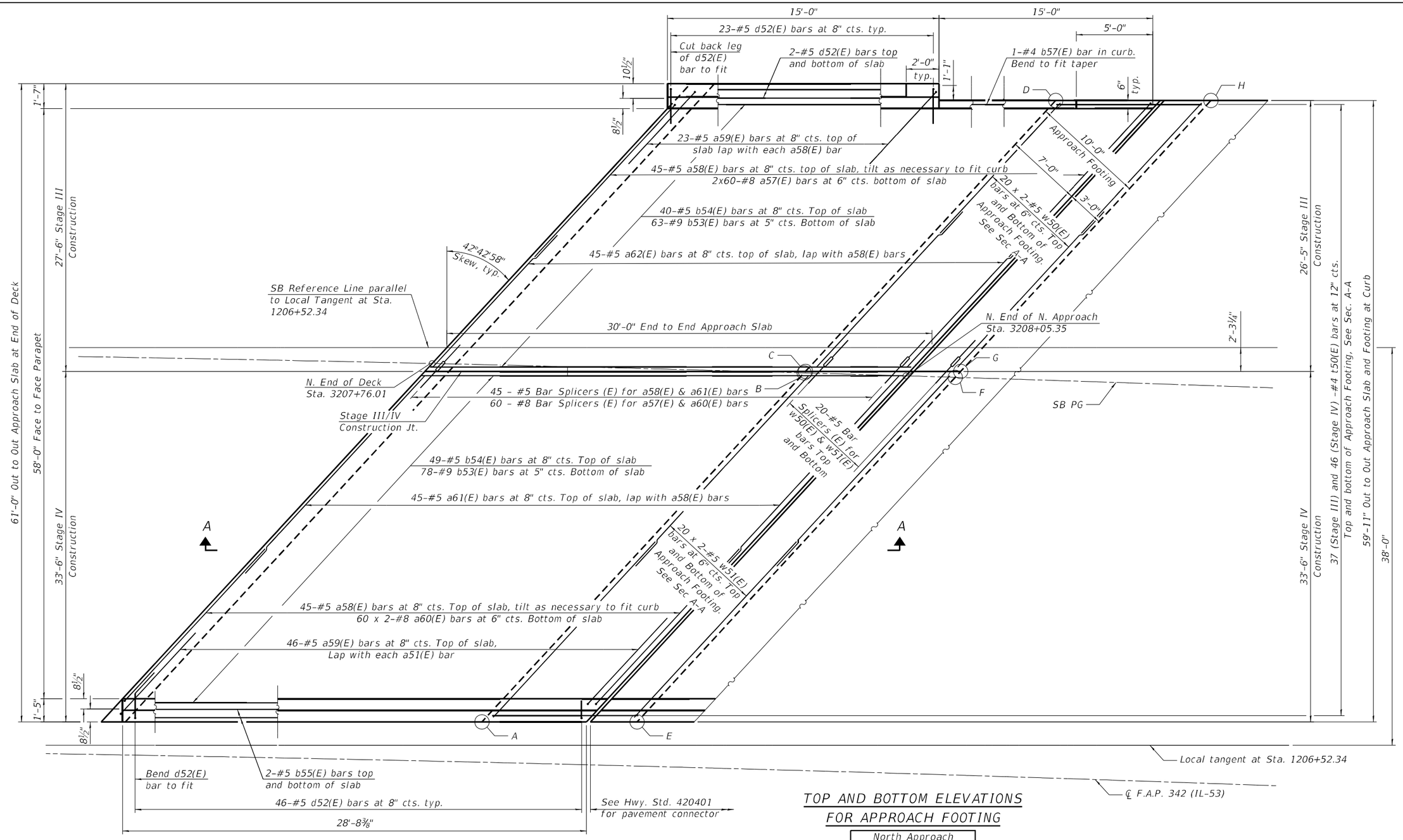

PLAN
(North Approach Slab)

TOP AND BOTTOM ELEVATIONS FOR APPROACH FOOTING

North Approach		
Point	Top	Bottom
A	748.86	748.03
B	749.31	748.47
C	749.31	748.48
D	749.66	748.83
E	748.76	747.92
F	749.20	748.37
G	749.20	748.37
H	749.56	748.73

Notes:
1. See sheet 33 and 34 of 66 for Cross Sections and details.
2. See Sheet 34 of 66 for Section A-A.
3. Bars indicated thus 20 x 2-#5 indicates 20 lines of bars with 2 lengths per line.
4. Approach slabs shall not be poured when the temperature at any point falls below 45° in a 24 hour period. Care shall be taken so that the temperature differential between the air and concrete shall not exceed 35° in a 24 hour period.

MINIMUM BAR LAP

#5 Bar = 3'-0"
#8 Bar = 4'-9"

STRAND ASSOCIATES
1170 SOUTH HOUBOLT ROAD
JOLIET, ILLINOIS 60431
(815) 744-4200
IDFPR NO. 184-001273

USER NAME = codyh	DESIGNED - TJE	REVISED -	
	CHECKED - NDR	REVISED -	
PLOT SCALE = 0:2.0000 ':" / in.	DRAWN - CJH	REVISED -	
PLOT DATE = 9/20/2024	CHECKED - TJE	REVISED -	

STATE OF ILLINOIS
DEPARTMENT OF TRANSPORTATION

NORTH APPROACH SLAB PLAN (2 OF 2)
STRUCTURE NO. 016-1121 (SB)

SHEET 32 OF 66 SHEETS

F.A.P. RTE.	SECTION	COUNTY	TOTAL SHEETS	SHEET NO.
342	(531) BR 23	COOK	1211	717
		CONTRACT NO. 62W38		
	ILLINOIS	FED. AID PROJECT		

MODEL: Default
FILE NAME: S:\IDOL\6300-6399\6246\113\Drawings\CAD\Micros-SS4\CAD_Sheets\0160376112 1-C3-032-ASP2-S4.dgn
9/20/2024 3:11:46 PM

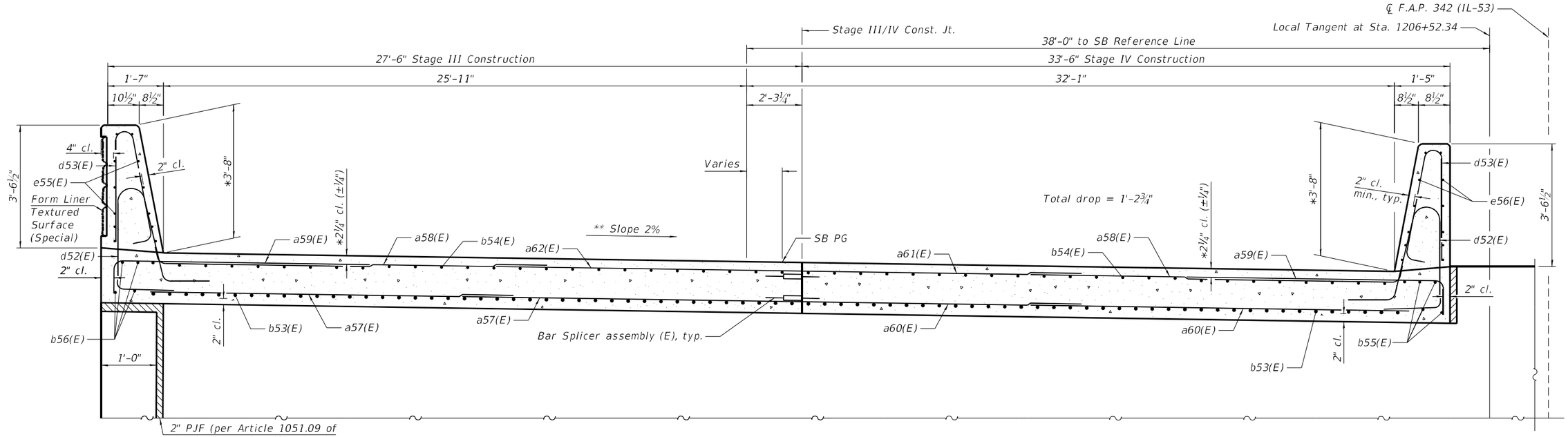

CROSS SECTION NEAR ABUTMENT

(Looking North)

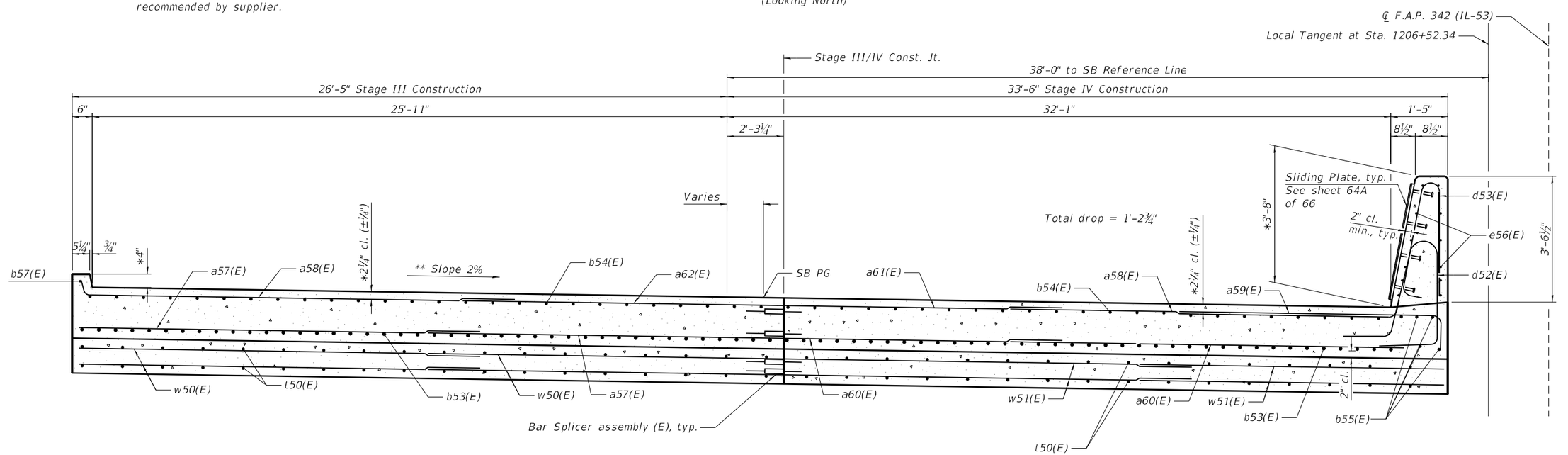

CROSS SECTION AT APPROACH FOOTING

(Looking North)

Notes:
1. See sheet 34 of 66 for details and bill of materials.

* after grinding
** Measured Radially

MODEL: Default
FILE NAME: S:\IOL\6300--6399\6346\113\Drawings\CAD\Micro-Sta\CAD_Sheets\0160376112 1-C3-033-ASCS-SAI.dgn
9/20/2024 3:11:47 PM

STRAND ASSOCIATES®
1170 SOUTH HOUBOLT ROAD
JOLIET, ILLINOIS 60431
(815) 744-4200
IDFPR NO. 184-001273

USER NAME = codyh	DESIGNED - TJE	REVISED -	
	CHECKED - NDR	REVISED -	
PLOT SCALE = 0:2.0000 ':" / in.	DRAWN - CJH	REVISED -	
PLOT DATE = 9/20/2024	CHECKED - TJE	REVISED -	

STATE OF ILLINOIS
DEPARTMENT OF TRANSPORTATION

APPROACH SLAB CROSS SECTION
STRUCTURE NO. 016-1121 (SB)

SHEET 33 OF 66 SHEETS

F.A.P. RTE.	SECTION	COUNTY	TOTAL SHEETS	SHEET NO.
342	(531) BR 23	COOK	1211	718
		CONTRACT NO. 62W38		
	ILLINOIS	FED. AID PROJECT		

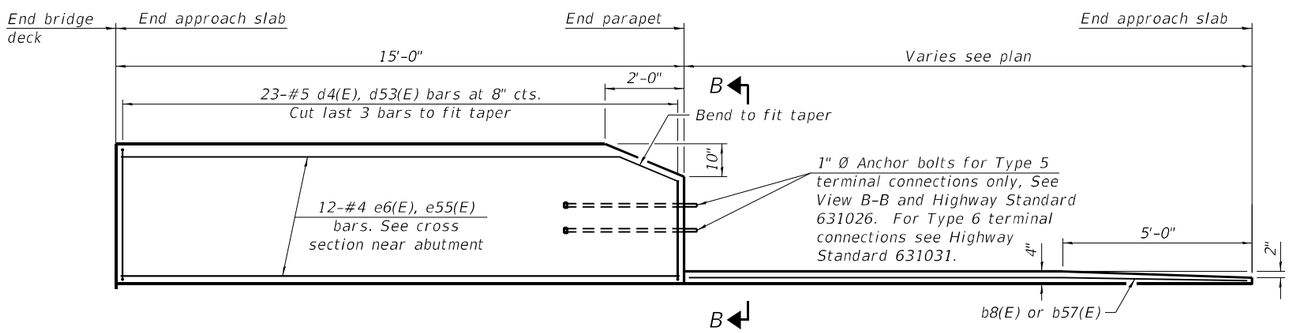

SN016-0376 EAST & SN016-1121 WEST INSIDE ELEVATION OF PARAPET AND CURB

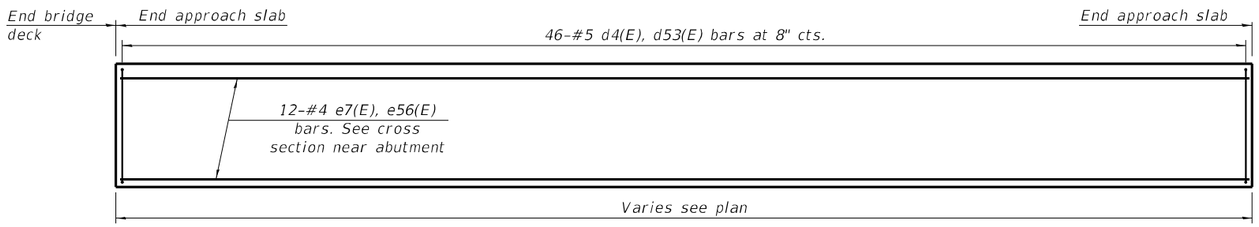

SN016-0376 WEST & SN016-1121 EAST INSIDE ELEVATION OF PARAPET

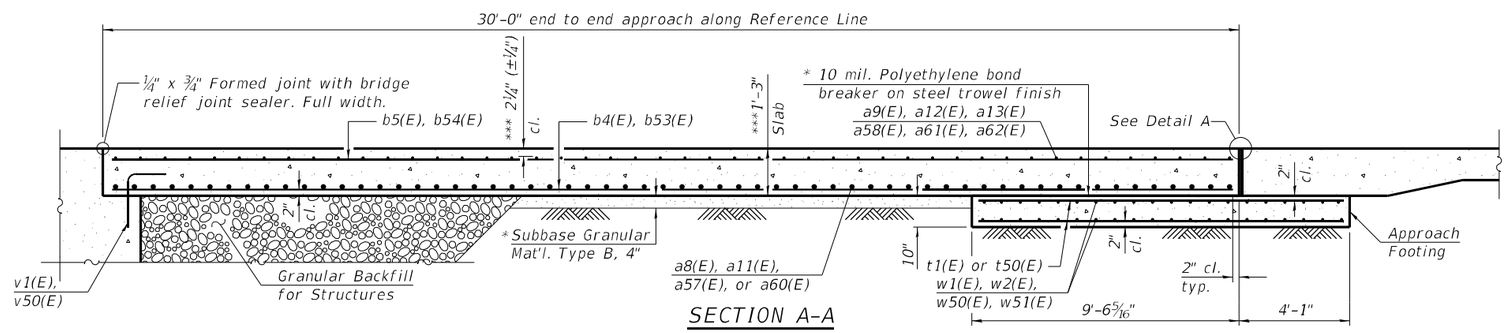

SECTION A-A

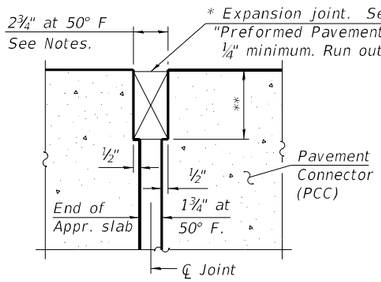

DETAIL A

(at Rt. ∠'s)

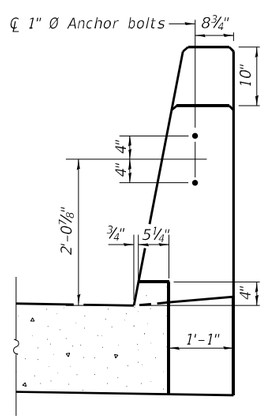

VIEW B-B

* Cost included with Concrete Superstructure (Approach Slab).
** Per manufacturer recommendations
*** After grinding

Notes:

1. The joint opening shall be adjusted for temperature per Article 520.04 of the Standard Specifications. However, since this detail is for jointless structures, the length of bridge used to calculate the adjustment shall be equal to half the total bridge length plus the length of the bridge approach slab.
2. Parapet concrete shall be paid for as Concrete Superstructure.
3. Approach slab shall be paid for as Concrete Superstructure (Approach Slab).
4. Approach footing concrete shall be paid for as Concrete Structures.
5. The approach footing maximum applied service bearing pressure (Qmax) = 2.0 ksf.
6. Cost of excavation for approach footing included with Concrete Structures.
7. For Granular Backfill for Structures and drainage treatment details, see sheet 27 of 66.

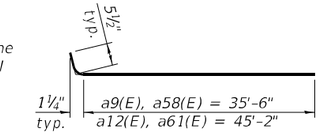

BAR a9(E), a12(E), a58(E), a61(E)

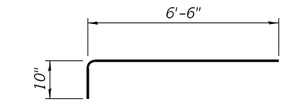

BAR a10(E), a59(E)

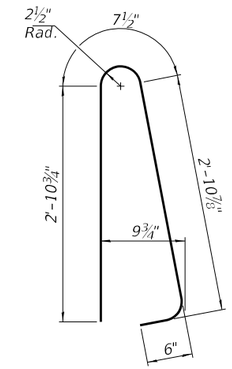

BAR d4(E), d53(E)

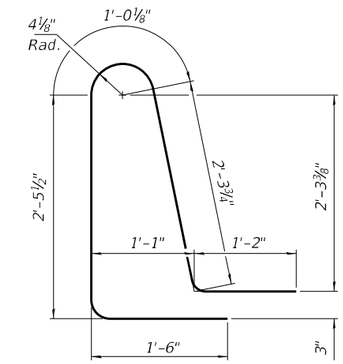

BAR d3(E), d52(E)

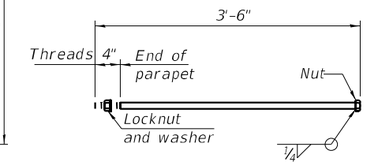

*1" Ø ANCHOR BOLT

(Anchor bolt assemblies shall be galvanized according to Article 1006.09 of the Standard Specifications)

TWO APPROACHES BILL OF MATERIAL

Structure No. 016-0376 (NB)

Bar	No.	Size	Length	Shape
a8(E)	240	#8	19'-2"	
a9(E)	180	#5	20'-6"	
a10(E)	138	#5	7'-4"	
a11(E)	240	#8	23'-5"	
a12(E)	90	#5	26'-9"	
b4(E)	285	#9	29'-8"	
b5(E)	180	#8	29'-8"	
b6(E)	8	#5	14'-8"	
b7(E)	8	#5	28'-4"	
b8(E)	2	#5	15'-1"	
d3(E)	138	#5	8'-6"	
d4(E)	138	#5	6'-5"	
e6(E)	24	#4	14'-8"	
e7(E)	24	#4	28'-4"	
t1(E)	334	#4	13'-1"	
w1(E)	80	#5	20'-3"	
w2(E)	160	#5	24'-1"	
w3(E)	80	#5	18'-11"	
Concrete Structures			CU YD	75.5
Concrete Superstructures			CU YD	8.7
Concrete Superstructure (Approach Slab)			CU YD	169.2
Protective Coat			SQ YD	428
Reinforcement Bars, Epoxy Coated			POUND	92,870
Bridge Deck Grooving (Longitudinal)			SQ YD	380
Diamond Grinding (Bridge Section)			SQ YD	366
Form Liner Textured Surface (Special)			SQ FT	105
Concrete Color Additive			CU YD	4.9
Bar Splicers			EACH	290
Concrete Sealant (Special)			SQ YD	9

Structure No. 016-1121 (SB)

Bar	No.	Size	Length	Shape
a57(E)	240	#8	19'-2"	
a58(E)	180	#5	20'-6"	
a59(E)	138	#5	7'-4"	
a60(E)	240	#8	23'-5"	
a61(E)	90	#5	26'-9"	
b53(E)	282	#9	29'-8"	
b54(E)	178	#8	29'-8"	
b55(E)	8	#5	14'-8"	
b56(E)	8	#5	28'-4"	
b57(E)	2	#5	15'-1"	
d52(E)	138	#5	8'-6"	
d53(E)	138	#5	6'-5"	
e55(E)	24	#4	14'-8"	
e56(E)	24	#4	28'-4"	
t50(E)	328	#4	13'-1"	
w50(E)	160	#5	18'-11"	
w51(E)	160	#5	24'-1"	
Concrete Structures			CU YD	75.5
Concrete Superstructures			CU YD	8.7
Concrete Superstructure (Approach Slab)			CY YD	165.8
Protective Coat			SQ YD	415
Reinforcement Bars, Epoxy Coated			POUND	92,240
Bridge Deck Grooving (Longitudinal)			SQ YD	368
Diamond Grinding (Bridge Section)			SQ YD	355
Form Liner Textured Surface (Special)			SQ FT	105
Concrete Color Additive			CU YD	4.9
Bar Splicers			EACH	290
Concrete Sealant (Special)			SQ YD	9

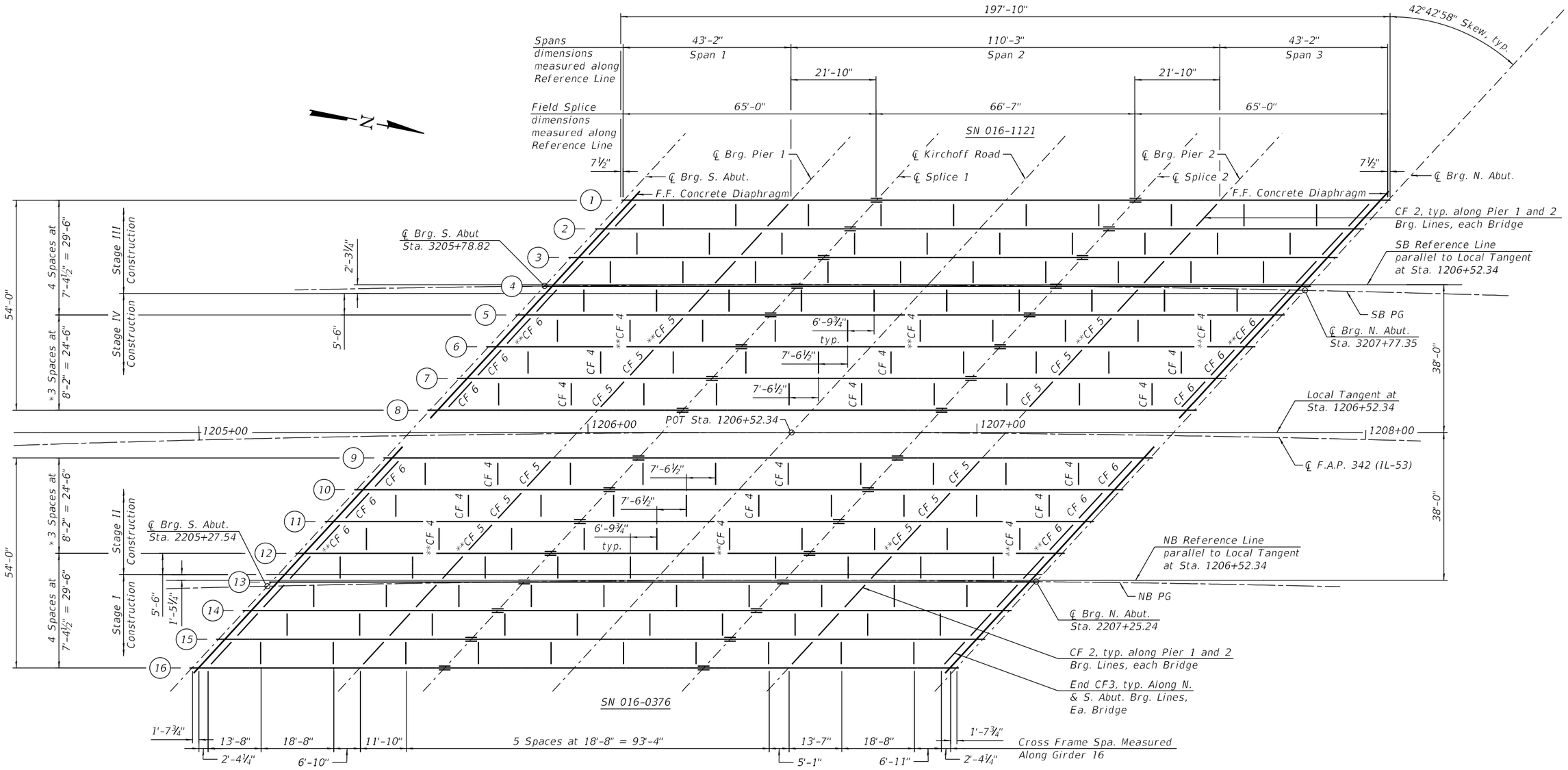

FRAMING PLANS

* CF4 is present between Girders 5-6, 6-7, 7-8, 9-10, 10-11, and 11-12 at each perpendicular Interior Cross Frame location. For clarity, only one location is marked in each span, excluding Cross Frames at bearing lines marked otherwise.

** Use long slotted holes on each connection plate each side of cross frame between stage I/II and stage III/IV construction see sheet 49 of 66 for detail.

Notes:
1. Work this sheet with sheets 36 thru 40 of 66.
2. All interior cross frames shall be CF 1 U.N.O.
3. For Layout Sketch, see sheet 2 of 66.

STRAND ASSOCIATES®
1170 SOUTH HOUBOLT ROAD
JOLIET, ILLINOIS 60431
(815) 744-4200
IDFPR NO. 184-001273

USER NAME = codyh	DESIGNED - TJE	REVISED -	
	CHECKED - NDR	REVISED -	
PLOT SCALE = 0:2.0000 ':" / in.	DRAWN - CJH	REVISED -	
PLOT DATE = 9/24/2024	CHECKED - TJE	REVISED -	

STATE OF ILLINOIS
DEPARTMENT OF TRANSPORTATION

FRAMING PLANS
STRUCTURE NO. 016-0376 (NB) AND 016-1121 (SB)

SHEET 35 OF 66 SHEETS

F.A.P. RTE.	SECTION	COUNTY	TOTAL SHEETS	SHEET NO.
342	(531) BR 23	COOK	1211	720
		CONTRACT NO. 62W38		
	ILLINOIS	FED. AID PROJECT		

MODEL: Default
FILE NAME: S:\IDL6300-6399\63461\13\Drawings\CAD\Micro-SSA\CAD_Sheets\0160376121-C3-035-FP-SAL.dgn
9/24/2024 2:19:22 PM

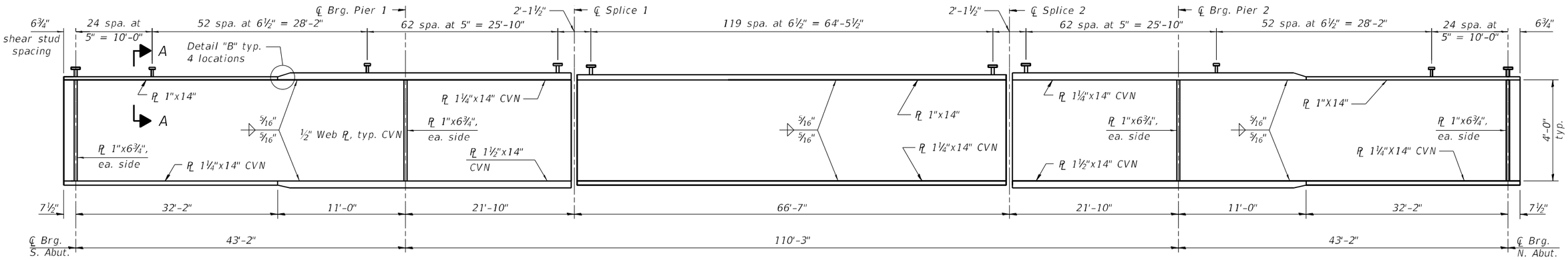

GIRDER ELEVATION 1-8

(SN 016-1121)

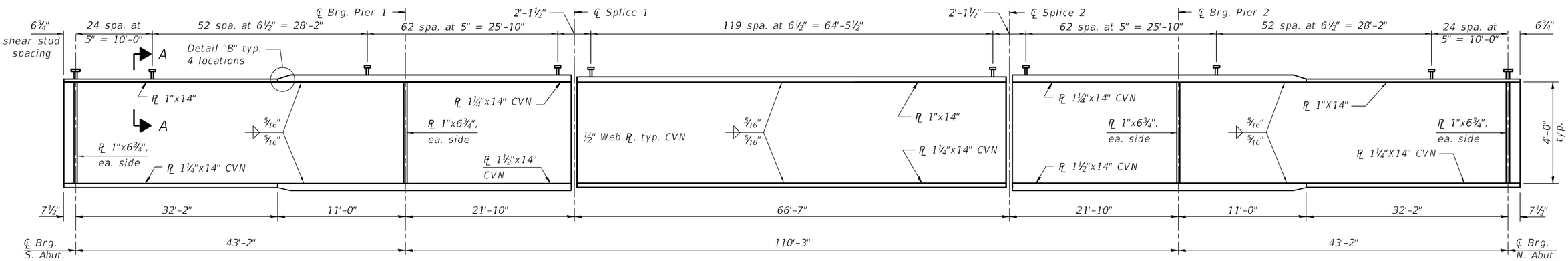

GIRDER ELEVATION 9-16

(SN 016-0376)

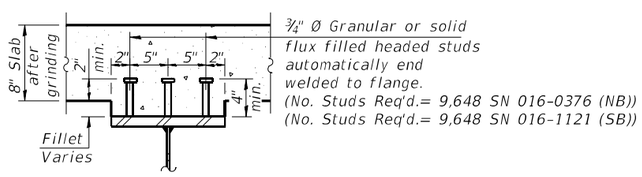

SECTION A-A

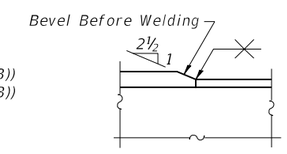

DETAIL "B"

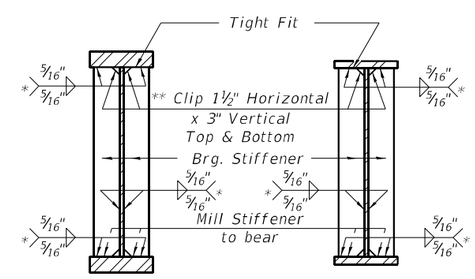

SECTION AT PIER

SECTION AT ABUTMENT

* Terminate ¼" (±½") from the end of plate intersects.

** Clip may be rounded with 1" radius for ease of shop painting.

Note:

1. Load carrying components designated "CVN" shall conform to the Charpy-V-Notch Impact Energy Requirement, Zone 2.

MODEL: Default
FILE NAME: S:\IDL\6300--6399\6346\113\Drawings\CAD\Micros5S4\CAD_Sheets\0160376112 1-C3-036-GED-SAt.dgn

STRAND ASSOCIATES 1170 SOUTH HOUBOLT ROAD JOLIET, ILLINOIS 60431 (815) 744-4200 IDFPR NO. 184-001273	USER NAME = codyh	DESIGNED - TJE	REVISED -	STATE OF ILLINOIS DEPARTMENT OF TRANSPORTATION	GIRDER ELEVATION AND DETAILS STRUCTURE NO. 016-0376 (NB) AND 016-1121 (SB)
		CHECKED - NDR	REVISED -		
	PLOT SCALE = 0:2.0000 ':" / in.	DRAWN - CJH	REVISED -		
	PLOT DATE = 9/20/2024	CHECKED - TJE	REVISED -		SHEET 36 OF 66 SHEETS

F.A.P. RTE.	SECTION	COUNTY	TOTAL SHEETS	SHEET NO.
342	(531) BR 23	COOK	1211	721
		CONTRACT NO. 62W38		
	ILLINOIS	FED. AID PROJECT		

9/20/2024 3:11:50 PM

SN 0160-376 (NB) AND SN 016-1121 (SB)

(Note: Girder 7 and 10 used for Load Ratings, Respectively)

Interior GIrder Moment Table				
		0.3 Sp. 1 0.7 SP. 3	Pier 1 Pier 2	0.5 Sp. 2
I_s	(in^4)	23,487	27,964	23,487
$I_c(n)$	(in^4)	60,091	67,663	60,091
$I_c(3n)$	(in^4)	45,153	50,744	45,153
$I_c(cr)$	(in^4)	27,642	35,261	———
S_s	(in^3)	1,019	1,074	1,019
$S_c(n)$	(in^3)	1,373	———	1,373
$S_c(3n)$	(in^3)	1,276	———	1,276
$S_c(cr)$	(in^3)	———	1,578	———
S_x	(in^3)	11,189	11,044	1,373
DC1	(k/')	1.14	1.16	1.14
M_{DC1}	('k)	-90	-981	719
DC2	(k/')	0.16	0.16	0.16
M_{DC2}	('k)	-11	-158	121
DW	(k/')	0.18	0.18	0.18
M_{DW}	('k)	-11	-157	121
LLDF		0.64	0.65	0.54
M_{LL+IM}	('k)	527.10	-1054.97	1005.84
f_l (Strength I)	(ksi)	10.00	-10.00	10.00
$M_u + {}^1/_3 f_l S_x$	('k)	3,888	-6,573	3,374
$\Phi_f M_n$	('k)	6,809	———	7,162
f_s DC1	(ksi)	-1.06	-10.97	8.47
f_s DC2	(ksi)	-0.10	-1.20	1.14
f_s DW	(ksi)	-0.10	-1.19	1.13
f_s (LL + IM)	(ksi)	4.96	-8.02	8.79
f_l (Service II)	(ksi)	10.00	-10.00	10.00
$f_s + {}^{f_l}/_2$ (Service II)	(ksi)	10.18	-28.79	27.17
Service II Resistance	(ksi)	47.50	47.50	47.50
$f_s + {}^{f_l}/_3$ (Strength I)	(ksi)	10.40	-34.38	32.43
$\Phi_f F_n$	(ksi)	———	50	———
V_f	(k)	64	93	73

SN 0160-376 (NB) AND SN 016-1121 (SB)

(Note: Girder 7 and 10 used for Load Ratings, Respectively)

Girder Reaction Table					
		South Abutment North Abutment		Pier 1 Pier 2	
		Interior	Exterior	Interior	Exterior
LLDF		0.826	0.677	0.826	0.677
OCF		1.185	1.185	———	———
R_{DC1}	(k)	52.9	46.6	116.9	105.6
R_{DC2}	(k)	0.5	0.4	18.1	17.3
R_{DW}	(k)	0.5	0.4	17.9	17.2
R_{LL}	(k)	73.8	54.5	149.1	130.3
R_{IM}	(k)	21.1	14.5	34.8	28.2
R_{Total} (Strength I+ Impact)	(k)	233.6	180.1	517.4	456.8
R_{Total} (Strength I)	(k)	196.7	154.7	456.5	407.5

Note:

1. Rdc1 includes reactions from the concrete diaphragm equal to 21.9 kips and the cast-in-place approach slab equal to 27.5 kips.

DEFINITIONS

I_s, S_s: Non-composite moment of inertia and section modulus of the steel section used for computing f_s (Total-Strength I, and Service II) due to non-composite dead loads ($in.^4$ and $in.^3$).

I_c (n), S_c (n): Composite moment of inertia and section modulus of the steel and deck based upon the modular ratio, "n", used for computing f_s (Total-Strength I, and Service II) in uncracked sections due to short-term composite live loads ($in.^4$ and $in.^3$).

I_c (3n), S_c (3n): Composite moment of inertia and section modulus of the steel and deck based upon 3 times the modular ratio, "3n", used for computing f_s (Total-Strength I, and Service II) in uncracked sections, due to long-term composite (superimposed) dead loads ($in.^4$ and $in.^3$).

I_c (cr), S_c (cr): Composite moment of inertia and section modulus of the steel and longitudinal deck reinforcement, used for computing f_s (Total-Strength I and Service II) in cracked sections, due to both short-term composite live loads and long-term composite (superimposed) dead loads ($in.^4$ and $in.^3$).

S_x: Section modulus about the major axis of a section to the controlling flange, tension or compression, taken as yield moment with respect to the controlling flange over the yield strength of the controlling flange ($in.^3$).

DC1: Un-factored non-composite dead load (kips/ft.).

M_{DC1}: Un-factored moment due to non-composite dead load (kip-ft.).

DC2: Un-factored long-term composite (superimposed excluding future wearing surface) dead load (kips/ft.).

M_{DC2}: Un-factored moment due to long-term composite (superimposed excluding future wearing surface) dead load (kip-ft.).

DW: Un-factored long-term composite (superimposed future wearing surface only) dead load (kips/ft.).

M_{DW}: Un-factored moment due to long-term composite (superimposed future wearing surface only) dead load (kip-ft.).

LLDF: Live Load Distribution Factor for moment and shear computed according to Article 4.6.2.2 and further IDOT provisions.

M_{LL+IM}: Un-factored live load moment plus dynamic load allowance (impact)(kip-ft.).

M_u: Strength I load combination of factored design moments (kip-ft.).
$1.25\ (M_{DC1} + M_{DC2}) + 1.5\ M_{DW} + 1.75\ M_{LL+IM}$

f_l: Factored calculated flange lateral bending stress as calculated using Article 6.10.1.6 and as further simplified by IDOT provisions (ksi).

$\Phi_f M_n$: Factored nominal flexural resistance of the section determined as specified in Article 6.10.7.1 or A6 as applicable (kip-ft.).

f_sDC1: Un-factored stress at edge of flange for controlling steel flange due to vertical non-composite dead loads as calculated below (ksi).
M_{DC1}/S_s

f_sDC2: Un-factored stress at edge of flange for controlling steel flange due to vertical composite dead loads as calculated below (ksi).
M_{DC2} / S_c (3n) or M_{DC2} / S_c (cr) as applicable.

f_sDW: Un-factored stress at edge of flange for controlling steel flange due to vertical composite future wearing surface loads as calculated below (ksi).
M_{DW} / S_c (3n) or M_{DW} / S_c (cr) as applicable.

f_s (M_{LL}+IM): Un-factored stress at edge of flange for controlling steel flange due to vertical composite live load plus impact loads as calculated below (ksi).
M_{LL+IM} / S_c (n) or M_{LL+IM} / S_c (cr) as applicable.

$f_s + f_l/2$ (Service II): Sum of stresses as computed below (ksi).
f_s DC1 + f_s DC2 + f_s DW + 1.3 f_s (M_{LL} + IM) + $f_l/2$

Service II Resistance: Composite ($0.95R_hF_{yf}$) or noncomposite ($0.80R_hF_{yf}$) stress capacity according to Article 6.10.4.2 (ksi).

$f_s + f_l/3$ (Strength I): Sum of stresses as computed below on non-compact sections (ksi).
1.25 (f_s DC1 + f_s DC2) + 1.5 f_s DW + 1.75 f_s (M_{LL} + IM) + $f_l/3$

$\Phi_f F_n$: Factored nominal flexural resistance of the section as specified in Article 6.10.7.2 or 6.10.8 as applicable (ksi).

V_f: Maximum factored shear range in span computed according to Article 6.10.10.

OCF: Obtuse Correction Factor according to Article 4.6.2.2.3c or as further simplified by IDOT provisions.

R_{DC1}: Un-factored reaction due to non-composite dead load (kip).

R_{DC2}: Un-factored reaction due to long-term composite (superimposed excluding future wearing surface) dead load (kip).

R_{DW}: Un-factored reaction due to long-term composite (superimposed future wearing surface only) dead load (kip).

R_{LL}: Un-factored live load reaction (kip).

R_{IM}: Un-factored dynamic load allowance (impact) (kip).

R_{Total}(Strength I)(Impact): Strength I load combination of factored design reactions (kip).
1.25 (R_{DC1} + R_{DC2}) + 1.5R_{DW} + 1.75 (R_{LL} + R_{IM})

R_{Total}(Strength I)(No Impact): Strength I load combination of factored design reactions, not including dynamic load allowance (Impact) (kip).
1.25 (R_{DC1} + R_{DC2}) + 1.5R_{DW} + 1.75 (R_{LL})

Note:
M_{LL} and R_{LL} include the effects of centrifugal force and superelevation.

1. SN 016-0376 (NB) and 016-1121 (SB) are designed with identical interior moments and reactions
2. Girder 7 on SN 016-0376 and girder 10 on SN 016-1121 controls and load rating

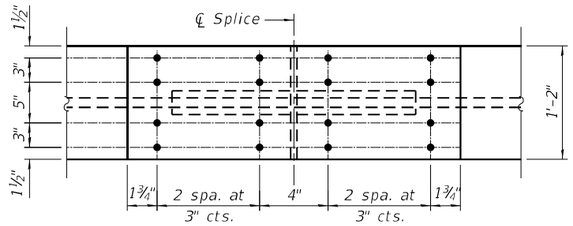

TOP FLANGE

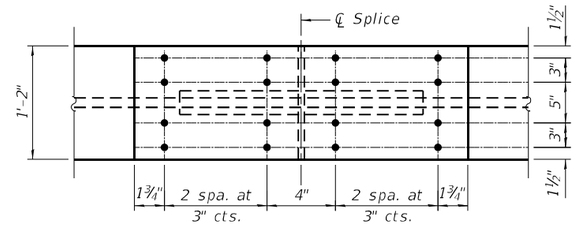

TOP FLANGE

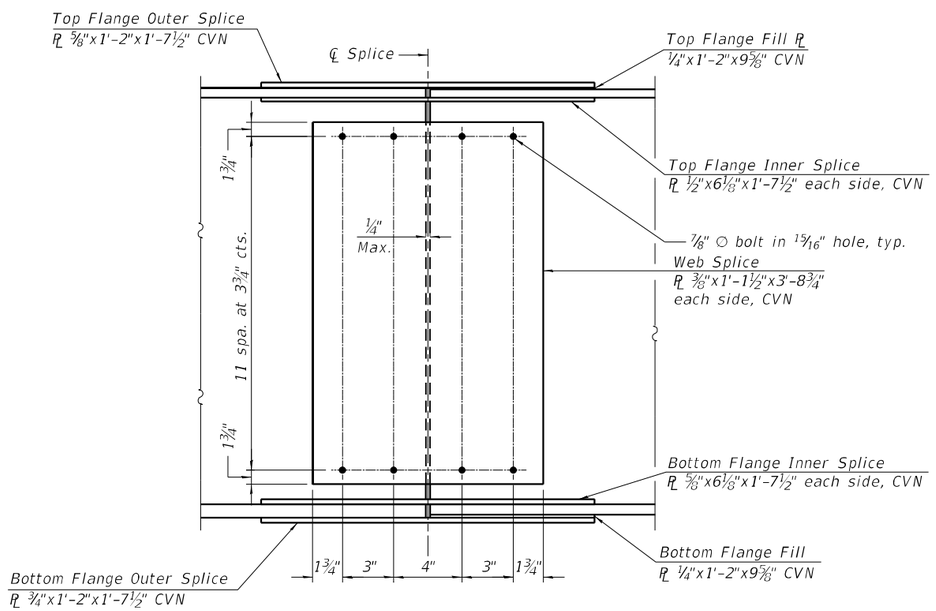

WEB SPLICE

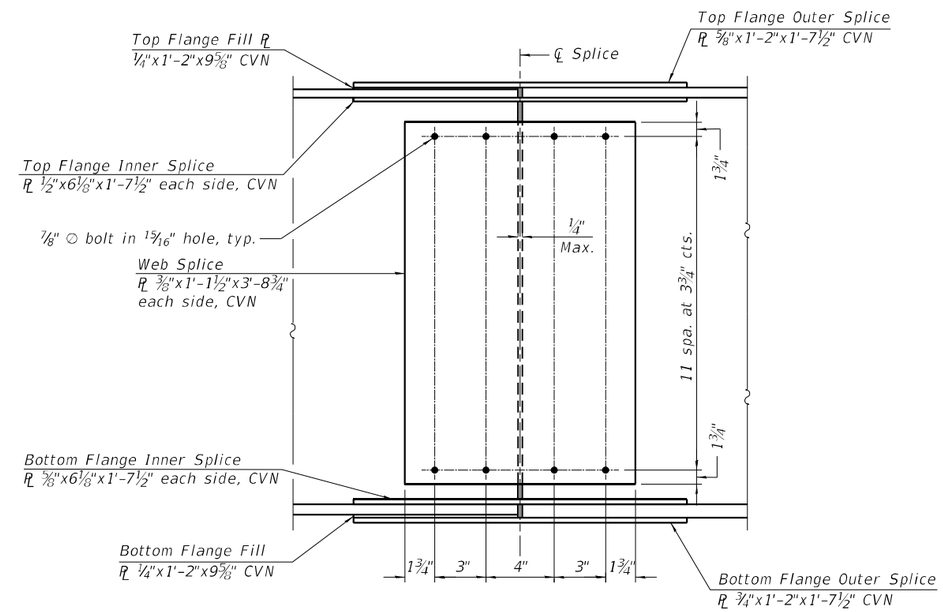

WEB SPLICE

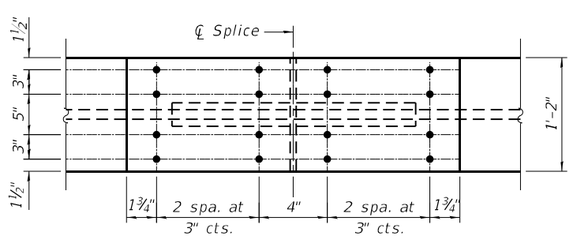

BOTTOM FLANGE

(Field Splice #1)

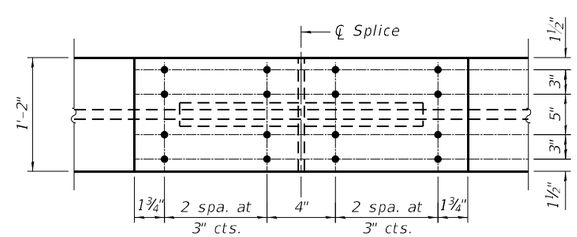

BOTTOM FLANGE

(Field Splice #2)

Note:
1. Load carrying components designated "CVN" shall conform to the Charpy-V-Notch impact energy requirements, Zone 2.

MODEL: Default
FILE NAME: S:\IDL\6300-63996346\113\Drawings\CAD\Micros-SSA\CAD_Sheets\0160376112 1-C3-038-SD-SA1.dgn

STRAND ASSOCIATES
1170 SOUTH HOUBOLT ROAD
JOLIET, ILLINOIS 60431
(815) 744-4200
IDFPR NO. 184-001273

USER NAME = codyh	DESIGNED - TJE	REVISED -	
	CHECKED - NDR	REVISED -	
PLOT SCALE = 0:2.0000 ':" / in.	DRAWN - CJH	REVISED -	
PLOT DATE = 9/20/2024	CHECKED - TJE	REVISED -	

STATE OF ILLINOIS
DEPARTMENT OF TRANSPORTATION

SPLICE DETAILS
STRUCTURE NO. 016-0376 (NB) AND 016-1121 (SB)

SHEET 38 OF 66 SHEETS

F.A.P. RTE.	SECTION	COUNTY	TOTAL SHEETS	SHEET NO.
342	(531) BR 23	COOK	1211	723
		CONTRACT NO. 62W38		
	ILLINOIS	FED. AID PROJECT		

9/20/2024 3:11:53 PM

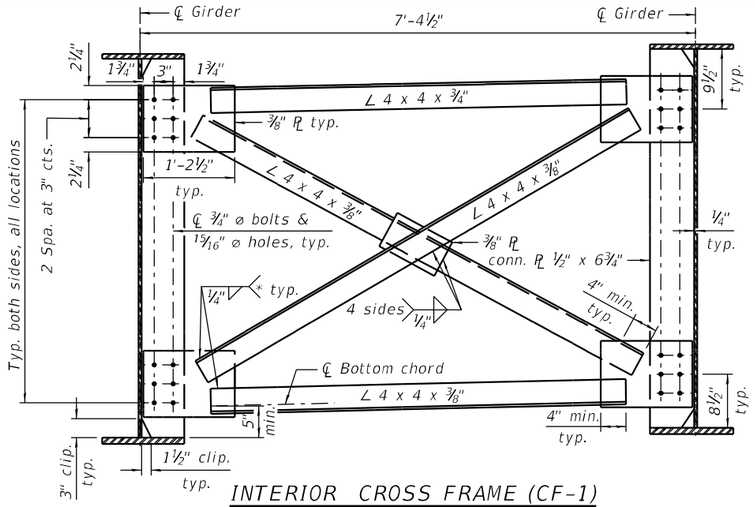

INTERIOR CROSS FRAME (CF-1)

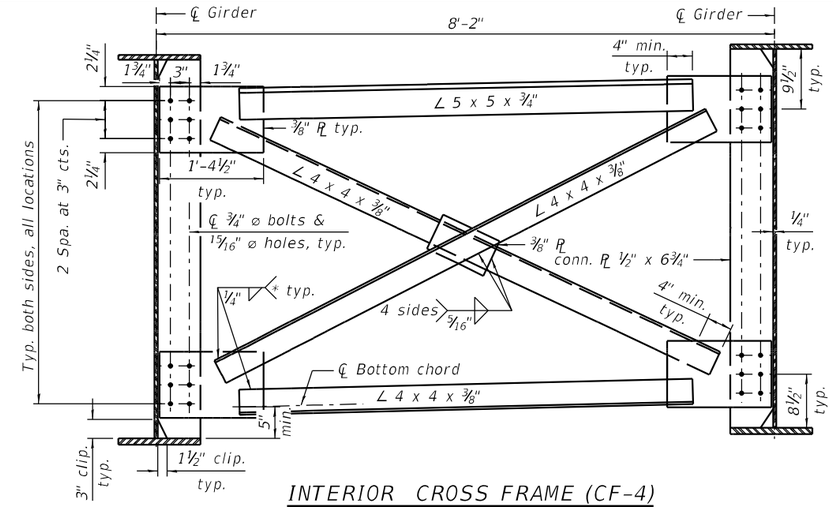

INTERIOR CROSS FRAME (CF-4)

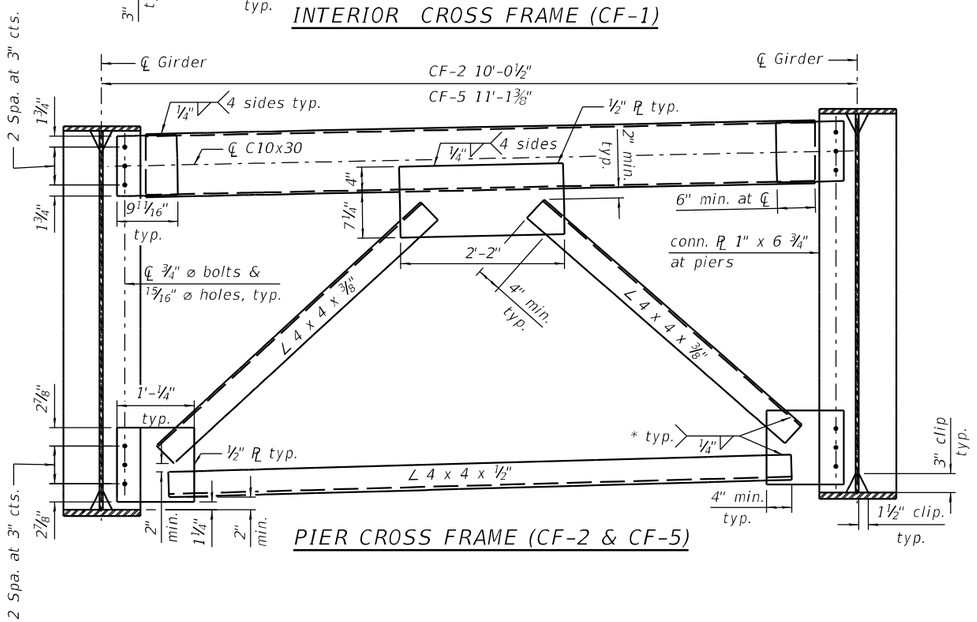

PIER CROSS FRAME (CF-2 & CF-5)

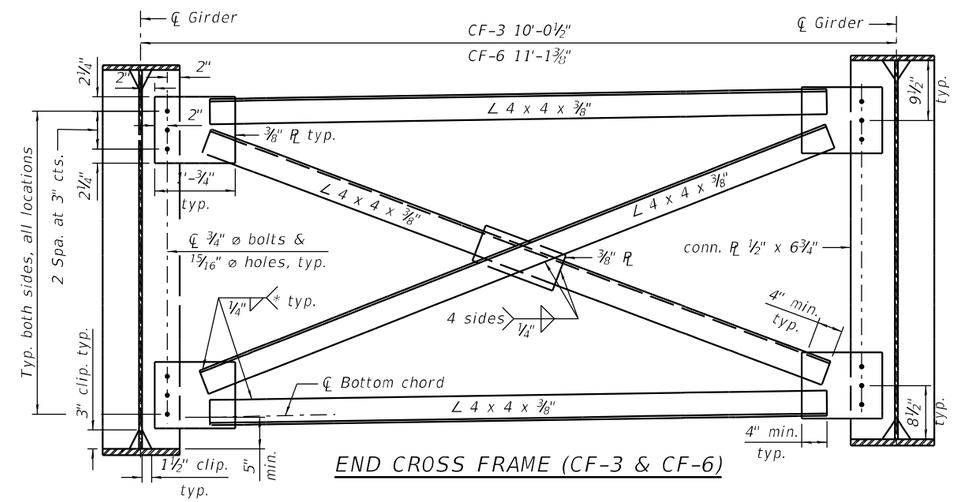

END CROSS FRAME (CF-3 & CF-6)

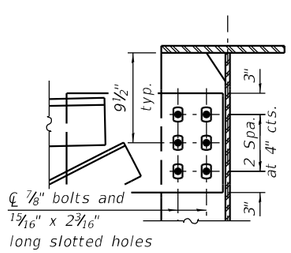

** CONNECTION PLATE DETAIL (CF-4)

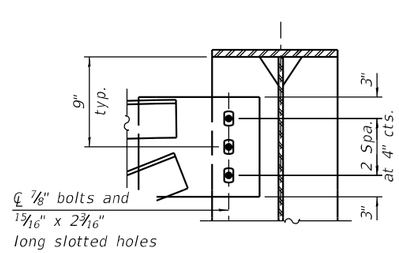

** CONNECTION PLATE DETAIL (CF-5 AND CF-6)

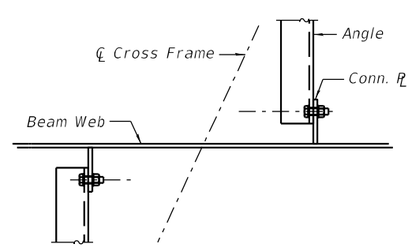

INTERIOR CROSS FRAME CONNECTION DETAIL

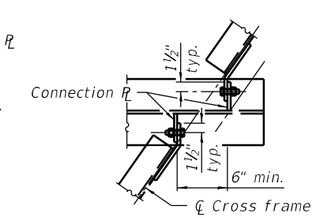

END CROSS FRAME CONNECTION DETAIL

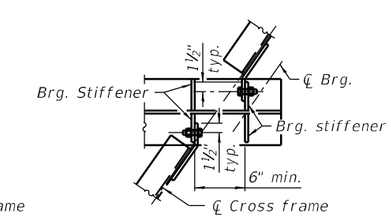

PIER CROSS FRAME CONNECTION DETAIL

* Fillet weld angles along 3 sides on one face of gusset plate; however, if cross-frames are galvanized, weld all-around.

** Use long slotted holes on each connection plate each side of cross frame between stage I/II and stage III/IV construction.

Notes:

1. Two hardened washers required for each set of over sized holes.
2. All cross frames or diaphragms shall be installed as steel is erected and secured with erection pins and bolts except as otherwise noted. Individual cross frames or diaphragms at supports may be temporarily disconnected to install bearing anchor bolts.
3. All Cross frames shall be grade 36 steel.
4. Load carrying components designated "CVN" shall conform to the Charpy-V-Notch Impact Energy Requirement, Zone 2.

STRAND ASSOCIATES®
1170 SOUTH HOUBOLT ROAD
JOLIET, ILLINOIS 60431
(815) 744-4200
IDFPR NO. 184-001273

USER NAME = codyh	DESIGNED - TJE	REVISED -	
	CHECKED - NDR	REVISED -	
PLOT SCALE = 0:2.0000 ':" / in.	DRAWN - CJH	REVISED -	
PLOT DATE = 9/24/2024	CHECKED - TJE	REVISED -	

STATE OF ILLINOIS
DEPARTMENT OF TRANSPORTATION

CROSS FRAMES AND BEAM DETAILS
STRUCTURE NO. 016-0376 (NB) AND 016-1121 (SB)

SHEET 39 OF 66 SHEETS

F.A.P. RTE.	SECTION	COUNTY	TOTAL SHEETS	SHEET NO.
342	(531) BR 23	COOK	1211	724
		CONTRACT NO. 62W38		
	ILLINOIS	FED. AID PROJECT		

MODEL: Default
FILE NAME: S:\IOL\6300-6399\6346\113\Drawings\CAD\Micros-SS4\CAD_Sheets\0160376\121-C3-039-CFBD-SA1.dgn
9/24/2024 2:21:31 PM

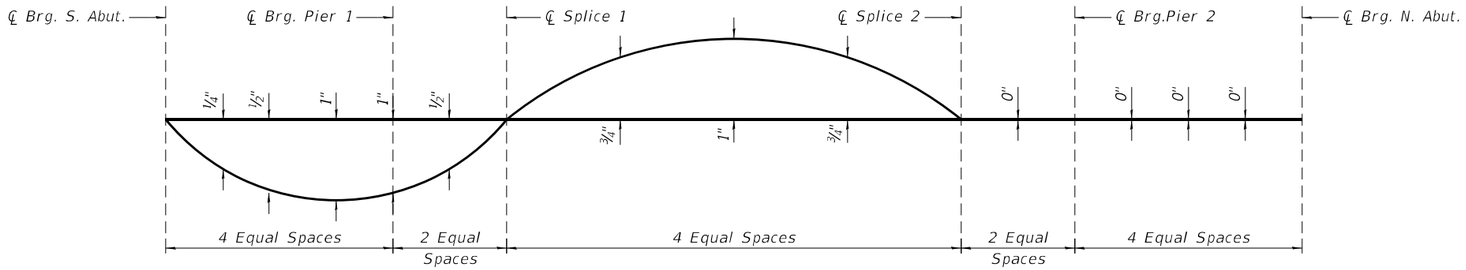

CAMBER DIAGRAM

SN 016-1121 (SB)

	Top of Web Elevations (For Fabrication Only)					
Girder No.	CL Brg. S. Abut	CL Brg. Pier 1	CL Splice 1	CL Splice 2	CL Brg. Pier 2	CL Brg. N. Abut.
1	750.84	750.85	750.86	750.65	750.48	750.21
2	750.67	750.71	750.72	750.53	750.36	750.09
3	750.50	750.56	750.58	750.42	750.26	750.02
4	750.34	750.40	750.44	750.30	750.15	749.92
5	750.17	750.25	750.30	750.18	750.04	749.82
6	749.98	750.08	750.13	750.05	749.92	749.71
7	749.79	749.90	749.96	749.91	749.79	749.60
8	749.60	749.72	749.79	749.76	749.65	749.48

SN 016-0376 (NB)

	Top of Web Elevations (For Fabrication Only)					
Girder No.	CL Brg. S. Abut	CL Brg. Pier 1	CL Splice 1	CL Splice 2	CL Brg. Pier 2	CL Brg. N. Abut.
9	751.03	751.09	751.12	750.96	750.82	750.58
10	750.84	750.92	750.96	750.83	750.69	750.47
11	750.65	750.75	750.80	750.70	750.57	750.36
12	750.45	750.57	750.63	750.56	750.44	750.24
13	750.27	750.40	750.47	750.43	750.32	750.14
14	750.09	750.24	750.31	750.29	750.20	750.03
15	749.90	750.07	750.15	750.16	750.07	749.93
16	749.72	749.90	749.99	750.03	749.95	749.82

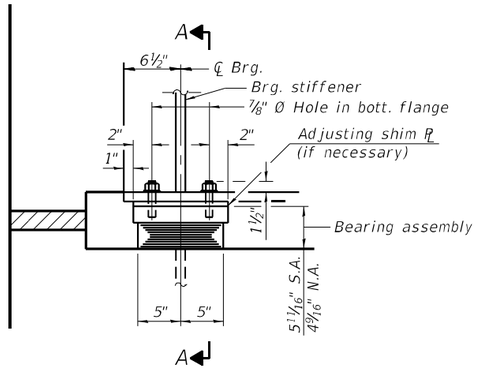

ELEVATION AT SOUTH AND NORTH ABUT.

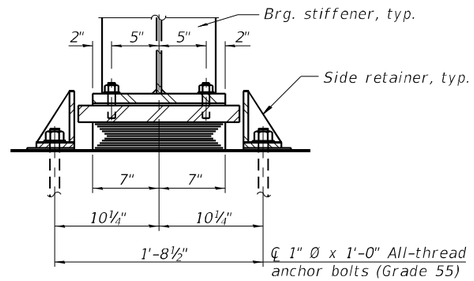

SECTION A-A

TYPE I ELASTOMERIC EXP. BRG.

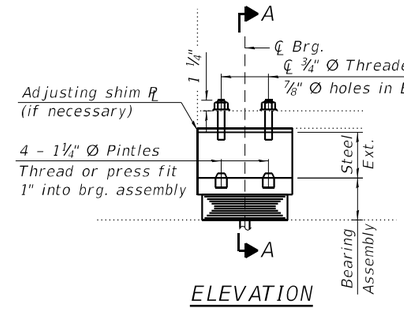

ELEVATION

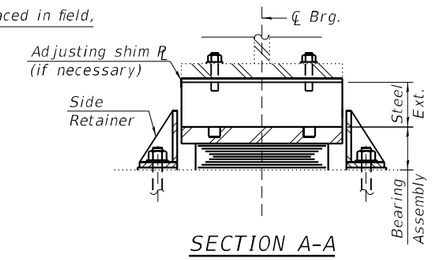

SECTION A-A

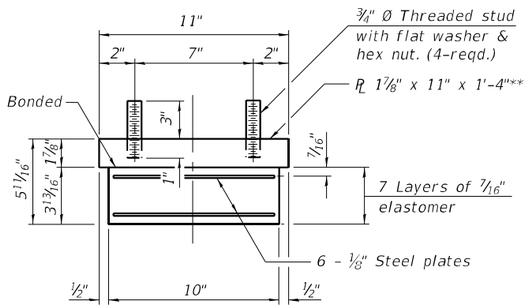

BEARING ASSEMBLY

(South Abut.)

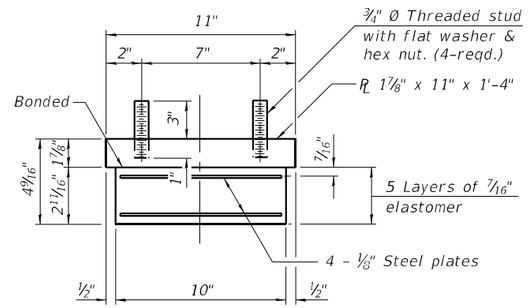

BEARING ASSEMBLY

(North Abut.)

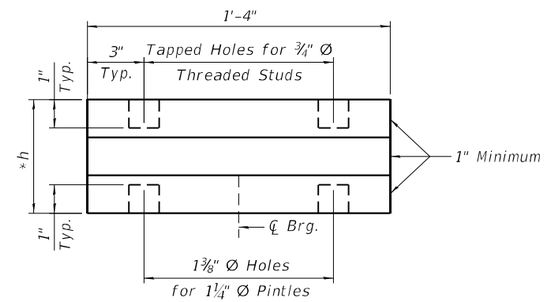

ELEVATION STACKED PLATE STEEL EXTENSION

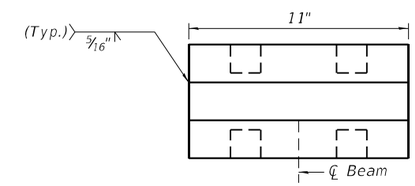

END VIEW STACKED PLATE STEEL EXTENSION

Note:
Shim plates shall not be placed under bearing assembly.

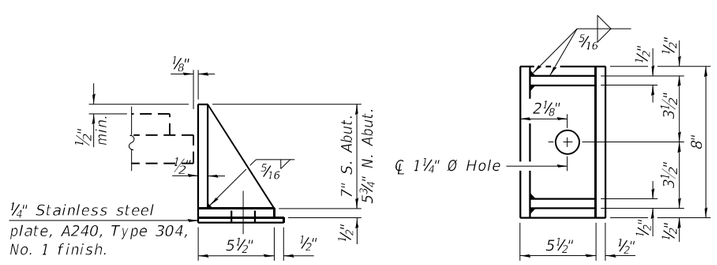

SIDE RETAINER

Equivalent rolled angle with stiffeners will be allowed in lieu of welded plates.

STACKED PLATE STEEL EXTENSION HEIGHT, *h TABLE

S.N. 016-1121	
Beam	S. Abut.
BEAM 1	-
BEAM 2	-
BEAM 3	-
BEAM 4	-
BEAM 5	-
BEAM 6	-
BEAM 7	3 15/16
BEAM 8	1 11/16

Note:
1. Steel extension assembly heights are in inches.

BILL OF MATERIAL

Item	Unit	Total
Elastomeric Bearing Assembly, Type I	EACH	32
Anchor Bolts, 1"	EACH	64

Notes:
1. Side retainers and stainless steel plates shall be included in the cost of Elastomeric Bearing Assembly, Type I.
2. Anchor bolts and side retainers at all supports shall be installed as each member is erected unless an equivalent temporary means of lateral restraint is used.
3. Two ⅛" adjusting shims shall be provided for each bearing in addition to all other places or shims and placed as shown on bearing details.
4. All separate bearing plates, side retainers, anchor bolts, nuts, washers, and pintles shall be galvanized according to AASHTO M111 or M232 as applicable.
5. The cost of steel extension, shim plates, and all connection bolts are included with the cost of Furnishing and Erecting Structural Steel.
* 6. Prior to ordering any material, the Contractor shall field verify all steel bearing extension heights at abutment bearing locations.
** 7. S.N. 016-1121 South Abutment Beam 8, top brg. plate thickness to be 1⅞" + *h at Beam 8 for a total height of 3⁹⁄₁₆".

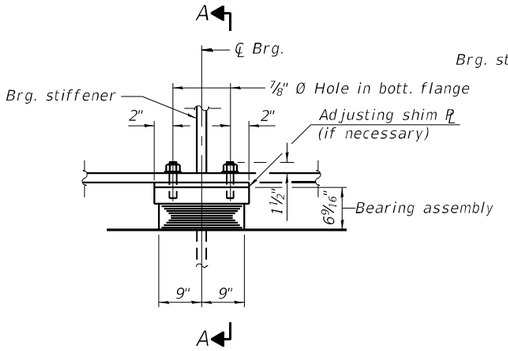

ELEVATION AT PIER 1

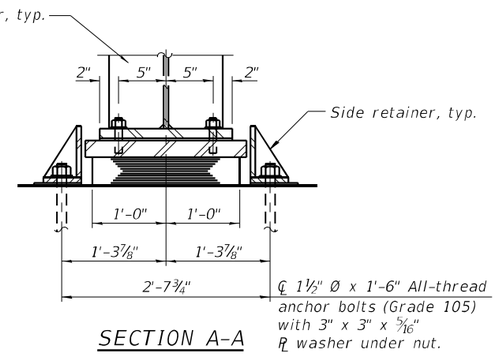

SECTION A-A

TYPE I ELASTOMERIC EXP. BRG.

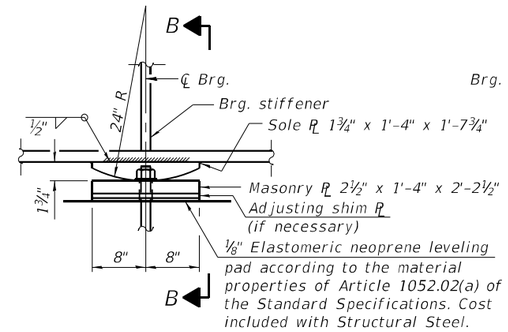

ELEVATION AT PIER 2

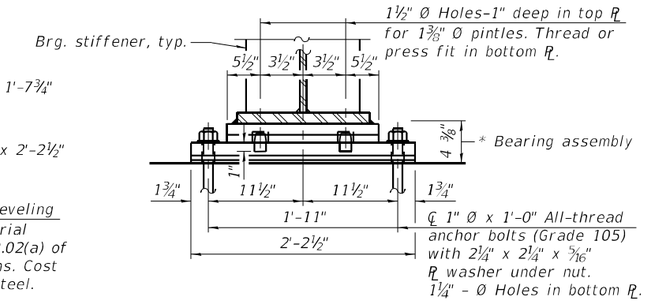

SECTION B-B

*(Excluding shim PL, if necessary)

FIXED BEARING

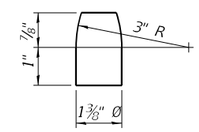

PINTLE

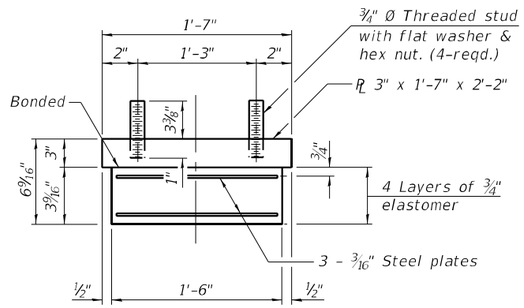

BEARING ASSEMBLY

Note:
Shim plates shall not be placed under bearing assembly.

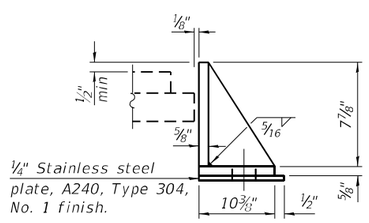

SIDE RETAINER

Equivalent rolled angle with stiffeners will be allowed in lieu of welded plates.

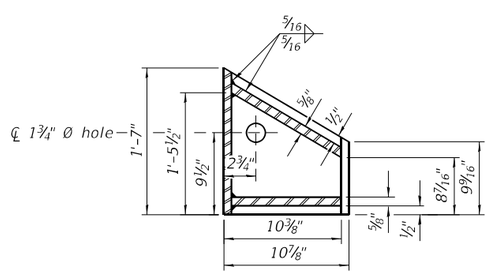

PIER 1 RETAINER

BILL OF MATERIAL

Item	Unit	Total
Elastomeric Bearing Assembly, Type I	EACH	16
Anchor Bolts, 1"	EACH	32
Anchor Bolts, 1 1/2"	EACH	32

Notes:
1. Side retainers and stainless steel plates shall be included in the cost of Elastomeric Bearing Assembly, Type I.
2. Anchor bolts and side retainers at all supports shall be installed as each member is erected unless an equivalent temporary means of lateral restraint is used.
3. Two ⅛" adjusting shims shall be provided for each bearing in addition to all other places or shims and placed as shown on bearing details.
4. All separate bearing plates, side retainers, anchor bolts, nuts, washers, and pintles shall be galvanized according to AASHTO M111 or M232 as applicable.
5. The cost of fixed bearing sole plate, masonry plate, and all connection hardware, with shim plates if necessary, are included with the cost of Furnishing and Erecting Structural Steel.

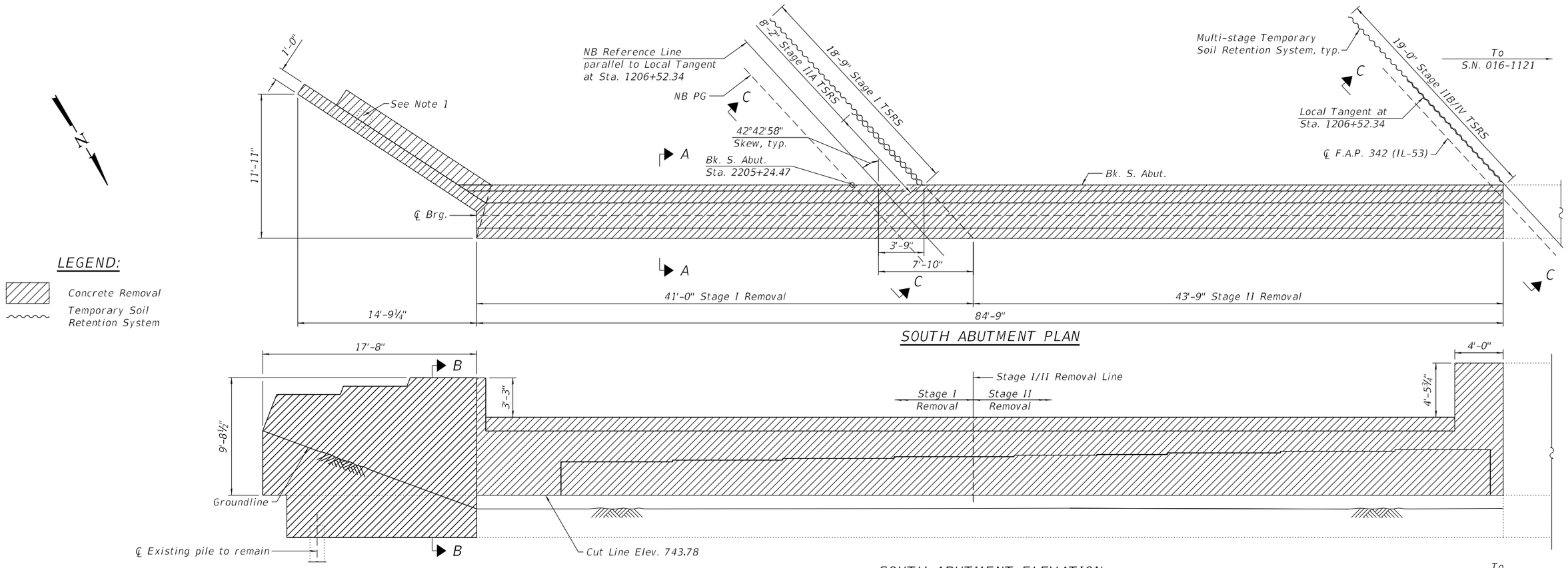

BILL OF MATERIALS

Item	Unit	Total
Concrete Removal	CU YD	61.0
Temporary Soil Retention System	SQ FT	318

Notes:

1. Contractor to take care not to damage pile or pile anchorage during Concrete Removal.
2. The elevations and dimensions shown are calculated based on existing plans and field measurements. The Contractor shall verify in field and make necessary approved adjustments prior to removal, repairs, or ordering of materials. For additional information, see Existing Drawings.
3. A cantilevered sheet piling design does not appear feasible and additional members or other retention systems may be necessary. The Contractor shall submit a Temporary Soil Retention System design including plan details and calculations for review and acceptance by the Engineer.
4. Specified Temporary Soil Retention System will be used for 2 separate construction stages due to necessary modifications required between stages.
5. For Offset sketch, see sheet 2 of 66.

STRAND ASSOCIATES
1170 SOUTH HOUBOLT ROAD
JOLIET, ILLINOIS 60431
(815) 744-4200
IDFPR NO. 184-001273

USER NAME = codyh	DESIGNED - BRL	REVISED -	
	CHECKED - NDR	REVISED -	
PLOT SCALE = 0:2.0000 ':" / in.	DRAWN - CJH	REVISED -	
PLOT DATE = 9/20/2024	CHECKED - NDR	REVISED -	

STATE OF ILLINOIS
DEPARTMENT OF TRANSPORTATION

CONCRETE REMOVAL / REPAIR (ABUTMENTS) (1 OF 2)
STRUCTURE NO. 016-0376 (NB)

SHEET 43 OF 66 SHEETS

F.A.P. RTE.	SECTION	COUNTY	TOTAL SHEETS	SHEET NO.
342	(531) BR 23	COOK	1211	728
		CONTRACT NO. 62W38		
		ILLINOIS	FED. AID PROJECT	

MODEL: Default
FILE NAME: S:\OL16300-6399\6346\113\Drawings\CAD\Micro-SSA\CAD_Sheets\0160376112-C3-043-CRNABUT1-SA1.dgn
9/20/2024 3:12:04 PM

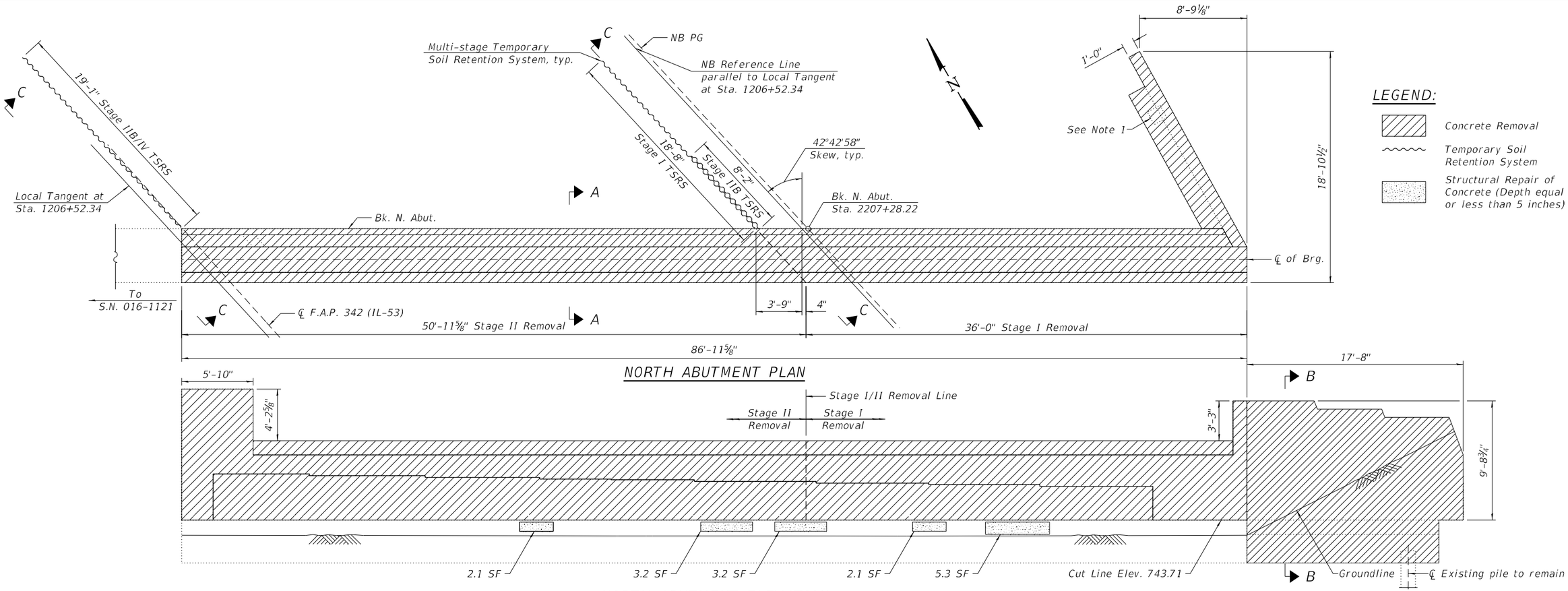

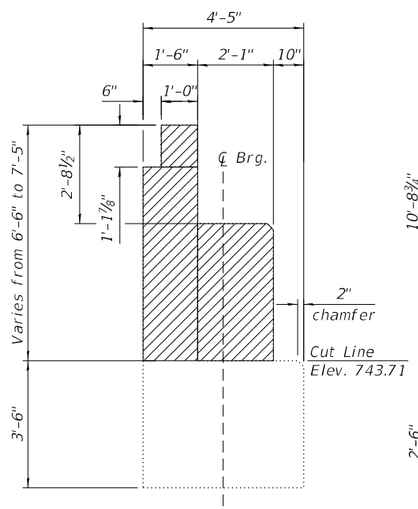

SECTION A-A

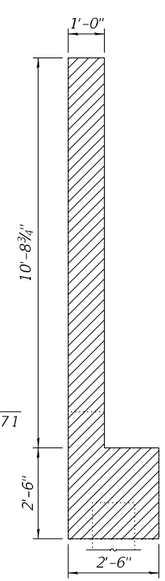

SECTION B-B

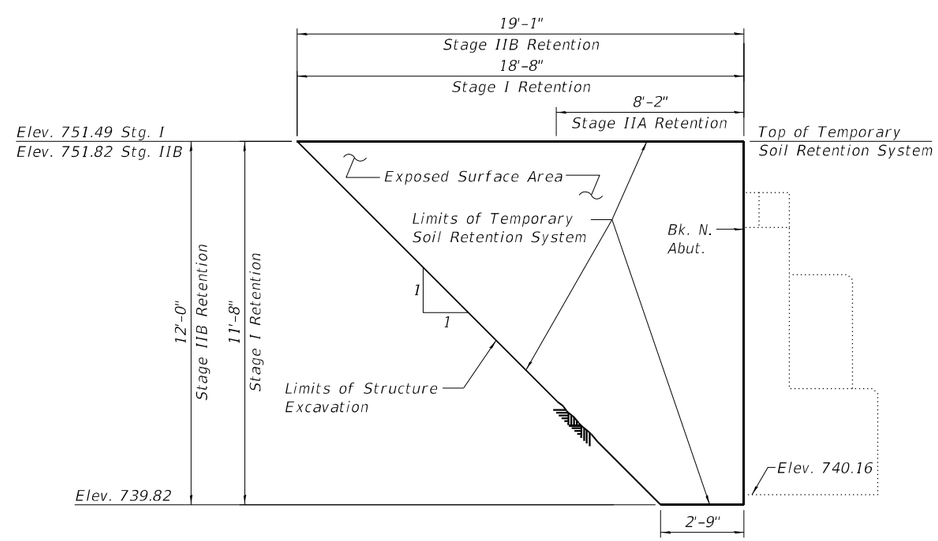

SECTION C-C - TEMPORARY SOIL RETENTION SYSTEM

BILL OF MATERIALS

Item	Unit	Total
Concrete Removal	CU YD	62.2
Temporary Soil Retention System	SQ FT	318
Structural Repair of Concrete (Depth Equal to or Less Than 5 Inches)	SQ FT	16

Notes:

1. Contractor to take care not to damage pile or pile anchorage during Concrete Removal.
2. The elevations and dimensions shown are calculated based on existing plans and field measurements. The Contractor shall verify in field and make necessary approved adjustments prior to removal, repairs, or ordering of materials. For additional information, see Existing Drawings.
3. A cantilevered sheet piling design does not appear feasible and additional members or other retention systems may be necessary. The Contractor shall submit a Temporary Soil Retention System design including plan details and calculations for review and acceptance by the Engineer.
4. Specified Temporary Soil Retention System will be used for 2 separate construction stages due to necessary modifications required between stages.
5. For Offset sketch, see sheet 2 of 66.

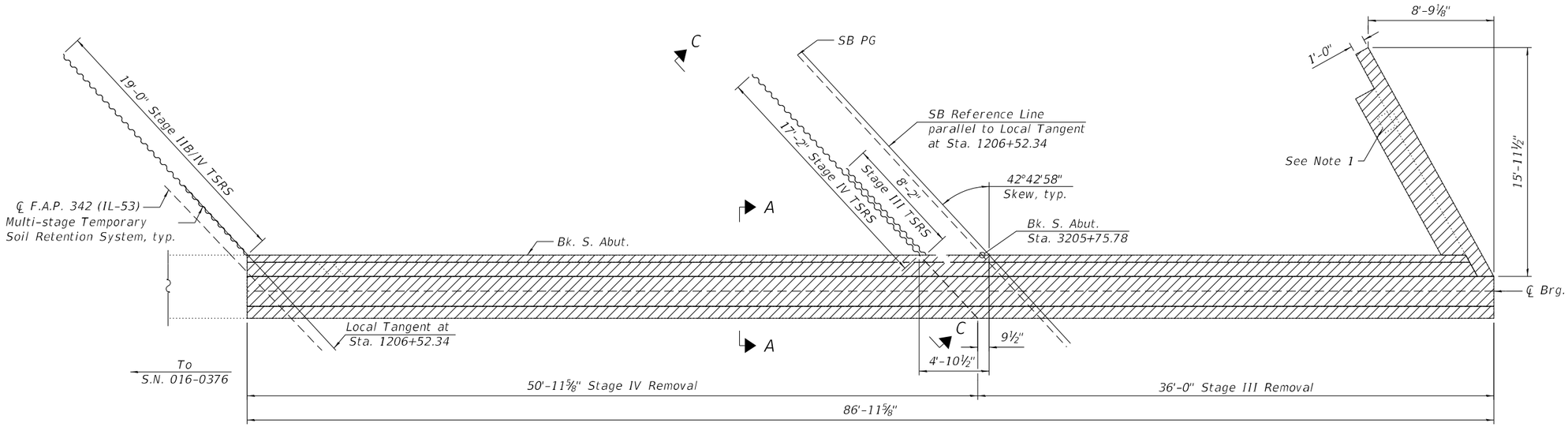

SOUTH ABUTMENT PLAN

LEGEND:

- Concrete Removal
- Temporary Soil Retention System

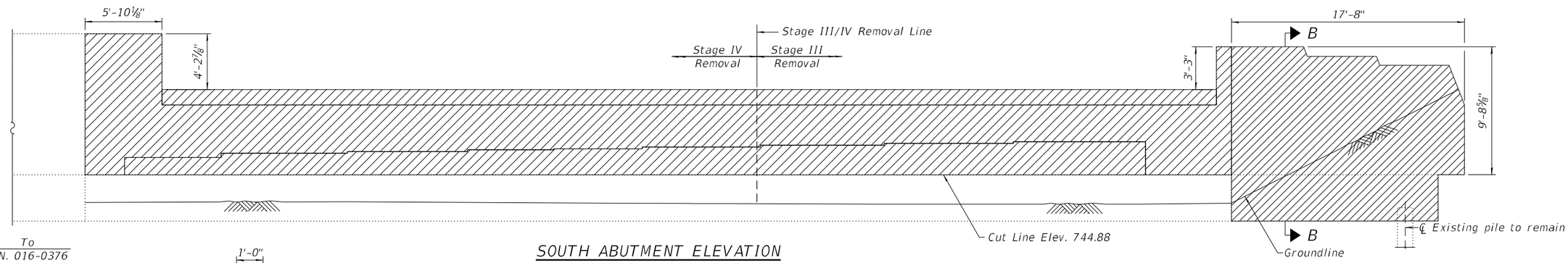

SOUTH ABUTMENT ELEVATION

(Looking South)

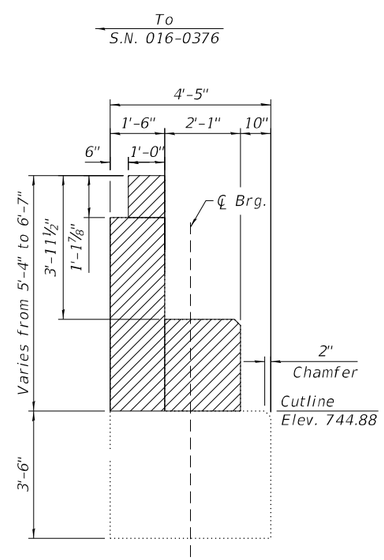

SECTION A-A

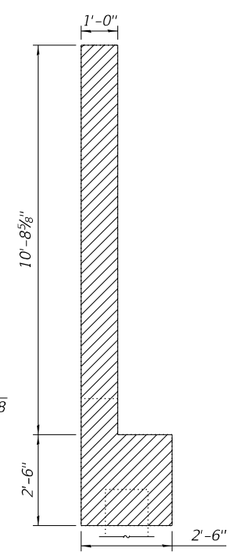

SECTION B-B

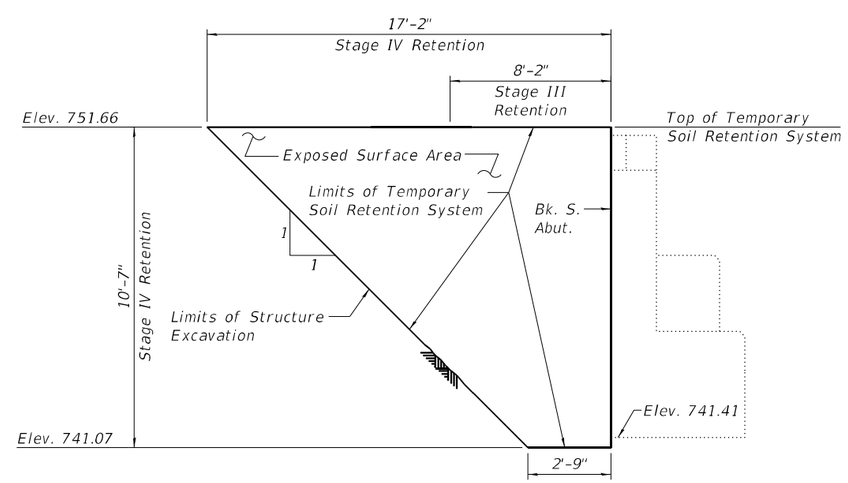

SECTION C-C - TEMPORARY SOIL RETENTION SYSTEM

BILL OF MATERIALS

Item	Unit	Total
Concrete Removal	CU YD	49.9
Temporary Soil Retention System	SQ FT	162

Notes:

1. Contractor to take care not to damage pile or pile anchorage during Concrete Removal.
2. The elevations and dimensions shown are calculated based on existing plans and field measurements. The Contractor shall verify in field and make necessary approved adjustments prior to removal, repairs, or ordering of materials. For additional information, see Existing Drawings.
3. A cantilevered sheet piling design does not appear feasible and additional members or other retention systems may be necessary. The Contractor shall submit a Temporary Soil Retention System design including plan details and calculations for review and acceptance by the Engineer.
4. Specified Temporary Soil Retention System will be used for 2 separate construction stages due to necessary modifications required between stages.
5. For Offset sketch, see sheet 2 of 66.

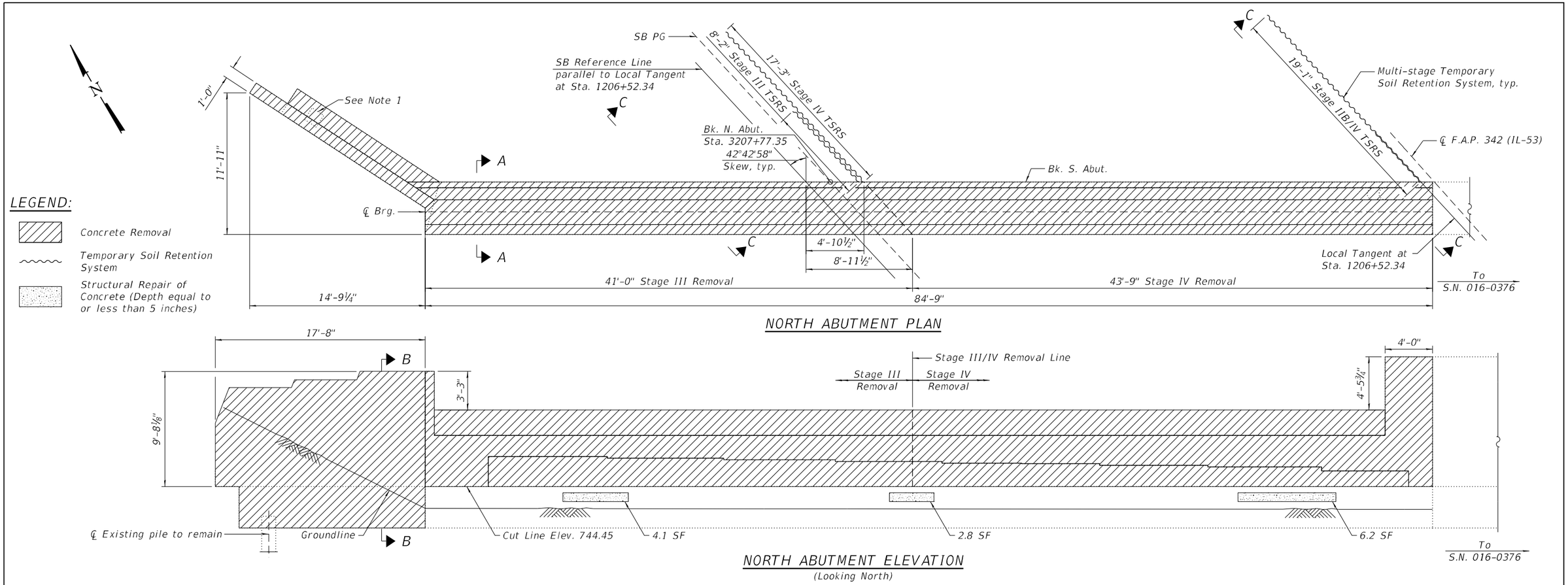

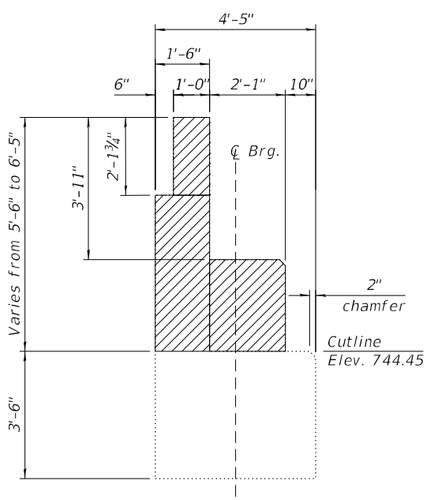

SECTION A-A

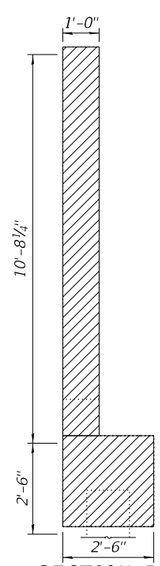

SECTION B-B

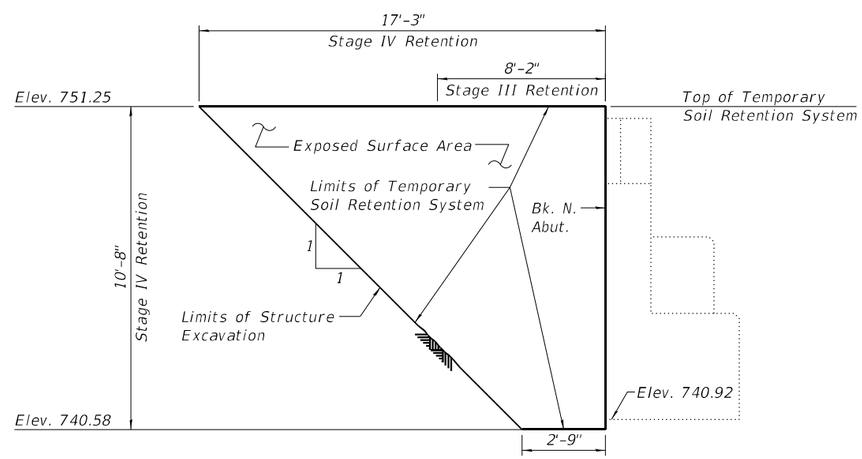

SECTION C-C - TEMPORARY SOIL RETENTION SYSTEM

BILL OF MATERIALS

Item	Unit	Total
Concrete Removal	CU YD	49.2
Temporary Soil Retention System	SQ FT	164
Structural Repair of Concrete (Depth Equal to or Less Than 5 Inches)	SQ FT	14

Notes:

1. Contractor to take care not to damage pile or pile anchorage during Concrete Removal.
2. The elevations and dimensions shown are calculated based on existing plans and field measurements. The Contractor shall verify in field and make necessary approved adjustments prior to removal, repairs, or ordering of materials. For additional information, see Existing Drawings.
3. A cantilevered sheet piling design does not appear feasible and additional members or other retention systems may be necessary. The Contractor shall submit a Temporary Soil Retention System design including plan details and calculations for review and acceptance by the Engineer.
4. Specified Temporary Soil Retention System will be used for 2 separate construction stages due to necessary modifications required between stages.
5. For Offset sketch, see sheet 2 of 66.

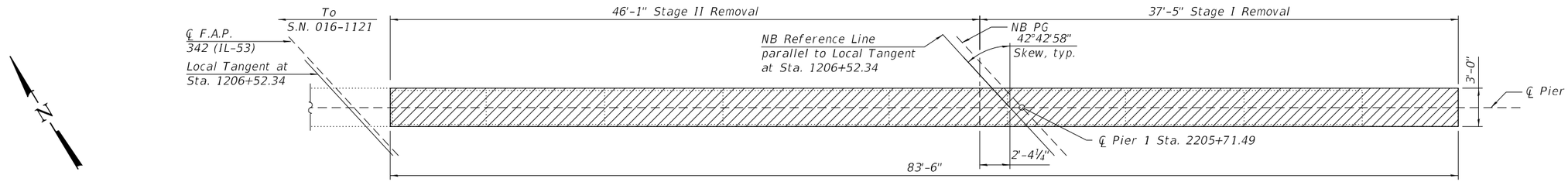

PIER 1 PLAN

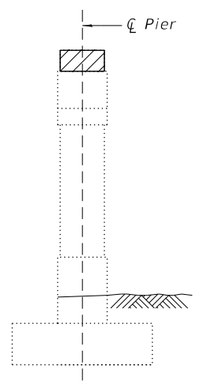

PIER 1 EAST ELEVATION
(Looking West)

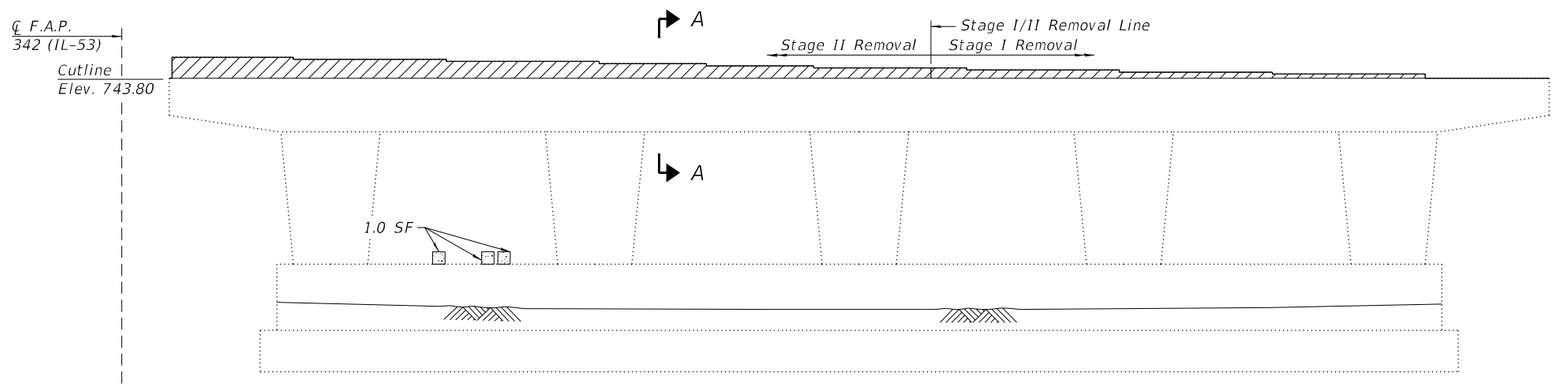

PIER 1 SOUTH ELEVATION
(Looking North)

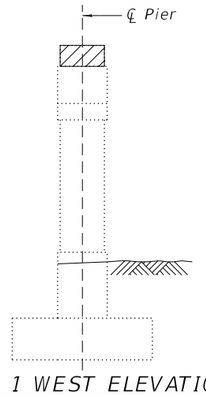

PIER 1 WEST ELEVATION
(Looking East)

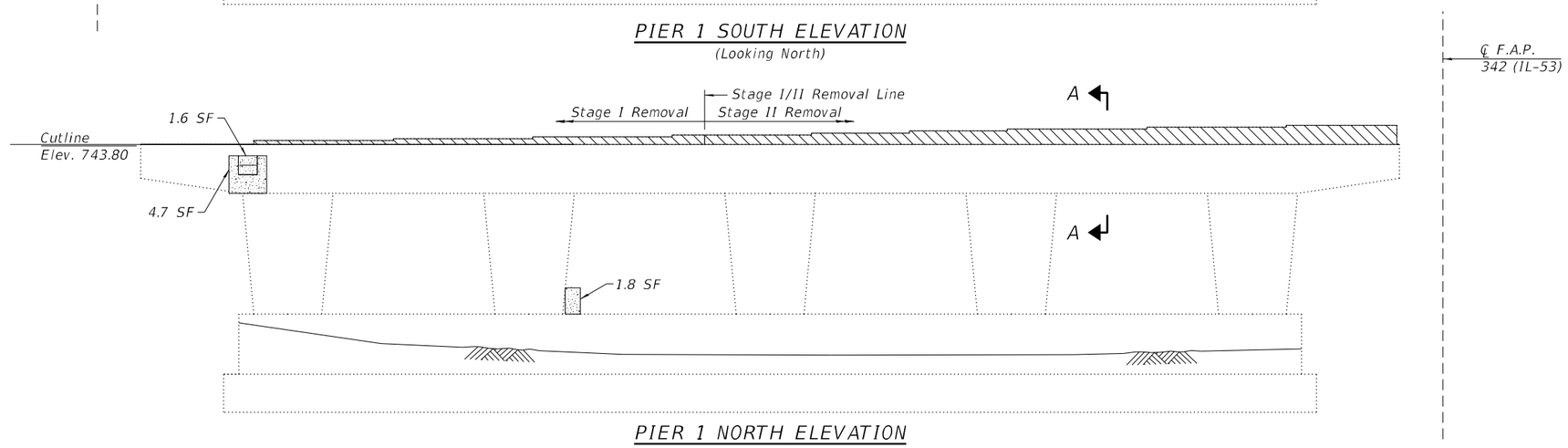

PIER 1 NORTH ELEVATION
(Looking South)

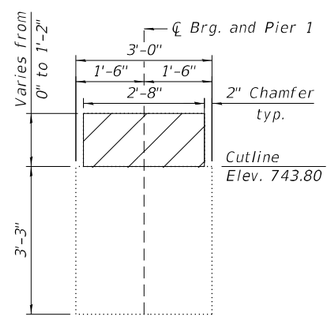

SECTION A-A

LEGEND:

- Concrete Removal
- Structural Repair of Concrete (Depth equal to or less than 5 inches)
- Structural Repair of Concrete (Depth greater than 5 inches)

BILL OF MATERIAL

Item	Unit	Total
Concrete Removal	CU YD	4.0
Structural Repair of Concrete (Depth Equal to or Less Than 5 Inches)	SQ FT	10
Structural Repair of Concrete (Depth Greater Than 5 Inches)	SQ FT	2

Notes:
1. The elevations and dimensions are calculated based on existing plans and field measurements. The Contractor shall verify in field and make necessary approved adjustments prior to removal repairs or ordering of materials. For additional information, see Existing Drawings.
2. For Offset sketch, see sheet 2 or 66.

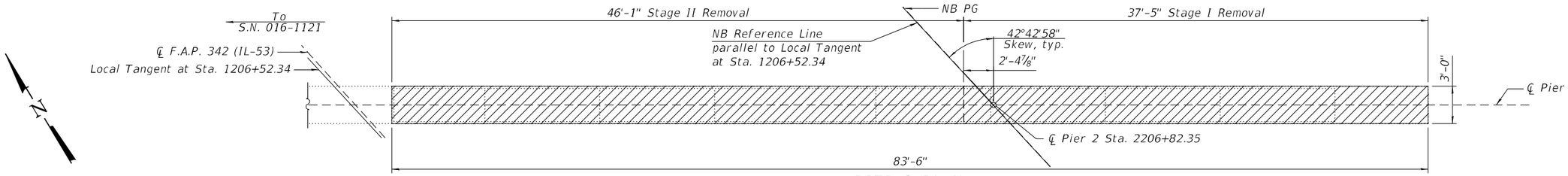

PIER 2 PLAN

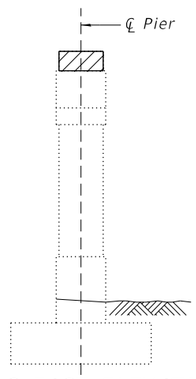

PIER 2 EAST ELEVATION
(Looking West)

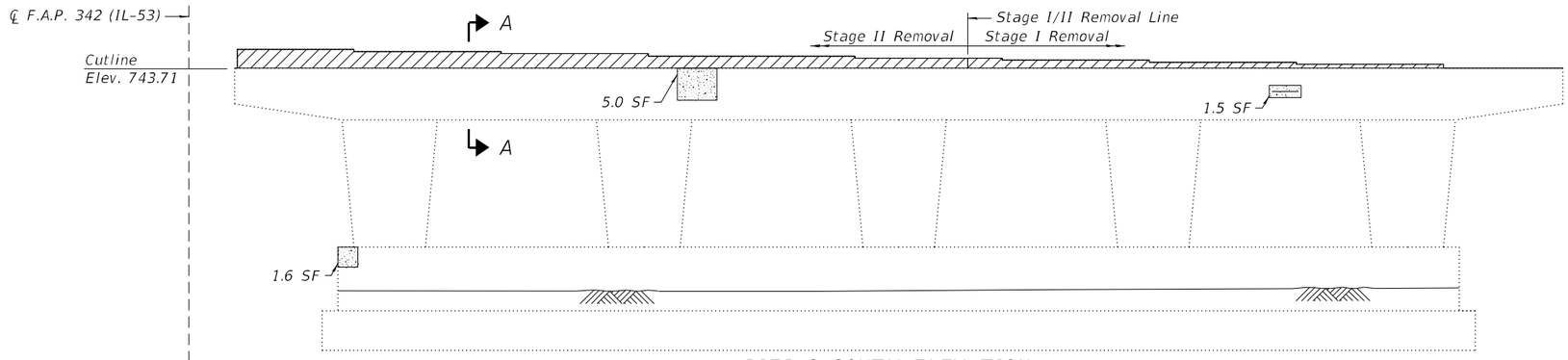

PIER 2 SOUTH ELEVATION
(Looking North)

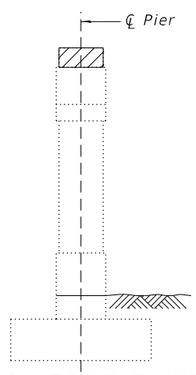

PIER 2 WEST ELEVATION
(Looking East)

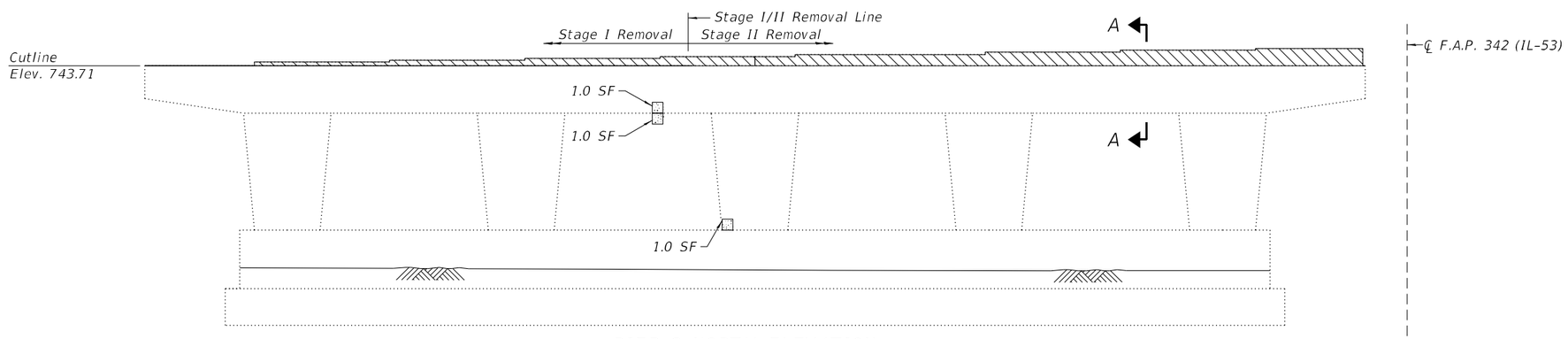

PIER 2 NORTH ELEVATION
(Looking South)

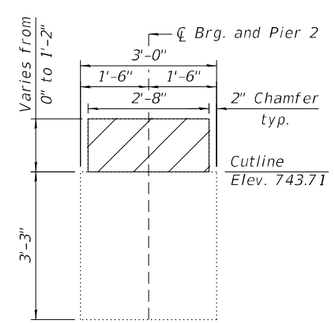

SECTION A-A

LEGEND:

- Concrete Removal
- Structural Repair of Concrete (Depth equal to or less than 5 inches)
- Structural Repair of Concrete (Depth greater than 5 inches)

BILL OF MATERIAL

Item	Unit	Total
Concrete Removal	CU YD	4.1
Structural Repair of Concrete (Depth Equal to or Less Than 5 Inches)	SQ FT	10
Structural Repair of Concrete (Depth Greater Than 5 Inches)	SQ FT	2

Notes:

1. The elevations and dimensions are calculated based on existing plans and field measurements. The Contractor shall verify in field and make necessary approved adjustments prior to removal repairs or ordering of materials. For additional information, see Existing Drawings.
2. For Offset sketch, see sheet 2 or 66.

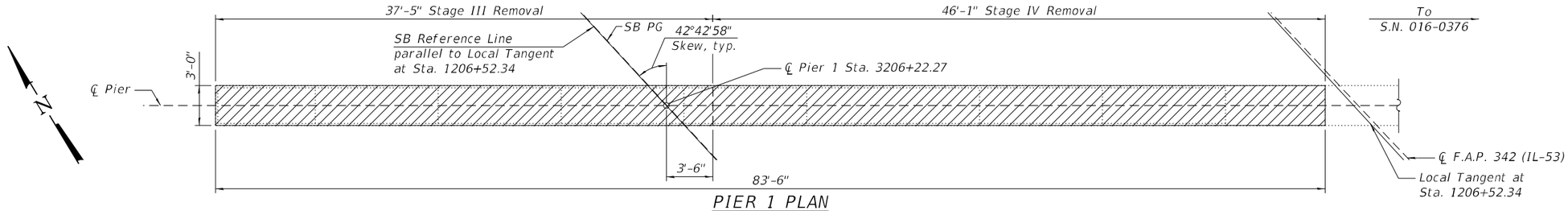

PIER 1 PLAN

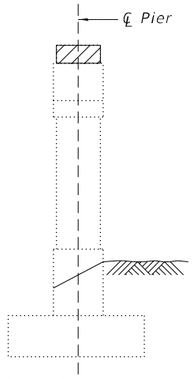

PIER 1 EAST ELEVATION
(Looking West)

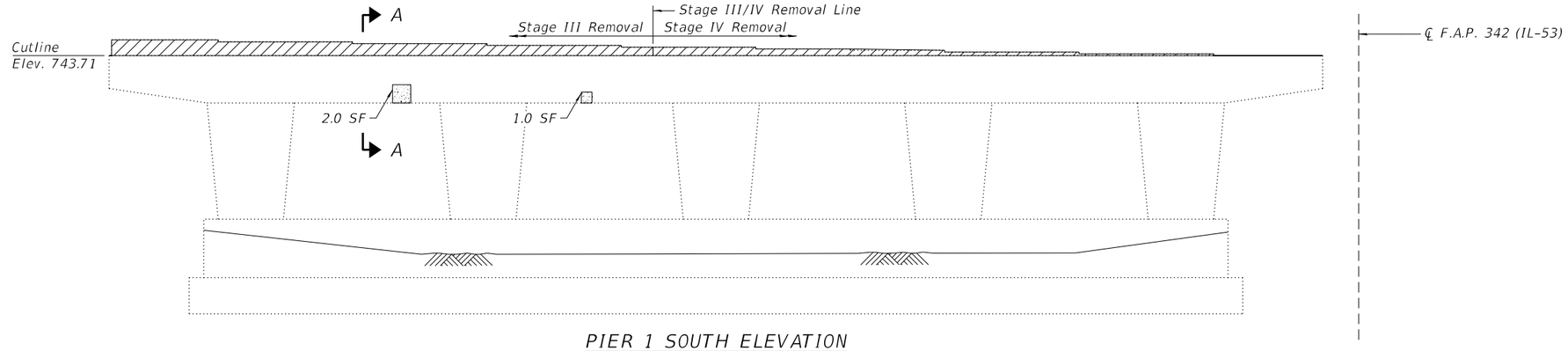

PIER 1 SOUTH ELEVATION
(Looking North)

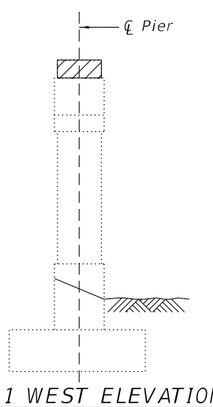

PIER 1 WEST ELEVATION
(Looking East)

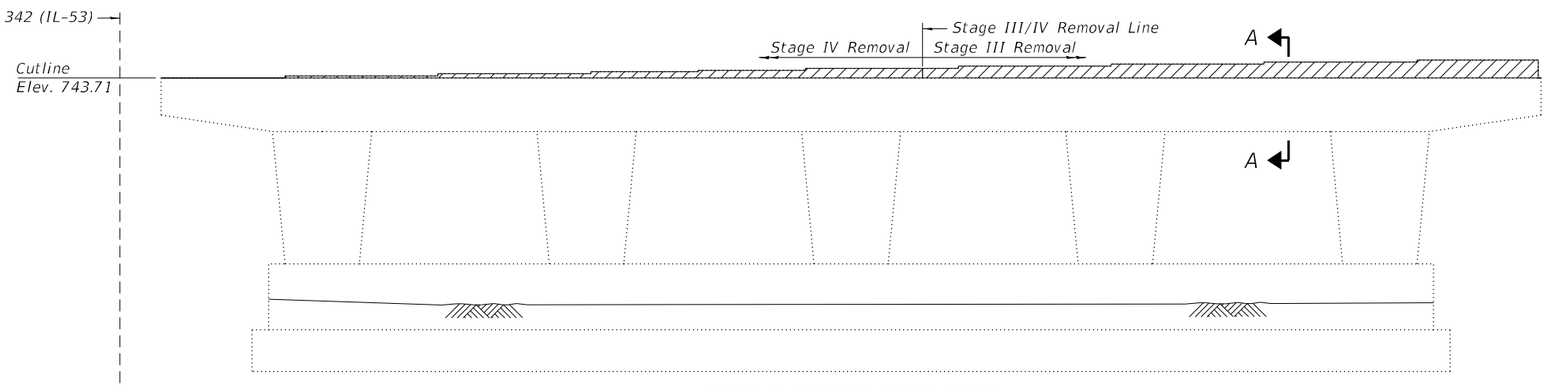

PIER 1 NORTH ELEVATION
(Looking South)

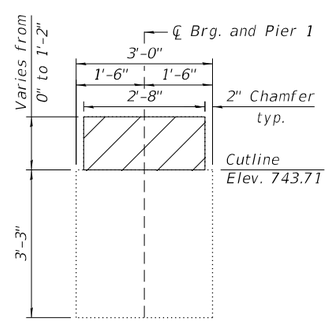

SECTION A-A

BILL OF MATERIAL

Item	Unit	Total
Concrete Removal	CU YD	4.9
Structural Repair of Concrete (Depth Equal to or Less Than 5 Inches)	SQ FT	3

LEGEND:

Concrete Removal

Structural Repair of Concrete
(Depth equal to or less than 5 inches)

Notes:
1. The elevations and dimensions are calculated based on existing plans and field measurements. The Contractor shall verify in field and make necessary approved adjustments prior to removal repairs or ordering of materials. For additional information, see Existing Drawings.
2. For Offset sketch, see sheet 2 or 66.

MODEL: Default
FILE NAME: S:\IOL\6300-6399\6346\113\Drawings\CAD\Micro-SS4\CAD_Sheets\01603761121-C3-049-CRSPIER1-SAI.dgn

STRAND ASSOCIATES
1170 SOUTH HOUBOLT ROAD
JOLIET, ILLINOIS 60431
(815) 744-4200
IDFPR NO. 184-001273

USER NAME = codyh	DESIGNED - BRL	REVISED -	
	CHECKED - NDR	REVISED -	
PLOT SCALE = 0:2.0000 ':" / in.	DRAWN - CJH	REVISED -	
PLOT DATE = 9/20/2024	CHECKED - NDR	REVISED -	

STATE OF ILLINOIS
DEPARTMENT OF TRANSPORTATION

PIER 1 REMOVAL AND REPAIRS
STRUCTURE NO. 016-1121 (SB)

SHEET 49 OF 66 SHEETS

F.A.P. RTE.	SECTION	COUNTY	TOTAL SHEETS	SHEET NO.
342	(531) BR 23	COOK	1211	734
		CONTRACT NO. 62W38		
	ILLINOIS	FED. AID PROJECT		

9/20/2024 3:12:15 PM

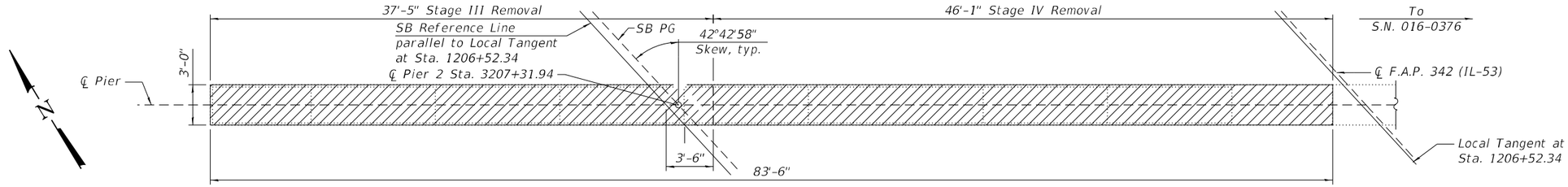

PIER 2 PLAN

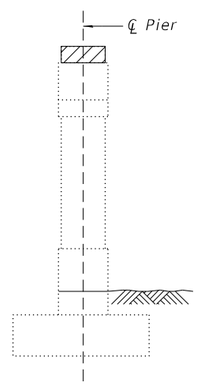

PIER 2 EAST ELEVATION

(Looking West)

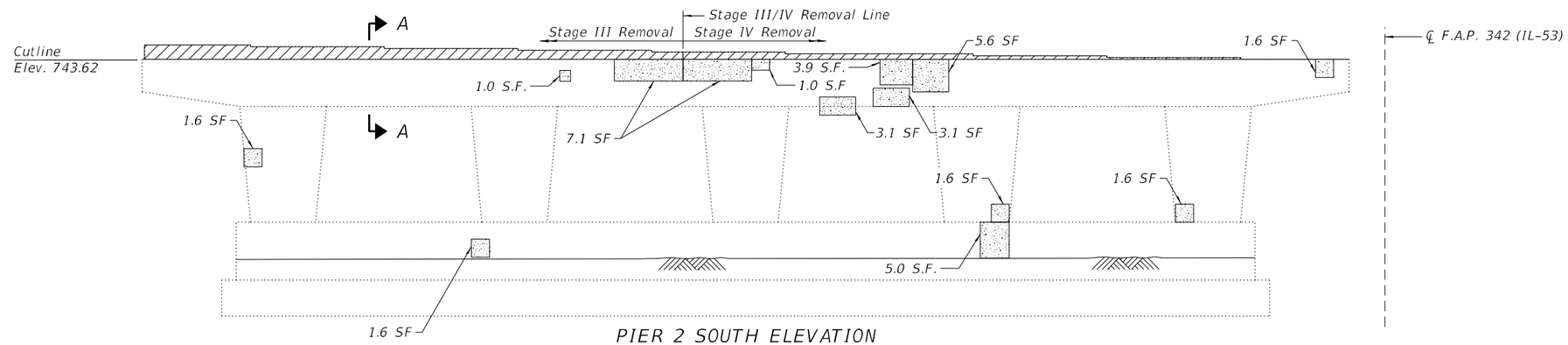

PIER 2 SOUTH ELEVATION

(Looking North)

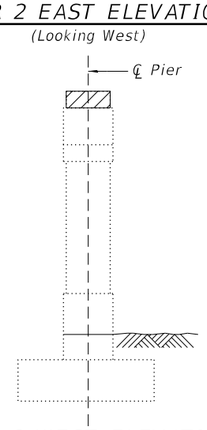

PIER 2 WEST ELEVATION

(Looking East)

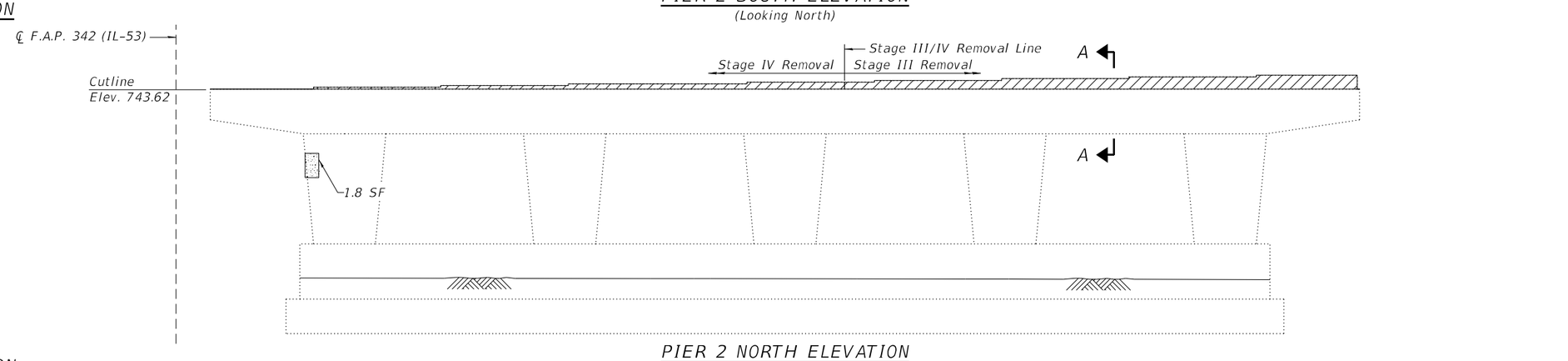

PIER 2 NORTH ELEVATION

(Looking South)

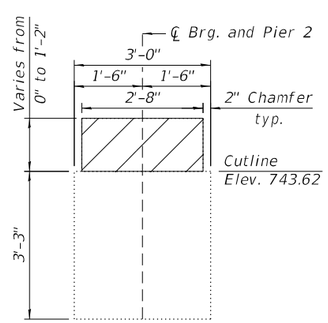

SECTION A-A

LEGEND:

- Concrete Removal
- Structural Repair of Concrete (Depth equal to or less than 5 inches)

BILL OF MATERIAL

Item	Unit	Total
Concrete Removal	CU YD	3.8
Structural Repair of Concrete (Depth Equal to or Less Than 5 Inches)	SQ FT	47

Notes:

1. The elevations and dimensions are calculated based on existing plans and field measurements. The Contractor shall verify in field and make necessary approved adjustments prior to removal repairs or ordering of materials. For additional information, see Existing Drawings.
2. For Offset sketch, see sheet 2 or 66.

MODEL: Default
FILE NAME: S:\OL\6300--639\63461\13\Drawings\CAD\Micro-SSA\CAD_Sheets\0160376112 1-C3-0504-CRSPIER2-SA1.dgn

STRAND ASSOCIATES
1170 SOUTH HOUBOLT ROAD
JOLIET, ILLINOIS 60431
(815) 744-4200
IDFPR NO. 184-001273

USER NAME = codyh	DESIGNED - BRL	REVISED -	
	CHECKED - NDR	REVISED -	
PLOT SCALE = 0:2.0000 ':" / in.	DRAWN - CJH	REVISED -	
PLOT DATE = 9/20/2024	CHECKED - NDR	REVISED -	

STATE OF ILLINOIS
DEPARTMENT OF TRANSPORTATION

PIER 2 REMOVAL AND REPAIRS
STRUCTURE NO. 016-1121 (SB)

SHEET 50 OF 66 SHEETS

F.A.P. RTE.	SECTION	COUNTY	TOTAL SHEETS	SHEET NO.
342	(531) BR 23	COOK	1211	735
		CONTRACT NO. 62W38		
		ILLINOIS	FED. AID PROJECT	

9/20/2024 3:12:17 PM

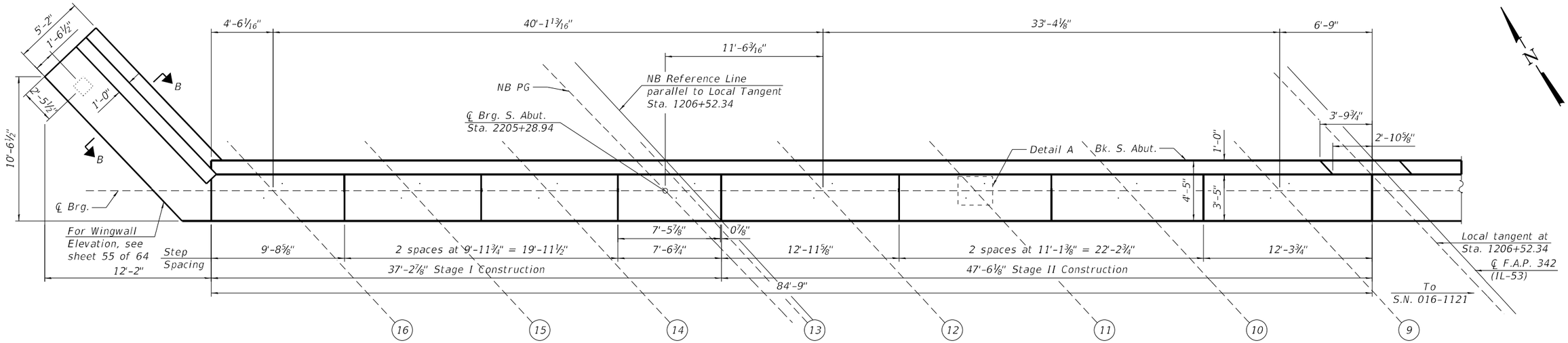

SOUTH ABUTMENT PLAN

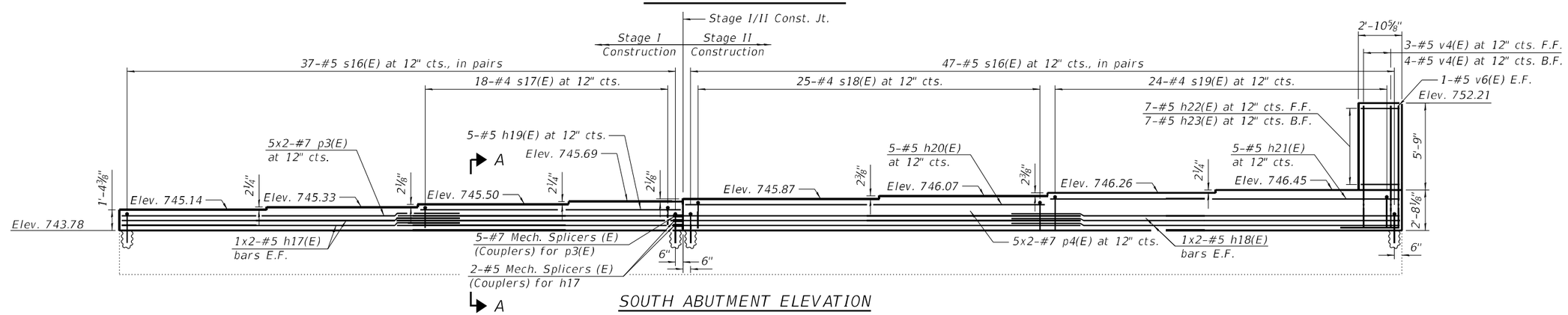

SOUTH ABUTMENT ELEVATION

(Looking South)

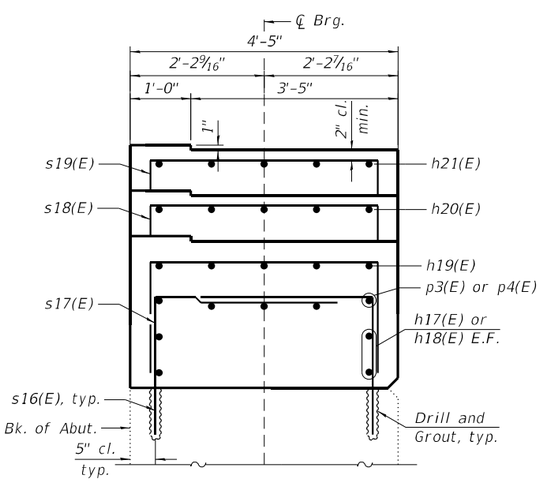

SECTION A-A

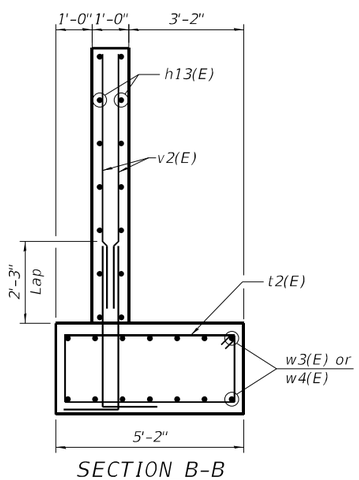

SECTION B-B

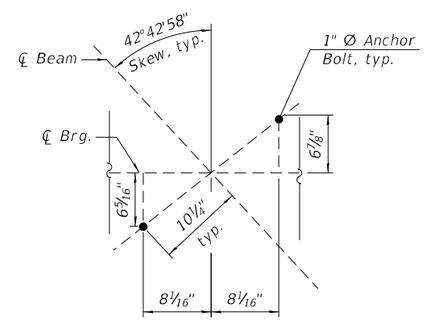

ANCHOR BOLT LOCATION PLAN
DETAIL A

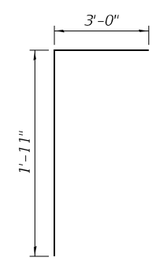

BAR s16(E)

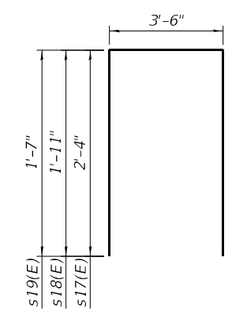

BAR s17(E)-s19(E)

Notes:

1. Cost of drilling and grouting reinforcing bars included in cost of Concrete Structures.
2. Bars shall be drilled and set according to Article 584 of the Standard Specifications. Bars shall have a 9" minimum embedment depth.
3. Bars indicated thus 2x3-#5 etc. indicates 2 lines of bars with 3 lengths per line.
4. All construction joints between new and existing concrete shall be Bonded Construction Joints.
5. See sheet 27 of 66 for drainage details behind abutments.

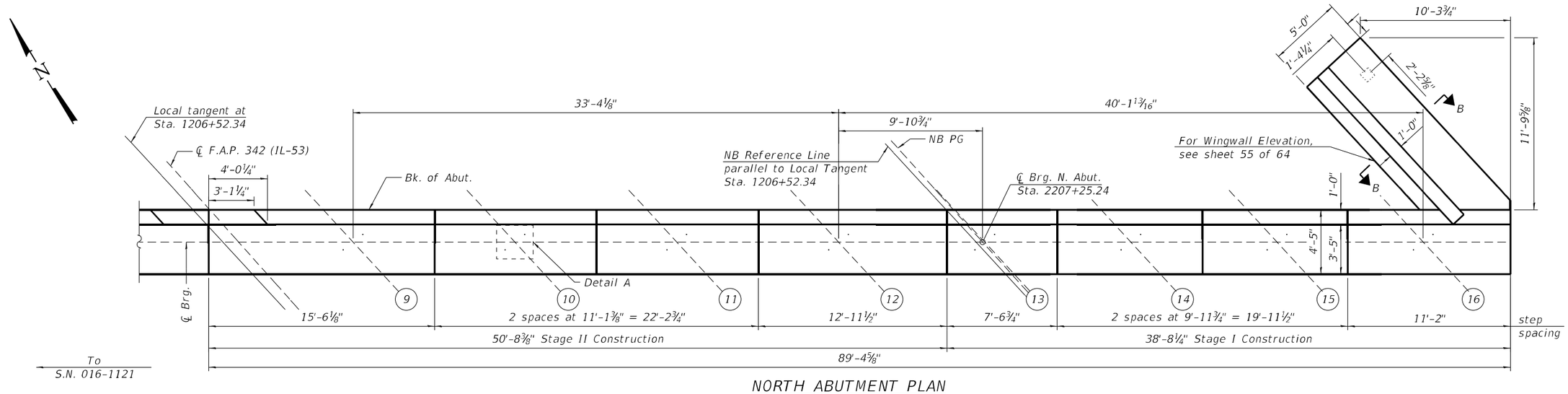

NORTH ABUTMENT PLAN

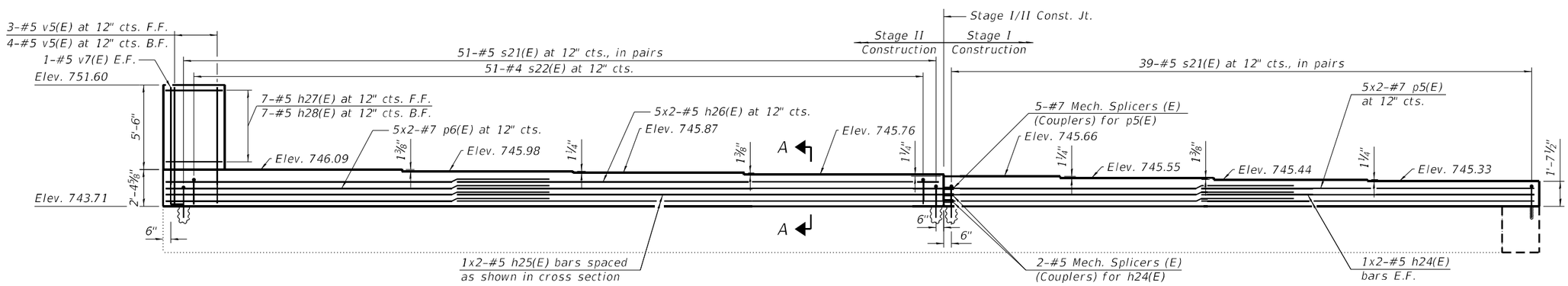

NORTH ABUTMENT ELEVATION

(Looking South)

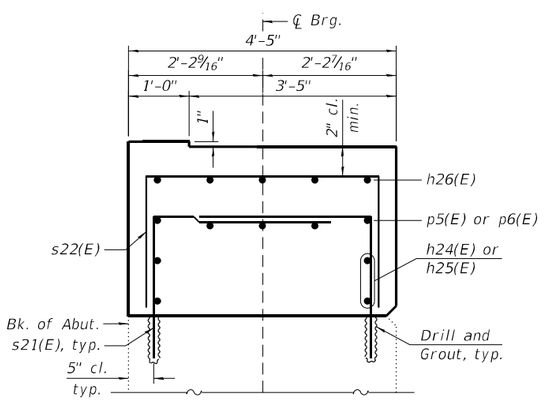

SECTION A-A

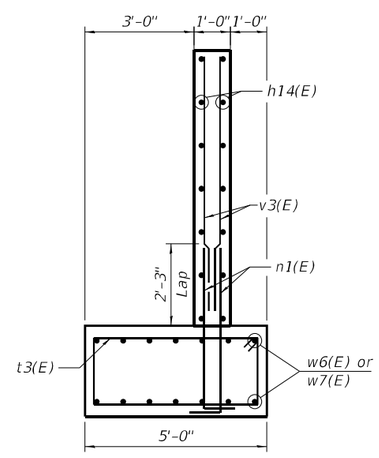

SECTION B-B

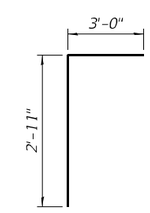

BARS s21(E)

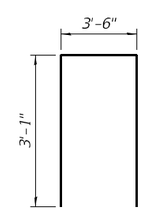

BARS s22(E)

Notes:

1. Cost of drilling and grouting reinforcing bars included in cost for Concrete Structures.
2. Bars shall be drilled and set according to Article 584 of the Standard Specifications. Bars shall have a 9" minimum embedment depth.
3. Bars indicated thus 2x3-#5 etc. indicates 2 lines of bars with 3 lengths per line.
4. All construction joints between new and existing concrete shall be Bonded Construction Joints.
5. See sheet 28 of 66 for drainage details behind abutments.
6. See sheet 51 of 66 for Detail A.

STRAND ASSOCIATES®
1170 SOUTH HOUBOLT ROAD
JOLIET, ILLINOIS 60431
(815) 744-4200
IDFPR NO. 184-001273

USER NAME = codyh	DESIGNED - ELR	REVISED -	
	CHECKED - NDR	REVISED -	
PLOT SCALE = 0:2.0000 ':" / in.	DRAWN - CJH	REVISED -	
PLOT DATE = 9/20/2024	CHECKED - NDR	REVISED -	

STATE OF ILLINOIS
DEPARTMENT OF TRANSPORTATION

ABUTMENT PLAN AND ELEVATION (2 OF 2)
STRUCTURE NO. 016-0376 (NB)

SHEET 52 OF 66 SHEETS

F.A.P. RTE.	SECTION	COUNTY	TOTAL SHEETS	SHEET NO.
342	(531) BR 23	COOK	1211	737
		CONTRACT NO. 62W38		
		ILLINOIS	FED. AID PROJECT	

MODEL: Default
FILE NAME: S:\IDOL\6300-6399\6346\113\Drawings\CAD\Micros-SSA\CAD_Sheets\0160376112I-C3-052-APE2-SA1.dgn
9/20/2024 3:12:20 PM

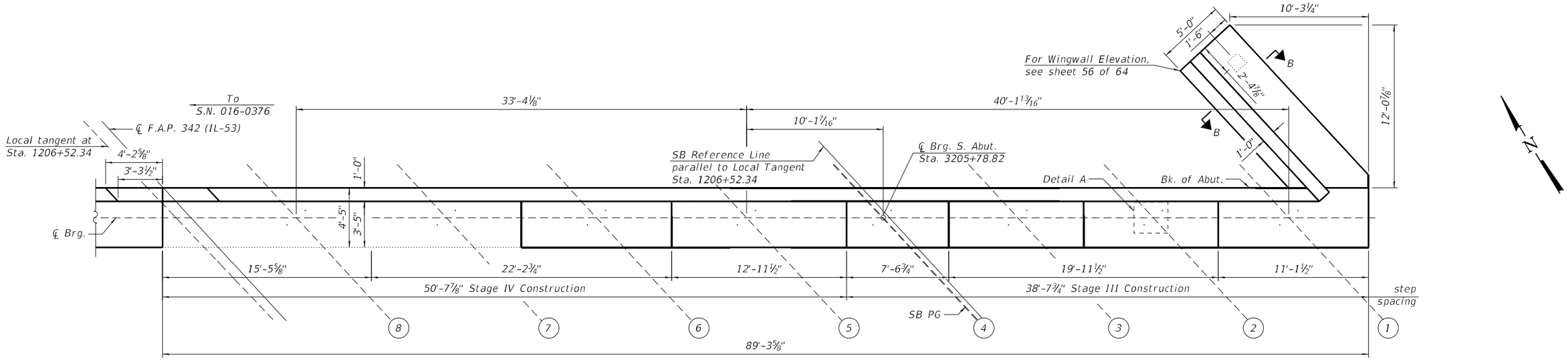

SOUTH ABUTMENT PLAN

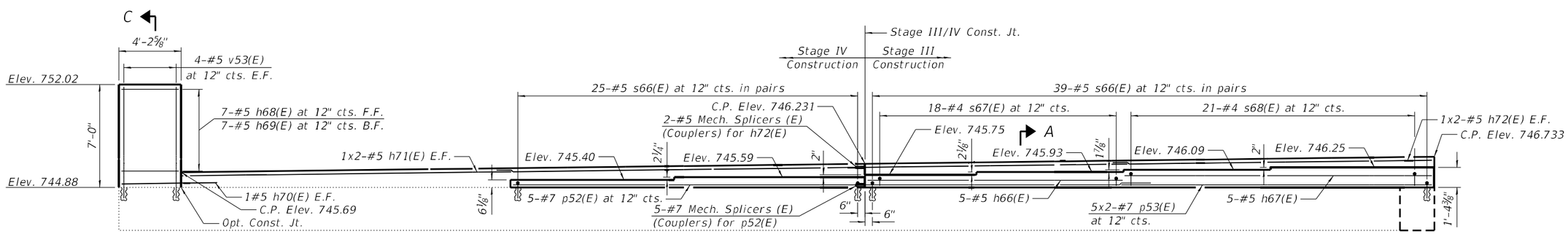

SOUTH ABUTMENT ELEVATION

(Looking North)

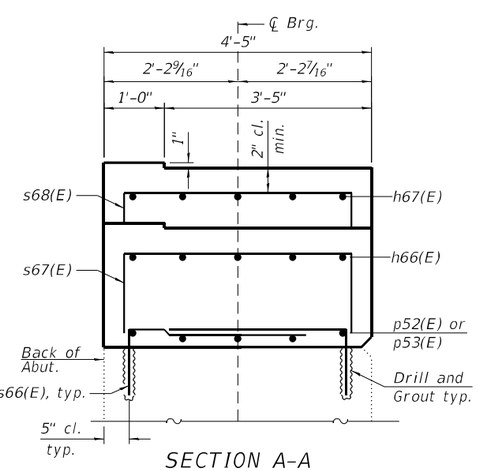

SECTION A-A

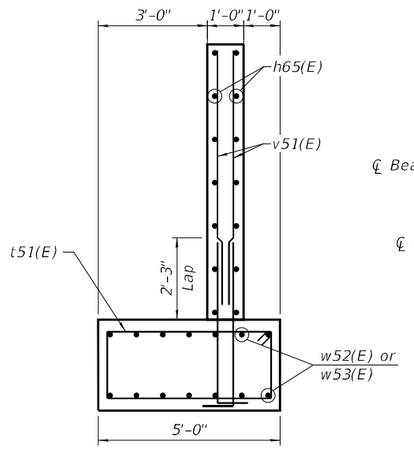

SECTION B-B

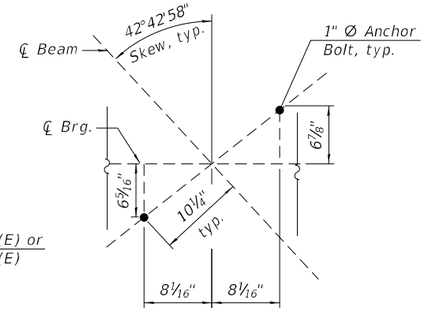

ANCHOR BOLT LOCATION PLAN
DETAIL A

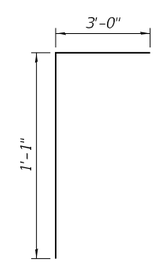

BAR s66(E)

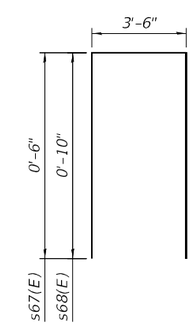

BARS s67(E)
AND s68(E)

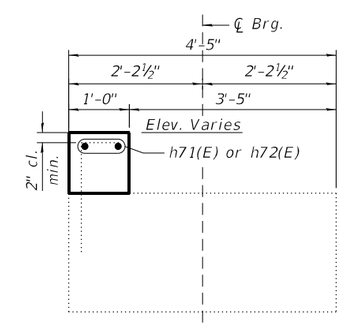

SECTION C-C

Notes:

1. Cost of drilling and grouting reinforcing bars included in cost of Concrete Structures.
2. Bars shall be drilled and set according to Article 584 of the Standard Specifications. Bars shall have a 9" minimum embedment depth.
3. Bars indicated thus 2x3-#5 etc. indicates 2 lines of bars with 3 lengths per line.
4. All construction joints between new and existing concrete shall be Bonded Construction Joints.
5. See sheet 27 of 66 for drainage details behind abutments.

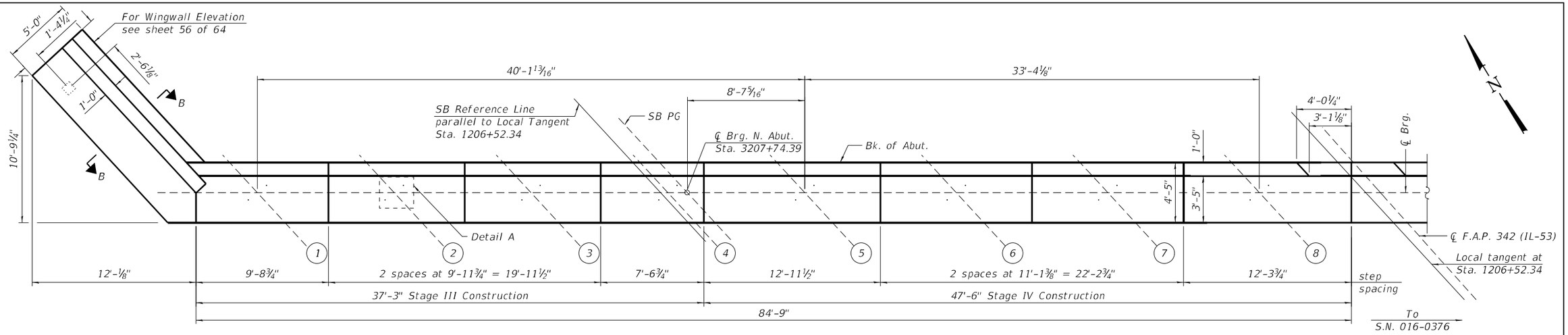

NORTH ABUTMENT PLAN

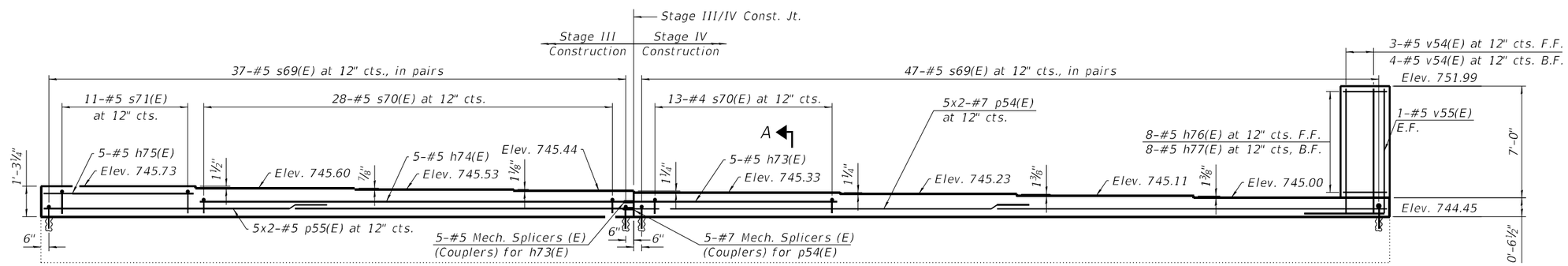

NORTH ABUTMENT ELEVATION

(Looking North)

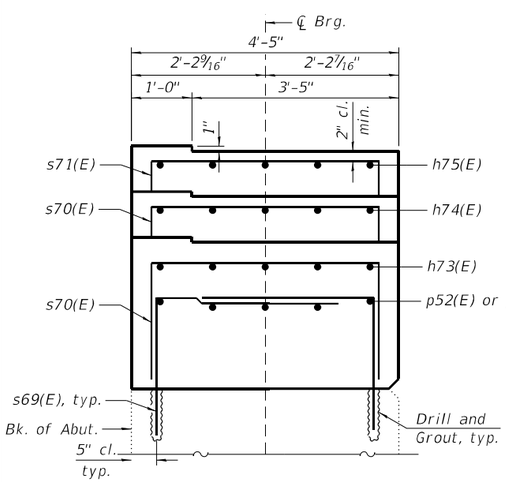

SECTION A-A

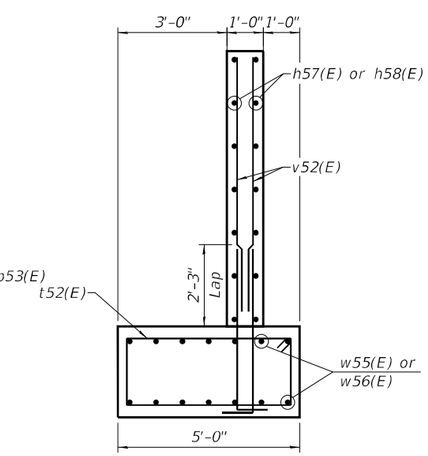

SECTION B-B

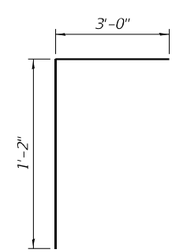

BARS s69(E)

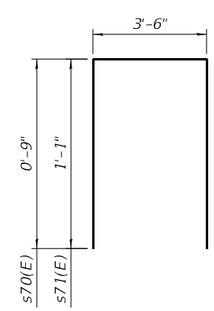

BARS s70(E) AND s71(E)

Notes:

1. Cost of drilling and grouting reinforcing bars included in cost for Concrete Structures.
2. Bars shall be drilled and set according to Article 584 of the Standard Specifications. Bars shall have a 9" minimum embedment depth.
3. Bars indicated thus 2x3-#5 etc. indicates 2 lines of bars with 3 lengths per line.
4. All construction joints between new and existing concrete shall be Bonded Construction Joints.
5. See sheet 28 of 66 for drainage details behind abutments.
6. See sheet 53 of 66 for Detail A.

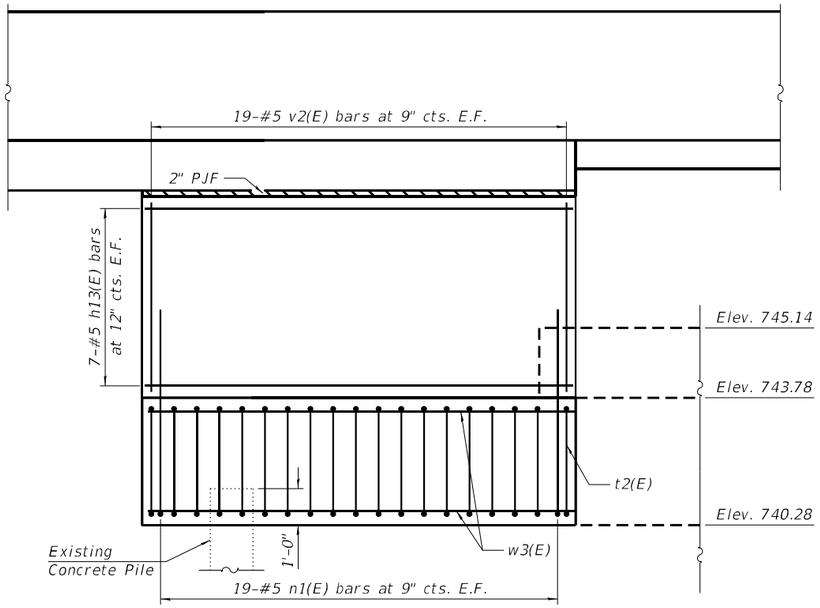

NB SOUTH WING ELEVATION

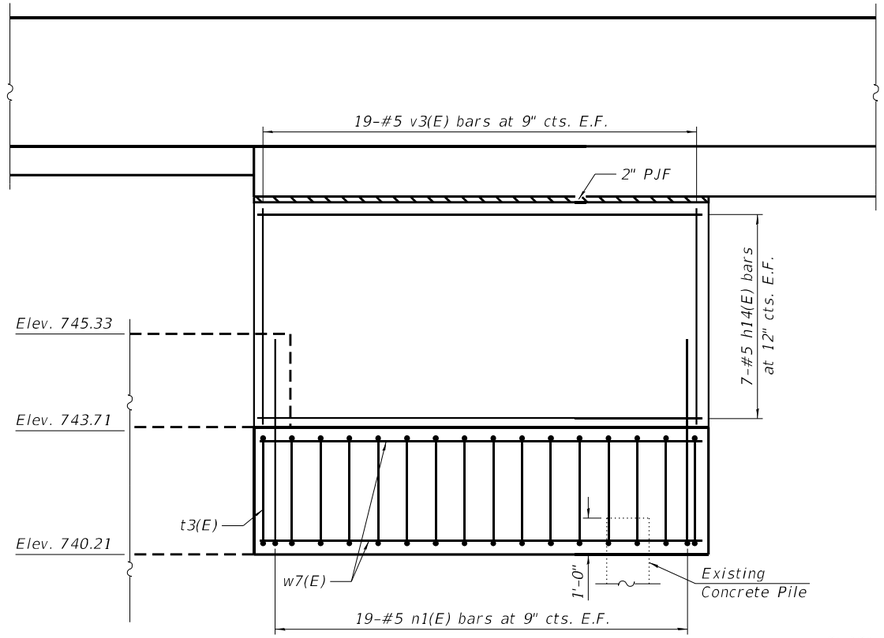

NB NORTH WING ELEVATION

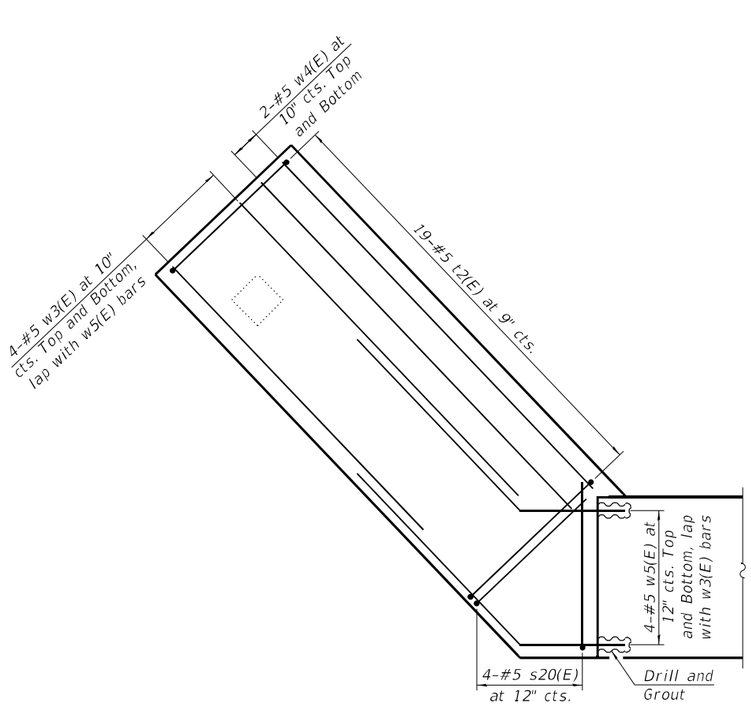

NB SOUTH WINGWALL FOOTING PLAN

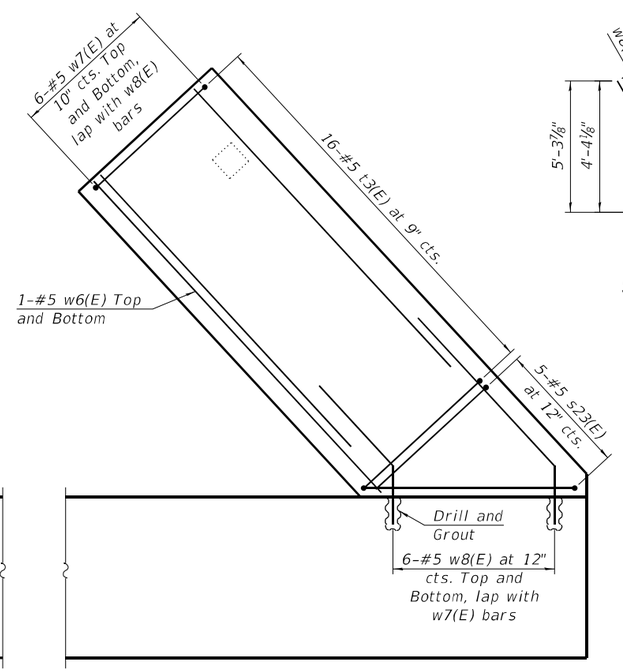

NB NORTH WINGWALL FOOTING PLAN

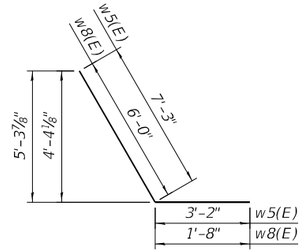

BARS w5(E), w8(E)

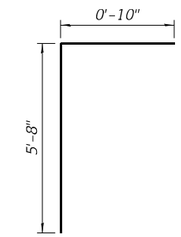

BAR n1(E)

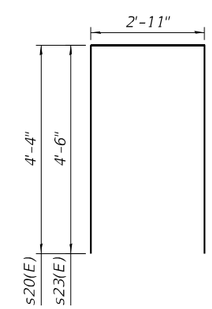

BARS s20(E), s23(E)

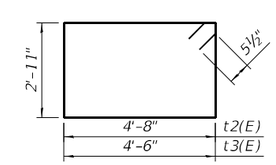

BARS t2(E), t3(E)

BILL OF MATERIALS

(South Abutment)

Bar	No.	Size	Length	Shape
h13(E)	12	#5	13'-6"	
h17(E)	8	#5	19'-10"	
h18(E)	8	#5	25'-0"	
h19(E)	5	#5	17'-3"	
h20(E)	5	#5	23'-9"	
h21(E)	5	#5	23'-1"	
h22(E)	7	#5	2'-9"	
h23(E)	7	#5	3'-4"	
n1(E)	38	#5	6'-6"	
p3(E)	10	#7	20'-5"	
p4(E)	10	#7	25'-7"	
s16(E)	168	#5	4'-11"	
s17(E)	36	#4	6'-8"	
s18(E)	50	#4	7'-4"	
s19(E)	48	#4	8'-2"	
s20(E)	4	#5	11'-7"	
t2(E)	19	#5	16'-1"	
v2(E)	38	#5	4'-11"	
v4(E)	7	#5	8'-1"	
v6(E)	2	#5	8'-11"	
w3(E)	8	#5	11'-0"	
w4(E)	4	#5	12'-8"	
w5(E)	8	#5	9'-2"	
Concrete Structures			CU YD	41.7
Reinforcement Bars, Epoxy Coated			POUND	3,330
Mechanical Splicers			EACH	9

(North Abutment)

Bar	No.	Size	Length	Shape
h14(E)	14	#5	13'-5"	
h24(E)	8	#5	20'-7"	
h25(E)	8	#5	26'-7"	
h26(E)	5	#5	26'-8"	
h27(E)	7	#5	3'-6"	
h28(E)	7	#5	2'-11"	
n1(E)	38	#5	5'-2"	
p5(E)	10	#7	21'-2"	
p6(E)	10	#7	27'-2"	
s21(E)	180	#5	5'-11"	
s22(E)	102	#4	9'-7"	
s23(E)	5	#5	11'-11"	
t3(E)	16	#5	15'-8"	
v3(E)	38	#5	5'-4"	
v5(E)	7	#5	7'-7"	
v7(E)	2	#5	8'-5"	
w7(E)	2	#5	10'-11"	
w8(E)	12	#5	10'-6"	
w9(E)	12	#5	8'-11"	
Concrete Structures			CU YD	41.7
Reinforcement Bars, Epoxy Coated			POUND	4,650
Mechanical Splicers			EACH	9

MODEL: Default
FILE NAME: S:\OL\6300-6399\6346113\Drawings\CAD\Micro-SSA\CAD_Sheets\0160376112I-C3-055-NWWPE1-SA1.dgn

STRAND ASSOCIATES®
1170 SOUTH HOUBOLT ROAD
JOLIET, ILLINOIS 60431
(815) 744-4200
IDFPR NO. 184-001273

USER NAME = codyh	DESIGNED - ELR	REVISED -	
	CHECKED - NDR	REVISED -	
PLOT SCALE = 0:2.0000 ':" / in.	DRAWN - CJH	REVISED -	
PLOT DATE = 9/20/2024	CHECKED - NDR	REVISED -	

STATE OF ILLINOIS
DEPARTMENT OF TRANSPORTATION

WING WALL PLAN AND ELEVATION
STRUCTURE NO. 016-0376 (NB)

SHEET 55 OF 66 SHEETS

F.A.P. RTE.	SECTION	COUNTY	TOTAL SHEETS	SHEET NO.
342	(531) BR 23	COOK	1211	740
		CONTRACT NO. 62W38		
	ILLINOIS	FED. AID PROJECT		

9/20/2024 3:12:27 PM

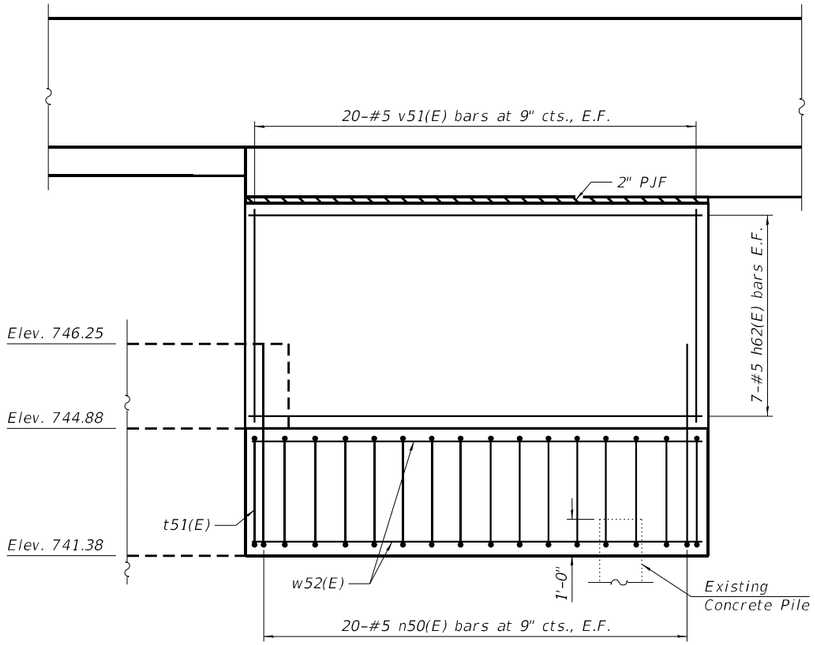

SB SOUTH WING ELEVATION

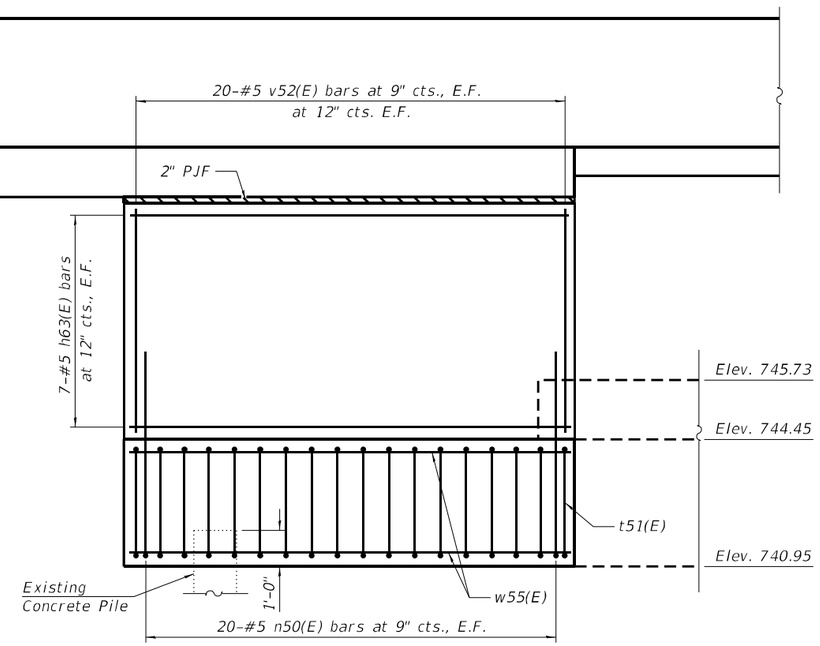

SB NORTH WING ELEVATION

BILL OF MATERIALS

(South Abutment)

Bar	No.	Size	Length	Shape
h62(E)	14	#5	12'-4"	
h66(E)	5	#5	17'-2"	
h67(E)	5	#5	20'-9"	
h68(E)	7	#5	3'-9"	
h69(E)	7	#5	3'-2"	
h70(E)	2	#5	7'-2"	
h71(E)	4	#5	25'-0"	
h72(E)	2	#5	20'-7"	
n50(E)	40	#5	5'-2"	
p52(E)	5	#7	23'-9"	
p53(E)	10	#7	21'-1"	
s65(E)	6	#5	10'-11"	
s66(E)	128	#5	4'-1"	
s67(E)	18	#4	4'-7"	
s68(E)	21	#4	5'-3"	
t51(E)	16	#5	15'-9"	
v51(E)	40	#5	5'-8"	
v53(E)	9	#5	7'-9"	
w52(E)	12	#5	10'-6"	
w53(E)	2	#5	11'-3"	
w54(E)	12	#5	9'-1"	
Concrete Structures			CU YD	23.6
Reinforcement Bars, Epoxy Coated			POUND	3,120
Mechanical Splicers			EACH	7
Cleaning Bridge Seats			SQ FT	129

(North Abutment)

Bar	No.	Size	Length	Shape
h63(E)	14	#5	14'-2"	
h73(E)	5	#5	13'-0"	
h74(E)	5	#5	27'-6"	
h75(E)	5	#5	9'-5"	
h76(E)	8	#5	2'-11"	
h77(E)	8	#5	3'-6"	
n50(E)	40	#5	5'-0"	
p54(E)	10	#7	25'-7"	
p55(E)	10	#7	20'-2"	
s69(E)	168	#5	4'-2"	
s70(E)	28	#4	4'-11"	
s71(E)	11	#4	5'-9"	
s72(E)	4	#5	12'-9"	
t51(E)	18	#5	15'-9"	
v52(E)	40	#5	6'-9"	
v54(E)	7	#5	7'-3"	
v55(E)	2	#5	8'-1"	
w55(E)	8	#5	10'-11"	
w56(E)	6	#5	12'-0"	
w57(E)	8	#5	9'-7"	
Concrete Structures			CU YD	25.2
Reinforcement Bars, Epoxy Coated			POUND	3,530
Mechanical Splicers			EACH	10

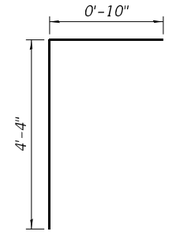

BAR n50(E)

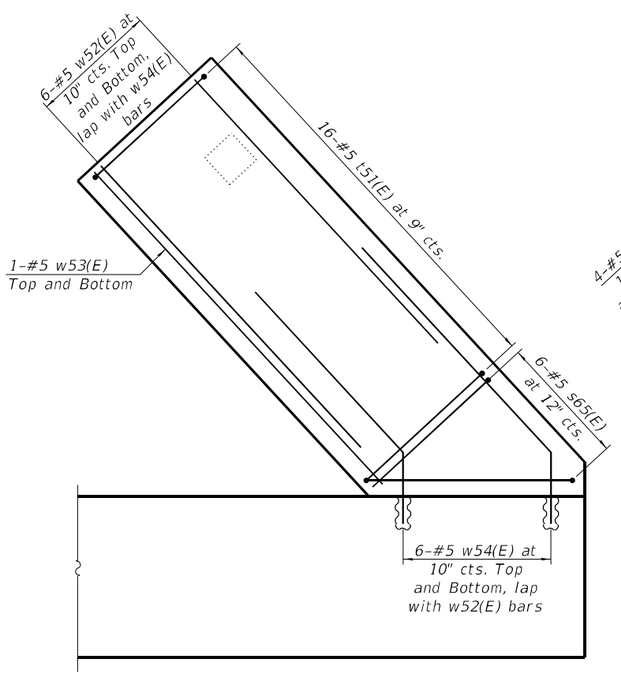

SB SOUTH WINGWALL PLAN

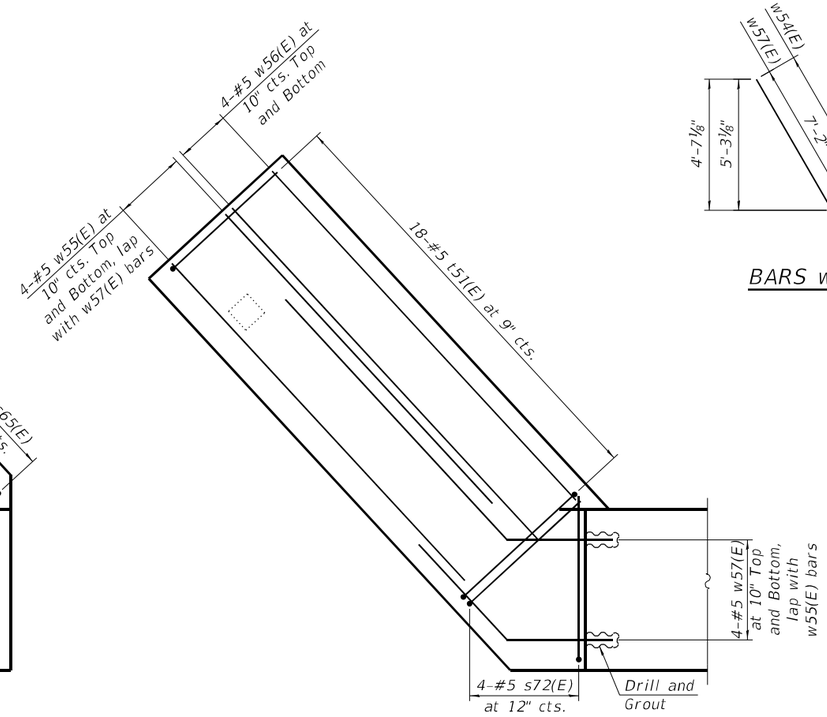

SB NORTH WINGWALL PLAN

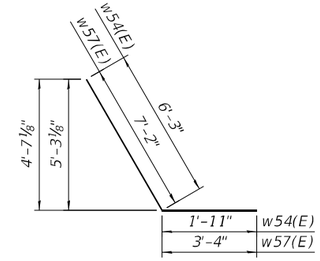

BARS w54(E), w57(E)

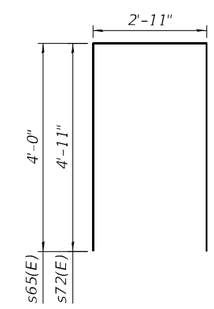

BARS s65(E), s72(E)

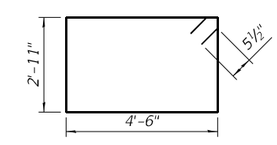

BARS t3(E)

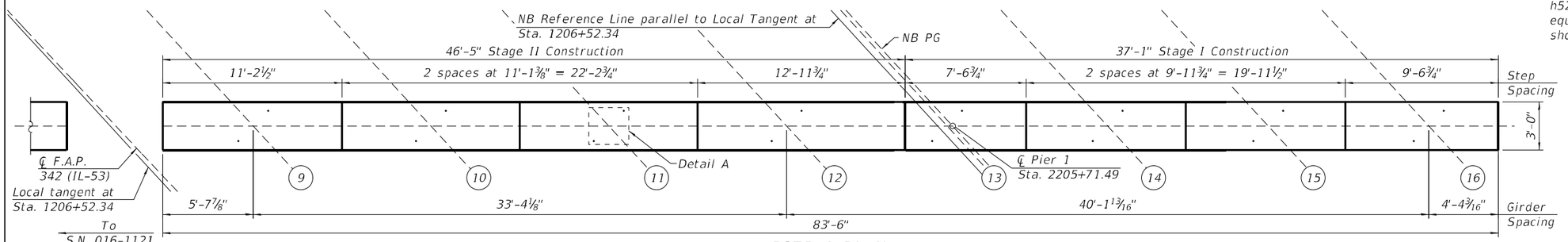

PIER 1 PLAN

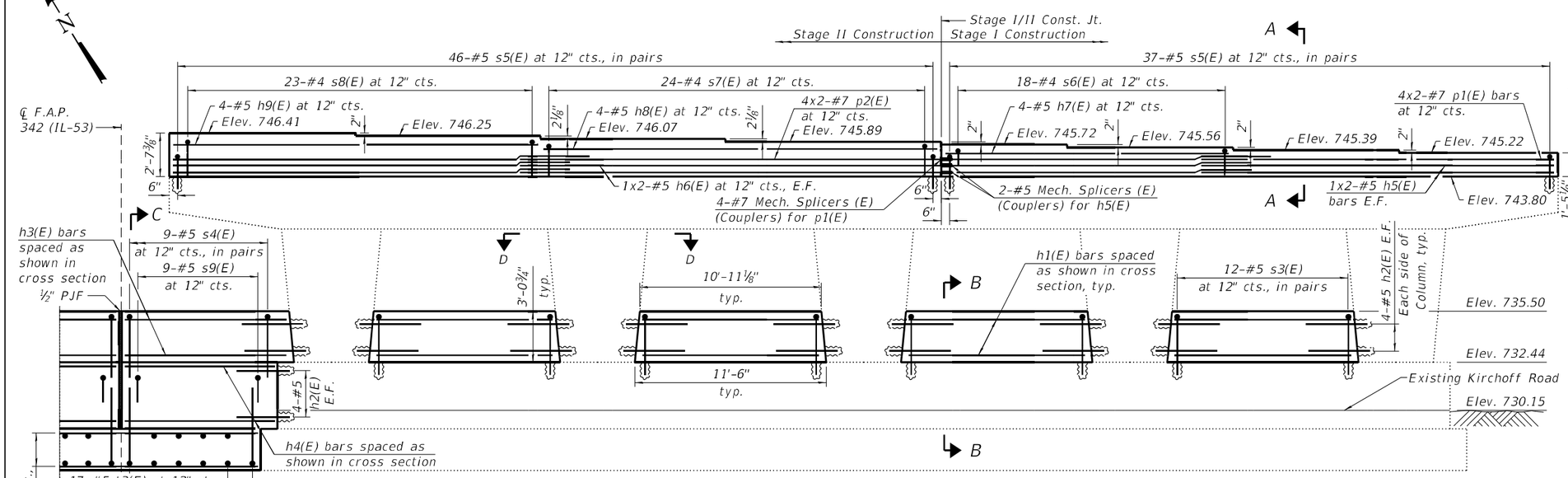

PIER 1 SOUTH ELEVATION

(Looking North)

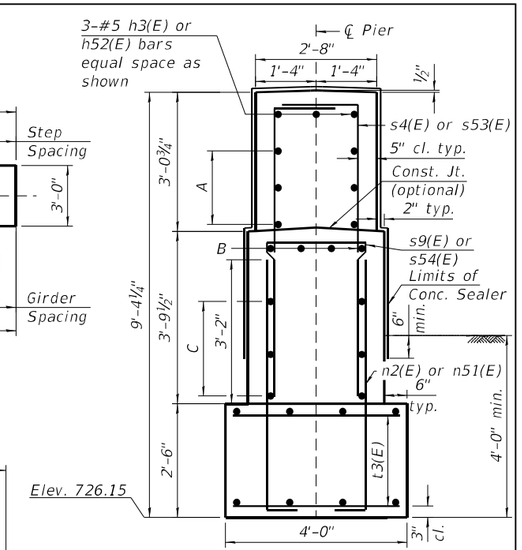

SECTION C-C

A. 3-#5 h3(E) or h52(E) bars at 12" cts., E.F.
B. 4-#5 h4(E) or h53(E) bars equally spaced as shown
C. 3-#5 h4(E) or h53(E) bars at 12" cts., E.F.

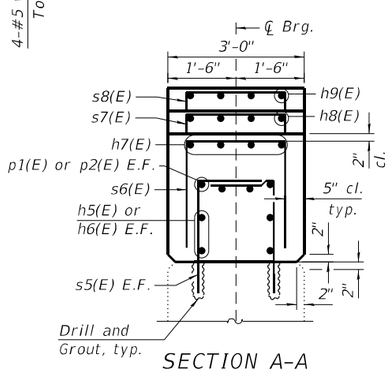

SECTION A-A

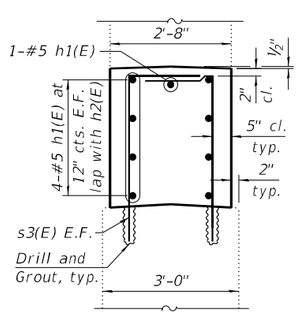

SECTION B-B

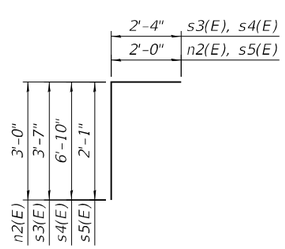

BARS n2(E) AND s3(E) THRU s5(E)

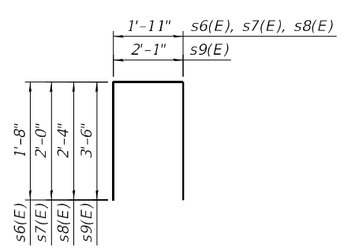

BARS s6(E) THRU s9(E)

Notes:

1. Cost of drilling and grouting reinforcing bars included in cost for Concrete Structures.
2. Bars shall be drilled and set according to Article 584 of the Standard Specifications. Bars shall have a 9" minimum embedment depth.
3. All construction joints between new and existing concrete shall be Bonded Construction Joints.
4. A film forming concrete sealer shall be applied to horizontal surfaces to the designated area of the bearing seats. A penetrating concrete sealer shall be applied to vertical surfaces to the designated area of all new existing concrete.
5. See sheet 2 of 66 for Offset sketch.
6. Bars indicated thus 2x3-#5 etc. indicates 2 lines of bars with 3 lengths per line.
7. Bars h52(E), h53(E), s53(E), s54(E), and n51(E) are quantified in total bill of materials on sheet 59 of 66.
8. See sheet 59 of 66 for Detail A.
9. See sheet 60 of 66 for Section D-D.

BILL OF MATERIAL

Bar	No.	Size	Length	Shape
h1(E)	36	#5	10'-7"	
h2(E)	80	#5	3'-8"	
h3(E)	9	#5	19'-6"	
h4(E)	10	#5	8'-10"	
h5(E)	8	#5	19'-10"	
h6(E)	8	#5	24'-6"	
h7(E)	4	#5	17'-3"	
h8(E)	4	#5	23'-9"	
h9(E)	4	#5	22'-0"	
n2(E)	18	#5	7'-5"	
p1(E)	8	#7	20'-5"	
p2(E)	8	#7	25'-1"	
s3(E)	96	#5	5'-11"	
s4(E)	18	#5	11'-4"	
s5(E)	166	#5	4'-3"	
s6(E)	18	#4	5'-2"	
s7(E)	24	#4	5'-10"	
s8(E)	22	#4	6'-7"	
s9(E)	9	#5	5'-8"	
t3(E)	34	#5	3'-7"	
w4(E)	8	#5	15'-11"	
Concrete Structures			CU YD	48.0
Reinforcement Bars, Epoxy Coated			POUND	4,600
Mechanical Splicers			EACH	8
Concrete Sealer			SQ FT	1,258

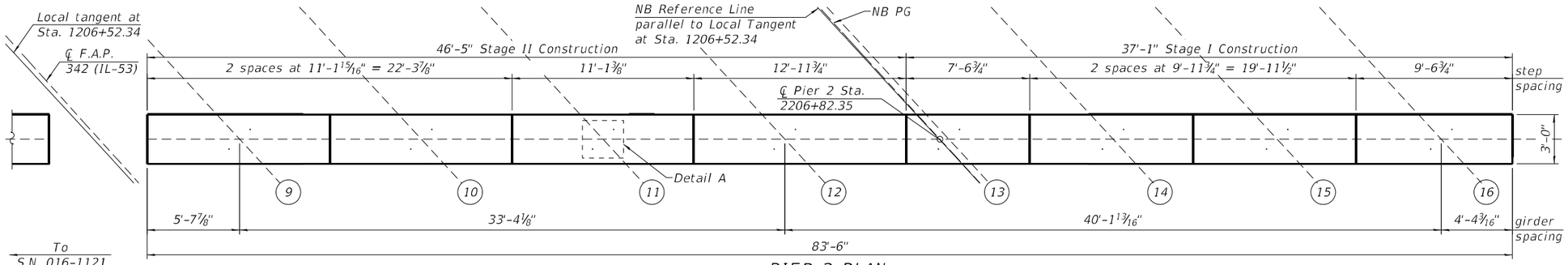

PIER 2 PLAN

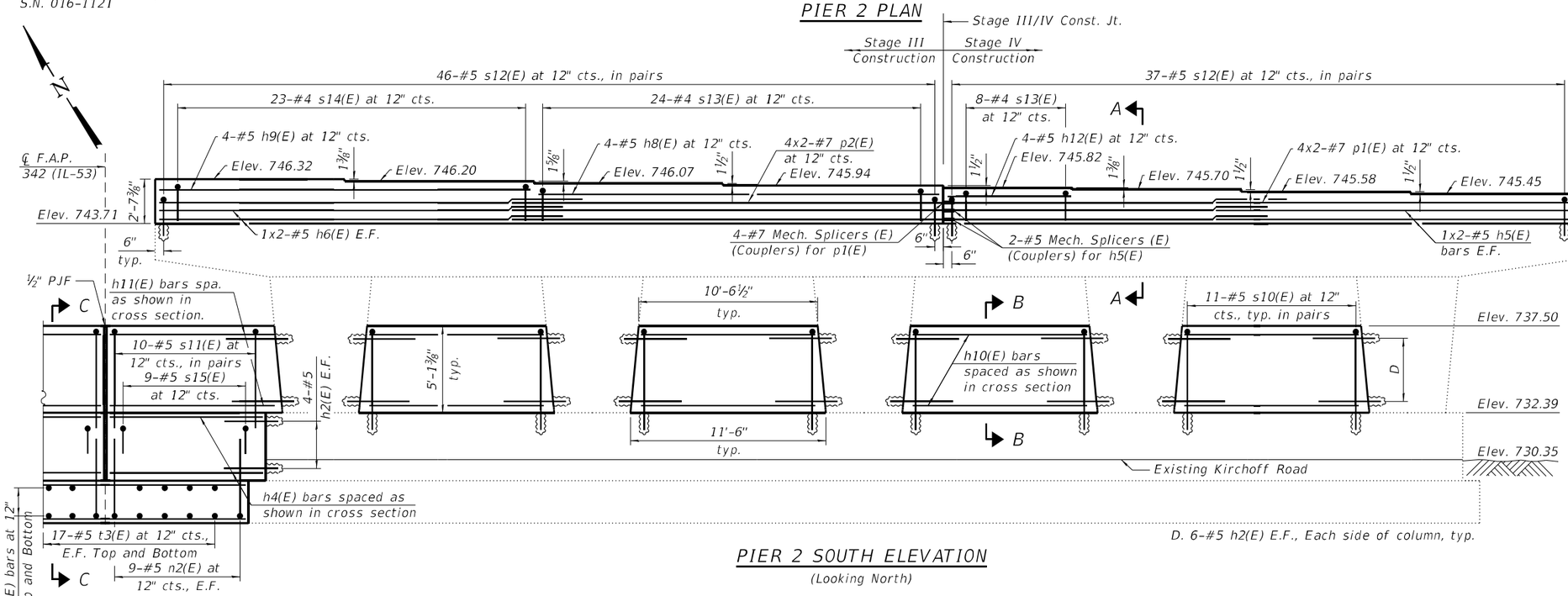

PIER 2 SOUTH ELEVATION

(Looking North)

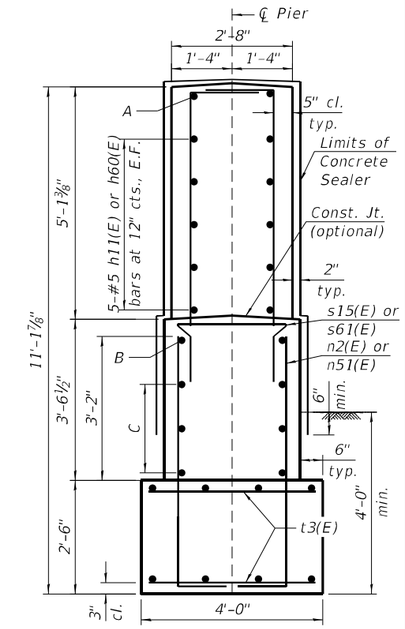

SECTION C-C

A. 3-#5 h11(E) or h60(E) bars at 12" cts., E.F.
B. 4-#5 h4(E) or h53(E)bars at 12" cts., E.F.
C. 3-#5 h4(E) or h53(E)bars at 12" cts., E.F.

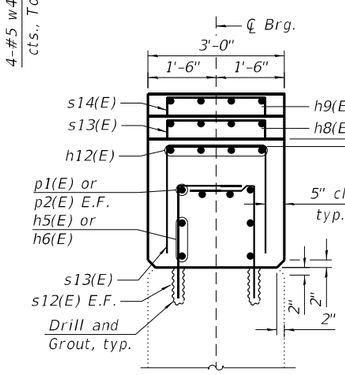

SECTION A-A

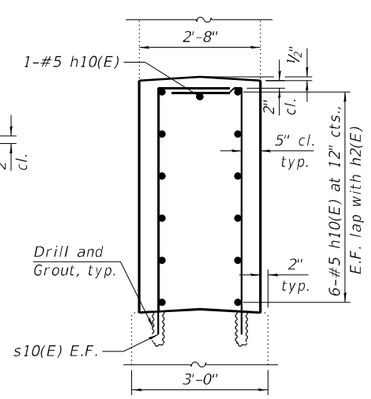

SECTION B-B

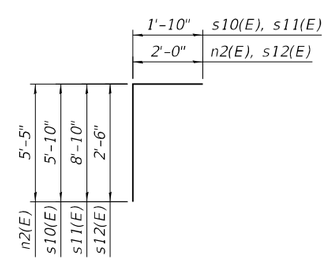

BARS n2(E) AND s10(E) THRU s12(E)

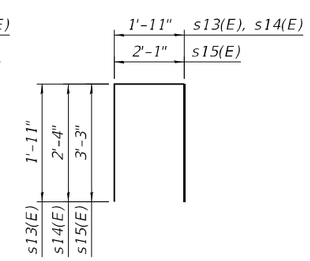

BARS s13(E) THRU s15(E)

Notes:

1. Cost of drilling and grouting reinforcing bars included in cost for Concrete Structure.
2. Bars shall be drilled and set according to Article 584 of the Standard Specifications. Bars shall have a 9" minimum embedment depth.
3. All construction joins between new and existing concrete shall be Bonded Construction Joints.
4. A film forming concrete sealer shall be applied to horizontal surfaces to the designated area of the bearing seats. A penetrating concrete sealer shall be applied to vertical surfaces to the designated area of all new existing concrete.
5. See sheet 2 of 66 for Offset sketch.
6. Bars indicated thus 2x3-#5 etc. indicates 2 lines of bars with 3 lengths per line.
7. Bars h53(E), h60(E), s60(E), s61(E), and n51(E) are quantified in total bill of materials on sheet 60 of 66.
8. See sheet 60 of 66 for Detail A and Section D-D.

BILL OF MATERIAL

Bar	No.	Size	Length	Shape
h2(E)	116	#5	3'-8"	
h4(E)	10	#5	18'-1"	
h5(E)	8	#5	19'-10"	
h6(E)	8	#5	24'-6"	
h8(E)	4	#5	23'-9"	
h9(E)	4	#5	22'-0"	
h10(E)	52	#5	10'-3"	
h11(E)	13	#5	19'-1"	
h12(E)	4	#5	7'-3"	
n2(E)	18	#5	7'-5"	
p1(E)	8	#7	20'-5"	
p2(E)	8	#7	25'-1"	
s10(E)	88	#5	7'-8"	
s11(E)	20	#5	13'-0"	
s12(E)	166	#5	4'-6"	
s13(E)	32	#4	5'-10"	
s14(E)	22	#4	6'-6"	
s15(E)	9	#5	5'-2"	
t3(E)	34	#5	3'-7"	
w4(E)	8	#5	15'-11"	
Concrete Structures			CU YD	61.3
Reinforcement Bars, Epoxy Coated			POUND	5,200
Mechanical Splicers			EACH	8
Concrete Sealer			SQ FT	1,260

MODEL: Default
FILE NAME: s:\IOL6300-6399\6346113\Drawings\CAD\Micro-SSA\CAD_Sheets\0160376113-C3-058-PMD2-SA1.dgn

9/20/2024 3:12:34 PM

STRAND ASSOCIATES
1170 SOUTH HOUBOLT ROAD
JOLIET, ILLINOIS 60431
(815) 744-4200
IDFPR NO. 184-001273

USER NAME = codyh	DESIGNED - ELR	REVISED -	
	CHECKED - NDR	REVISED -	
PLOT SCALE = 0:2.0000 ':" / in.	DRAWN - CJH	REVISED -	
PLOT DATE = 9/20/2024	CHECKED - NDR	REVISED -	

STATE OF ILLINOIS
DEPARTMENT OF TRANSPORTATION

PIER 2 MODIFICATION DETAILS
STRUCTURE NO. 016-0376 (NB)

SHEET 58 OF 66 SHEETS

F.A.P. RTE.	SECTION	COUNTY	TOTAL SHEETS	SHEET NO.
342	(531) BR 23	COOK	1211	743
		CONTRACT NO. 62W38		
	ILLINOIS	FED. AID PROJECT		

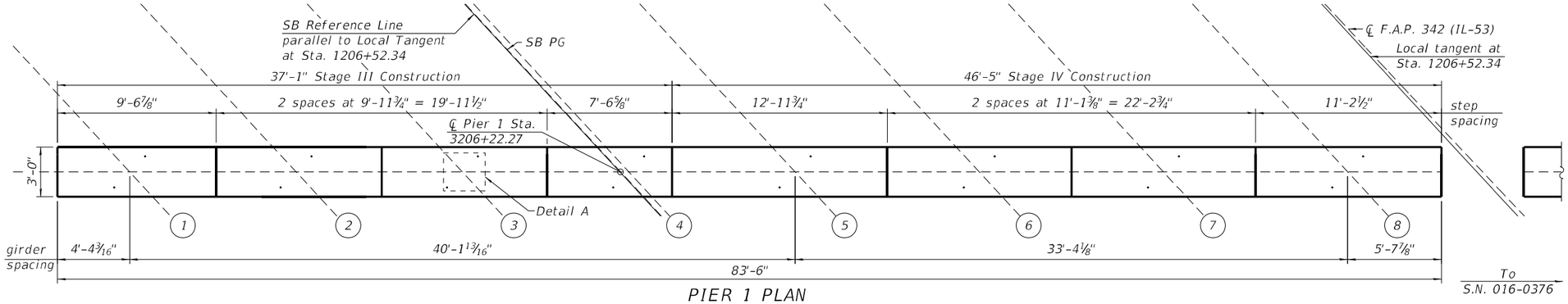

PIER 1 PLAN

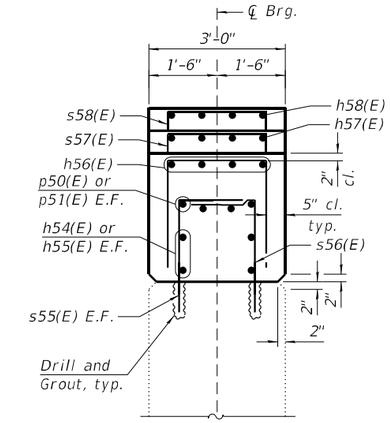

SECTION A-A

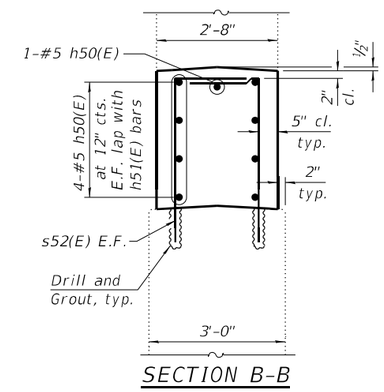

SECTION B-B

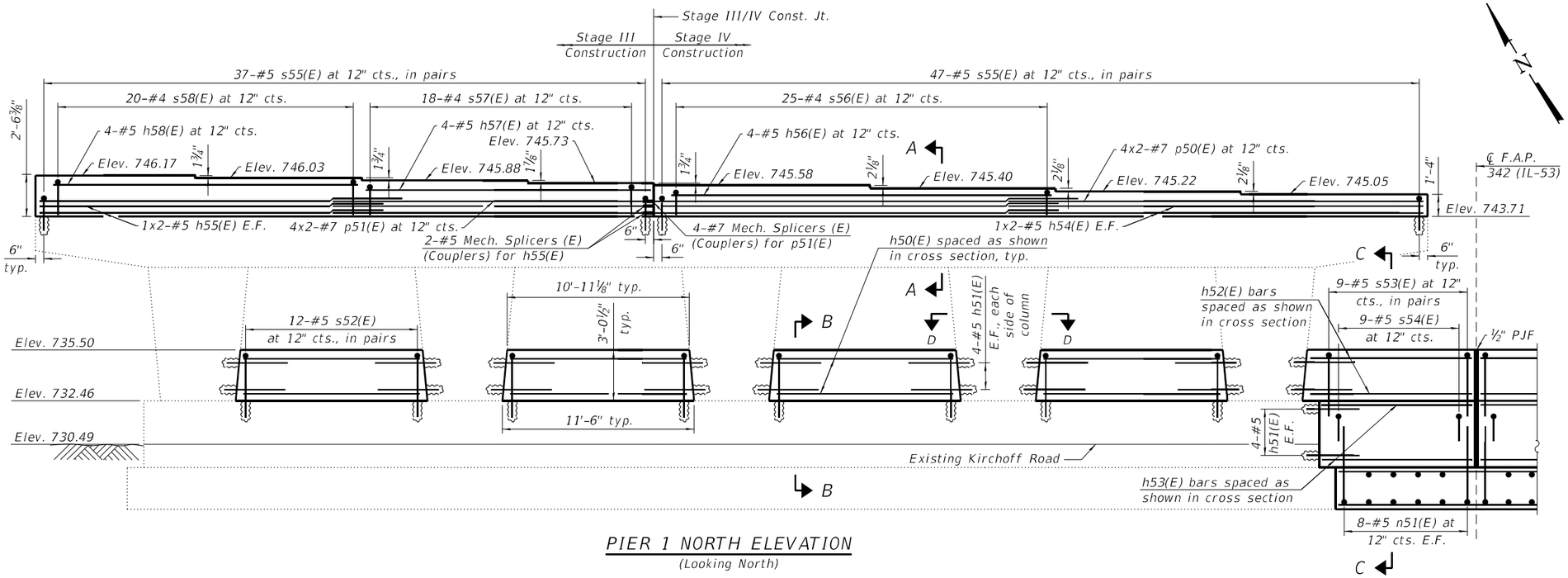

PIER 1 NORTH ELEVATION

(Looking North)

BILL OF MATERIAL

Bar	No.	Size	Length	Shape
h50(E)	36	#5	10'-7"	
h51(E)	80	#5	3'-8"	
h52(E)	9	#5	19'-6"	
h53(E)	10	#5	8'-10"	
h54(E)	8	#5	24'-6"	
h55(E)	8	#5	19'-10"	
h56(E)	4	#5	23'-9"	
h57(E)	4	#5	17'-2"	
h58(E)	4	#5	19'-3"	
n51(E)	18	#5	7'-5"	
p50(E)	8	#7	25'-1"	
p51(E)	8	#7	20'-5"	
s52(E)	96	#5	5'-0"	
s53(E)	18	#5	11'-4"	
s54(E)	9	#5	6'-0"	
s55(E)	168	#5	4'-0"	
s56(E)	24	#4	4'-9"	
s57(E)	18	#4	5'-5"	
s58(E)	20	#4	6'-0"	
Concrete Structures			CU YD	31.7
Reinforcement Bars, Epoxy Coated			POUND	4,170
Mechanical Splicers			EACH	8
Concrete Sealer			SQ FT	1,256

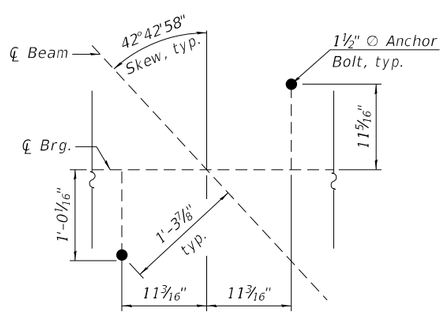

ANCHOR BOLT LOCATION PLAN
DETAIL A

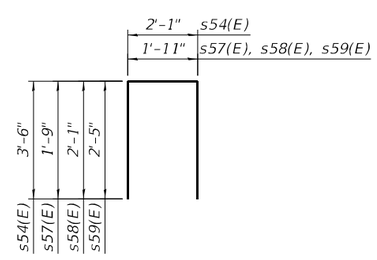

BARS s54(E), s57(E) THRU s59(E)

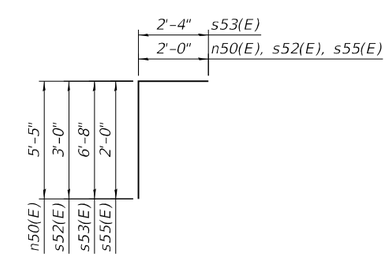

BARS n50(E), s52(E), s53(E) s55(E)

Notes:

1. Cost of drilling and grouting reinforcing bars included in cost for Concrete Structures.
2. Bars shall be drilled and set according to Article 584 of the Standard Specifications. Bars shall have 9" minimum embedment depth.
3. All construction joints between new and existing concrete shall be Bonded Construction Joints.
4. A film forming concrete sealer shall be applied to horizontal surfaces to the designated area of the bearing seats. A penetrating concrete sealer shall be applied to vertical surfaces to the designated area of all new existing concrete.
5. See sheet 2 of 66 for Offset sketch.
6. Bars included thus 2x3-#5 etc. indicates 2 lines of bars with 3 lengths per line.
7. See sheet 57 of 66 for Section C-C.
8. See sheet 60 of 66 for Section D-D.

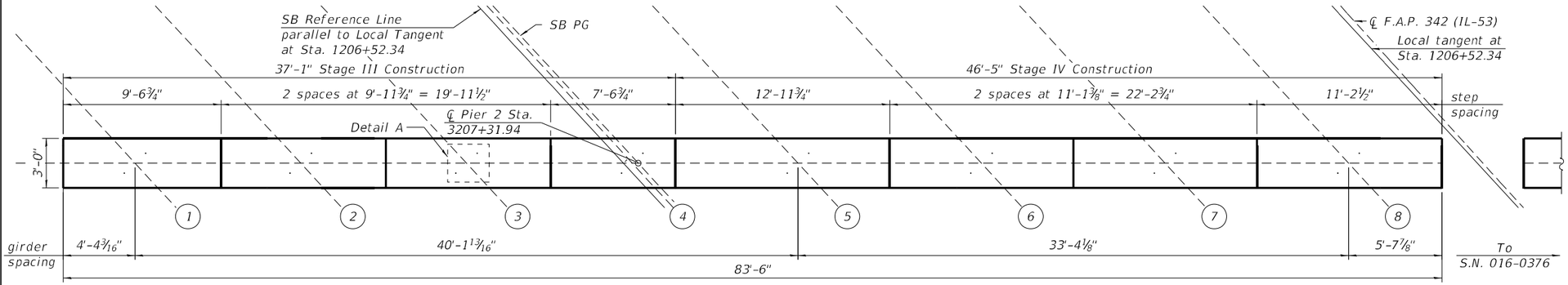

PIER 2 PLAN

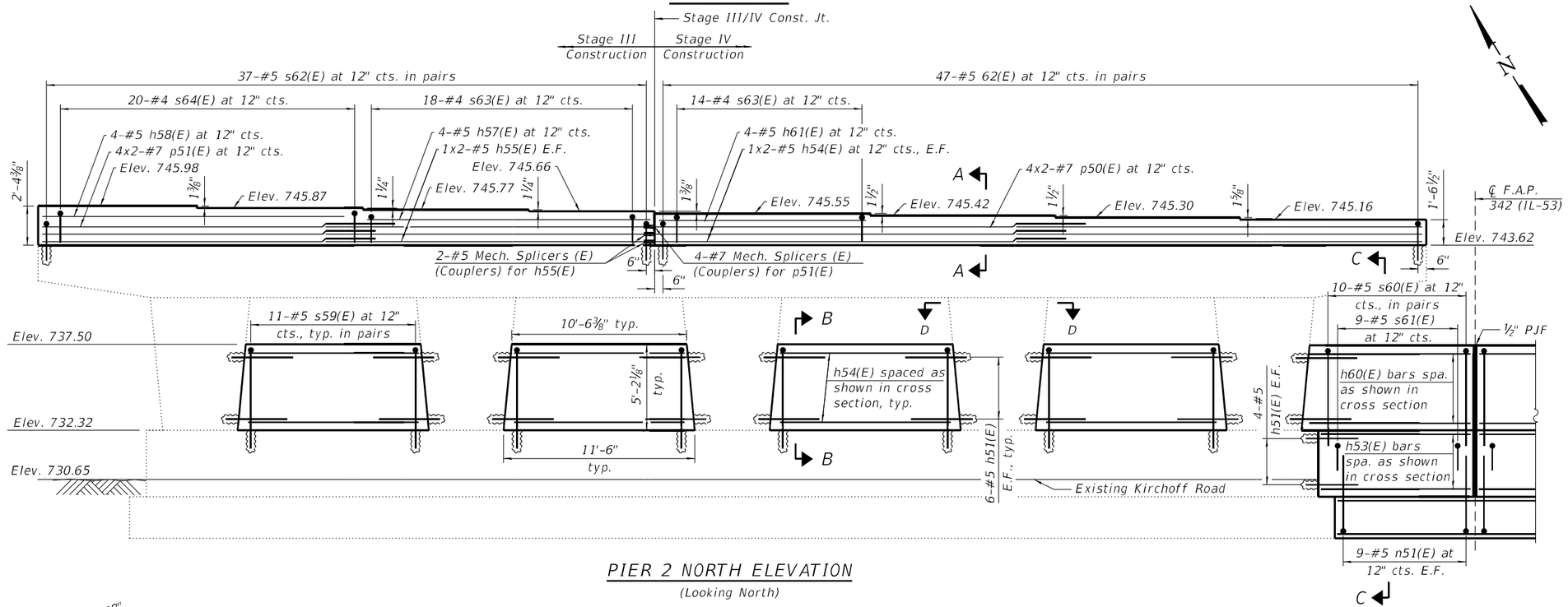

PIER 2 NORTH ELEVATION

(Looking North)

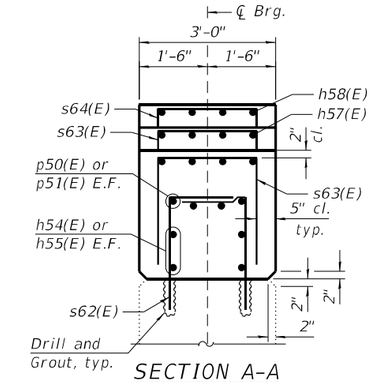

SECTION A-A

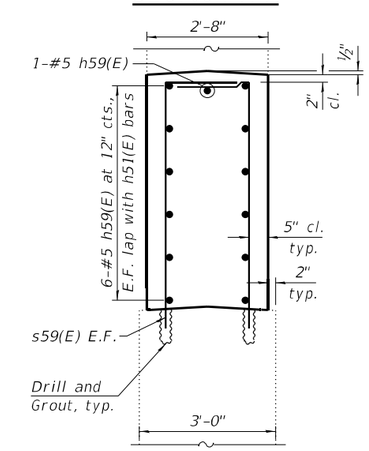

SECTION B-B

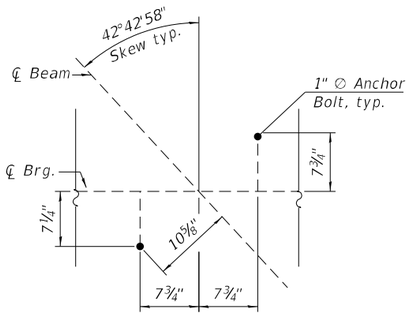

ANCHOR BOLT LOCATION PLAN
DETAIL A

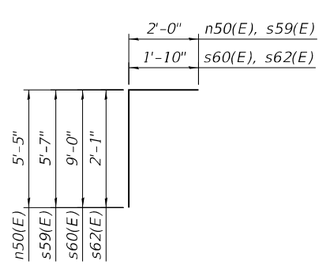

BARS n50(E), s59(E),
s60(E), s62(E)

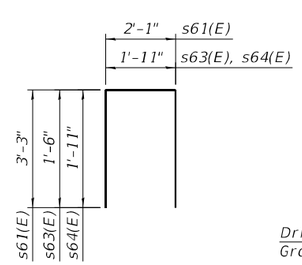

BARS s61(E),
s63(E), s64(E)

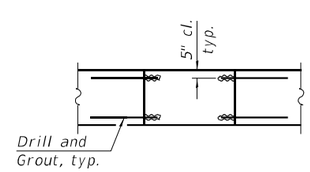

SECTION D-D

Notes:

1. Cost of drilling and grouting reinforcing bars included in cost for Concrete Structures.
2. Bars shall be drilled and set according to Article 584 of the Standard Specificatations. Bars shall have a 9" minimum embedment depth.
3. All construction joints between new and existing concrete shall be Bonded Construction Joints.
4. A film forming concrete sealer shall be applied to horizontal surfaces to the designated area of the bearing seats. A penetrating concrete sealer shall be applied to vertical surfaces to the designated area of all new existing concrete.
5. See sheet 2 of 66 for Offset sketch.
6. Bars indicated thus 2x3-#5 etc. indicates 2 lines of bars with 3 lengths per line.
7. See sheet 58 of 66 for Section C-C.

BILL OF MATERIAL

Bar	No.	Size	Length	Shape
h51(E)	116	#5	3'-8"	
h53(E)	14	#5	19'-1"	
h54(E)	8	#5	24'-6"	
h55(E)	8	#5	19'-10"	
h57(E)	4	#5	17'-2"	
h58(E)	4	#5	19'-3"	
h59(E)	52	#5	10'-3"	
h60(E)	13	#5	19'-1"	
h61(E)	4	#5	12'-8"	
n51(E)	18	#5	7'-5"	
p50(E)	8	#7	25'-1"	
p51(E)	8	#7	20'-5"	
s59(E)	88	#5	7'-7"	
s60(E)	20	#5	10'-10"	
s61(E)	9	#5	5'-6"	
s62(E)	168	#5	3'-11"	
s63(E)	32	#4	5'-0"	
s64(E)	20	#4	5'-8"	
Concrete Structures			CU YD	40.0
Reinforcement Bars, Epoxy Coated			POUND	4,840
Mechanical Splicers			EACH	8
Concrete Sealer			SQ FT	1,249

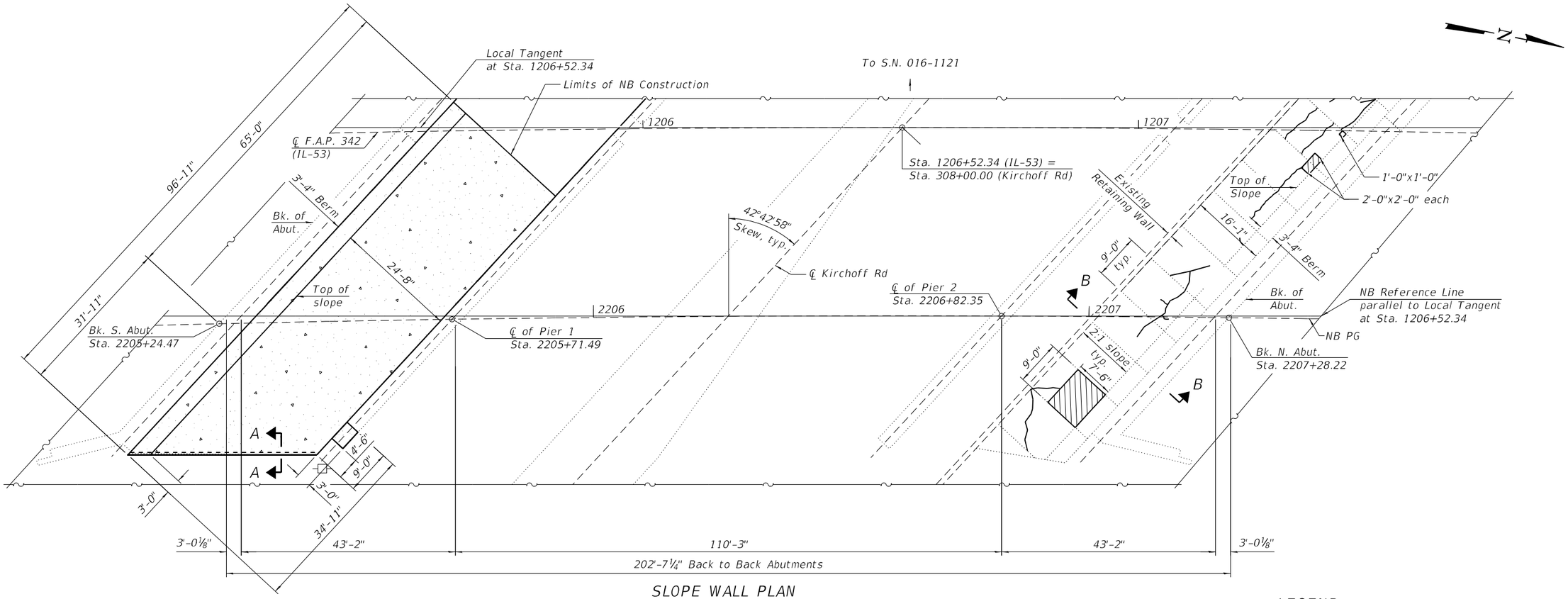

SLOPE WALL PLAN

LEGEND

- Slope Wall Removal and Slope Wall 4 Inch
- Slope Wall Crack Sealing
- Slope Wall Repair

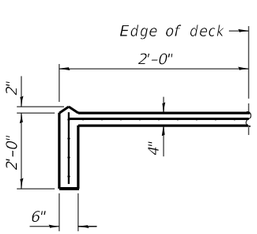

SECTION A-A

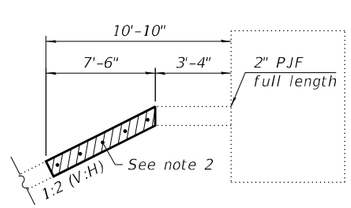

SECTION B-B

(North Slope Wall)

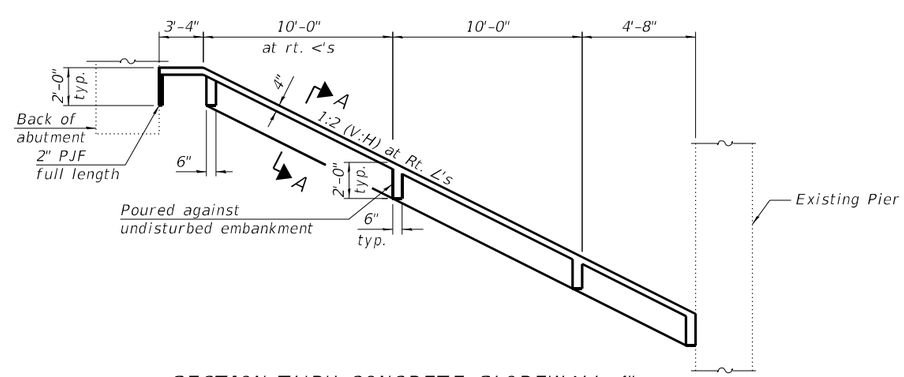

SECTION THRU CONCRETE SLOPEWALL 4"

(South Slope Wall)

BILL OF MATERIALS

Item	Unit	Total
Slope Wall Removal	SQ YD	290
Slope Wall 4 Inch	SQ YD	290
Slope Wall Crack Sealing	FOOT	87
Slope Wall Repair	SQ YD	9

Notes:

1. Slope wall shall be reinforced with welded wire fabric, 6in. x 6in. - W4.0 x W4.0, weighing 58lbs. per 100 sq. ft.
2. Existing welded wire fabric shall extend 6" into the proposed Slope Wall Repair. The exposed 6" of welded wire fabric on either side shall be lapped with the proposed slope wall reinforcement.
3. Cost of welded wire fabric shall be included in Slope Wall Repair or Slope Wall 4 Inch.
4. The cost of Preformed Joint Filler 2" where indicated is included in the cost of associated slope wall pay items.

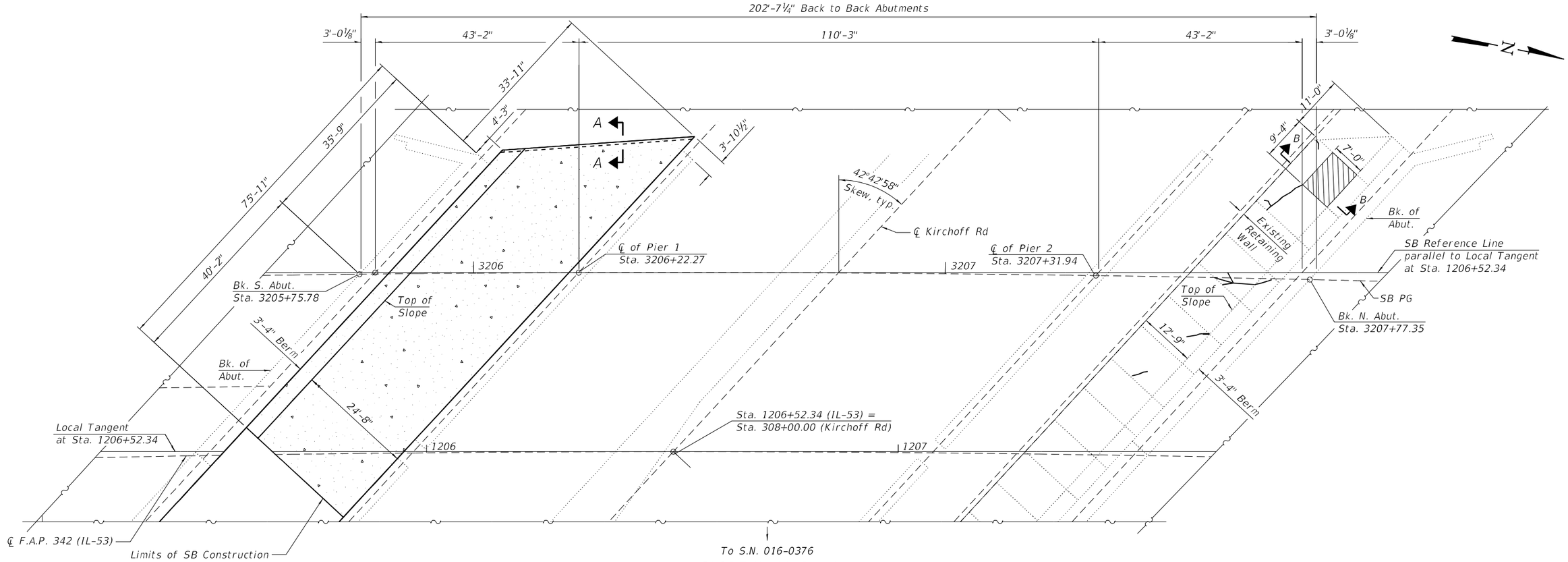

SLOPE WALL PLAN

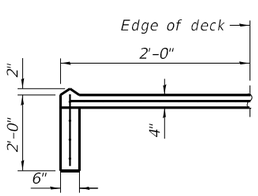

SECTION A-A

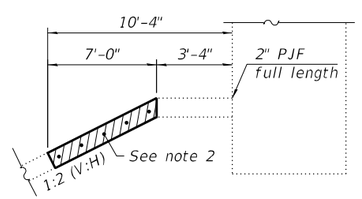

SECTION B-B

(North Slope Wall)

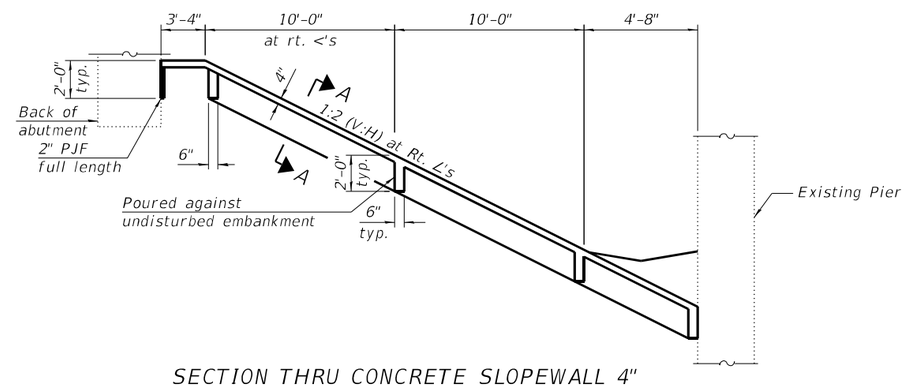

SECTION THRU CONCRETE SLOPEWALL 4"

(South Slope Wall)

LEGEND

- Slope Wall Removal and Slope Wall 4 Inch
- Slope Wall Crack Sealing
- Slope Wall Repair

BILL OF MATERIALS

Item	Unit	Total
Slope Wall Removal	SQ YD	322
Slope Wall 4 Inch	SQ YD	322
Slope Wall Crack Sealing	FOOT	30
Slope Wall Repair	SQ YD	9

Notes:

1. Slope wall shall be reinforced with welded wire fabric, 6in. x 6in. - W4.0 x W4.0, weighing 58lbs. per 100 sq. ft.
2. Existing welded wire fabric shall extend 6" into the proposed Slope Wall Repair. The exposed 6" of welded wire fabric on either side shall be lapped with the proposed slope wall reinforcement.
3. Cost of welded wire fabric shall be included in Slope Wall Repair or Slope Wall 4 Inch.
4. The cost of Preformed Joint Filler 2" where indicated is included in the cost of associated slope wall pay items.

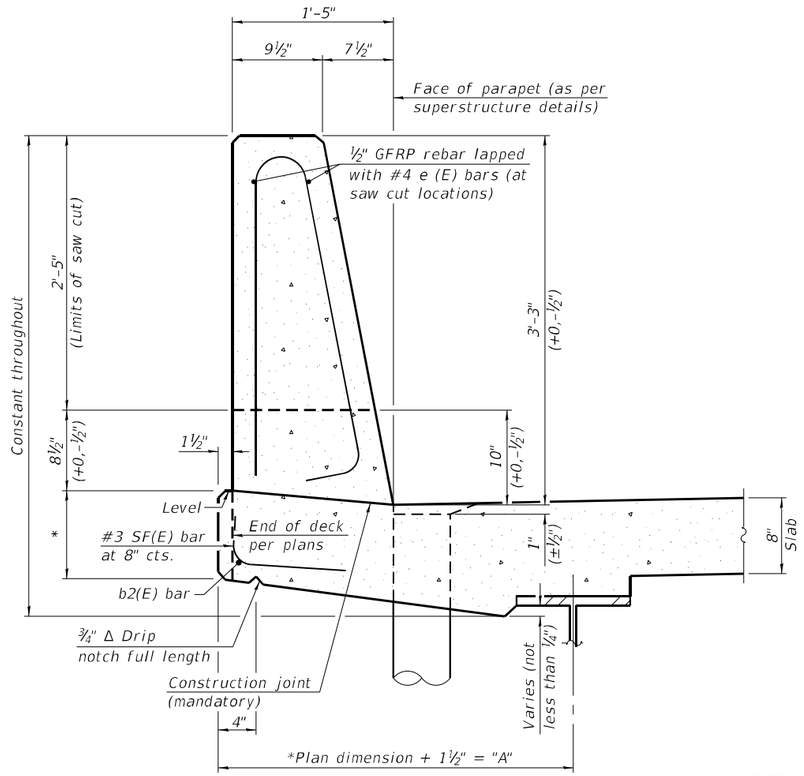

39" CONSTANT-SLOPE PARAPET SECTION

(Showing dimensions, d(E), and ½" Ø GFRP rebar)

STEEL SUPERSTRUCTURES

*See Superstructure Details.

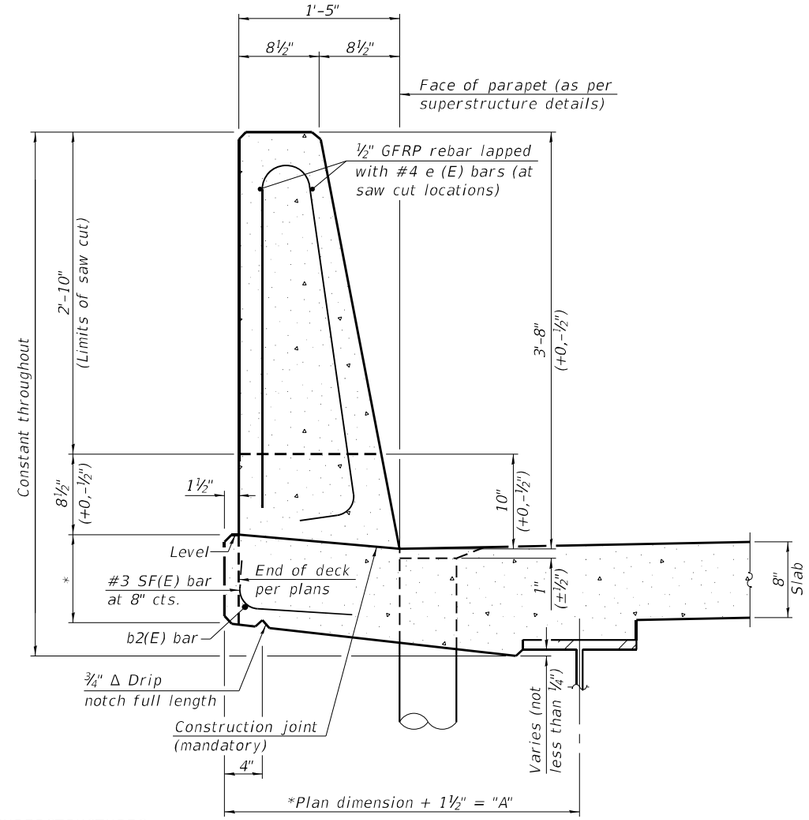

44" CONSTANT-SLOPE PARAPET SECTION

(Showing dimensions, d(E), and ½" Ø GFRP rebar)

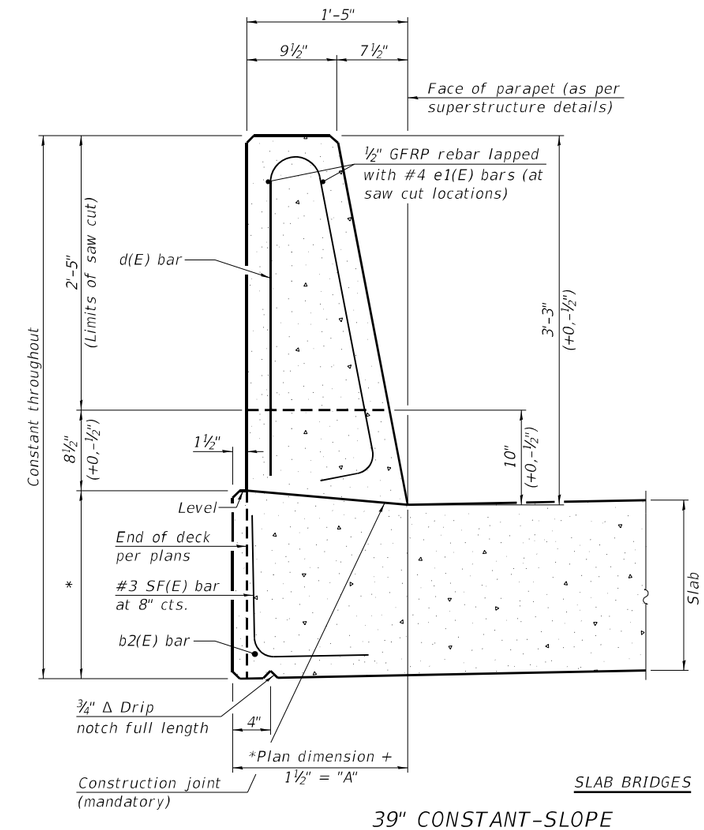

SLAB BRIDGES

39" CONSTANT-SLOPE PARAPET SECTION

(Showing dimensions, d(E), and ½" Ø GFRP rebar)

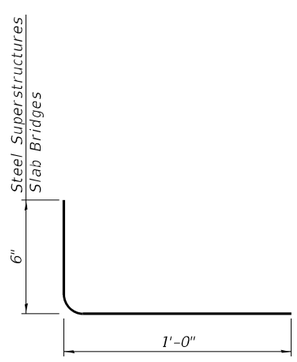

SF(E) BAR

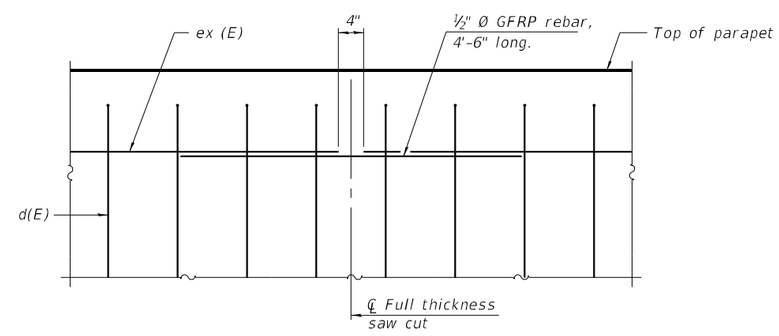

DETAIL - GFRP REBAR STIFFENING ELEVATION

(Place as shown in parapet section at each parapet joint location.)

Notes:

1. All dimensions shall remain the same as shown on superstructure details, except dimension "A" which is to be revised as shown.
   Additional concrete needed to revise dimension "A" (39" and 44" parapets):
   Steel Superstructures: 0.00348 cu. yds./ft.
   Slab Bridge Superstructures: cu. yds./ft.
2. Place full depth aluminum sheets as shown on superstructure details.
3. Replace all cork joint filler locations with a full thickness saw cut.
4. Steel and slab superstructures shown. Other superstructure types similar.
5. Slip forming is not allowed on parapets with form liners.

SFP 39-44 10/27/2023

MODEL: Default
FILE NAME: S:\IOL\16300-63996346\113\Drawings\CAD\Micro-SSA\CAD_Sheets\0160376112 1-C3-063-CPSFO-SAL.dgn
9/20/2024 3:12:43 PM

STRAND ASSOCIATES
1170 SOUTH HOUBOLT ROAD
JOLIET, ILLINOIS 60431
(815) 744-4200
IDFPR NO. 184-001273

USER NAME = codyh	DESIGNED - TJE	REVISED -	
	CHECKED - NDR	REVISED -	
PLOT SCALE = 0:2.0000 ':" / in.	DRAWN - CJH	REVISED -	
PLOT DATE = 9/20/2024	CHECKED - TJE	REVISED -	

STATE OF ILLINOIS
DEPARTMENT OF TRANSPORTATION

CONCRETE PARAPET SLIP FORMING OPTION
STRUCTURE NO. 016-0376 (NB) AND 016-1121 (SB)

SHEET 63 OF 66 SHEETS

F.A.P. RTE.	SECTION	COUNTY	TOTAL SHEETS	SHEET NO.
342	(531) BR 23	COOK	1211	748
		CONTRACT NO. 62W38		
		ILLINOIS	FED. AID PROJECT	

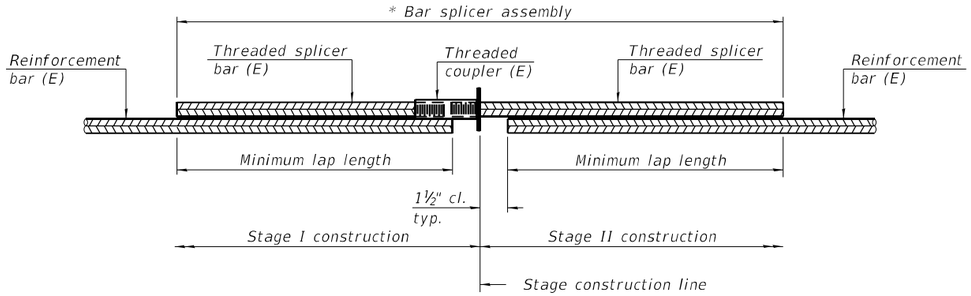

STANDARD BAR SPLICER ASSEMBLY PLAN

Only bar splicer assemblies as presented on the approved QPL list may be used.

Threaded splicer bar length = min. lap length + 1½" + thread length

* Epoxy not required on Bar Splicer Assembly components used in conjunction with black bars.

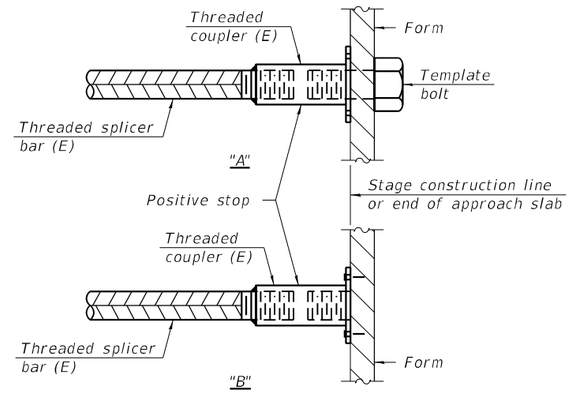

INSTALLATION AND SETTING METHODS

"A" : Set bar splicer assembly by means of a template bolt.
"B" : Set bar splicer assembly by nailing to wood forms or cementing to steel forms.
(E) : Indicates epoxy coating.

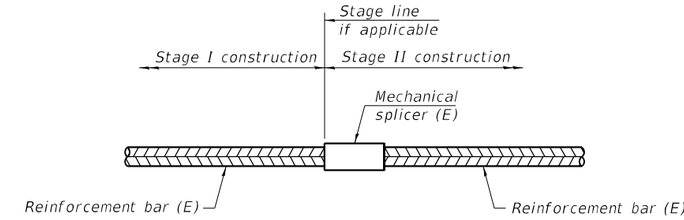

STANDARD MECHANICAL SPLICER

STRUCTURE NO. 016-0378 NB

Location	Bar Size	No. Assemblies required	Minimum lap length
Top Deck	#5	478	3'-0"
Bottom Deck	#5	265	3'-6"
S. Approach Slab	#5	85	3'-0"
S. Approach Slab	#8	60	4'-9"
N. Approach Slab	#5	85	3'-0"
N. Approach Slab	#8	60	4'-9"

STRUCTURE NO. 016-1121SB

Location	Bar Size	No. Assemblies required	Minimum lap length
Top Deck	#5	478	3'-0"
Bottom Deck	#5	265	3'-6"
S. Approach Slab	#5	85	3'-0"
S. Approach Slab	#8	60	4'-9"
N. Approach Slab	#5	85	3'-0"
N. Approach Slab	#8	60	4'-9"

STRUCTURE NO. 016-0378 NB

Location	Bar Size	No. Assemblies required
S. Abut. Diaphragm	#4	2
S. Abut. Diaphragm	#6	6
N. Abut. Diaphragm	#4	2
N. Abut. Diaphragm	#6	6
S. Abut.	#5	4
S. Abut.	#7	5
N. Abut.	#5	4
N. Abut.	#7	5
Pier 1	#5	4
Pier 1	#7	4
Pier 2	#5	4
Pier 2	#7	4

STRUCTURE NO. 016-1121SB

Location	Bar Size	No. Assemblies required
S. Abut Diaphragm	#4	2
S. Abut Diaphragm	#6	6
N. Abut Diaphragm	#4	2
N. Abut Diaphragm	#6	6
S. Abut.	#5	2
S. Abut.	#7	5
N. Abut.	#5	5
N. Abut.	#7	5
Pier 1	#5	4
Pier 1	#7	4
Pier 2	#5	4
Pier 2	#7	4

Notes:
Splicer bars shall be deformed with threaded ends and have a minimum 60 ksi yield strength.
All reinforcement shall be lapped and tied to the splicer bars.
Bar splicer assemblies shall be epoxy coated according to the requirements for reinforcement bars. See Section 508 of the Standard Specifications.
See approved list of bar splicer assemblies and mechanical splicers for alternatives.

BSD-1 2-1-2023

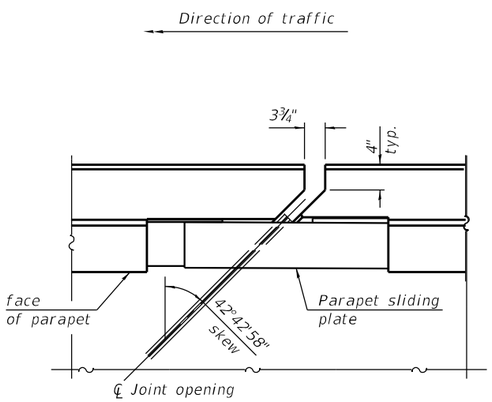

PLAN AT END OF APPROACH

(Drawn for SB IL-53 North approach sliding plate detail, other views similar.)

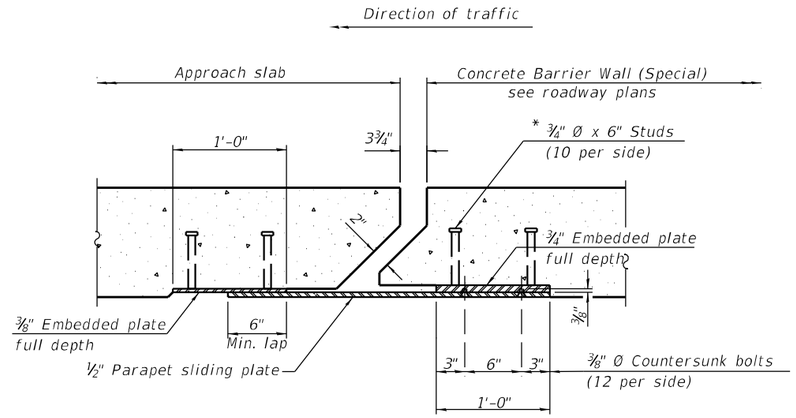

SECTION B-B

(Drawn for SB IL-53 North approach sliding plate detail, other views similar.)

Notes:
The preformed pavement joint seal shall be made continuous and shall have a minimum thickness of ¼". The configuration of the stripseal shall match the configuration of the locking edge rails. Open or "webbed" strip seal gland configurations are not permitted. The gland shall be sized for a maximum rated movement of 4 inches.
The manufacturer's recommended installation methods shall be followed.
All steel components shall be galvanized after fabrication according to Article 520.03 of the Standard Specifications.
Cost of parapet sliding plates, embedded plates, and anchorage studs included with Concrete Barrier Wall (Special)
39" constant slope barrier shown, 44" constant slope barrier similar as noted.

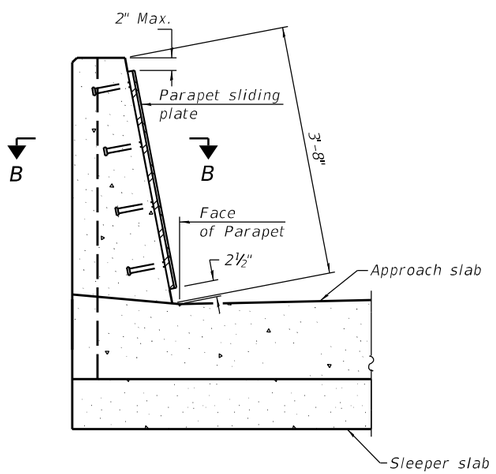

SECTION AT END OF APPROACH

Notes:
1. See bridge approach sheet 34

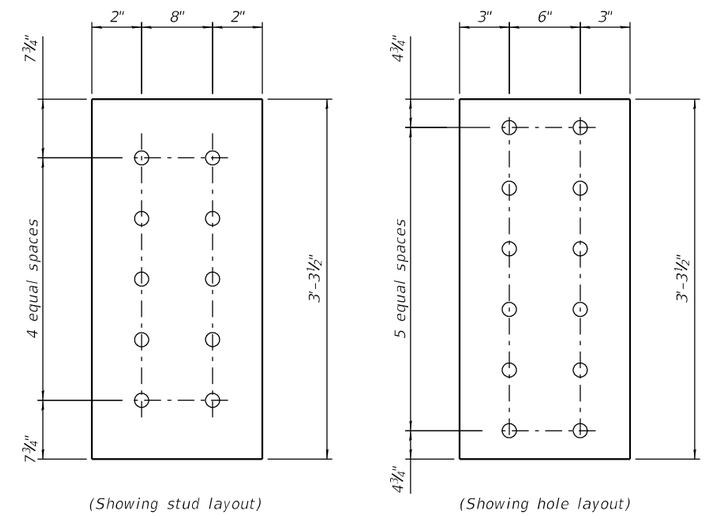

(Showing stud layout) (Showing hole layout)

EMBEDDED PLATE DETAIL

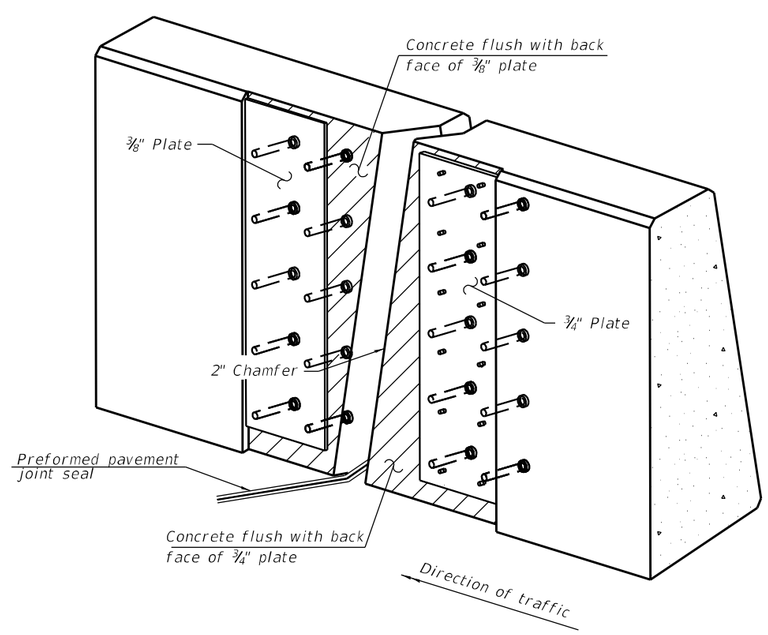

TRIMETRIC VIEW

(Showing embedded plates only)

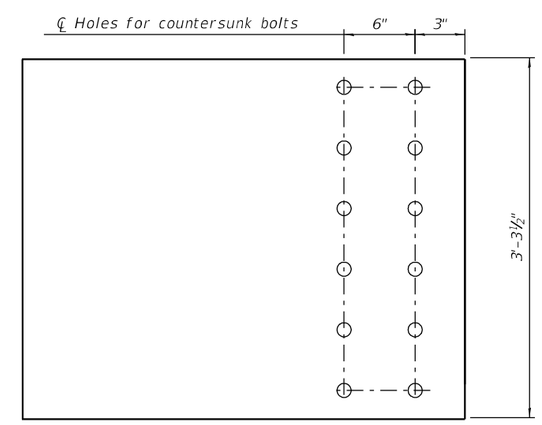

MEDIAN SLIDING PLATE

MODEL: Default
FILE NAME: S:\IDL6300--6399\6346\113\Drawings\CAD\Micro-SS4\CAD_Sheets\0160376121-C3-064A-SP.dgn
9/20/2024 3:50:14 PM

STRAND ASSOCIATES®
1170 SOUTH HOUBOLT ROAD
JOLIET, ILLINOIS 60431
(815) 744-4200
IDFPR NO. 184-001273

USER NAME = codyh	DESIGNED - JAS	REVISED -	
	CHECKED - NDR	REVISED -	
PLOT SCALE = 0:2.0000 ':" / in.	DRAWN - JAS	REVISED -	
PLOT DATE = 9/20/2024	CHECKED - NDR	REVISED -	

STATE OF ILLINOIS
DEPARTMENT OF TRANSPORTATION

MEDIAN SLIDING PLATE
STRUCTURE NO. 016-0376 (NB) AND 016-1121 (SB)

SHEET 64A OF 66 SHEETS

F.A.P. RTE.	SECTION	COUNTY	TOTAL SHEETS	SHEET NO.
342	(531) BR 23	COOK		749A
		CONTRACT NO. 62W38		
	ILLINOIS	FED. AID PROJECT		

SOIL BORING LOG

Date 05/04/23

ROUTE FAP 342 DESCRIPTION IL 53 over Kirchoff Rd LOGGED BY Gonzalez (BR)

SECTION 2018-100-BR LOCATION SE 1/4, SEC. 26, TWP. 42N, RNG. 10E, 3rd PM, Latitude 42.08288755, Longitude 88.03089875

COUNTY Cook DRILLING METHOD Hollow Stem Auger (8" O.D., 3.25" I.D.) HAMMER TYPE Auto 140 lb HE 105

STRUCT. NO. 016-1121
Station

BORING NO. GC-12
Station 3208+17
Offset 27.4 ft RT
Ground Surface Elev. 749.8 ft

Surface Water Elev. ft
Stream Bed Elev. ft

Groundwater Elev.:
First Encounter Dry ft
Upon Completion Dry ft
After Hrs. Filled ft

Description	Elev.	DEPTH (ft)	BLOWS (/6")	UCS Qu (tsf)	MOIST (%)
CONCRETE - 10"	749.0				
Loose, Brown, Moist, Course SAND	748.8		4		
Medium Stiff to Stiff, Brown, Dry, CLAY, Trace Gravel			2 3	3.0 B	17
			4		
		-5	4 5	2.5 B	16
			4		
			2 2	0.6 B	18
			1		
		-10	1 3	0.6 B	20
			2		
			2 4	2.9 B	20
			3		
		-15	4 5		21
			2		
			2 5	1.4 B	20
			4		
	729.8	-20	5 5	2.8 B	19

Description	Elev.	DEPTH (ft)	BLOWS (/6")	UCS Qu (tsf)	MOIST (%)
Stiff, Dark Brown, Moist, CLAY, Trace Gravel			3		
	727.5		5 6	1.7 B	17
Medium Stiff to Stiff, Brown, Dry, CLAY, Trace Gravel			2		
		-25	3 4	1.4 B	18
			4		
			5 9	3.6 B	16
			4		
		-30	7 10	7.2 B	17
			2		
		-35	3 5	2.7 B	18
			2		
		-40	4 6	2.3 B	21

The Unconfined Compressive Strength (UCS) Failure Mode is indicated by (B-Bulge, S-Shear, P-Penetrometer, M-Modified SPT)
The SPT (N value) is the sum of the last two blow values in each sampling zone (AASHTO T206)

BBS, form 137 (Rev. 8-99)

SOIL BORING LOG

Date 05/04/23

ROUTE FAP 342 DESCRIPTION IL 53 over Kirchoff Rd LOGGED BY Gonzalez (BR)

SECTION 2018-100-BR LOCATION SE 1/4, SEC. 26, TWP. 42N, RNG. 10E, 3rd PM, Latitude 42.08288755, Longitude 88.03089875

COUNTY Cook DRILLING METHOD Hollow Stem Auger (8" O.D., 3.25" I.D.) HAMMER TYPE Auto 140 lb HE 105

STRUCT. NO. 016-1121
Station

BORING NO. GC-12
Station 3208+17
Offset 27.4 ft RT
Ground Surface Elev. 749.8 ft

Surface Water Elev. ft
Stream Bed Elev. ft

Groundwater Elev.:
First Encounter Dry ft
Upon Completion Dry ft
After Hrs. Filled ft

Description	Elev.	DEPTH (ft)	BLOWS (/6")	UCS Qu (tsf)	MOIST (%)
Medium Stiff to Stiff, Brown, Dry, CLAY, Trace Gravel *(continued)*			3		
	704.8	-45	5 6	2.6 B	19
Boring terminated at 45 feet.		-50			
		-55			
		-60			

The Unconfined Compressive Strength (UCS) Failure Mode is indicated by (B-Bulge, S-Shear, P-Penetrometer, M-Modified SPT)
The SPT (N value) is the sum of the last two blow values in each sampling zone (AASHTO T206)

BBS, form 137 (Rev. 8-99)

SOIL BORING LOG

Date 05/04/23

ROUTE FAP 342 DESCRIPTION IL 53 over Kirchoff Rd LOGGED BY Gonzalez (BR)

SECTION 2018-100-BR LOCATION SE 1/4, SEC. 26, TWP. 42N, RNG. 10E, 3rd PM, Latitude 42.08209321, Longitude 88.03066368

COUNTY Cook DRILLING METHOD Hollow Stem Auger (8" O.D., 3.25" I.D.) HAMMER TYPE Auto 140 lb HE 105

STRUCT. NO. 016-1121
Station
BORING NO. GC-13
Station 3205+19
Offset 28.1 ft RT
Ground Surface Elev. 750.5 ft

Surface Water Elev. ft
Stream Bed Elev. ft
Groundwater Elev.:
First Encounter Dry ft
Upon Completion Dry ft
After Hrs. Filled ft

Description	Elev.	DEPTH (ft)	BLOWS (/6")	UCS Qu (tsf)	MOIST (%)
CONCRETE - 13"	749.4				
Medium Stiff to Stiff, Brown, Moist, CLAY, Trace Gravel			4		
			2 3	3.5 P	18
			2		
		-5	2 3	1.2 B	22
			4		
			4 3	5.1 S	29
			4		
		-10	4 5	6.7 B	16
			2		
			2 3	2.8 B	16
			2		
		-15	4 6	3.4 B	16
			4		
			6 7	4.9 B	19
			2		
		-20	4 4	3.3 B	19
Medium Stiff to Stiff, Brown, Moist, CLAY, Trace Gravel *(continued)*			2		
			2 3	1.2 B	17
			6		
		-25	6 8	2.6 B	17
	725.0				
Medium Stiff, Dark Brown, Moist, CLAY, Trace Gravel			3		
			3 4	1.1 B	16
	722.5				
Stiff, Brown, Moist to Wet, CLAY, Trace Gravel			3		
		-30	4 5	2.9 B	18
			6		
		-35	8 10		19
			5		
		-40	4 4	0.3 B	22

The Unconfined Compressive Strength (UCS) Failure Mode is indicated by (B-Bulge, S-Shear, P-Penetrometer, M-Modified SPT)
The SPT (N value) is the sum of the last two blow values in each sampling zone (AASHTO T206)

BBS, form 137 (Rev. 8-99)

SOIL BORING LOG

Date 05/04/23

ROUTE FAP 342 DESCRIPTION IL 53 over Kirchoff Rd LOGGED BY Gonzalez (BR)

SECTION 2018-100-BR LOCATION SE 1/4, SEC. 26, TWP. 42N, RNG. 10E, 3rd PM, Latitude 42.08209321, Longitude 88.03066368

COUNTY Cook DRILLING METHOD Hollow Stem Auger (8" O.D., 3.25" I.D.) HAMMER TYPE Auto 140 lb HE 105

STRUCT. NO. 016-1121
Station
BORING NO. GC-13
Station 3205+19
Offset 28.1 ft RT
Ground Surface Elev. 750.5 ft

Surface Water Elev. ft
Stream Bed Elev. ft
Groundwater Elev.:
First Encounter Dry ft
Upon Completion Dry ft
After Hrs. Filled ft

Description	Elev.	DEPTH (ft)	BLOWS (/6")	UCS Qu (tsf)	MOIST (%)
Stiff, Brown, Moist to Wet, CLAY, Trace Gravel *(continued)*			4		
	705.5	-45	5 6	0.8 B	18
Boring terminated at 45 feet.		-50			
		-55			
		-60			

The Unconfined Compressive Strength (UCS) Failure Mode is indicated by (B-Bulge, S-Shear, P-Penetrometer, M-Modified SPT)
The SPT (N value) is the sum of the last two blow values in each sampling zone (AASHTO T206)

BBS, form 137 (Rev. 8-99)

FEDERAL-AID ROUTE NO.	SEC.	COUNTY	TOTAL SHEETS	SHEET NO.
F.A.61	531-1-HB-8	Cook	27	
U. P. R. REG. NO. 4	ILLINOIS	PROJECT	U-184(25)	

STATE OF ILLINOIS
DEPARTMENT OF PUBLIC WORKS AND BUILDINGS
DIVISION OF HIGHWAYS
PLANS FOR PROPOSED FEDERAL AID HIGHWAY

DISTRICT 10
RELOCATED S.B.I. ROUTE 53 (F.A. ROUTE 61) SECTION 531-1 HB-8
DUAL STRUCTURES OVER KIRCHOFF ROAD
PROJECT U-184(25)
COOK COUNTY

GROSS LENGTH 201.26 LIN. FT.

PROJECT U-184(25) NET LENGTH 201.26 LIN. FT. OR 0.038 MILES

END OF PROJECT U-184(25)
STA. 194+09.20

SECTION 531-1-HB-8 INCLUDES THE CONSTRUCTION OF DUAL 3-SPAN CONTINUOUS WELDED PLATE GIRDER GRADE SEPARATION STRUCTURES (TO CARRY RELOCATED ROUTE 53 OVER KIRCHOFF ROAD), EACH HAVING SPANS 2 AT 42'-9" AND 1 AT 110'-3", WITH OPEN R.C. ABUTMENTS AND R.C. PIERS, AT STATION 193+08.57 IN PALATINE TOWNSHIP.

BEG. OF PROJECT U-184(25)
STA. 192+07.94

N

STATE OF ILLINOIS
DEPARTMENT OF PUBLIC WORKS AND BUILDINGS
DIVISION OF HIGHWAYS

SUBMITTED Sept 20 1962 Marshall Sulzway DISTRICT ENGINEER
EXAMINED Oct 1962 A. Van Buschkill ENGINEER OF ROAD PLANS AND CONTRACTS
PASSED October 1962 E. Barrett ENGINEER OF DESIGN
APPROVED October 1962 M. A. Quickenbush ROAD ENGINEER
APPROVED October 1962 S. Gaffey Jr. DIRECTOR

DEPARTMENT OF COMMERCE
BUREAU OF PUBLIC ROADS
APPROVED
DIVISION ENGINEER DATE

FOR INFORMATION ONLY

JOB NO 22707

Cook COUNTY SECTION 531-1-HB-8 F. A. ROUTE 61

MODEL: Default
FILE NAME: S:\IOL6300-6399\6346\113\Drawings\CAD\Micro-SSA\CAD_Sheets\0160376\121-C3-067-EX-SAt.dgn
9/20/2024 3:13:01 PM

STRAND ASSOCIATES 1170 SOUTH HOUBOLT ROAD JOLIET, ILLINOIS 60431 (815) 744-4200 IDFPR NO. 184-001273	USER NAME = codyh	DESIGNED -	REVISED -
		CHECKED -	REVISED -
	PLOT SCALE = 0:2.0000 ':" / in.	DRAWN - CJH	REVISED -
	PLOT DATE = 9/20/2024	CHECKED - TJE	REVISED -

STATE OF ILLINOIS
DEPARTMENT OF TRANSPORTATION

EXISTING DRAWINGS (1 OF 6)
STRUCTURE NO. 016-0376 (NB) AND 016-1121 (SB)

F.A.P. RTE.	SECTION	COUNTY	TOTAL SHEETS	SHEET NO.
342	(531) BR 23	COOK	1211	752
		CONTRACT NO. 62W38		
		ILLINOIS	FED. AID PROJECT	

STATE OF ILLINOIS
DEPARTMENT OF PUBLIC WORKS & BUILDINGS
DIVISION OF HIGHWAYS

ROUTE NO.	SECTION	COUNTY	TOTAL SHEETS	SHEET NO.
S.B.I. 53 / F.A. 61	551-1 HB-8	Cook	27	20
FED. ROAD DIST. NO. 7	ILLINOIS	FED. AID PROJECT-		

SHEET NO. 12
15 SHEETS

NOTE:
Hatched area to be poured after Superstructure formwork has been removed and Expansion Device Assembly has been adjusted.

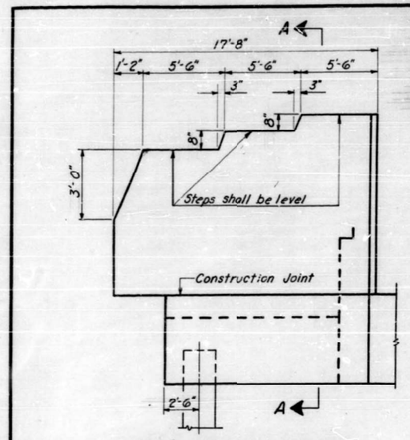

WING WALL ELEVATION
Dimensions

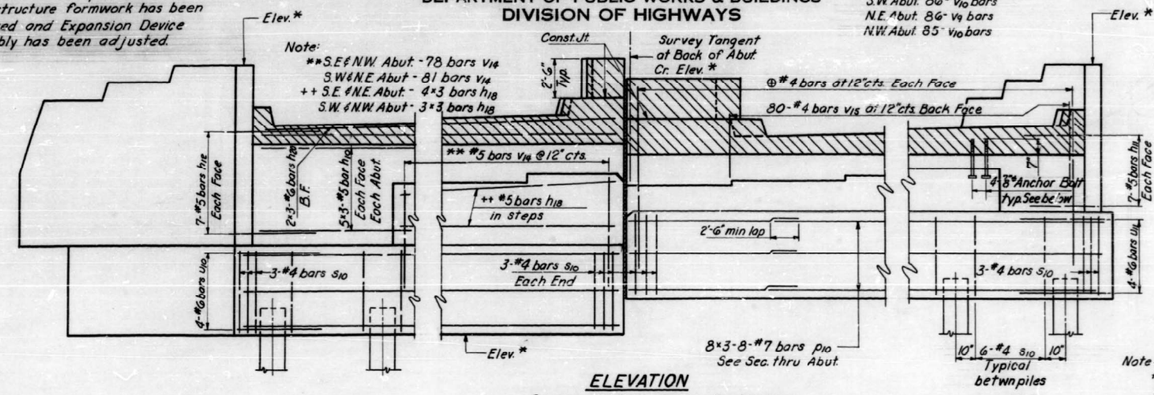

Note:
⊕ S.E. Abut. 85-v9 bars
S.W. Abut. 86-v10 bars
N.E. Abut. 86-v9 bars
N.W. Abut. 85-v10 bars

ELEVATION
Reinforcement similar in all abutment unless noted

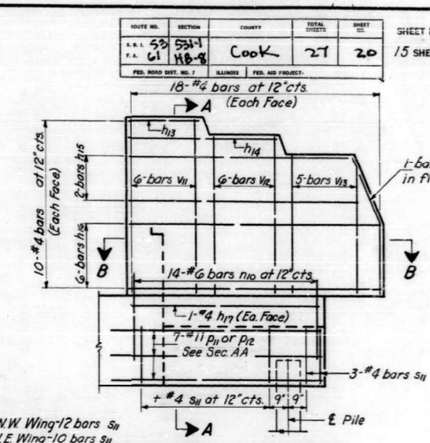

Note:
+ S.E. & N.W. Wing-12 bars s11
S.W. & N.E. Wing-10 bars s11

WING WALL ELEVATION
Reinforcement

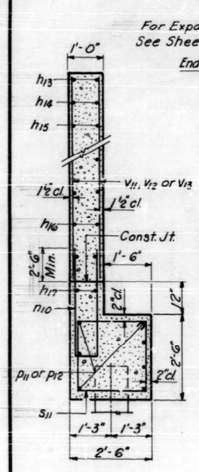

SEC. A-A

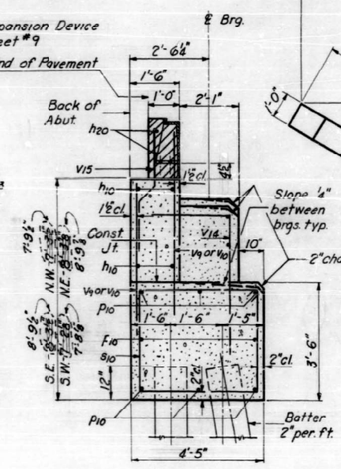

SEC. THRU ABUT.

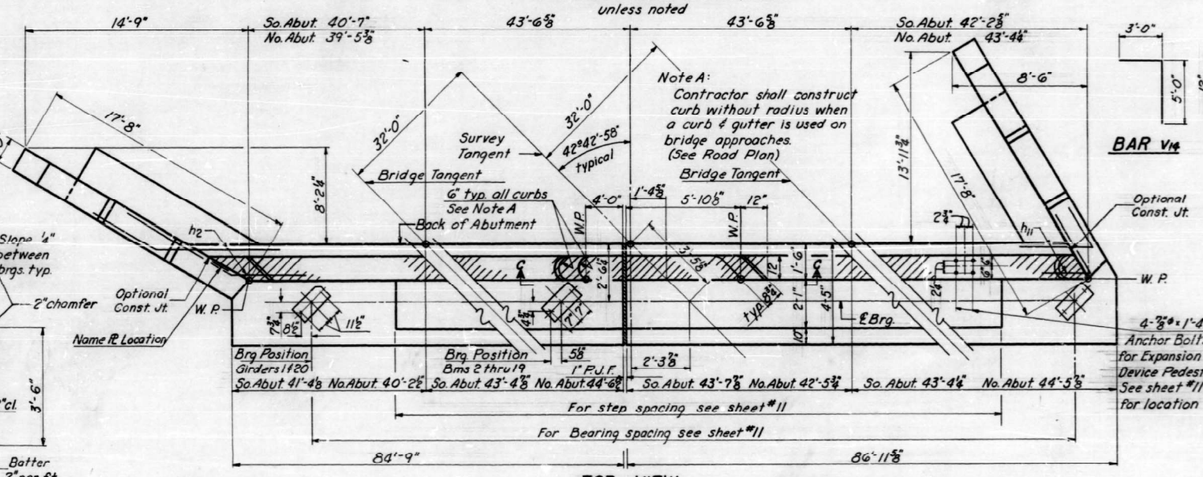

Note A:
Contractor shall construct curb without radius when a curb & gutter is used on bridge approaches. (See Road Plan)

TOP VIEW

FOR INFORMATION ONLY

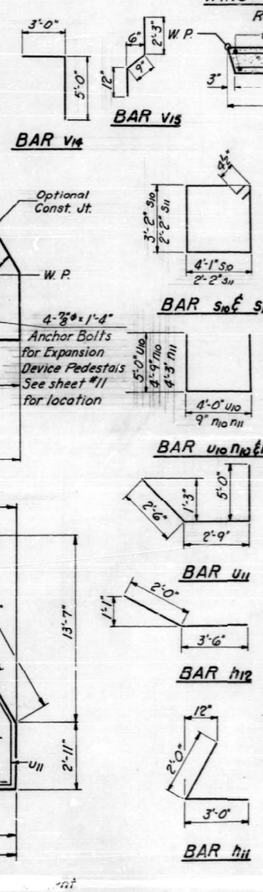

SECTION B B

TOTAL ABUTMENTS
BILL OF MATERIAL

Bar	No.	Size	Length	Shape
h10	120	#5	29'-0"	—
h11	28	#5	5'-0"	L
h12	28	#5	5'-6"	⌊
h13	24	#4	5'-0"	—
h14	8	#4	10'-6"	—
h15	16	#4	16'-0"	—
h16	48	#4	17'-3"	—
h17	8	#4	15'-6"	—
h18	42	#5	28'-0"	—
h19	16	#4	3'-0"	—
h20	24	#6	29'-9"	—
n10	56	#6	10'-3"	⊔
n11	20	#4	9'-3"	⊔
p10	96	#7	30'-6"	—
p11	14	#11	14'-0"	—
p12	14	#11	17'-0"	—
s10	312	#4	15'-3"	⊡
s11	56	#4	9'-5"	⊡
u10	8	#6	14'-0"	⊔
u11	8	#6	10'-3"	⊔
v9	342	#4	8'-3"	—
v10	342	#4	7'-0"	—
v11	48	#4	9'-9"	—
v12	48	#4	9'-0"	—
v13	48	#4	8'-3"	—
v14	318	#4	8'-0"	⌉
v15	320	#4	4'-0"	⌐
Class X Concrete			Cu. Yds	392.0
Reinforcement Bars			Lbs.	27,210
Concrete Piles			Lin. Ft.	1630
Test Piles			Each	1
Name Plates			Each	2

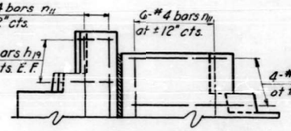

SEC. C-C

PILE DATA
Type Concrete
Capacity 30 Tons
26 @ 34'-0" South Abuts (Includes test pile)
26 @ 30'-0" North Abuts.

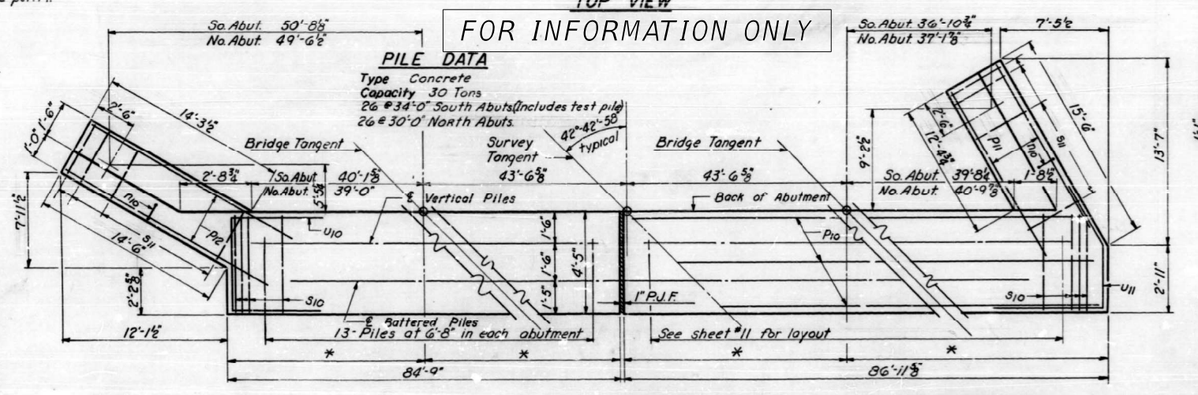

PLAN - PILE CAP

* See sheet 11 for individual [illegible] dimension

DESIGNED	J. B. H.
CHECKED	Norman Rosenwald
DRAWN	J. B. H. W.E. Dickerson
CHECKED	G.R.

SEPT. 22, 1962

EXAMINED	W.E. Baumann, ENGINEER OF BRIDGES AND TRAFFIC STRUCTURES
PASSED	E. Johnson, ENGINEER OF DESIGN
APPROVED	R.R. Bartelsmeyer, CHIEF HIGHWAY ENGINEER

ABUTMENT DETAILS
S.B.I. ROUTE 53
SEC. 551-1-HB-8
COOK COUNTY
STATION 193 + 03.[illegible]

Revised Sheet: In SEC. THRU ABUT. changed dimensions from bottom Pfg. to top P-rced. S.E. from 8'-3½" to 8'-0½", S.W. from 7'-2½" to 7'-1½", N.W. from 7'-5½" to 7'-0½", N.E. from 8'-3½" to 8'-0½" etc.

STATE OF ILLINOIS
DEPARTMENT OF PUBLIC WORKS & BUILDINGS
DIVISION OF HIGHWAYS

S.B.I. 53 / F.A.P. 61	SBI-1-HB-8	Cook	27	21

SHEET NO. 13
SHEETS 15

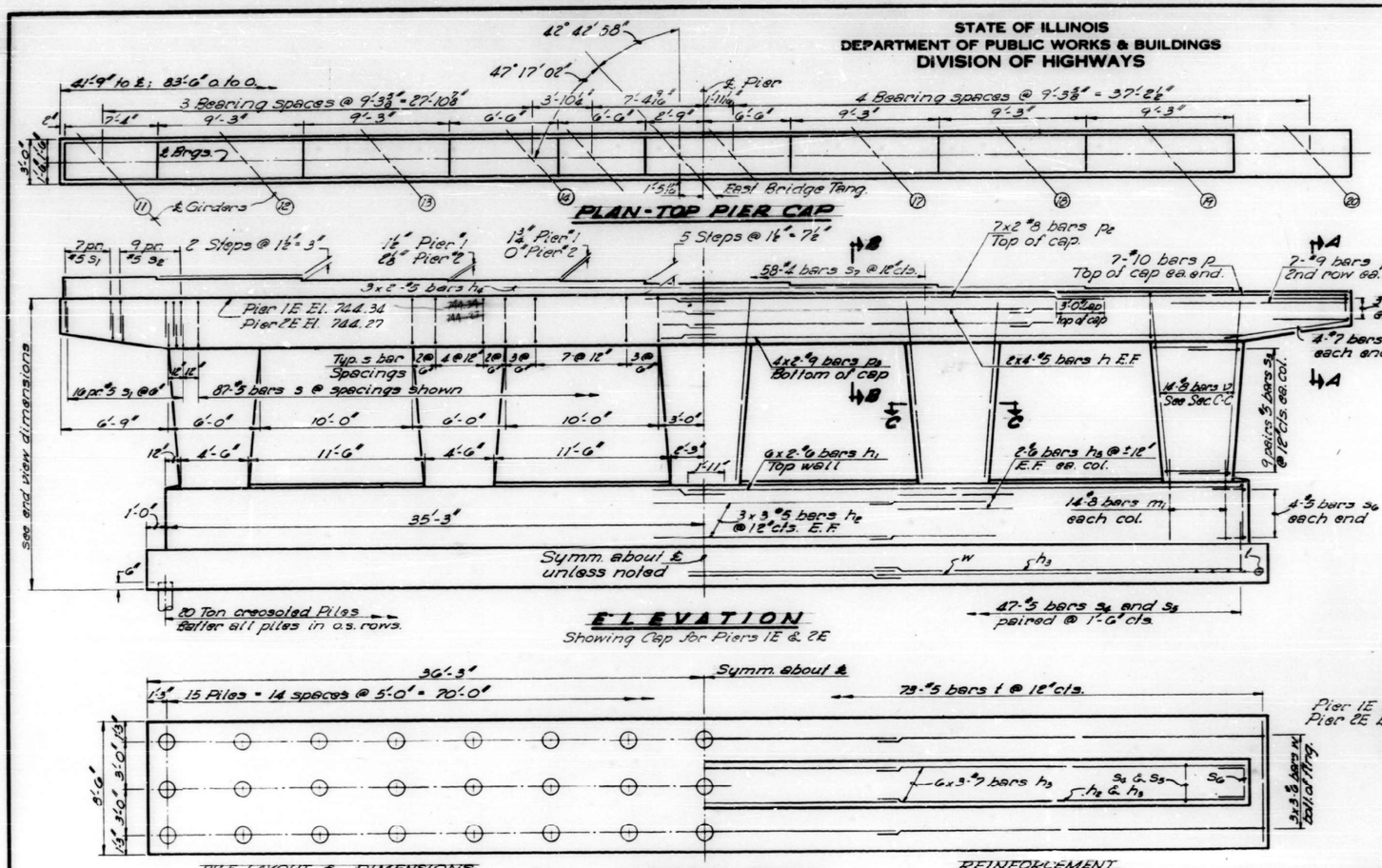

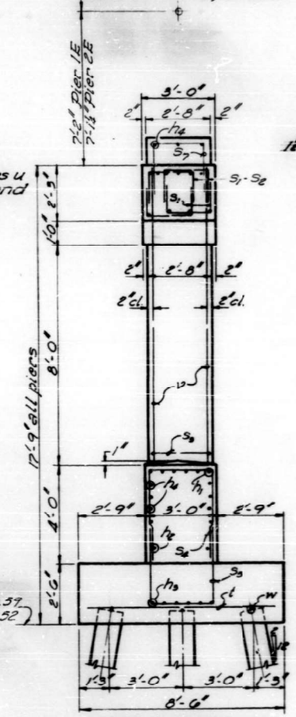

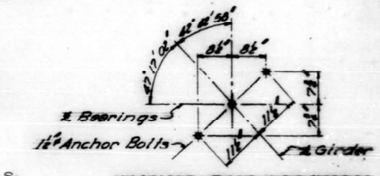

ONE PIER PILE DATA

Type ..... Creosoted
Capacity ..... 20 Tons
Est. Length ..... 36'-0"
No. Req'd. 45

BILL OF MATERIAL - ONE PIER

Bar	No.	Size	Length	Shape
h	16	#5	21'-9"	—
h_1	12	#6	36'-0"	—
h_2	18	#5	28'-3"	—
h_3	18	#7	26'-6"	—
h_4	6	#5	59'-0"	—
h_5	20	#6	7'-0"	—
m_1	70	#8	3'-9"	—
p	14	#10	12'-6"	⌐
p_1	14	#9	11'-0"	—
p_2	14	#8	38'-9"	—
p_3	8	#9	36'-0"	—
p_4	8	#7	8'-6"	—
s	87	#5	12'-2"	⌂
s_1	92	#5	5'-10"	⊓
s_2	36	#5	6'-10"	⊓
s_3	90	#5	9'-0"	⊓
s_4	47	#5	10'-2"	⊓
s_5	47	#5	9'-8"	⊓
s_6	8	#5	6'-9"	⊓
s_7	58	#4	5'-10"	⊓
t	73	#5	8'-3"	—
u	6	#9	12'-9"	⊓
v	70	#8	10'-0"	—
w	9	#6	28'-0"	—
Class X Concrete			Cu. Yds.	142.5
Reinforcement Bars			Lbs.	14,500
Creosoted Piles			Lin. Ft.	1,620

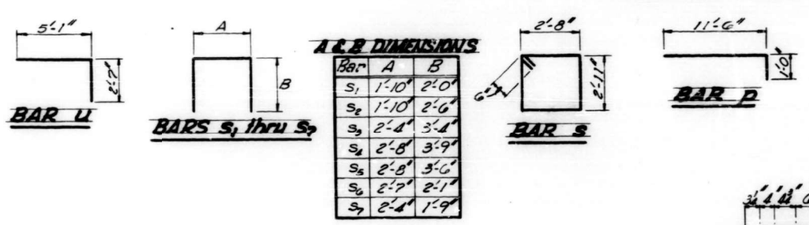

Bar	A	B
s_1	1'-10"	2'-0"
s_2	1'-10"	2'-6"
s_3	2'-4"	3'-4"
s_4	2'-8"	3'-9"
s_5	2'-8"	3'-6"
s_6	2'-7"	2'-1"
s_7	2'-4"	1'-9"

FOR INFORMATION ONLY

Note:
Space reinforcement in cap to miss anchor bolts.
Minimum bar laps = 20 diameters unless otherwise noted.
All edges shall have standard ¾" chamfers except footings.
Pour steps monolithically with cap

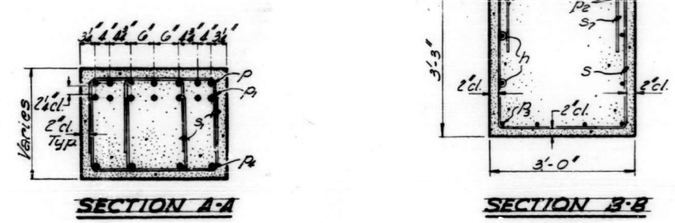

DESIGNED		
CHECKED		
DRAWN	J. Mottenix	
CHECKED	G.R.	

SEPT 22 1962
EXAMINED — Director of Highways and Traffic Engineering
PASSED — Director of Highways
APPROVED — State Highway Engineer

PIERS 1E & 2E
S.B.I. ROUTE 53
SEC. 531-1-HB-8
COOK COUNTY
STATION 193+08.57

STATE OF ILLINOIS
DEPARTMENT OF PUBLIC WORKS & BUILDINGS
DIVISION OF HIGHWAYS

ROUTE NO.	SECTION	COUNTY	TOTAL SHEETS	SHEET NO.
F.A.I. 53 / F.A. 61	531-1-HB-8	Cook	27	22

SHEET NO. 14
SHEETS 15

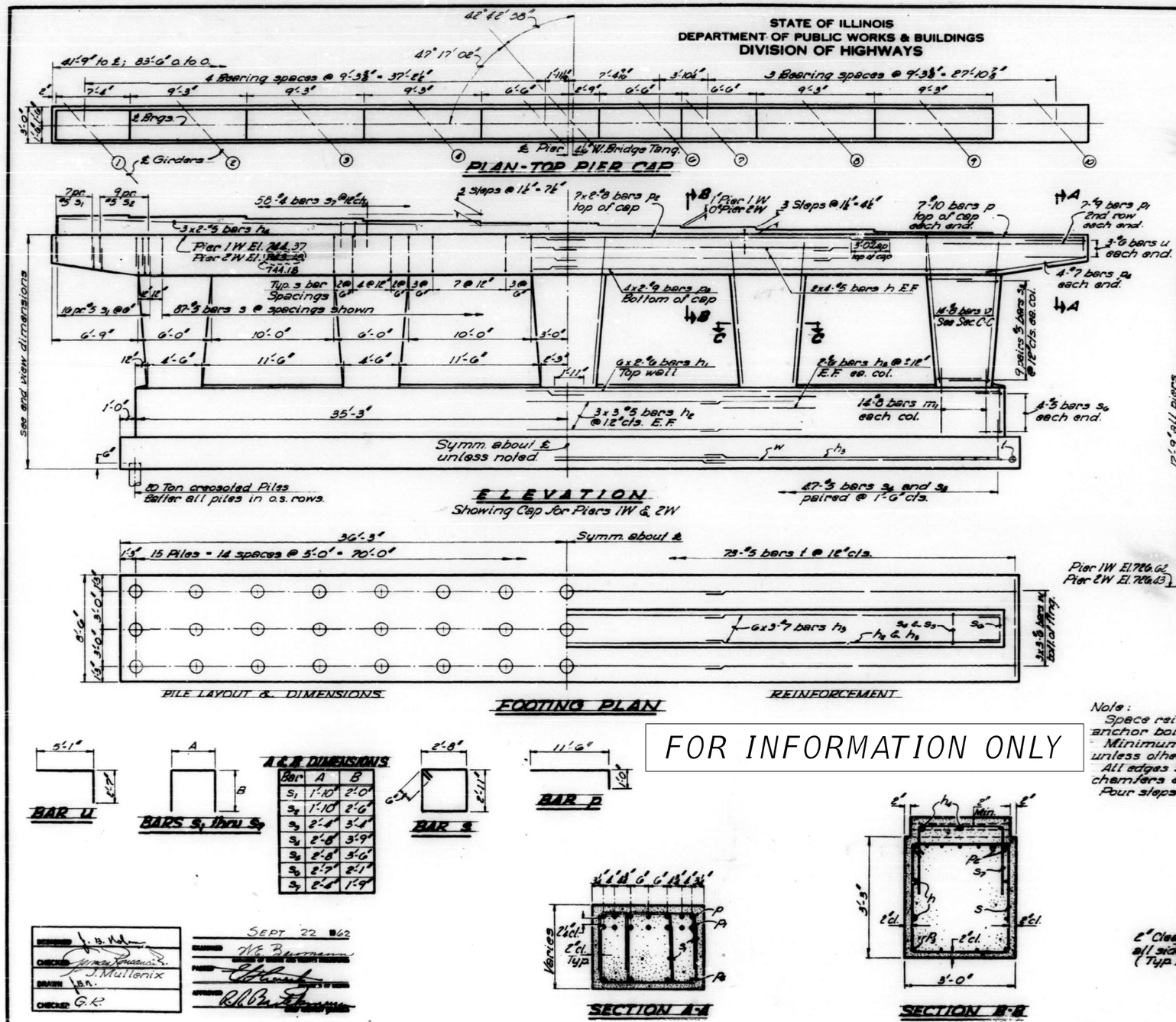

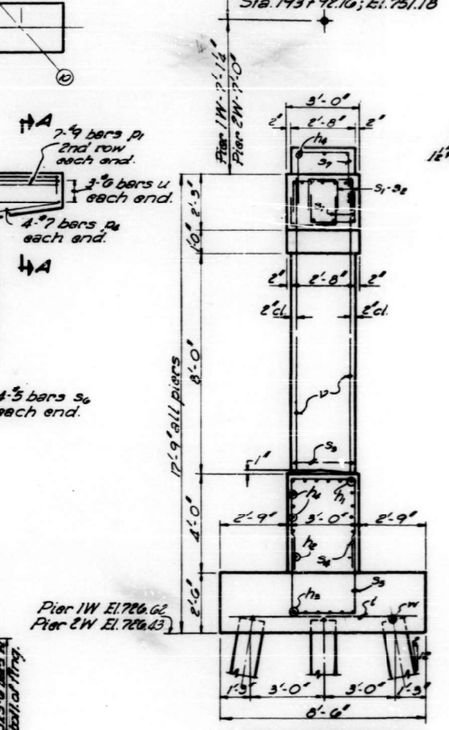

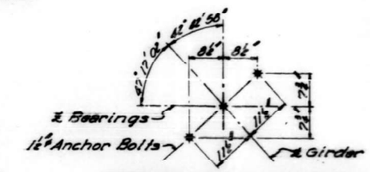

ONE PIER PILE DATA

Type ..... Creosoted
Capacity ..... 20 Tons
Est. Length ..... 36'-0"
No. Req'd. 15
Test Piles ..... 1 (Pier 2W)

BILL OF MATERIAL - ONE PIER

Bar	No.	Size	Length	Shape
h	16	#5	21'-9"	
h_1	18	#6	36'-0"	
h_2	18	#5	24'-3"	
h_3	18	#7	26'-6"	
h_4	6	#5	29'-0"	
h_5	80	#6	7'-0"	
m_1	70	#8	3'-9"	
p	14*	#10	12'-6"	
p_1	14	#9	11'-0"	
p_2	14	#8	32'-9"	
p_3	8	#9	32'-0"	
p_4	8	#7	8'-6"	
s	87	#5	12'-2"	
s_1	92	#5	8'-10"	
s_2	36	#5	6'-10"	
s_3	90	#5	9'-0"	
s_4	47	#5	10'-2"	
s_5	87	#5	9'-8"	
s_6	8	#5	6'-9"	
s_7	38	#4	5'-10"	
t	73	#5	8'-3"	
u	6	#6	12'-9"	
v	70	#8	10'-0"	
w	9	#6	29'-0"	
Class X Concrete			Cu. Yds.	142.5
Reinforcing Steel			Lbs.	14,500
Creosoted Piles			Lin. Ft.	1,680
Test Pile (Timber)			Each	1

* Pier 2W only

FOR INFORMATION ONLY

Note:
Space reinforcement in cap to miss anchor bolts.
Minimum bar laps = 30 diameters unless otherwise noted.
All edges shall have standard ¾" chamfers except footings.
Pour steps monolithically with cap.

A & B DIMENSIONS		
Bar	A	B
S_1	1'-10"	2'-0"
S_2	1'-10"	2'-6"
S_3	2'-4"	3'-4"
S_4	2'-8"	3'-9"
S_5	2'-8"	3'-6"
S_6	2'-7"	2'-1"
S_7	2'-4"	1'-9"

DESIGNED	J. B. Nelson
CHECKED	Norman Rosenwinkel
DRAWN	J. Mullenix B.N.
CHECKED	G.R.

SEPT 22 1962
W. E. Baumann
Chief Highway Engineer

Revised 1/23/63: In ELEVATION changed top of cap elevation Pier 2W from 743.18 to 744.18. W.S.

PIERS 1W & 2W
S.B.I. ROUTE 53
SEC. 531-1-HB-8
COOK COUNTY
STATION 192+82.97

STATE OF ILLINOIS
DEPARTMENT OF TRANSPORTATION
DIVISION OF HIGHWAYS
PLANS FOR PROPOSED FEDERAL AID HIGHWAY

SCALES { PLAN / PROFILE HOR. / PROFILE VERT. / CROSS-SECTIONS

ROUTE: F.A.P. 432 (ILL. RTE. 53) N.B.
SECTION: 531-IHB-8-I-DL(81)
COOK COUNTY
SLT-91-001-81
BRIDGE NO. 016-0376
(N.B. BRIDGE)

FOR INFORMATION ONLY

RTE.	SECTION	COUNTY	TOTAL SHEETS	SHEET NO.
*	*	COOK		

* Route: F.A.P. 432(IL. Rte. 53) N.B.
* Section: 531-IHB-8-I-DL(81)

INDEX OF SHEETS

1. TITLE SHEET, INDEX OF SHEETS AND SUMMARY OF QUANTITIES
2. GENERAL PLAN
3. EXISTING PLAN AND TYPICAL SECTION
4. & 5. ABUTMENT DETAILS
6. TRAFFIC CONTROL & PROTECTION (SPECIAL)-STAGE I
7. TRAFFIC CONTROL & PROTECTION (SPECIAL)-STAGE II
8. DISTRICT ONE: ONE LANE CLOSURE
9. DISTRICT ONE: TWO LANE CLOSURE
10. TRAFFIC CONTROL & PROTECTION CASE U-2 (MOD.)

ATTACHED STANDARDS

2298-5
2299-8
2300-2

SUMMARY OF QUANTITIES

CODE	ITEM	UNIT	QUANT.
406008	BIT. CONC. SURF. CRS., CL. I	TON	116
501024	CONCRETE REMOVAL	C.Y.	24.8
503004	PROTECTIVE COAT	S.Y.	37
504003	CLASS X CONCRETE	C.Y.	24.8
512001	REINFORCEMENT BARS	LBS.	2240
617010	BITUMINOUS CONCRETE SURFACE REMOVAL	S.Y.	820
710150	DECK SLAB REPAIRS (FULL DEPTH)	S.Y.	2
710151	DECK SLAB REPAIRS (PARTIAL DEPTH)	S.Y.	10
[illegible]	DISTRICT ONE: ONE LANE CLOSURE	L.S.	1
[illegible]	TRAF. CONT. AND PROT. (SPECIAL)	L.S.	1
[illegible]	TRAF. CONT. AND PROT. CASE U-2 (MOD.)	L.S.	1

PALATINE TWN.

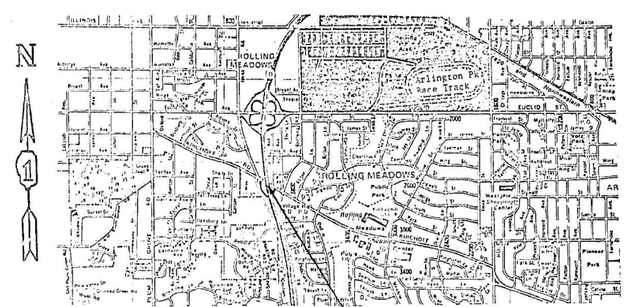

NET LENGTH IMPROVEMENT=373'-2 1/2"
(0.071 MI.)

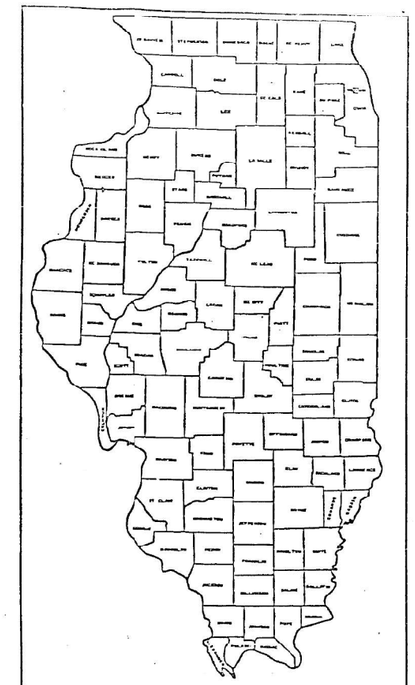

LOCATION OF SECTION INDICATED THUS: —

STATE OF ILLINOIS
DEPARTMENT OF TRANSPORTATION
DIVISION OF HIGHWAYS

SUBMITTED _____ 19__
DISTRICT ENGINEER
ENGINEER OF PLANS AND CONTRACTS
ENGINEER OF DESIGN
DIRECTOR APPROVED BY DIRECTOR

J.U.L.I.E. TOLL FREE PHONE: 800-892-0123

CONTRACT NO.

COOK COUNTY SECTION: 531-IHB-8-DL(80) ROUTE: F.A.P. 432 (ILL. RTE. 53) N.B.

L. L. SHIAK

MODEL: Default
FILE NAME: S:\OL\6300-639\63461113\Drawings\CAD\Micros-Sst\CAD_Sheets\016037611 21-C3-071-EX-SAI.dgn

STRAND ASSOCIATES
1170 SOUTH HOUBOLT ROAD
JOLIET, ILLINOIS 60431
(815) 744-4200
IDFPR NO. 184-001273

USER NAME = codyh	DESIGNED -	REVISED -	
	CHECKED -	REVISED -	
PLOT SCALE = 0:2.0000 ':" / in.	DRAWN - CJH	REVISED -	
PLOT DATE = 9/20/2024	CHECKED - TJE	REVISED -	

STATE OF ILLINOIS
DEPARTMENT OF TRANSPORTATION

EXISTING DRAWINGS (5 OF 6)
STRUCTURE NO. 016-0376 (NB) AND 016-1121 (SB)

F.A.P. RTE.	SECTION	COUNTY	TOTAL SHEETS	SHEET NO.
342	(531) BR 23	COOK	1211	756
		CONTRACT NO. 62W38		
		ILLINOIS	FED. AID PROJECT	

9/20/2024 3:13:35 PM

ROUTE	SECTION	COUNTY	TOTAL SHEETS	SHT. NO.
FAP 432 (ILL 53)	531-1HB-8-I-OL(A)	COOK	10	2

FOR INFORMATION ONLY

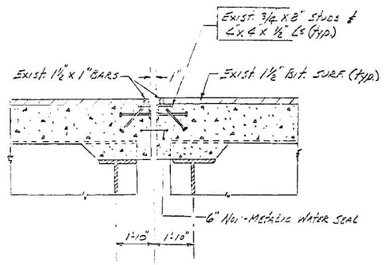

SEC. B-B Exist. Transverse Joint
(FOR INFORMATION ONLY)

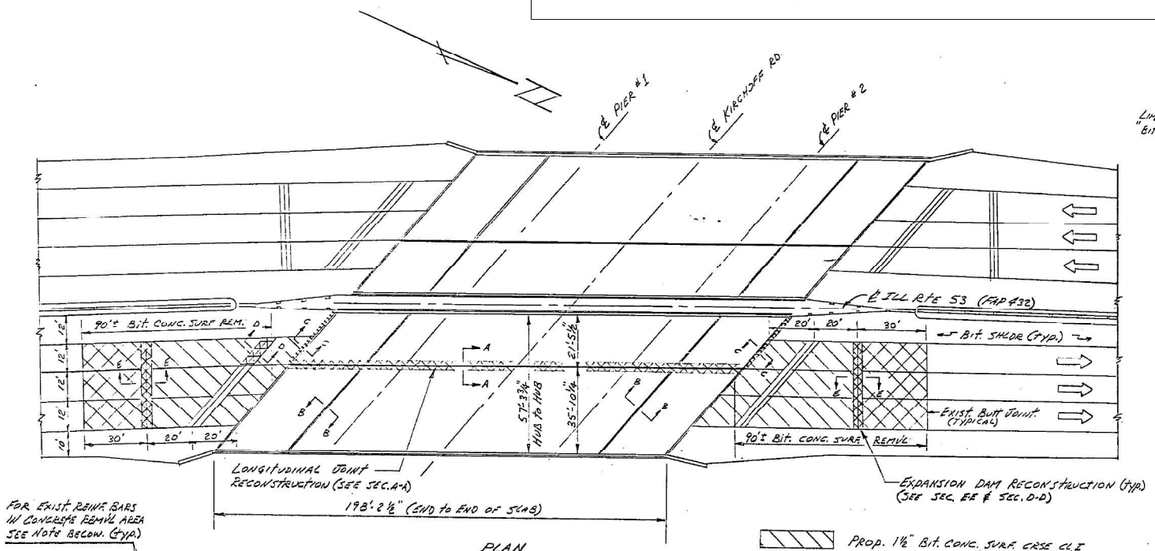

PLAN

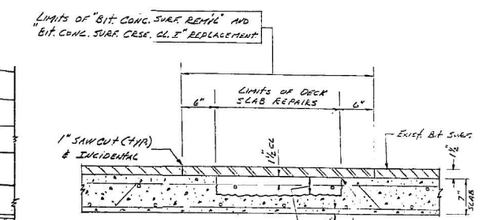

Note: If deteriorated conc. extends below a max. depth of 3 1/2" from the top of the deck, the conc. shall be removed for the full depth of the deck and a full depth patch shall be constructed.
Exist. reinf. in the conc. removal areas shall be cleaned of rust and old concrete prior to placing new concrete.
Seal the perimeter of all deck patches with hot poured joint sealer (incidental).

DECK SLAB REPAIR DETAILS

Prop. 1 1/2" Bit. Conc. Surf. Crse Cl I

Prop Bit. Conc. Taper, 1" per 20 ft. to Exist. Butt Jt.

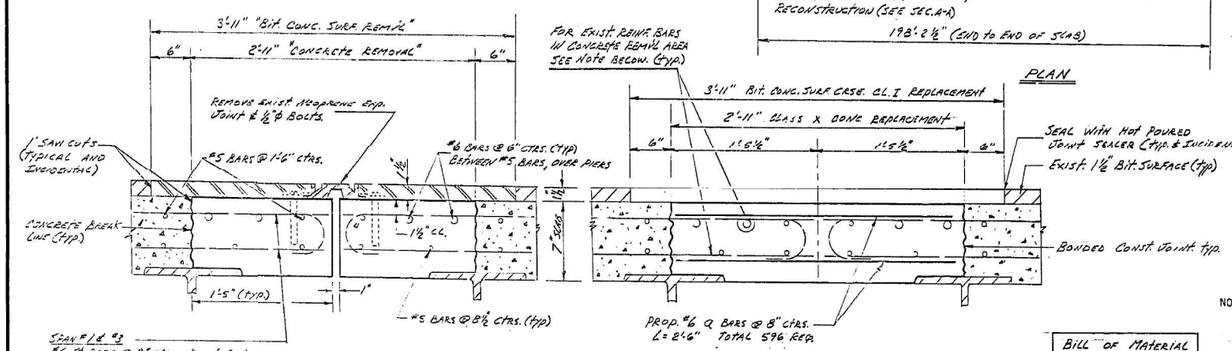

Exist. Long. Joint

Prop. Longitudinal Joint

NOTE: ALL EXIST. TRANSVERSE REINF. BARS IN THE CONCRETE REMOVAL AREA SHALL REMAIN IN PLACE AND SHALL BE THOROUGHLY CLEANED OF RUST AND OLD CONCRETE PRIOR TO PLACING THE CLASS X CONCRETE.

EXISTING LONGITUDINAL REINF. BARS IN THE CONCRETE REMOVAL AREA SHALL BE SALVAGED, CLEANED AND INCORPORATED INTO THE NEW CONCRETE.

SECTION A-A

Bill of Material for Longitudinal Jt.			
Bar	No.	Size	Length
Q	596	#6	2'-6"
Reinf. Bars - 2240#			
Conc. Remvl - 18 C.Y.			
Cl X Conc. - 18 C.Y.			

NOTE: CLEANING OF EXISTING REINF. BARS THAT ARE TO REMAIN IN PLACE SHALL BE BY A METHOD APPROVED BY THE ENGINEER.

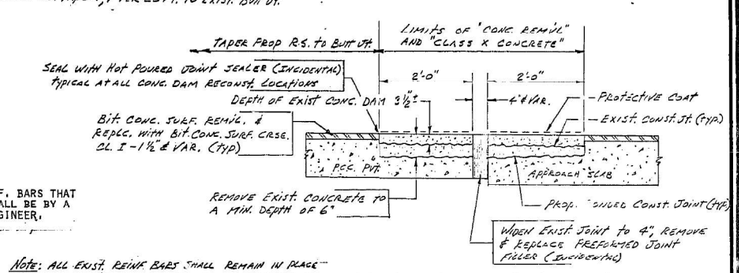

Note: All exist. reinf. bars shall remain in place & shall be thoroughly cleaned of rust and old concrete prior to placing the class X concrete. "Concrete Removal" & "Class X Concrete" is est. to be 6.25 cu.yds. each to repair the conc. dams as shown in Sec. E-E and Sec. D-D, and in the plan view.

SEC. E-E Expansion Joint Reconstruction

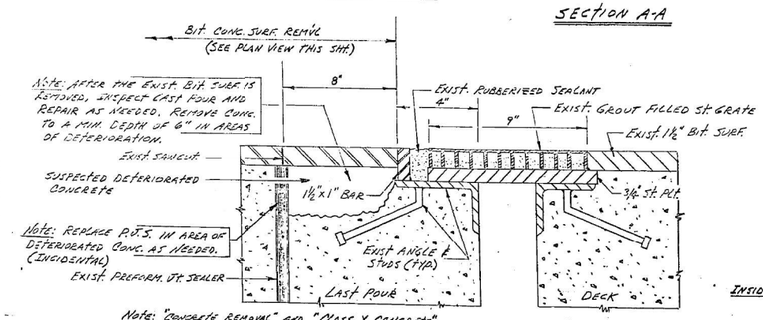

Note: After the Exist. Bit. Surf. is removed, inspect cast pour and repair as needed. Remove conc. to a min. depth of 6" in areas of deterioration.

Note: Replace P.J.S. in area of deteriorated conc. as needed. (Incidental)

Note: "Concrete Removal" and "Class X Concrete" is est. to be 0.5 c.y. each to repair last pour at both abutments as indicated.

SEC. C-C Exist. Sliding Plate Joint @ Abutments

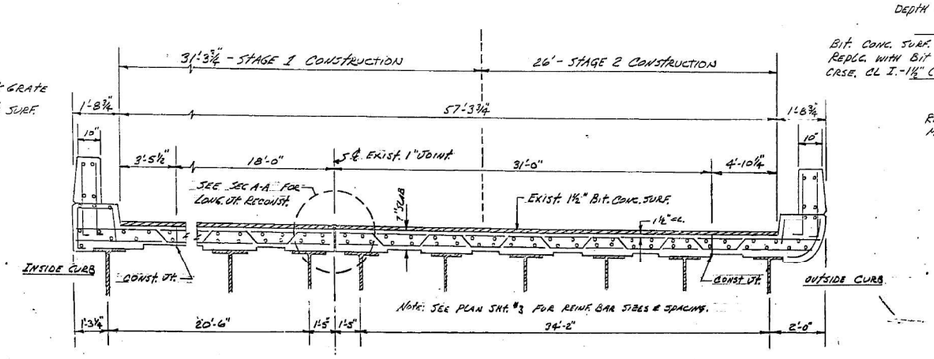

Note: See plan sht. #3 for reinf. bar sizes & spacing.

Typical Section: North Bound Bridge B.R. #016-0376

Typical Section: Inbound Bridge

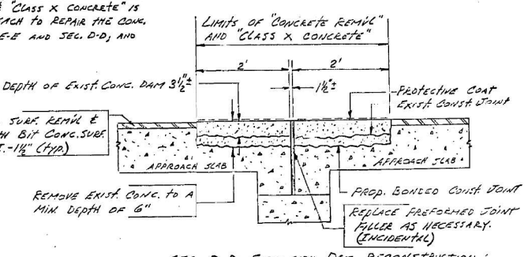

SEC. D-D Expansion Dam Reconstruction

GENERAL PLAN
F.A.P. Rte. 432 (Ill. Rte 53)
Sec. (531) 1HB-8-I-OL(A)
Cook Co.
Ill. Rte 53-N.B. Bridge over Kirchoff Rd

STRAND ASSOCIATES
1170 SOUTH HOUBOLT ROAD
JOLIET, ILLINOIS 60431
(815) 744-4200
IDFPR NO. 184-001273

USER NAME = codyh	DESIGNED -	REVISED -	
	CHECKED -	REVISED -	
PLOT SCALE = 0:2.0000 ':" / in.	DRAWN - CJH	REVISED -	
PLOT DATE = 9/20/2024	CHECKED - TJE	REVISED -	

STATE OF ILLINOIS
DEPARTMENT OF TRANSPORTATION

EXISTING DRAWINGS (6 OF 6)
STRUCTURE NO. 016-0376 (NB) AND 016-1121 (SB)

F.A.P. RTE.	SECTION	COUNTY	TOTAL SHEETS	SHEET NO.
342	(531) BR 23	COOK	1211	757
		CONTRACT NO. 62W38		
		ILLINOIS	FED. AID PROJECT	

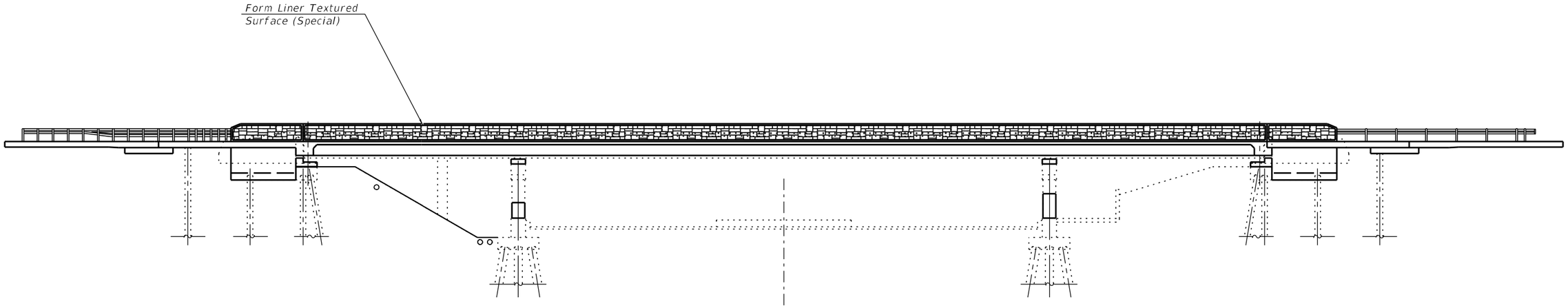

ELEVATION
(Looking East)

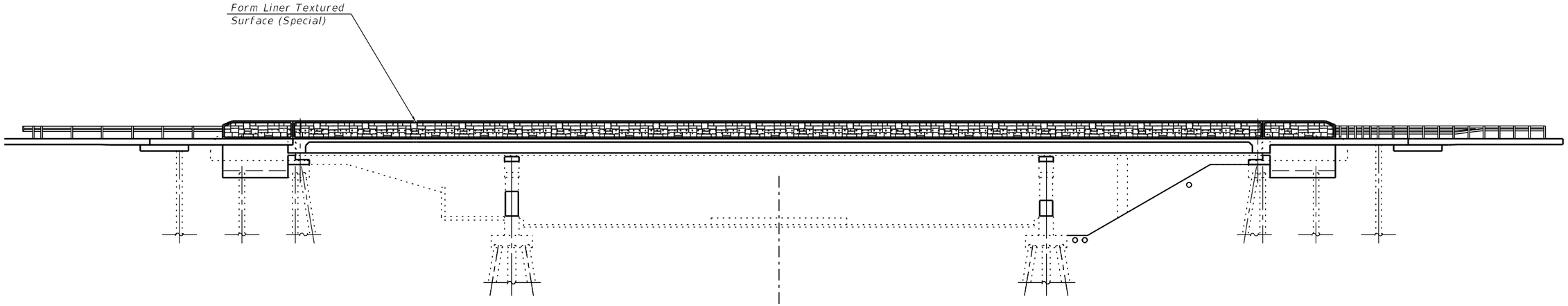

ELEVATION
(Looking West)

Notes:
1. For parapet dimensions not shown, see Bridge Plans.
2. Concrete Color Additive to be incorporated into Superstructure Concrete for all parapet locations receiving Form Liner Treatment.

MODEL: Default
FILE NAME: S:\IDL\6300-6399\6346\113\Drawings\CAD\Micros-SS4\Exhibits\Aesthetic Exhibit_03_SN 016_1121SB_016_0376NB Kirchoff\0161121-0160376-C3-Bridge-Parapet01.dgn

9/20/2024 3:53:21 PM

STRAND ASSOCIATES®
1170 SOUTH HOUBOLT ROAD
JOLIET, ILLINOIS 60431
(815) 744-4200
IDFPR NO. 184-001273

USER NAME = codyh	DESIGNED -	REVISED -	
	CHECKED -	REVISED -	
PLOT SCALE = 0:2.0000 ':" / in.	DRAWN - ZHH	REVISED -	
PLOT DATE = 9/20/2024	CHECKED - NDR	REVISED -	

STATE OF ILLINOIS
DEPARTMENT OF TRANSPORTATION

BRIDGE AESTHETIC PLAN
STRUCTURE NO. 016-0376 (NB) AND 016-1121 (SB)

F.A.U. RTE.	SECTION	COUNTY	TOTAL SHEETS	SHEET NO.
342	(531) BR 23	COOK	1211	758
		CONTRACT NO. 62W38		
	ILLINOIS	FED. AID PROJECT		

Benchmark: BM32 - Cut cross on the southeast corner of concrete sign foundation. Sta. 1261+53.83, 62.64' Left, Elev. 738.987.

Existing Structures: Structure Numbers 016-0375 (NB) and 016-1120 (SB) were originally built in 1963 as FA Route 61 under Section 531-2-HB-1. In 1971, the deck was patched and a bituminous overlay was applied. In 1991, the joints and parapets were reconstructed, along with deck patching and overlay replacement. In 2000, the abutment bearings were replaced. In 2010, the joints were replaced and repairs were made to the deck and abutments. The existing structures consist of three span continuous non-composite steel beam superstructures supported on multi-column piers and stub abutments. Along the local tangent, the bridge measures 155'-6" back to back abutments with a 34°55'00" right forward skew. The out to out deck width is 58'-11".

Traffic Control: Traffic is to be maintained utilizing staged construction.

No Salvage.

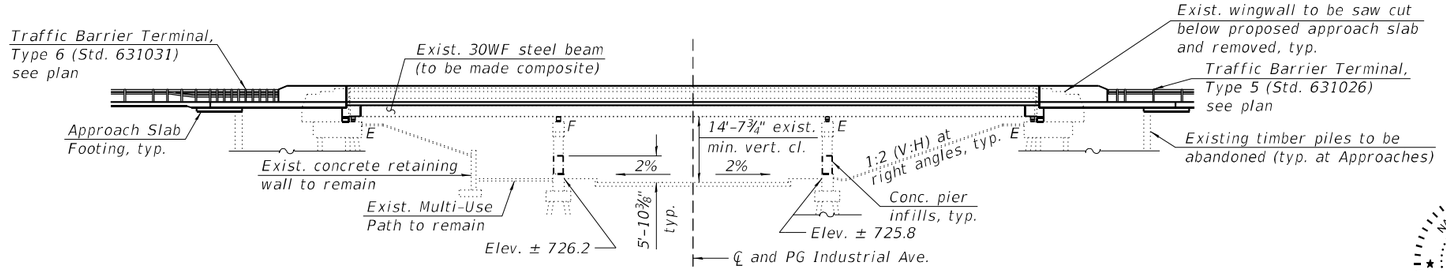

ELEVATION

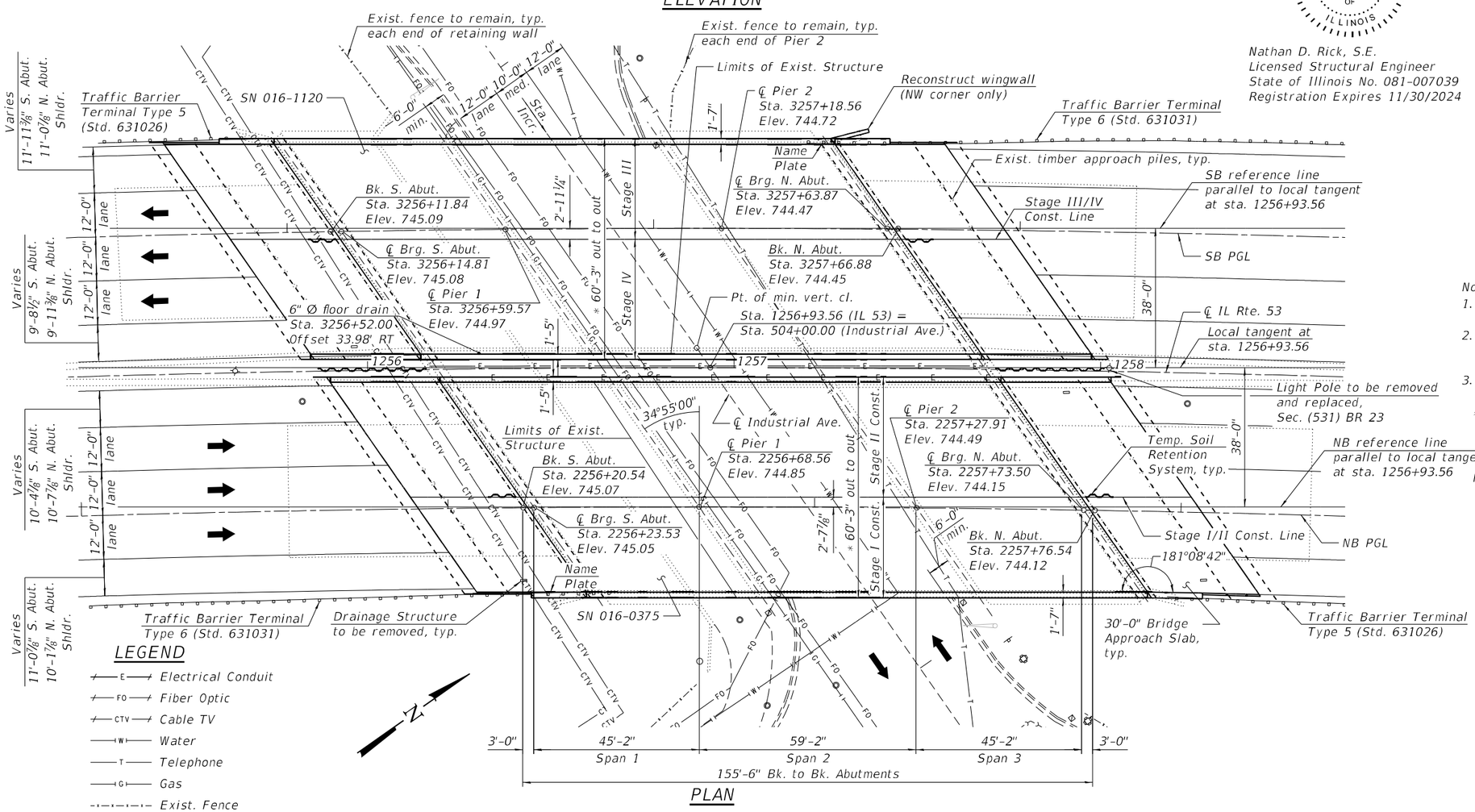

PLAN

LEGEND

- Electrical Conduit
- Fiber Optic
- Cable TV
- Water
- Telephone
- Gas
- Exist. Fence

STA. 1256+93.56 RE-BUILT 202X BY STATE OF ILLINOIS F.A.P. RTE. 342 (IL-53) SEC. (531) BR 23 LOADING HS20-44 STR. NO. 016-0375	STA. 1256+93.56 RE-BUILT 202X BY STATE OF ILLINOIS F.A.P. RTE. 342 (IL-53) SEC. SEC. (531) BR 23 LOADING HS20-44 STR. NO. 016-1120

NAME PLATE

(See Std. 515001 and Note 3)

DESIGN SPECIFICATIONS

2002 AASHTO Standard Specifications for Highway Bridges, 17th Edition (Existing Construction)

2020 AASHTO LRFD Bridge design Specifications, 9th edition (New Construction)

2006 Seismic Retrofitting Manual for Highway Structures: Part 1 - Bridges (FHWA-HRT-06-032)

EXISTING CONSTRUCTION LOADING HS20-44

NEW CONSTRUCTION LOADING HL-93

Allow 25#/sq. ft. for future wearing surface

NATHAN D. RICK 081-005819 LICENSED STRUCTURAL ENGINEER OF ILLINOIS

Nathan D. Rick, S.E.
Licensed Structural Engineer
State of Illinois No. 081-007039
Registration Expires 11/30/2024

SEISMIC DATA

Seismic Retrofit Category (SRC) = A
Design Spectral Acceleration at 1.0 sec. (SD1) = 0.082g
Design Spectral Acceleration at 0.2 sec. (SDS) = 0.143g
Soil Site Class = D
Performance Level = PL 1

DESIGN STRESSES

FIELD UNITS (NEW CONSTRUCTION)
f'c = 4,000 psi (Superstructure)
f'c = 3,500 psi (Substructure)
fy = 60,000 psi (Reinforcement)

FIELD UNITS (EXISTING CONSTRUCTION)
fc = 1,400 psi (Substructure)
fs = 20,000 psi (Reinforcement)
fs = 20,000 psi (Structural Steel)

Notes:
1. Up to ¼" to be ground off the bridge deck and the bridge approach slabs.
2. All transverse dimensions are radial and all longitudinal dimensions are measured along the local tangent, unless noted otherwise.
3. Existing Name Plates shall be cleaned and relocated next to the new Name Plates. Cost included with Name Plates.

* at right angles to local tangent

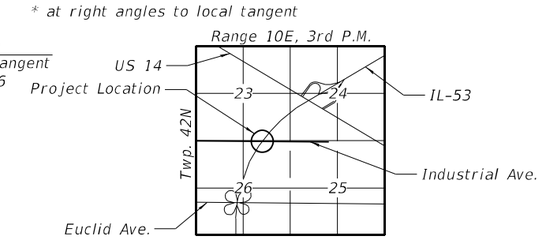

LOCATION SKETCH

GENERAL PLAN AND ELEVATION
IL RTE. 53 OVER INDUSTRIAL AVENUE
FAP RTE. 342 - SEC. (531) BR 23
COOK COUNTY
STATION 1256+93.56
STRUCTURE NO. 016-0375 (NB)
STRUCTURE NO. 016-1120 (SB)

STRAND ASSOCIATES
1170 SOUTH HOUBOLT ROAD
JOLIET, ILLINOIS 60431
(815) 744-4200
IDFPR NO. 184-001273

USER NAME = codyh	DESIGNED - TJE	REVISED -	
	CHECKED - KRB	REVISED -	
PLOT SCALE = 0:2.0000 ':" / in.	DRAWN - CJH	REVISED -	
PLOT DATE = 9/20/2024	CHECKED - TJE	REVISED -	

STATE OF ILLINOIS
DEPARTMENT OF TRANSPORTATION

GENERAL PLAN AND ELEVATION
STRUCTURE NO. 016-0375 (NB) AND 016-1120 (SB)

SHEET 1 OF 48 SHEETS

F.A. RTE.	SECTION	COUNTY	TOTAL SHEETS	SHEET NO.
342	(531) BR 23	COOK	1211	759
		CONTRACT NO. 62W38		
	ILLINOIS	FED. AID PROJECT		

MODEL: Default
FILE NAME: S:\IOL6300-6399\6246\113\Drawings\CAD\Micros-SS4\CAD_Sheets\0160375\1120-62W38-001-GPE.dgn
9/20/2024 2:14:06 PM

GENERAL NOTES

1. Fasteners shall be ASTM F 3125 Grade A325 Type 1, mechanically galvanized bolts in painted areas. Bolts ¾ in. diameter, holes ⅞ in. diameter, unless otherwise noted.
2. Calculated weight of Structural Steel = 16,950 lbs (Grade 36).
3. No field welding in permitted except as specified in the contract documents.
4. The Contractor shall test the existing welds by non-destructive methods within 2 ft. of the end of the existing cover plates for cracks after removal of the existing concrete deck. Dye penetrant (PT), magnetic particle (MT), or other approved testing method shall be performed by qualified personnel approved by the Engineer. If cracks are found, report them to the Bureau of Bridges & Structures for disposition. The cost of testing is included in Removal of Existing Concrete Deck. The cost of crack repair, if necessary, will be paid for according to Article 109.04 of the Standard Specifications.
5. Reinforcement bars designated (E) shall be epoxy coated.
6. Prior to pouring the new concrete deck, all heavy or loose rust, loose mill scale, and other loose detrimental foreign material shall be removed from the surfaces in contact with concrete(SSPC – SP3 standards). Tightly adhered paint may remain unless otherwise noted. Removal shall be accomplished by methods that will not damage the steel and the cost will be paid for according to Article 109.04 of the Standard Specifications.

   As directed by the Engineer, existing construction accessories welded to the top flange of beams and girders shall be removed. The weld areas shall be ground flush and inspected for cracks using magnetic particle testing (MT) or dye penetrant testing (PT) by qualified personnel approved by the Engineer. Any cracks that cannot be removed by grinding ¼ in. deep shall be identified and reported to the Bureau of Bridges & Structures for further disposition. The cost of removing welded accessories, grinding and inspecting weld areas and grinding cracks will be paid for according to Article 109.04 of the Standard Specifications.
7. If the Contractor elects to use cantilever forming brackets on the exterior beams or girders, the brackets shall be placed at the same locations as required for the hardwood blocks in Article 503.06(b) of the Standard Specifications. If additional cantilever forming brackets are required, hardwood blocking shall be wedged between the exterior and first interiorbeam at each of these additional bracket locations.
8. Plan dimensions and details relative to the existing structure have been taken from existing plans are subject to nominal construction variations. The Contactor shall field verify existing dimensions and details affecting new construction and make necessary approved adjustments prior to construction or ordering of materials. Such variations shall not be cause for additional compensation for a change in scope of the work, however, the Contractor will be paid for the quantity actually furnished at the unit price bid for the work.
9. Cleaning and field painting of existing structural steel shall be done under a separate painting contract.
10. The existing structural steel coating contains lead. The Contractor shall take appropriate precautions to address the presence of lead on this project.
11. Concrete surfaces that are to recieve the textured form liner treatment shall also be tinted according to the special provision for "Concrete Color Additive". The revealed and exposed formed textured surface shall receive the application of "Concrete Sealant, Special".

INDEX OF SHEETS

1	General Plan & Elevation
2	General Notes & Total Bill of Materials
3-4	Construction Staging
5	Temporary Concrete Barrier
6	Top of Deck Slab Elevation Layout
7-11	Top of Deck Slab Elevation
12-15	Top of Approach Slab Elevations
16	Deck Plan and Cross Section (NB)
17	Deck Plan and Cross Section (SB)
18	Deck & Parapet Details
19-20	Semi-Integral Diaphragm
21	Semi-Integral Details
22-23	Approach Slab Plan (NB)
24	Approach Slab Cross Section (NB)
25-26	Approach Slab Plan (SB)
27	Approach Slab Cross Section (SB)
28	Approach Slab Details
29	Framing Plan
30	Girder Elevations & Details
31	Expansion Bearings Details
32	Fixed Bearing Details
33	Concrete Removal/Repair South Abutment (NB)
34	Concrete Removal/Repair North Abutment (NB)
35	Concrete Removal/Repair South Abutment (SB)
36	Concrete Removal/Repair North Abutment (SB)
37	Abutment Plan & Elevation South (NB)
38	Abutment Plan & Elevation North (NB)
39	Abutment Plan & Elevation South (SB)
40	Abutment Plan & Elevation North (SB)
41	NB Pier Modifications (NB)
42	SB Pier Modifications (SB)
43	Slope Wall Repair (NB)
44	Slope Wall Repair (SB)
45	Concrete Parapet Slip Forming Option
46	Bar Splicer Details
46A	Median Sliding Plate
47-48	Soil Borings

INDEX OF SHEETS

Item	Unit	Super	Sub	Total
Concrete Removal	CU YD		83.7	83.7
Removal of Existing Concrete Deck No. 1	EACH	1		1
Removal of Existing Concrete Deck No. 2	EACH	1		1
Protective Shield	SQ YD	2,083		2,083
Structure Excavation	CY YD		1,334	1,334
Floor Drains	EACH	1		1
Concrete Structures	CU YD		181.3	181.3
Concrete Superstructure	CU YD	709.2		709.2
Protective Coat	SQ YD	3,085		3,085
Concrete Superstructure (Approach Slab)	CU YD	331.6		331.6
Furnishing and Erecting Structural Steel	POUND		16,950	16,950
Stud Shear Connectors	EACH	15,174		15,174
Reinforcement Bars, Epoxy Coated	POUND	311,880	8,330	320,210
Bar Splicers	EACH	1,594		1,594
Mechanical Splicers	EACH	44	8	52
Name Plates	EACH	2		2
Elastomeric Bearing Assembly, Type I	EACH	54		54
Anchor Bolts, 1"	EACH	108		108
Anchor Bolts, 1 1/4"	EACH	36		36
Temporary Soil Retention System	SQ FT		656	656
Granular Backfill for Structures	CY YD		1,108	1,108
Concrete Sealer	SQ FT		3,234	3,234
Geocomposite Wall Drain	SQ YD		466	466
Pipe Underdrains for Structures 4"	FOOT		372	372
Slope Wall Crack Sealing	FOOT		442	442
Concrete Color Additive	CY YD	59.6		59.6
Bridge Deck Grooving (Longitudinal)	SQ YD	2,578		2,578
Form Liner Textured Surface (Special)	SQ YD	1,229		1,229
Bar Terminators	EACH	812		812
Architectural Form Liner	SQ YD	8		8
Jack and Remove Existing Bearings	EACH		72	72
Cleaning Bridge Seats	SQ FT		1,545	1,545
Structural Repair of Concrete (Depth Equal to or Less Than 5 Inches)	SQ FT		152	152
Diamond Grinding (Bridge Section)	SQ YD	2,532		2,532
Slope Wall Repair	SQ YD		17	17
Concrete Sealant (Special)	SQ YD	111		111

CURVE DATA

IL 53 SB PGL	Centerline IL 53	IL 53 NB PGL
Exist. Curve IL53_PGL_SB_7	Exist. Curve IL53_EAL_7	Exist. Curve IL53_PGL_NB_7
P.I. Sta. = 3246+07.81	P.I. Sta. = 1245+92.84	P.I. Sta. = 2245+77.88
Δ = 27° 21' 00" (Rt)	Δ = 27° 21' 00" (Rt)	Δ = 27° 21' 00" (Rt)
D = 0° 56' 56"	D = 0° 57' 18"	D = 0° 57' 40"
R = 6,038.00'	R = 6,000.00'	R = 5,962.00'
T = 1,469.11'	T = 1,459.87'	T = 1,450.62'
L = 2,882.22'	L = 2,864.08'	L = 2,845.94'
E = 176.16'	E = 175.05'	E = 173.94'
P.C. Sta. = 3231+38.69	P.C. Sta. = 1231+32.97	P.C. Sta. = 2231+27.26
P.T. Sta. = 3260+20.91	P.T. Sta. = 1259+97.06	P.T. Sta. = 2259+73.20
SE = 2.0%	SE = 2.0%	SE = 2.0%

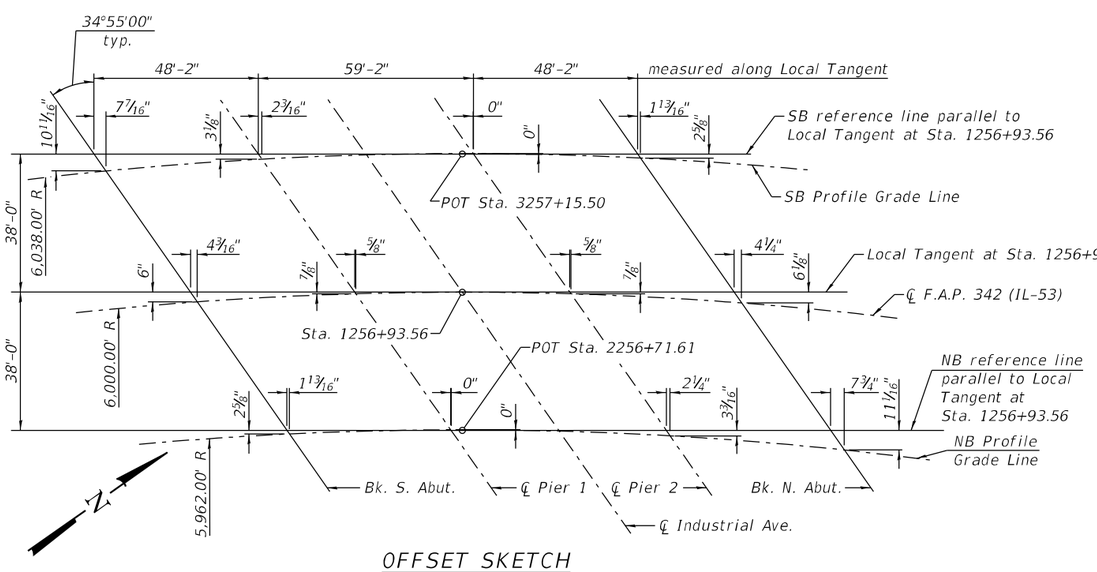

OFFSET SKETCH

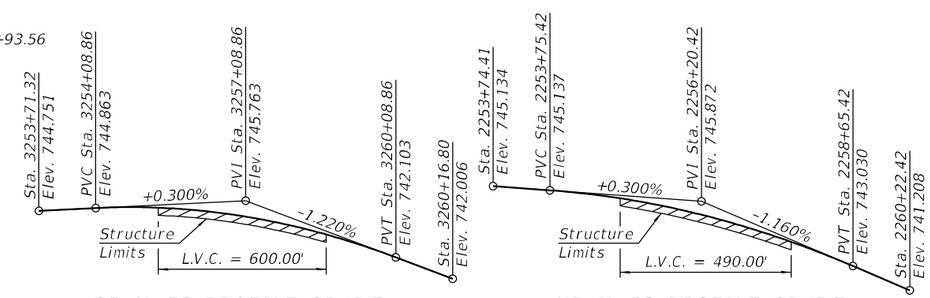

SB IL 53 PROFILE GRADE

NB IL 53 PROFILE GRADE

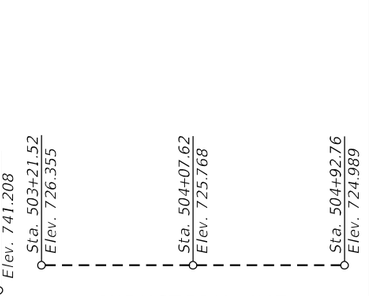

INDUSTRIAL AVE. PROFILE GRADE

Note:
The IL 53 Profile Grades show the final grade after grinding.

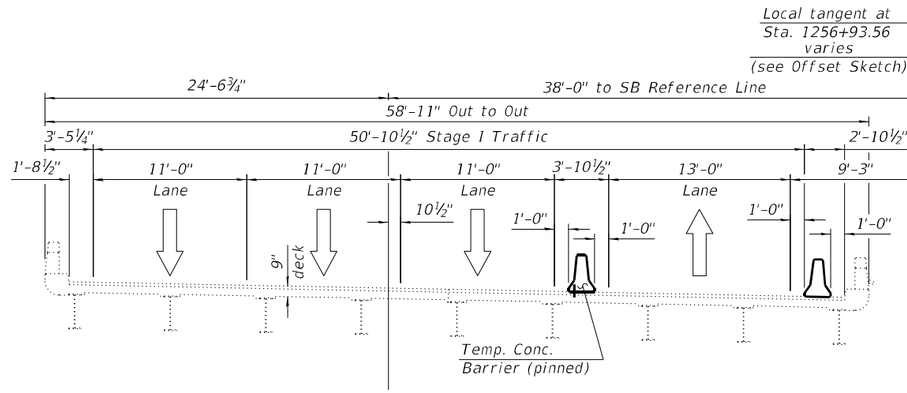

STAGE I TRAFFIC SB

(SN 016-1120)

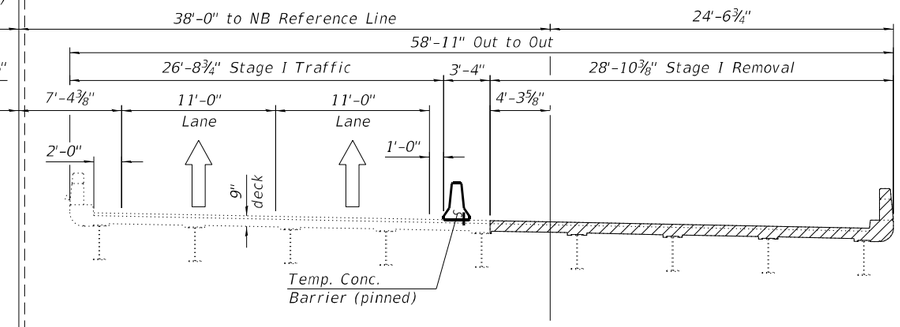

STAGE I TRAFFIC AND REMOVAL NB

(SN 016-0375)

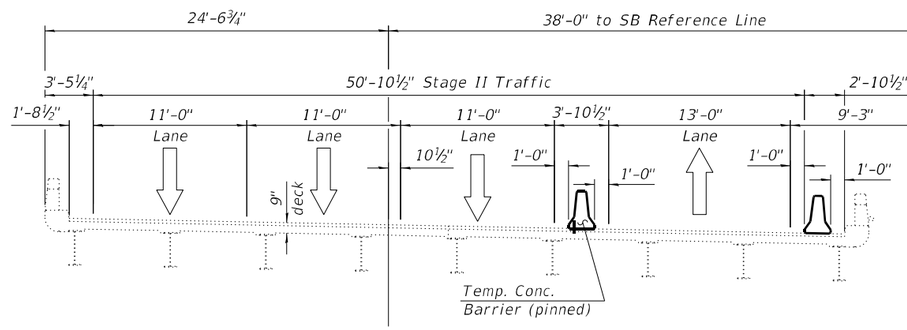

STAGE II TRAFFIC SB

(SN 016-1120)

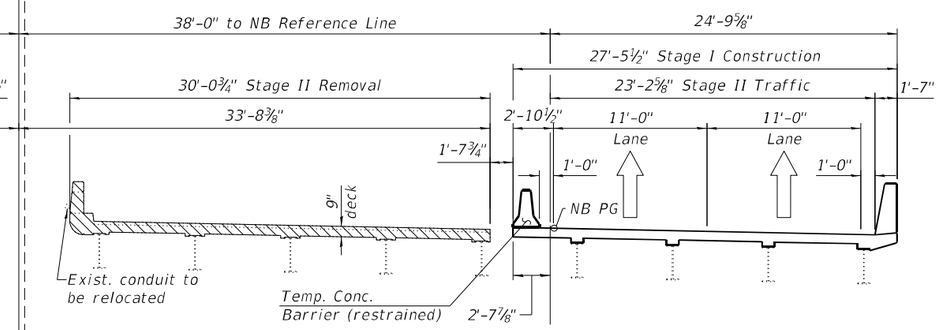

STAGE I CONSTRUCTION AND II TRAFFIC AND REMOVAL NB

(SN 016-0375)

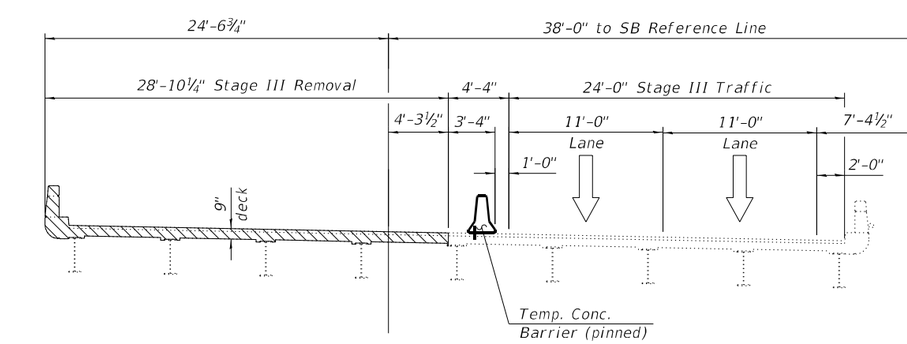

STAGE III TRAFFIC AND REMOVAL SB

(SN 016-1120)

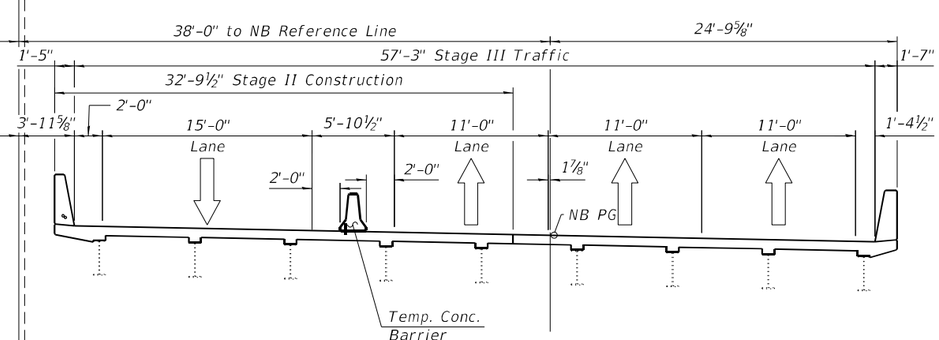

STAGE II CONSTRUCTION AND STAGE III TRAFFIC NB

(SN 016-0375)

Notes:

1. Hatching represents limits of Removal.
2. All sections are looking north.
3. All transverse dimensions are at right angles to the local tangent.
4. Existing transverse dimensions are based on field survey data.
5. For Offset sketch, see sheet 2 of 48.

MODEL: Default
FILE NAME: S:\IOL\6300--6399\63461\113\Drawings\CAD\Micro-Station\CAD_Sheets\0160375120-62W38-003-CS.dgn

STRAND ASSOCIATES
1170 SOUTH HOUBOLT ROAD
JOLIET, ILLINOIS 60431
(815) 744-4200
IDFPR NO. 184-001273

USER NAME = codyh	DESIGNED - TJE	REVISED -	
	CHECKED - KRB	REVISED -	
PLOT SCALE = 0:2.0000 ':" / in.	DRAWN - CJH	REVISED -	
PLOT DATE = 9/20/2024	CHECKED - TJE	REVISED -	

STATE OF ILLINOIS
DEPARTMENT OF TRANSPORTATION

CONSTRUCTION STAGING (1 OF 2)
STRUCTURE NO. 016-0375 (NB) AND 016-1120 (SB)

SHEET 3 OF 48 SHEETS

F.A. RTE.	SECTION	COUNTY	TOTAL SHEETS	SHEET NO.
342	(531) BR 23	COOK	1211	761

CONTRACT NO. 62W38

ILLINOIS | FED. AID PROJECT

9/20/2024 2:14:10 PM

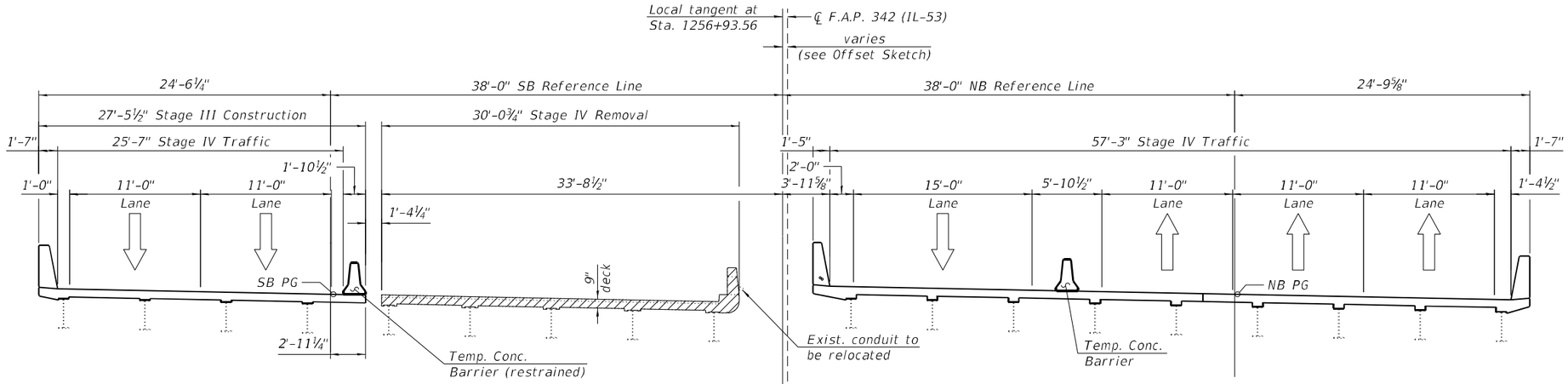

STAGE III CONSTRUCTION AND STAGE IV TRAFFIC AND REMOVAL SB
(SN 016-1120)

STAGE IV TRAFFIC NB
(SN 016-0375)

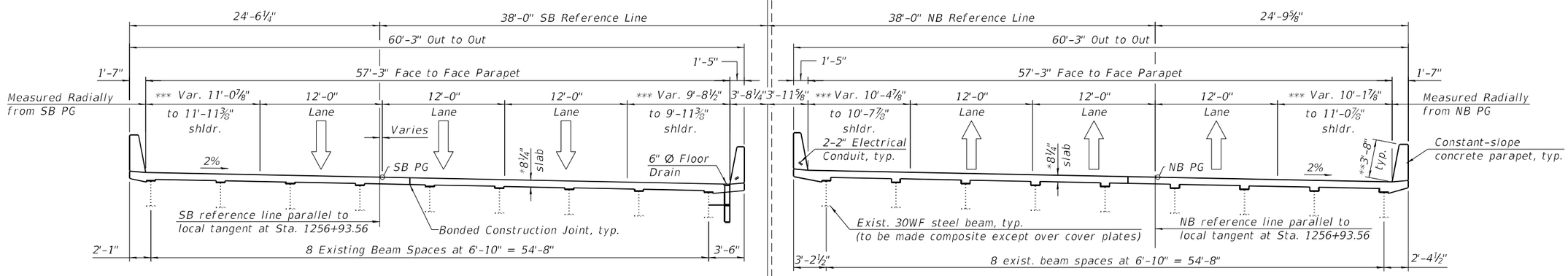

STAGE IV CONSTRUCTION AND FINAL CROSS SECTION SB
(SN 016-1120)

FINAL CROSS SECTION NB
(SN 016-0375)

* Prior to grinding
** After grinding
*** The reported measured shoulder distance was taken radially from the intersection of the outside lane line at the limits of the bridge deck taken at the front face of the parapet.

Notes:
1. Hatching represents limits of Removal.
2. All sections are looking north.
3. All transverse dimensions are at right angles to the local tangent, unless noted otherwise.
4. Existing transverse dimensions are based on field survey data.
5. For Offset sketch, see sheet 2 of 48.

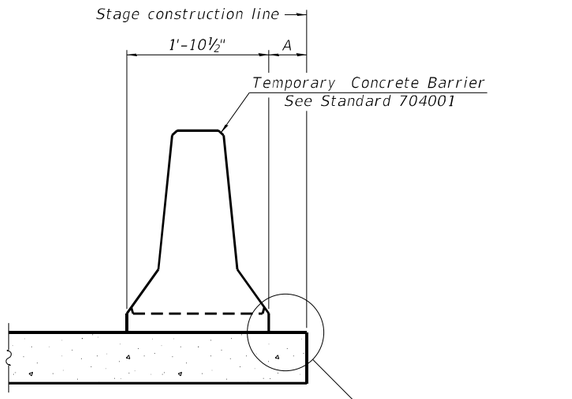

When "A" is 3'-1" or less, the temporary concrete barrier shall be restrained to the new slab according to Detail I, II or III. No restraint is required when "A" is greater than 3'-1".

NEW SLAB OR NEW DECK BEAM

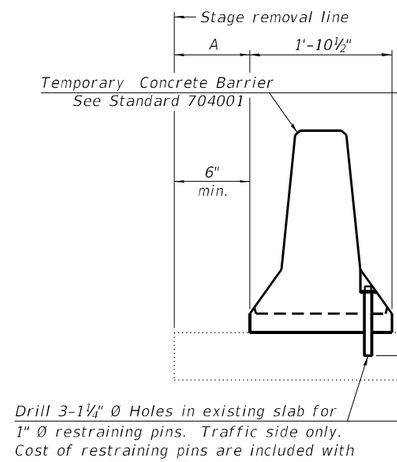

Drill 3-1¼" Ø Holes in existing slab for 1" Ø restraining pins. Traffic side only. Cost of restraining pins are included with Temporary Concrete Barrier. No restraint is required when "A" is greater than 3'-1".

EXISTING SLAB

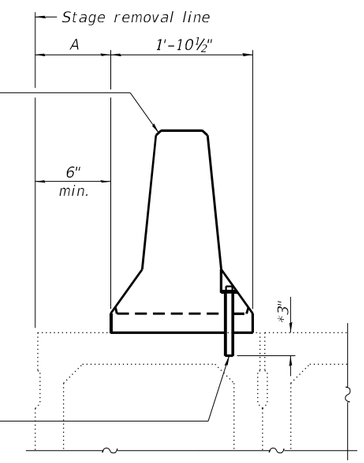

* When hot-mix asphalt wearing surface is present, embedment shall be 3" plus the wearing surface depth.

EXISTING DECK BEAM

SECTIONS THRU SLAB OR DECK BEAM

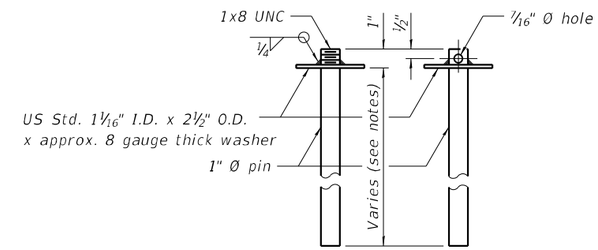

RESTRAINING PIN

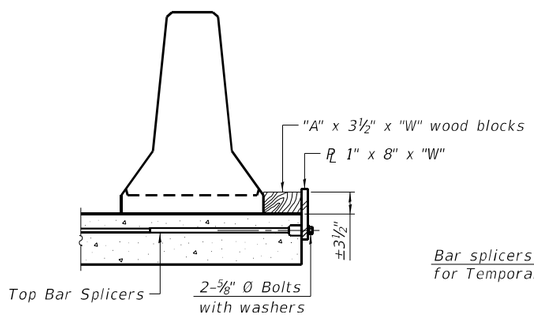

DETAIL I

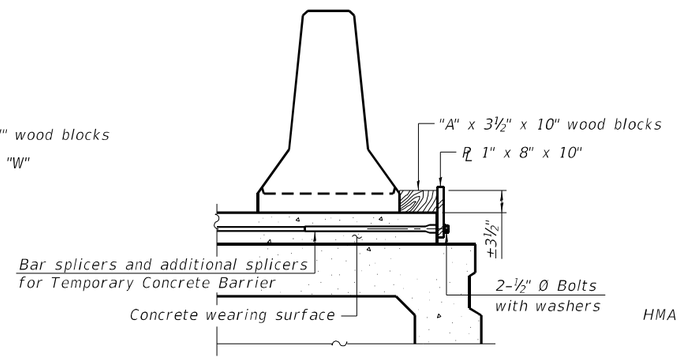

DETAIL II

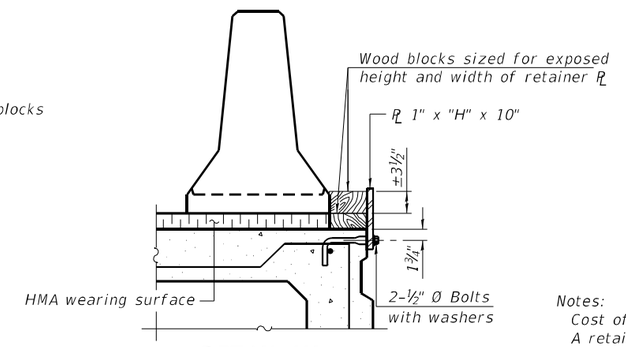

DETAIL III

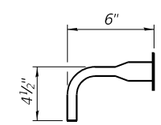

BAR SPLICER FOR #4 BAR - DETAIL III

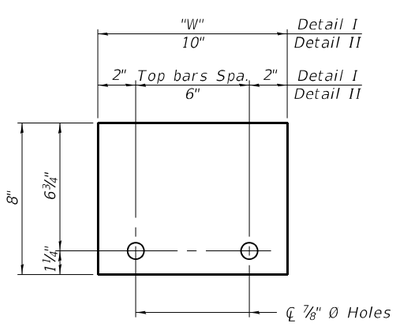

STEEL RETAINER PL 1" x 8" x "W"

(Detail I and II)

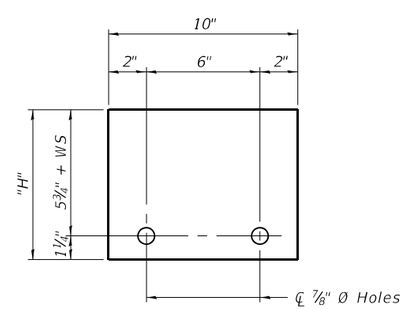

STEEL RETAINER PL 1" x "H" x 10"

(Detail III)

Notes:

Cost of retainer assembly is included with Temporary Concrete Barrier.

A retainer assembly shall be located at the approximate ℄ of each temporary concrete barrier.

The retainer plate shall not be removed until the concrete on the adjacent stage is ready to be poured. For Detail III applications the retainer plate shall not be removed until just prior to placing the adjacent beam.

When the 'A' dimension is less than 1½", the wood block shall be omitted and the barrier shall be placed in direct contact with the steel retainer plate. For deck beam applications the minimum required 'A' distance is 6" to accommodate the shear key clamping device.

Detail I - Installation for a new bridge deck or bridge slab.

Detail II - Installation for a new deck beam with an initial concrete wearing surface. Additional bar splicers shall be provided at 6'-0" centers and paired with the bar splicers of the concrete wearing surface reinforcement to accommodate the installation of the retainer assemblies. The cost of the additional bar splicers is included with the concrete wearing surface.

Detail III - Installation for a new deck beam with no initial wearing surface or with an initial hot-mix asphalt (HMA) wearing surface present. The deck beam directly beneath the temporary concrete barrier shall be fabricated with bar splicer inserts in the side of the beam, as detailed, to accommodate the installation of the retainer assemblies. A pair of bar splicers, 6" apart, shall be placed at 6'-0" centers along the length of the beam. The cost of the bar splicers is included with the deck beam.

RAILING CRITERIA

NCHRP 350 Test Level	3
Railing Weight (plf)	440

R-27

5-15-2023

STRAND ASSOCIATES®
1170 SOUTH HOUBOLT ROAD
JOLIET, ILLINOIS 60431
(815) 744-4200
IDFPR NO. 184-001273

USER NAME = codyh	DESIGNED - TJE	REVISED -	
	CHECKED - KRB	REVISED -	
PLOT SCALE = 0:2.0000 ':" / in.	DRAWN - CJH	REVISED -	
PLOT DATE = 9/20/2024	CHECKED - TJE	REVISED -	

STATE OF ILLINOIS
DEPARTMENT OF TRANSPORTATION

TEMPORARY CONCRETE BARRIER
STRUCTURE NO. 016-0375 (NB) AND 016-1120 (SB)

SHEET 5 OF 48 SHEETS

F.A. RTE.	SECTION	COUNTY	TOTAL SHEETS	SHEET NO.
342	(531) BR 23	COOK	1211	763
		CONTRACT NO. 62W38		
	ILLINOIS	FED. AID PROJECT		

MODEL: Default
FILE NAME: S:\IDL6300-63996346\113\Drawings\CAD\Micro-SSA\CAD_Sheets\0160375\1120-62W38-005-TCB.dgn
9/20/2024 2:14:12 PM

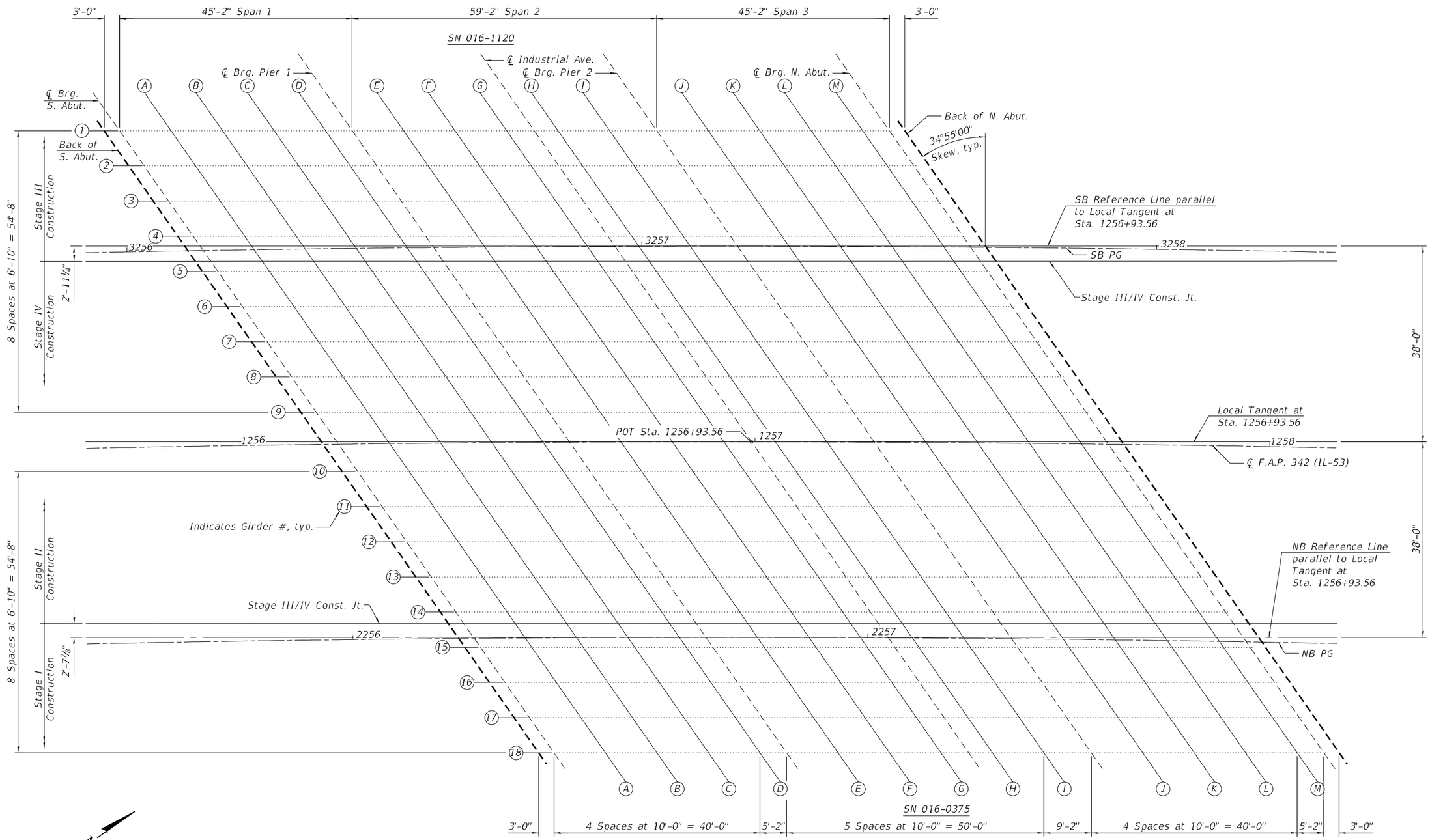

TOP OF DECK SLAB PLAN

Notes:
1. Work this sheet with sheets 7-11 of 48.
2. For Offset Sketch, see sheet 2 of 48.

MODEL: Default
FILE NAME: S:\IOL\6300--6399\63461\113\Drawings\CAD\Micro-SSA\CAD_Sheets\0160375112062W38-006-TSEL.dgn
9/20/2024 2:14:13 PM

STRAND ASSOCIATES®
1170 SOUTH HOUBOLT ROAD
JOLIET, ILLINOIS 60431
(815) 744-4200
IDFPR NO. 184-001273

USER NAME = codyh	DESIGNED - JAS	REVISED -	
	CHECKED - ELR	REVISED -	
PLOT SCALE = 0:2.0000 ':" / in.	DRAWN - CJH	REVISED -	
PLOT DATE = 9/20/2024	CHECKED - TJE	REVISED -	

STATE OF ILLINOIS
DEPARTMENT OF TRANSPORTATION

TOP OF DECK SLAB ELEVATION LAYOUT
STRUCTURE NO. 016-0375 (NB) AND 016-1120 (SB)

SHEET 6 OF 48 SHEETS

F.A. RTE.	SECTION	COUNTY	TOTAL SHEETS	SHEET NO.
342	(531) BR 23	COOK	1211	764
		CONTRACT NO. 62W38		
		ILLINOIS	FED. AID PROJECT	

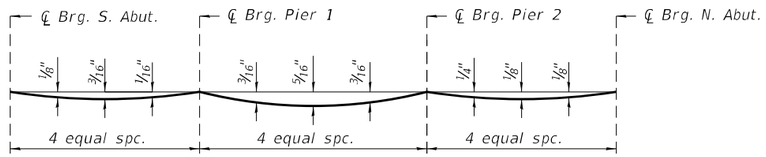

DEAD LOAD DEFLECTION DIAGRAM

(Includes weight of concrete only.)

Note:
The above deflections are not to be used in the field if the engineer is working from the grade elevations adjusted for dead load deflections and grinding as shown below.

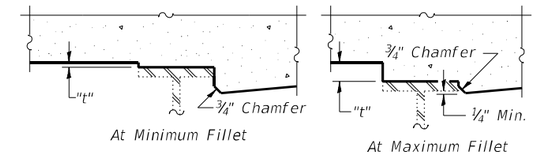

To determine "t": elevations of the top flanges of the beams shall be taken at intervals shown below. These elevations subtracted from the "Theoretical Grade Elevations Adjusted for Dead Load Deflection and Grinding" shown below, minus the initial slab thickness prior to grinding, equals the fillet heights "t" above top flange of beams.

The slab is to be ground after curing to achieve smoothness, but the slab is not to be ground to elevations below the "Theoretical Grade Elevations" shown below. For grinding the deck, see Special Provisions.

FILLET HEIGHTS

BEAM 1

Location	Station	Offset	Theoretical Grade Elevations	Theoretical Grade Elevations Adjusted for DL Deflection & Grinding
BK. S. ABUT.	3255+96.02	-23.62	745.45	745.47
CL BRG. S. ABUT.	3255+99.01	-23.57	745.45	745.47
A	3256+08.97	-23.38	745.42	745.46
B	3256+18.93	-23.21	745.40	745.44
C	3256+28.89	-23.06	745.37	745.40
D	3256+38.85	-22.93	745.34	745.36
CL BRG. PIER 1	3256+44.00	-22.86	745.33	745.35
E	3256+53.96	-22.75	745.29	745.33
F	3256+63.92	-22.66	745.26	745.31
G	3256+73.88	-22.58	745.22	745.28
H	3256+83.85	-22.52	745.18	745.23
I	3256+93.81	-22.48	745.14	745.17
CL BRG. PIER 2	3257+02.94	-22.45	745.10	745.12
J	3257+12.91	-22.44	745.05	745.08
K	3257+22.87	-22.44	745.00	745.04
L	3257+32.83	-22.46	744.95	744.99
M	3257+42.79	-22.50	744.90	744.93
CL BRG. N. ABUT.	3257+47.94	-22.52	744.87	744.90
BK. N. ABUT.	3257+50.93	-22.54	744.86	744.88

BEAM 2

Location	Station	Offset	Theoretical Grade Elevations	Theoretical Grade Elevations Adjusted for DL Deflection & Grinding
BK. S. ABUT.	3256+00.64	-16.70	745.31	745.33
CL BRG. S. ABUT.	3256+03.63	-16.64	745.30	745.32
A	3256+13.61	-16.47	745.28	745.31
B	3256+23.58	-16.31	745.25	745.29
C	3256+33.55	-16.16	745.22	745.25
D	3256+43.52	-16.03	745.19	745.21
CL BRG. PIER 1	3256+48.67	-15.97	745.17	745.19
E	3256+58.65	-15.87	745.14	745.17
F	3256+68.62	-15.79	745.10	745.15
G	3256+78.59	-15.72	745.06	745.12
H	3256+88.57	-15.66	745.02	745.07
I	3256+98.54	-15.63	744.98	745.01
CL BRG. PIER 2	3257+07.69	-15.61	744.94	744.96
J	3257+17.66	-15.60	744.89	744.92
K	3257+27.63	-15.62	744.84	744.88
L	3257+37.61	-15.64	744.79	744.83
M	3257+47.58	-15.69	744.74	744.77
CL BRG. N. ABUT.	3257+52.74	-15.72	744.71	744.73
BK. N. ABUT.	3257+55.73	-15.74	744.69	744.72

BEAM 3

Location	Station	Offset	Theoretical Grade Elevations	Theoretical Grade Elevations Adjusted for DL Deflection & Grinding
BK. S. ABUT.	3256+05.28	-9.78	745.16	745.18
CL BRG. S. ABUT.	3256+08.27	-9.72	745.15	745.17
A	3256+18.25	-9.56	745.13	745.16
B	3256+28.23	-9.40	745.10	745.14
C	3256+38.22	-9.27	745.07	745.10
D	3256+48.20	-9.15	745.04	745.06
CL BRG. PIER 1	3256+53.36	-9.09	745.02	745.04
E	3256+63.35	-9.00	744.99	745.02
F	3256+73.33	-8.92	744.95	745.00
G	3256+83.32	-8.86	744.91	744.96
H	3256+93.30	-8.81	744.87	744.91
I	3257+03.29	-8.78	744.82	744.86
CL BRG. PIER 2	3257+12.44	-8.77	744.78	744.80
J	3257+22.43	-8.77	744.73	744.76
K	3257+32.41	-8.79	744.68	744.72
L	3257+42.40	-8.83	744.63	744.67
M	3257+52.38	-8.88	744.58	744.61
CL BRG. N. ABUT.	3257+57.54	-8.92	744.55	744.57
BK. N. ABUT.	3257+60.53	-8.94	744.53	744.55

BEAM 4

Location	Station	Offset	Theoretical Grade Elevations	Theoretical Grade Elevations Adjusted for DL Deflection & Grinding
BK. S. ABUT.	3256+09.92	-2.86	745.01	745.03
CL BRG. S. ABUT.	3256+12.91	-2.81	745.00	745.02
A	3256+22.91	-2.65	744.98	745.01
B	3256+32.90	-2.50	744.95	744.99
C	3256+42.90	-2.37	744.92	744.95
D	3256+52.89	-2.26	744.89	744.91
CL BRG. PIER 1	3256+58.06	-2.21	744.87	744.89
E	3256+68.05	-2.12	744.83	744.86
F	3256+78.05	-2.05	744.79	744.84
G	3256+88.05	-2.00	744.75	744.81
H	3256+98.04	-1.96	744.71	744.76
I	3257+08.04	-1.94	744.67	744.70
CL BRG. PIER 2	3257+17.20	-1.94	744.62	744.64
J	3257+27.20	-1.95	744.57	744.60
K	3257+37.20	-1.98	744.52	744.56
L	3257+47.19	-2.02	744.47	744.51
M	3257+57.19	-2.08	744.41	744.44
CL BRG. N. ABUT.	3257+62.36	-2.12	744.38	744.40
BK. N. ABUT.	3257+65.35	-2.14	744.37	744.39

SB PG

Location	Station	Offset	Theoretical Grade Elevations	Theoretical Grade Elevations Adjusted for DL Deflection & Grinding
BK. S. ABUT.	3256+11.84	0.00	744.95	744.97
CL BRG. S. ABUT.	3256+14.81	0.00	744.94	744.96
A	3256+24.70	0.00	744.92	744.96
B	3256+34.60	0.00	744.89	744.93
C	3256+44.51	0.00	744.87	744.90
D	3256+54.44	0.00	744.84	744.86
CL BRG. PIER 1	3256+59.57	0.00	744.82	744.84
E	3256+69.51	0.00	744.78	744.82
F	3256+79.47	0.00	744.75	744.80
G	3256+89.43	0.00	744.71	744.76
H	3256+99.41	0.00	744.67	744.71
I	3257+09.39	0.00	744.62	744.65
CL BRG. PIER 2	3257+18.56	0.00	744.58	744.60
J	3257+28.57	0.00	744.53	744.55
K	3257+38.59	0.00	744.48	744.51
L	3257+48.62	0.00	744.42	744.46
M	3257+58.67	0.00	744.36	744.39
CL BRG. N. ABUT.	3257+63.86	0.00	744.33	744.35
BK. N. ABUT.	3257+66.88	0.00	744.31	744.33

STAGE III/IV CONST. JT.

Location	Station	Offset	Theoretical Grade Elevations	Theoretical Grade Elevations Adjusted for DL Deflection & Grinding
BK. S. ABUT.	3256+13.24	2.07	744.91	744.93
CL BRG. S. ABUT.	3256+16.24	2.12	744.90	744.92
A	3256+26.24	2.28	744.87	744.91
B	3256+36.24	2.42	744.84	744.88
C	3256+46.24	2.54	744.81	744.84
D	3256+56.25	2.65	744.78	744.80
CL BRG. PIER 1	3256+61.42	2.70	744.76	744.78
E	3256+71.42	2.78	744.72	744.75
F	3256+81.43	2.84	744.68	744.73
G	3256+91.43	2.89	744.64	744.70
H	3257+01.43	2.92	744.60	744.64
I	3257+11.44	2.94	744.55	744.58
CL BRG. PIER 2	3257+20.61	2.94	744.51	744.53
J	3257+30.62	2.92	744.46	744.48
K	3257+40.62	2.89	744.41	744.44
L	3257+50.62	2.84	744.35	744.39
M	3257+60.63	2.77	744.30	744.32
CL BRG. N. ABUT.	3257+65.80	2.73	744.27	744.29
BK. N. ABUT.	3257+68.80	2.70	744.25	744.27

BEAM 5

Location	Station	Offset	Theoretical Grade Elevations	Theoretical Grade Elevations Adjusted for DL Deflection & Grinding
BK. S. ABUT.	3256+14.57	4.05	744.86	744.88
CL BRG. S. ABUT.	3256+17.57	4.10	744.86	744.88
A	3256+27.58	4.26	744.83	744.86
B	3256+37.58	4.39	744.80	744.84
C	3256+47.59	4.51	744.77	744.80
D	3256+57.60	4.62	744.73	744.76
CL BRG. PIER 1	3256+62.77	4.67	744.71	744.74
E	3256+72.77	4.74	744.68	744.71
F	3256+82.78	4.81	744.64	744.69
G	3256+92.79	4.85	744.60	744.65
H	3257+02.80	4.88	744.55	744.60
I	3257+12.81	4.90	744.51	744.54
CL BRG. PIER 2	3257+21.98	4.89	744.46	744.48
J	3257+31.99	4.87	744.41	744.44
K	3257+42.00	4.84	744.36	744.40
L	3257+52.00	4.79	744.31	744.34
M	3257+62.01	4.72	744.25	744.28
CL BRG. N. ABUT.	3257+67.18	4.67	744.22	744.24
BK. N. ABUT.	3257+70.18	4.65	744.20	744.22

BEAM 6

Location	Station	Offset	Theoretical Grade Elevations	Theoretical Grade Elevations Adjusted for DL Deflection & Grinding
BK. S. ABUT.	3256+19.23	10.96	744.71	744.74
CL BRG. S. ABUT.	3256+22.24	11.01	744.71	744.73
A	3256+32.26	11.16	744.68	744.71
B	3256+42.27	11.29	744.65	744.69
C	3256+52.29	11.40	744.61	744.65
D	3256+62.31	11.50	744.58	744.60
CL BRG. PIER 1	3256+67.49	11.54	744.56	744.58
E	3256+77.51	11.61	744.52	744.56
F	3256+87.52	11.66	744.48	744.53
G	3256+97.54	11.70	744.44	744.49
H	3257+07.56	11.72	744.39	744.44
I	3257+17.58	11.73	744.35	744.38
CL BRG. PIER 2	3257+26.77	11.72	744.30	744.32
J	3257+36.79	11.69	744.25	744.28
K	3257+46.81	11.65	744.20	744.23
L	3257+56.82	11.59	744.14	744.18
M	3257+66.84	11.51	744.08	744.11
CL BRG. N. ABUT.	3257+72.02	11.47	744.05	744.07
BK. N. ABUT.	3257+75.02	11.44	744.03	744.06

BEAM 7

Location	Station	Offset	Theoretical Grade Elevations	Theoretical Grade Elevations Adjusted for DL Deflection & Grinding
BK. S. ABUT.	3256+23.91	17.87	744.56	744.59
CL BRG. S. ABUT.	3256+26.92	17.91	744.56	744.58
A	3256+36.94	18.05	744.53	744.56
B	3256+46.97	18.17	744.50	744.54
C	3256+57.00	18.28	744.46	744.49
D	3256+67.03	18.37	744.43	744.45
CL BRG. PIER 1	3256+72.22	18.41	744.41	744.43
E	3256+82.25	18.47	744.37	744.40
F	3256+92.28	18.52	744.33	744.37
G	3257+02.31	18.55	744.28	744.34
H	3257+12.34	18.56	744.24	744.28
I	3257+22.37	18.56	744.19	744.22
CL BRG. PIER 2	3257+31.56	18.54	744.14	744.16
J	3257+41.60	18.51	744.09	744.12
K	3257+51.63	18.45	744.03	744.07
L	3257+61.66	18.39	743.98	744.01
M	3257+71.69	18.30	743.92	743.95
CL BRG. N. ABUT.	3257+76.87	18.25	743.89	743.91
BK. N. ABUT.	3257+79.88	18.22	743.87	743.89

BEAM 8

Location	Station	Offset	Theoretical Grade Elevations	Theoretical Grade Elevations Adjusted for DL Deflection & Grinding
BK. S. ABUT.	3256+28.59	24.77	744.42	744.44
CL BRG. S. ABUT.	3256+31.60	24.82	744.41	744.43
A	3256+41.64	24.95	744.38	744.41
B	3256+51.69	25.06	744.34	744.38
C	3256+61.73	25.16	744.31	744.34
D	3256+71.77	25.24	744.27	744.29
CL BRG. PIER 1	3256+76.96	25.27	744.25	744.27
E	3256+87.00	25.33	744.21	744.24
F	3256+97.04	25.37	744.17	744.22
G	3257+07.08	25.39	744.12	744.18
H	3257+17.13	25.40	744.08	744.12
I	3257+27.17	25.38	744.03	744.06
CL BRG. PIER 2	3257+36.37	25.36	743.98	744.00
J	3257+46.41	25.32	743.93	743.95
K	3257+56.46	25.26	743.87	743.91
L	3257+66.50	25.18	743.81	743.85
M	3257+76.54	25.09	743.75	743.78
CL BRG. N. ABUT.	3257+81.73	25.03	743.72	743.74
BK. N. ABUT.	3257+84.74	25.00	743.70	743.72

BEAM 9

Location	Station	Offset	Theoretical Grade Elevations	Theoretical Grade Elevations Adjusted for DL Deflection & Grinding
BK. S. ABUT.	3256+33.29	31.67	744.26	744.29
CL BRG. S. ABUT.	3256+36.30	31.71	744.26	744.28
A	3256+46.36	31.84	744.22	744.26
B	3256+56.41	31.94	744.19	744.23
C	3256+66.46	32.03	744.15	744.19
D	3256+76.51	32.10	744.12	744.14
CL BRG. PIER 1	3256+81.71	32.14	744.10	744.12
E	3256+91.76	32.18	744.05	744.09
F	3257+01.82	32.21	744.01	744.06
G	3257+11.87	32.23	743.96	744.02
H	3257+21.92	32.23	743.92	743.96
I	3257+31.98	32.21	743.87	743.90
CL BRG. PIER 2	3257+41.19	32.17	743.82	743.84
J	3257+51.25	32.12	743.76	743.79
K	3257+61.30	32.06	743.71	743.74
L	3257+71.35	31.97	743.65	743.69
M	3257+81.40	31.87	743.59	743.61
CL BRG. N. ABUT.	3257+86.60	31.81	743.55	743.57
BK. N. ABUT.	3257+89.61	31.78	743.53	743.55

BEAM 10

Location	Station	Offset	Theoretical Grade Elevations	Theoretical Grade Elevations Adjusted for DL Deflection & Grinding
BK. S. ABUT.	2255+98.28	-32.69	745.72	745.74
CL BRG. S. ABUT.	2256+01.26	-32.66	745.71	745.73
A	2256+11.21	-32.55	745.67	745.70
B	2256+21.16	-32.45	745.62	745.66
C	2256+31.10	-32.38	745.58	745.61
D	2256+41.05	-32.32	745.53	745.55
CL BRG. PIER 1	2256+46.19	-32.29	745.50	745.52
E	2256+56.13	-32.26	745.45	745.48
F	2256+66.08	-32.24	745.40	745.43
G	2256+76.02	-32.24	745.34	745.38
H	2256+85.97	-32.26	745.28	745.33
I	2256+95.92	-32.29	745.21	745.27
CL BRG. PIER 2	2257+05.03	-32.33	745.15	745.21
J	2257+14.98	-32.40	745.09	745.14
K	2257+24.92	-32.48	745.02	745.06
L	2257+34.87	-32.58	744.94	744.98
M	2257+44.81	-32.69	744.87	744.89
CL BRG. N. ABUT.	2257+49.95	-32.76	744.83	744.85
BK. N. ABUT.	2257+52.93	-32.80	744.80	744.82

BEAM 11

Location	Station	Offset	Theoretical Grade Elevations	Theoretical Grade Elevations Adjusted for DL Deflection & Grinding
BK. S. ABUT.	2256+02.95	-25.80	745.56	745.59
CL BRG. S. ABUT.	2256+05.93	-25.77	745.55	745.57
A	2256+15.89	-25.67	745.51	745.55
B	2256+25.85	-25.58	745.47	745.51
C	2256+35.80	-25.51	745.42	745.45
D	2256+45.76	-25.46	745.37	745.39
CL BRG. PIER 1	2256+50.91	-25.44	745.34	745.36
E	2256+60.86	-25.42	745.29	745.32
F	2256+70.82	-25.41	745.23	745.27
G	2256+80.78	-25.41	745.17	745.22
H	2256+90.74	-25.44	745.11	745.16
I	2257+00.69	-25.48	745.05	745.10
CL BRG. PIER 2	2257+09.82	-25.53	744.98	745.04
J	2257+19.78	-25.60	744.92	744.97
K	2257+29.73	-25.69	744.84	744.89
L	2257+39.69	-25.80	744.77	744.80
M	2257+49.65	-25.92	744.69	744.72
CL BRG. N. ABUT.	2257+54.79	-25.99	744.65	744.67
BK. N. ABUT.	2257+57.78	-26.03	744.63	744.65

BEAM 12

Location	Station	Offset	Theoretical Grade Elevations	Theoretical Grade Elevations Adjusted for DL Deflection & Grinding
BK. S. ABUT.	2256+07.62	-18.92	745.41	745.43
CL BRG. S. ABUT.	2256+10.61	-18.89	745.40	745.42
A	2256+20.58	-18.79	745.35	745.39
B	2256+30.55	-18.71	745.31	745.35
C	2256+40.52	-18.65	745.26	745.29
D	2256+50.49	-18.61	745.21	745.23
CL BRG. PIER 1	2256+55.64	-18.59	745.18	745.20
E	2256+65.61	-18.58	745.12	745.15
F	2256+75.58	-18.57	745.07	745.10
G	2256+85.54	-18.59	745.01	745.05
H	2256+95.51	-18.62	744.94	744.99
I	2257+05.48	-18.67	744.88	744.93
CL BRG. PIER 2	2257+14.62	-18.73	744.82	744.87
J	2257+24.59	-18.81	744.74	744.79
K	2257+34.56	-18.91	744.67	744.71
L	2257+44.52	-19.02	744.60	744.63
M	2257+54.49	-19.15	744.52	744.54
CL BRG. N. ABUT.	2257+59.64	-19.22	744.47	744.50
BK. N. ABUT.	2257+62.63	-19.27	744.45	744.47

BEAM 13

Location	Station	Offset	Theoretical Grade Elevations	Theoretical Grade Elevations Adjusted for DL Deflection & Grinding
BK. S. ABUT.	2256+12.31	-12.04	745.25	745.27
CL BRG. S. ABUT.	2256+15.30	-12.01	745.24	745.26
A	2256+25.28	-11.92	745.19	745.23
B	2256+35.26	-11.85	745.15	745.19
C	2256+45.24	-11.80	745.10	745.13
D	2256+55.22	-11.76	745.05	745.07
CL BRG. PIER 1	2256+60.38	-11.75	745.02	745.04
E	2256+70.36	-11.74	744.96	744.99
F	2256+80.34	-11.75	744.90	744.94
G	2256+90.32	-11.77	744.84	744.88
H	2257+00.30	-11.81	744.78	744.82
I	2257+10.28	-11.87	744.71	744.76
CL BRG. PIER 2	2257+19.43	-11.93	744.64	744.70
J	2257+29.41	-12.02	744.57	744.62
K	2257+39.39	-12.13	744.50	744.54
L	2257+49.37	-12.25	744.42	744.45
M	2257+59.35	-12.39	744.34	744.37
CL BRG. N. ABUT.	2257+64.50	-12.46	744.30	744.32
BK. N. ABUT.	2257+67.49	-12.51	744.27	744.29

BEAM 14

Location	Station	Offset	Theoretical Grade Elevations	Theoretical Grade Elevations Adjusted for DL Deflection & Grinding
BK. S. ABUT.	2256+17.01	-5.16	745.10	745.12
CL BRG. S. ABUT.	2256+20.00	-5.13	745.08	745.10
A	2256+30.00	-5.05	745.04	745.07
B	2256+39.99	-4.99	744.99	745.03
C	2256+49.98	-4.95	744.94	744.97
D	2256+59.97	-4.92	744.88	744.90
CL BRG. PIER 1	2256+65.13	-4.91	744.85	744.88
E	2256+75.12	-4.91	744.80	744.82
F	2256+85.12	-4.92	744.74	744.77
G	2256+95.11	-4.95	744.67	744.72
H	2257+05.10	-5.00	744.61	744.66
I	2257+15.09	-5.06	744.54	744.59
CL BRG. PIER 2	2257+24.25	-5.14	744.47	744.53
J	2257+34.24	-5.24	744.40	744.45
K	2257+44.23	-5.35	744.32	744.37
L	2257+54.22	-5.48	744.25	744.28
M	2257+64.21	-5.63	744.16	744.19
CL BRG. N. ABUT.	2257+69.37	-5.71	744.12	744.14
BK. N. ABUT.	2257+72.37	-5.76	744.10	744.12

STAGE I/II CONST. JT.

Location	Station	Offset	Theoretical Grade Elevations	Theoretical Grade Elevations Adjusted for DL Deflection & Grinding
BK. S. ABUT.	2256+18.56	-2.89	745.04	745.06
CL BRG. S. ABUT.	2256+21.55	-2.87	745.03	745.05
A	2256+31.55	-2.79	744.98	745.02
B	2256+41.55	-2.73	744.93	744.97
C	2256+51.54	-2.69	744.88	744.91
D	2256+61.54	-2.66	744.83	744.85
CL BRG. PIER 1	2256+66.70	-2.66	744.80	744.82
E	2256+76.70	-2.66	744.74	744.77
F	2256+86.69	-2.68	744.68	744.72
G	2256+96.69	-2.71	744.62	744.66
H	2257+06.68	-2.76	744.55	744.60
I	2257+16.68	-2.83	744.48	744.54
CL BRG. PIER 2	2257+25.84	-2.90	744.42	744.47
J	2257+35.83	-3.00	744.34	744.39
K	2257+45.83	-3.12	744.27	744.31
L	2257+55.82	-3.25	744.19	744.22
M	2257+65.81	-3.40	744.11	744.13
CL BRG. N. ABUT.	2257+70.98	-3.48	744.06	744.08
BK. N. ABUT.	2257+73.97	-3.54	744.04	744.06

NB PG

Location	Station	Offset	Theoretical Grade Elevations	Theoretical Grade Elevations Adjusted for DL Deflection & Grinding
BK. S. ABUT.	2256+20.54	0.00	744.98	745.00
CL BRG. S. ABUT.	2256+23.52	0.00	744.96	744.99
A	2256+33.47	0.00	744.92	744.95
B	2256+43.43	0.00	744.87	744.91
C	2256+53.40	0.00	744.82	744.85
D	2256+63.39	0.00	744.77	744.79
CL BRG. PIER 1	2256+68.55	0.00	744.74	744.76
E	2256+78.56	0.00	744.68	744.71
F	2256+88.57	0.00	744.62	744.65
G	2256+98.59	0.00	744.55	744.59
H	2257+08.63	0.00	744.48	744.53
I	2257+18.68	0.00	744.41	744.46
CL BRG. PIER 2	2257+27.91	0.00	744.34	744.40
J	2257+37.98	0.00	744.27	744.32
K	2257+48.06	0.00	744.19	744.23
L	2257+58.16	0.00	744.10	744.14
M	2257+68.27	0.00	744.02	744.04
CL BRG. N. ABUT.	2257+73.50	0.00	743.97	743.99
BK. N. ABUT.	2257+76.53	0.00	743.94	743.96

BEAM 15

Location	Station	Offset	Theoretical Grade Elevations	Theoretical Grade Elevations Adjusted for DL Deflection & Grinding
BK. S. ABUT.	2256+21.72	1.72	744.94	744.96
CL BRG. S. ABUT.	2256+24.72	1.74	744.92	744.94
A	2256+34.72	1.81	744.88	744.91
B	2256+44.72	1.87	744.83	744.87
C	2256+54.73	1.90	744.77	744.81
D	2256+64.73	1.92	744.72	744.74
CL BRG. PIER 1	2256+69.90	1.93	744.69	744.71
E	2256+79.90	1.92	744.63	744.66
F	2256+89.90	1.90	744.57	744.61
G	2256+99.91	1.86	744.50	744.55
H	2257+09.91	1.80	744.44	744.49
I	2257+19.91	1.73	744.37	744.42
CL BRG. PIER 2	2257+29.08	1.65	744.30	744.36
J	2257+39.08	1.55	744.23	744.28
K	2257+49.08	1.42	744.15	744.19
L	2257+59.09	1.29	744.07	744.10
M	2257+69.09	1.13	743.99	744.01
CL BRG. N. ABUT.	2257+74.25	1.04	743.94	743.96
BK. N. ABUT.	2257+77.25	0.99	743.92	743.94

BEAM 16

Location	Station	Offset	Theoretical Grade Elevations	Theoretical Grade Elevations Adjusted for DL Deflection & Grinding
BK. S. ABUT.	2256+26.44	8.59	744.78	744.80
CL BRG. S. ABUT.	2256+29.44	8.61	744.77	744.79
A	2256+39.45	8.67	744.72	744.75
B	2256+49.47	8.72	744.67	744.71
C	2256+59.48	8.75	744.61	744.64
D	2256+69.50	8.76	744.56	744.58
CL BRG. PIER 1	2256+74.67	8.76	744.53	744.55
E	2256+84.69	8.75	744.46	744.49
F	2256+94.70	8.72	744.40	744.44
G	2257+04.72	8.67	744.34	744.38
H	2257+14.73	8.60	744.27	744.32
I	2257+24.74	8.52	744.20	744.25
CL BRG. PIER 2	2257+33.92	8.44	744.13	744.18
J	2257+43.94	8.32	744.05	744.10
K	2257+53.95	8.19	743.97	744.02
L	2257+63.96	8.05	743.89	743.93
M	2257+73.97	7.88	743.81	743.83
CL BRG. N. ABUT.	2257+79.15	7.79	743.76	743.78
BK. N. ABUT.	2257+82.15	7.74	743.74	743.76

BEAM 17

Location	Station	Offset	Theoretical Grade Elevations	Theoretical Grade Elevations Adjusted for DL Deflection & Grinding
BK. S. ABUT.	2256+31.17	15.46	744.62	744.64
CL BRG. S. ABUT.	2256+34.17	15.48	744.61	744.63
A	2256+44.20	15.53	744.56	744.59
B	2256+54.23	15.57	744.50	744.54
C	2256+64.25	15.59	744.45	744.48
D	2256+74.28	15.59	744.39	744.41
CL BRG. PIER 1	2256+79.46	15.59	744.36	744.38
E	2256+89.48	15.57	744.30	744.33
F	2256+99.51	15.53	744.23	744.27
G	2257+09.54	15.47	744.17	744.21
H	2257+19.56	15.40	744.10	744.15
I	2257+29.59	15.31	744.02	744.08
CL BRG. PIER 2	2257+38.78	15.22	743.96	744.01
J	2257+48.80	15.10	743.88	743.93
K	2257+58.83	14.96	743.80	743.84
L	2257+68.85	14.80	743.72	743.75
M	2257+78.87	14.63	743.63	743.66
CL BRG. N. ABUT.	2257+84.05	14.54	743.58	743.61
BK. N. ABUT.	2257+87.06	14.48	743.56	743.58

BEAM 18

Location	Station	Offset	Theoretical Grade Elevations	Theoretical Grade Elevations Adjusted for DL Deflection & Grinding
BK. S. ABUT.	2256+35.91	22.32	744.46	744.48
CL BRG. S. ABUT.	2256+38.92	22.34	744.45	744.47
A	2256+48.96	22.38	744.40	744.43
B	2256+58.99	22.41	744.34	744.38
C	2256+69.03	22.43	744.28	744.32
D	2256+79.07	22.42	744.23	744.25
CL BRG. PIER 1	2256+84.25	22.41	744.19	744.22
E	2256+94.29	22.38	744.13	744.16
F	2257+04.33	22.34	744.07	744.10
G	2257+14.37	22.27	744.00	744.04
H	2257+24.40	22.19	743.93	743.97
I	2257+34.44	22.10	743.85	743.91
CL BRG. PIER 2	2257+43.64	21.99	743.78	743.84
J	2257+53.68	21.86	743.70	743.75
K	2257+63.71	21.72	743.62	743.66
L	2257+73.75	21.56	743.54	743.57
M	2257+83.78	21.38	743.45	743.48
CL BRG. N. ABUT.	2257+88.97	21.28	743.40	743.43
BK. N. ABUT.	2257+91.98	21.22	743.38	743.40

W. FACE OF PARAPET NB BRIDGE

Location	Station	Offset	Theoretical Grade Elevations	Theoretical Grade Elevations Adjusted for Grinding
S. End S. Approach	2255+68.45	-34.93	745.86	745.88
A1	2255+78.39	-34.76	745.83	745.85
A2	2255+88.33	-34.62	745.79	745.81
N. End S. Approach	2255+98.27	-34.48	745.76	745.78

W. EDGE OF PAVEMENT

Location	Station	Offset	Theoretical Grade Elevations	Theoretical Grade Elevations Adjusted for Grinding
S. End S. Approach	2255+75.77	-24.00	745.62	745.64
A1	2255+85.63	-24.00	745.59	745.61
A2	2255+95.50	-24.00	745.56	745.58
N. End S. Approach	2256+05.38	-24.00	745.52	745.54

STAGE I/II CONST. JT.

Location	Station	Offset	Theoretical Grade Elevations	Theoretical Grade Elevations Adjusted for Grinding
S. End S. Approach	2255+89.79	-3.22	745.16	745.18
A1	2255+99.79	-3.09	745.12	745.14
A2	2256+09.78	-2.98	745.08	745.10
N. End S. Approach	2256+19.78	-2.88	745.04	745.06

NB PG

Location	Station	Offset	Theoretical Grade Elevations	Theoretical Grade Elevations Adjusted for Grinding
S. End S. Approach	2255+91.97	0.00	745.09	745.11
A1	2256+01.89	0.00	745.05	745.07
A2	2256+11.81	0.00	745.01	745.03
N. End S. Approach	2256+21.75	0.00	744.97	744.99

E. EDGE OF PAVEMENT

Location	Station	Offset	Theoretical Grade Elevations	Theoretical Grade Elevations Adjusted for Grinding
S. End S. Approach	2256+00.13	12.00	744.82	744.84
A1	2256+10.08	12.00	744.78	744.80
A2	2256+20.03	12.00	744.74	744.76
N. End S. Approach	2256+30.00	12.00	744.70	744.72

E. FACE OF PARAPET & GUTTER LINE NB

Location	Station	Offset	Theoretical Grade Elevations	Theoretical Grade Elevations Adjusted for Grinding
S. End S. Approach	2256+07.57	22.88	744.57	744.59
A1	2256+17.60	22.98	744.53	744.55
A2	2256+27.64	23.06	744.48	744.51
N. End S. Approach	2256+37.68	23.12	744.44	744.46

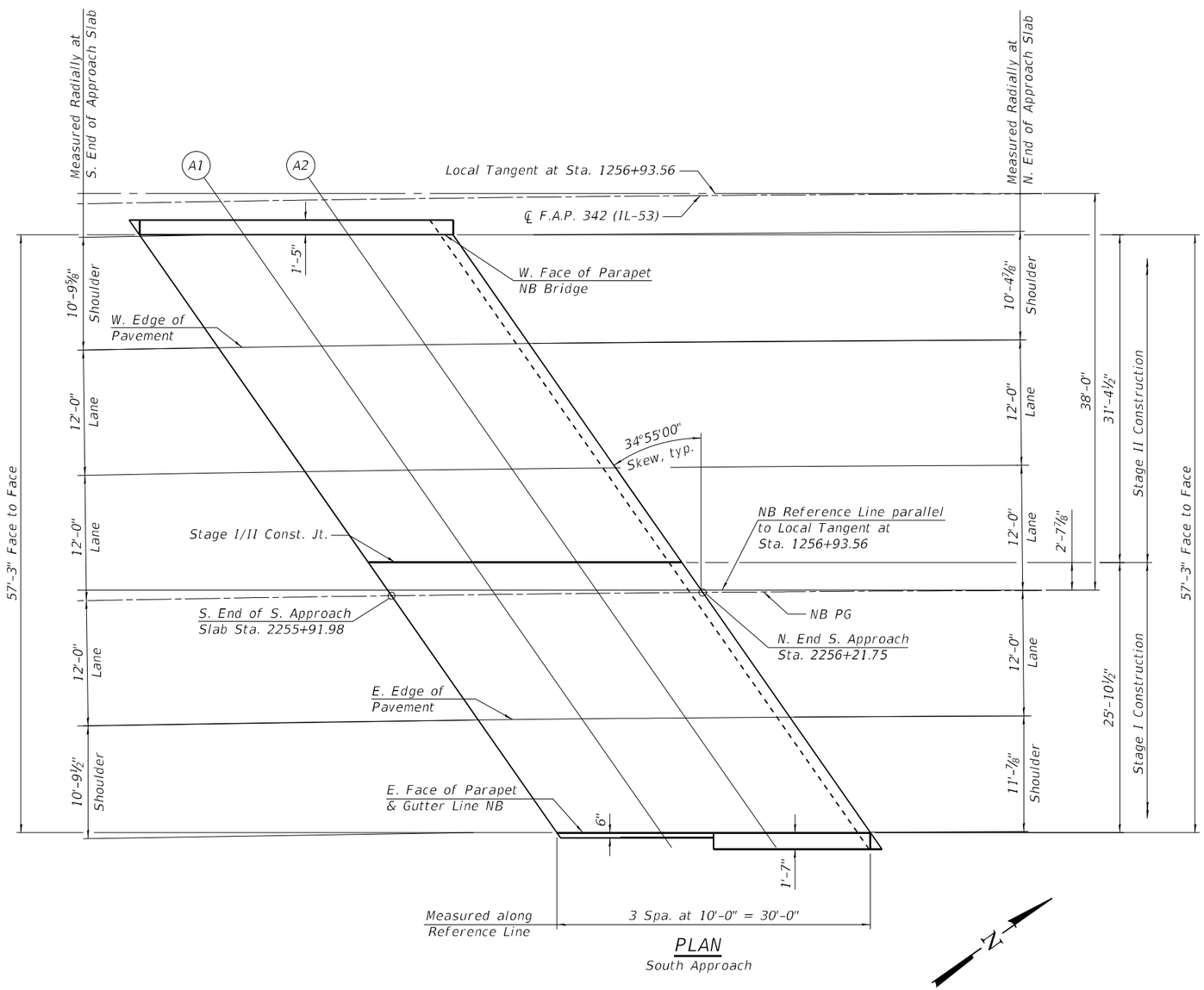

PLAN
South Approach

Notes:
1. All dimensions measured perpendicular to reference line unless otherwise noted.
2. For Offset sketch see sheet 2 of 48.

MODEL: Default
FILE NAME: S:\IOL\6300--6399\6346\113\Drawings\CAD\Micro-SSA\CAD_Sheets\0160375\120-62W38-012-ASE1.dgn

STRAND ASSOCIATES
1170 SOUTH HOUBOLT ROAD
JOLIET, ILLINOIS 60431
(815) 744-4200
IDFPR NO. 184-001273

USER NAME = codyh	DESIGNED - JAS	REVISED -	
	CHECKED - ELR	REVISED -	
PLOT SCALE = 0:2.0000 ':" / in.	DRAWN - CJH	REVISED -	
PLOT DATE = 9/20/2024	CHECKED - TJE	REVISED -	

STATE OF ILLINOIS
DEPARTMENT OF TRANSPORTATION

TOP OF APPROACH SLAB ELEVATION (1 OF 4)
STRUCTURE NO. 016-0375 (NB)

SHEET 12 OF 48 SHEETS

F.A. RTE.	SECTION	COUNTY	TOTAL SHEETS	SHEET NO.
342	(531) BR 23	COOK	1211	770

CONTRACT NO. 62W38

ILLINOIS | FED. AID PROJECT

9/20/2024 2:14:19 PM

W. FACE OF PARAPET NB BRIDGE

Location	Station	Offset	Theoretical Grade Elevations	Theoretical Grade Elevations Adjusted for Grinding
S. End N. Approach	2257+50.46	-34.56	744.86	744.88
A3	2257+60.40	-34.70	744.78	744.80
A4	2257+70.34	-34.85	744.70	744.72
N. End N. Approach	2257+80.28	-35.03	744.61	744.63

W. EDGE OF PAVEMENT

Location	Station	Offset	Theoretical Grade Elevations	Theoretical Grade Elevations Adjusted for Grinding
S. End N. Approach	2257+58.01	-24.00	744.58	744.60
A3	2257+68.08	-24.00	744.50	744.52
A4	2257+78.16	-24.00	744.41	744.43
N. End N. Approach	2257+88.25	-24.00	744.32	744.34

STAGE I/II CONST. JT.

Location	Station	Offset	Theoretical Grade Elevations	Theoretical Grade Elevations Adjusted for Grinding
S. End N. Approach	2257+72.76	-3.51	744.05	744.07
A3	2257+82.75	-3.69	743.96	743.98
A4	2257+92.74	-3.89	743.87	743.89
N. End N. Approach	2258+02.73	-4.10	743.78	743.80

NB PG

Location	Station	Offset	Theoretical Grade Elevations	Theoretical Grade Elevations Adjusted for Grinding
S. End N. Approach	2257+75.30	0.00	743.95	743.98
A3	2257+85.43	0.00	743.86	743.88
A4	2257+95.57	0.00	743.77	743.79
N. End N. Approach	2258+05.73	0.00	743.67	743.69

E. EDGE OF PAVEMENT

Location	Station	Offset	Theoretical Grade Elevations	Theoretical Grade Elevations Adjusted for Grinding
S. End N. Approach	2257+84.01	12.00	743.64	743.66
A3	2257+94.18	12.00	743.54	743.56
A4	2258+04.35	12.00	743.44	743.46
N. End N. Approach	2258+14.54	12.00	743.34	743.36

E. FACE OF PARAPET AND GUTTER LINE NB

Location	Station	Offset	Theoretical Grade Elevations	Theoretical Grade Elevations Adjusted for Grinding
S. End N. Approach	2257+91.32	22.02	743.37	743.39
A3	2258+01.52	22.03	743.27	743.29
A4	2258+11.71	22.02	743.17	743.19
N. End N. Approach	2258+21.91	22.00	743.07	743.09

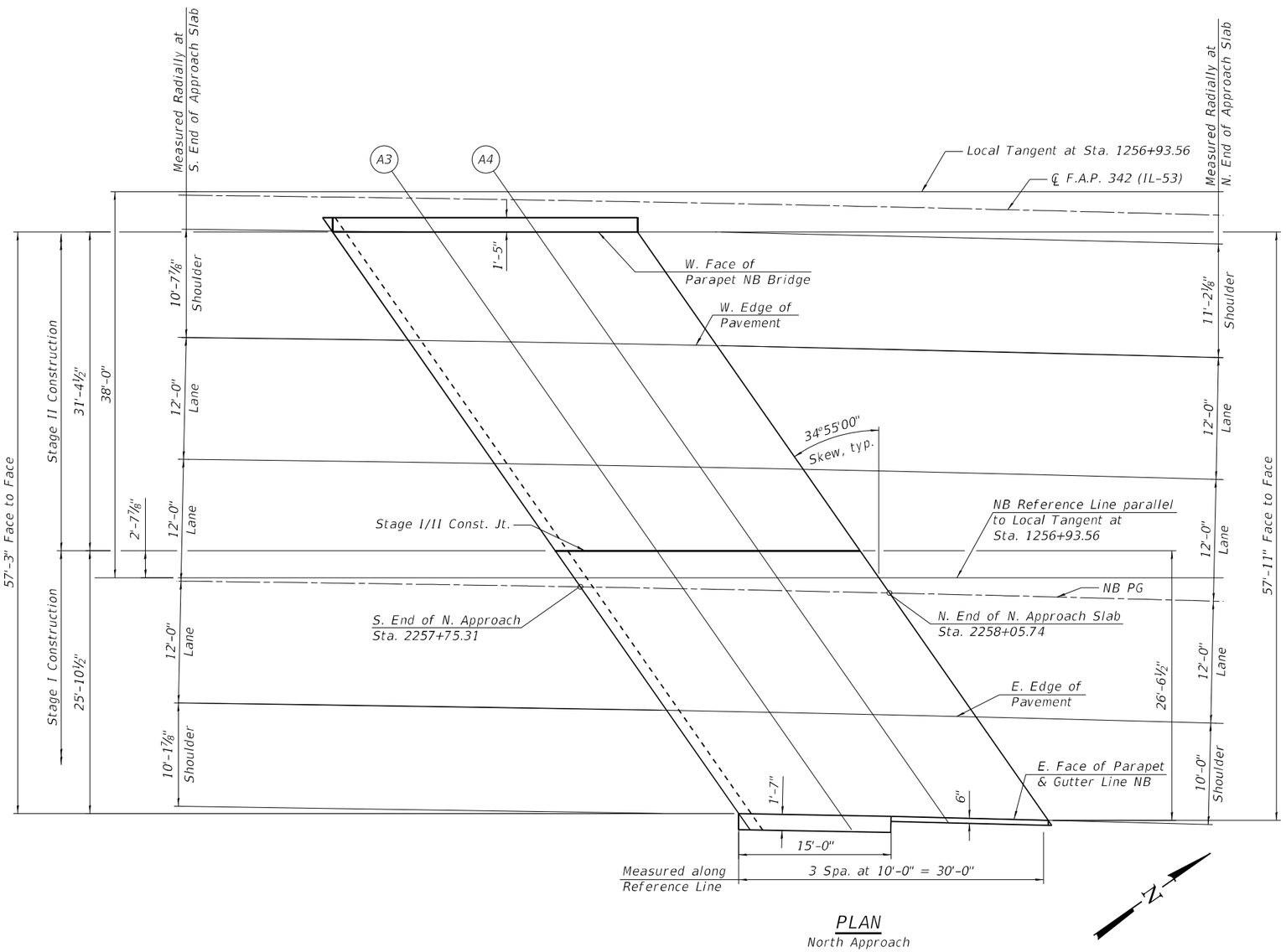

PLAN

North Approach

Notes:
1. All dimensions measured perpendicular to reference line unless otherwise noted.
2. For Offset sketch see sheet 2 of 48.

W. FACE OF PARAPET & GUTTER LINE SB

Location	Station	Offset	Theoretical Grade Elevations	Theoretical Grade Elevations Adjusted for Grinding
S. End S. Approach	3255+67.03	-24.77	745.52	745.54
A1	3255+76.98	-24.53	745.50	745.52
A2	3255+86.94	-24.31	745.48	745.50
N. End. S. Approach	3255+96.90	-24.11	745.46	745.48

W. EDGE OF PAVEMENT

Location	Station	Offset	Theoretical Grade Elevations	Theoretical Grade Elevations Adjusted for Grinding
S. End S. Approach	3255+75.47	-12.00	745.25	745.27
A1	3255+85.30	-12.00	745.24	745.26
A2	3255+95.14	-12.00	745.22	745.24
N. End. S. Approach	3256+04.99	-12.00	745.20	745.22

SB PG

Location	Station	Offset	Theoretical Grade Elevations	Theoretical Grade Elevations Adjusted for Grinding
S. End S. Approach	3255+83.44	0.00	745.00	745.02
A1	3255+93.30	0.00	744.99	745.01
A2	3256+03.17	0.00	744.97	744.99
N. End. S. Approach	3256+13.05	0.00	744.95	744.97

STAGE III/IV CONST. JT.

Location	Station	Offset	Theoretical Grade Elevations	Theoretical Grade Elevations Adjusted for Grinding
S. End S. Approach	3255+84.45	1.52	744.97	744.99
A1	3255+94.45	1.72	744.95	744.97
A2	3256+04.45	1.92	744.93	744.95
N. End. S. Approach	3256+14.45	2.09	744.90	744.92

E. EDGE OF PAVEMENT

Location	Station	Offset	Theoretical Grade Elevations	Theoretical Grade Elevations Adjusted for Grinding
S. End S. Approach	3255+99.50	24.00	744.49	744.52
A1	3256+09.42	24.00	744.48	744.50
A2	3256+19.34	24.00	744.45	744.47
N. End. S. Approach	3256+29.28	24.00	744.43	744.45

E. FACE OF PARAPET SB BRIDGE

Location	Station	Offset	Theoretical Grade Elevations	Theoretical Grade Elevations Adjusted for Grinding
S. End S. Approach	3256+05.78	33.32	744.30	744.32
A1	3256+15.84	33.49	744.27	744.29
A2	3256+25.89	33.65	744.24	744.27
N. End. S. Approach	3256+35.95	33.79	744.22	744.24

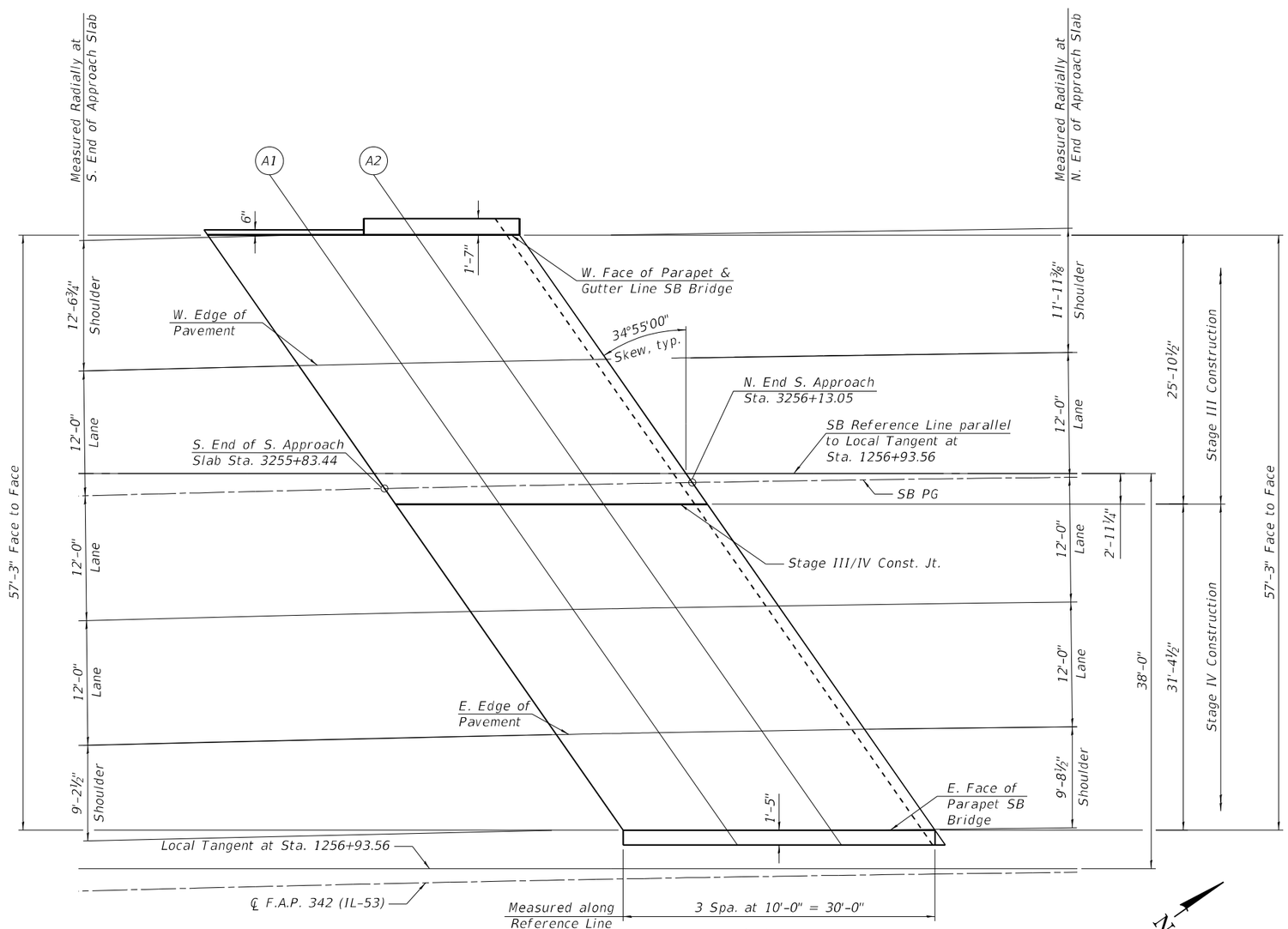

PLAN
South Approach

Notes:
1. All dimensions measured perpendicular to reference line unless otherwise noted.
2. For Offset sketch see sheet 2 of 48.

STRAND ASSOCIATES
1170 SOUTH HOUBOLT ROAD
JOLIET, ILLINOIS 60431
(815) 744-4200
IDFPR NO. 184-001273

USER NAME = codyh	DESIGNED - JAS	REVISED -	
	CHECKED - ELR	REVISED -	
PLOT SCALE = 0:2.0000 ':" / in.	DRAWN - CJH	REVISED -	
PLOT DATE = 9/20/2024	CHECKED - TJE	REVISED -	

STATE OF ILLINOIS
DEPARTMENT OF TRANSPORTATION

TOP OF APPROACH SLAB ELEVATION (3 OF 4)
STRUCTURE NO. 016-1120 (SB)

SHEET 14 OF 48 SHEETS

F.A. RTE.	SECTION	COUNTY	TOTAL SHEETS	SHEET NO.
342	(531) BR 23	COOK	1211	772
		CONTRACT NO. 62W38		
	ILLINOIS	FED. AID PROJECT		

MODEL: Default
FILE NAME: S:\OL\6300--63996346\113\Drawings\CAD\Micro-SSA\CAD_Sheets\016037511120-62W38-014-ASE3.dgn
9/20/2024 2:14:21 PM

W. FACE OF PARAPET & GUTTER LINE SB

Location	Station	Offset	Theoretical Grade Elevations	Theoretical Grade Elevations Adjusted for Grinding
S. End N. Approach	3257+49.36	-23.03	744.88	744.90
A3	3257+59.33	-23.10	744.82	744.84
A4	3257+69.29	-23.18	744.76	744.78
N. End N. Approach	3257+79.25	-23.28	744.70	744.72

W. EDGE OF PAVEMENT

Location	Station	Offset	Theoretical Grade Elevations	Theoretical Grade Elevations Adjusted for Grinding
S. End N. Approach	3257+57.15	-12.00	744.61	744.63
A3	3257+67.18	-12.00	744.55	744.57
A4	3257+77.23	-12.00	744.49	744.51
N. End N. Approach	3257+87.29	-12.00	744.42	744.45

SB PG

Location	Station	Offset	Theoretical Grade Elevations	Theoretical Grade Elevations Adjusted for Grinding
S. End N. Approach	3257+65.65	0.00	744.32	744.34
A3	3257+75.72	0.00	744.26	744.28
A4	3257+85.79	0.00	744.19	744.21
N. End N. Approach	3257+95.88	0.00	744.13	744.15

STAGE III/IV CONST. JT.

Location	Station	Offset	Theoretical Grade Elevations	Theoretical Grade Elevations Adjusted for Grinding
S. End N. Approach	3257+67.58	2.71	744.25	744.28
A3	3257+77.58	2.62	744.19	744.22
A4	3257+87.59	2.51	744.13	744.15
N. End N. Approach	3257+97.59	2.38	744.07	744.09

E. EDGE OF PAVEMENT

Location	Station	Offset	Theoretical Grade Elevations	Theoretical Grade Elevations Adjusted for Grinding
S. End N. Approach	3257+82.79	24.00	743.73	743.75
A3	3257+92.91	24.00	743.67	743.69
A4	3258+03.05	24.00	743.60	743.62
N. End N. Approach	3258+13.20	24.00	743.53	743.55

E. FACE OF PARAPET SB BRIDGE

Location	Station	Offset	Theoretical Grade Elevations	Theoretical Grade Elevations Adjusted for Grinding
S. End N. Approach	3257+89.88	33.86	743.49	743.51
A3	3257+99.93	33.73	743.42	743.45
A4	3258+09.99	33.58	743.36	743.38
N. End N. Approach	3258+20.04	33.41	743.29	743.31

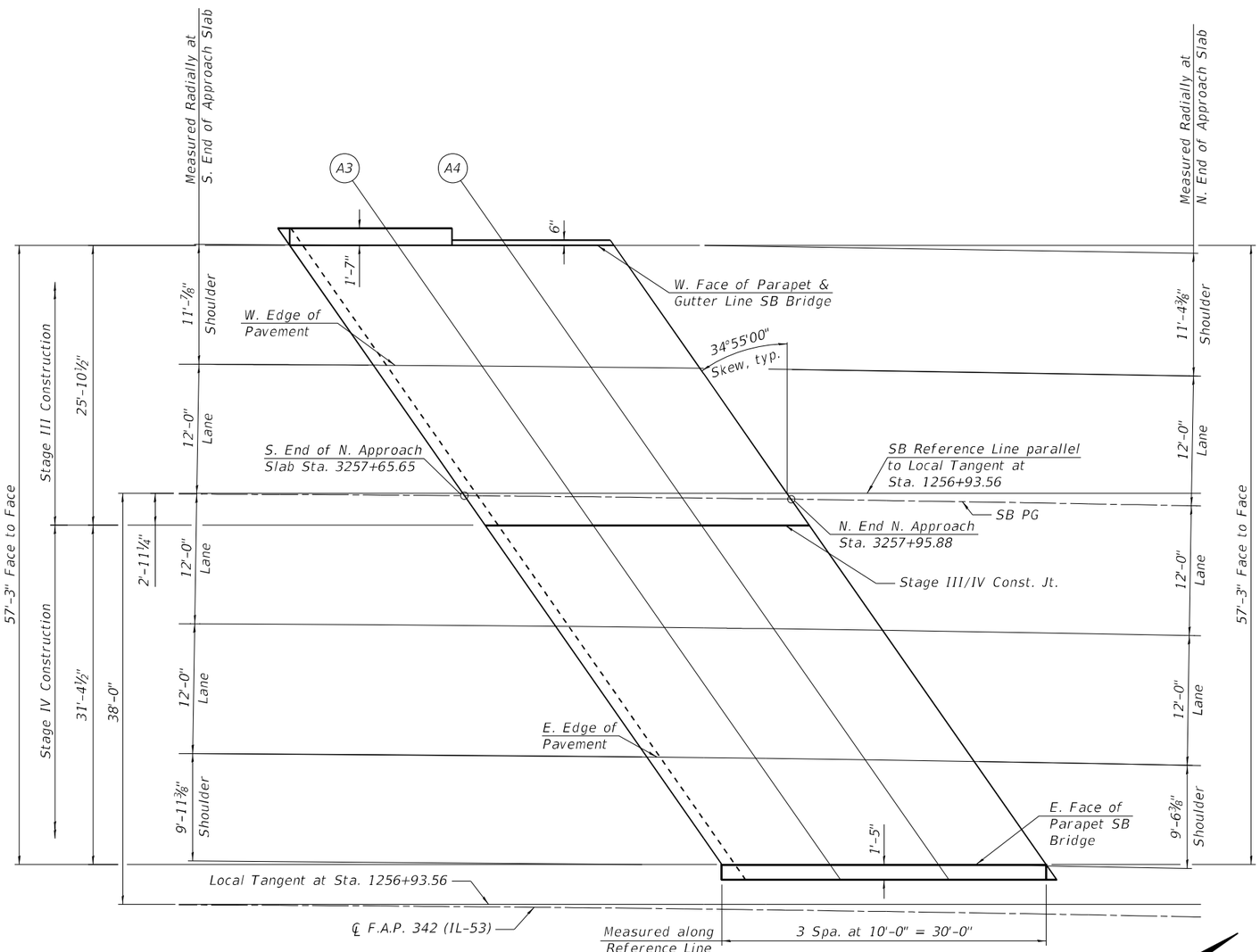

PLAN
North Approach

Notes:
1. All dimensions measured perpendicular to reference line unless otherwise noted.
2. For Offset sketch see sheet 2 of 48.

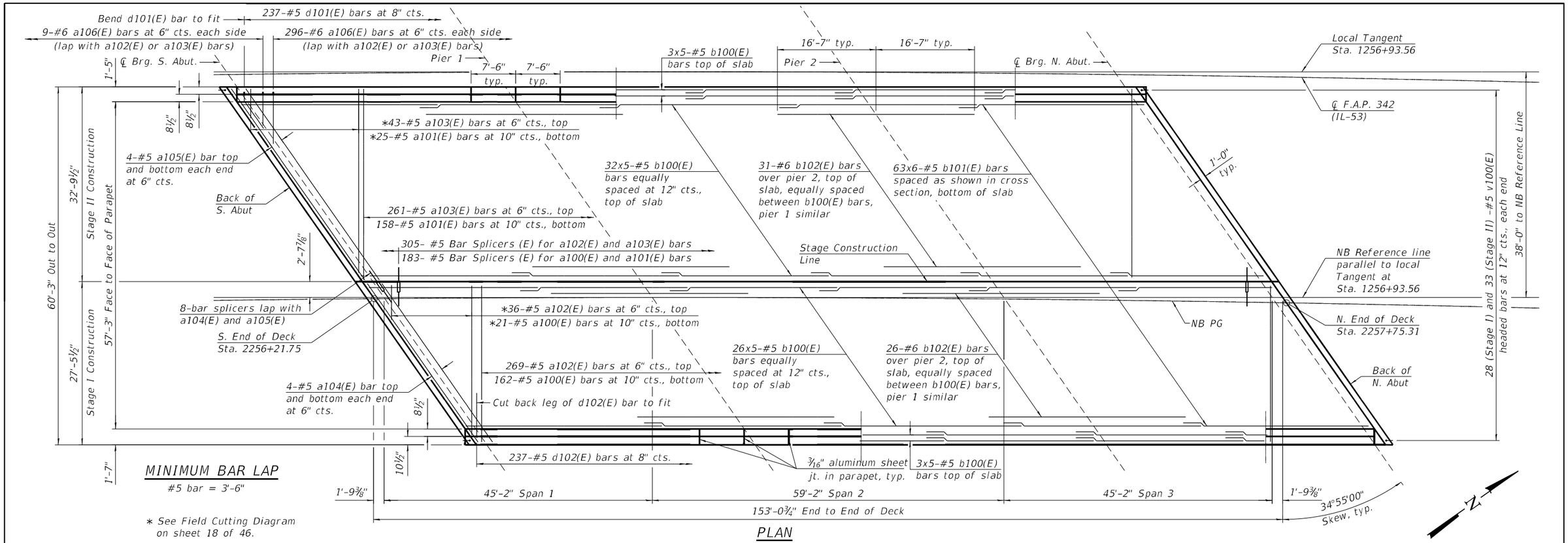

MINIMUM BAR LAP

#5 bar = 3'-6"

* See Field Cutting Diagram on sheet 18 of 46.

PLAN

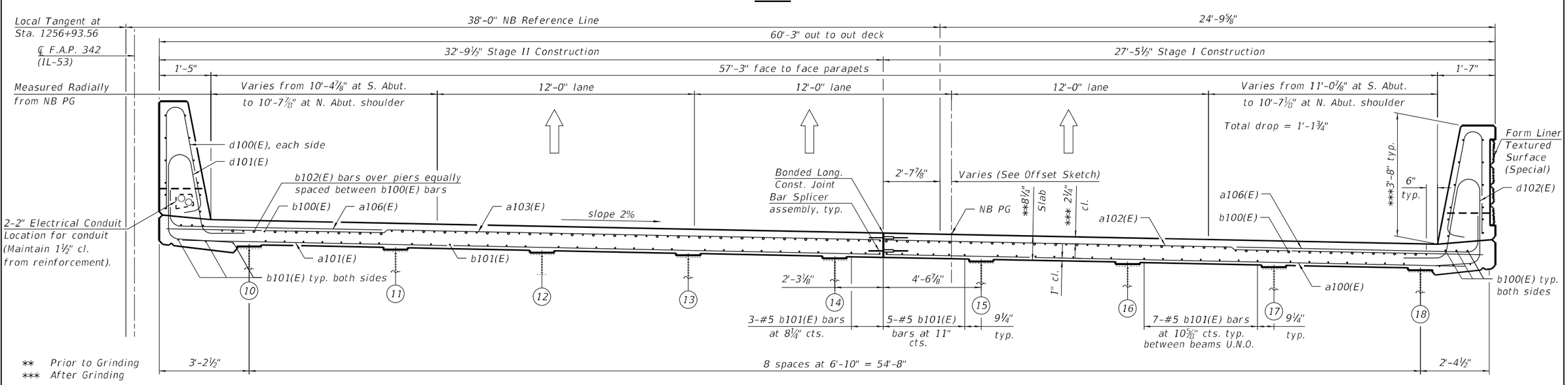

CROSS SECTION

(Looking North)

Notes:

1. See sheet 18 of 48 for superstructure details and Bill of Material.
2. Bars indicated thus 20 x 3-#5 etc. indicates 20 lines of bars with 3 lengths per line.

MODEL: Default
FILE NAME: S:\IOL\6300--6399\6346\113\Drawings\CAD\Micros-554\CAD_Sheets\0160375112062W38-016-DPCS.dgn
9/20/2024 2:14:24 PM

STRAND ASSOCIATES
1170 SOUTH HOUBOLT ROAD
JOLIET, ILLINOIS 60431
(815) 744-4200
IDFPR NO. 184-001273

USER NAME = codyh	DESIGNED - DMH	REVISED -	
	CHECKED - KRB	REVISED -	
PLOT SCALE = 0:2.0000 ':" / in.	DRAWN - DMH	REVISED -	
PLOT DATE = 9/20/2024	CHECKED - TJE	REVISED -	

STATE OF ILLINOIS
DEPARTMENT OF TRANSPORTATION

DECK PLAN AND CROSS SECTION
STRUCTURE NO. 016-0375 (NB)

SHEET 16 OF 48 SHEETS

F.A. RTE.	SECTION	COUNTY	TOTAL SHEETS	SHEET NO.
342	(531) BR 23	COOK	1211	774
		CONTRACT NO. 62W38		
		ILLINOIS	FED. AID PROJECT	

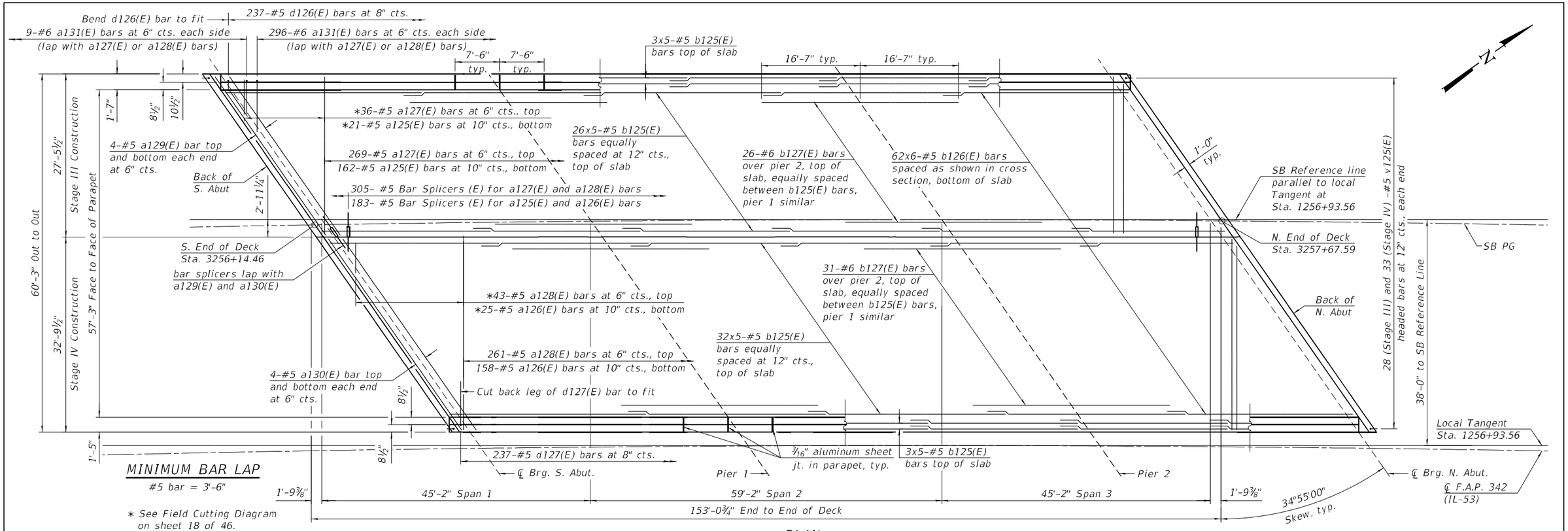

PLAN

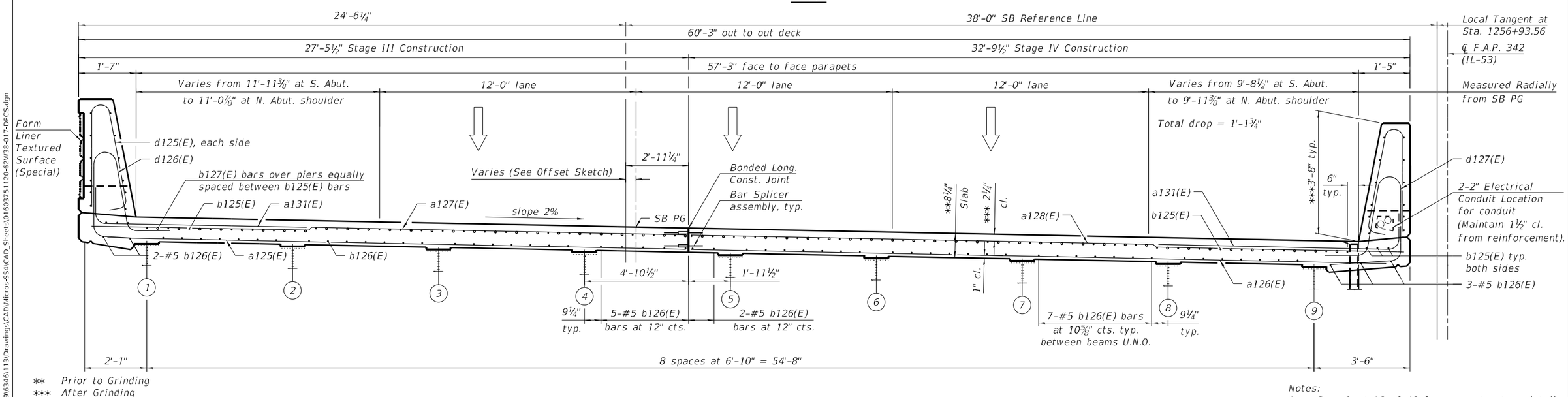

** Prior to Grinding
*** After Grinding

CROSS SECTION
(Looking North)

Notes:
1. See sheet 18 of 48 for superstructure details and Bill of Material.
2. Bars indicated thus 20 x 3-#5 etc. indicates 20 lines of bars with 3 lengths per line.

MODEL: Default
FILE NAME: S:\IOL\6300--6399\6346\113\Drawings\CAD\Micro-SSH\CAD_Sheets\0160375120-62W38-017-DPCS.dgn
9/20/2024 2:14:25 PM

STRAND ASSOCIATES
1170 SOUTH HOUBOLT ROAD
JOLIET, ILLINOIS 60431
(815) 744-4200
IDFPR NO. 184-001273

USER NAME = codyh	DESIGNED - DMH	REVISED -	
	CHECKED - KRB	REVISED -	
PLOT SCALE = 0:2.0000 ':" / in.	DRAWN - DMH	REVISED -	
PLOT DATE = 9/20/2024	CHECKED - TJE	REVISED -	

STATE OF ILLINOIS
DEPARTMENT OF TRANSPORTATION

DECK PLAN AND CROSS SECTION
STRUCTURE NO. 016-1120 (SB)

SHEET 17 OF 48 SHEETS

F.A. RTE.	SECTION	COUNTY	TOTAL SHEETS	SHEET NO.
342	(531) BR 23	COOK	1211	775

CONTRACT NO. 62W38
ILLINOIS | FED. AID PROJECT

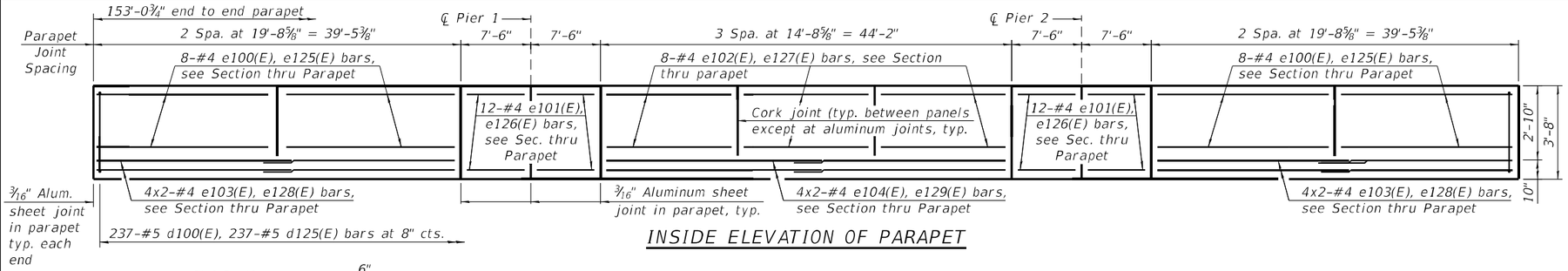

INSIDE ELEVATION OF PARAPET

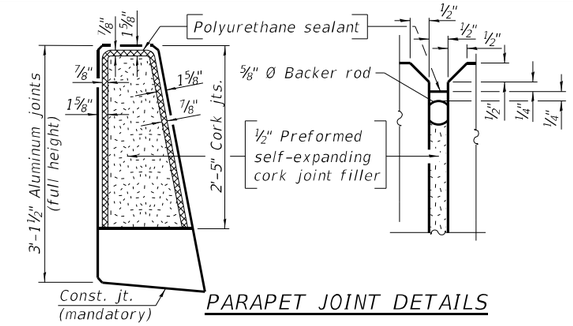

PARAPET JOINT DETAILS

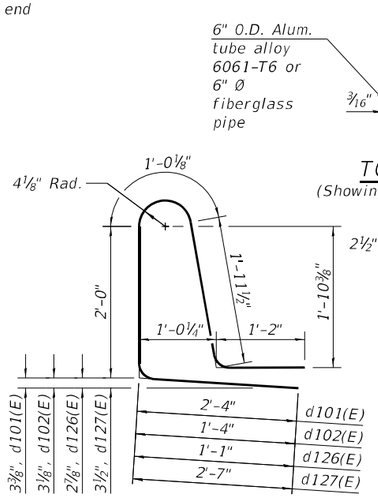

TOP PLAN
(Showing aluminum tube)

SECTION A-A
*Dimension as required by pipe clamp

TOP PLAN

FIBERGLASS PIPE

BAR d101(E), d102(E), d126(E) & d127(E)

BAR d100(E) & d125(E)

BAR v100(E), v125(E)
(Headed)

Note: Headed bars shall conform to ASTM A970

BAR a106(E) & a131(E)

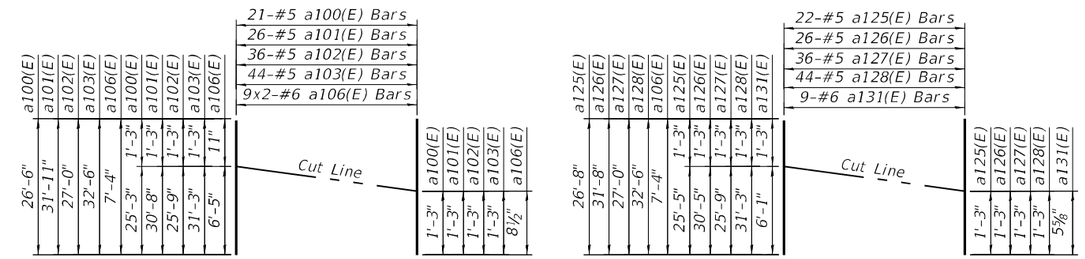

NORTHBOUND DECK FIELD CUTTING DIAGRAM

SOUTHBOUND DECK FIELD CUTTING DIAGRAM

* Order bars full length. Cut to fit skew and use remainder of bars in opposite end of deck (except a106(E) and a131(E) bars). Bars shorter than minimum lap length do not need to be placed in the deck.

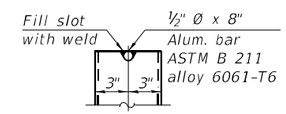

ALUMINUM TUBE

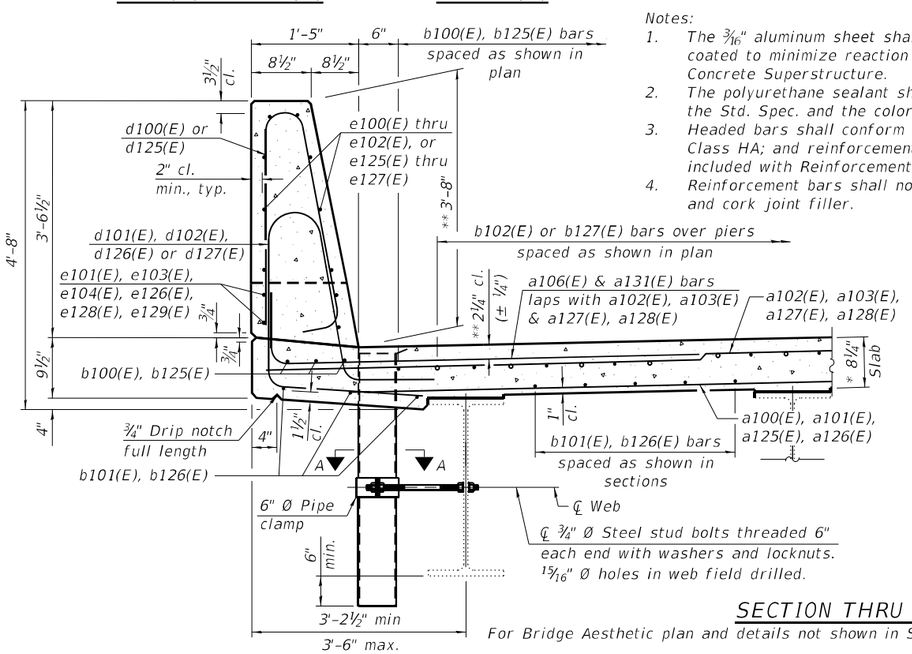

Notes:

1. The 3/16" aluminum sheet shall be ASTM B 209 alloy 3003-H14 and coated to minimize reaction with wet concrete. Cost included with Concrete Superstructure.
2. The polyurethane sealant shall be according to Article 1050.04 of the Std. Spec. and the color shall be gray.
3. Headed bars shall conform to ASTM A970 with threaded attachment; Class HA; and reinforcement bars conforming to ASTM A706. Cost included with Reinforcement Bars, Epoxy Coated.
4. Reinforcement bars shall not pass thru aluminum sheets and cork joint filler.

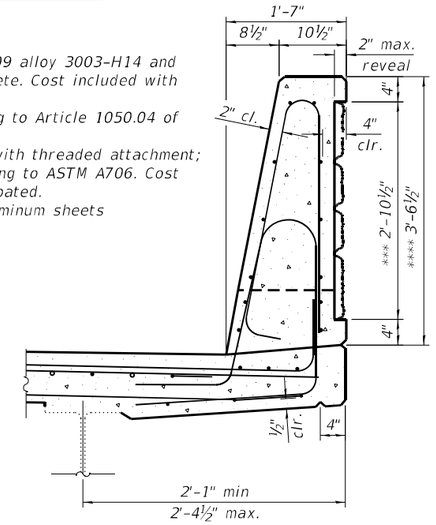

* Prior to Grinding
** After Grinding
*** Pay limits for Concrete Sealant, Special
**** Pay limits for Form Liner textured surface (Special)

SECTION THRU PARAPET

For Bridge Aesthetic plan and details not shown in Structure Plans, see Bridge Aesthetic Plans.

SUPERSTRUCTURE BILL OF MATERIAL

Structure No. 016-0375 (NB)

Bar	No.	Size	Length	Shape
a100(E)	183	#5	26'-8"	
a101(E)	183	#5	31'-11"	
a102(E)	305	#5	27'-1"	
a103(E)	304	#5	32'-6"	
a104(E)	16	#5	33'-0"	
a105(E)	16	#5	39'-8"	
a106(E)	609	#6	8'-4"	
b100(E)	320	#5	33'-5"	
b101(E)	378	#5	28'-5"	
b102(E)	114	#6	33'-2"	
d100(E)	474	#5	7'-0"	
d101(E)	237	#5	8'-6"	
d102(E)	237	#5	7'-6"	
e100(E)	64	#4	19'-4"	
e101(E)	96	#4	7'-2"	
e102(E)	48	#4	14'-4"	
e103(E)	32	#4	20'-9"	
e104(E)	16	#4	23'-2"	
v100(E)	122	#5	3'-1"	
Concrete Superstructures		CU YD	235.6	
Protective Coat		SQ YD	1,129	
Reinforcement Bars, Epoxy Coated		POUND	67,350	
Bar Splicers		EACH	504	
Bar Terminators		EACH	122	
Bridge Deck Grooving (Longitudinal)		SQ YD	929	
Form Liner Textured Surface (Special)		SQ FT	510	
Architectural Form Liner		SQ YD	4	
Concrete Color Additive		CU YD	25.0	
Diamond Grinding (Bridge Section)		SQ YD	912	
Concrete Sealant (Special)		SQ YD	46	

Structure No. 016-1120 (SB)

Bar	No.	Size	Length	Shape
a125(E)	183	#5	26'-10"	
a126(E)	183	#5	31'-8"	
a127(E)	305	#5	27'-2"	
a128(E)	304	#5	32'-6"	
a129(E)	16	#5	33'-0"	
a130(E)	16	#5	39'-8"	
a131(E)	610	#6	8'-4"	
b125(E)	320	#5	33'-5"	
b126(E)	366	#5	28'-5"	
b127(E)	114	#6	33'-2"	
d125(E)	474	#5	7'-0"	
d126(E)	237	#5	7'-3"	
d127(E)	237	#5	8'-9"	
e125(E)	64	#4	19'-4"	
e126(E)	96	#4	7'-2"	
e127(E)	48	#4	14'-4"	
e128(E)	32	#4	20'-9"	
e129(E)	16	#4	23'-2"	
v125(E)	122	#5	3'-1"	
Concrete Superstructures		CU YD	234.1	
Protective Coat		SQ YD	1,122	
Reinforcement Bars, Epoxy Coated		POUND	67,010	
Bar Splicers		EACH	504	
Bar Terminators		EACH	122	
Bridge Deck Grooving (Longitudinal)		SQ YD	923	
Form Liner Textured Surface (Special)		SQ FT	510	
Architectural Form Liner		SQ YD	4	
Concrete Color Additive		CU YD	24.8	
Diamond Grinding (Bridge Section)		SQ YD	906	
Concrete Sealant (Special)		SQ YD	46	

Bars indicated thus 1 x 2-#4 etc. indicates 1 line of bars with 2 lengths per line.

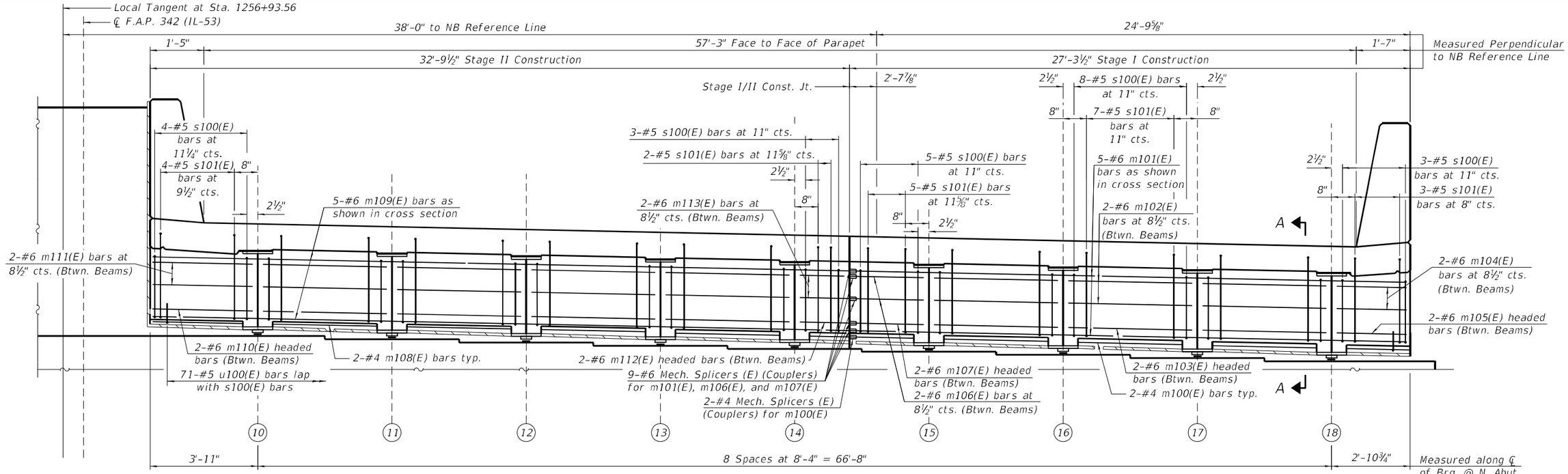

DIAPHRAGM ELEVATION AT NORTH ABUTMENT

(Looking North)

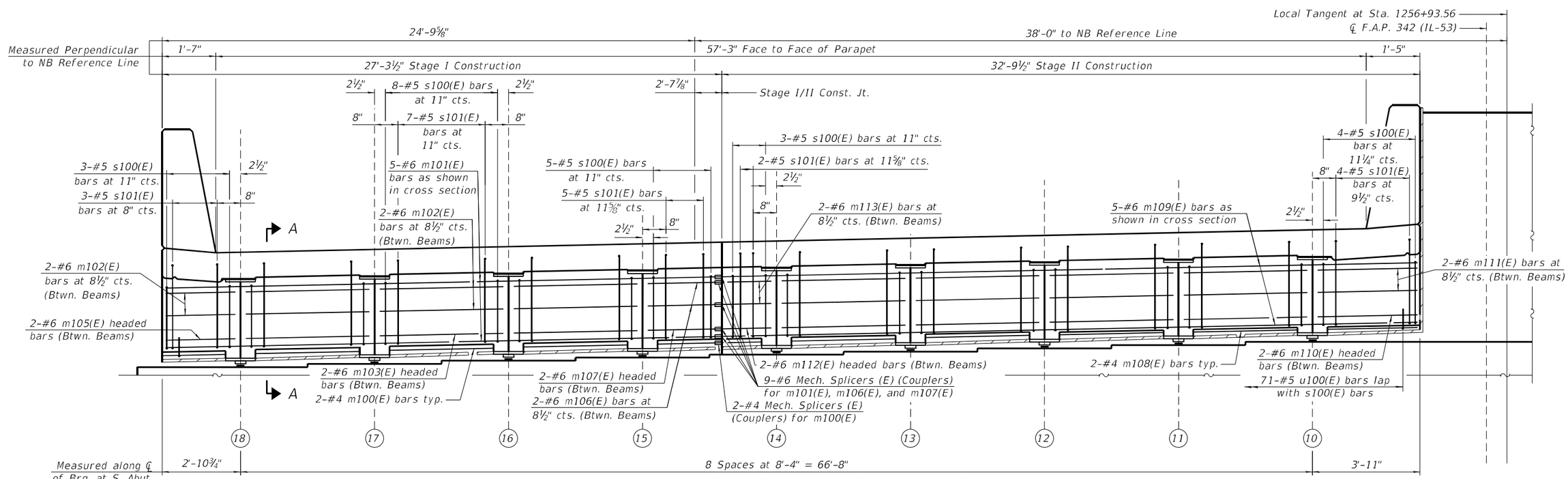

DIAPHRAGM ELEVATION AT SOUTH ABUTMENT

(Looking South)

Notes:
1. See sheet 21 of 48 for details and sections.
2. For Offset sketch, see sheet 2 of 48.

MODEL: Default
FILE NAME: S:\OL\6300-6399\6346\113\Drawings\CAD\Micros-SS4\CAD_Sheets\0160375112062W38-019-SID1.dgn

STRAND ASSOCIATES
1170 SOUTH HOUBOLT ROAD
JOLIET, ILLINOIS 60431
(815) 744-4200
IDFPR NO. 184-001273

USER NAME = codyh	DESIGNED - TJE	REVISED -	
	CHECKED - KRB	REVISED -	
PLOT SCALE = 0:2.0000 ':" / in.	DRAWN - CJH	REVISED -	
PLOT DATE = 9/20/2024	CHECKED - TJE	REVISED -	

STATE OF ILLINOIS
DEPARTMENT OF TRANSPORTATION

SEMI-INTEGRAL DIAPHRAGM (1 OF 2)
STRUCTURE NO. 016-0375 (NB)

SHEET 19 OF 48 SHEETS

F.A. RTE.	SECTION	COUNTY	TOTAL SHEETS	SHEET NO.
342	(531) BR 23	COOK	1211	777
		CONTRACT NO. 62W38		
	ILLINOIS	FED. AID PROJECT		

9/20/2024 2:14:28 PM

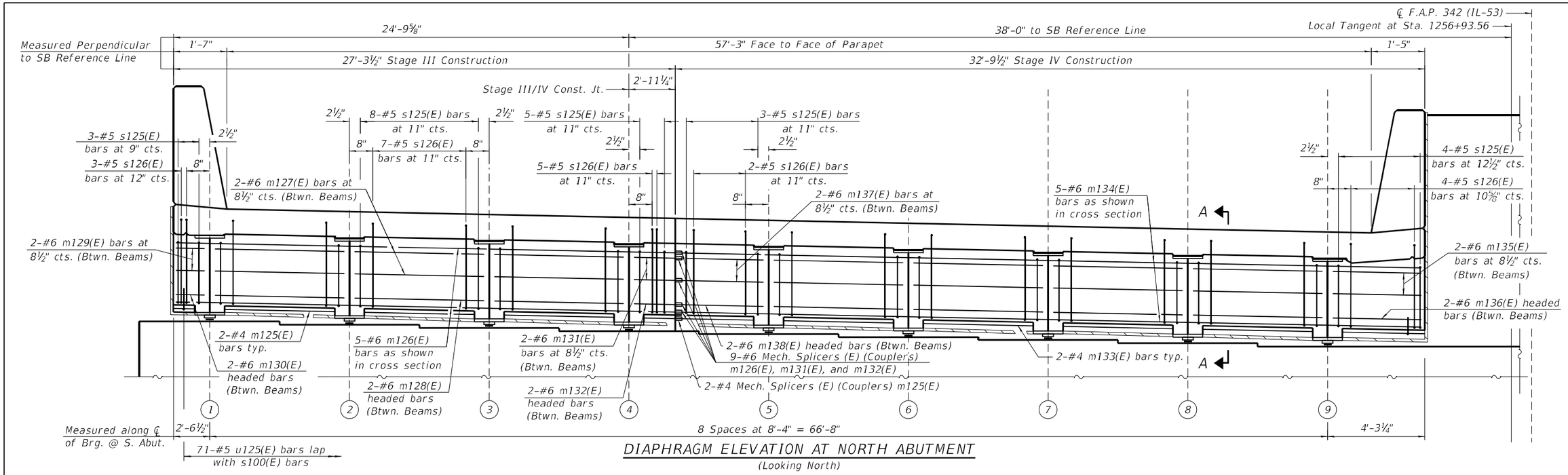

DIAPHRAGM ELEVATION AT NORTH ABUTMENT

(Looking North)

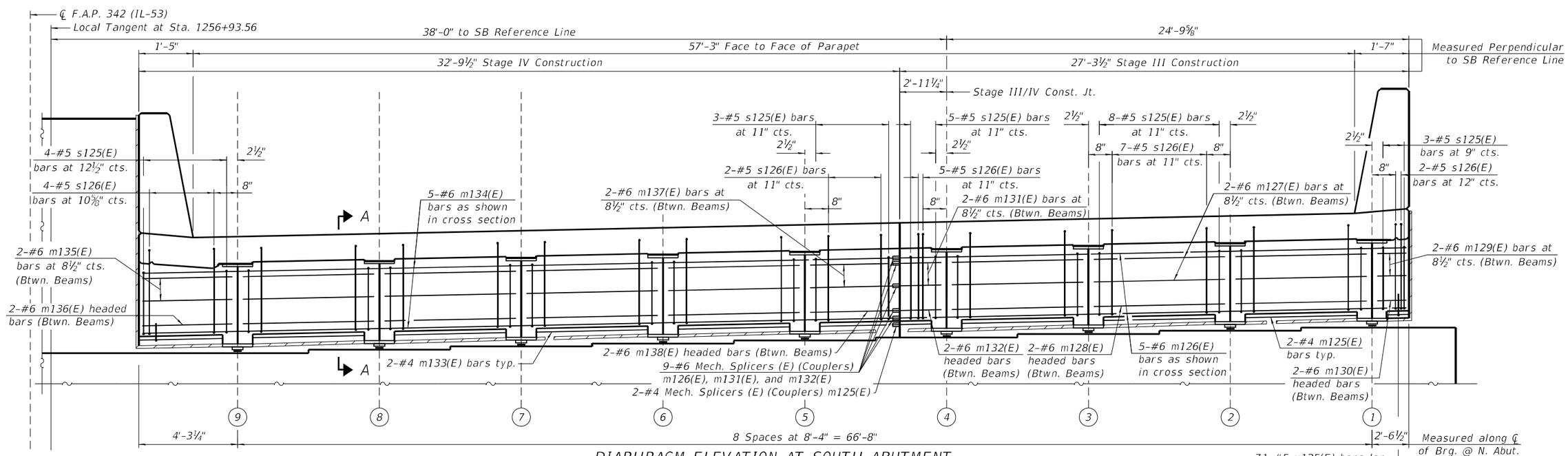

DIAPHRAGM ELEVATION AT SOUTH ABUTMENT

(Looking North)

Notes:
1. See sheet 21 of 48 for details and sections.
2. For offset sketch see sheet 2 of 48.

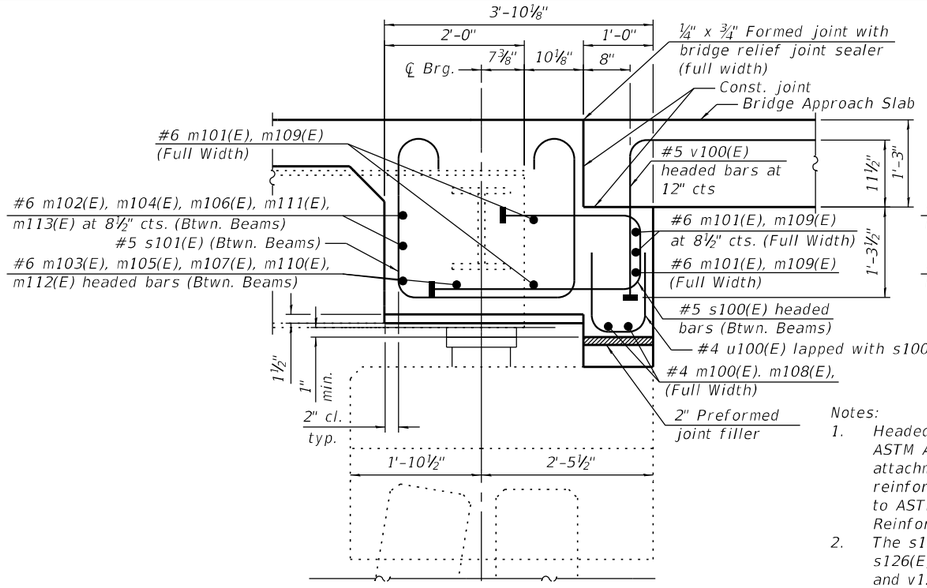

SECTION A-A

(Horiz. dim. at Rt. <'s to Bk. of Abut.)

Notes:

1. Headed bars shall conform to ASTM A970 with threaded attachment; Class HA; and reinforcement bars conforming to ASTM A706. Cost included with Reinforcement Bars, Epoxy Coated.
2. The s100(E), s101(E), s125(E), s126(E), u100(E), u125(E), and v100(E), and v125(E) bars are placed parallel to beams and spaced at right angles to beams.

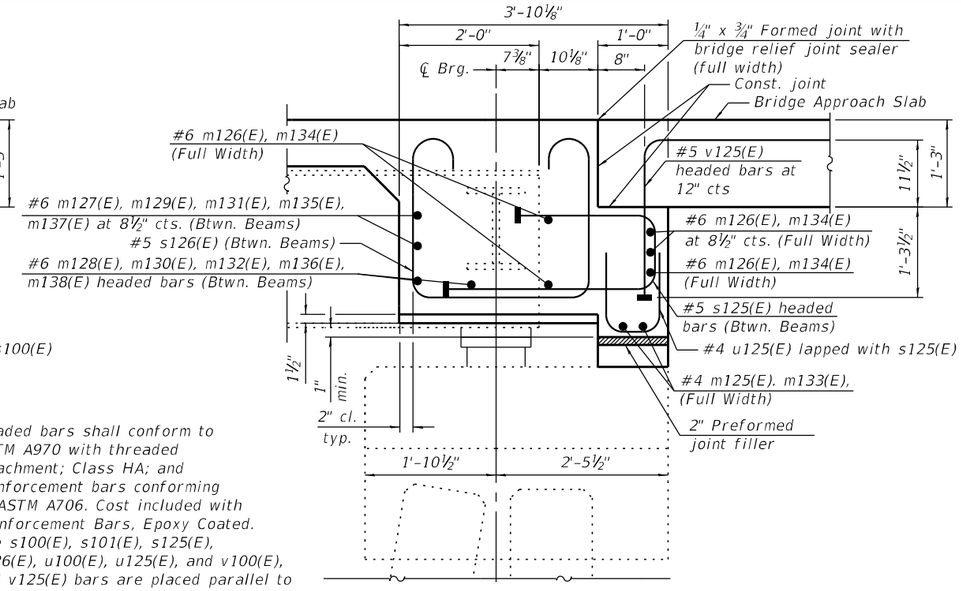

SECTION B-B

(Horiz. dim. at Rt. <'s to Bk. of Abut.)

SEMI-INTERGRAL DIAPHGRAM BILL OF MATERIAL

Structure No. 016-0375 (NB)

Bar	No.	Size	Length	Shape
m100(E)	4	#4	33'-0"	
m101(E)	10	#6	33'-0"	
m102(E)	28	#6	8'-0"	
m103(E)	28	#6	8'-0"	
m104(E)	4	#6	2'-4"	
m105(E)	4	#6	2'-4"	
m106(E)	4	#6	5'-3"	
m107(E)	4	#6	5'-3"	
m108(E)	4	#4	39'-9"	
m109(E)	10	#6	39'-9"	
m110(E)	4	#6	3'-7"	
m111(E)	4	#6	3'-7"	
m112(E)	4	#6	2'-5"	
m113(E)	4	#6	2'-5"	
s100(E)	142	#5	6'-8"	
s101(E)	126	#5	9'-0"	
u100(E)	142	#4	3'-4"	
Concrete Superstructures			CU YD	40.7
Reinforcement Bars, Epoxy Coated			POUND	4,630
Mechanical Splicers			EACH	22
Bar Terminators			EACH	284
Geocomposite Wall Drain			SQ YD	223
Structure Excavation			CU YD	658
Granular Backfill for			CU YD	548
Pipe UnderDrains for Structures 4"			FOOT	186

Structure No. 016-1120 (SB)

Bar	No.	Size	Length	Shape
m125(E)	4	#4	33'-0"	
m126(E)	10	#6	33'-0"	
m127(E)	28	#6	8'-0"	
m128(E)	28	#6	8'-0"	
m129(E)	4	#6	2'-0"	
m130(E)	4	#6	2'-0"	
m131(E)	4	#6	5'-10"	
m132(E)	4	#6	5'-10"	
m133(E)	4	#4	39'-9"	
m134(E)	10	#6	39'-9"	
m135(E)	4	#6	3'-11"	
m136(E)	4	#6	3'-11"	
m137(E)	4	#6	2'-2"	
m138(E)	4	#6	2'-2"	
s125(E)	142	#5	6'-8"	
s126(E)	126	#5	9'-0"	
u125(E)	142	#4	3'-4"	
Concrete Superstructures			CU YD	40.8
Reinforcement Bars, Epoxy Coated			POUND	4,610
Mechanical Splicers			EACH	22
Bar Terminators			EACH	284
Geocomposite Wall Drain			SQ YD	243
Structure Excavation			CU YD	676
Granular Backfill for			CU YD	560
Pipe UnderDrains for Structures 4"			FOOT	186

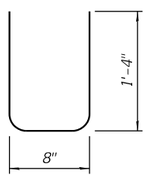

BAR u100(E), u125(E)

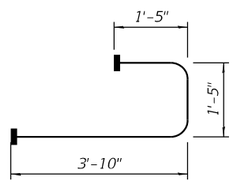

BAR s100(E), s125(E)

(Headed)

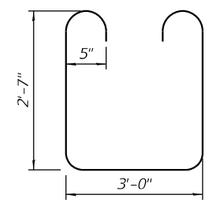

BAR s101(E), s126(E)

Appraoch Slab Edge Elevations				
Elev.	S.N. 016-1120		S.N. 016-0375	
	S. Abut	N. Abut	S. Abut	N. Abut
A	745.48	744.89	745.78	744.87
B	744.92	744.27	745.06	744.06
C	744.97	744.33	744.99	743.96
D	744.24	743.50	744.46	743.38

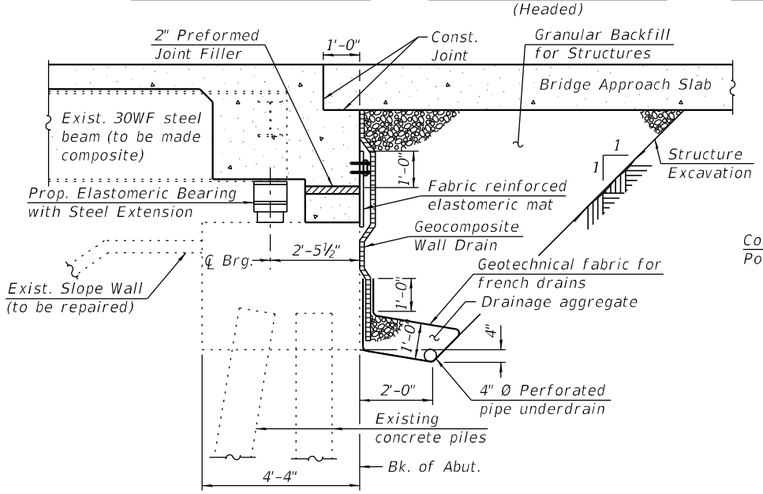

SECTION THRU SEMI-INTEGRAL ABUTMENT

(Horiz. dim. at Rt. <'s to Bk. of Abut.)

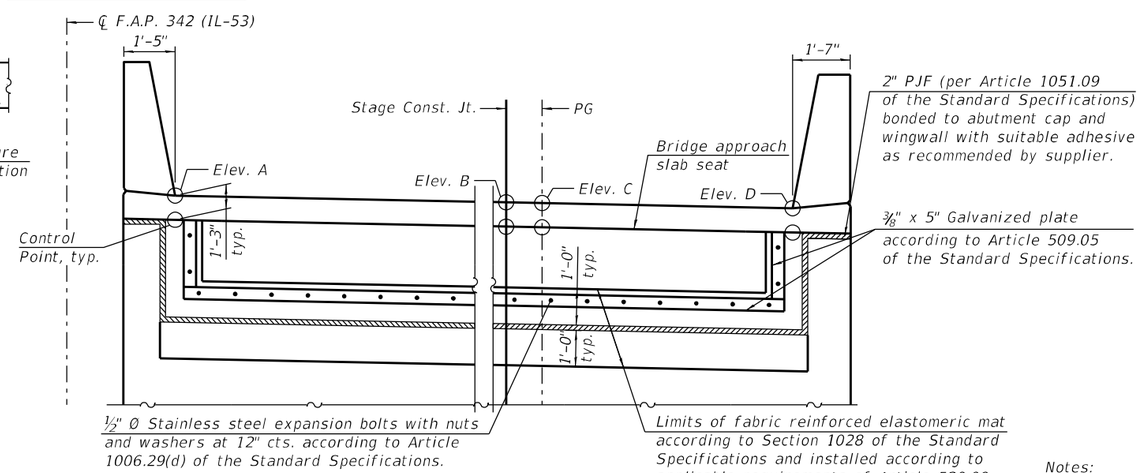

ELEVATION

(Looking at back of abutment)

Notes:

1. All drainage system components shall extend to 2'-0" from the end of each wingwall except an outlet pipe shall extend until intersecting with the side slopes. The pipes shall drain into concrete headwalls. (See Article 601.05 of the Standard Specifications and Highway Standard 601101).
2. Cost of fabric reinforced elastomeric mat, galvanized plate, stainless steel expansion bolts with nuts and washers and installation are included in the cost of Concrete Superstructure.

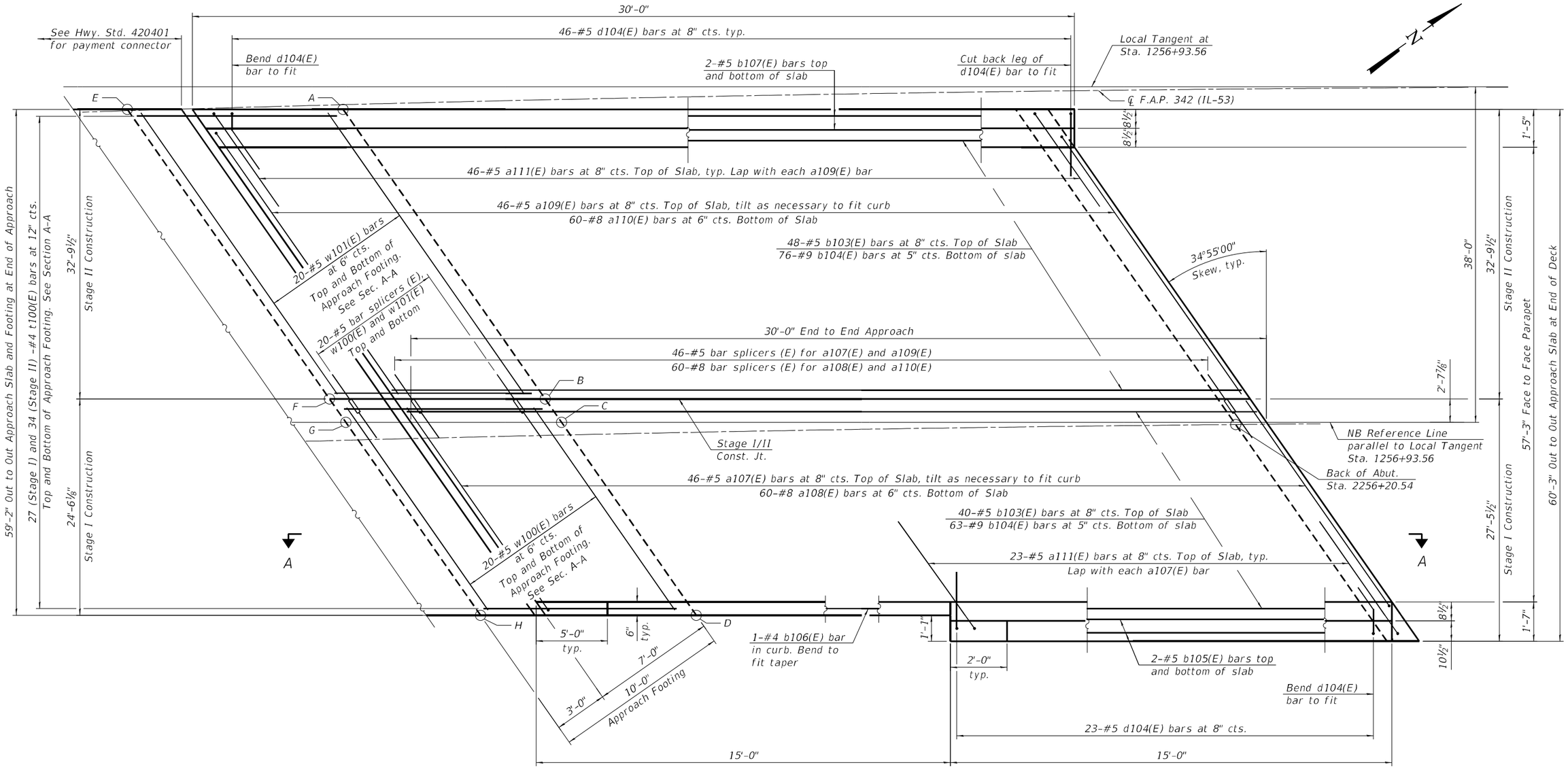

PLAN

TOP AND BOTTOM ELEVATIONS FOR APPROACH FOOTING

Point	Top	Bottom
A	744.61	743.78
B	743.88	743.04
C	743.81	742.97
D	743.28	742.44
E	744.65	743.82
F	743.92	743.09
G	743.85	743.02
H	743.33	742.49

Notes:
1. See sheet 24 of 48 for cross section.
2. See sheet 28 of 48 for Section A-A and Bill of Materials.

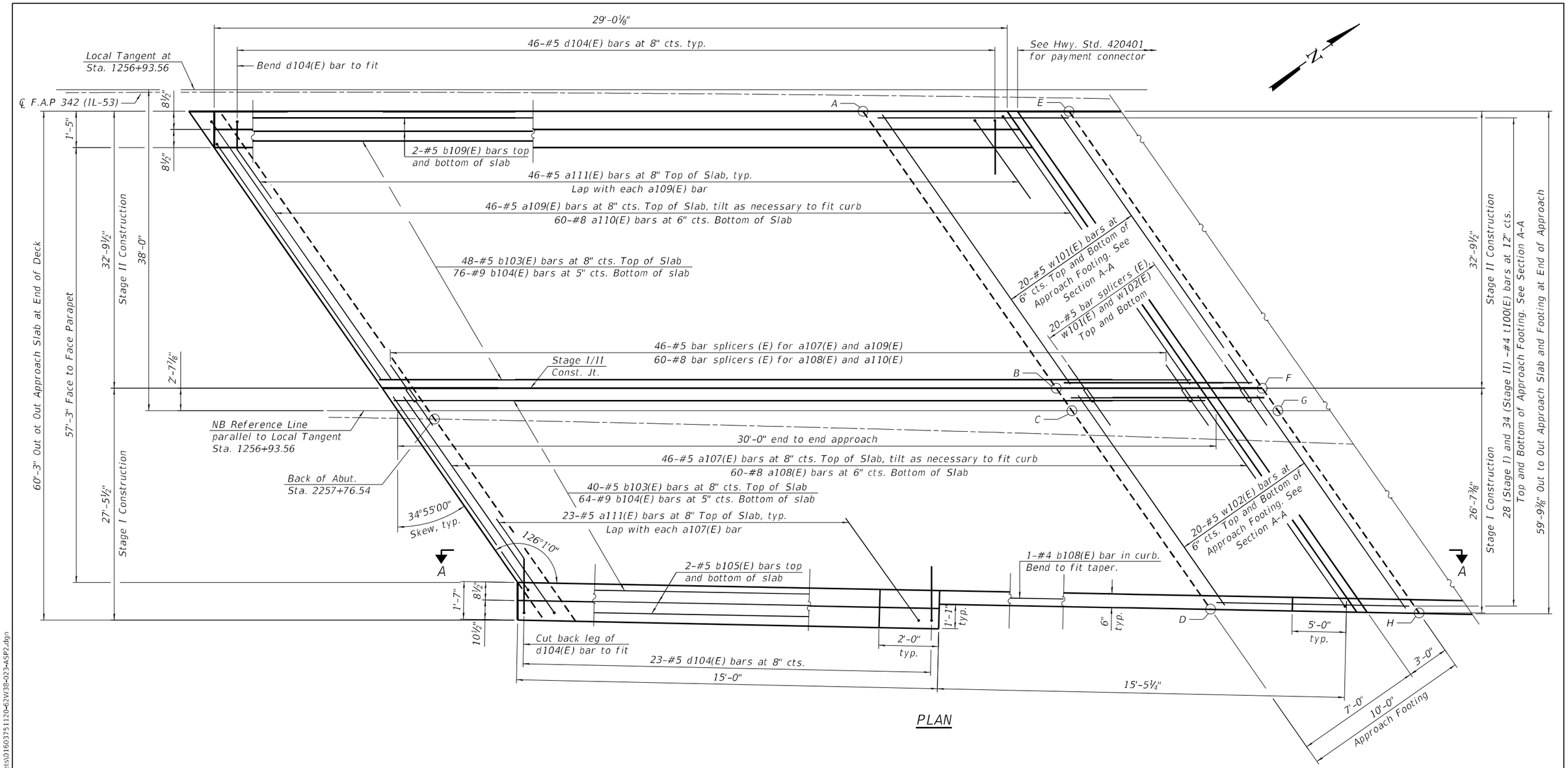

PLAN

TOP AND BOTTOM ELEVATIONS FOR APPROACH FOOTING

Point	Top	Bottom
A	743.47	742.64
B	742.61	741.78
C	722.60	721.77
D	741.91	741.08
E	743.37	742.53
F	742.50	741.66
G	722.56	721.73
H	741.78	740.95

Notes:
1. See sheet 24 of 48 for cross section.
2. See sheet 28 of 48 for Section A-A and Bill of Materials.

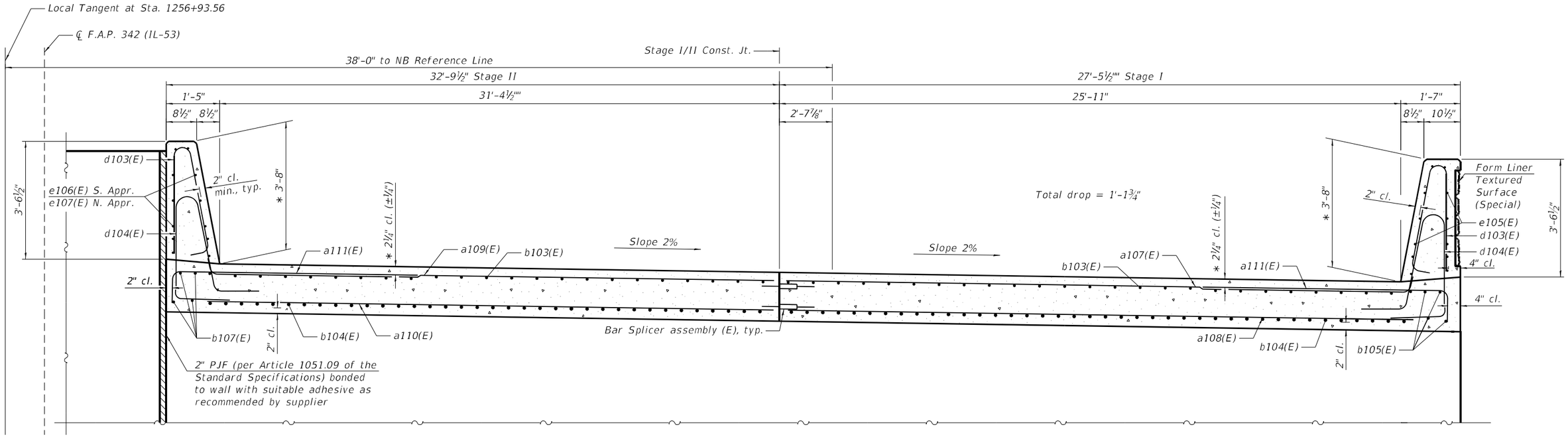

CROSS SECTION NEAR ABUTMENT

(Looking North)

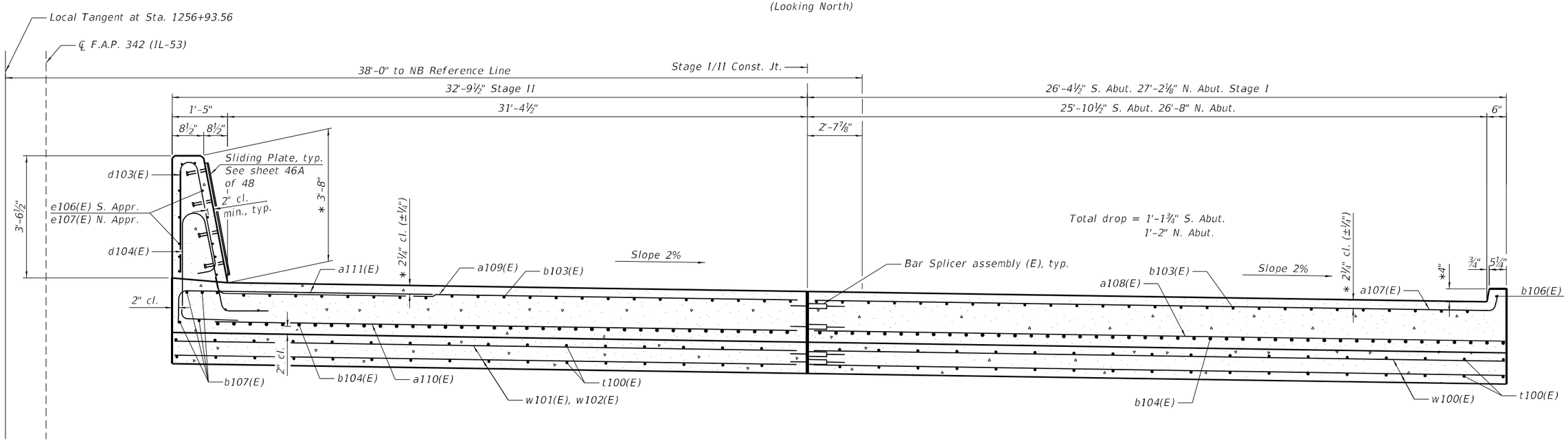

CROSS SECTION AT APPROACH FOOTING

(Looking North)

Notes:
1. See sheet 28 of 48 for details and bill of materials.

* after grinding

MODEL: Default
FILE NAME: S:\IDL\6300-6399\6346\113\Drawings\CAD\Micro-SS4\CAD_Sheets\0160375112O-62W38-024-ASCS.dgn
9/20/2024 2:14:35 PM

STRAND ASSOCIATES
1170 SOUTH HOUBOLT ROAD
JOLIET, ILLINOIS 60431
(815) 744-4200
IDFPR NO. 184-001273

USER NAME = codyh	DESIGNED - TJE	REVISED -	
	CHECKED - KRB	REVISED -	
PLOT SCALE = 0:2.0000 ':" / in.	DRAWN - CJH	REVISED -	
PLOT DATE = 9/20/2024	CHECKED - TJE	REVISED -	

STATE OF ILLINOIS
DEPARTMENT OF TRANSPORTATION

APPROACH SLAB CROSS SECTION
STRUCTURE NO. 016-0375 (NB)

SHEET 24 OF 48 SHEETS

F.A. RTE.	SECTION	COUNTY	TOTAL SHEETS	SHEET NO.
342	(531) BR 23	COOK	1211	782
		CONTRACT NO. 62W38		
	ILLINOIS	FED. AID PROJECT		

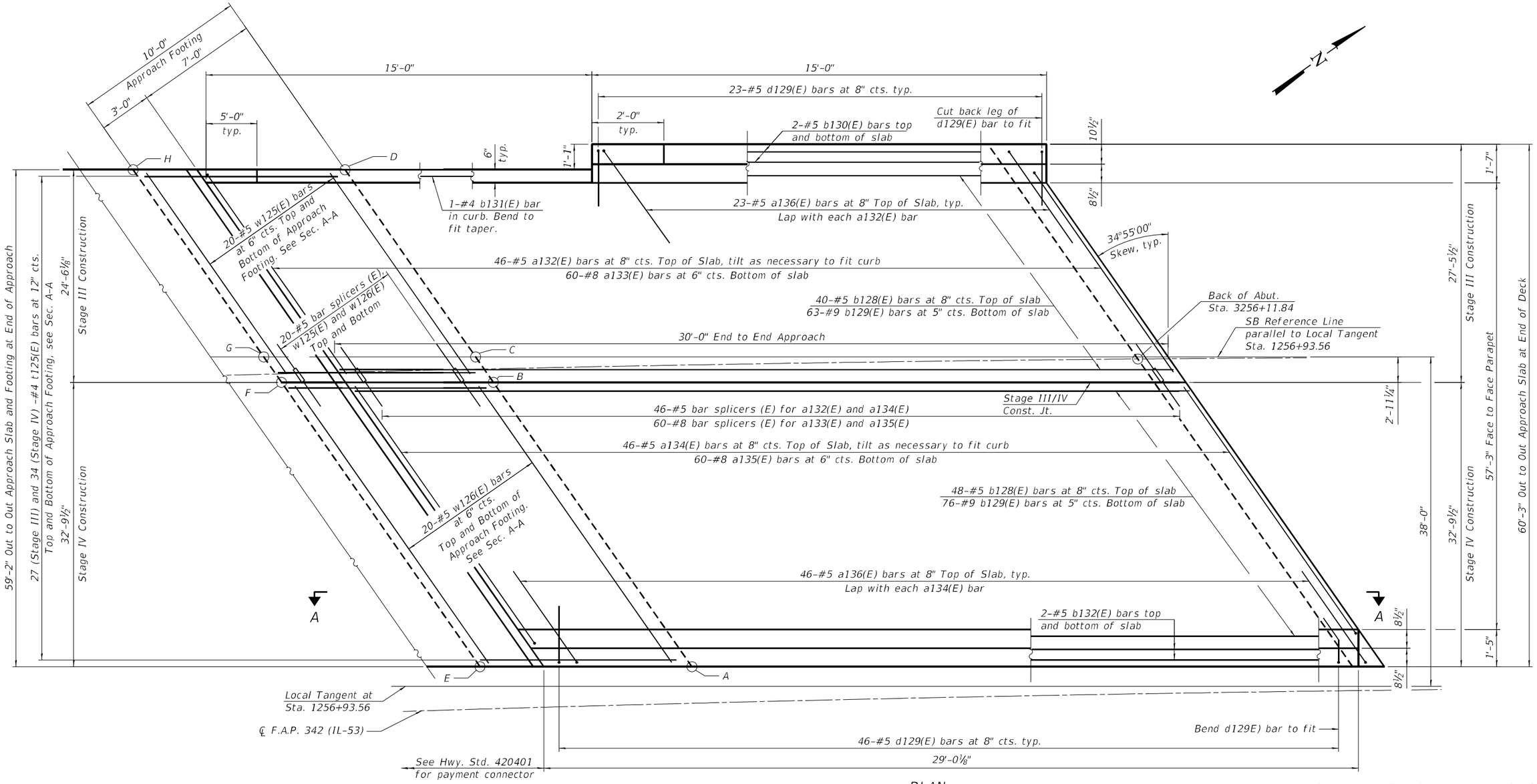

PLAN

TOP AND BOTTOM ELEVATIONS FOR APPROACH FOOTING

Point	Top	Bottom
A	742.99	742.16
B	743.70	742.87
C	743.74	742.90
D	744.26	743.43
E	743.02	742.19
F	743.73	742.89
G	743.76	742.92
H	744.28	743.45

Notes:
1. See sheet 27 of 48 for cross section.
2. See sheet 28 of 48 for Section A-A and Bill of Materials.

STRAND ASSOCIATES®
1170 SOUTH HOUBOLT ROAD
JOLIET, ILLINOIS 60431
(815) 744-4200
IDFPR NO. 184-001273

USER NAME = codyh	DESIGNED - TJE	REVISED -	
	CHECKED - KRB	REVISED -	
PLOT SCALE = 0:2.0000 ':" / in.	DRAWN - CJH	REVISED -	
PLOT DATE = 9/20/2024	CHECKED - TJE	REVISED -	

STATE OF ILLINOIS
DEPARTMENT OF TRANSPORTATION

SOUTH APPROACH SLAB PLAN (1 OF 2)
STRUCTURE NO. 016-1120 (SB)

SHEET 25 OF 48 SHEETS

F.A. RTE.	SECTION	COUNTY	TOTAL SHEETS	SHEET NO.
342	(531) BR 23	COOK	1211	783
		CONTRACT NO. 62W38		
	ILLINOIS	FED. AID PROJECT		

MODEL: Default
FILE NAME: S:\IDOL\6300-6399\6346\113\Drawings\CAD\Micros-SSA\CAD_Sheets\0160375112O-62W38-025-ASP1.dgn
9/20/2024 2:14:36 PM

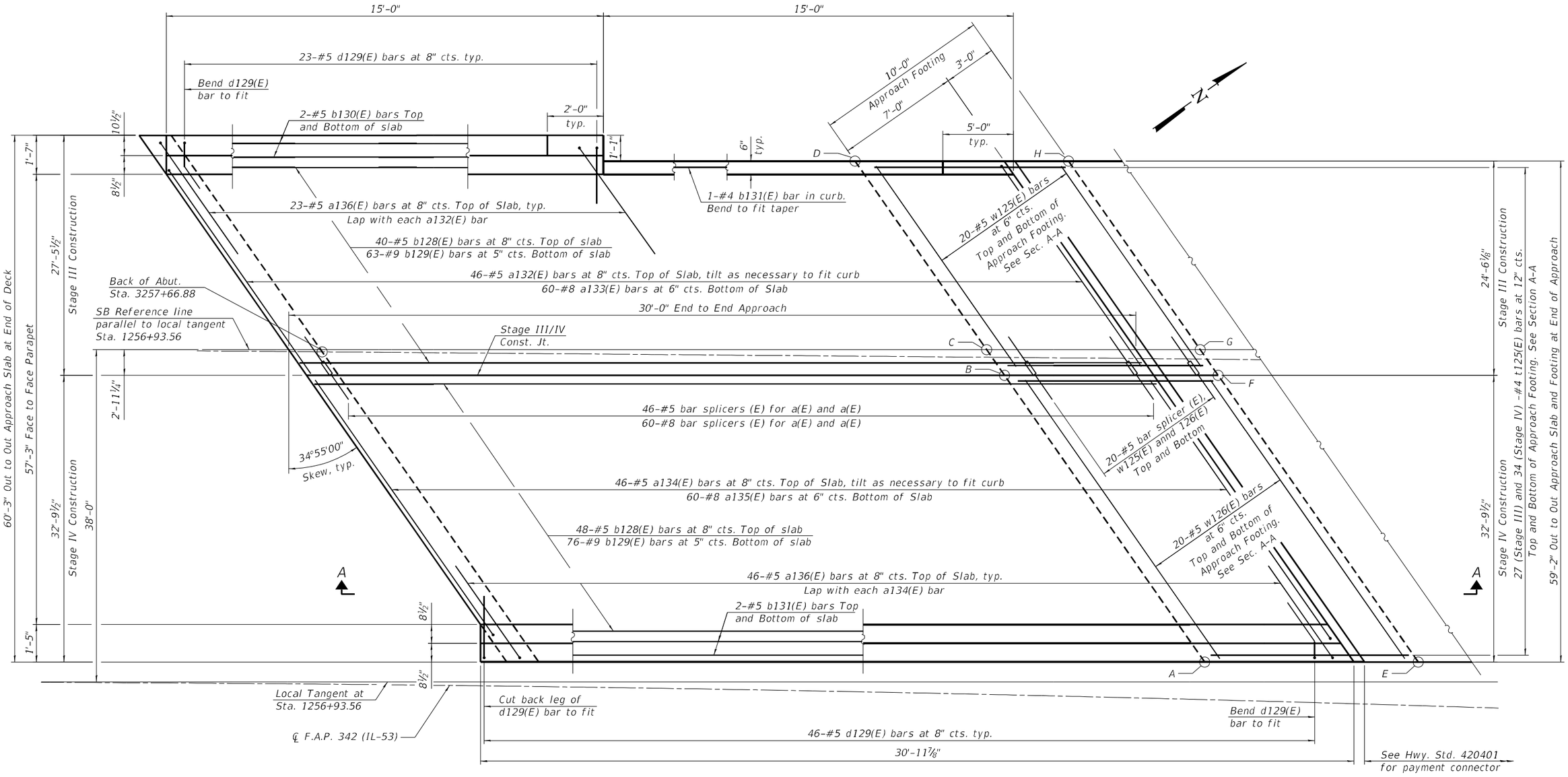

PLAN

TOP AND BOTTOM ELEVATIONS FOR APPROACH FOOTING

Point	Top	Bottom
A	742.06	741.23
B	742.87	742.04
C	722.24	721.41
D	743.52	742.68
E	741.97	741.14
F	742.79	741.96
G	722.20	721.37
H	743.44	742.61

Notes:
1. See sheet 27 of 48 for cross section.
2. See sheet 28 of 48 for Section A-A and Bill of Materials.

STRAND ASSOCIATES
1170 SOUTH HOUBOLT ROAD
JOLIET, ILLINOIS 60431
(815) 744-4200
IDFPR NO. 184-001273

USER NAME = codyh	DESIGNED - TJE	REVISED -	
	CHECKED - KRB	REVISED -	
PLOT SCALE = 0:2.0000 ':" / in.	DRAWN - CJH	REVISED -	
PLOT DATE = 9/20/2024	CHECKED - TJE	REVISED -	

STATE OF ILLINOIS
DEPARTMENT OF TRANSPORTATION

NORTH APPROACH SLAB PLAN (2 OF 2)
STRUCTURE NO. 016-1120 (SB)

SHEET 26 OF 48 SHEETS

F.A. RTE.	SECTION	COUNTY	TOTAL SHEETS	SHEET NO.
342	(531) BR 23	COOK	1211	784

CONTRACT NO. 62W38

ILLINOIS | FED. AID PROJECT

MODEL: Default
FILE NAME: S:\IDL\6300-63996346\113\Drawings\CAD\Micros-SSA\CAD_Sheets\0160375 1120-62W38-026-ASP2.dgn
9/20/2024 2:14:37 PM

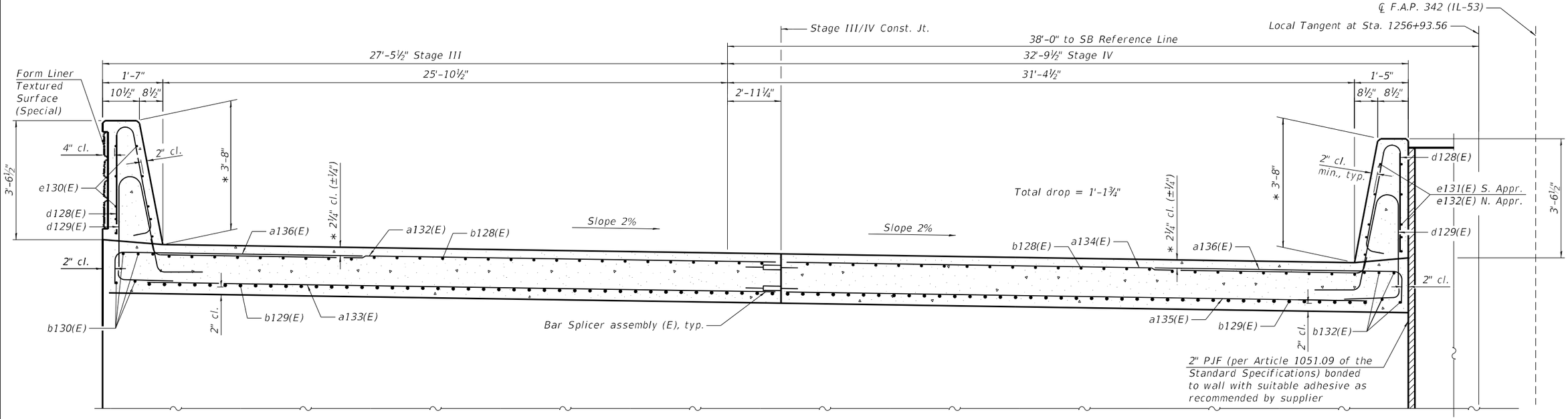

CROSS SECTION NEAR ABUTMENT

(Looking North)

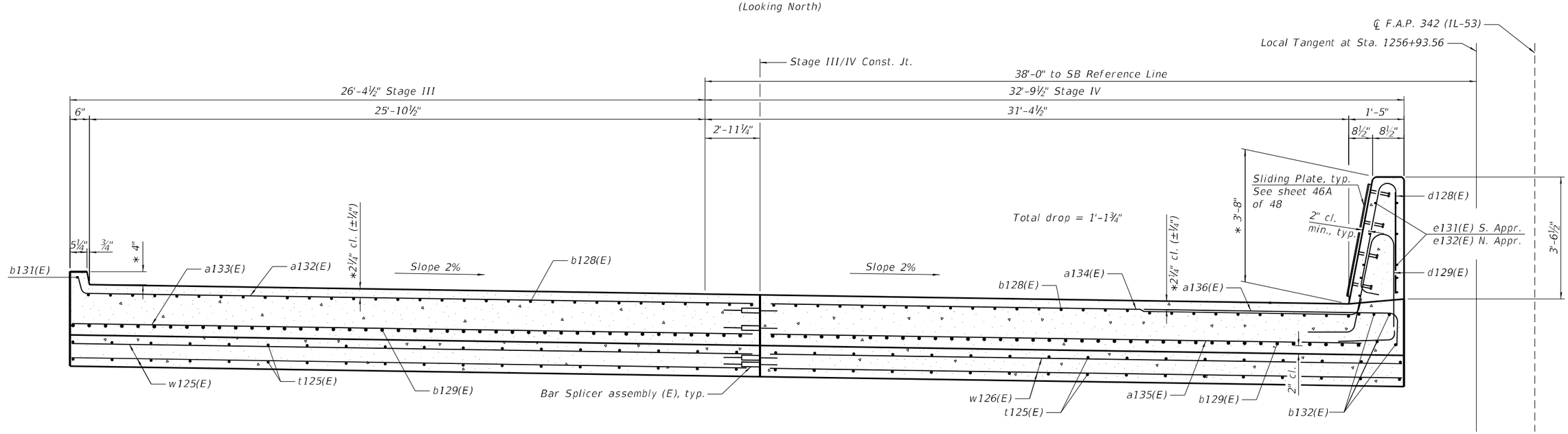

CROSS SECTION AT APPROACH FOOTING

(Looking North)

Notes:
1. See sheet 28 of 48 for details and bill of materials.

* after grinding

MODEL: Default
FILE NAME: S:\IDL\6300-6399\6346\113\Drawings\CAD\Micro-SS4\CAD_Sheets\0160375112O-62W38-027-ASCS.dgn
9/20/2024 2:14:39 PM

STRAND ASSOCIATES
1170 SOUTH HOUBOLT ROAD
JOLIET, ILLINOIS 60431
(815) 744-4200
IDFPR NO. 184-001273

USER NAME = codyh	DESIGNED - TJE	REVISED -	
	CHECKED - KRB	REVISED -	
PLOT SCALE = 0:2.0000 ':" / in.	DRAWN - CJH	REVISED -	
PLOT DATE = 9/20/2024	CHECKED - TJE	REVISED -	

STATE OF ILLINOIS
DEPARTMENT OF TRANSPORTATION

APPROACH SLAB CROSS SECTION
STRUCTURE NO. 016-1120 (SB)

SHEET 27 OF 48 SHEETS

F.A. RTE.	SECTION	COUNTY	TOTAL SHEETS	SHEET NO.
342	(531) BR 23	COOK	1211	785
		CONTRACT NO. 62W38		
	ILLINOIS	FED. AID PROJECT		

Notes:
1. The joint opening shall be adjusted for temperature per Article 520.04 of the Standard Specifications. However, since this detail is for jointless structures, the length of bridge used to calculate the adjustment shall be equal to half the total bridge length plus the length of the bridge approach slab.
2. Parapet concrete shall be paid for as Concrete Superstructure.
3. Approach slab shall be paid for as Concrete Superstructure (Approach Slab).
4. Approach footing concrete shall be paid for as Concrete Structures.
5. The approach footing maximum applied service bearing pressure (Qmax) = 2.0 ksf.
6. Cost of excavation for approach footing included with Concrete Structures.
7. For Granular Backfill for Structures and drainage treatment details, see sheet 21 of 48.

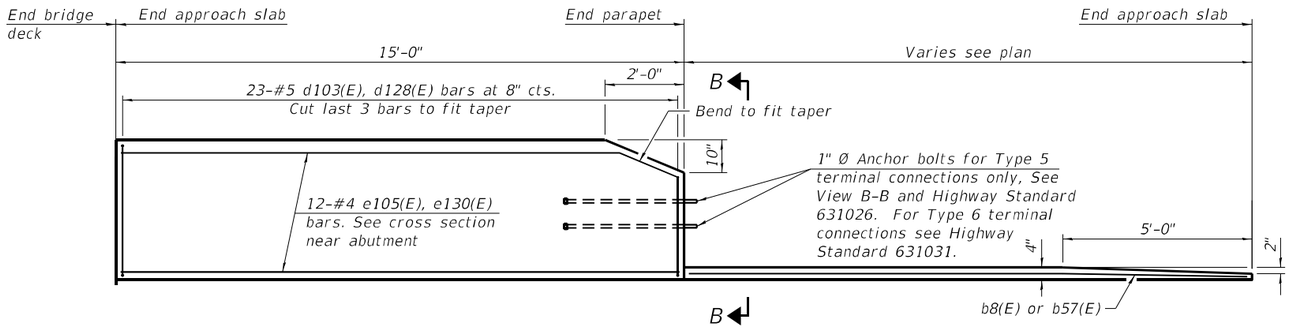

SN016-0375 EAST & SN016-1120 WEST INSIDE ELEVATION OF PARAPET AND CURB

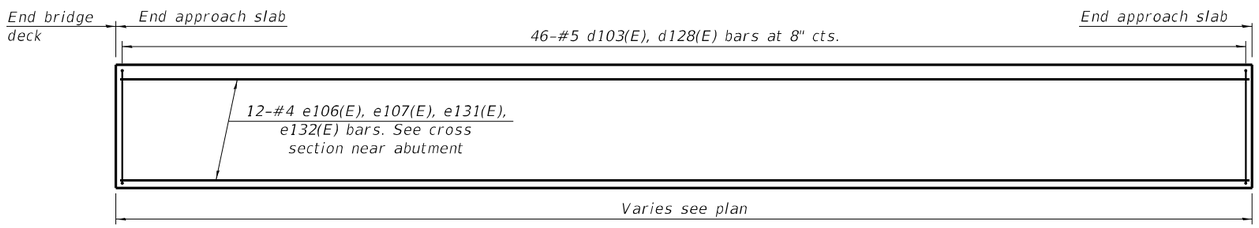

SN016-0375 WEST & SN016-1120 EAST INSIDE ELEVATION OF PARAPET

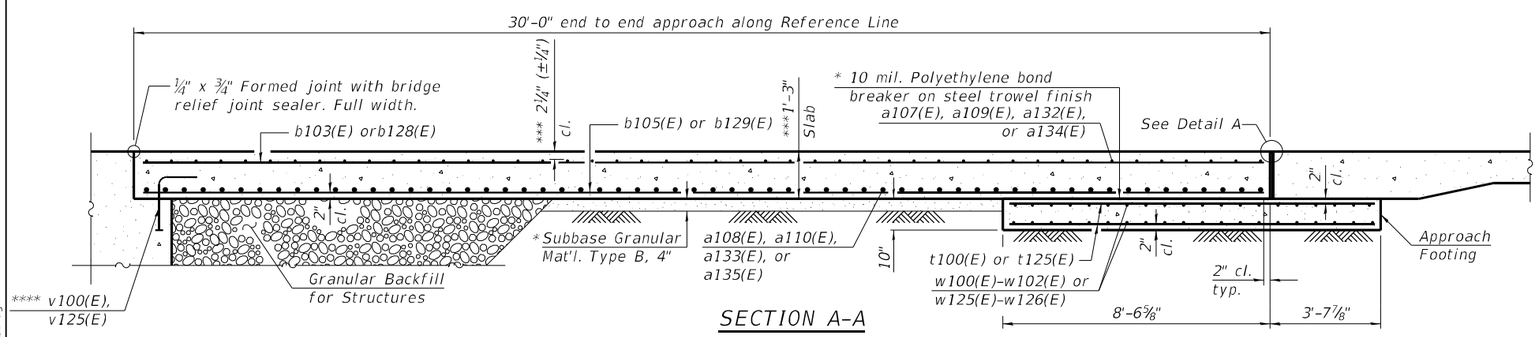

SECTION A-A

**** See sheet 18 of 46 for bar location and Bill of Materials

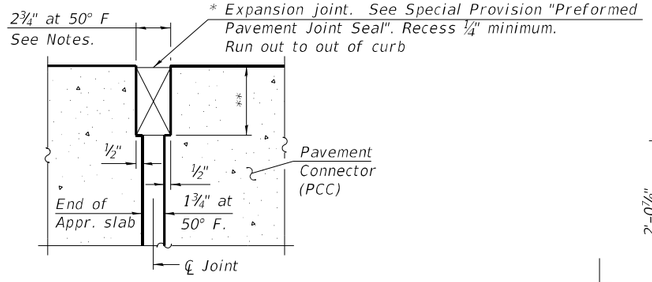

DETAIL A
(at Rt. ∠'s)

* Cost included with Concrete Superstructure (Approach Slab).

** Per manufacturer recommendations

*** After grinding

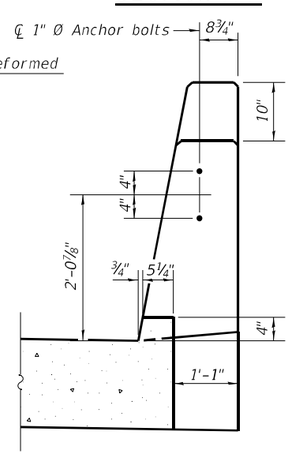

VIEW B-B

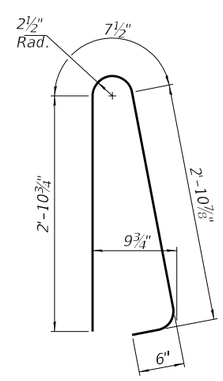

BAR d103E), d128(E)

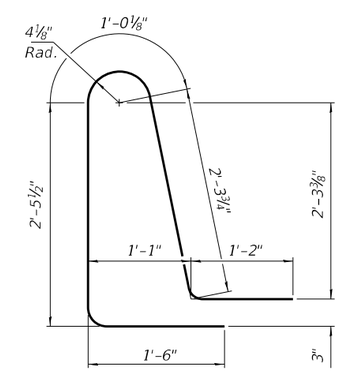

BAR d104(E), d129(E)

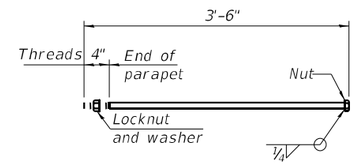

*1" Ø ANCHOR BOLT
(Anchor bolt assemblies shall be galvanized according to Article 1006.09 of the Standard Specifications)

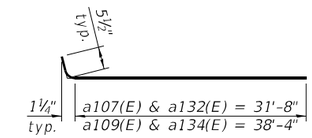

BAR a107(E), a109(E), a132(E), a134(E)

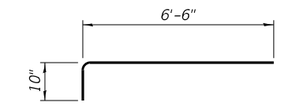

BAR a111(E), a136(E)

TWO APPROACHES BILL OF MATERIALS

Structure No. 016-0375 (NB)

Bar	No.	Size	Length	Shape
a107(E)	92	#5	32'-1"	
a108(E)	120	#8	31'-8"	
a109(E)	92	#5	38'-9"	
a110(E)	122	#8	38'-4"	
a111(E)	138	#5	7'-4"	
b103(E)	176	#5	29'-8"	
b104(E)	279	#9	29'-8"	
b105(E)	8	#5	14'-8"	
b106(E)	1	#4	14'-5"	
b107(E)	4	#5	29'-8"	
b108(E)	1	#4	15'-3"	
b109(E)	4	#5	28'-8"	
d103(E)	138	#5	7'-0"	
d104(E)	138	#5	8'-6"	
e105(E)	24	#4	14'-8"	
e106(E)	12	#4	29'-8"	
e107(E)	12	#4	28'-8"	
t100(E)	126	#4	11'-10"	
w100(E)	40	#5	31'-10"	
w101(E)	80	#5	39'-8"	
w102(E)	40	#5	32'-8"	
Concrete Structures			CU YD	44.6
Protective Coat			SQ YD	417
Concrete Superstructure (Approach Slab)			CU YD	165.8
Reinforcement Bars, Epoxy Coated			POUND	74,360
Bridge Deck Grooving (Longitudinal)			SQ YD	363
Form Liner Textured Surface (Special)			SQ FT	105
Diamond Grinding (Bridge Section)			SQ YD	357
Colored Concrete Additive			CU YD	4.9
Bar Splicers			EACH	292
Concrete Sealant (Special)			SQ YD	9

Structure No. 016-1120 (SB)

Bar	No.	Size	Length	Shape
a132(E)	92	#5	32'-1"	
a133(E)	120	#8	31'-8"	
a134(E)	92	#5	38'-9"	
a135(E)	122	#8	38'-4"	
a136(E)	138	#5	7'-4"	
b128(E)	176	#5	29'-8"	
b129(E)	278	#9	29'-8"	
b130(E)	8	#5	14'-8"	
b131(E)	2	#4	14'-5"	
b132(E)	8	#5	29'-8"	
d128(E)	138	#5	7'-0"	
d129(E)	138	#5	8'-6"	
e130(E)	24	#4	14'-8"	
e131(E)	12	#4	28'-8"	
e132(E)	12	#4	29'-8"	
t125(E)	126	#4	11'-10"	
w125(E)	80	#5	31'-10"	
w126(E)	80	#5	39'-8"	
Concrete Structures			CU YD	44.6
Protective Coat			SQ YD	417
Concrete Superstructure (Approach Slab)			CY YD	165.8
Reinforcement Bars, Epoxy Coated			POUND	74,230
Bridge Deck Grooving (Longitudinal)			SQ YD	363
Form Liner Textured Surface (Special)			SQ FT	105
Diamond Grinding (Bridge Section)			SQ YD	357
Colored Concrete Additive			CU YD	4.9
Bar Splicers			EACH	292
Concrete Sealant (Special)			SQ YD	9

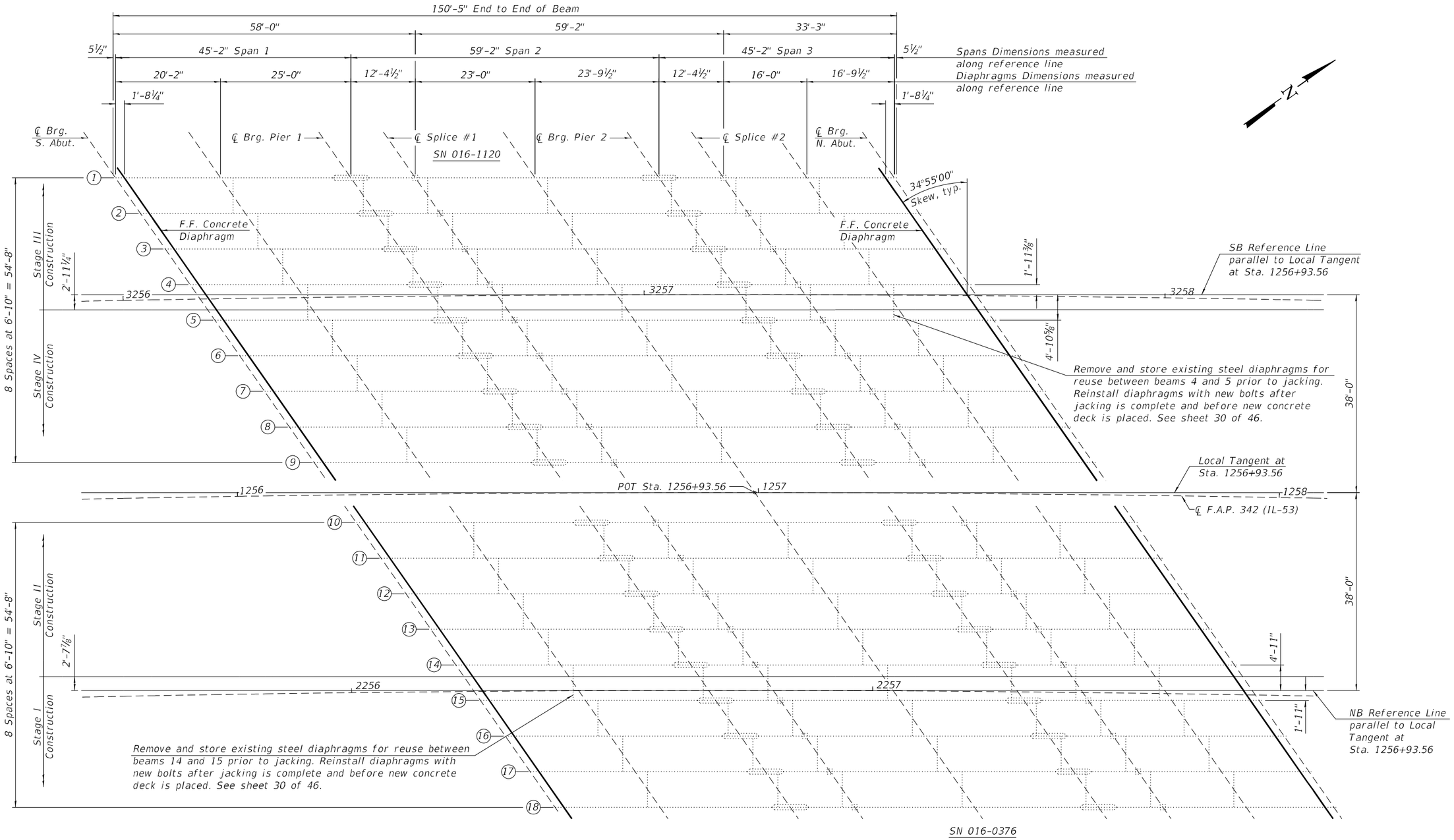

FRAMING PLAN

Notes:

1. Provide new headed studs to all existing beams. See sheet 30 of 48 for details.
2. Remove and replace all existing bearings. See details on sheet 30 of 48.

MODEL: Default
FILE NAME: S:\IOL\6300-63996346\113\Drawings\CAD\Micros-SSA\CAD_Sheets\0160375112O-62W38-029-FP.dgn
9/20/2024 2:14:41 PM

STRAND ASSOCIATES®
1170 SOUTH HOUBOLT ROAD
JOLIET, ILLINOIS 60431
(815) 744-4200
IDFPR NO. 184-001273

USER NAME = codyh	DESIGNED - TJE	REVISED -	
	CHECKED - NDR	REVISED -	
PLOT SCALE = 0:2.0000 ':" / in.	DRAWN - CJH	REVISED -	
PLOT DATE = 9/20/2024	CHECKED - TJE	REVISED -	

STATE OF ILLINOIS
DEPARTMENT OF TRANSPORTATION

FRAMING PLAN
STRUCTURE NO. 016-0375 (NB) AND 016-1120 (SB)

SHEET 29 OF 48 SHEETS

F.A. RTE.	SECTION	COUNTY	TOTAL SHEETS	SHEET NO.
342	(531) BR 23	COOK	1211	787
		CONTRACT NO. 62W38		
	ILLINOIS	FED. AID PROJECT		

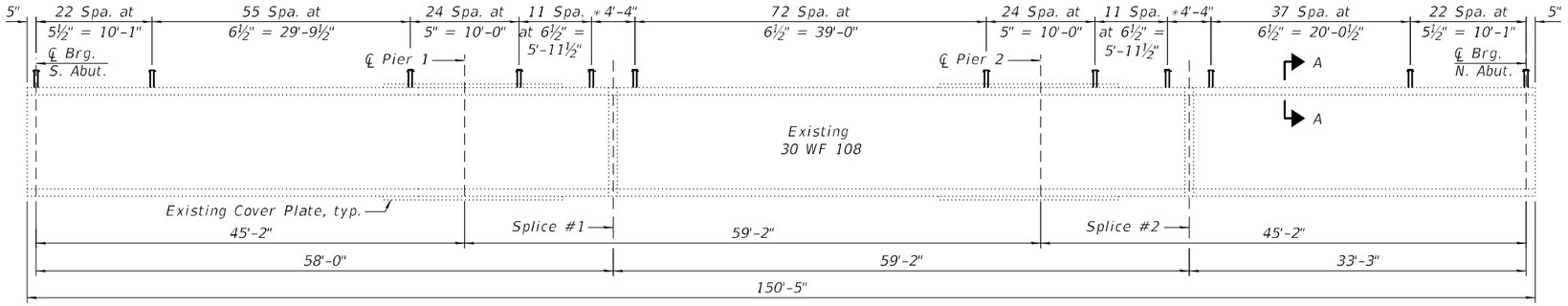

* no studs

BEAM ELEVATION

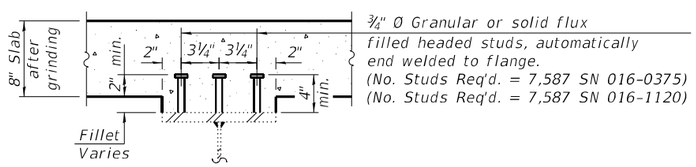

SECTION A-A

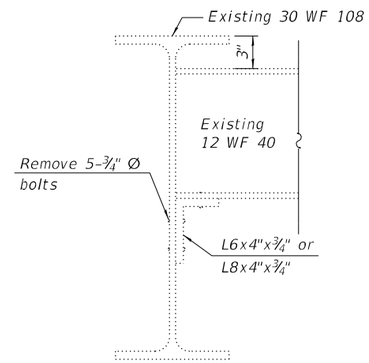

ABUTMENT DIAPHRAGM DISCONNECTION DETAIL

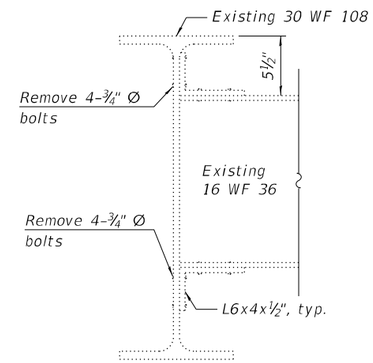

TYPICAL DIAPHRAGM DISCONNECTION DETAIL

**JACKING LOAD

		Abutment	Pier
R_{DL}	(k)	6.2	22.4
Min. Jack Capacity	(k)	12.0	44.0

** Service reactions provided are for a single girder with the deck removed. The Contractor shall design and place Jacking & Cribbing system for the stated beam reaction and as required in the Special Provisions.

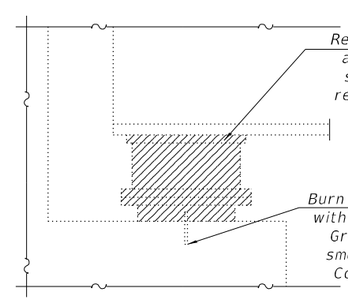

EXISTING BEARING REMOVAL AT ABUTMENTS

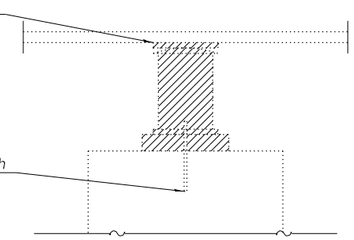

EXISTING BEARING REMOVAL AT PIERS

Notes:

1. Jacking of existing girders and replacement of bearings shall be done after the existing deck has been removed and prior to placing the new deck.
2. The Contractor shall submit, for approval by the Engineer, plans for jacking existing beams and removing the existing bearings prior to commencing any related work. See Special Provisions.
3. Disconnect diaphragms between beams 14 and 15 NB and diaphragms between beams 4 and 5 SB.
4. Diaphragms to be reconnected before pouring concrete semi-integral diaphragm.
5. After jacking and installation of bearing extensions is complete, replace all bolts removed with new ¾" Ø High Strength Bolts. Cost of bolts included with Jack and Remove.
6. For information not shown, see note 4 on sheet 2 of 48.

DEFINITIONS

- Is, Ss: Non-composite moment of inertia and section modulus of the steel section used for computing fs(Total and Overload) due to non-composite dead loads (in.⁴ and in.³).
- Ic(n), Sc(n): Composite moment of inertia and section modulus of the steel and deck based upon the modular ratio, "n", used for computing fs(Total and Overload) due to short-term composite live loads (in.⁴ and in.³).
- Ic(3n), Sc(3n): Composite moment of inertia and section modulus of the steel and deck based upon 3 times the modular ratio, "3n", used for computing fs(Total and Overload) due to long-term composite (superimposed) dead loads (in.⁴ and in.³).
- Z: Plastic Section Modulus of the steel section in non-composite areas (in.³).
- $\wp$: Un-factored non-composite dead load (kips/ft.).
- $M\wp$: Un-factored moment due to non-composite dead load (kip-ft.).
- $s\wp$: Un-factored long-term composite (superimposed) dead load (kips/ft.)
- $M_s\wp$: Un-factored moment due to long-term composite (superimposed) dead load (kip-ft.).
- $M\ell$: Un-factored live load moment (kip-ft.).
- MI: Un-factored moment due to impact (kip-ft.).
- Ma: Factored design moment (kip-ft.). $1.3\ [M\wp + Ms\wp + \frac{5}{3}(M\ell + MI)]$
- Mu: Compact composite moment capacity according to AASHTO LFD 10.50.1.1 or compact non-composite moment capacity according to AASHTO LFD 10.48.1 (kip-ft.).
- fs (Overload): Sum of stresses as computed from the moments below (ksi). $M\wp + Ms\wp + \frac{5}{3}(M\ell + MI)$
- fs (Total): Sum of stresses as computed from the moments below on non-compact section (ksi). $1.3\ [M\wp + Ms\wp + \frac{5}{3}(M\ell + MI)]$
- VR: Maximum ℓ + impact shear range within the composite portion of the span for stud shear connector design (kips).

*** Compact Section
**** Braced non-Compact and Partially Braced Section

Interior Girder Moment Table				
		0.4 Sp. 1 0.6 SP. 3	PIER 1 PIER 2	0.5 SP. 2
I_s	(in^4)	4,470	5,816	4,470
$I_c(n)$	(in^4)	13,961	16,469	13,961
$I_c(3n)$	(in^4)	10,428	12,232	10,428
$I_c(cr)$	(in^4)	———	8,141	———
S_s	(in^3)	299	382	299
$S_c(n)$	(in^3)	477	———	477
$S_c(3n)$	(in^3)	432		432
$S_c(cr)$	(in^3)	———	668	———
Z	(in^3)	———	———	———
DL	(k/')	0.91	0.93	0.91
M_{DL}	('k)	112	253	128
S_{DL}	(k/')	0.30	0.30	0.30
MS_{DL}	('k)	39	87	45
M_{LL}	('k)	276	216	305
M_I	('k)	81	61	83
$^5/_3\ [M_{LL} + {}_I]$	('k)	595	461	647
Ma	('k)	969	1,042	1,064
*** Mu	('k)	1,456	———	1,801
$f_{s\ DL}$ (non-comp)	(ksi)	4.5	8.0	5.1
$f_{s\ DL}$ (comp)	(ksi)	1.1	1.6	1.2
$f_s\ ^5/_3(M_{LL} + M_I)$	(ksi)	15.0	8.3	16.3
f_s (Overload)	(ksi)	20.5	17.8	22.6
**** f_s (Total)	(ksi)	———	23.1	———
VR	(k)	34.6	54.1	39.9

INTERIOR GIRDER REACTION TABLE			
		Abutment	Pier
R_{DL}	(k)	46.9	68.9
R_{LL}	(k)	38.6	46.8
R_I	(k)	11.4	10.2
R_{Total}	(k)	144.5	184.8

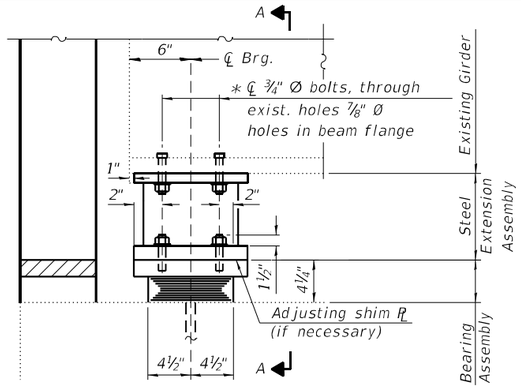

ELEVATION

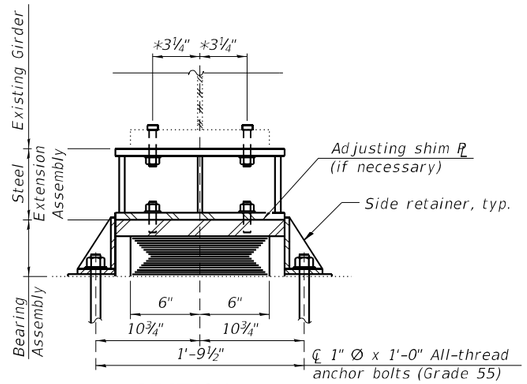

SECTION A-A

TYPE I ELASTOMERIC EXP. BRG. AT ABUTMENTS

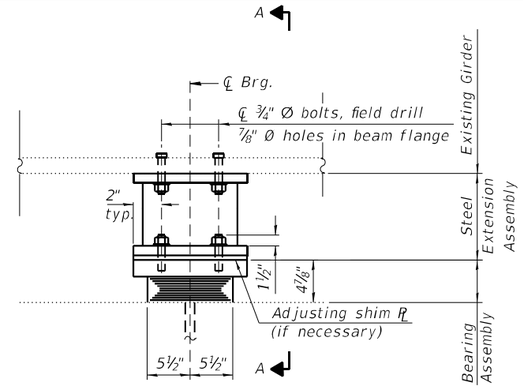

ELEVATION

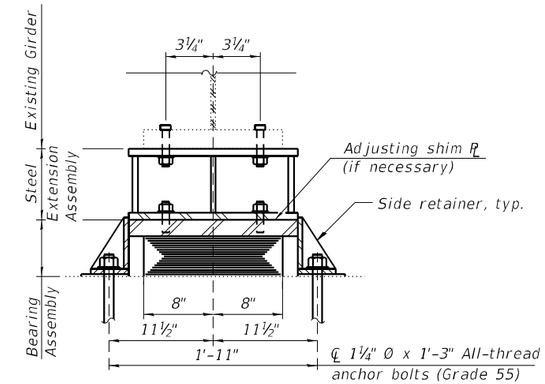

SECTION A-A

TYPE I ELASTOMERIC EXP. BRG. AT PIER 2

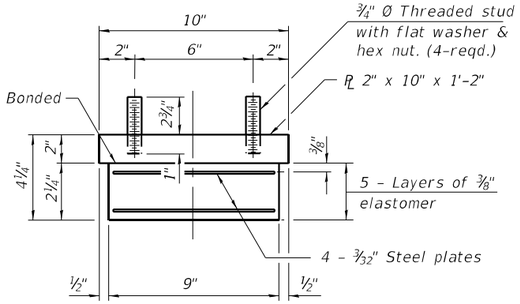

BEARING ASSEMBLY
(South and North Abutment)

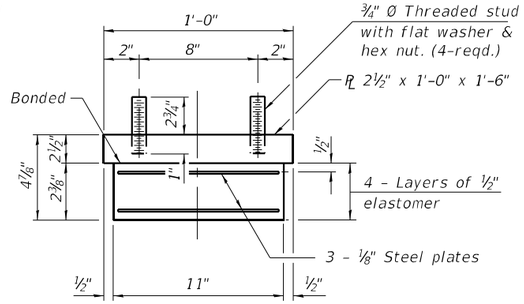

BEARING ASSEMBLY
(Pier 2)

Note:
Shim plates shall not be placed under bearing assembly.

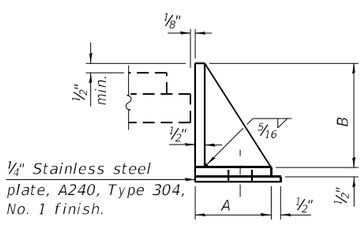

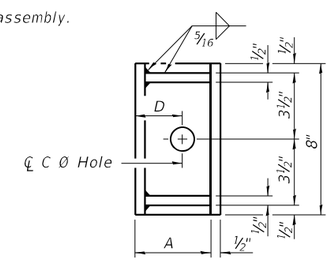

SIDE RETAINER

Equivalent rolled angle with stiffeners
will be allowed in lieu of welded plates.

	A	B	C	D
N. Abut/S.Abut	7"	5"	1"	3 5/8"
Pier 2	6 1/4"	5 1/2"	1 1/4"	2 3/8"

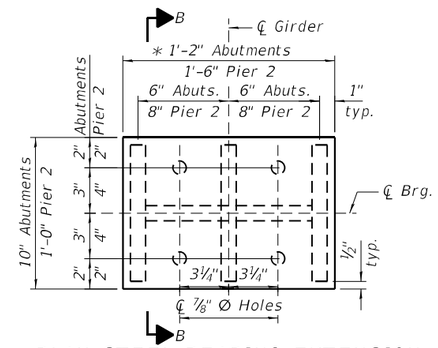

PLAN STEEL BEARING EXTENSION

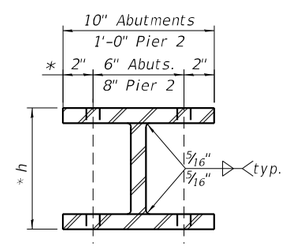

SECTION B-B

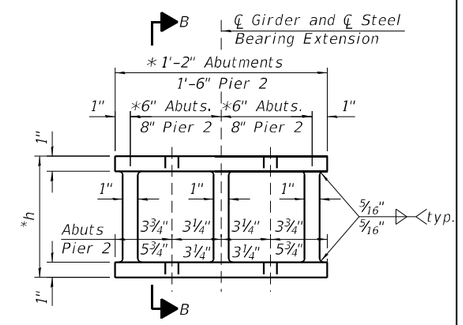

ELEVATION STEEL BEARING EXTENSION

STEEL EXTENSION ASSEMBLY HEIGHT, *h

S.N. 016-0375				S.N. 016-1120			
Beams	S. Abut.	Pier 2	N. Abut.	Beams	S. Abut.	Pier 2	N. Abut.
BEAM 10	10 5/16	9 3/8	10 9/16	BEAM 1	10 1/16	9 3/4	10 1/4
BEAM 11	10 3/8	9 3/4	10 9/16	BEAM 2	10	9 9/16	10 3/8
BEAM 12	10 1/4	9 5/8	9 15/16	BEAM 3	9 13/16	9 5/16	10
BEAM 13	10 5/16	9 11/16	10 3/16	BEAM 4	9 7/8	9 1/2	10 1/8
BEAM 14	10 1/4	9 7/8	10 1/2	BEAM 5	10 1/4	9 13/16	10 1/16
BEAM 15	10 1/2	9 15/16	10 9/16	BEAM 6	10 1/2	9 5/8	10 1/8
BEAM 16	10 1/4	9 3/4	10 3/8	BEAM 7	10 3/8	9 1/2	10 5/16
BEAM 17	10 3/16	9 9/16	10 1/8	BEAM 8	10 7/16	9 15/16	10 7/16
BEAM 18	10 1/8	9 5/8	10 1/16	BEAM 9	10 1/16	9 15/16	10 3/8

Note: Steel extension assembly heights are in inches.

BILL OF MATERIAL

Item	Unit	Total
Furnishing and Erecting Structural Steel	POUND	9,950
Elastomeric Bearing Assembly, Type I	EACH	54
Anchor Bolts, 1"	EACH	72
Anchor Bolts, 1 1/4"	EACH	36
Jack and Remove Existing Bearings	EACH	54
Cleaning Bridge Seats	SQ FT	644

Notes:
1. Side retainers and stainless steel plates shall be included in the cost of Elastomeric Bearing Assembly, Type I.
2. Anchor bolts and side retainers at all supports shall be installed as each member is erected unless an equivalent temporary means of lateral restraint is used.
3. Two ⅛" adjusting shims shall be provided for each bearing in addition to all other plates or shims and placed as shown on bearing details.
4. All bearing plates, side retainers, anchor bolts, nuts, washers, and pintles shall be galvanized according to AASHTO M111 or M232 as applicable.
* 5. Prior to ordering any material, the Contractor shall field verify all steel bearing extension heights and existing drilled hole sizes at bearing locations.
6. The cost of steel extensions and all connection bolts are included with the cost of Furnishing and Erecting Structural Steel.

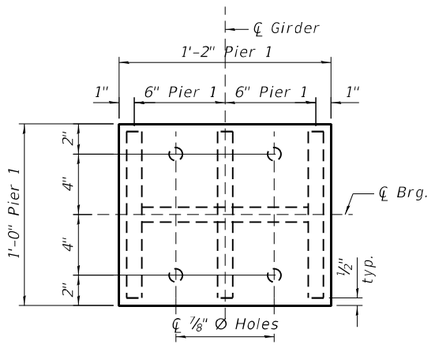

PLAN STEEL BEARING EXTENSION

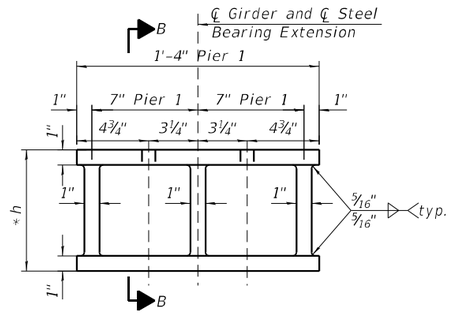

ELEVATION STEEL BEARING EXTENSION

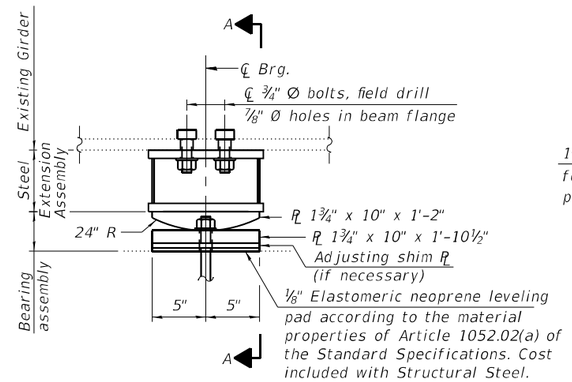

ELEVATION

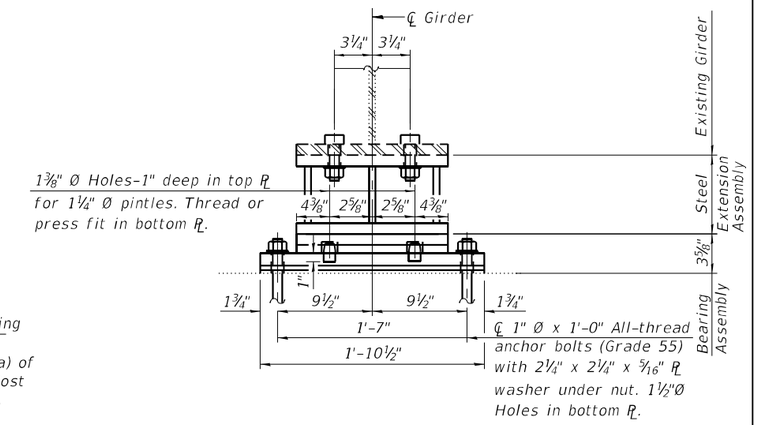

SECTION A-A

FIXED BEARING AT PIER 1

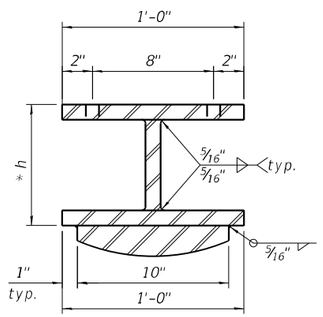

SECTION B-B

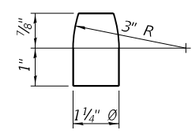

PINTLE

S.N. 016-0375

Girder No.	Bottom of Flange Elevations			
	CL Brg. S. Abut	CL Brg. Pier 1	CL Brg. Pier 2	CL Brg. N. Abut.
10	742.29	741.98	741.67	741.44
11	742.13	741.84	741.55	741.30
12	741.98	741.68	741.40	741.13
13	741.81	741.55	741.25	741.00
14	741.63	741.38	741.11	740.86
15	741.50	741.24	740.96	740.71
16	741.30	741.05	740.78	740.53
17	741.15	740.88	740.60	740.36
18	740.99	740.71	740.43	740.18

S.N. 016-1120

Girder No.	Bottom of Flange Elevations			
	CL Brg. S. Abut	CL Brg. Pier 1	CL Brg. Pier 2	CL Brg. N. Abut.
1	742.15	741.92	741.73	741.59
2	742.02	741.79	741.58	741.44
3	741.85	741.61	741.41	741.25
4	741.72	741.47	741.28	741.11
5	741.57	741.29	741.11	740.95
6	741.44	741.15	740.94	740.80
7	741.26	740.99	740.77	740.63
8	741.11	740.83	740.61	740.45
9	740.91	740.64	740.45	740.29

Bottom Flange Elevations are based on field survey. Contractor shall verify in the field

Notes:

1. Side retainers and stainless steel plates shall be included in the cost of Elastomeric Bearing Assembly, Type I.
2. Anchor bolts and side retainers at all supports shall be installed as each member is erected unless an equivalent temporary means of lateral restraint is used.
3. Two ⅛" adjusting shims shall be provided for each bearing in addition to all other plates or shims and placed as shown on bearing details.
4. All bearing plates, side retainers, anchor bolts, nuts, washers, and pintles shall be galvanized according to AASHTO M111 or M232 as applicable.
* 5. Prior to ordering any material, the Contractor shall field verify all steel bearing extension heights and existing drilled hole sizes at bearing locations.
6. The cost of steel extensions and connection bolts are included with the cost of Furnishing and Erecting Structural Steel.

STEEL EXTENSION ASSEMBLY TABLE, *h

S.N. 016-0375		S.N. 016-1120	
Beams	Pier 1	Beams	Pier 1
BEAM 10	9 7/16	BEAM 1	10
BEAM 11	9 3/4	BEAM 2	9 7/8
BEAM 12	9 5/16	BEAM 3	9 9/16
BEAM 13	9 5/8	BEAM 4	9 1/2
BEAM 14	9 9/16	BEAM 5	9 5/8
BEAM 15	9 9/16	BEAM 6	9 11/16
BEAM 16	9 7/16	BEAM 7	9 5/8
BEAM 17	9 3/8	BEAM 8	9 1/2
BEAM 18	9 2/8	BEAM 9	9 1/2

Note: Steel extension assembly heights are in inches.

BILL OF MATERIAL

Item	Unit	Total
Furnishing and Erecting Structural Steel	POUND	7,000
Anchor Bolts, 1"	EACH	36
Jack and Remove Existing Bearings	EACH	18
Cleaning Bridge Seats	SQ FT	190

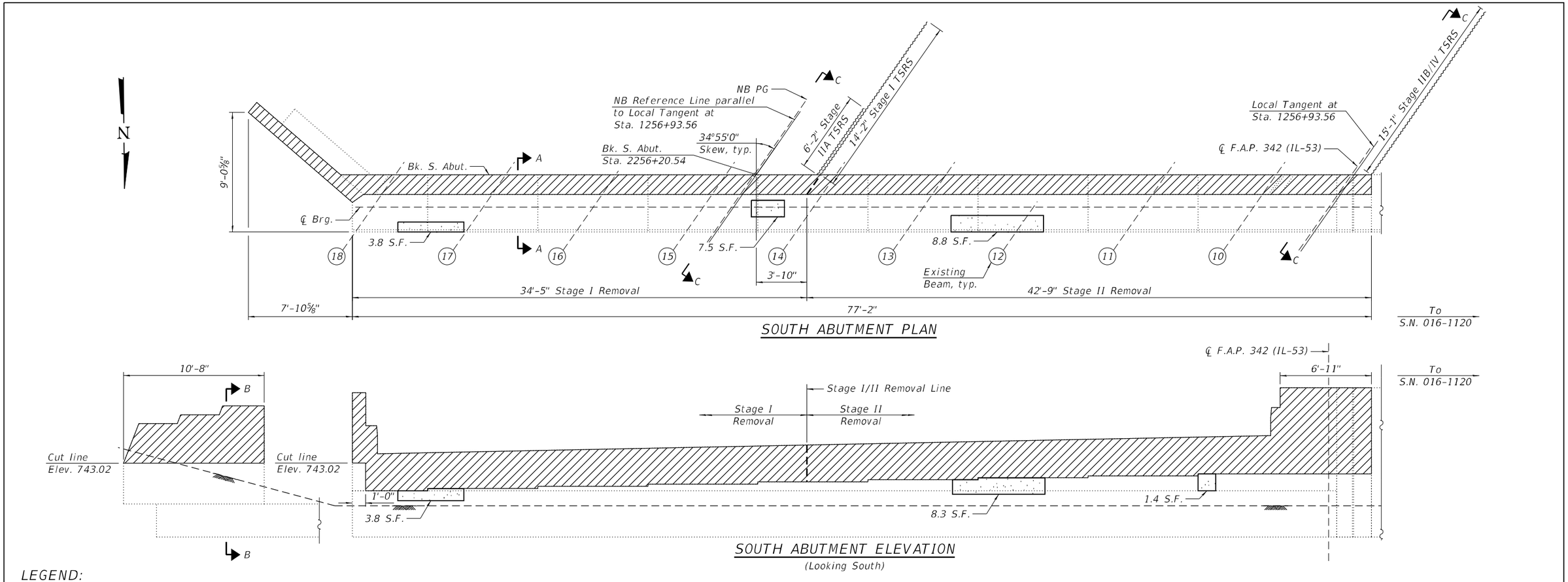

LEGEND:

- Concrete Removal
- Structural Repair of Concrete (Depth equal to or less than 5 inches)
- Temporary Soil Retention System

BILL OF MATERIALS

Item	Unit	Total
Concrete Removal	CU YD	18.8
Temporary Soil Retention System	SQ FT	200
Structural Repair of Concrete (Depth Equal to or Less Than 5	SQ FT	34

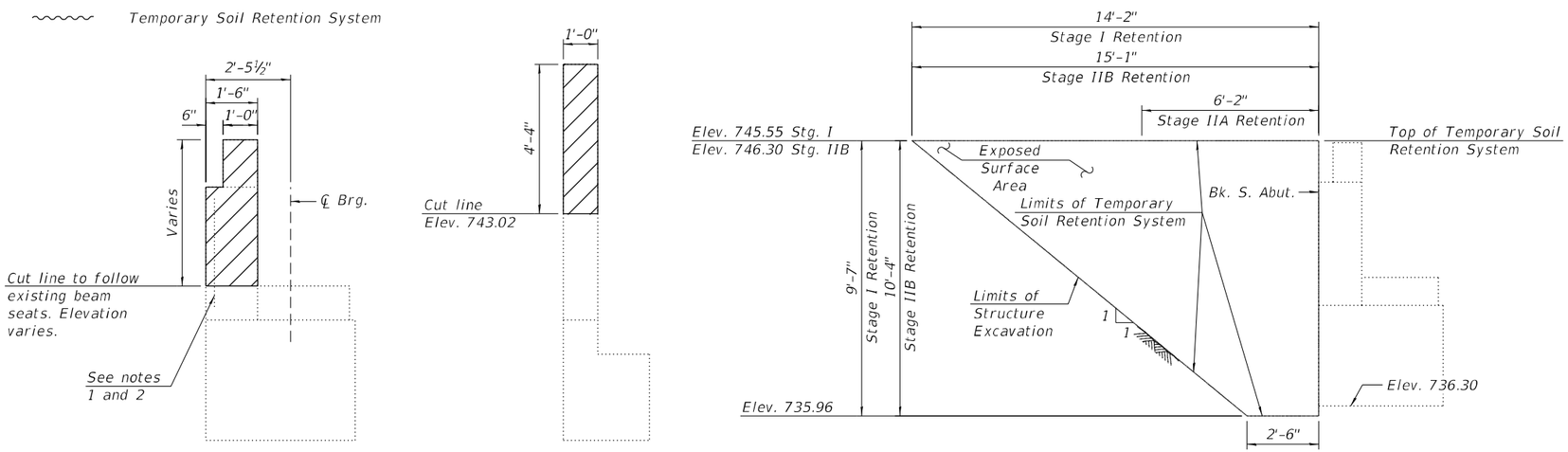

Notes:

1. Existing vertical reinforcement in back wall shall be cleaned and incorporated into new construction. Cost included in the cost of "Concrete Removal".
2. Any vertical reinforcement bars that are damaged during concrete removal operations shall be repaired or replaced using an approved bar splicer or anchorage system. Cost included in the cost of "Concrete Removal".
3. The elevations and dimensions shown are calculated based off existing plans and field measurements. The Contractor shall verify in field and make necessary approved adjustments prior to removals, repairs, or ordering of materials. For additional information, see select Existing Drawings.
4. A cantilevered sheet piling design does not appear feasible and additional members or other retention systems may be necessary. The Contractor shall submit a Temporary Soil Retention System design including plan details and calculations for review and acceptance by the Engineer.
5. Specified Temporary Soil Retention System will be used for 2 separate construction stages due to necessary modifications required between stages.
6. For Offset sketch, see sheet 2 of 48.

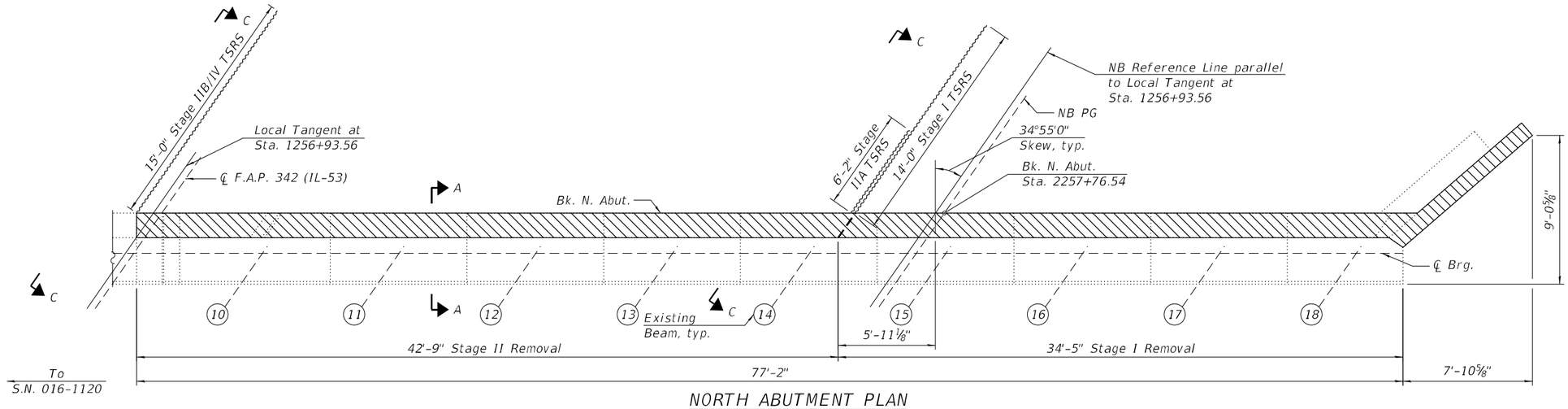

NORTH ABUTMENT PLAN

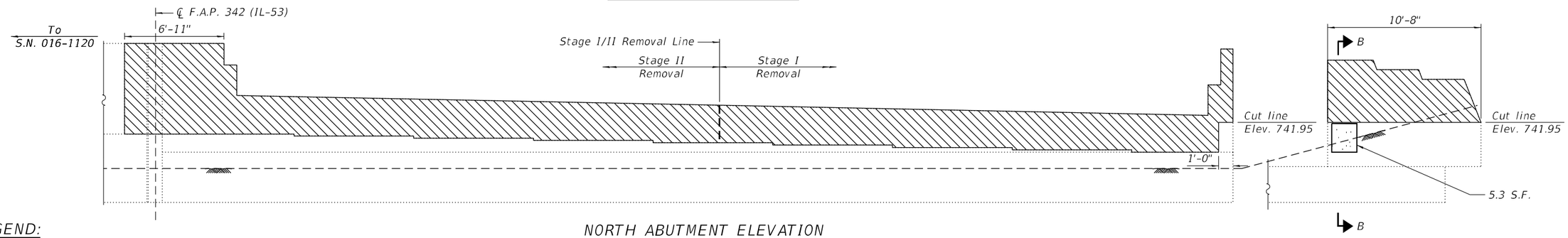

NORTH ABUTMENT ELEVATION

(Looking North)

LEGEND:

- Concrete Removal
- Structural Repair of Concrete (Depth equal to or less than 5 inches)
- Temporary Soil Retention System

BILL OF MATERIALS

Item	Unit	Total
Concrete Removal	CU YD	18.1
Temporary Soil Retention System	SQ FT	217
Structural Repair of Concrete (Depth Equal to or Less Than 5	SQ FT	6

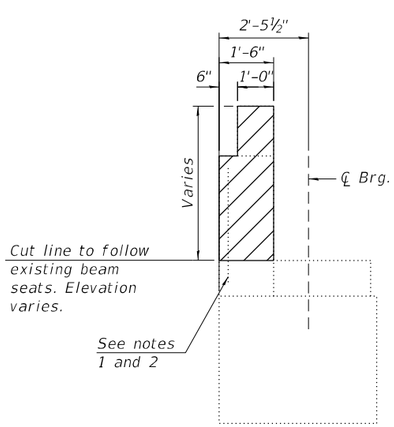

SECTION A-A

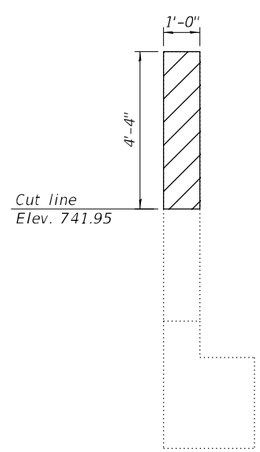

SECTION B-B

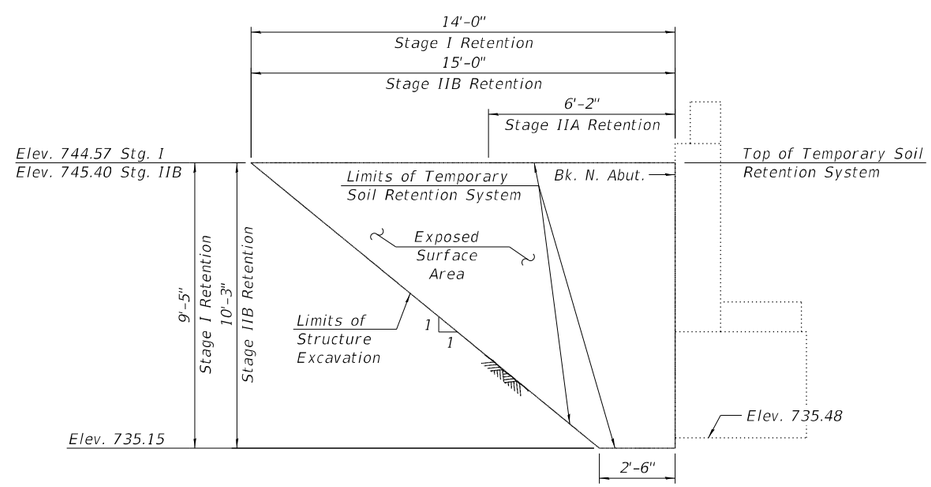

SECTION C-C TEMPORARY SOIL RETENTION SYSTEM

Notes:

1. Existing vertical reinforcement in back wall shall be cleaned and incorporated into new construction. Cost included in the cost of "Concrete Removal".
2. Any vertical reinforcement bars that are damaged during concrete removal operations shall be repaired or replaced using an approved bar splicer or anchorage system. Cost included in the cost of "Concrete Removal".
3. The elevations and dimensions shown are calculated based off existing plans and field measurements. The Contractor shall verify in field and make necessary approved adjustments prior to removals, repairs, or ordering of materials. For additional information, see select Existing Drawings.
4. A cantilevered sheet piling design does not appear feasible and additional members or other retention systems may be necessary. The Contractor shall submit a Temporary Soil Retention System design including plan details and calculations for review and acceptance by the Engineer.
5. Specified Temporary Soil Retention System will be used for 2 separate construction stages due to necessary modifications required between stages.
6. For Offset sketch, see sheet 2 of 48.

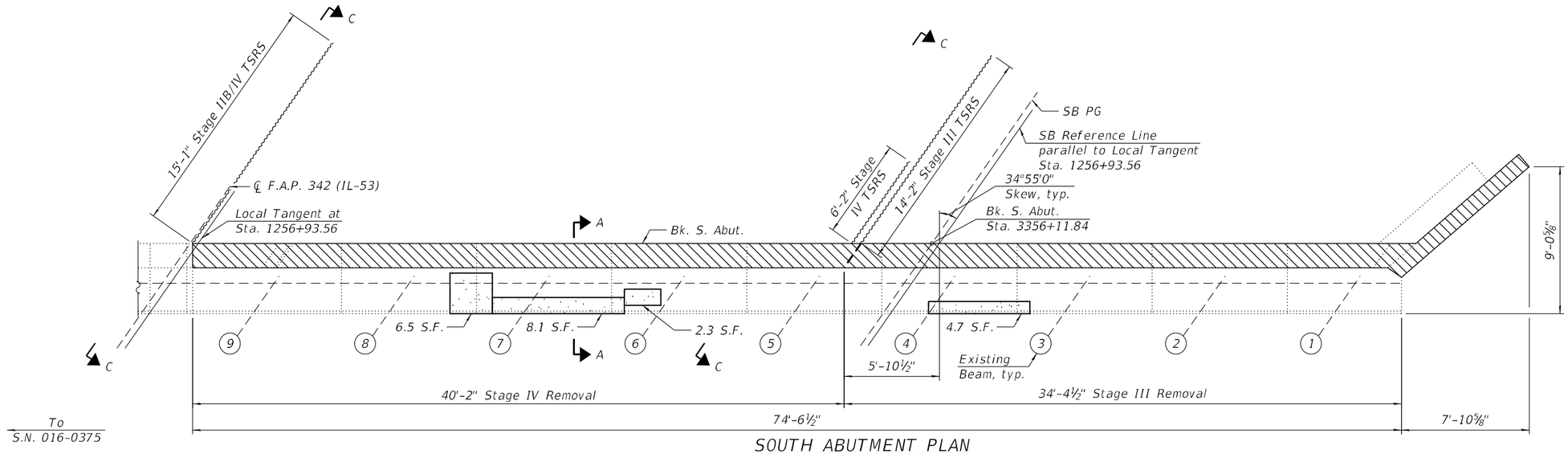

SOUTH ABUTMENT PLAN

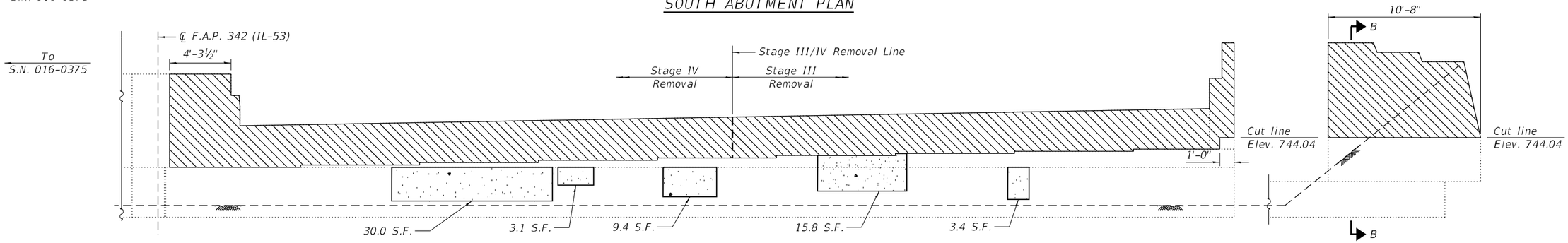

SOUTH ABUTMENT ELEVATION

(Looking South)

LEGEND:

- Concrete Removal
- Structural Repair of Concrete (Depth equal to or less than 5 inches)
- Temporary Soil Retention System

BILL OF MATERIALS

Item	Unit	Total
Concrete Removal	CU YD	25.4
Temporary Soil Retention System	SQ FT	111
Structural Repair of Concrete (Depth Equal to or Less Than 5	SQ FT	84

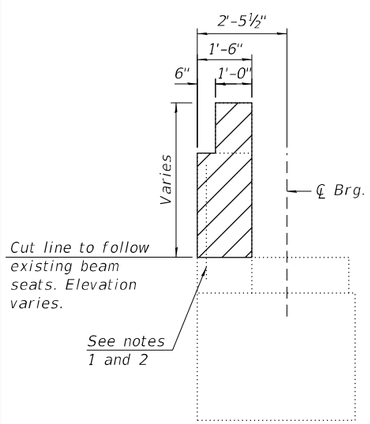

SECTION A-A

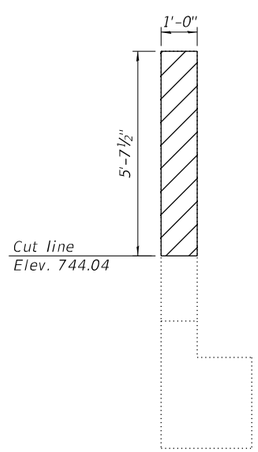

SECTION B-B

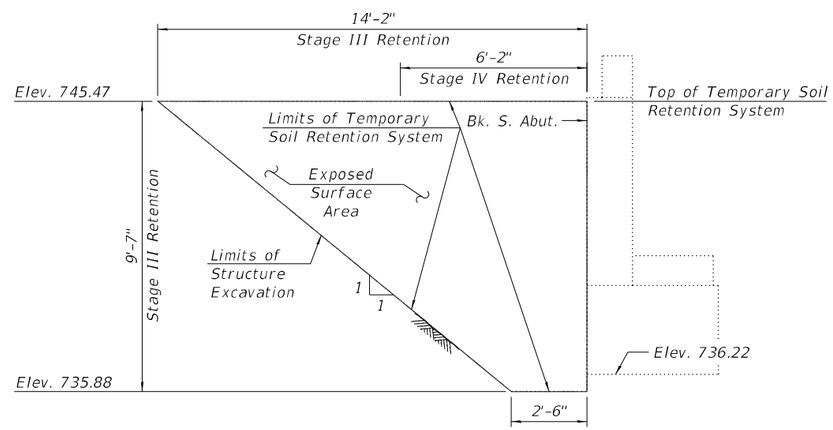

SECTION C-C TEMPORARY SOIL RETENTION SYSTEM

Notes:

1. Existing vertical reinforcement in back wall shall be cleaned and incorporated into new construction. Cost included in the cost of "Concrete Removal".
2. Any vertical reinforcement bars that are damaged during concrete removal operations shall be repaired or replaced using an approved bar splicer or anchorage system. Cost included in the cost of "Concrete Removal".
3. The elevations and dimensions shown are calculated based off existing plans and field measurements. The Contractor shall verify in field and make necessary approved adjustments prior to removals, repairs, or ordering of materials. For additional information, see select Existing Drawings.
4. A cantilevered sheet piling design does not appear feasible and additional members or other retention systems may be necessary. The Contractor shall submit a Temporary Soil Retention System design including plan details and calculations for review and acceptance by the Engineer.
5. Specified Temporary Soil Retention System will be used for 2 separate construction stages due to necessary modifications required between stages.
6. For Offset sketch, see sheet 2 of 48.

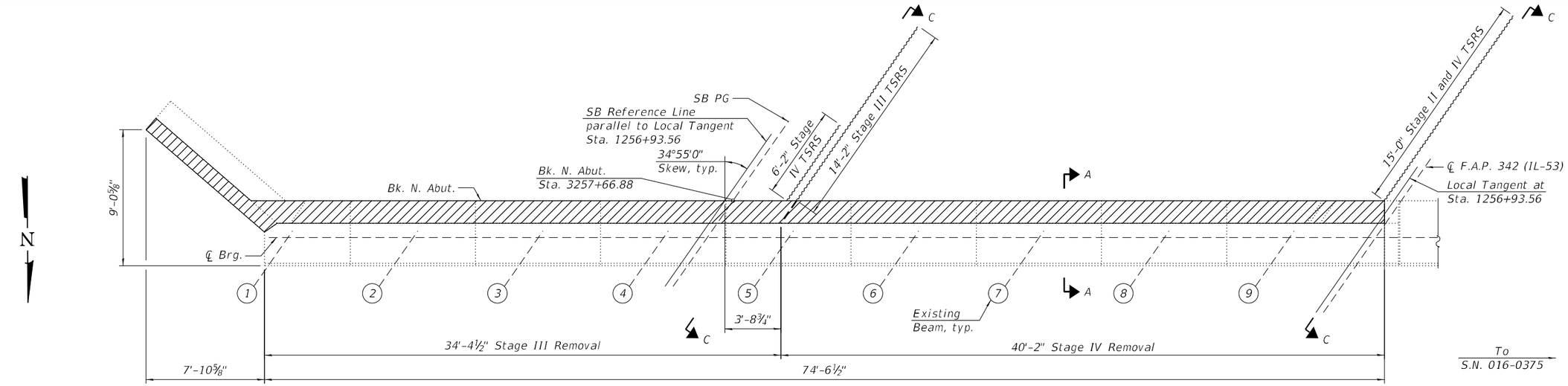

NORTH ABUTMENT PLAN

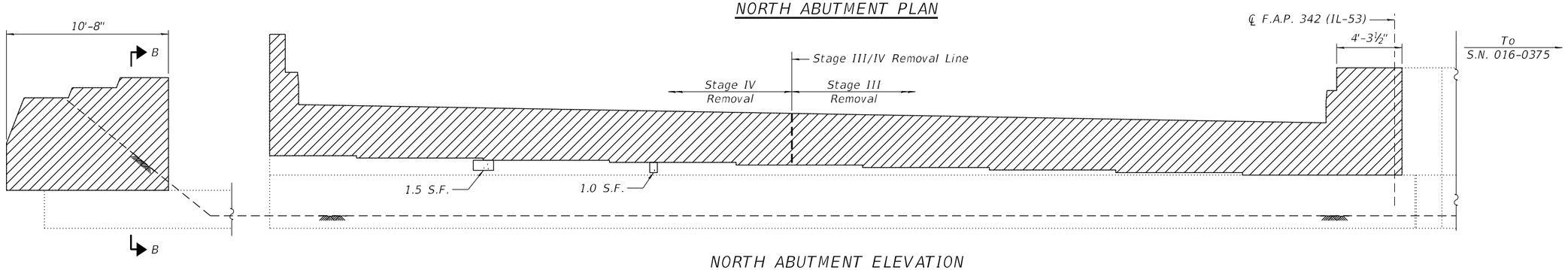

NORTH ABUTMENT ELEVATION

(Looking North)

LEGEND:

- Concrete Removal
- Structural Repair of Concrete (Depth equal to or less than 5 inches)
- Temporary Soil Retention System

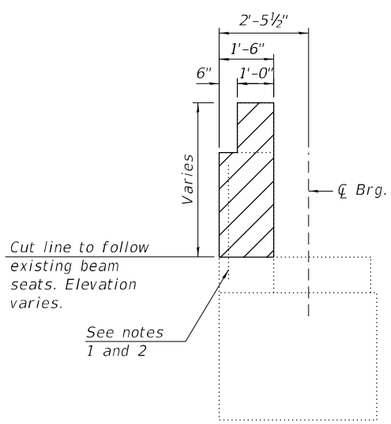

SECTION A-A

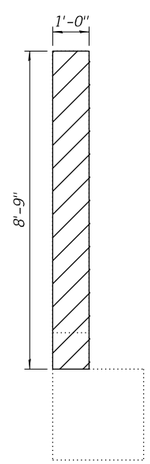

SECTION B-B

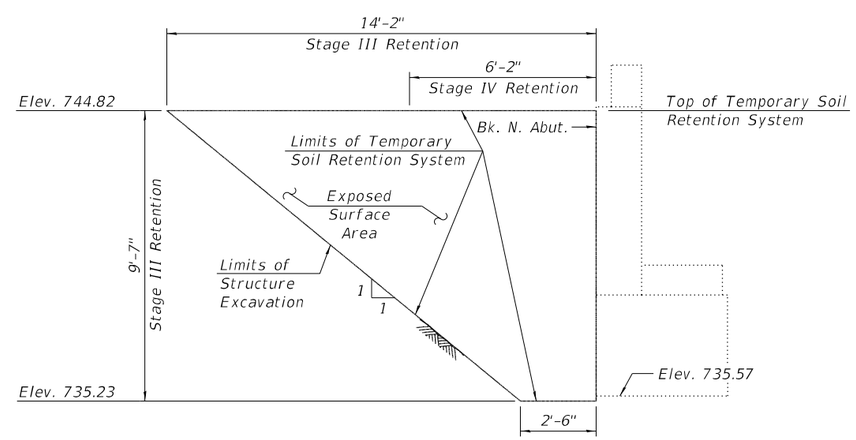

SECTION C-C TEMPORARY SOIL RETENTION SYSTEM

BILL OF MATERIALS

Item	Unit	Total
Concrete Removal	CU YD	21.4
Temporary Soil Retention System	SQ FT	128
Structural Repair of Concrete (Depth Equal to or Less Than 5	SQ FT	3

Notes:

1. Existing vertical reinforcement in back wall shall be cleaned and incorporated into new construction. Cost included in the cost of "Concrete Removal".
2. Any vertical reinforcement bars that are damaged during concrete removal operations shall be repaired or replaced using an approved bar splicer or anchorage system. Cost included in the cost of "Concrete Removal".
3. The elevations and dimensions shown are calculated based off existing plans and field measurements. The Contractor shall verify in field and make necessary approved adjustments prior to removals, repairs, or ordering of materials. For additional information, see select Existing Drawings.
4. A cantilevered sheet piling design does not appear feasible and additional members or other retention systems may be necessary. The Contractor shall submit a Temporary Soil Retention System design including plan details and calculations for review and acceptance by the Engineer.
5. Specified Temporary Soil Retention System will be used for 2 separate construction stages due to necessary modifications required between stages.
6. For Offset sketch, see sheet 2 of 48.

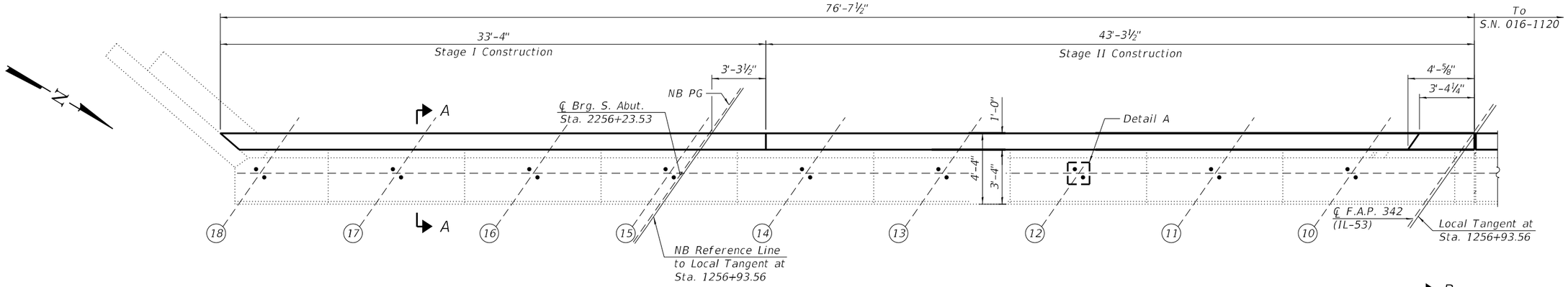

SOUTH ABUTMENT PLAN

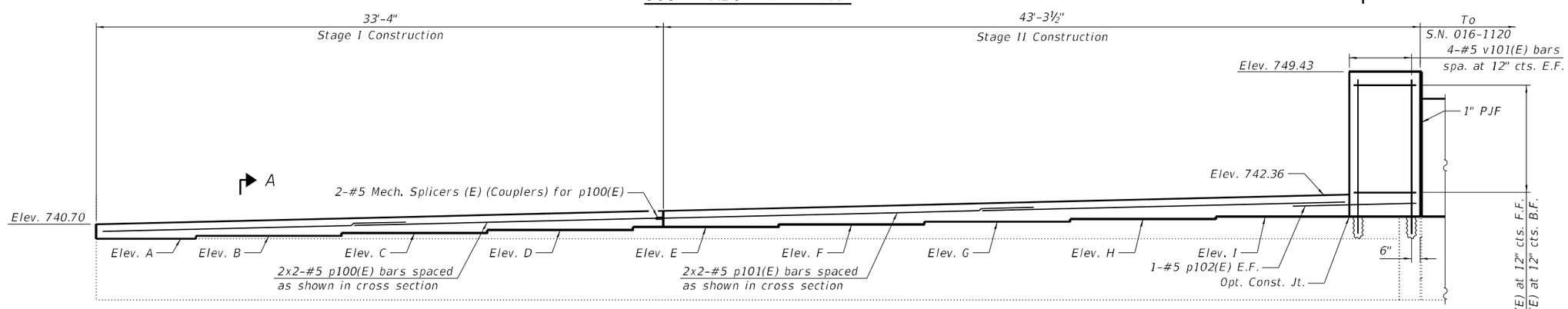

SOUTH ABUTMENT ELEVATION

(Looking South)

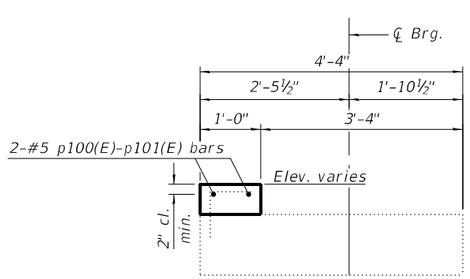

SECTION A-A

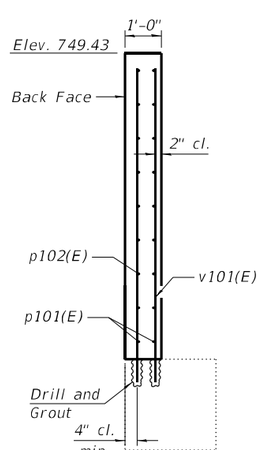

SECTION B-B

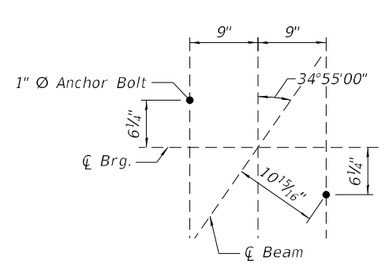

ANCHOR BOLT LOCATION PLAN

DETAIL A

SURVEYED ELEVATIONS	
A	739.795
B	739.952
C	740.097
D	740.269
E	740.422
F	740.59
G	740.768
H	740.913
I	741.074

Notes:

1. See sheet 38 of 48 for Bill of Materials.
2. Bars indicated thus 20 x 3-#5 etc. indicates 20 lines of bars with 3 lengths per line.
3. Cost of drilling and grouting reinforcing bars included in cost for Concrete Structures.
4. Bars shall be drilled and set according to Article 584 of the Standard Specifications. Bars shall have a 9" minimum embedment depth.
5. Elevations from survey are for quantity calculations only. Elevations are to be verified by the contractor prior to construction.

STRAND ASSOCIATES
1170 SOUTH HOUBOLT ROAD
JOLIET, ILLINOIS 60431
(815) 744-4200
IDFPR NO. 184-001273

USER NAME = codyh	DESIGNED - TJE	REVISED -	
	CHECKED - KRB	REVISED -	
PLOT SCALE = 0:2.0000 ':" / in.	DRAWN - CJH	REVISED -	
PLOT DATE = 9/20/2024	CHECKED - ELR	REVISED -	

STATE OF ILLINOIS
DEPARTMENT OF TRANSPORTATION

ABUTMENT PLAN AND ELEVATION (1 OF 2)
STRUCTURE NO. 016-0375 (NB)

SHEET 37 OF 48 SHEETS

F.A. RTE.	SECTION	COUNTY	TOTAL SHEETS	SHEET NO.
342	(531) BR 23	COOK	1211	795
		CONTRACT NO. 62W38		
	ILLINOIS	FED. AID PROJECT		

MODEL: Default
FILE NAME: S:\OL\6300-6399\6346\113\Drawings\CAD\Micros-Ss4\CAD_Sheets\0160375112062W38-037-APE1.dgn
9/20/2024 2:14:50 PM

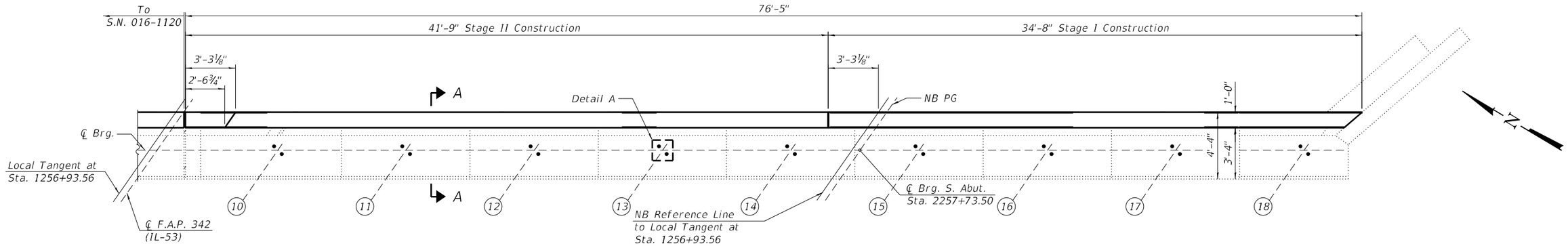

NORTH ABUTMENT PLAN

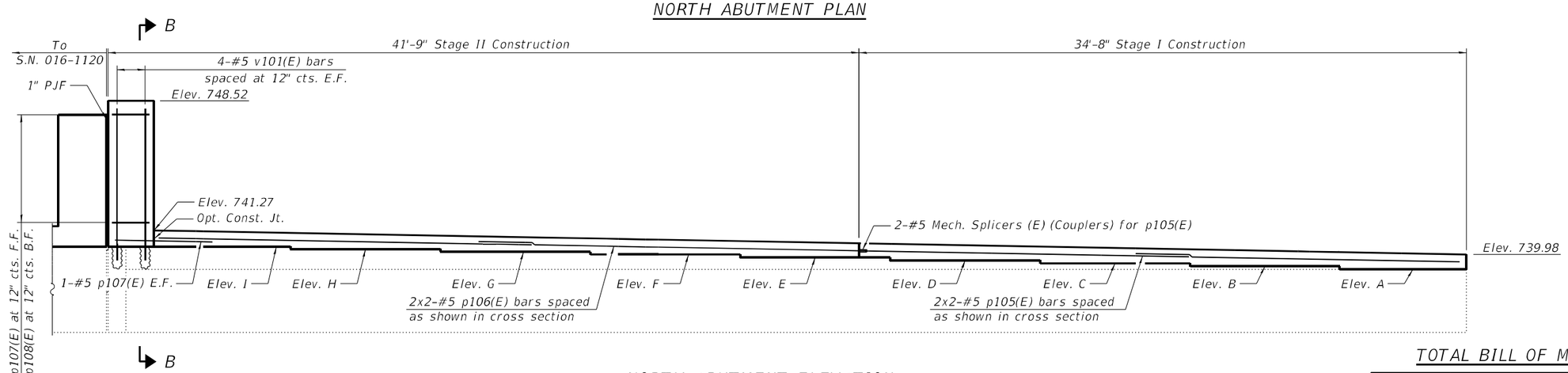

NORTH ABUTMENT ELEVATION

(Looking North)

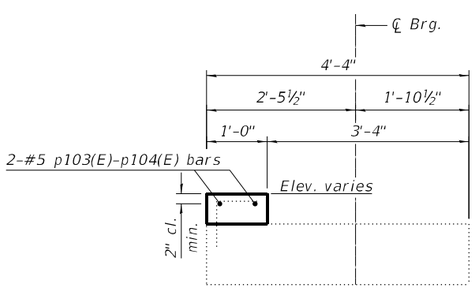

SECTION A-A

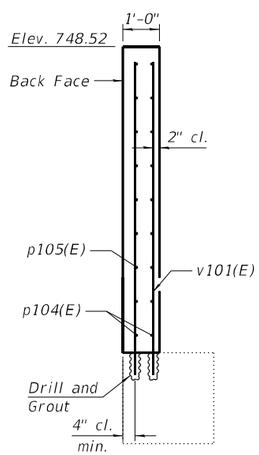

SECTION B-B

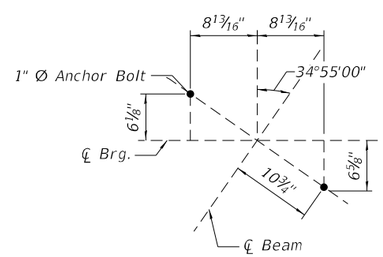

ANCHOR BOLT LOCATION PLAN

DETAIL A

SURVEYED ELEVATIONS	
A	738.984
B	739.162
C	739.311
D	739.473
E	739.637
F	739.793
G	739.949
H	740.069
I	740.202

TOTAL BILL OF MATERIALS

Bar	No.	Size	Length	Shape
p100(E)	4	#5	18'-0"	———
p101(E)	4	#5	23'-3"	———
p102(E)	2	#5	7'-1"	———
p103(E)	8	#5	3'-8"	———
p104(E)	8	#5	3'-1"	———
p105(E)	4	#5	18'-3"	———
p106(E)	4	#5	20'-7"	
p107(E)	2	#5	6'-3"	———
p108(E)	8	#5	2'-4"	———
p109(E)	8	#5	2'-10"	———
v101(E)	16	#5	9'-11"	———
Concrete Structures			CU YD	8.6
Reinforcement Bars, Epoxy Coated			POUND	630
Cleaning Beam Seats			SQ FT	422
Bar Splicers			EACH	4

Notes:

1. Bars indicated thus 20 x 3-#5 etc. indicates 20 lines of bars with 3 lengths per line.
2. See sheet 37 of 48 for detail A.
3. Cost of drilling and grouting reinforcing bars included in cost for Concrete Structures.
4. Bars shall be drilled and set according to Article 584 of the Standard Specifications. Bars shall have a 9" minimum embedment depth.
5. Elevations from survey are for quantity calculations only. Elevations are to be verified by the contractor prior to construction.

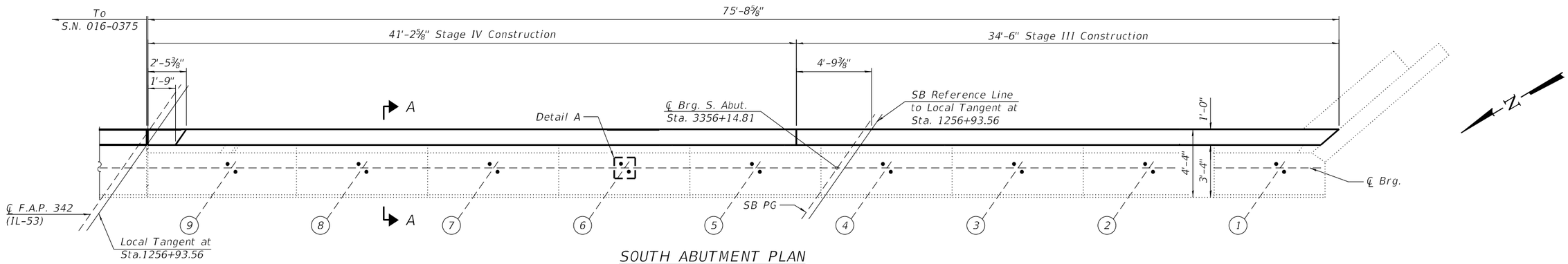

SOUTH ABUTMENT PLAN

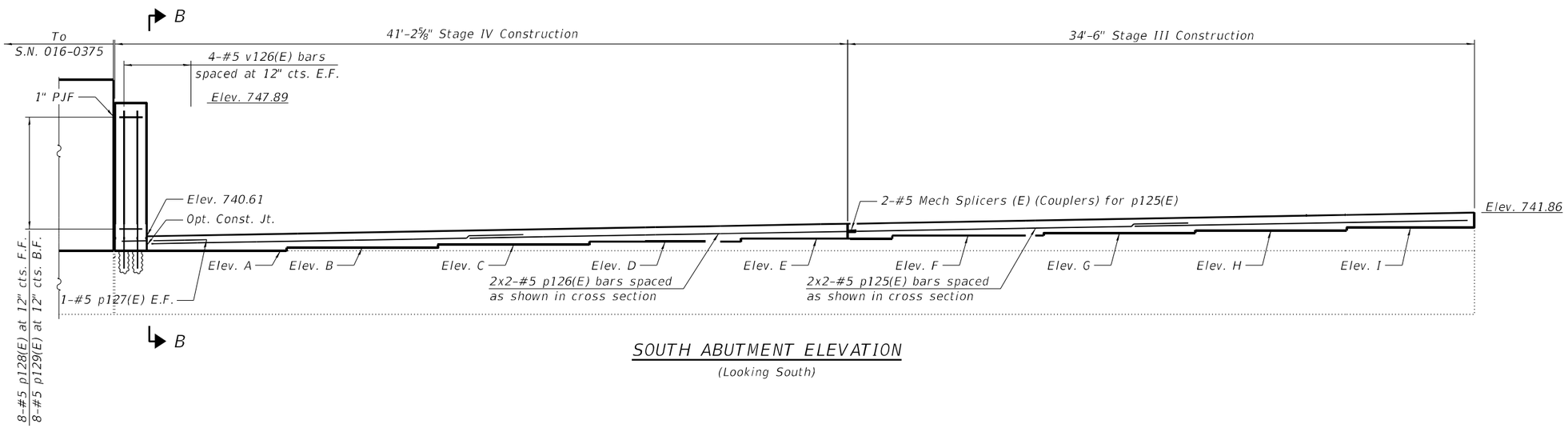

SOUTH ABUTMENT ELEVATION

(Looking South)

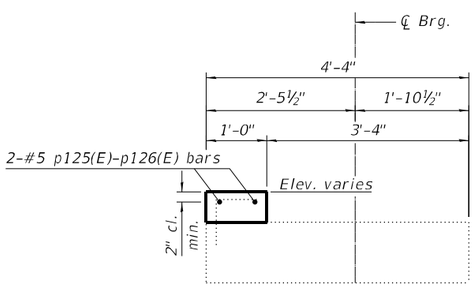

SECTION A-A

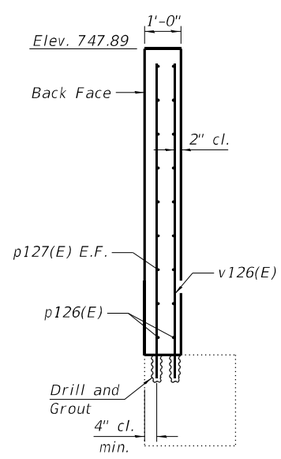

SECTION B-B

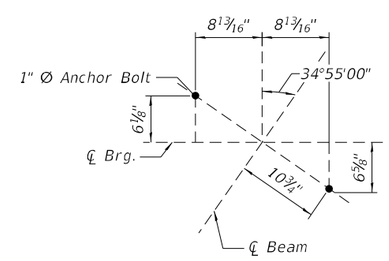

ANCHOR BOLT LOCATION PLAN

DETAIL A

SURVEYED ELEVATIONS	
A	739.718
B	739.88
C	740.045
D	740.207
E	740.367
F	740.541
G	740.679
H	740.836
I	740.958

Notes:

1. See sheet 40 of 48 for Bill of Materials.
2. Bars indicated thus 20 x 3-#5 etc. indicates 20 lines of bars with lengths per line.
3. Cost of drilling and grouting reinforcing bars included in cost for Concrete Structures.
4. Bars shall be drilled and set according to Article 584 of the Standard Specifications. Bars shall have a 9" minimum embedment depth.
5. Elevations from survey are for quantity calculations only. Elevations are to be verified by the contractor prior to construction.

MODEL: Default
FILE NAME: S:\IDL\6300-6399\6346\113\Drawings\CAD\Micro-SS4\CAD_Sheets\0160375112O-62W38-039-APE1.dgn

STRAND ASSOCIATES
1170 SOUTH HOUBOLT ROAD
JOLIET, ILLINOIS 60431
(815) 744-4200
IDFPR NO. 184-001273

USER NAME = codyh	DESIGNED - TJE	REVISED -	
	CHECKED - KRB	REVISED -	
PLOT SCALE = 0:2.0000 ':" / in.	DRAWN - CJH	REVISED -	
PLOT DATE = 9/20/2024	CHECKED - ELR	REVISED -	

STATE OF ILLINOIS
DEPARTMENT OF TRANSPORTATION

ABUTMENT PLAN AND ELEVATION (1 OF 2)
STRUCTURE NO. 016-1120 (SB)

SHEET 39 OF 48 SHEETS

F.A. RTE.	SECTION	COUNTY	TOTAL SHEETS	SHEET NO.
342	(531) BR 23	COOK	1211	797
		CONTRACT NO. 62W38		
	ILLINOIS	FED. AID PROJECT		

9/20/2024 2:14:53 PM

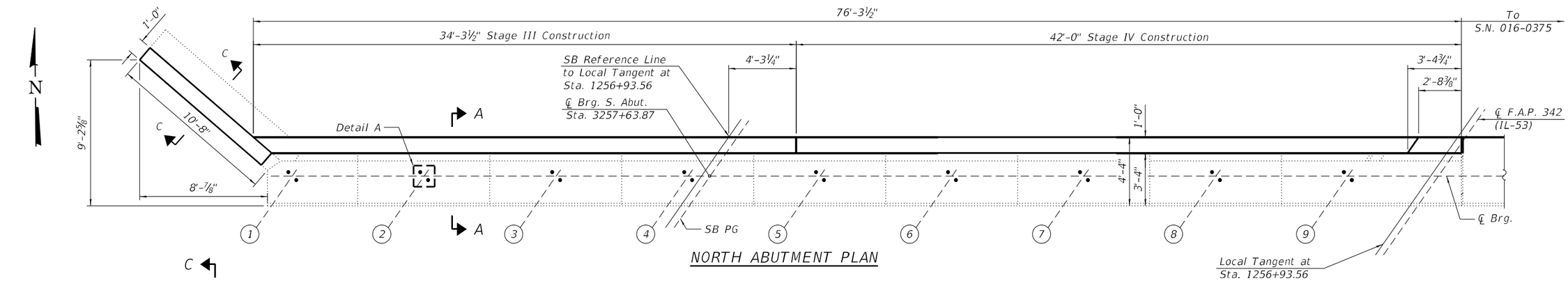

NORTH ABUTMENT PLAN

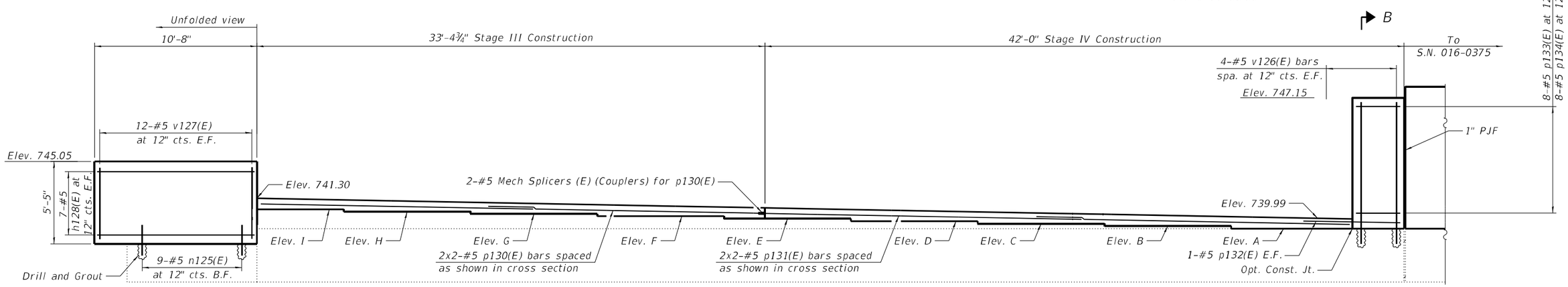

NORTH ABUTMENT ELEVATION

(Looking North)

TOTAL BILL OF MATERIALS

Bar	No.	Size	Length	Shape
h128(E)	14	#5	10'-4"	———
n125(E)	9	#5	3'-5"	———
p125(E)	4	#5	18'-6"	———
p126(E)	4	#5	20'-9"	———
p127(E)	2	#5	5'-6"	———
p128(E)	8	#5	2'-0"	———
p129(E)	8	#5	1'6"	———
p130(E)	4	#5	18'-0"	———
p131(E)	8	#5	20'-6"	
p132(E)	2	#5	6'-6"	———
p133(E)	8	#5	3'-0"	———
p134(E)	8	#5	2'-5"	———
v126(E)	16	#5	8'-8"	———
v127(E)	22	#5	5'-1"	———
Concrete Structures			CU YD	8.2
Reinforcement Bars, Epoxy Coated			POUND	780
Cleaning Beam Seats			SQ FT	422
Bar Splicers			EACH	4

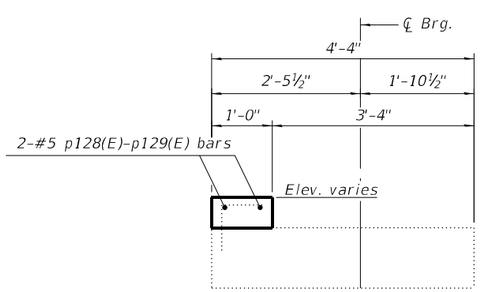

SECTION A-A

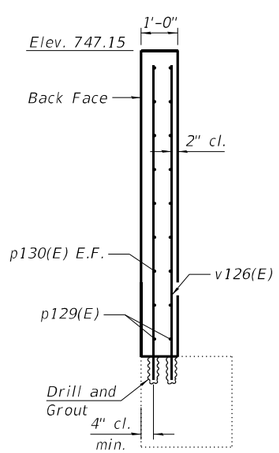

SECTION B-B

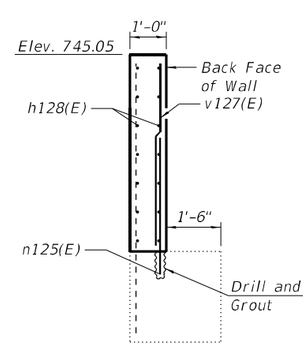

SECTION C-C

SURVEYED ELEVATIONS	
A	739.067
B	739.226
C	739.418
D	739.602
E	739.755
F	739.911
G	740.06
H	740.219
I	740.384

Notes:

1. See sheet 39 of 48 for detail A.
2. Bars indicated thus 20 x 3-#5 etc. indicates 20 lines of bars with 3 lengths per line.
3. Cost of drilling and grouting reinforcing bars included in cost for Concrete Structures.
4. Bars shall be drilled and set according to Article 584 of the Standard Specifications. Bars shall have a 9" minimum embedment depth.
5. Elevations from survey are for quantity calculations only. Elevations are to be verified by the contractor prior to construction.

MODEL: Default
FILE NAME: S:\IOL\6300--6399\6346\113\Drawings\CAD\Micro-SSA\CAD_Sheets\0160375112062W38-040-APE2.dgn

STRAND ASSOCIATES
1170 SOUTH HOUBOLT ROAD
JOLIET, ILLINOIS 60431
(815) 744-4200
IDFPR NO. 184-001273

USER NAME = codyh	DESIGNED - TJE	REVISED -	
	CHECKED - KRB	REVISED -	
PLOT SCALE = 0:2.0000 ':" / in.	DRAWN - CJH	REVISED -	
PLOT DATE = 9/20/2024	CHECKED - ELR	REVISED -	

STATE OF ILLINOIS
DEPARTMENT OF TRANSPORTATION

ABUTMENT PLAN AND ELEVATION (2 OF 2)
STRUCTURE NO. 016-1120 (SB)

SHEET 40 OF 48 SHEETS

F.A. RTE.	SECTION	COUNTY	TOTAL SHEETS	SHEET NO.
342	(531) BR 23	COOK	1211	798

CONTRACT NO. 62W38

ILLINOIS | FED. AID PROJECT

9/20/2024 2:14:54 PM

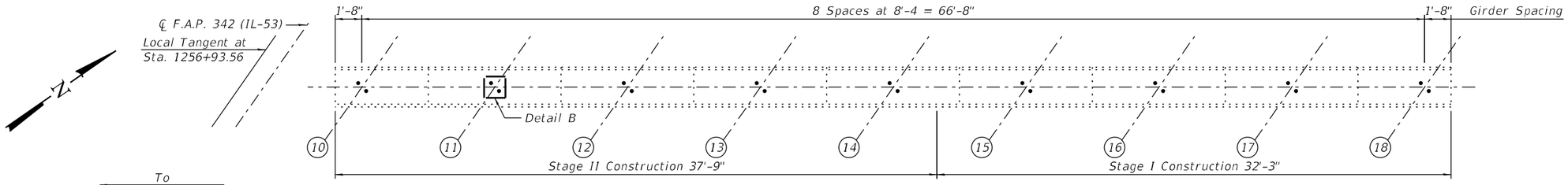

TYPICAL PIER PLAN

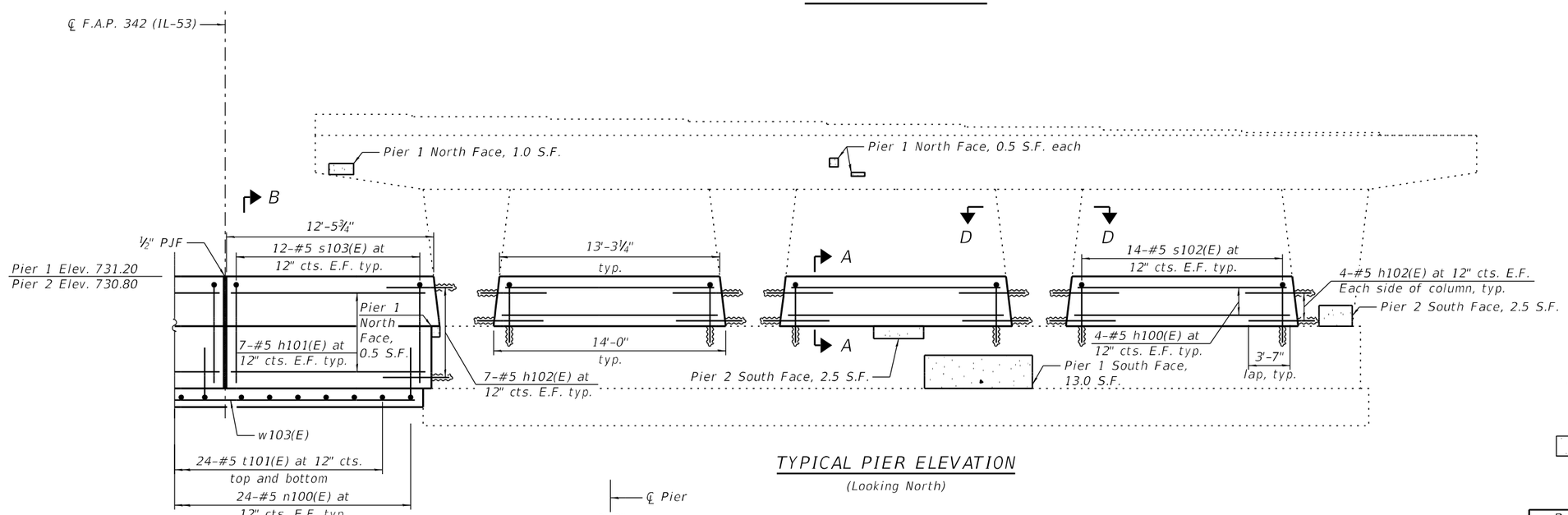

TYPICAL PIER ELEVATION

(Looking North)

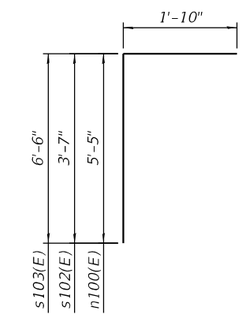

BARS s102(E), s103(E), n100(E)

LEGEND

Structural Repair of Concrete
(Depth Equal to or Less Than 5 Inches)

TOTAL BILL OF MATERIAL

Bar	No.	Size	Length	Shape
h100(E)	48	#5	11'-11"	
h101(E)	28	#5	12'-0"	
h102(E)	124	#5	4'-8"	
n100(E)	96	#5	7'-3"	
s102(E)	168	#5	5'-5"	
s103(E)	48	#5	8'-4"	
t101(E)	48	#5	3'-0"	
w103(E)	8	#5	24'-1"	
Concrete Structures			CU YD	37.6
Reinforcement Bars, Epoxy Coated			POUND	4,000
Cleaning Bridge Seats			SQ FT	350
Structural Repair of Concrete (Depth Equal to or Less Than 5 Inches)			SQ FT	21

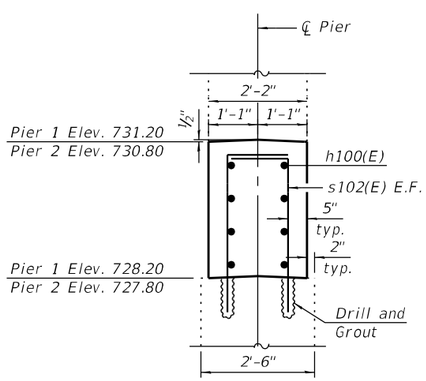

SECTION A-A

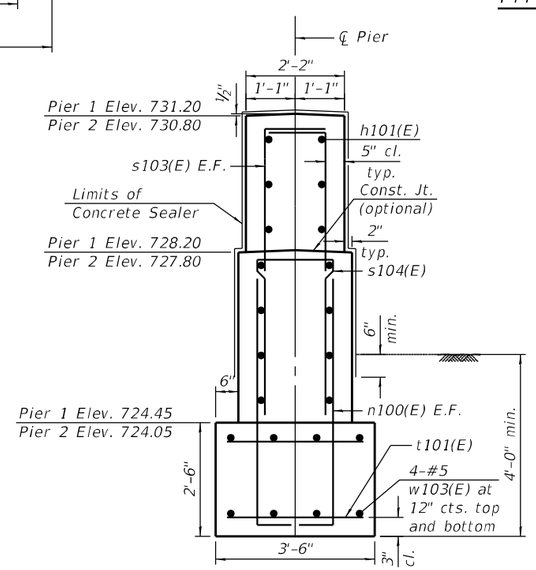

SECTION B-B

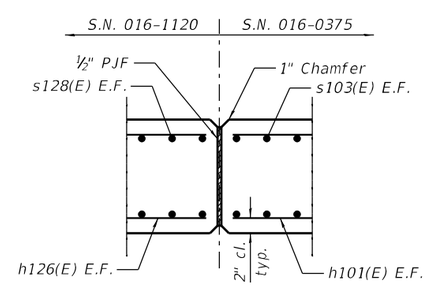

SECTION C-C

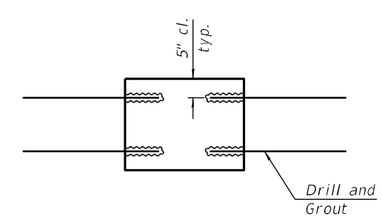

SECTION D-D

Notes:
1. See sheet 42 of 48 for detail B.
2. Cost of drilling and grouting reinforcing bars included in cost for Concrete Structures.
3. Bars shall be drilled and set according to Article 584 of the Standard Specifications. Bars shall have a 9" minimum embedment depth.

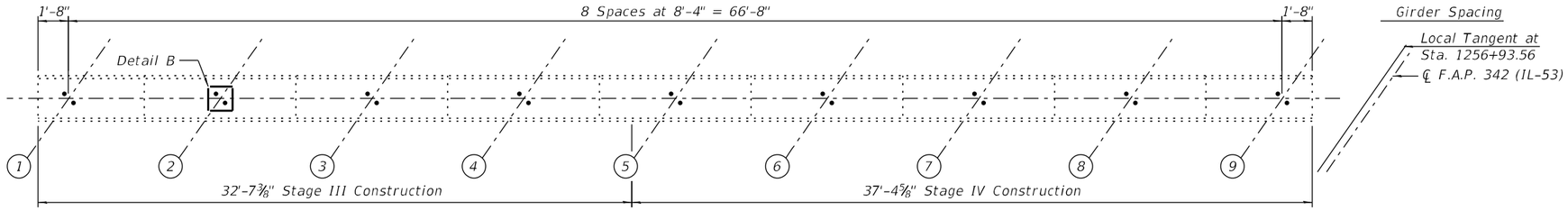

TYPICAL PIER PLAN

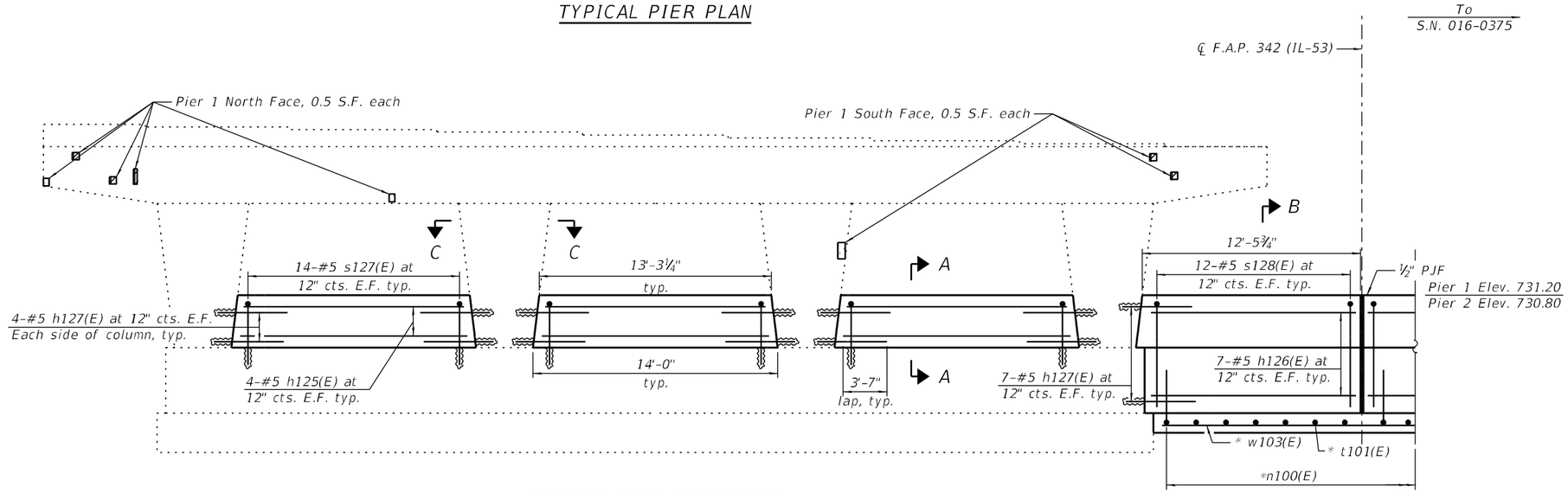

TYPICAL PIER ELEVATION

(Looking North)

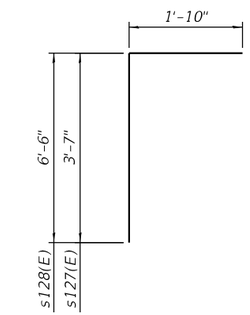

BARS s127(E), s128(E)

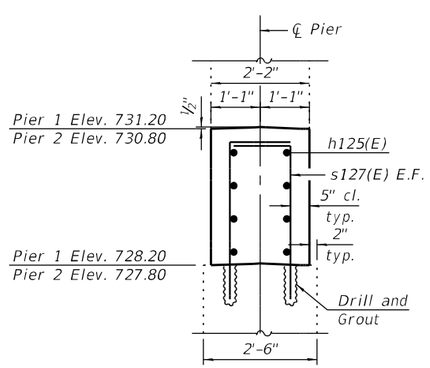

SECTION A-A

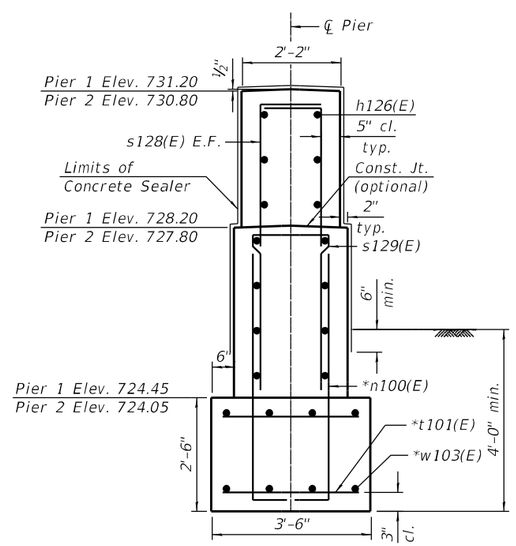

SECTION B-B

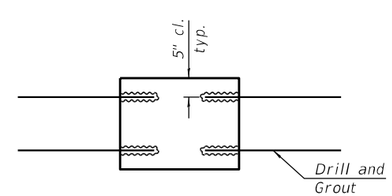

SECTION C-C

	A	B	C	D	E
Pier 1	7 3/4"	5 1/2"	6"	9 1/2"	1"
Pier 2	9 3/8"	6 5/8"	7 1/4"	11 1/2"	1 1/4"

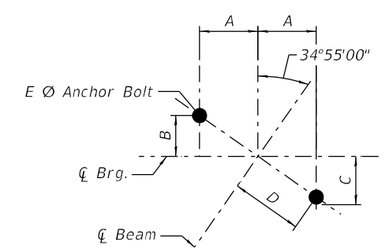

ANCHOR BOLT LOCATION PLAN
DETAIL B

LEGEND

Structural Repair of Concrete
(Depth Equal to or Less Than 5 Inches)

*See sheet 40 for bar schedule

TOTAL BILL OF MATERIALS

Bar	No.	Size	Length	Shape
h125(E)	48	#5	11'-11"	
h126(E)	28	#5	12'-0"	
h127(E)	124	#5	4'-8'	
s127(E)	168	#5	5'-5"	
s128(E)	48	#5	8'-4"	
Concrete Structures			CU YD	37.6
Reinforcement Bars, Epoxy Coated			POUND	2,920
Cleaning Bridge Seats			SQ FT	350
Structural Repair of Concrete (Depth Equal to or Less Than 5 Inches)			SQ FT	4

Notes:
1. Cost of drilling and grouting reinforcing bars included in cost for Concrete Structures.
2. Bars shall be drilled and set according to Article 584 of the Standard Specifications. Bars shall have a 9" minimum embedment depth.