THIS PAGE IS INTENTIONALLY LEFT BLANK

LT–71

MODEL: Default
FILE NAME: U:\60 Projects\22145\04_CADD\CADD_Sheets\Contract 3\D162V38-idot-int-light-15.dgn

SINGH + ASSOCIATES, INC. CONSULTING ENGINEERS	USER NAME = vnunez	DESIGNED - MAG	REVISED -	STATE OF ILLINOIS DEPARTMENT OF TRANSPORTATION	VILLAGE OF ROLLING MEADOWS LIGHT POLE AND LIGHT POLE FOUNDATION DETAILS	F.A.P. RTE.	SECTION	COUNTY	TOTAL SHEETS	SHEET NO.
		DRAWN - ML	REVISED -			342	(531) BR 23	COOK	1211	601
	PLOT SCALE = 100.0000 ' / in.	CHECKED - MG/RP	REVISED -					CONTRACT NO. 62W38		
	PLOT DATE = 8/22/2024	DATE - 07/19/2024	REVISED -		SCALE: 1" = 50' SHEET 1 OF 1 SHEETS STA. 1199+00.00 TO STA. 1213+50.00			ILLINOIS FED. AID PROJECT		

GENERAL NOTES

1. A MINIMUM OF SEVENTY-TWO (72) HOURS BEFORE STARTING ANY EXCAVATION, THE CONTRACTOR SHALL CALL J.U.L.I.E. AT (800-892-0123) OR 811 TO HAVE THE LOCATION OF EXISTING UNDERGROUND UTILITIES MARKED IN THE FIELD.

2. IDOT FACILITIES ARE NOT LOCATED BY JULIE OR DIGGER. IDOT ELECTRICAL FACILITIES INCLUDING ROADWAY LIGHTING, FIBER OPTIC, ITS EQUIPMENT, TRAFFIC SIGNAL AND PUMP STATION FACILITIES ARE LOCATED BY THE DEPARTMENT'S ELECTRICAL MAINTENANCE CONTRACTOR. AS OF THE LETTING DATE, CONTACT MEADE ELECTRIC COMPANY AT 773-287-7672.

3. AFTER THE INITIAL LOCATE OF IDOT FACILITIES, THE CONTRACTOR WILL BE RESPONSIBLE FOR LOCATING EXISTING IDOT ELECTRICAL FACILITIES AT HIS/HER OWN EXPENSE. THE CONTRACTOR SHALL ALSO BE LIABLE FOR ANY DAMAGE TO IDOT FACILITIES RESULTING FROM INACCURATE LOCATING.

4. THE CONTRACTOR SHALL BE RESPONSIBLE FOR THE PROTECTION OF ALL UNDERGROUND OR SURFACE UTILITIES EVEN THOUGH THEY MAY NOT BE SHOWN IN THE PLANS. ANY UTILITY THAT IS DAMAGED DURING CONSTRUCTION SHALL BE REPAIRED OR REPLACED TO THE SATISFACTION OF THE ENGINEER. THIS WORK WILL BE AT THE CONTRACTOR'S EXPENSE.

5. THE LOCATIONS OF PUBLIC OR PRIVATE UTILITIES SHOWN ON THE PLANS ARE APPROXIMATE AND THEIR ACCURACY IS NOT GUARANTEED. THE CONTRACTOR SHALL VERIFY THE EXACT LOCATION AND ELEVATION OF ALL UTILITIES. THE CONTRACTOR SHALL REPORT ANY ENCOUNTERED DISCREPANCIES TO THE ENGINEER AT ONCE. THE CONTRACTOR SHALL TAKE DUE CARE.

6. POTHOLING TO LOCATE EXISTING UNDERGROUND UTILITIES SHALL BE INCLUDED IN THE CONTRACT BID PRICE FOR THE UNDERGROUND CONDUIT PAY ITEMS.

7. THE CONTRACTOR IS RESPONSIBLE FOR THE COST OF UNCOVERING OR HAND DIGGING AROUND UTILITIES AS NECESSARY. THE COST OF THIS WORK SHALL BE INCLUDED IN THE UNIT PRICES FOR THE CONDUITS.

8. THE CONTRACTOR SHALL VERIFY ADEQUATE CLEARANCE OVER/UNDER EXISTING AND PROPOSED FACILITIES BEFORE INSTALLING DUCTS, CONDUIT AND CABLES. WHERE THE CONTRACTOR'S EXCAVATION MEETS AN OBSTRUCTION, THE CONTRACTOR SHALL NOTIFY THE ENGINEER FOR DIRECTION IN WRITING PRIOR TO EXCAVATION.

9. CONDUIT CROSSING OVER/UNDER OTHER UTILITIES SHALL MAINTAIN A SEPERATION OF AT LEAST 12 INCHES OR AS SPECIFIED BY OWNING UTILITY.

10. CONDUITS AND UNIT DUCTS SHALL BE INSTALLED AT A MINIMUM 30" DEPTH BELOW GRADE AND POSITIONED IN THE FIELD TO AVOID CONFLICT WITH ROADWAY UNDERDRAINS AND OTHER EXISTING AND PROPOSED UTILITIES.

11. NO ADDITIONAL COMPENSATION SHALL BE ALLOWED FOR PLACING CONDUIT AT GREATER THAN 30 INCHES MINIMUM DEPTH TO AVOID OBSTACLES SUCH AS UNDERGROUND UTILITIES AND STRUCTURES OR TO ENTER COMMUNICATIONS VAULTS OR HANDHOLES.

12. THE CONTRACTOR SHALL AVOID TRENCHING THROUGH WETLAND AREA, ROADSIDE DITCHES AND RETENTION PONDS.

13. IDOT MICRODUCT SHALL ONLY ENTER IDOT COMMUNICATIONS VAULTS OR JUNCTION BOXES.

14. THE COMMUNICATION VAULT SHALL BE CONSTRUCTED SO THAT THE TOP OF THE FRAME WILL BE FLUSH WITH THE SURFACE OF THE MEDIAN, SIDEWALK, OR GROUND LINE.

15. IT SHALL BE THE CONTRACTOR'S RESPONSIBILITY TO VERIFY ALL DIMENSIONS AND CONDITIONS EXISTING IN THE FIELD PRIOR TO ORDERING MATERIALS AND BEGINNING CONSTRUCTION.

16. ITS REMOVAL PLAN SHEETS DEPICT EXISTING CONDITIONS AND WORK TO BE PERFORMED TO MAINTAIN, REMOVE, SALVAGE, OR ABANDON EXISTING ITS INFRASTRUCTURE. PROPOSED ITS PLAN SHEETS DEPICT NEW ITS INFRASTRUCTURE TO BE INSTALLED.

17. ALL EXCAVATED MATERIAL, WHICH INCLUDES DIGGING OR GRADING OF ANY SOIL OR FILL MATERIAL, WITH THE EXCEPTION OF AGGREGATE FILLS, MUST BE INCORPORATED WITHIN THE IDOT RIGHT OF WAY DUE TO ENVIRONMENTAL DOCUMENTATION REQUIREMENTS. EXCAVATED MATERIALS SHALL BE DISPOSED OF AT LOCATIONS DESIGNATED BY THE ENGINEER. ANY SUCH DISPOSAL SHALL BE COMPLETED IN SUCH A MANNER THAT PUBLIC OR PRIVATE PROPERTY WILL NOT BE DAMAGED OR ENDANGERED AND SHALL NOT CREATE AN UNSIGHTLY OR OBJECTIONABLE APPEARANCE OR DETRACT FORM THE NATURAL TOPOGRAPHIC FEATURES WITHOUT WRITTEN PERMISSION FROM THE ENGINEER.

18. ALL SURPLUS MATERIALS SHALL BE DISPOSED OF IN ACCORDANCE WITH ARTICLE 202.03 OF THE STANDARD SPECIFICATIONS.

19. ELECTRICAL WORK SHALL CONFORM WITH NATIONAL, STATE, AND LOCAL CODES.

20. ANY REFERENCE TO A STANDARD IN THESE PLANS SHALL BE INTERPRETED TO MEAN THE EDITION AS INDICATED BY THE SUBNUMBER SHOWN IN THE LIST OF STANDARDS OR THE COPY INCLUDED IN THESE PLANS.

21. ELECTRICAL HANDHOLE COVER LEGEND SHALL BE "IDOT ITS".

22. ITS SYMBOLS ARE OVERSIZED ON THE PLANS FOR CLARITY. CONTRACTOR SHALL USE STATIONS AND OFFSETS TO ACCURATELY LOCATE EQUIPMENT.

23. FIBER OPTIC DISTRIBUTION AND LATERAL CABLES SHALL BE INSTALLED BETWEEN COMMUNICATIONS VAULTS AND CABINETS AS SHOWN ON THE PLANS. FIBER OPTIC SLACK SHALL BE AS FOLLOWS:
    - 100 FEET FOR EACH CABLE IN COMMUNICATIONS VAULTS.
    - 50 FEET FOR EACH CABLE IN HEAVY-DUTY HANDHOLES AND DOUBLE HANDHOLES
    - 25 FEET FOR EACH CABLE IN JUNCTION BOXES.
    - 13 FEET FOR EACH CABLE AT CABINETS

24. A MAINLINE SPLICE SHALL NOT BE IN THE SAME COMMUNICATION VAULT AS A LATERAL SPLICE NOR ANOTHER MAINLINE SPLICE

LIST OF ABBREVIATIONS

NOTATION	DESCRIPTION
(A)	TO BE ABANDONED IN PLACE OR REMOVED BY OTHERS
(E)	EXISTING, TO REMAIN IN PLACE
(I)	INSTALL
(R)	REMOVE
ATS	ATTACHED TO STRUCTURE
CCTV	CLOSED-CIRCUIT TELEVISION
CNC	COILABLE NONMETALLIC CONDUIT
COMM	COMMUNICATIONS
DMS	DYNAMIC MESSAGE SIGN
EIS	EMBEDDED IN STRUCTURE
EX	EXISTING
FDN	FOUNDATION
FRE	FIBERGLASS REINFORCED EPOXY
GRN	GROUND
HDPE	HIGH DENSITY POLYETHYLENE
HD HH	HEAVY DUTY HANDHOLE
HH	HANDHOLE
IDOT	ILLINOIS DEPARTMENT OF TRANSPORTATION
JB	JUNCTION BOX
MM	MULTIMODE
MP	MILEPOST
PR	PROPOSED
RGS	RIGID GALVANIZED STEEL
RNM	RIGID NONMETALLIC
ROW	RIGHT-OF-WAY
SM	SINGLE MODE
SS	STAINLESS STEEL
TYP	TYPICAL
RL	RELOCATE

DEVICE LEGEND

EXISTING TO REMOVE	EXISTING TO REMAIN	TEMPORARY	PROPOSED	DESCRIPTION
			C	COMMUNICATION VAULT
R H	H		H	HEAVY DUTY HANDHOLE
R J	J		J	JUNCTION BOX
R D	D		D	DISCONNECT SWITCH
R				CABINET
		●		POLE (TYPE AND HEIGHT AS NOTED)
	E		PTZ	CCTV CAMERA
R				INDUCTION LOOP
R				ROUND INDUCTION LOOP
				WIRELESS IN-PAVEMENT DETECTOR
			R	WIRELESS REPEATER
			AP	WIRELESS DETECTOR ACCESS POINT
		BT		TEMPORARY BLUETOOTH DETECTOR
				DYNAMIC MESSAGE SIGN
R			M	ELECTRIC SERVICE (PROPOSED SERVICES ARE METERED)
R				TELELPHONE SERVICE
				UTILITY SERVICE POLE

CONDUIT LEGEND

EXISTING	PROPOSED	DESCRIPTION
- - - - - - -	— ——— —	TRAFFIC SURVEILLANCE CONDUIT (TYPE, SIZE, AND CONTENTS AS NOTED)
	[ ]	CONDUIT CASING (TYPE AND SIZE AS NOTED)
	═══	CONDUIT ATTACHED TO STRUCTURE (TYPE AND SIZE AS NOTED)
—— FO ——	—— FO ——	FIBER OPTIC CABLE (TYPE AND SIZE AS NOTED) IN CONDUIT (TYPE AND SIZE AS NOTED)
	—— E ——	ELECTRIC CABLE IN CONDUIT (TYPE, SIZE, AND CONTENTS AS NOTED)

INDEX OF DRAWINGS

SCHEDULE OF DEVICES

SITE NO.	ROUTE	DIRECTION	STATION	OFFSET	NORTHING	EASTING	DEVICE DESIGNATION	DEVICE TYPE	LOWERING DEVICE	DEVICE STATUS	MOUNTING HEIGHT	POLE/STRUCTURE TYPE	POLE/STRUCTURE STATUS
1	IL 53	SB	1204+02	99' LT	1972503.21	1066360.1	CAB-144	CABINET	INSTALL	INSTALL	N/A	CABINET FDN	INSTALL
2	IL 53	SB	1204+25	99' LT	1972536.4	1066351.78	CCTV-IL53-02	PTZ CCTV CAM	INSTALL	INSTALL	80'	80' GS	INSTALL
3	IL 53	SB	1226+68	93' LT	1974785.99	1066194.08	CAB-146	CABINET	INSTALL	INSTALL	N/A	CABINET FDN	INSTALL
4	IL 53	SB	1226+96	95' LT	1974824.83	1066195.97	CCTV-IL53-03	PTZ CCTV CAM	INSTALL	INSTALL	80'	80' GS	INSTALL
5	IL 53	NB	1234+45	82' RT	1975520.96	1066504.02	CAB-135	CABINET	INSTALL	INSTALL	N/A	CABINET FDN	INSTALL
6	IL 53	NB	1234+95	90' RT	1975566.09	1066523.61	CCTV-IL53-04	PTZ CCTV CAM	INSTALL	INSTALL	80'	80' GS	INSTALL
7	IL 53	SB	1261+61	32' LT	1977960.83	1067618.49	DMS-XX-XXXX	DMS	N/A	EX TO REMAIN	EX TO REMAIN	EX OVERHEAD SPAN	N/A
8	IL 53	SB	1262+76	72' LT	1978075.46	1067663.49	CAB-148	CABINET	INSTALL	INSTALL	N/A	CABINET FDN	INSTALL
9	IL 53	SB	1263+56	81' LT	1978141.68	1067709.93	CCTV-IL53-05	PTZ CCTV CAM	INSTALL	INSTALL	80'	80' GS	INSTALL
10	IL 53	SB	1288+95	94' LT	1979684.86	1069743.09	CCTV-IL53-06	PTZ CCTV CAM	INSTALL	INSTALL	80'	80' GS	INSTALL
11	IL 53	SB	1289+56	108' LT	1979727.39	1069789.39	CAB-150	CABINET	INSTALL	INSTALL	N/A	CABINET FDN	INSTALL
12	IL 53	SB	1336+02	87' LT	1982325.7	1073504.4	CCTV-IL53-07	PTZ CCTV CAM	INSTALL	INSTALL	80'	80' GS	INSTALL
13	IL 53	SB	1336+45	88' RT	1982363.51	1073522.35	CAB-152	CABINET	INSTALL	INSTALL	N/A	CABINET FDN	INSTALL
14	IL 53	NB	1348+13	90' RT	1983442.8	1073979.46	CAB-137	CABINET	INSTALL	INSTALL	N/A	CABINET FDN	INSTALL
15	IL 53	NB	1348+78	87' LT	1983510.82	1073978.68	CCTV-IL53-08	PTZ CCTV CAM	INSTALL	INSTALL	80'	80' GS	INSTALL
16	IL 53	SB	1379+74	88' LT	1986556.81	1073337.82	CAB-154	CABINET	INSTALL	INSTALL	N/A	CABINET FDN	INSTALL
17	IL 53	SB	1380+19	87' LT	1986601.81	1073332.05	CCTV-IL53-09	PTZ CCTV CAM	INSTALL	INSTALL	80'	80' GS	INSTALL

NOTE: TRAFFIC SIGNAL DEVICES AND HANDHOLES ARE NOT INCLUDED IN THIS SCHEDULE. SEE TRAFFIC SIGNAL AND INTERCONNECT DRAWINGS FOR DETAILS.

SCHEDULE OF HANDHOLES AND COMMUNICATION VAULTS

CONTRACT	TYPE	ID	STATION	OFFSET	NORTHING	EASTING
62W38	CMV	CMV-02-01	1188+00	86' LT	1970972.46	1066839.90
62W38	HANDHOLE	HHF-02-01	1203+60	100' LT	1972461.78	1066370.12
62W38	CMV	CMV-02-02	1204+00	72' LT	1972508.32	1066386.39
62W38	HANDHOLE	HHF-02-02	644+29	39' LT	1972503.71	1066618.54
62W38	CMV	CMV-02-03	1206+35	95' LT	1972733.89	1066306.34
62W38	CMV	CMV-02-04	1208+28	82' LT	1972928.16	1066278.40
62W38	CMV	CMV-02-05	1221+00	75' LT	1974210.13	1066173.52
62W38	HANDHOLE	HHF-02-03	1224+25	82' RT	1974527.33	1066345.24
62W38	HANDHOLE	HHF-02-04	1225+70	98' LT	1974687.31	1066178.26
62W38	CMV	CMV-02-06	1227+98	85' LT	1974915.71	1066218.03
62W38	CMV	CMV-02-07	409+40	65' RT	1974914.33	1066152.50
62W38	CMV	CMV-02-08	409+45	61' LT	1975040.30	1066158.16
62W38	CMV	CMV-02-09	1234+45	71' LT	1975556.48	1066355.11
62W38	HANDHOLE	HHF-02-05	735+15	48' LT	1975532.77	1066552.50
62W38	HANDHOLE	HHF-02-06	777+37	37' LT	1974447.89	1066591.65
62W38	HANDHOLE	HHF-02-07	897+40	32'LT	1974728.39	1066866.21
62W38	HANDHOLE	HHF-02-08	741+22	38' LT	1975130.48	1066897.02
62W38	CMV	CMV-03-01	1255+41	92' LT	1977496.38	1067194.67
62W38	CMV	CMV-03-02	1257+52	77' LT	1977663.10	1067329.62
62W38	CMV	CMV-03-03	1262+49	94' LT	1978068.85	1067628.88
62W38	HANDHOLE	HHF-03-01	1263+06	71' LT	1978097.40	1067684.13
62W38	CMV	CMV-03-04	1270+48	90' LT	1978644.13	1068200.05
62W38	CMV	CMV-03-05	1279+85	144' LT	1979263.97	1068927.64
62W38	CMV	CMV-03-06	1283+56	271' LT	1979568.89	1069188.04
62W38	HANDHOLE	HHF-03-02	1289+65	200' LT	1979811.41	1069751.16
62W38	CMV	CMV-03-07	1290+19	205' LT	1979842.70	1069795.46
62W38	CMV	CMV-03-08	1293+38	362' LT	1980137.99	1069993.48
62W38	CMV	CMV-03-09	1312+24	83' LT	1980837.81	1071766.92
62W38	CMV	CMV-03-10	1331+86	164' LT	1982029.52	1073230.14
62W38	CMV	CMV-03-11	1336+53	72' LT	1982363.30	1073540.41
62W38	HANDHOLE	HHF-03-03	1337+15	85' LT	1982423.18	1073554.91
62W38	HANDHOLE	HHF-03-04	1337+20	82' RT	1982356.89	1073708.27
62W38	HANDHOLE	HHF-03-05	1338+45	416' RT	1982347.27	1074068.81
62W38	CMV	CMV-03-12	1341+42	109' LT	1982816.61	1073677.93
62W38	CMV	CMV-03-13	1343+31	120' LT	1982994.82	1073711.90
62W38	CMV	CMV-03-14	1347+84	76' LT	1983421.58	1073812.89
62W38	HANDHOLE	HHF-03-11	1347+88	78' RT	1983418.03	1073966.90
62W38	HANDHOLE	HHF-03-12	1348+12	122' RT	1983440.94	1074011.95
62W38	HANDHOLE	HHF-03-10	1347+74	430' RT	1983384.86	1074317.66
62W38	HANDHOLE	HHF-03-06	1341+73	538' RT	1982671.33	1074309.28
62W38	HANDHOLE	HHF-03-07	1344+42	581' RT	1982977.44	1074422.80
62W38	HANDHOLE	HHF-03-08	1344+95	691' RT	1983023.81	1074542.00
62W38	HANDHOLE	HHF-03-09	1345+27	715' RT	1983059.98	1074571.70
62W38	CMV	CMV-03-15	1350+98	137' LT	1983722.78	1073749.76
62W38	CMV	CMV-03-16	1365+07	90' LT	1985108.12	1073578.42
62W38	CMV	CMV-03-17	1365+81	92' LT	1985180.76	1073564.18
62W38	HANDHOLE	HHF-03-13	1375+60	77' RT	1986174.23	1073568.65
62W38	HANDHOLE	HHF-03-14	1379+56	73' RT	1986563.24	1073499.72
62W38	HANDHOLE	HHF-03-15	1379+54	74' LT	1986538.77	1073354.75
62W38	CMV	CMV-03-18	1379+75	73' LT	1986559.95	1073352.52
62W38	CMV	CMV-03-19	1381+73	73' LT	1986758.75	1073326.03
62W38	CMV	CMV-03-20	1381+95	73' LT	1986780.89	1073323.51

NOTE: TRAFFIC SIGNAL DEVICES AND HANDHOLES ARE NOT INCLUDED IN THIS SCHEDULE. SEE TRAFFIC SIGNAL AND INTERCONNECT DRAWINGS FOR DETAILS.

ITS–03

MODEL: Default
FILE NAME: S:\JOL\6300-6399\6346\113Drawings\CADMicroSS4\CAD_Sheets\D162W38-dHF4TS-SOD402-1153-SAL.dgn

STRAND ASSOCIATES®
1170 SOUTH HOUBOLT ROAD
JOLIET, ILLINOIS 60431
(815) 744-4200

USER NAME = jaker	DESIGNED - RRS	REVISED -	
	DRAWN - JLN	REVISED -	
PLOT SCALE = 100.0000 ' / in.	CHECKED - BMS	REVISED -	
PLOT DATE = 8/26/2024	DATE - 8/23/2024	REVISED -	

STATE OF ILLINOIS
DEPARTMENT OF TRANSPORTATION

IL ROUTE 53
ITS SCHEDULE OF DEVICES

SCALE: | SHEET OF SHEETS | STA. TO STA.

F.A.P. RTE.	SECTION	COUNTY	TOTAL SHEETS	SHEET NO.
342	(531) BR 23	COOK	1211	604
		CONTRACT NO. 62W38		
	ILLINOIS	FED. AID PROJECT		

SUMMARY OF QUANTITIES

ITEM	UNIT	QUANTITY
ELECTRIC SERVICE INSTALLATION	EACH	6
ELECTRIC UTILITY SERVICE CONNECTION	L SUM	1
UNDERGROUND CONDUIT, GALVANIZED STEEL, 2" DIA.	FOOT	1,101
UNDERGROUND CONDUIT, GALVANIZED STEEL, 4" DIA.	FOOT	3,002
UNDERGROUND CONDUIT, COILABLE NONMETALLIC CONDUIT, 2" DIA.	FOOT	6,937
CONDUIT ATTACHED TO STRUCTURE, 6" DIA., GALVANIZED STEEL	FOOT	106
CONDUIT EMBEDDED IN STRUCTURE, 2" DIA., PVC	FOOT	783
CONDUIT EMBEDDED IN STRUCTURE, 4" DIA., PVC	FOOT	5,023
JUNCTION BOX, STAINLESS STEEL, ATTACHED TO STRUCTURE, 24" X 24" X 8"	EACH	8
HEAVY-DUTY HANDHOLE	EACH	23
ELECTRIC CABLE IN CONDUIT, 600V (XLP-TYPE USE) 1/C NO. 8	FOOT	7,552
ELECTRIC CABLE IN CONDUIT, 600V (XLP-TYPE USE) 1/C NO. 6	FOOT	16,205
ELECTRIC CABLE IN CONDUIT, 600V (XLP-TYPE USE) 1/C NO. 4	FOOT	412
ELECTRIC CABLE IN CONDUIT, 600V (XLP-TYPE USE) 1/C NO. 2	FOOT	1,347
REMOVAL OF ELECTRIC SERVICE INSTALLATION	EACH	6
CONCRETE FOUNDATION, TYPE A	FOOT	18
DRILL EXISTING HANDHOLE	EACH	7
REMOVE EXISTING HANDHOLE	EACH	39
REMOVE EXISTING CONCRETE FOUNDATION	EACH	17
CLOSED CIRCUIT TELEVISION DOME CAMERA, HD	EACH	8
CABINET, MODEL 334	EACH	8
CLOSED CIRCUIT TELEVISION CAMERA STRUCTURE, FOUNDATION, 80 FT. MOUNTING HEIGHT	FOOT	130
CLOSED CIRCUIT TELEVISION CAMERA STRUCTURE, GALVANIZED STEEL, 80 FT. MOUNTING HEIGHT	EACH	8
MAINTAINING ITS DURING CONSTRUCTION	CAL MO	21
REMOVAL OF CABLE IN CONDUIT	FOOT	20,100
WIRELESS VEHICLE DETECTION SYSTEM	EACH	8
TERMINATE FIBER IN CABINET	EACH	120
BLUETOOTH DETECTOR	EACH	37
LAYER III (NETWORK) SWITCH	EACH	8
INTERCEPT EXISTING CONDUIT	EACH	11
WOOD POLE, 25 FT, CLASS 4	EACH	25
FIBER OPTIC CABLE 24 FIBERS, SINGLE MODE	FOOT	309
FIBER OPTIC CABLE 12 FIBERS, SINGLE MODE	FOOT	1,414
FIBER OPTIC CABLE 144 FIBERS, SINGLE MODE	FOOT	47,590
FIBER OPTIC TERMINATION PANEL, 12 F OR 24F	EACH	8
FIBER OPTIC CABLE SPLICE - LATERAL	EACH	8
FIBER OPTIC CABLE SPLICE - MAINLINE	EACH	8
FIBER OPTIC UTILITY MARKER	EACH	33
FIBER OPTIC INNERDUCT 1 1/4" DIA.	FOOT	619
CONCRETE FOUNDATION, SURVEILLANCE CABINET MODEL 334	EACH	8
REMOVE EXISTING TRAFFIC SURVEILLANCE EQUIPMENT	L SUM	1
COMMUNICATIONS VAULT	EACH	30
MODIFY EXISTING DYNAMIC MESSAGE SIGN	EACH	1
CONDUIT ATTACHED TO STRUCTURE, RIGID NON-METALLIC, 6" DIA.	FOOT	319
JUNCTION BOX, NON-METALLIC, EMBEDDED IN STRUCTURE, 32" X 12" X 8"	EACH	8
UNDERGROUND CONDUIT, MULTI-DUCT, 4-18MM MICRODUCTS	FOOT	41,790

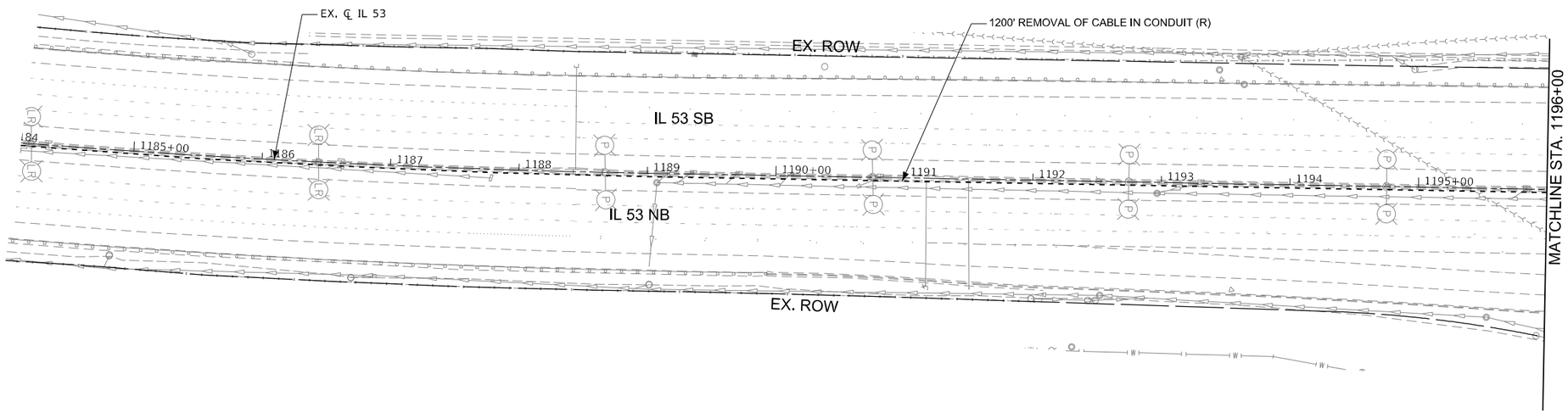

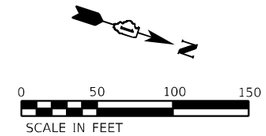

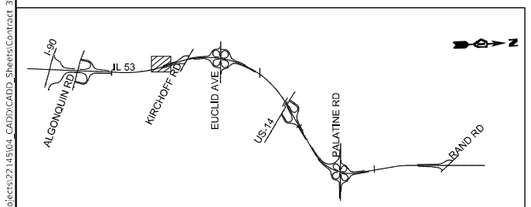

KEY MAP

ITS–05

MODEL: Default
FILE NAME: \\60\1\Projects\2214504_CADD\CADD_Sheets\Contract_3\0162W38-det-sht-its-11.dgn

SINGH
SINGH + ASSOCIATES, INC.
CONSULTING ENGINEERS

USER NAME = vnunez	DESIGNED - SG	REVISED -	
	DRAWN VN	REVISED -	
PLOT SCALE = 100.0000 ' / in.	CHECKED - RP	REVISED -	
PLOT DATE = 9/20/2024	DATE - 07/24/2024	REVISED -	

STATE OF ILLINOIS
DEPARTMENT OF TRANSPORTATION

IL ROUTE 53
ITS REMOVAL AND TEMPORARY ITS PLAN

SCALE: 1" = 50' | SHEET OF SHEETS | STA. TO STA.

F.A.P. RTE.	SECTION	COUNTY	TOTAL SHEETS	SHEET NO.
342	2018-100-BR	COOK	1211	606
		CONTRACT NO. 62W38		
		ILLINOIS	FED. AID PROJECT	

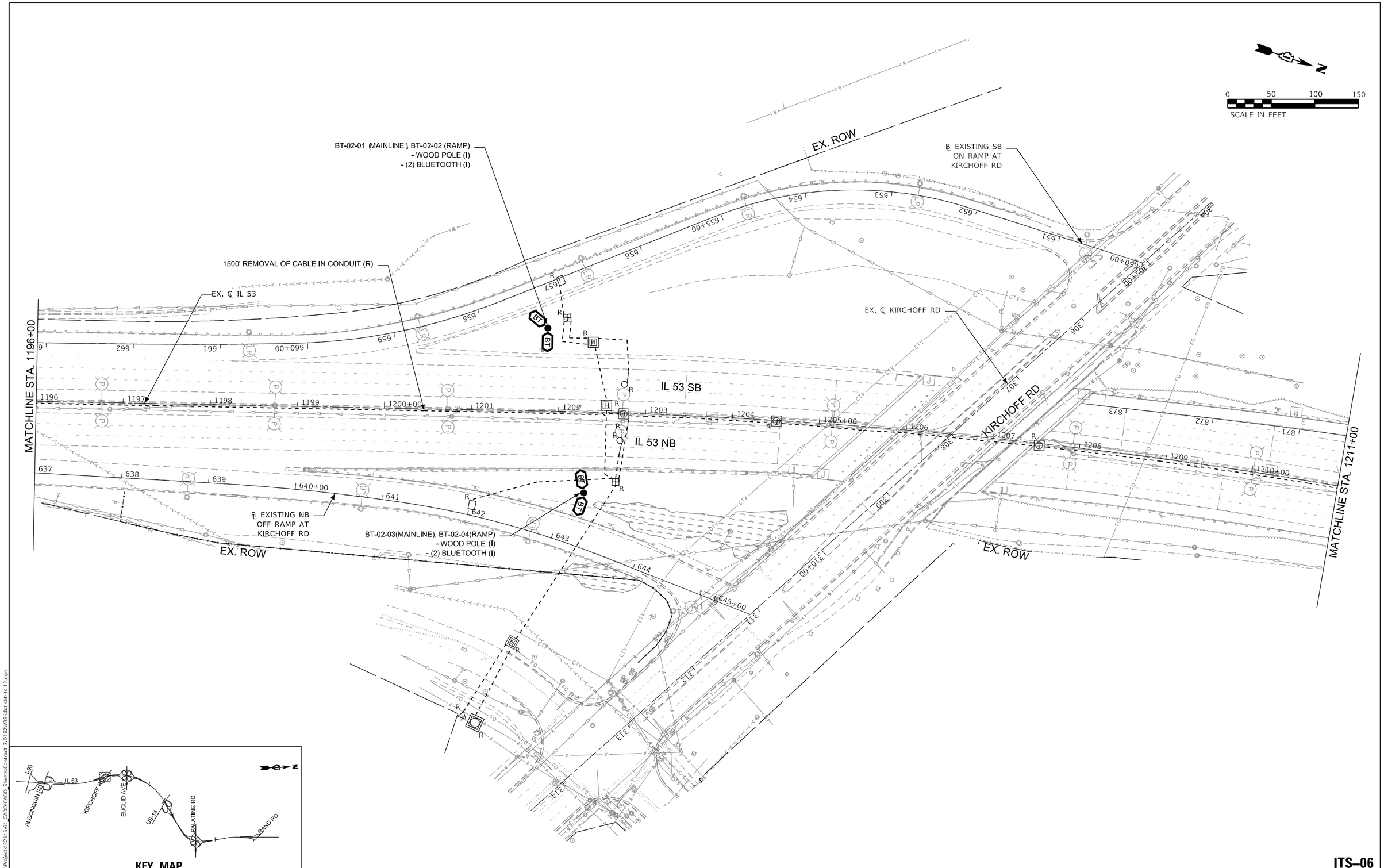

ITS–06

SINGH + ASSOCIATES, INC. CONSULTING ENGINEERS	USER NAME = mgonzalez	DESIGNED - SG	REVISED -	STATE OF ILLINOIS DEPARTMENT OF TRANSPORTATION	IL ROUTE 53 ITS REMOVAL AND TEMPORARY ITS PLAN	F.A.P. RTE. 342	SECTION 2018-100-BR
		DRAWN VN	REVISED -			COUNTY COOK	TOTAL SHEETS 1211 / SHEET NO. 607
	PLOT SCALE = 100.0000 ' / in.	CHECKED - RP	REVISED -			CONTRACT NO. 62W38	
	PLOT DATE = 8/23/2024	DATE - 07/24/2024	REVISED -		SCALE: 1" = 50' SHEET OF SHEETS STA. TO STA.	ILLINOIS FED. AID PROJECT	

MODEL: Default
FILE NAME: \\f601\Projects\22145\04_CADD\CADD_Sheets\Contract_30162W38-ddi-sht-its-12.dgn

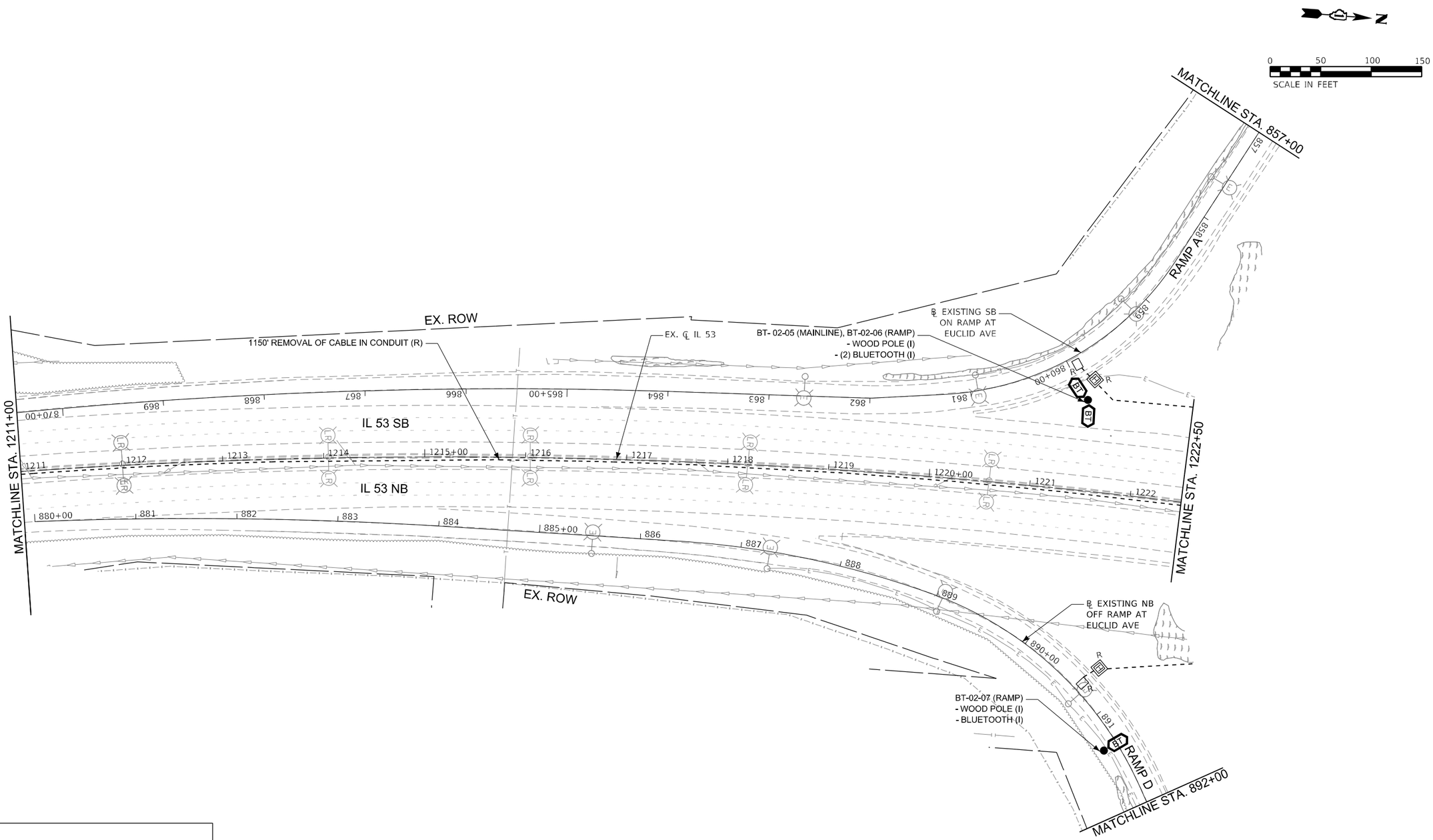

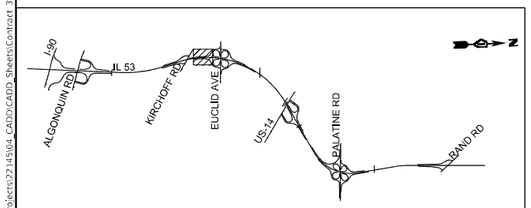

KEY MAP

ITS–07

MODEL: Default
FILE NAME: \\60\1\Projects\22145\04_CADD\CADD_Sheets\Contract_3\0162W38-def-sht-its-13.dgn

SINGH
SINGH + ASSOCIATES, INC.
CONSULTING ENGINEERS

USER NAME = mgonzalez	DESIGNED - SG	REVISED -	
	DRAWN VN	REVISED -	
PLOT SCALE = 100.0000 ' / in.	CHECKED - RP	REVISED -	
PLOT DATE = 8/23/2024	DATE - 07/24/2024	REVISED -	

STATE OF ILLINOIS
DEPARTMENT OF TRANSPORTATION

IL ROUTE 53
ITS REMOVAL AND TEMPORARY ITS PLAN

SCALE: 1" = 50' | SHEET OF SHEETS | STA. TO STA.

F.A.P. RTE.	SECTION	COUNTY	TOTAL SHEETS	SHEET NO.
342	2018-100-BR	COOK	1211	608
		CONTRACT NO. 62W38		
		ILLINOIS	FED. AID PROJECT	

MATCHLINE STA. 404+00

MATCHLINE STA. 857+00

MATCHLINE STA. 1222+50

MATCHLINE STA. 780+00

MATCHLINE STA. 412+50

MATCHLINE STA. 734+50

MATCHLINE STA. 1236+00

MATCHLINE STA. 794+50

RAMP A

RAMP E

RAMP E

RAMP B

EUCLID AVE

EX. ROW

IL 53 SB

IL 53 NB

EX. ℄ EUCLID AVE

EX. ℄ IL 53

℄ EXISTING SB ON RAMP AT EUCLID AVE

℄ EXISTING SB OFF RAMP AT EUCLID AVE

℄ EXISTING SB ON RAMP AT EUCLID AVE

℄ EXISTING SB OFF RAMP AT EUCLID AVE

BT-02-08 (RAMP)
- WOOD POLE (I)
- BLUETOOTH (I)

BT-02-09 (MAINLINE), BT-02-10 (RAMP)
- WOOD POLE (I)
- (2) BLUETOOTH (I)

BT-02-11 (RAMP)
- WOOD POLE (I)
- BLUETOOTH (I)

1350' REMOVAL OF CABLE IN CONDUIT (R)

0 50 100 150
SCALE IN FEET

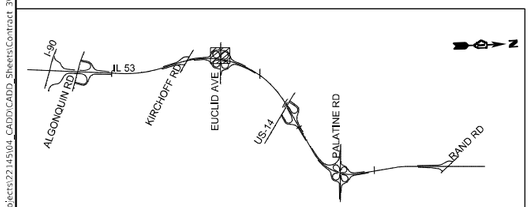

KEY MAP

ITS–08

MODEL: Default
FILE NAME: \\s01\Projects\22145\04_CADD\CADD_Sheets\Contract 3D\62W38-dot-pn-ts-14.dgn

SINGH + ASSOCIATES, INC.
CONSULTING ENGINEERS

USER NAME = mgonzalez	DESIGNED - SG	REVISED -	
	DRAWN VN	REVISED -	
PLOT SCALE = 100.0000 ' / in.	CHECKED - RP	REVISED -	
PLOT DATE = 8/23/2024	DATE - 07/24/2024	REVISED -	

STATE OF ILLINOIS
DEPARTMENT OF TRANSPORTATION

IL ROUTE 53
ITS REMOVAL AND TEMPORARY ITS PLAN

SCALE: 1" = 50' | SHEET OF SHEETS | STA. TO STA.

F.A.P. RTE.	SECTION	COUNTY	TOTAL SHEETS	SHEET NO.
342	2018-100-BR	COOK	1211	609

CONTRACT NO. 62W38

ILLINOIS FED. AID PROJECT

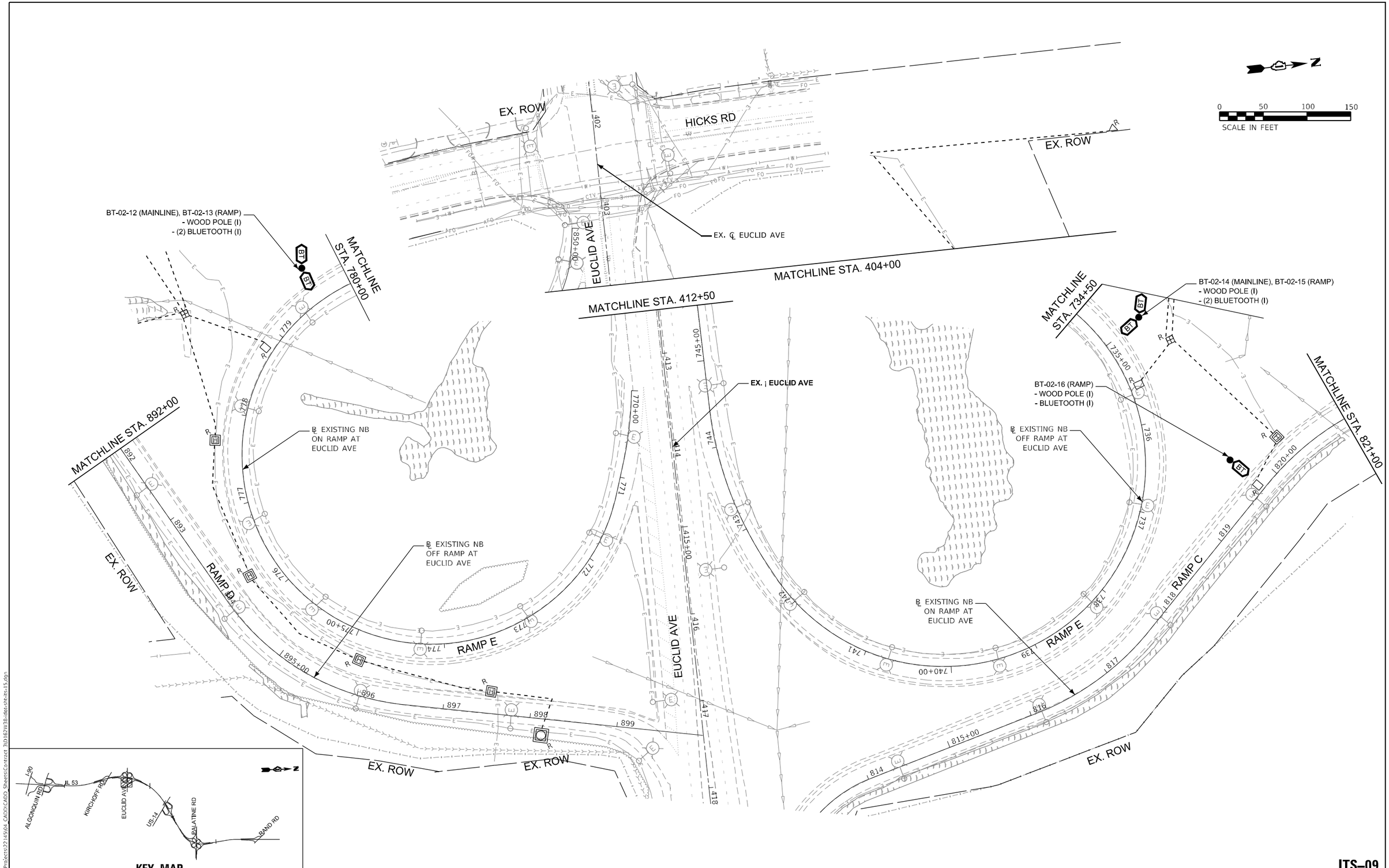

ITS–09

SINGH + ASSOCIATES, INC. CONSULTING ENGINEERS	USER NAME = mgonzalez	DESIGNED - SG	REVISED -	STATE OF ILLINOIS DEPARTMENT OF TRANSPORTATION	IL ROUTE 53 ITS REMOVAL AND TEMPORARY ITS PLAN	F.A.P. RTE.	SECTION	COUNTY	TOTAL SHEETS / SHEET NO.
		DRAWN VN	REVISED -			342	2018-100-BR	COOK	1211 / 610
	PLOT SCALE = 100.0010 ' / in.	CHECKED - RP	REVISED -					CONTRACT NO. 62W38	
	PLOT DATE = 8/23/2024	DATE - 07/24/2024	REVISED -		SCALE: 1" = 50' SHEET OF SHEETS STA. TO STA.			ILLINOIS FED. AID PROJECT	

MODEL: Default
FILE NAME: \\f601\Projects\22145\04-CADD\CADD_Sheets\Contract 3\D162W38-dot-sht-its-15.dgn

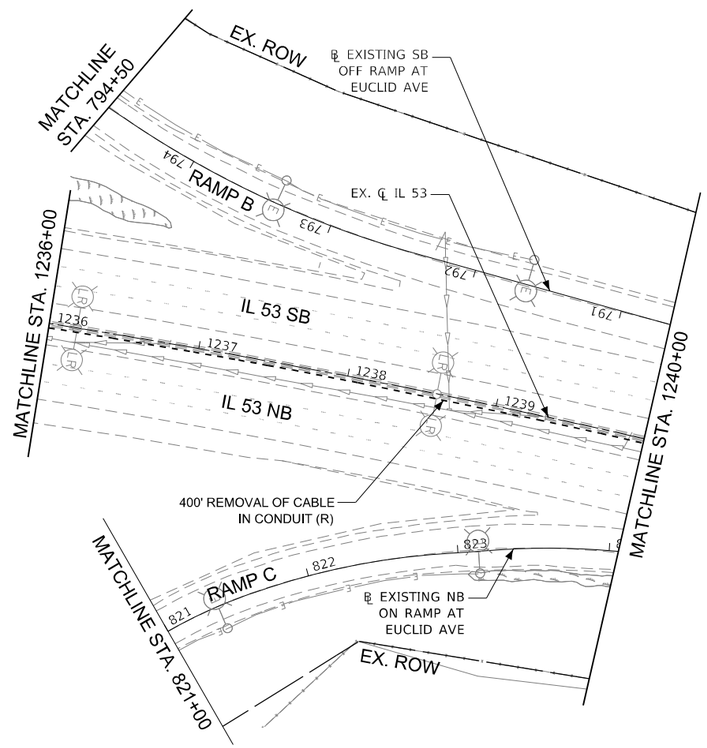

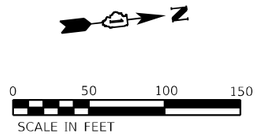

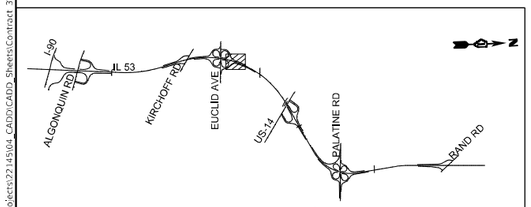

KEY MAP

ITS–10

NODEL: Default
FILE NAME: \\60\1\Projects\2214504_CADD\CADD_Sheets\Contract 3D162W38-det-ch-its-16.dgn

SINGH
SINGH + ASSOCIATES, INC.
CONSULTING ENGINEERS

USER NAME = mgonzalez	DESIGNED - SG	REVISED -	
	DRAWN VN	REVISED -	
PLOT SCALE = 100.0000 ' / in.	CHECKED - RP	REVISED -	
PLOT DATE = 8/23/2024	DATE - 07/24/2024	REVISED -	

STATE OF ILLINOIS
DEPARTMENT OF TRANSPORTATION

IL ROUTE 53
ITS REMOVAL AND TEMPORARY ITS PLAN

SCALE: 1" = 50' | SHEET OF SHEETS | STA. TO STA.

F.A.P. RTE.	SECTION	COUNTY	TOTAL SHEETS	SHEET NO.
342	2018-100-BR	COOK	1211	611
		CONTRACT NO. 62W38		
		ILLINOIS FED. AID PROJECT		

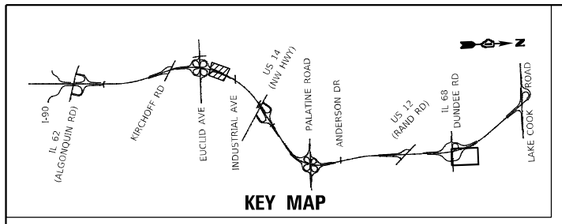

KEY MAP

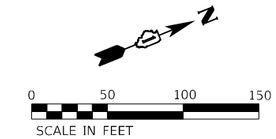

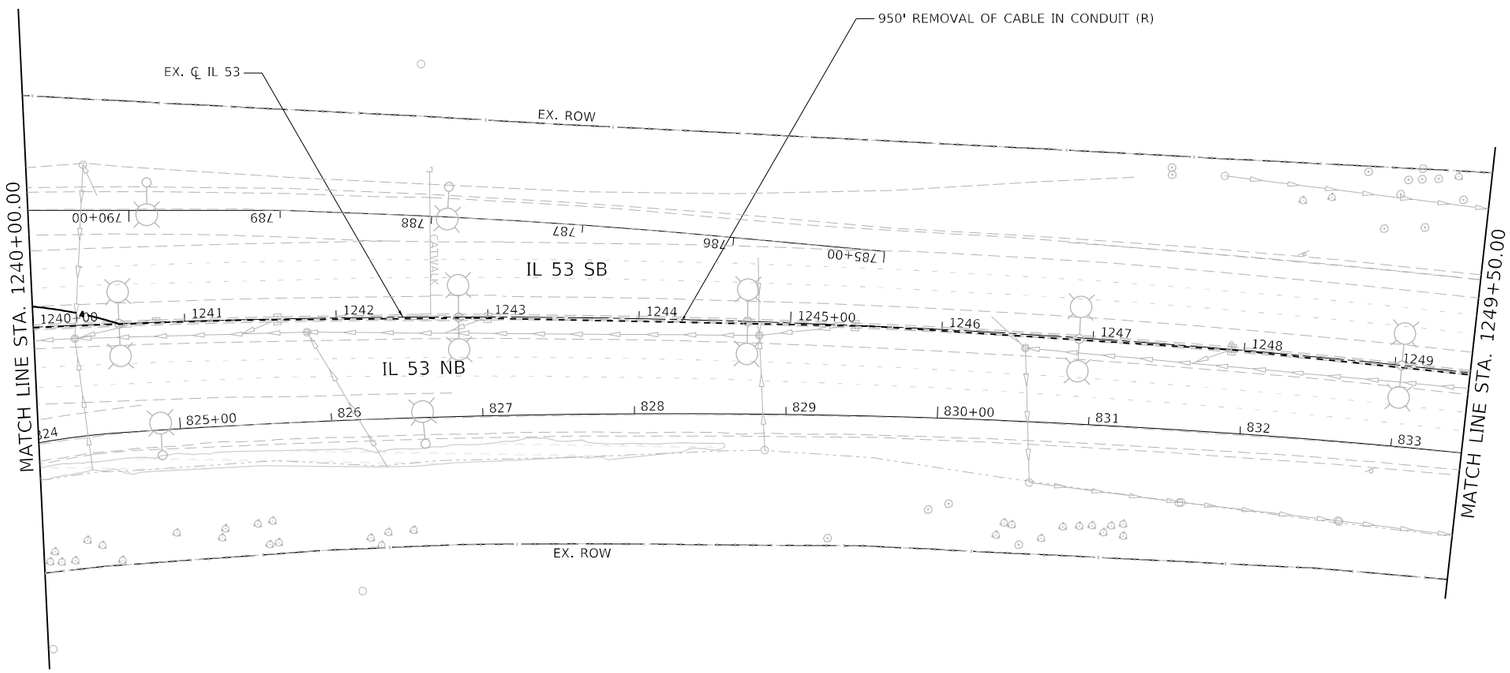

ITS–11

MODEL: Default
FILE NAME: S:\JOL\6300-6399\63461 13\Drawings\CADMicro-SSA\CAD_Sheets\D162W38-sht-ITS-removal-405-IL53-SAI.dgn

STRAND ASSOCIATES® 1170 SOUTH HOUBOLT ROAD JOLIET, ILLINOIS 60431 (815) 744-4200	USER NAME = jaker	DESIGNED - RRS	REVISED -	STATE OF ILLINOIS DEPARTMENT OF TRANSPORTATION	IL ROUTE 53 ITS REMOVAL AND TEMPORARY ITS PLAN	F.A.P. RTE.	SECTION	COUNTY	TOTAL SHEETS / SHEET NO.
		DRAWN - JLN	REVISED -			342	(531) BR 23	COOK	1211 / 612
	PLOT SCALE = 100.0000 ' / in.	CHECKED - BMS	REVISED -					CONTRACT NO. 62W38	
	PLOT DATE = 8/26/2024	DATE - 8/23/2024	REVISED -		SCALE: 1" = 50' SHEET 7 OF 19 SHEETS STA. 1236+50.00 TO STA. 1249+50.00		ILLINOIS	FED. AID PROJECT	

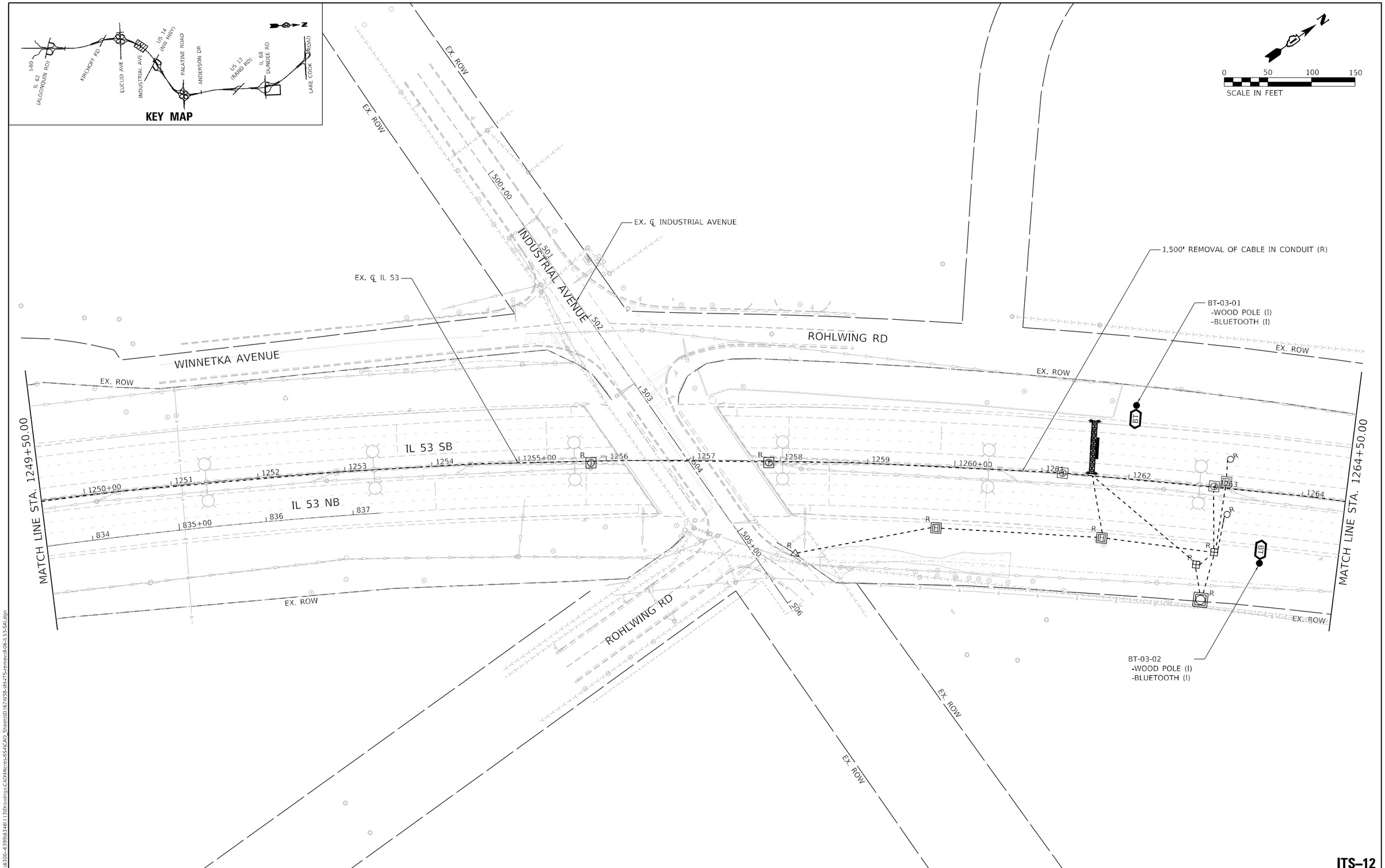

ITS–12

MODEL: Default
FILE NAME: S:\JOL\6300-6399\6346\13\Drawings\CADd\Micro-SS4\CAD_Sheets\D 62W38-dIH-ITS-removal-Ind-IL 53-SA1.dgn

STRAND ASSOCIATES
1170 SOUTH HOUBOLT ROAD
JOLIET, ILLINOIS 60431
(815) 744-4200

USER NAME = jaker	DESIGNED - RRS	REVISED -	
	DRAWN - JLN	REVISED -	
PLOT SCALE = 100.0000 ' / in.	CHECKED - BMS	REVISED -	
PLOT DATE = 8/26/2024	DATE - 8/23/2024	REVISED -	

STATE OF ILLINOIS
DEPARTMENT OF TRANSPORTATION

IL ROUTE 53
ITS REMOVAL AND TEMPORARY ITS PLAN

SCALE: 1" = 50' | SHEET 8 OF 19 SHEETS | STA. 1249+50.00 TO STA. 1264+50.00

F.A.P. RTE.	SECTION	COUNTY	TOTAL SHEETS	SHEET NO.
342	(531) BR 23	COOK	1211	613

CONTRACT NO. 62W38

ILLINOIS | FED. AID PROJECT

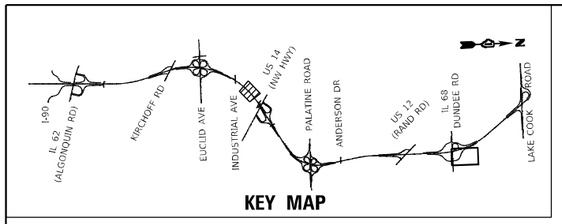

KEY MAP

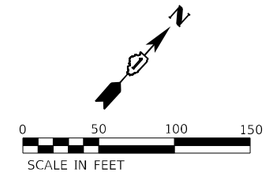

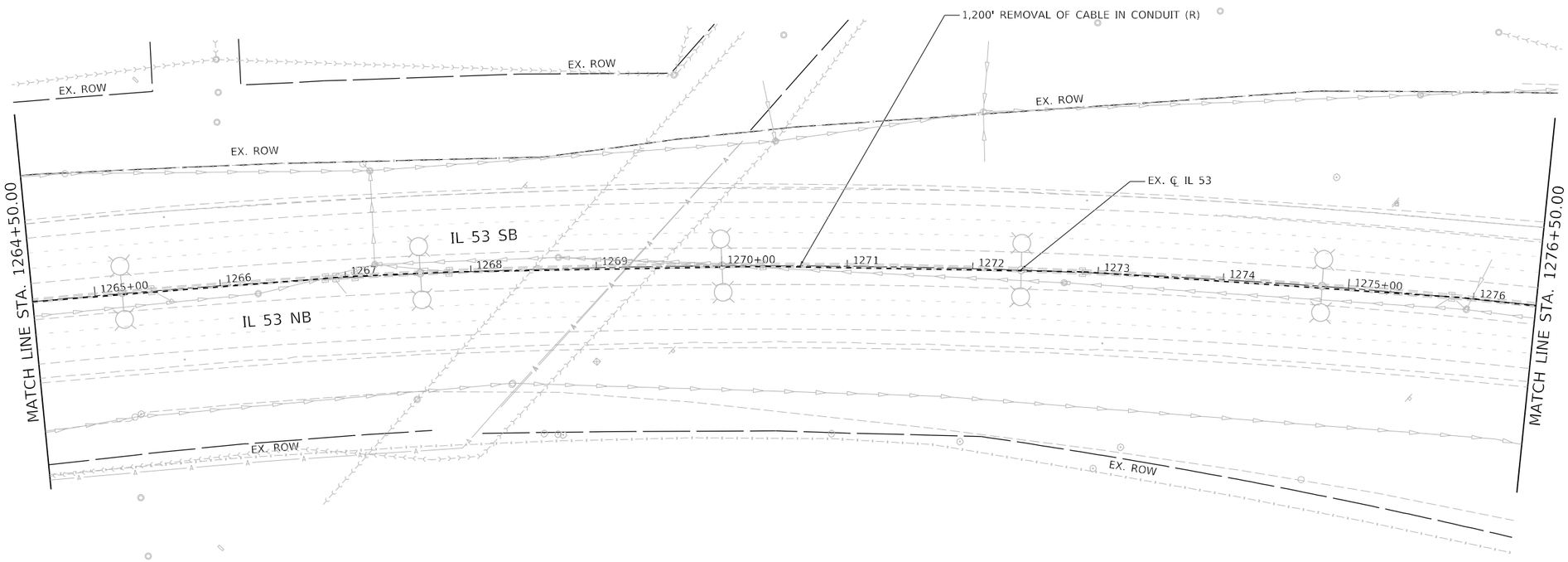

ITS–13

MODEL: Default
FILE NAME: S:\OL\6300-6399\6346\13\Drawings\CAD\Micro-SS4\CAD_Sheets\D162W38-ditsITS-removal-07-IL53-S4.dgn

STRAND ASSOCIATES® 1170 SOUTH HOUBOLT ROAD JOLIET, ILLINOIS 60431 (815) 744-4200	USER NAME = jaker	DESIGNED - RRS	REVISED -	STATE OF ILLINOIS DEPARTMENT OF TRANSPORTATION	IL ROUTE 53 ITS REMOVAL AND TEMPORARY ITS PLAN	F.A.P. RTE.	SECTION	COUNTY	TOTAL SHEETS	SHEET NO.
		DRAWN - JLN	REVISED -			342	(531) BR 23	COOK	1211	614
	PLOT SCALE = 100.0000 ' / in.	CHECKED - BMS	REVISED -					CONTRACT NO. 62W38		
	PLOT DATE = 8/26/2024	DATE - 8/23/2024	REVISED -		SCALE: 1" = 50' SHEET 9 OF 19 SHEETS STA. 1264+50.00 TO STA. 1276+50.00		ILLINOIS	FED. AID PROJECT		

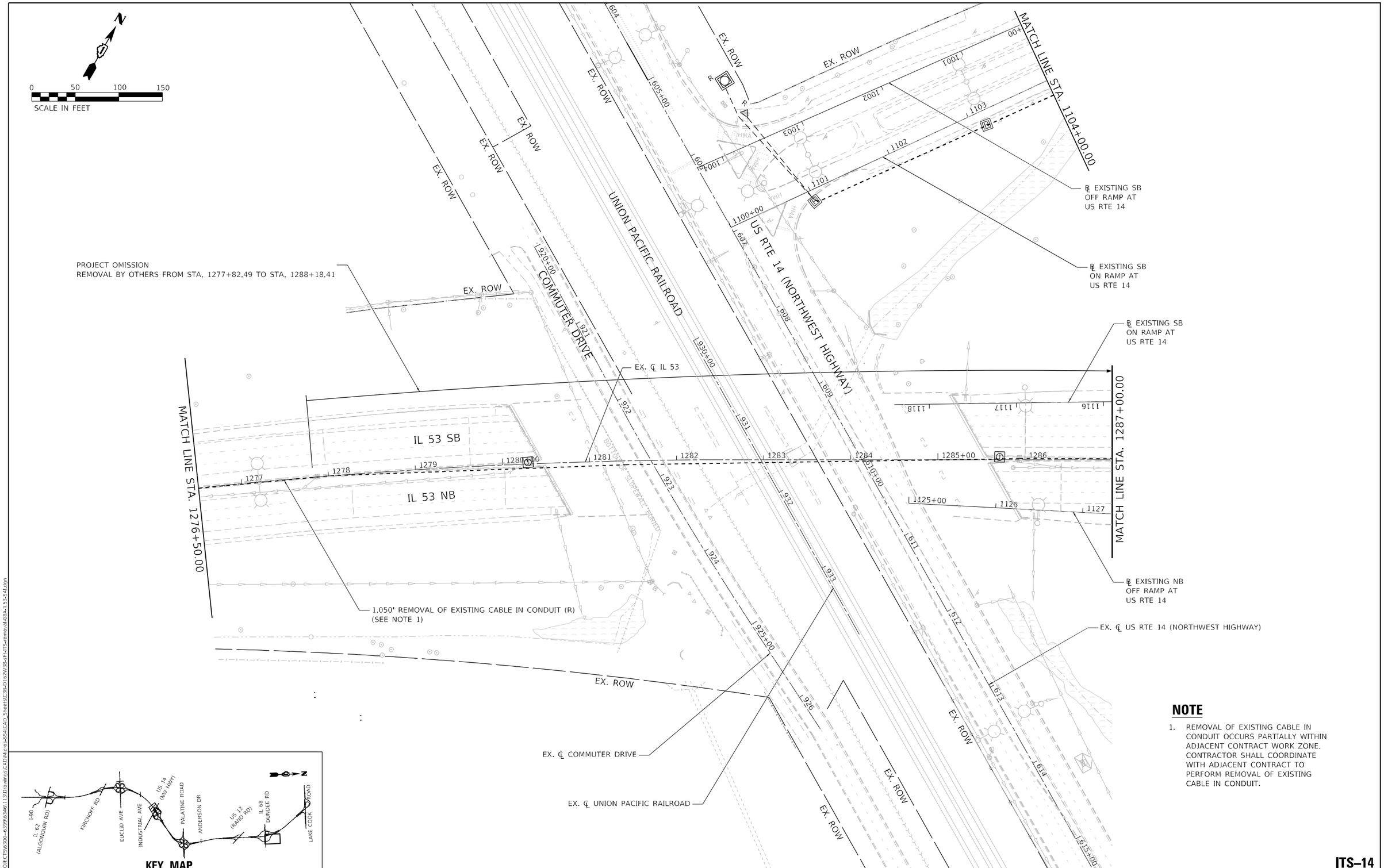

NOTE

1. REMOVAL OF EXISTING CABLE IN CONDUIT OCCURS PARTIALLY WITHIN ADJACENT CONTRACT WORK ZONE. CONTRACTOR SHALL COORDINATE WITH ADJACENT CONTRACT TO PERFORM REMOVAL OF EXISTING CABLE IN CONDUIT.

ITS–14

MODEL: Default
FILE NAME: G:\PROJECTS\6300-6399\6346\130\Drawings\CADMicro-SS4\CAD_Sheets\C3B-D162W38-ITS-removal009-IL53-SAL.dgn

STRAND ASSOCIATES®
1170 SOUTH HOUBOLT ROAD
JOLIET, ILLINOIS 60431
(815) 744-4200

USER NAME = jaker	DESIGNED - RRS	REVISED -	
	DRAWN - JLN	REVISED -	
PLOT SCALE = 100.0000 ' / in.	CHECKED - BMS	REVISED -	
PLOT DATE = 9/19/2024	DATE - 8/23/2024	REVISED -	

STATE OF ILLINOIS
DEPARTMENT OF TRANSPORTATION

IL ROUTE 53
ITS REMOVAL AND TEMPORARY ITS PLAN

SCALE: 1" = 50' | SHEET 10 OF 19 SHEETS | STA. 1276+50.00 TO STA. 1287+00.00

F.A.P. RTE.	SECTION	COUNTY	TOTAL SHEETS	SHEET NO.
342	(531) BR 23	COOK	1211	615

CONTRACT NO. 62W38
ILLINOIS | FED. AID PROJECT

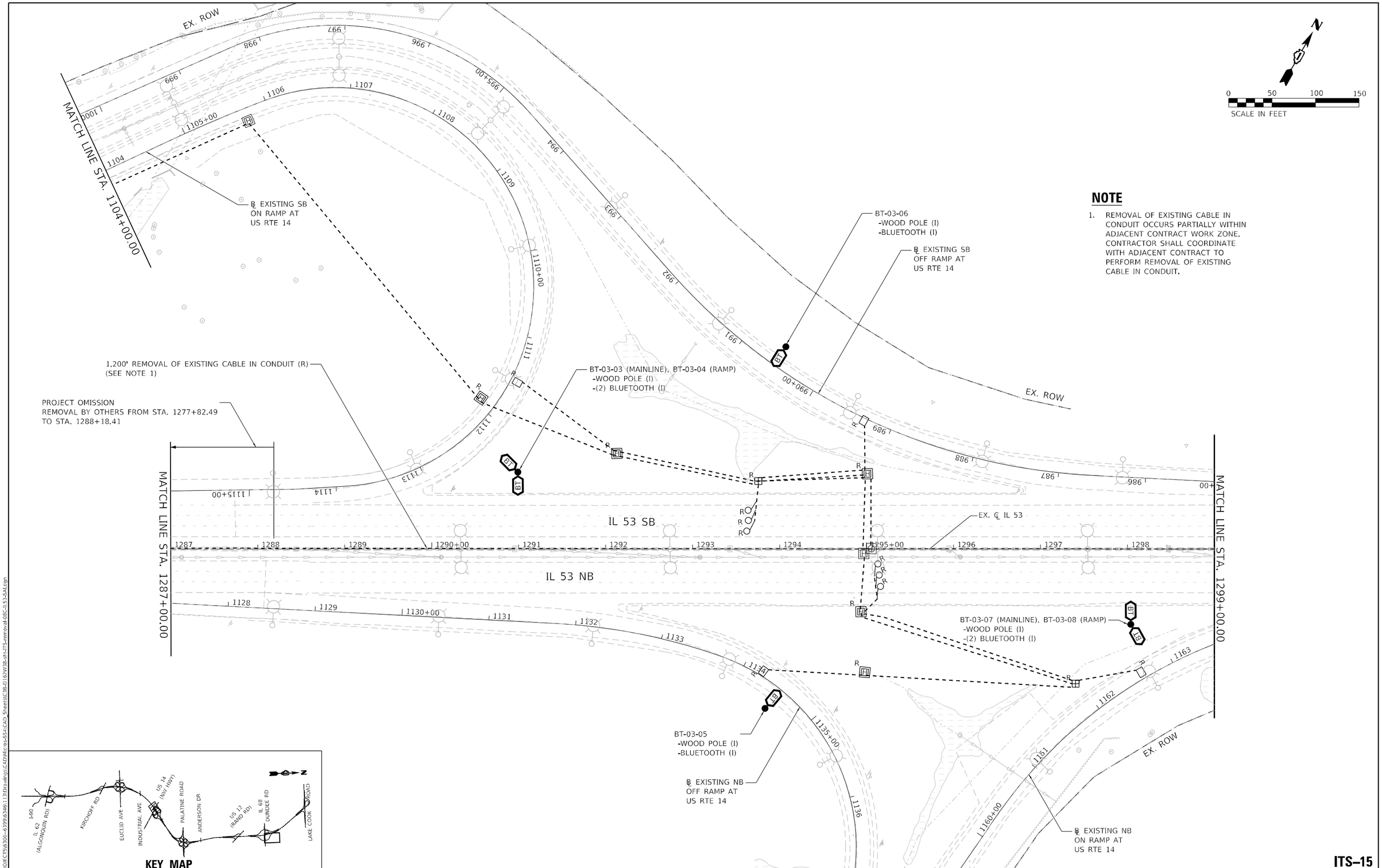

NOTE

1. REMOVAL OF EXISTING CABLE IN CONDUIT OCCURS PARTIALLY WITHIN ADJACENT CONTRACT WORK ZONE. CONTRACTOR SHALL COORDINATE WITH ADJACENT CONTRACT TO PERFORM REMOVAL OF EXISTING CABLE IN CONDUIT.

KEY MAP

ITS–15

MODEL: Default
FILE NAME: G:\PROJECTS\6300-6399\6346\13\Drawings\CADMicroSS4\CAD_Sheets\C3B-D162W38-sht-ITS-removal-08C-IL53-SAI.dgn

STRAND ASSOCIATES®
1170 SOUTH HOUBOLT ROAD
JOLIET, ILLINOIS 60431
(815) 744-4200

USER NAME = jaker	DESIGNED - RRS	REVISED -	
	DRAWN - JLN	REVISED -	
PLOT SCALE = 100.0000 ' / in.	CHECKED - BMS	REVISED -	
PLOT DATE = 9/19/2024	DATE - 8/23/2024	REVISED -	

STATE OF ILLINOIS
DEPARTMENT OF TRANSPORTATION

IL ROUTE 53
ITS REMOVAL AND TEMPORARY ITS PLAN

SCALE: 1" = 50' | SHEET 11 OF 19 SHEETS | STA. 1287+00.00 TO STA. 1299+00.00

F.A.P. RTE.	SECTION	COUNTY	TOTAL SHEETS	SHEET NO.
342	(531) BR 23	COOK	1211	616

CONTRACT NO. 62W38

ILLINOIS | FED. AID PROJECT

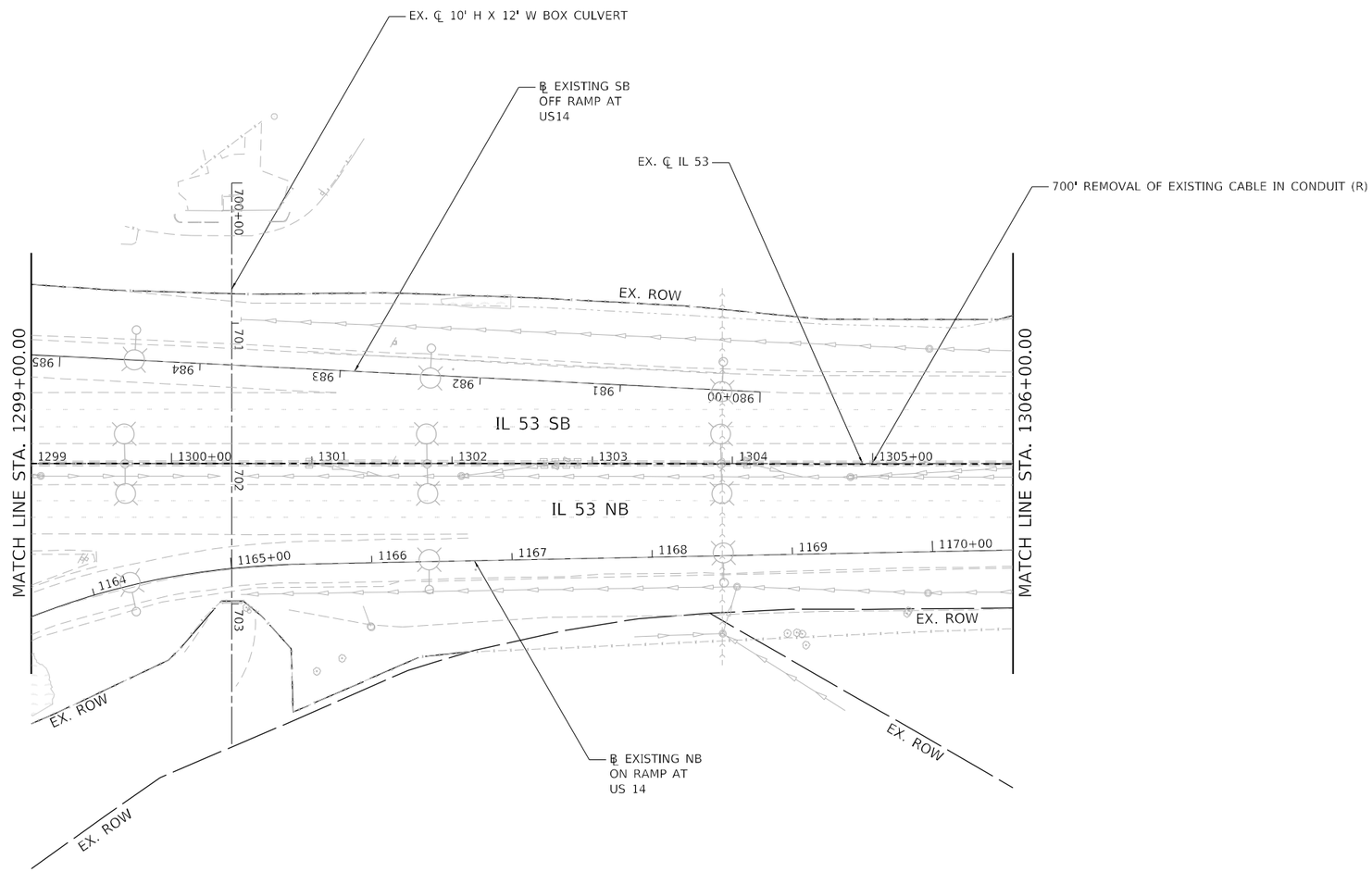

0 50 100 150
SCALE IN FEET

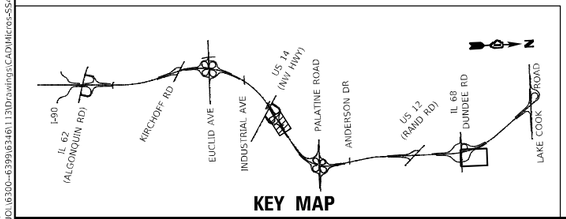

KEY MAP

ITS–16

MODEL: Default
FILE NAME: S:\JOB\6300-6399\6346\13\Drawings\CAD\Micro-SS\ITCAD_Sheets\D162V38-IPI-ITS-removal-09-IL53-SA1.dgn

STRAND ASSOCIATES®
1170 SOUTH HOUBOLT ROAD
JOLIET, ILLINOIS 60431
(815) 744-4200

USER NAME = jaker	DESIGNED - RRS	REVISED -	
	DRAWN - JLN	REVISED -	
PLOT SCALE = 100.0000 ' / in.	CHECKED - BMS	REVISED -	
PLOT DATE = 8/26/2024	DATE - 8/23/2024	REVISED -	

STATE OF ILLINOIS
DEPARTMENT OF TRANSPORTATION

IL ROUTE 53
ITS REMOVAL AND TEMPORARY ITS PLAN

SCALE: 1" = 50' | SHEET 12 OF 19 SHEETS | STA. 1291+00.00 TO STA. 1306+00.00

F.A.P. RTE.	SECTION	COUNTY	TOTAL SHEETS	SHEET NO.
342	(531) BR 23	COOK	1211	617
		CONTRACT NO. 62W38		
		ILLINOIS	FED. AID PROJECT	

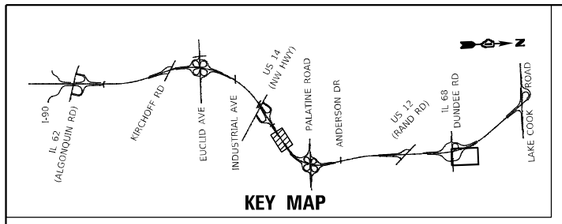

KEY MAP

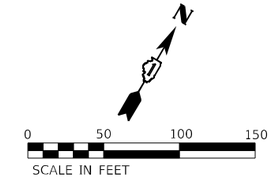

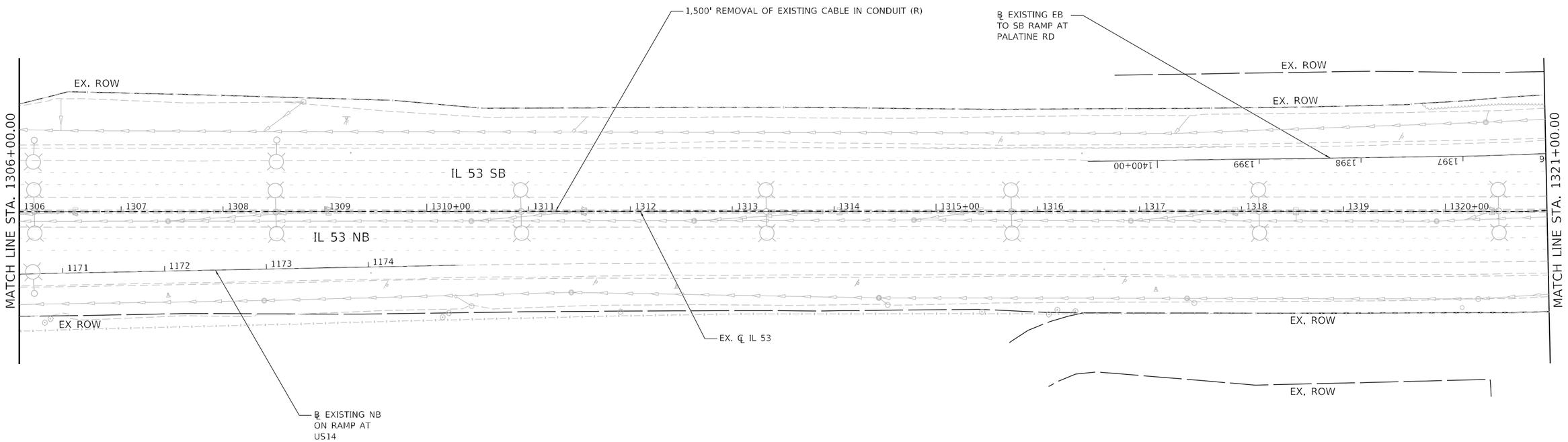

ITS–17

STRAND ASSOCIATES®
1170 SOUTH HOUBOLT ROAD
JOLIET, ILLINOIS 60431
(815) 744-4200

USER NAME = jaker	DESIGNED - RRS	REVISED -	
	DRAWN - JLN	REVISED -	
PLOT SCALE = 100.0000 ' / in.	CHECKED - BMS	REVISED -	
PLOT DATE = 8/26/2024	DATE - 8/23/2024	REVISED -	

STATE OF ILLINOIS
DEPARTMENT OF TRANSPORTATION

IL ROUTE 53
ITS REMOVAL AND TEMPORARY ITS PLAN

SCALE: 1" = 50' | SHEET 13 OF 19 SHEETS | STA. 1306+00.00 TO STA. 1321+00.00

F.A.P. RTE.	SECTION	COUNTY	TOTAL SHEETS	SHEET NO.
342	(531) BR 23	COOK	1211	618
		CONTRACT NO. 62W38		
		ILLINOIS	FED. AID PROJECT	

MODEL: Default
FILE NAME: S:\JOB\6300-6399\6346\13\Drawings\CADD\Micro-SS\ACAD_Sheets\D162V38-IPI-ITS-removal-10-IL53-SA1.dgn

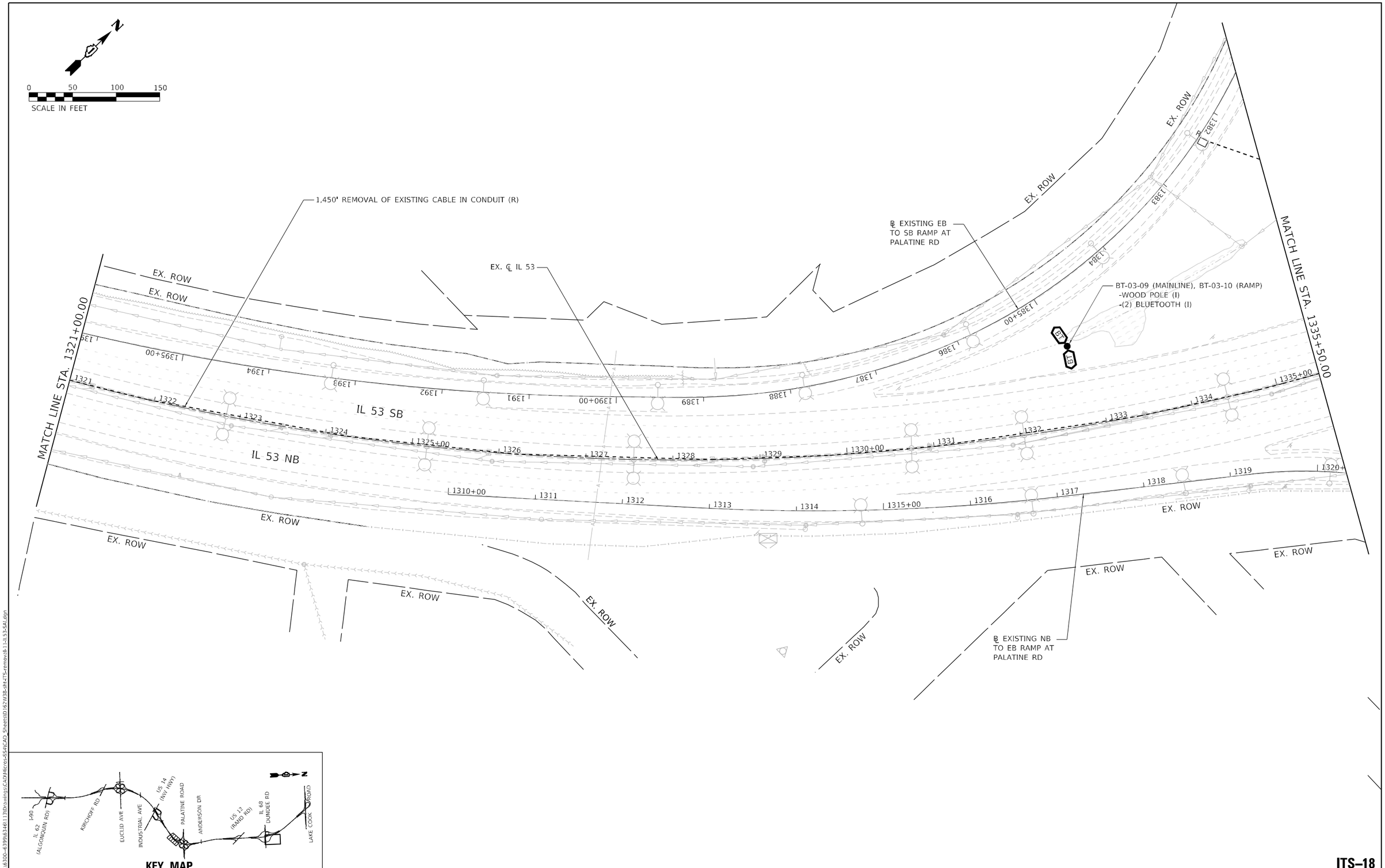

KEY MAP

ITS–18

MODEL: Default
FILE NAME: S:\JOL\06300-63991634611\3D\Drawings\CAD\Micro-SS4\CAD_Sheets\D162V38-IH4TS-removal-IL53-SA.dgn

STRAND ASSOCIATES®
1170 SOUTH HOUBOLT ROAD
JOLIET, ILLINOIS 60431
(815) 744-4200

USER NAME = jaker	DESIGNED - RRS	REVISED -	
	DRAWN - JLN	REVISED -	
PLOT SCALE = 100.0000 ' / in.	CHECKED - BMS	REVISED -	
PLOT DATE = 8/26/2024	DATE - 8/23/2024	REVISED -	

STATE OF ILLINOIS
DEPARTMENT OF TRANSPORTATION

IL ROUTE 53
ITS REMOVAL AND TEMPORARY ITS PLAN

SCALE: 1" = 50' | SHEET 14 OF 19 SHEETS | STA. 1321+00.00 TO STA. 1335+50.00

F.A.P. RTE.	SECTION	COUNTY	TOTAL SHEETS	SHEET NO.
342	(531) BR 23	COOK	1211	619
		CONTRACT NO. 62W38		
		ILLINOIS	FED. AID PROJECT	

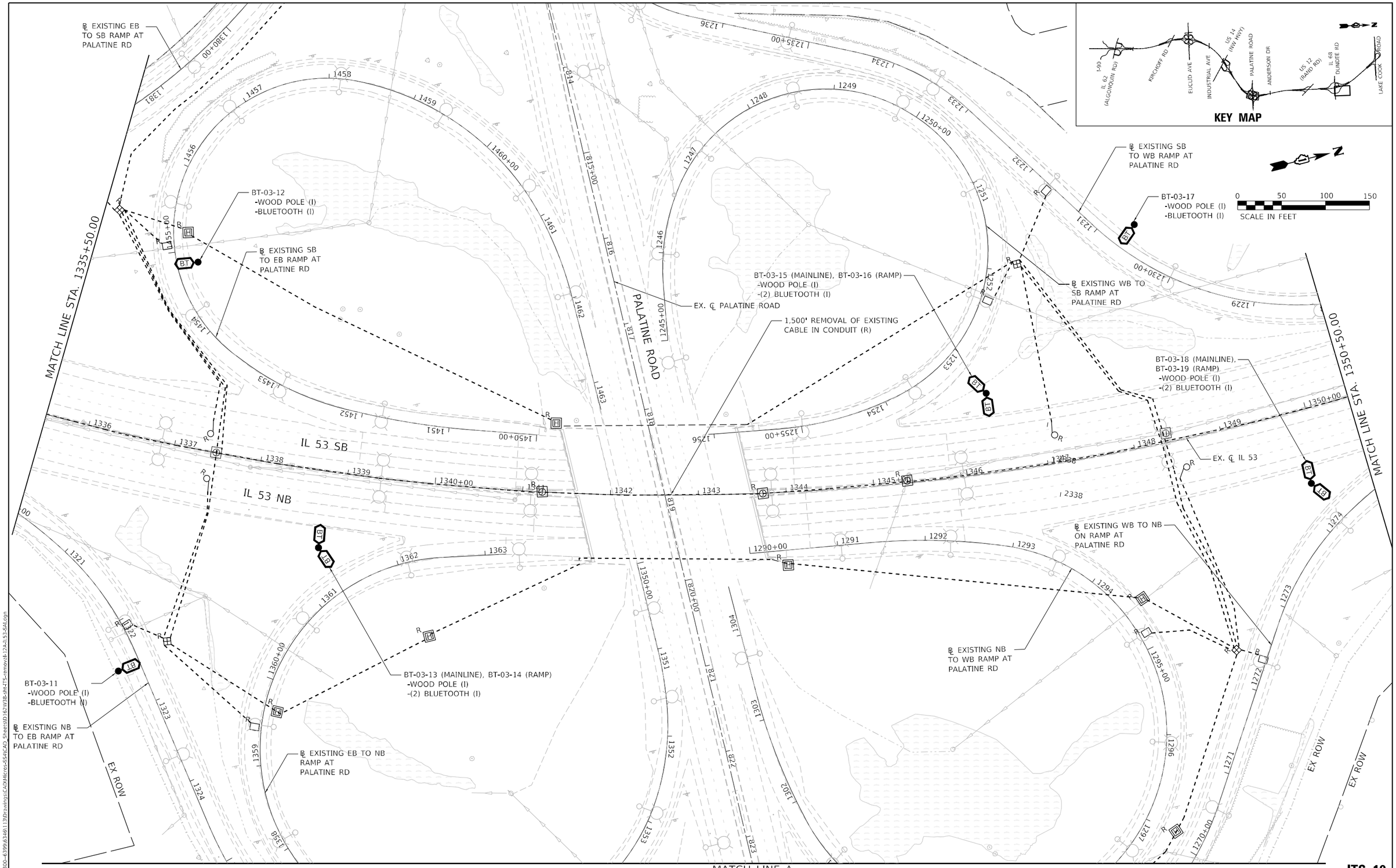

ITS–19

STRAND ASSOCIATES 1170 SOUTH HOUBOLT ROAD JOLIET, ILLINOIS 60431 (815) 744-4200	USER NAME = jaker	DESIGNED - RRS	REVISED -	STATE OF ILLINOIS DEPARTMENT OF TRANSPORTATION	IL ROUTE 53 ITS REMOVAL AND TEMPORARY PLAN	F.A.P. RTE.	SECTION	COUNTY	TOTAL SHEETS / SHEET NO.
		DRAWN - JLN	REVISED -			342	(531) BR 23	COOK	1211 / 620
	PLOT SCALE = 100.0000 ' / in.	CHECKED - BMS	REVISED -					CONTRACT NO. 62W38	
	PLOT DATE = 8/26/2024	DATE - 8/23/2024	REVISED -		SCALE: 1" = 50' SHEET 15 OF 19 SHEETS STA. 1335+50.00 TO STA. 1350+50.00		ILLINOIS	FED. AID PROJECT	

MODEL: Default
FILE NAME: S:\DOI\6300-6399\6346113\Drawings\CADMicro-SS4\CAD_Sheets\D162W38-sht-ITS-removal-12A-I53-SA.dgn

℄ EXISTING EB TO NB RAMP AT PALATINE RD

℄ EXISTING NB TO WB RAMP AT PALATINE RD

℄ EXISTING WB TO NB RAMP AT PALATINE RD

MATCH LINE A

EX. ROW

EX. ROW

EX. ROW

℄ EXISTING NB TO EB RAMP AT PALATINE RD

EX. ℄ PALATINE ROAD

YALE AVENUE

1325+00 1326 1327 1328 1329 1330+00 1331 1332 1333 1334 1335+00 1336 1337

1355+00 1356 1357 1354

1300+00 1299 1298 1269 1268 1267 1266 1265+00 1264 1263 1262 1261 0+00

824 825+00 826 827 828 829 830+00 831

R R R R

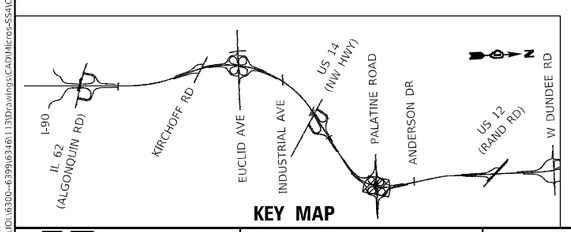

KEY MAP

ITS–20

MODEL: Default
FILE NAME: S:\DOT\6300-639\63461130\Drawings\CADD\Micro-SSA\CAD_Sheets\D162W38-ITS-removal-128-IL53-SA.dgn

STRAND ASSOCIATES 1170 SOUTH HOUBOLT ROAD JOLIET, ILLINOIS 60431 (815) 744-4200	USER NAME = jaker	DESIGNED - RRS	REVISED -	STATE OF ILLINOIS DEPARTMENT OF TRANSPORTATION	IL ROUTE 53 ITS REMOVAL AND TEMPORARY ITS PLAN	F.A.P. RTE.	SECTION	COUNTY	TOTAL SHEETS	SHEET NO.
		DRAWN - JLN	REVISED -			342	(531) BR 23	COOK	1211	621
	PLOT SCALE = 100.0000 ' / in.	CHECKED - BMS	REVISED -					CONTRACT NO. 62W38		
	PLOT DATE = 8/26/2024	DATE - 8/23/2024	REVISED -		SCALE: 1" = 50' SHEET 16 OF 19 SHEETS STA. 1335+50.00 TO STA. 1350+50.00		ILLINOIS	FED. AID PROJECT		

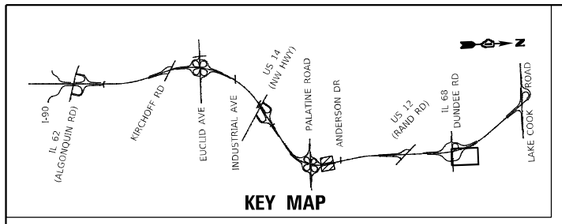

KEY MAP

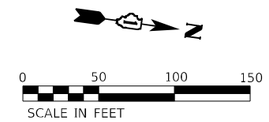

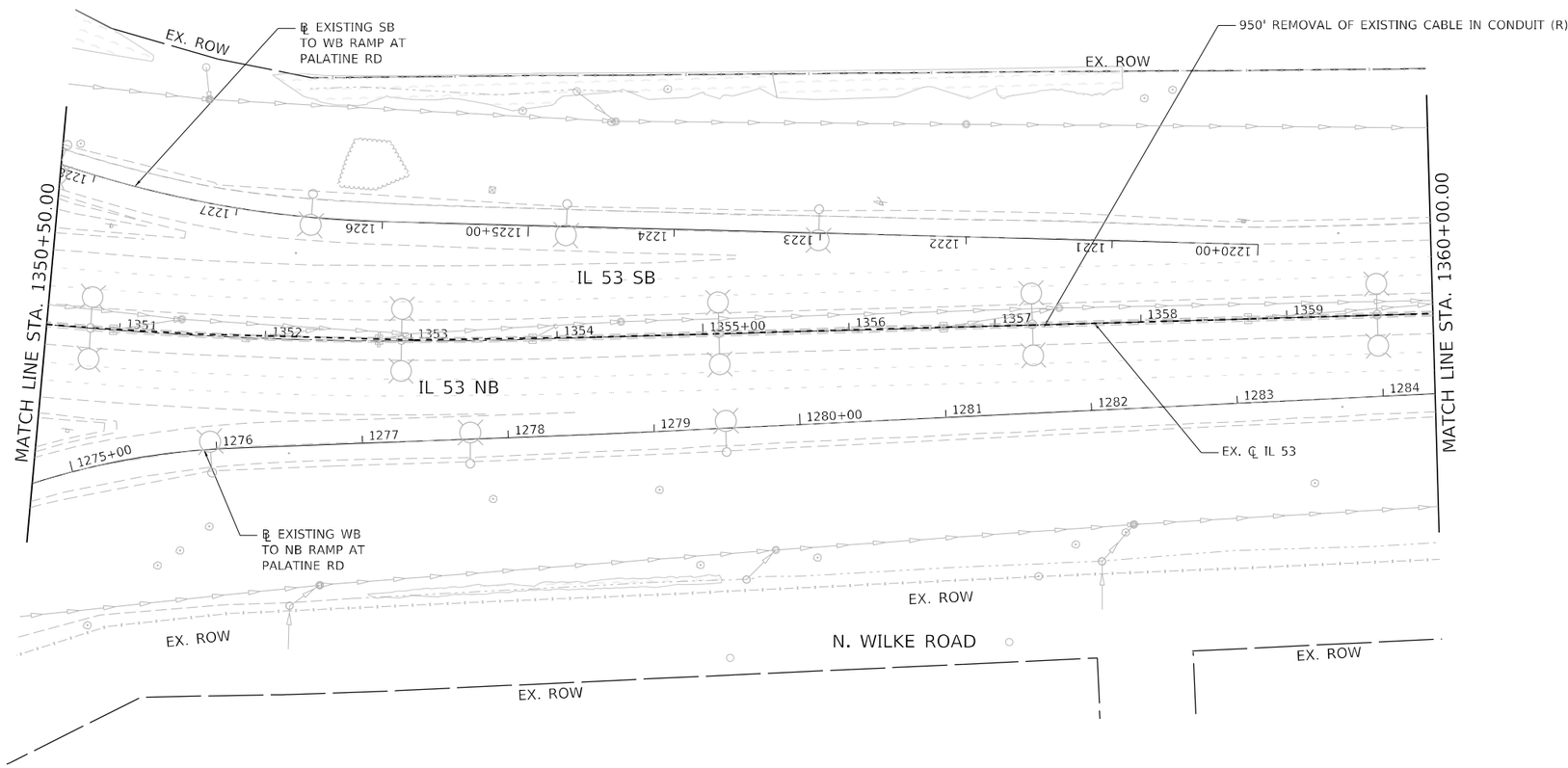

ITS–21

MODEL: Default
FILE NAME: S:\JOB\6300-6399\6346\113\Drawings\CAD\Micro-SS\ITS\CAD_Sheets\D162W38-PH-ITS-removal-I53-SA1.dgn

STRAND ASSOCIATES® 1170 SOUTH HOUBOLT ROAD JOLIET, ILLINOIS 60431 (815) 744-4200	USER NAME = jaker	DESIGNED - RRS	REVISED -	STATE OF ILLINOIS DEPARTMENT OF TRANSPORTATION	IL ROUTE 53 ITS REMOVAL AND TEMPORARY ITS PLAN
		DRAWN - JLN	REVISED -		
	PLOT SCALE = 100.0000 ' / in.	CHECKED - BMS	REVISED -		
	PLOT DATE = 8/26/2024	DATE - 8/23/2024	REVISED -		SCALE: 1" = 50' SHEET 17 OF 19 SHEETS STA. 1350+50.00 TO STA. 1360+00.00

F.A.P. RTE.	SECTION	COUNTY	TOTAL SHEETS	SHEET NO.
342	(531) BR 23	COOK	1211	622
		CONTRACT NO. 62W38		
		ILLINOIS	FED. AID PROJECT	

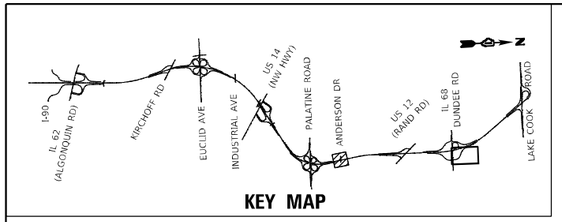

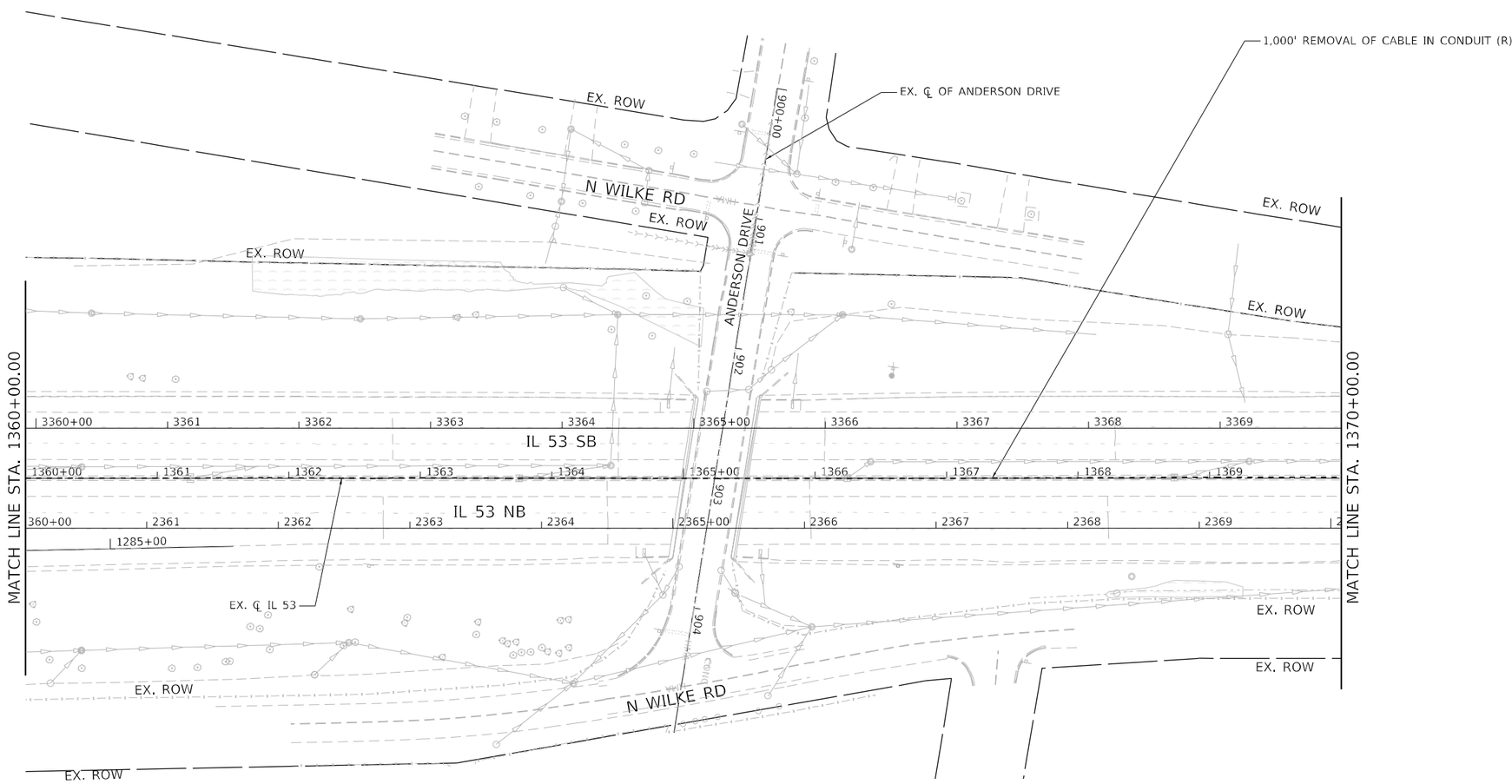

ITS–22

MODEL: Default
FILE NAME: S:\DL\6300-6399\6346113\Drawings\CADMicro-SSA\CAD_Sheets\D162W38-sht-ITS-removal-14-IL53-SAI.dgn

STRAND ASSOCIATES® 1170 SOUTH HOUBOLT ROAD JOLIET, ILLINOIS 60431 (815) 744-4200	USER NAME = jaker	DESIGNED - RRS	REVISED -	STATE OF ILLINOIS DEPARTMENT OF TRANSPORTATION	IL ROUTE 53 ITS REMOVAL AND TEMPORARY ITS PLAN	F.A.P. RTE.	SECTION	COUNTY	TOTAL SHEETS / SHEET NO.
		DRAWN - JLN	REVISED -			342	(531) BR 23	COOK	1211 / 623
	PLOT SCALE = 100.0000 ' / in.	CHECKED - BMS	REVISED -					CONTRACT NO. 62W38	
	PLOT DATE = 8/26/2024	DATE - 8/23/2024	REVISED -		SCALE: 1" = 50' SHEET 18 OF 19 SHEETS STA. 1360+00.00 TO STA. 1370+00.00			ILLINOIS FED. AID PROJECT	

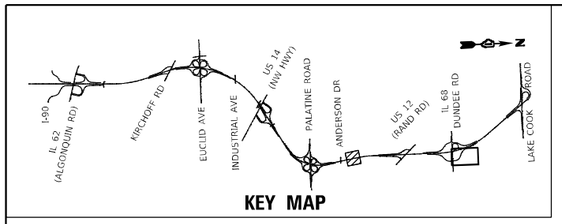

KEY MAP

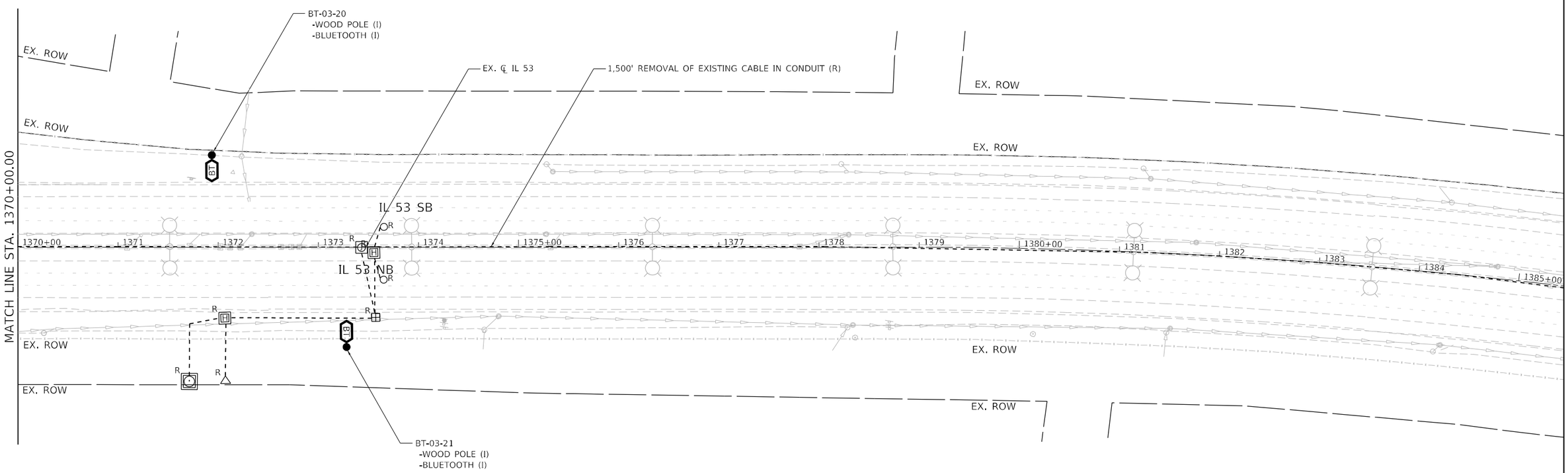

ITS–23

MODEL: Default
FILE NAME: S:\DL\6300-6399\63461 13\Drawings\CADMicro-SSA\CAD_Sheet\D162W38-sht-ITS-removal-IL53-SAI.dgn

STRAND ASSOCIATES® 1170 SOUTH HOUBOLT ROAD JOLIET, ILLINOIS 60431 (815) 744-4200	USER NAME = jaker	DESIGNED - RRS	REVISED -	STATE OF ILLINOIS DEPARTMENT OF TRANSPORTATION	IL ROUTE 53 ITS REMOVAL AND TEMPORARY ITS PLAN	F.A.P. RTE.	SECTION	COUNTY	TOTAL SHEETS / SHEET NO.
		DRAWN - JLN	REVISED -			342	(531) BR 23	COOK	1211 / 624
	PLOT SCALE = 100.0000 ' / in.	CHECKED - BMS	REVISED -					CONTRACT NO. 62W38	
	PLOT DATE = 8/26/2024	DATE - 8/23/2024	REVISED -		SCALE: 1" = 50' SHEET 19 OF 19 SHEETS STA. 1360+00.00 TO STA. 1370+00.00		ILLINOIS	FED. AID PROJECT	

0 50 100 150
SCALE IN FEET

(2) FOC 144 COUNT IN IDOT MICRODUCT INSTALLED UNDER CONTRACT 62N91

COMM VAULT (I) [CMV-02-01]
- FOC SPLICE-MAINLINE-TRUNK (I)

COMM VAULT (I) [CMV-02-02]
- FOC SPLICE-MAINLINE-DISTRIBUTION (I)

(2) 900' OF IDOT MICRODUCT (I)
-FOC 144 COUNT SM (I) [TCF-02-001]
-FOC 144 COUNT SM (I) [DCF-02-001]

EX. ROW

EX. ℄ IL 53

IL 53 SB

IL 53 NB

1184 1185+00 1186 1187 1188 1189 1190+00 1191 1192 1193 1194 1195+00

630+00 631 632 633 634 635+00 636

664 665+00 666 667 668

MATCHLINE STA. 1196+00

EX. ROW

INTERCEPT EXISTING CONDUIT

800' OF 4" DIA PVC EIS (I)

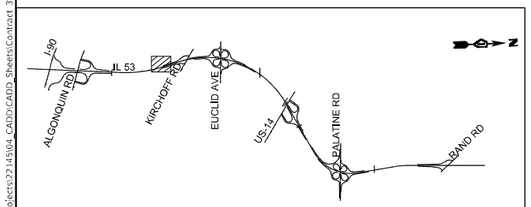

KEY MAP

ITS–24

SINGH
SINGH + ASSOCIATES, INC.
CONSULTING ENGINEERS

USER NAME = vnunez	DESIGNED - SG	REVISED -
	DRAWN VN	REVISED -
PLOT SCALE = 100.0000 ' / in.	CHECKED - RP	REVISED -
PLOT DATE = 9/20/2024	DATE - 07/24/2024	REVISED -

STATE OF ILLINOIS
DEPARTMENT OF TRANSPORTATION

IL ROUTE 53
ITS INSTALLATION PLAN

SCALE: 1" = 50' | SHEET OF SHEETS | STA. TO STA.

F.A.P. RTE.	SECTION	COUNTY	TOTAL SHEETS	SHEET NO.
342	2018-100-BR	COOK	1211	625
		CONTRACT NO. 62W38		
		ILLINOIS	FED. AID PROJECT	

MODEL: Default
FILE NAME: \\f601\Projects\22145\04_CADD\CADD_Sheets\Contract_30162W38-dot-sht-its-21.dgn

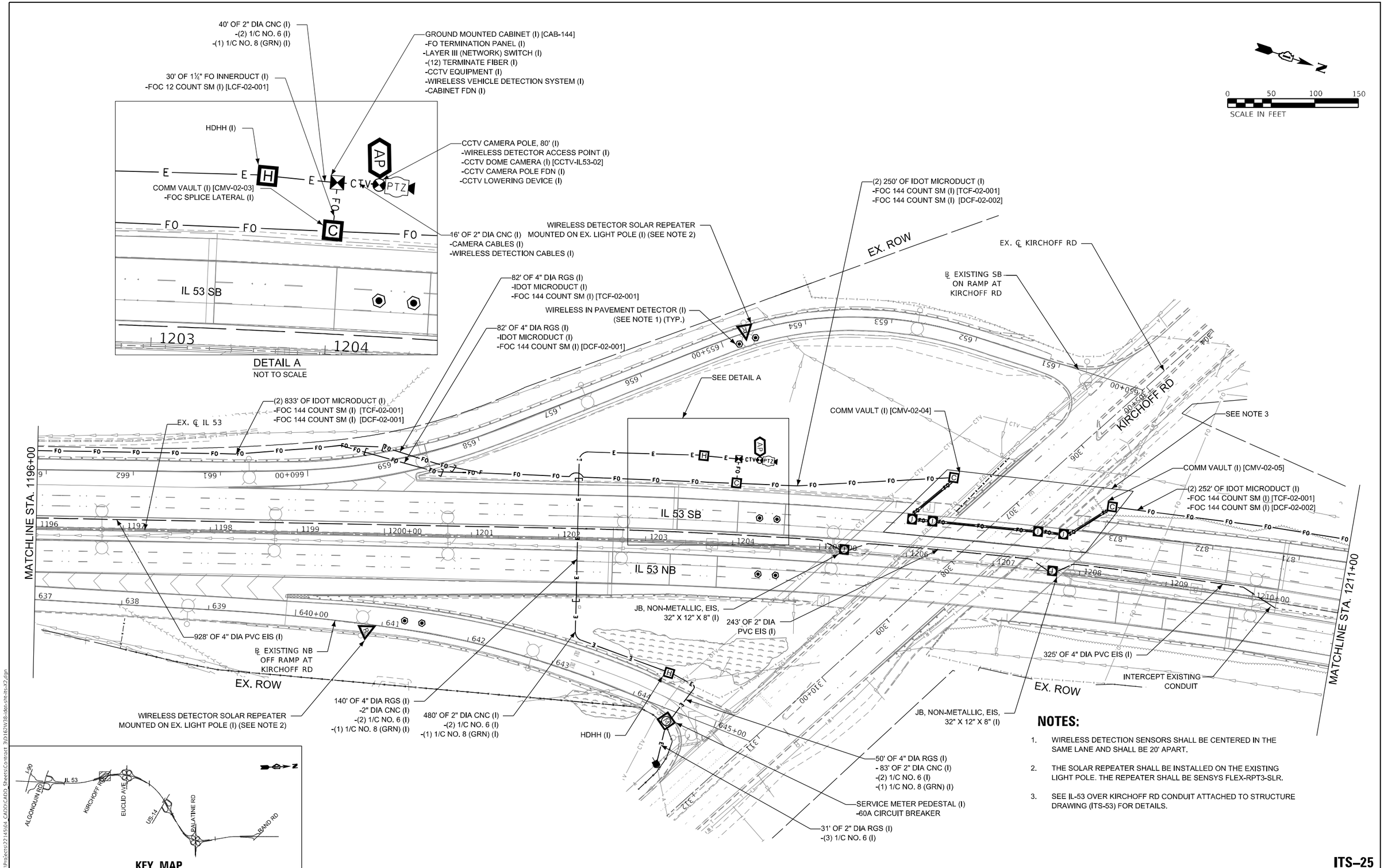

NOTES:

1. WIRELESS DETECTION SENSORS SHALL BE CENTERED IN THE SAME LANE AND SHALL BE 20' APART.
2. THE SOLAR REPEATER SHALL BE INSTALLED ON THE EXISTING LIGHT POLE. THE REPEATER SHALL BE SENSYS FLEX-RPT3-SLR.
3. SEE IL-53 OVER KIRCHOFF RD CONDUIT ATTACHED TO STRUCTURE DRAWING (ITS-53) FOR DETAILS.

ITS–25

MODEL: Default
FILE NAME: \\61\Projects\22145\04_CADD\CADD_Sheets\Contract 30\62W38-dds-sh-its-x2.dgn

SINGH
SINGH + ASSOCIATES, INC.
CONSULTING ENGINEERS

USER NAME = mgonzalez	DESIGNED - SG	REVISED -	
	DRAWN VN	REVISED -	
PLOT SCALE = 100.0000 ' / in.	CHECKED - RP	REVISED -	
PLOT DATE = 8/23/2024	DATE - 07/24/2024	REVISED -	

STATE OF ILLINOIS
DEPARTMENT OF TRANSPORTATION

IL ROUTE 53
ITS INSTALLATION PLAN

SCALE: 1" = 50' | SHEET OF SHEETS | STA. TO STA.

F.A.P. RTE.	SECTION	COUNTY	TOTAL SHEETS	SHEET NO.
342	2018-100-BR	COOK	1211	626
		CONTRACT NO. 62W38		
		ILLINOIS	FED. AID PROJECT	

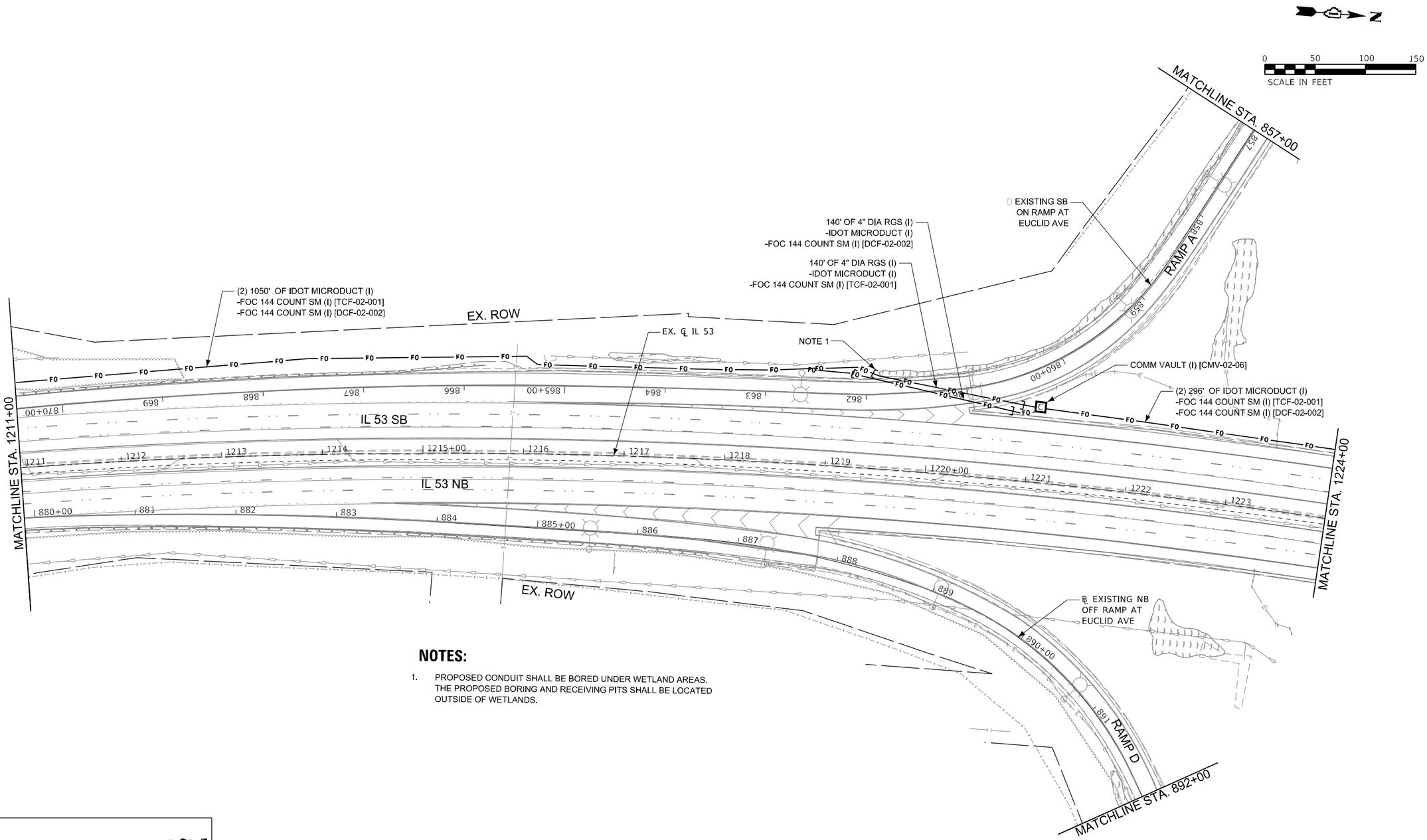

NOTES:

1. PROPOSED CONDUIT SHALL BE BORED UNDER WETLAND AREAS. THE PROPOSED BORING AND RECEIVING PITS SHALL BE LOCATED OUTSIDE OF WETLANDS.

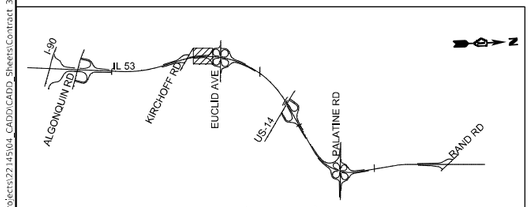

KEY MAP

ITS–26

MODEL: Default
FILE NAME: \\fg01\Projects\22145\04_CADD\CADD_Sheets\Contract 3D\62W38-dds-int-its-x3.dgn

SINGH
SINGH + ASSOCIATES, INC.
CONSULTING ENGINEERS

USER NAME = mgonzalez	DESIGNED - SG	REVISED -	
	DRAWN VN	REVISED -	
PLOT SCALE = 100.0000 ' / in.	CHECKED - RP	REVISED -	
PLOT DATE = 8/23/2024	DATE - 07/24/2024	REVISED -	

STATE OF ILLINOIS
DEPARTMENT OF TRANSPORTATION

IL ROUTE 53
ITS INSTALLATION PLAN

SCALE: 1" = 50' | SHEET OF SHEETS | STA. TO STA.

F.A.P. RTE.	SECTION	COUNTY	TOTAL SHEETS	SHEET NO.
342	2018-100-BR	COOK	1211	627

CONTRACT NO. 62W38

ILLINOIS | FED. AID PROJECT

NOTES:

1. WIRELESS DETECTION SENSORS SHALL BE CENTERED IN THE SAME LANE AND SHALL BE 20' APART.
2. THE SOLAR REPEATER SHALL BE INSTALLED ON THE EXISTING LIGHT POLE. THE REPEATER SHALL BE SENSYS FLEX-RPT3-SLR.

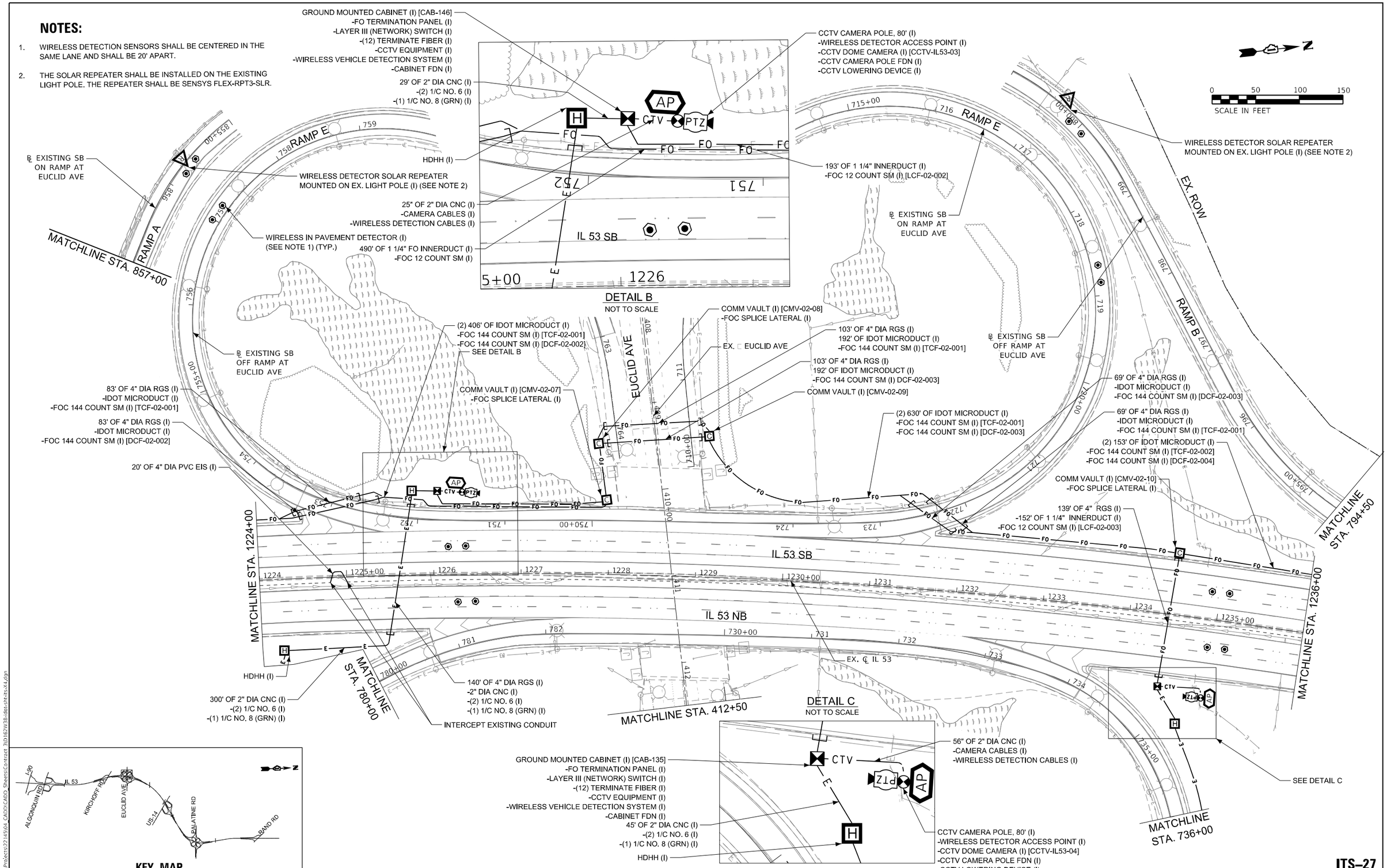

ITS–27

SINGH + ASSOCIATES, INC. CONSULTING ENGINEERS	USER NAME = mgonzalez	DESIGNED - SG	REVISED -
		DRAWN - VN	REVISED -
	PLOT SCALE = 100.0000 ' / in.	CHECKED - RP	REVISED -
	PLOT DATE = 8/23/2024	DATE - 07/24/2024	REVISED -

STATE OF ILLINOIS
DEPARTMENT OF TRANSPORTATION

IL ROUTE 53
ITS INSTALLATION PLAN

SCALE: 1" = 50' | SHEET OF SHEETS | STA. TO STA.

F.A.P. RTE.	SECTION	COUNTY	TOTAL SHEETS	SHEET NO.
342	2018-100-BR	COOK	1211	628

CONTRACT NO. 62W38

ILLINOIS | FED. AID PROJECT

MODEL: Default
FILE NAME: \\fg01\Projects\22145\04_CADD\CADD_Sheets\Contract 3\0162W38-idot-ilrt-ts-x4.dgn

MATCHLINE STA. 780+00

MATCHLINE STA. 412+50

MATCHLINE STA. 892+00

MATCHLINE STA. 736+00

MATCHLINE STA. 819+00

240' OF 2" DIA CNC (I)
-(2) 1/C NO. 6 (I)
-(1) 1/C NO. 8 (GRN) (I)

HDHH (I)

℄ EXISTING NB ON RAMP AT EUCLID AVE

℄ EXISTING NB OFF RAMP AT EUCLID AVE

WIRELESS IN PAVEMENT DETECTOR (I) (SEE NOTE 1) (TYP.)

EX. ℄ EUCLID AVE

80' OF 4" DIA RGS (I)
-2" DIA CNC (I)
-(2) 1/C NO. 6 (I)
-(1) 1/C NO. 8 (GRN) (I)

395' OF 2" DIA CNC (I)
-(2) 1/C NO. 6 (I)
-(1) 1/C NO. 8 (GRN) (I)

603' OF 2" DIA CNC (I)
-(2) 1/C NO. 6 (I)
-(1) 1/C NO. 8 (GRN) (I)

℄ EXISTING NB OFF RAMP AT EUCLID AVE

WIRELESS DETECTOR SOLAR REPEATER MOUNTED ON EX. LIGHT POLE (I) (SEE NOTE 2)

HDHH (I)

RAMP D

RAMP E

RAMP E

RAMP C

EUCLID AVE

EX. ROW

EX. ROW

EX. ROW

HDHH (I)

120' OF 2" DIA CNC (I)
-(4) 1/C NO. 6 (I)
-(2) 1/C NO. 8 (GRN) (I)

℄ EXISTING NB ON RAMP AT EUCLID AVE

34' OF 4" DIA GSC (I)
-2" DIA CNC (I)
-(4) 1/C NO. 6 (I)
-(2) 1/C NO. 8 (GRN) (I)

WIRELESS DETECTOR SOLAR REPEATER MOUNTED ON EX. LIGHT POLE (I) (SEE NOTE 2)

455' OF 2" DIA CNC (I)
-(2) 1/C NO. 6 (I)
-(1) 1/C NO. 8 (GRN) (I)

SERVICE METER PEDESTAL (I)
-100A CIRCUIT BREAKER

30' OF 2" DIA RGS (I)
-(3) 1/C NO. 6 (I)

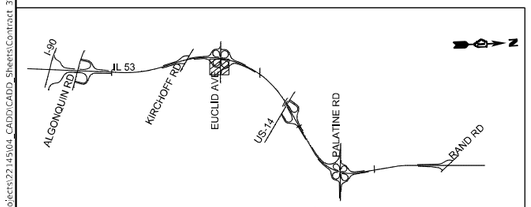

KEY MAP

NOTES:

1. WIRELESS DETECTION SENSORS SHALL BE CENTERED IN THE SAME LANE AND SHALL BE 20' APART.
2. THE SOLAR REPEATER SHALL BE INSTALLED ON THE EXISTING LIGHT POLE. THE REPEATER SHALL BE SENSYS FLEX-RPT3-SLR.

0 50 100 150
SCALE IN FEET

ITS–28

MODEL: Default
FILE NAME: \\fs01\Projects\22145\04_CADD\CADD_Sheets\Contract 3\0162W38-ddb-ihr-ltr-x5.dgn

SINGH
SINGH + ASSOCIATES, INC.
CONSULTING ENGINEERS

USER NAME = mgonzalez	DESIGNED - SG	REVISED -	
	DRAWN VN	REVISED -	
PLOT SCALE = 100.0010 ' / in.	CHECKED - RP	REVISED -	
PLOT DATE = 8/23/2024	DATE - 07/24/2024	REVISED -	

STATE OF ILLINOIS
DEPARTMENT OF TRANSPORTATION

IL ROUTE 53
ITS INSTALLATION PLAN

SCALE: 1" = 50' | SHEET OF SHEETS | STA. TO STA.

F.A.P. RTE.	SECTION	COUNTY	TOTAL SHEETS	SHEET NO.
342	2018-100-BR	COOK	1211	629

CONTRACT NO. 62W38

ILLINOIS | FED. AID PROJECT

0 50 100 150
SCALE IN FEET

(2) 417' OF IDOT MICRODUCT (I)
-FOC 144 COUNT SM (I) [TCF-02-002]
-FOC 144 COUNT SM (I) [DCF-02-004]

101' OF 4" DIA RGS (I)
-IDOT MICRODUCT (I)
-FOC 144 COUNT SM (I) [DCF-02-004]

103' OF 4" DIA RGS (I)
-IDOT MICRODUCT (I)
-FOC 144 COUNT SM (I) [TCF-02-002]

℄ EXISTING SB OFF RAMP AT EUCLID AVE

EX. ROW

MATCHLINE STA. 794+50

RAMP B

EX. ⊓ IL 53

MATCHLINE STA. 1236+00

IL 53 SB

IL 53 NB

MATCHLINE STA. 1240+00

℄ EXISTING NB ON RAMP AT EUCLID AVE

RAMP C

820+00

MATCHLINE STA. 819+00

EX. ROW

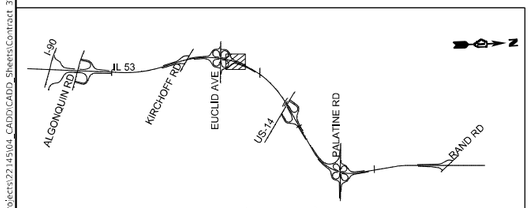

KEY MAP

ITS–29

SINGH + ASSOCIATES, INC. CONSULTING ENGINEERS	USER NAME = mgonzalez	DESIGNED - SG	REVISED -
		DRAWN VN	REVISED -
	PLOT SCALE = 100.0000 ' / in.	CHECKED - RP	REVISED -
	PLOT DATE = 8/23/2024	DATE - 07/24/2024	REVISED -

STATE OF ILLINOIS
DEPARTMENT OF TRANSPORTATION

IL ROUTE 53
ITS INSTALLATION PLAN

SCALE: 1" = 50' | SHEET OF SHEETS | STA. TO STA.

F.A.P. RTE.	SECTION	COUNTY	TOTAL SHEETS	SHEET NO.
342	2018-100-BR	COOK	1211	630
		CONTRACT NO. 62W38		
	ILLINOIS	FED. AID PROJECT		

MODEL: Default
FILE NAME: \\fs01\Projects\22145\04_CADD\CADD_Sheets\Contract 30\62W38-idot-cit-its-x6.dgn

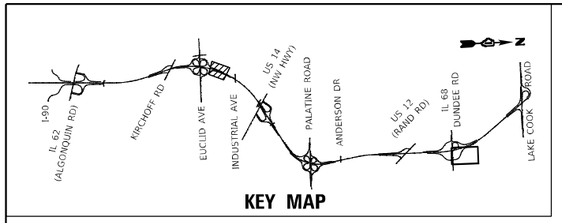

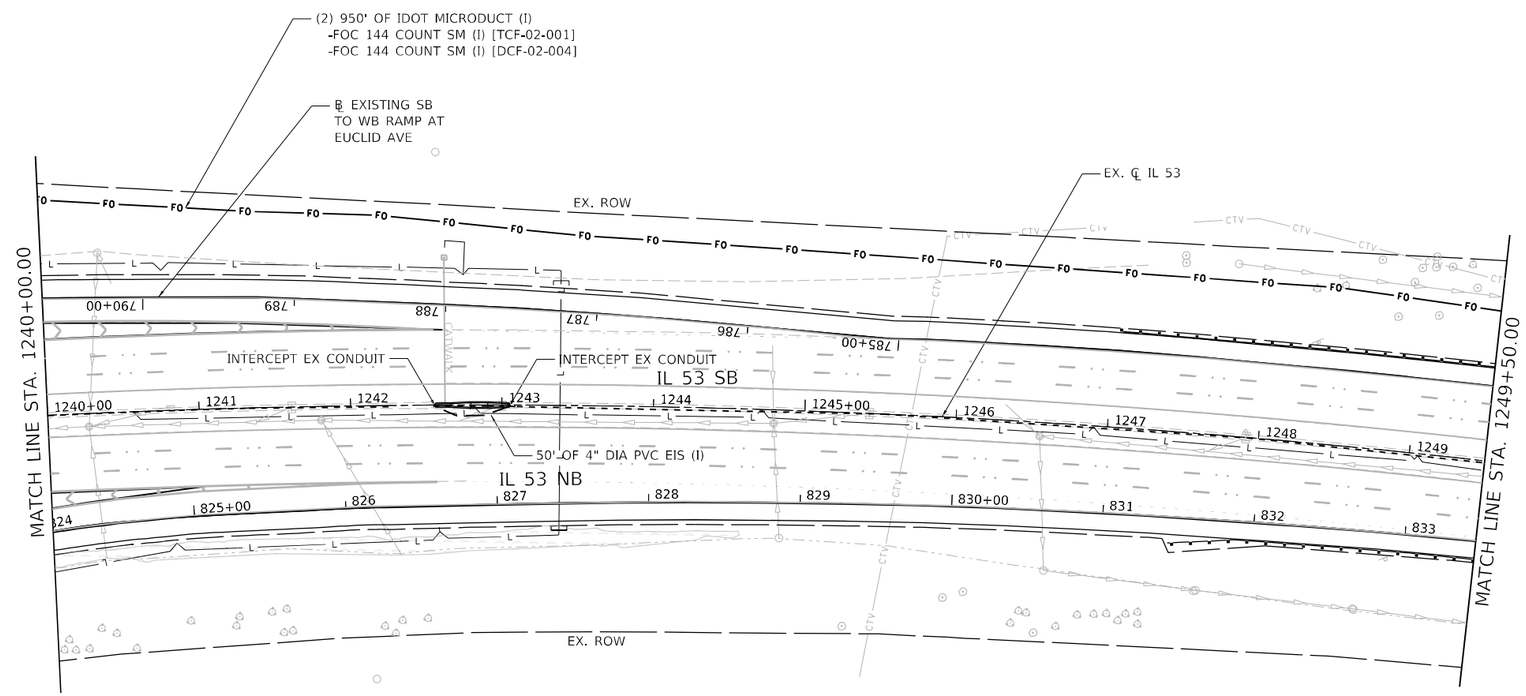

SCALE IN FEET: 0 50 100 150

ITS–30

MODEL: Default
FILE NAME: S:\JOB\6300-6399\6346\13\Drawings\CAD\Micro-SS4\CAD_Sheets\D167V38-IH-ITS-installation-053-53-SA1.dgn

STRAND ASSOCIATES
1170 SOUTH HOUBOLT ROAD
JOLIET, ILLINOIS 60431
(815) 744-4200

USER NAME = jaker	DESIGNED - RRS	REVISED -	
	DRAWN - JLN	REVISED -	
PLOT SCALE = 100.0000 ' / in.	CHECKED - BMS	REVISED -	
PLOT DATE = 8/26/2024	DATE - 8/23/2024	REVISED -	

STATE OF ILLINOIS
DEPARTMENT OF TRANSPORTATION

IL ROUTE 53
ITS INSTALLATION PLAN

SCALE: 1" = 50' | SHEET 7 OF 19 SHEETS | STA. 1236+50.00 TO STA. 1249+50.00

F.A.P. RTE.	SECTION	COUNTY	TOTAL SHEETS	SHEET NO.
342	(531) BR 23	COOK	1211	631
		CONTRACT NO. 62W38		
		ILLINOIS	FED. AID PROJECT	

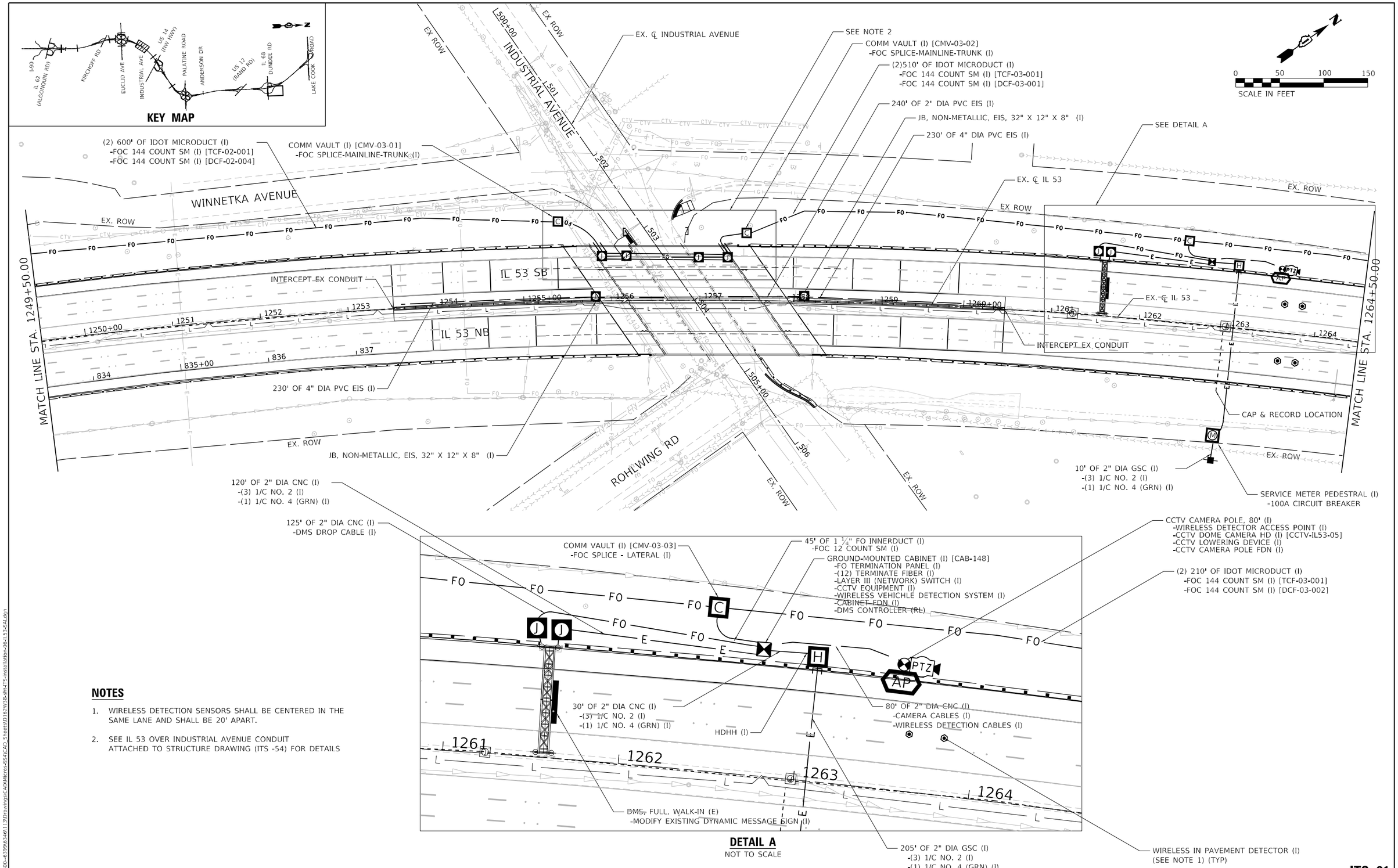

NOTES

1. WIRELESS DETECTION SENSORS SHALL BE CENTERED IN THE SAME LANE AND SHALL BE 20' APART.
2. SEE IL 53 OVER INDUSTRIAL AVENUE CONDUIT ATTACHED TO STRUCTURE DRAWING (ITS -54) FOR DETAILS

DETAIL A
NOT TO SCALE

ITS–31

MODEL: Default
FILE NAME: S:\JOB\6300-6399\6346\113\Drawings\CAD\Micro-SS4\CAD_Sheets\0162W38-IM-ITS-installation-06-IL53-S4.dgn

STRAND ASSOCIATES
1170 SOUTH HOUBOLT ROAD
JOLIET, ILLINOIS 60431
(815) 744-4200

USER NAME = jaker	DESIGNED - RRS	REVISED -	
	DRAWN - JLN	REVISED -	
PLOT SCALE = 100.0000 ' / in.	CHECKED - BMS	REVISED -	
PLOT DATE = 8/26/2024	DATE - 8/23/2024	REVISED -	

STATE OF ILLINOIS
DEPARTMENT OF TRANSPORTATION

IL ROUTE 53
ITS INSTALLATION PLAN

SCALE: 1" = 50' | SHEET 8 OF 19 SHEETS | STA. 1249+50.00 TO STA. 1264+50.00

F.A.P. RTE.	SECTION	COUNTY	TOTAL SHEETS	SHEET NO.
342	(531) BR 23	COOK	1211	632

CONTRACT NO. 62W38

ILLINOIS | FED. AID PROJECT

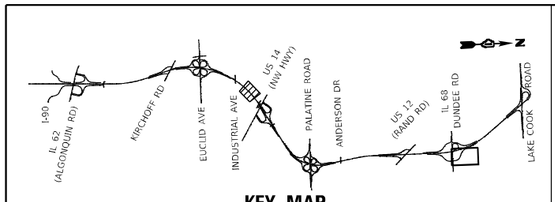

KEY MAP

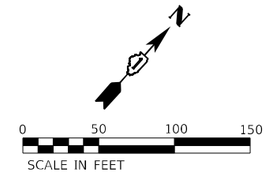

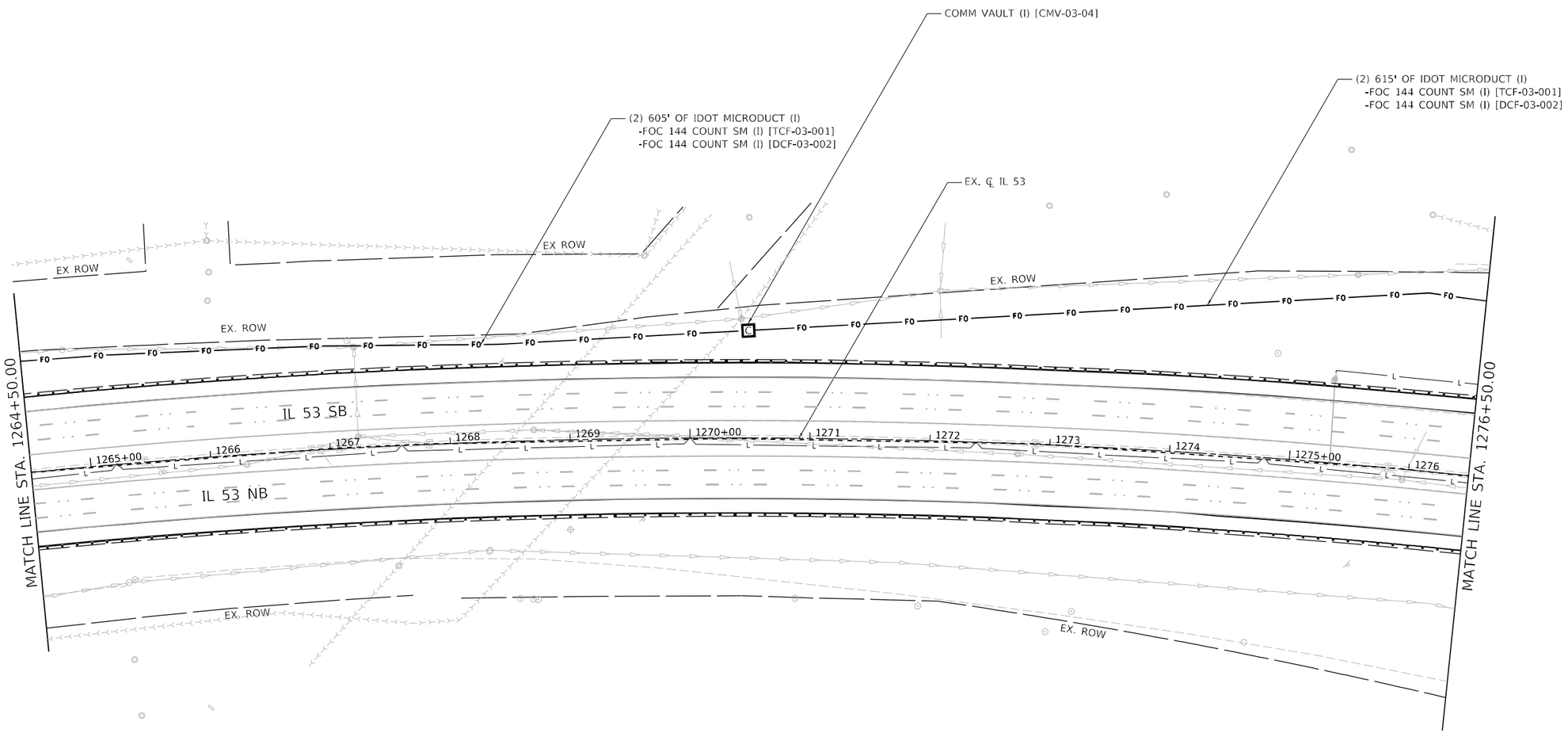

ITS–32

1170 SOUTH HOUBOLT ROAD JOLIET, ILLINOIS 60431 (815) 744-4200	USER NAME = jaker	DESIGNED - RRS	REVISED -	STATE OF ILLINOIS DEPARTMENT OF TRANSPORTATION	IL ROUTE 53 ITS INSTALLATION PLAN	F.A.P. RTE.	SECTION	COUNTY	TOTAL SHEETS	SHEET NO.
		DRAWN - JLN	REVISED -			342	(531) BR 23	COOK	1211	633
	PLOT SCALE = 100.0000 ' / in.	CHECKED - BMS	REVISED -					CONTRACT NO. 62W38		
	PLOT DATE = 8/26/2024	DATE - 8/23/2024	REVISED -		SCALE: 1" = 50' SHEET 9 OF 19 SHEETS STA. 1264+50.00 TO STA. 1276+50.00			ILLINOIS FED. AID PROJECT		

STRAND ASSOCIATES®

MODEL: Default
FILE NAME: S:\JOB\6300-6399\6346\13\Drawings\CADMicro\SSA\CAD_Sheets\D167V38-sh-ITS-installation-07-I53-SA1.dgn

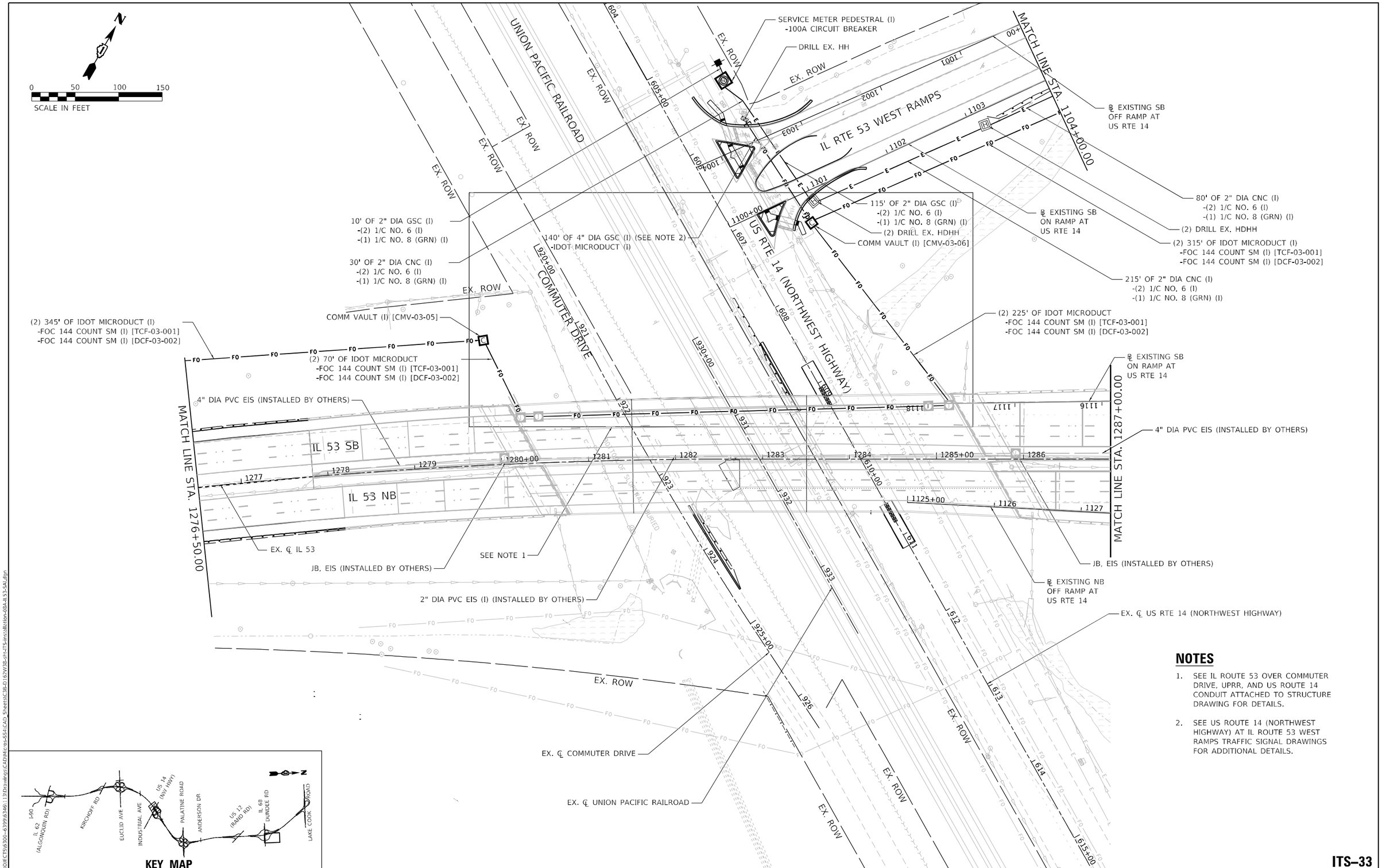

NOTES

1. SEE IL ROUTE 53 OVER COMMUTER DRIVE, UPRR, AND US ROUTE 14 CONDUIT ATTACHED TO STRUCTURE DRAWING FOR DETAILS.
2. SEE US ROUTE 14 (NORTHWEST HIGHWAY) AT IL ROUTE 53 WEST RAMPS TRAFFIC SIGNAL DRAWINGS FOR ADDITIONAL DETAILS.

ITS–33

MODEL: Default
FILE NAME: G:\PROJECTS\6300-6399\6346\13\Drawings\CAD\Micro-SS4\CAD Sheets\C3B-D162W38-IH-ITS-installation-08-IL53-SA.dgn

STRAND ASSOCIATES®
1170 SOUTH HOUBOLT ROAD
JOLIET, ILLINOIS 60431
(815) 744-4200

USER NAME = jaker	DESIGNED - RRS	REVISED -	
	DRAWN - JLN	REVISED -	
PLOT SCALE = 100.0000 ' / in.	CHECKED - BMS	REVISED -	
PLOT DATE = 9/20/2024	DATE - 8/23/2024	REVISED -	

STATE OF ILLINOIS
DEPARTMENT OF TRANSPORTATION

IL ROUTE 53
ITS INSTALLATION PLAN

SCALE: 1" = 50' | SHEET 10 OF 19 SHEETS | STA. 1276+50.00 TO STA. 1287+00.00

F.A.P. RTE.	SECTION	COUNTY	TOTAL SHEETS	SHEET NO.
342	(531) BR 23	COOK	1211	634
		CONTRACT NO. 62W38		
	ILLINOIS	FED. AID PROJECT		

(2) DRILL EX. HDHH

EX. ROW

MATCH LINE STA. 1104+00.00

℄ EXISTING SB ON RAMP AT US RTE 14

175' OF 2" DIA CNC (I)
-(2) 1/C NO. 6 (I)
-(1) 1/C NO. 8 (GRN) (I)

(2) 530' OF IDOT MICRODUCT (I)
-FOC 144 COUNT SM (I) [TCF-03-001]
-FOC 144 COUNT SM (I) [DCF-03-008]

SEE DETAIL A

340' OF 2" DIA CNC (I)
-(2) 1/C NO. 6 (I)
-(1) 1/C NO. 8 (GRN) (I)

(2) 110' OF IDOT MICRODUCT (I)
-FOC 144 COUNT SM (I) [TCF-03-001]
-FOC 144 COUNT SM (I) [DCF-03-003]

40' OF 4" DIA GSC (I)
-IDOT MICRODUCT (I)
-FOC 144 COUNT SM (I) [TCF-03-001]

40' OF 4" DIA GSC (I)
-IDOT MICRODUCT (I)
-FOC 144 COUNT SM (I) [DCF-03-003]

(2) 65' OF IDOT MICRODUCT (I)
-FOC 144 COUNT SM (I) [TCF-03-001]
-FOC 144 COUNT SM (I) [DCF-03-003]

COMM VAULT (I) [CMV-03-08]
-FOC SPLICE-MAINLINE (I)

65' OF 2" DIA CNC (I)
-CAMERA CABLES (I)
-WIRELESS DETECTION CABLES (I)

(2) 635' OF IDOT MICRODUCT (I)
-FOC 144 COUNT SM (I) [TCF-03-002]
-FOC 144 COUNT SM (I) [DCF-03-003]

CCTV CAMERA POLE, 80' (I)
-WIRELESS DETECTOR ACCESS POINT (I)
-CCTV DOME CAMERA (I) [CCTV-IL53-06]
-CCTV LOWERING DEVICE (I)
-CCTV CAMERA POLE FDN (I)

℄ EXISTING SB OFF RAMP AT US RTE 14

50' OF 4" DIA GSC (I)
-IDOT MICRODUCT (I)
-FOC 144 COUNT SM (I) [TCF-03-001]

50' OF 4" DIA GSC (I)
-IDOT MICRODUCT (I)
-FOC 144 COUNT SM (I) [DCF-03-003]

(2) 90' OF IDOT MICRODUCT (I)
-FOC 144 COUNT SM (I) [TCF-03-001]
-FOC 144 COUNT SM (I) [DCF-03-003]

COMM VAULT (I) [CMV-03-07]
-FOC SPLICE-LATERAL (I)

HDHH (I)

90' OF 2" DIA CNC (I)
-(2) 1/C NO. 6 (I)
-(1) 1/C NO. 8 (GRN) (I)

N

0 50 100 150
SCALE IN FEET

115' OF 1 ¼" FO INNERDUCT (I)
-FOC 12 COUNT SM (I)

GROUND-MOUNTED CABINET (I) [CAB-150]
-FO TERMINATION PANEL (I) [PPF-XX-XXXX]
-(12) TERMINATE FIBER (I)
-LAYER III (NETWORK) SWITCH (I)
-CCTV EQUIPMENT (I)
-WIRELESS VEHICLE DETECTION SYSTEM (I)
-CABINET FDN (I)

DETAIL A
NOT TO SCALE

WIRELESS DETECTOR SOLAR REPEATER MOUNTED ON EX LIGHT POLE (I) (SEE NOTE 2)

MATCH LINE STA. 1287+00.00

MATCH LINE STA. 1299+00.00

IL 53 SB

IL 53 NB

WIRELESS IN PAVEMENT DETECTOR (I) (SEE NOTE 1) (TYP.)

EX. ℄ IL 53

4" DIA PVC EIS (INSTALLED BY OTHERS)

WIRELESS DETECTOR SOLAR REPEATER MOUNTED ON EX LIGHT POLE (I) (SEE NOTE 2)

℄ EXISTING NB OFF RAMP AT US RTE 14

℄ EXISTING NB ON RAMP AT US RTE 14

WIRELESS DETECTOR SOLAR REPEATER MOUNTED ON EX LIGHT POLE (I) (SEE NOTE 2)

KEY MAP

I-90, IL 62 (ALGONQUIN RD), KIRCHOFF RD, EUCLID AVE, INDUSTRIAL AVE, US 14 (NW HWY), PALATINE ROAD, ANDERSON DR, US 12 (RAND RD), IL 68 DUNDEE RD, LAKE COOK ROAD

NOTES

1. WIRELESS DETECTION SENSORS SHALL BE CENTERED IN THE SAME LANE AND SHALL BE 20' APART.
2. THE SOLAR REPEATER SHALL BE INSTALLED ON THE EXISTING LIGHT POLE. THE REPEATER SHALL BE SENSYS FLEX-RPT3-SLR.

ITS–34

MODEL: Default
FILE NAME: G:\PROJECTS\6300-63396346\13\Drawings\CAD\Micro-SSA\CAD Sheets\C38-D162W38-ITS-installation-08-IL53-S4.dgn

STRAND ASSOCIATES
1170 SOUTH HOUBOLT ROAD
JOLIET, ILLINOIS 60431
(815) 744-4200

USER NAME = jaker	DESIGNED - RRS	REVISED -	
	DRAWN - JLN	REVISED -	
PLOT SCALE = 100.0000 ' / in.	CHECKED - BMS	REVISED -	
PLOT DATE = 9/20/2024	DATE - 8/23/2024	REVISED -	

STATE OF ILLINOIS
DEPARTMENT OF TRANSPORTATION

IL ROUTE 53
ITS INSTALLATION PLAN

SCALE: 1" = 50' | SHEET 11 OF 19 SHEETS | STA. 1287+00.00 TO STA. 1299+00.00

F.A.P. RTE.	SECTION	COUNTY	TOTAL SHEETS	SHEET NO.
342	(531) BR 23	COOK	1211	635

CONTRACT NO. 62W38

ILLINOIS | FED. AID PROJECT

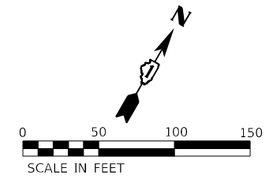

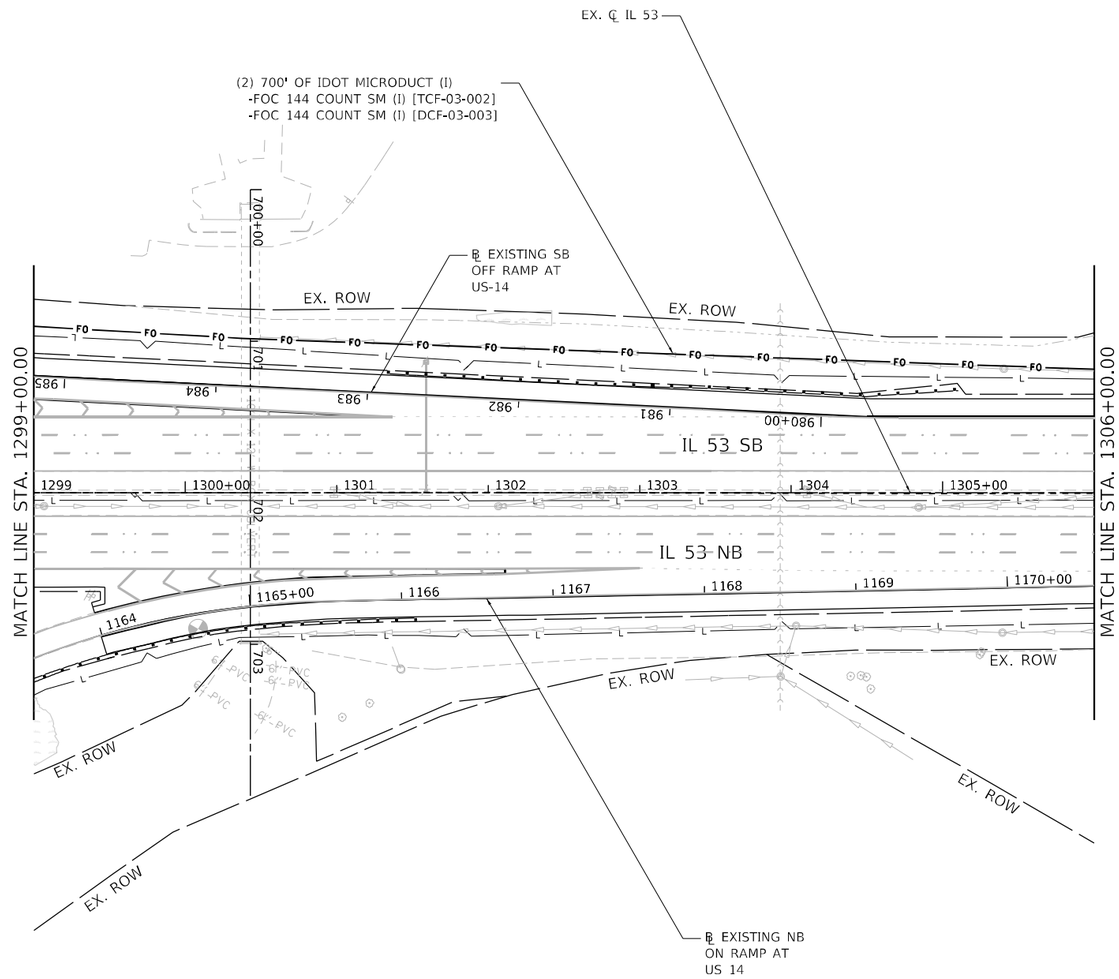

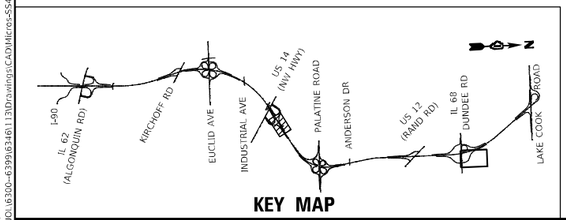

KEY MAP

ITS–35

MODEL: Default
FILE NAME: S:\DL\6300-6399\6346113\Drawings\CADD\Micro-SSA\CAD_Sheets\D162W38-IH-ITS-installation-09-IL53-SA.dgn

STRAND ASSOCIATES®
1170 SOUTH HOUBOLT ROAD
JOLIET, ILLINOIS 60431
(815) 744-4200

USER NAME = jaker	DESIGNED - RRS	REVISED -	
	DRAWN - JLN	REVISED -	
PLOT SCALE = 100.0000 ' / in.	CHECKED - BMS	REVISED -	
PLOT DATE = 8/26/2024	DATE - 8/23/2024	REVISED -	

STATE OF ILLINOIS
DEPARTMENT OF TRANSPORTATION

IL ROUTE 53
ITS INSTALLATION PLAN

SCALE: 1" = 50' | SHEET 12 OF 19 SHEETS | STA. 1291+00.00 TO STA. 1306+00.00

F.A.P. RTE.	SECTION	COUNTY	TOTAL SHEETS	SHEET NO.
342	(531) BR 23	COOK	1211	636
		CONTRACT NO. 62W38		
		ILLINOIS	FED. AID PROJECT	

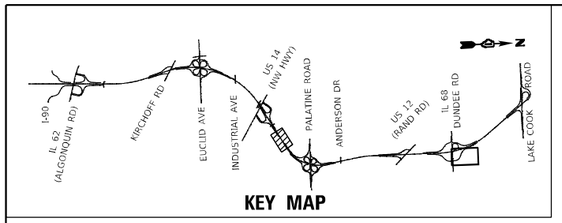

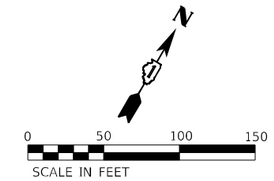

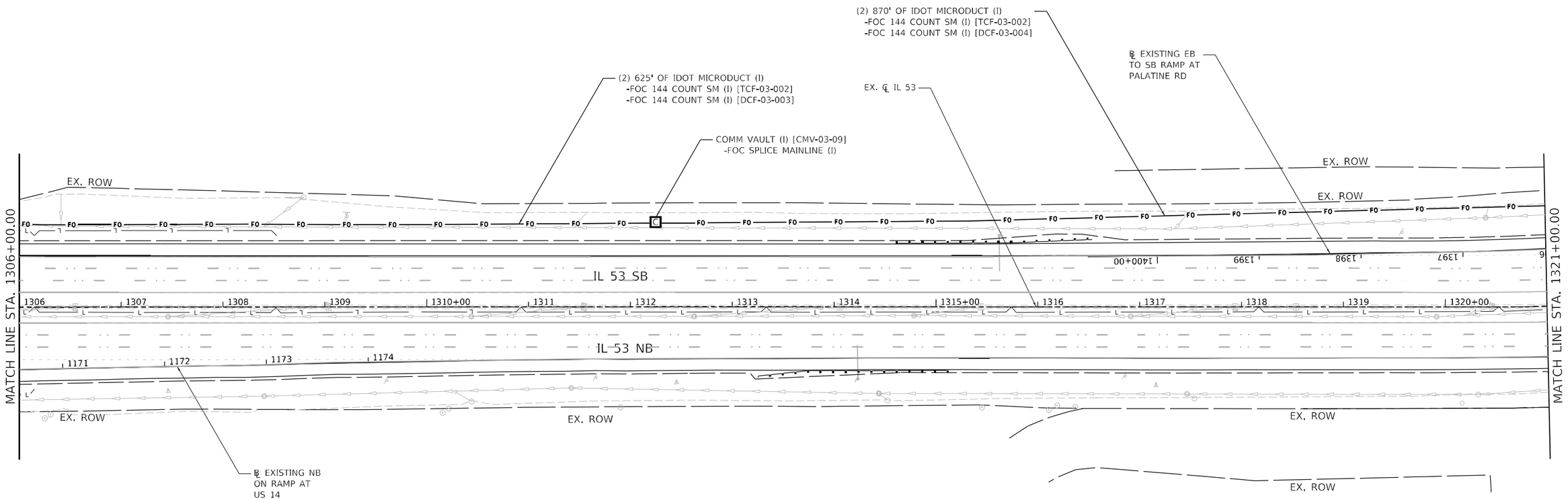

ITS–36

MODEL: Default
FILE NAME: S:\JOL\6300-6399\6346\13\Drawings\CAD\Micro-SS\CAD_Sheets\D167V38-sh-ITS-installation-10-I-53-SA1.dgn

STRAND ASSOCIATES®
1170 SOUTH HOUBOLT ROAD
JOLIET, ILLINOIS 60431
(815) 744-4200

USER NAME = jaker	DESIGNED - RRS	REVISED -	
	DRAWN - JLN	REVISED -	
PLOT SCALE = 100.0000 ' / in.	CHECKED - BMS	REVISED -	
PLOT DATE = 8/26/2024	DATE - 8/23/2024	REVISED -	

STATE OF ILLINOIS
DEPARTMENT OF TRANSPORTATION

IL ROUTE 53
ITS INSTALLATION PLAN

SCALE: 1" = 50' | SHEET 13 OF 19 SHEETS | STA. 1306+00.00 TO STA. 1321+00.00

F.A.P. RTE.	SECTION	COUNTY	TOTAL SHEETS	SHEET NO.
342	(531) BR 23	COOK	1211	637
		CONTRACT NO. 62W38		
		ILLINOIS	FED. AID PROJECT	

0 50 100 150
SCALE IN FEET

(2) 1055' OF IDOT MICRODUCT (I)
-FOC 144 COUNT SM (I) [TCF-03-002]
-FOC 144 COUNT SM (I) [DCF-03-004]

COMM VAULT (I) [CMV-03-10]

60' OF 4" DIA GSC (I)
-IDOT MICRODUCT
-FOC 144 COUNT SM (I) [DCF-03-004]

60' OF 4" DIA GSC (I)
-IDOT MICRODUCT
-FOC 144 COUNT SM (I) [TCF-03-002]

(2) 360' OF IDOT MICRODUCT (I)
-FOC 144 COUNT SM (I) [TCF-03-002]
-FOC 144 COUNT SM (I) [DCF-03-004]

℄ EXISTING EB
TO SB RAMP AT
PALATINE RD

℄ EXISTING NB
TO EB RAMP AT
PALATINE RD

MATCH LINE STA. 1321+00.00

MATCH LINE STA. 1335+50.00

IL 53 SB

IL 53 NB

EX ROW

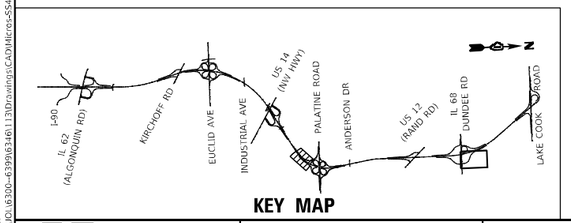

KEY MAP

ITS–37

MODEL: Default
FILE NAME: S:\JO\6300-6399\6346\13\Drawings\CAD\Micros-SSA\CAD Sheets\D162W38-sht-ITS-installation-11-IL53-SA.dgn

STRAND ASSOCIATES® 1170 SOUTH HOUBOLT ROAD JOLIET, ILLINOIS 60431 (815) 744-4200	USER NAME = jaker	DESIGNED - RRS	REVISED -	STATE OF ILLINOIS DEPARTMENT OF TRANSPORTATION	IL ROUTE 53 ITS INSTALLATION PLAN	F.A.P. RTE.	SECTION	COUNTY	TOTAL SHEETS	SHEET NO.
		DRAWN - JLN	REVISED -			342	(531) BR 23	COOK	1211	638
	PLOT SCALE = 100.0000 ' / in.	CHECKED - BMS	REVISED -					CONTRACT NO. 62W38		
	PLOT DATE = 8/26/2024	DATE - 8/23/2024	REVISED -		SCALE: 1" = 50' SHEET 14 OF 19 SHEETS STA. 1321+00.00 TO STA. 1335+50.00			ILLINOIS FED. AID PROJECT		

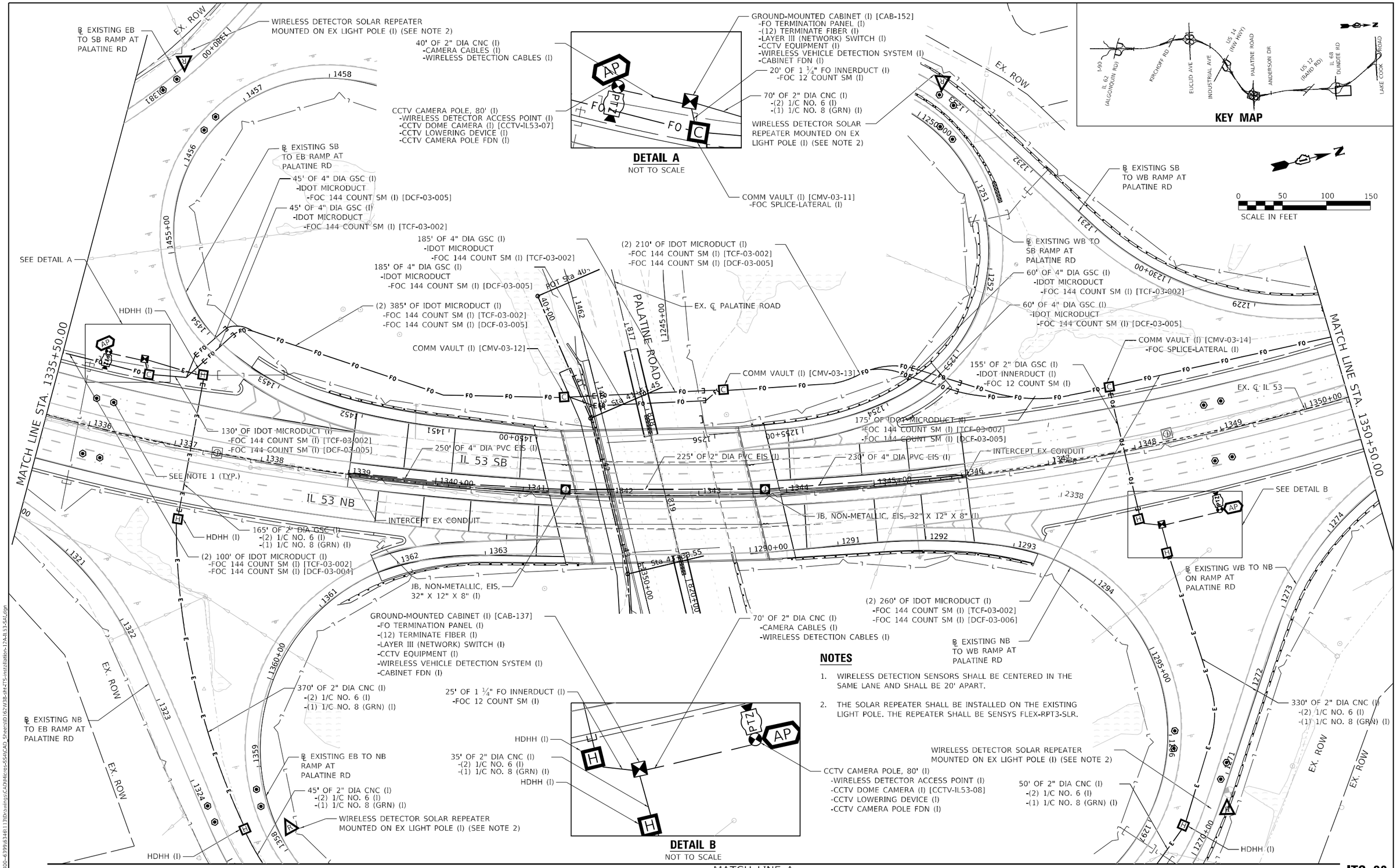

NOTES

1. WIRELESS DETECTION SENSORS SHALL BE CENTERED IN THE SAME LANE AND SHALL BE 20' APART.
2. THE SOLAR REPEATER SHALL BE INSTALLED ON THE EXISTING LIGHT POLE. THE REPEATER SHALL BE SENSYS FLEX-RPT3-SLR.

ITS–38

STRAND ASSOCIATES®
1170 SOUTH HOUBOLT ROAD
JOLIET, ILLINOIS 60431
(815) 744-4200

USER NAME = jaker	DESIGNED - RRS	REVISED -	
	DRAWN - JLN	REVISED -	
PLOT SCALE = 100.0000 ' / in.	CHECKED - BMS	REVISED -	
PLOT DATE = 8/26/2024	DATE - 8/23/2024	REVISED -	

STATE OF ILLINOIS
DEPARTMENT OF TRANSPORTATION

IL ROUTE 53
ITS INSTALLATION PLAN

SCALE: 1" = 50' | SHEET 15 OF 19 SHEETS | STA. 1335+50.00 TO STA. 1350+50.00

F.A.P. RTE.	SECTION	COUNTY	TOTAL SHEETS	SHEET NO.
342	(531) BR 23	COOK	1211	639
		CONTRACT NO. 62W38		
		ILLINOIS	FED. AID PROJECT	

MODEL: Default
FILE NAME: S:\JOL\6300-6399\6346\130\Drawings\CADD\Micro-SS4\CAD_Sheets\D162W38-ITS-Installation-12Aall 53-SA1.dgn

MATCH LINE A

℄ EXISTING EB TO NB RAMP AT PALATINE RD

℄ EXISTING NB TO WB RAMP AT PALATINE RD

℄ EXISTING WB TO NB RAMP AT PALATINE RD

℄ EXISTING NB TO EB RAMP AT PALATINE RD

EX. ROW

EX. ROW

EX. ROW

HDHH (I)

135' OF 4" DIA GSC (I)
-2" DIA CNC (I)
-(2) 1/C NO. 6 (I)
-(1) 1/C NO. 8 (GRN) (I)

HDHH (I)

395' OF 2" DIA CNC (I)
-(2) 1/C NO. 6 (I)
-(1) 1/C NO. 8 (GRN) (I)

190' OF 2" DIA CNC (I)
-(2) 1/C NO. 6 (I)
-(1) 1/C NO. 8 (GRN) (I)

125' OF 2" DIA CNC (I)
-(2) 1/C NO. 6 (I)
-(1) 1/C NO. 8 (GRN) (I)

45' OF 2" DIA GSC (I)
-(4) 1/C NO. 6 (I)
-(2) 1/C NO. 8 (GRN) (I)

380' OF 2" DIA CNC (I)
-(2) 1/C NO. 6 (I)
-(1) 1/C NO. 8 (GRN) (I)

HDHH (I)

HDHH (I)

90' OF 2" DIA CNC (I)
-(4) 1/C NO. 6 (I)
-(2) 1/C NO. 8 (GRN) (I)

YALE AVENUE

SERVICE METER PEDESTAL (I)
-100A CIRCUIT BREAKER

EX. ℄ PALATINE ROAD

SERVICE METER PEDESTRAL (I)
-100A CIRCUIT BREAKER

135' OF 2" DIA GSC (I)
-(2) 1/C NO. 6 (I)
-(1) 1/C NO. 8 (GRN) (I)

1325+00 1326 1327 1328 1329 1330+00 1331 1332 1333 1334 1335+00 1336 1337 1354 1355+00 1356 1357 1130 1300+00 1299 1298 1269 1268 1267 1266 1265+00 1264 1263 1262 1261 0+00 824 825+00 826 827 828 829 830+00 831

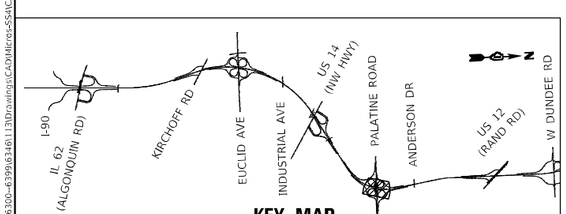

KEY MAP

ITS–39

STRAND ASSOCIATES
1170 SOUTH HOUBOLT ROAD
JOLIET, ILLINOIS 60431
(815) 744-4200

USER NAME = jaker	DESIGNED - RRS	REVISED -
	DRAWN - JLN	REVISED -
PLOT SCALE = 100.0000 ' / in.	CHECKED - BMS	REVISED -
PLOT DATE = 8/26/2024	DATE - 8/23/2024	REVISED -

STATE OF ILLINOIS
DEPARTMENT OF TRANSPORTATION

IL ROUTE 53
ITS INSTALLATION PLAN

SCALE: 1" = 50' | SHEET 16 OF 19 SHEETS | STA. 1335+50.00 TO STA. 1350+50.00

F.A.P. RTE.	SECTION	COUNTY	TOTAL SHEETS	SHEET NO.
342	(531) BR 23	COOK	1211	640
		CONTRACT NO. 62W38		
		ILLINOIS	FED. AID PROJECT	

MODEL: Default
FILE NAME: S:\JOB\63946\13\Drawings\CADMicro-SSA\CAD_Sheets\D162V38-IH-ITS-installation-12R-L1-53-54_dgn

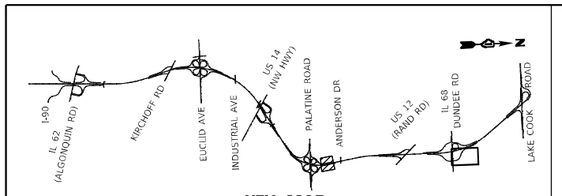

KEY MAP

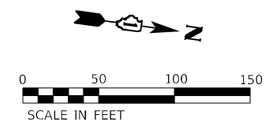

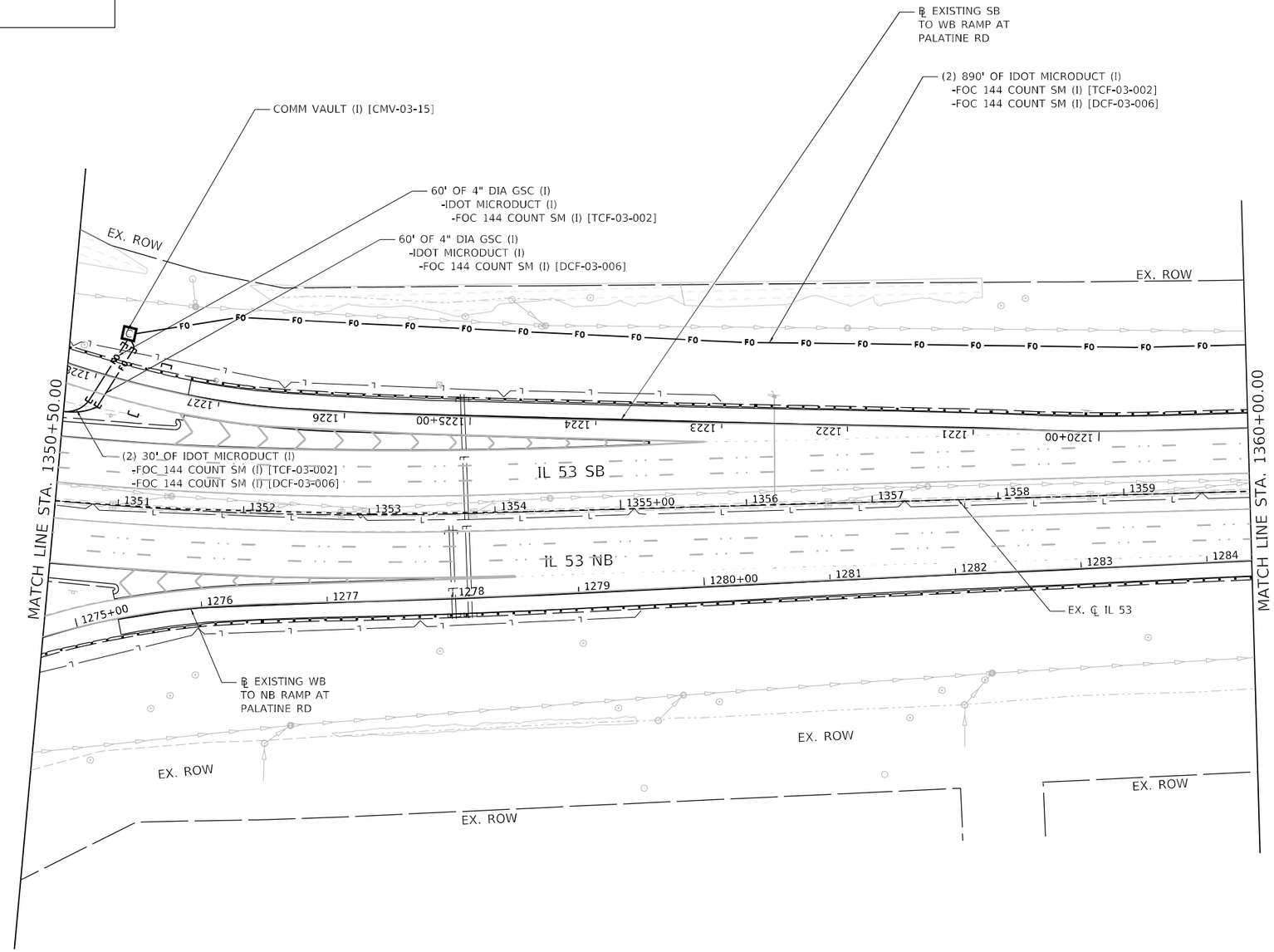

ITS–40

MODEL: Default
FILE NAME: S:\JOL\6300-6399\6346\13\Drawings\CADD\Micro-c\SA\CAD_Sheets\D162W38-IH-ITS-installation-13-1-53-SA1.dgn

STRAND ASSOCIATES®
1170 SOUTH HOUBOLT ROAD
JOLIET, ILLINOIS 60431
(815) 744-4200

USER NAME = Jaker	DESIGNED - RRS	REVISED -	
	DRAWN - JLN	REVISED -	
PLOT SCALE = 100.0000 ' / in.	CHECKED - BMS	REVISED -	
PLOT DATE = 8/26/2024	DATE - 8/23/2024	REVISED -	

STATE OF ILLINOIS
DEPARTMENT OF TRANSPORTATION

IL ROUTE 53
ITS INSTALLATION PLAN

SCALE: 1" = 50' | SHEET 17 OF 19 SHEETS | STA. 1350+50.00 TO STA. 1360+00.00

F.A.P. RTE.	SECTION	COUNTY	TOTAL SHEETS	SHEET NO.
342	(531) BR 23	COOK	1211	641
		CONTRACT NO. 62W38		
		ILLINOIS	FED. AID PROJECT	

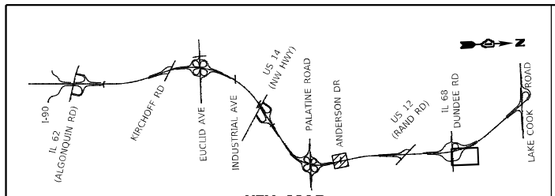

KEY MAP

0 50 100 150
SCALE IN FEET

EX. ℄ OF ANDERSON DRIVE
50' OF 4" DIA GSC (I)
-IDOT MICRODUCT (I)
-FOC 144 COUNT SM (I) [TCF-03-002]
50' OF 4" DIA GSC (I)
-IDOT MICRODUCT (I)
-FOC 144 COUNT SM (I) [DCF-03-006]
25' OF IDOT MICRODUCT (I)
-FOC 144 COUNT SM (I) [TCF-03-002]
25' OF IDOT MICRODUCT (I)
-FOC 144 COUNT SM (I) [DCF-03-006]
COMM VAULT (I) [CMV-03-17]
(2) 430' OF IDOT MICRODUCT (I)
-FOC 144 COUNT SM (I) [TCF-03-002]
-FOC 144 COUNT SM (I) [DCF-03-006]
(2) 510' OF IDOT MICRODUCT (I)
-FOC 144 COUNT SM (I) [TCF-03-002]
-FOC 144 COUNT SM (I) [DCF-03-006]
COMM VAULT (I) [CMV-03-16]
INTERCEPT EX CONDUIT
235' OF 4" DIA PVC EIS (I)
425' OF 4" DIA PVC EIS (I)
EX. ℄ IL 53
JB, NON-METALLIC, EIS, 32" X 12" X 8" (I)
75' OF 2" DIA PVC EIS (I)
EX. ROW
N WILKE RD
ANDERSON DRIVE
IL 53 SB
IL 53 NB
MATCH LINE STA. 1360+00.00
MATCH LINE STA. 1370+00.00
1360+00
1361
1362
1363
1364
1365+00
1366
1367
1368
1369
1285+00
1904

ITS–41

STRAND ASSOCIATES® 1170 SOUTH HOUBOLT ROAD JOLIET, ILLINOIS 60431 (815) 744-4200	USER NAME = Jaker	DESIGNED - RRS	REVISED -	STATE OF ILLINOIS DEPARTMENT OF TRANSPORTATION	IL ROUTE 53 ITS INSTALLATION PLAN	F.A.P. RTE.	SECTION	COUNTY	TOTAL SHEETS / SHEET NO.
		DRAWN - JLN	REVISED -			342	(531) BR 23	COOK	1211 / 642
	PLOT SCALE = 100.0000 ' / in.	CHECKED - BMS	REVISED -					CONTRACT NO. 62W38	
	PLOT DATE = 8/26/2024	DATE - 8/23/2024	REVISED -		SCALE: 1" = 50' SHEET 18 OF 19 SHEETS STA. 1360+00.00 TO STA. 1370+00.00			ILLINOIS FED. AID PROJECT	

MODEL: Default
FILE NAME: S:\JO\6300-6399\6346\13\Drawings\CAD\Micros-SSA\CAD_Sheets\D162V38-sht-ITS-installation-14-IL53-SA.dgn

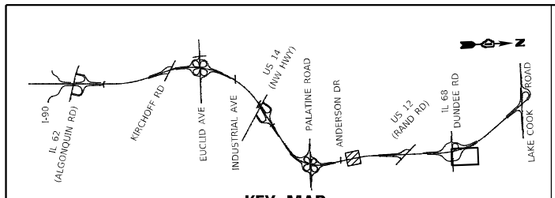

KEY MAP

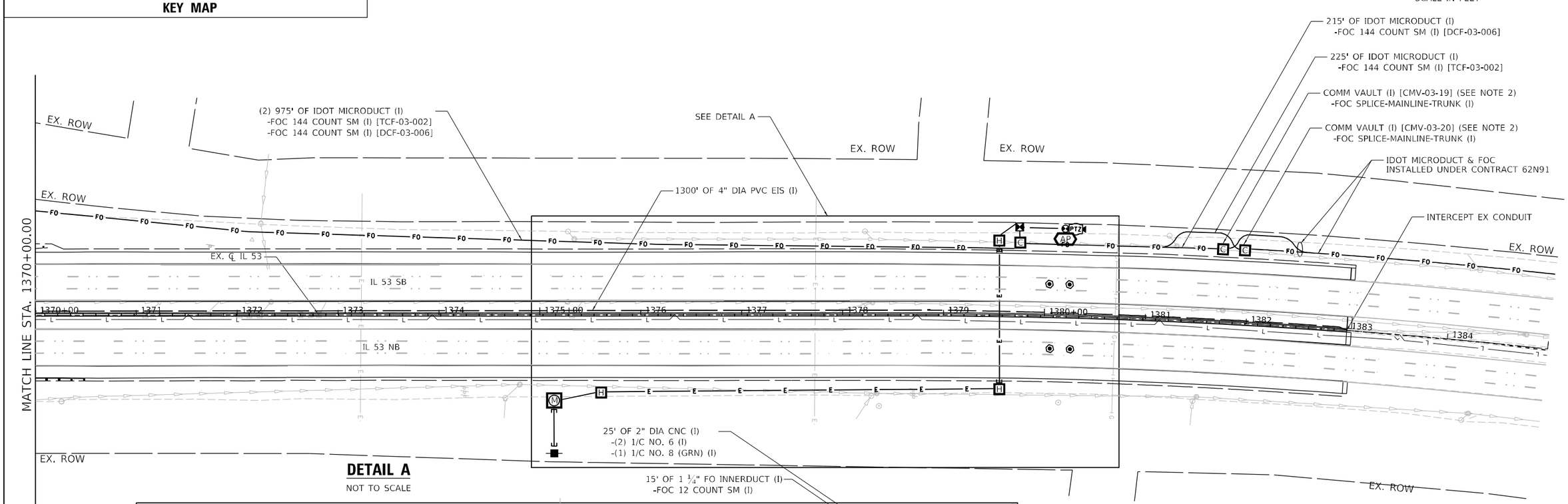

DETAIL A

NOT TO SCALE

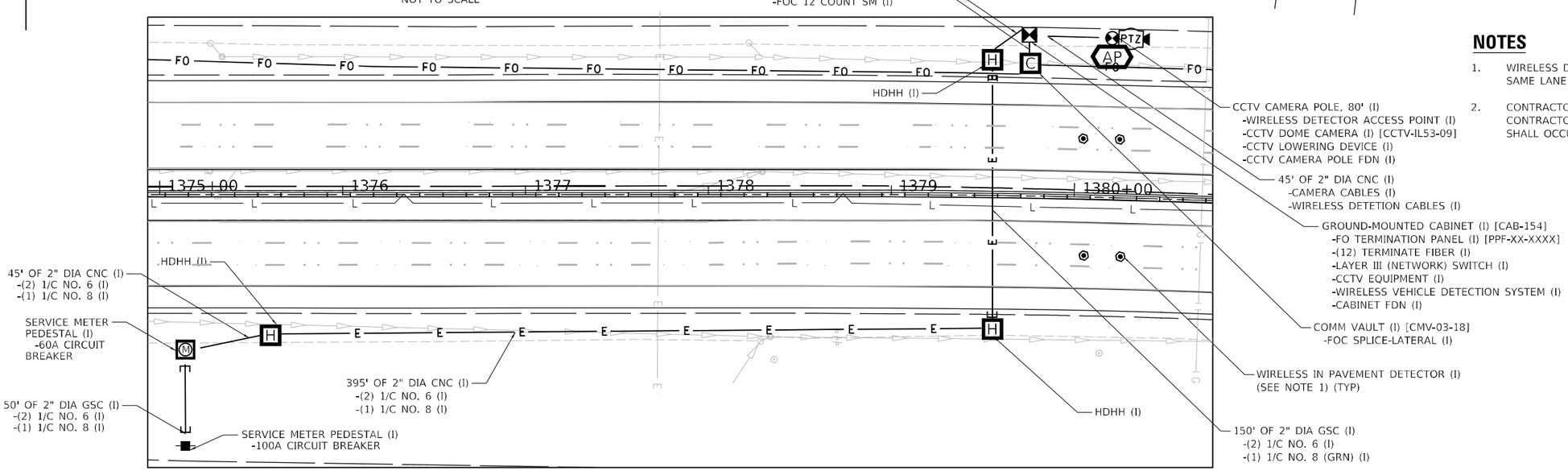

NOTES

1. WIRELESS DETECTION SENSORS SHALL BE CENTERED IN THE SAME LANE AND SHALL BE 20' APART.
2. CONTRACTOR SHALL COORDINATE WITH ADJACENT CONTRACTOR ON TIMING OF WHEN THE MAINLINE SPLICE SHALL OCCUR.

ITS–42

MODEL: Default
FILE NAME: S:\JOL\6300-6399\6346\13\Drawings\CAD\Micro-SS4\CAD_Sheets\D167V38-sh-ITS-installation-15-L53-S4L.dgn

STRAND ASSOCIATES®
1170 SOUTH HOUBOLT ROAD
JOLIET, ILLINOIS 60431
(815) 744-4200

USER NAME = Jaker	DESIGNED - RRS	REVISED -	
	DRAWN - JLN	REVISED -	
PLOT SCALE = 100.0000 ' / in.	CHECKED - BMS	REVISED -	
PLOT DATE = 8/26/2024	DATE - 8/23/2024	REVISED -	

STATE OF ILLINOIS
DEPARTMENT OF TRANSPORTATION

IL ROUTE 53
ITS INSTALLATION PLAN

SCALE: 1" = 50' | SHEET 19 OF 19 SHEETS | STA. 1360+00.00 TO STA. 1370+00.00

F.A.P. RTE.	SECTION	COUNTY	TOTAL SHEETS	SHEET NO.
342	(531) BR 23	COOK	1211	643
		CONTRACT NO. 62W38		
		ILLINOIS	FED. AID PROJECT	

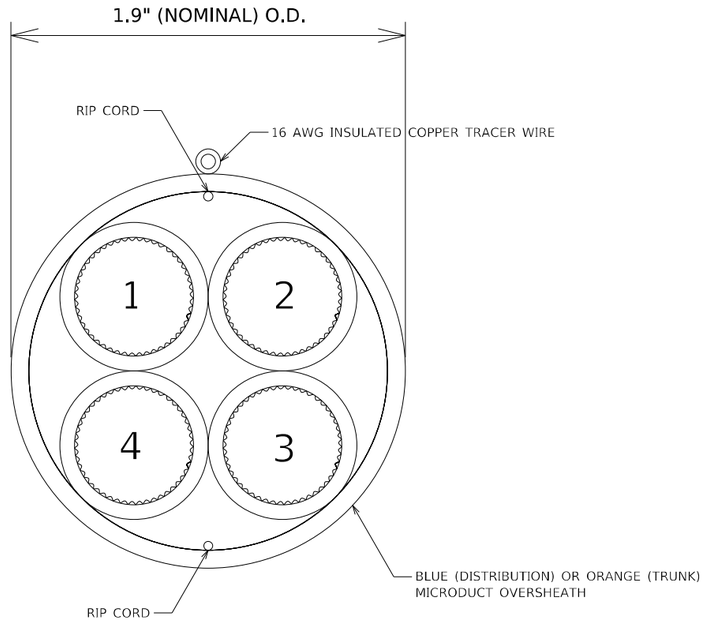

IDOT MICRODUCT DETAIL

BLUE (DISTRIBUTION) MICRODUCT

CELL NO.	CELL COLOR	CELL ALLOCATION
1	BLUE	144 IDOT (DCF)
2	ORANGE	SPARE
3	GREEN	SPARE
4	BROWN	SPARE

ORANGE (TRUNK) MICRODUCT

CELL NO.	CELL COLOR	CELL ALLOCATION
1	BLUE	SPARE
2	ORANGE	144 IDOT (TCF)
3	GREEN	SPARE
4	BROWN	SPARE

IDOT MICRODUCT CELL INFORMATION

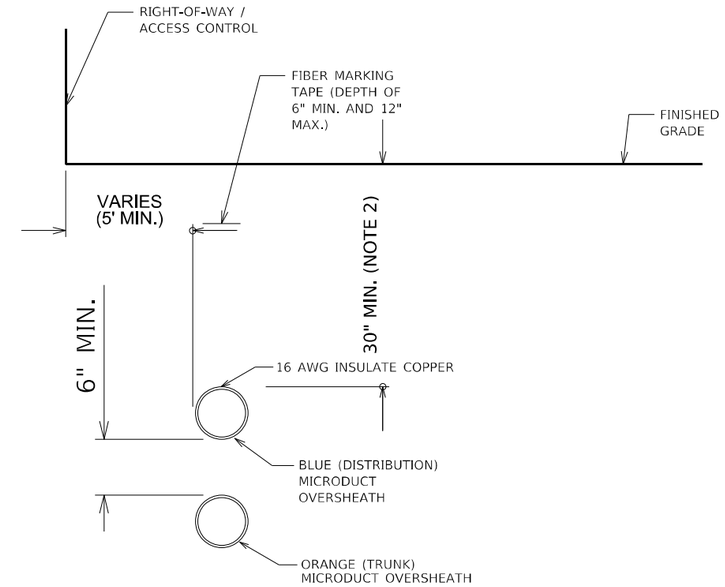

IL RTE 53 SOUTHBOUND TYPICAL CONDUIT SECTION

NOTES

1. GREATER DEPTH MAY BE REQUIRED IN CERTAIN SITUATIONS, INCLUDING, BUT NOT LIMITED TO: ENTERING HANDHOLES/VAULTS, UTILITY AVOIDANCE, CROSSING BENEATH BOX CULVERTS.

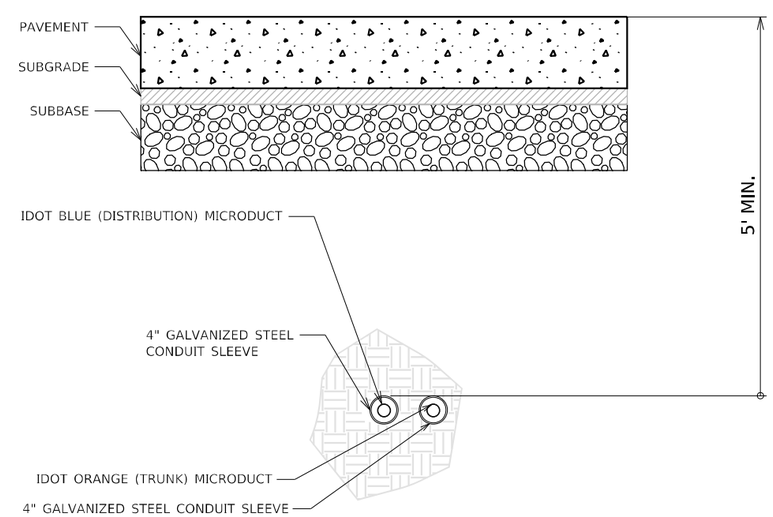

BORED CONDUIT UNDER ROADWAY

ITS–43

MODEL: Default
FILE NAME: S:\JO\6300-6399\6348\113\Drawings\CAD\Micros-SSA\CAD_Sheets\D162W38-IH-ITS-Details-0241-53-S46.dgn

STRAND ASSOCIATES®
1170 SOUTH HOUBOLT ROAD
JOLIET, ILLINOIS 60431
(815) 744-4200

USER NAME = jaker	DESIGNED - RRS	REVISED -	
	DRAWN - JLN	REVISED -	
PLOT SCALE = 100.0000 ' / in.	CHECKED - BMS	REVISED -	
PLOT DATE = 8/26/2024	DATE - 8/23/2024	REVISED -	

STATE OF ILLINOIS
DEPARTMENT OF TRANSPORTATION

ITS INFRASTRUCTURE DETAILS
MICRODUCT AND CONDUIT ROUTING

SCALE: | SHEET OF SHEETS | STA. TO STA.

F.A.P. RTE.	SECTION	COUNTY	TOTAL SHEETS	SHEET NO.
342	(531) BR 23	COOK	1211	644
		CONTRACT NO. 62W38		
		ILLINOIS	FED. AID PROJECT	

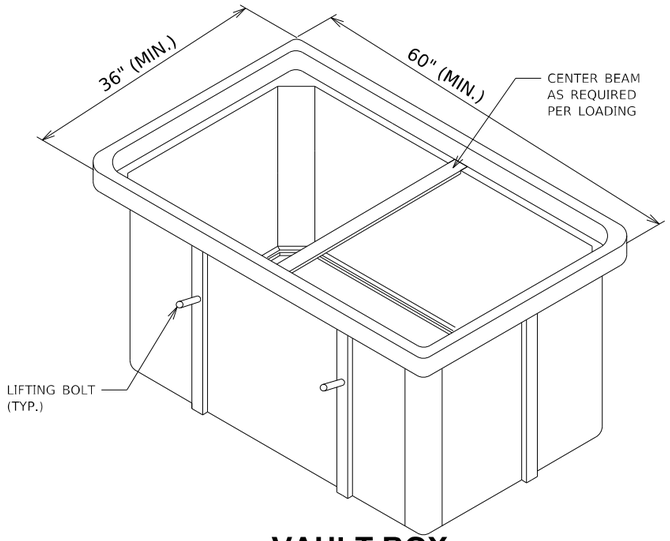

VAULT BOX ISOMETRIC VIEW

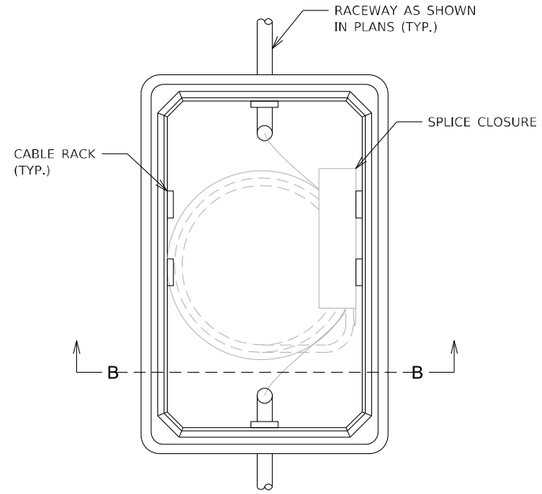

TOP VIEW

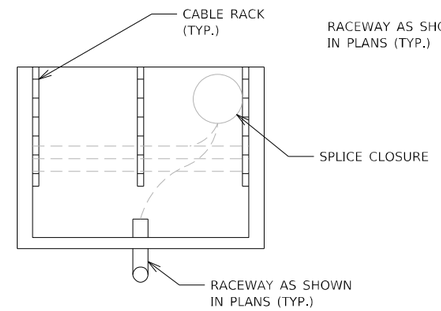

SECTION B-B

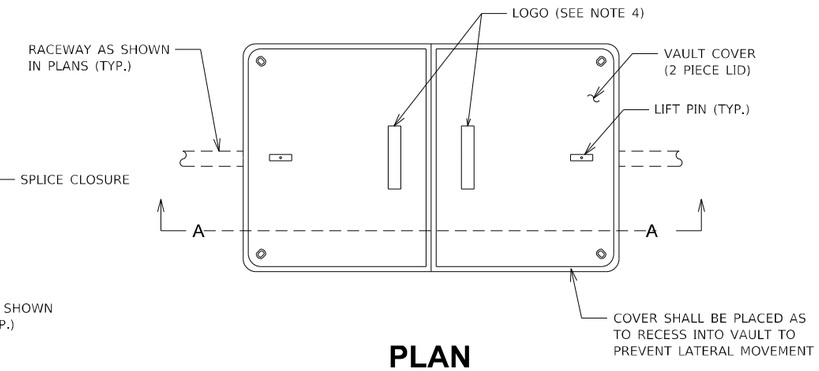

PLAN

NOTES:

1. GROUND ROD, 1-1/2" CONDUIT, #6 AWG GROUND WIRE, LOCATE POST AND ASSOCIATED WORK ARE INCLUDED AS PART OF COMMUNICATIONS VAULT AND WILL NOT BE PAID FOR SEPARATELY. ALL MATERIALS FOR MECHANICAL CONNECTION SHALL BE UL LISTED AND INSTALLED PER NEC ARTICLE 250.
2. #16 AWG TRACER CABLE SHALL BE SPLICED TO THE #16 AWG TRACER CABLE ON THE OUTSIDE OF THE MICRODUCT USING A WATERPROOF SPLICE KIT AS RECOMENDED BY THE MICRODUCT MANUFACTURER. THE #16 AWG WIRE, SPLICE KIT AND ASSOCIATED WORK ARE INCLUDED AS PART OF COMMUNICATIONS VAULT AND WILL NOT BE PAID FOR SEPARATELY.
3. A WATERPROOF MICRODUCT PLUG(S) OR INNERDUCT PLUG SHALL BE INSTALLED AROUND EACH MICRODUCT OR INNERDUCT TO SEAL AROUND THE DUCT FOR ALL MICRODUCTS OR INNERDUCTS COMING INTO THE VAULT. THE PLUGS SHALL BE APPROPRIATELY SIZED AND INSTALLED AS RECOMMENDED BY THE MANUFACTURER AND IS INCLUDED AS PART OF THE MICRODUCT OR INNERDUCT PAY ITEM AND WILL NOT BE PAID SEPARATELY.
4. IDOT COMMUNICATIONS VAULTS SHALL HAVE A PERMANENTLY RECESSED LOGO THAT READS "IDOT".
5. COMMUNICATIONS VAULT SHALL HAVE AN OPEN BASE. ALL CONDUITS AS SHOWN ON THE PLANS SHALL ENTER THE VAULT VIA THE OPEN BASE.
6. ALL DIMENSIONS ARE MINIMUM AND A LARGER SIZE VAULT MAY BE USED, WITH THE APPROVAL OF THE ENGINEER, TO FACILITATE USING A MANUFACTURER'S STANDARD PRODUCT.

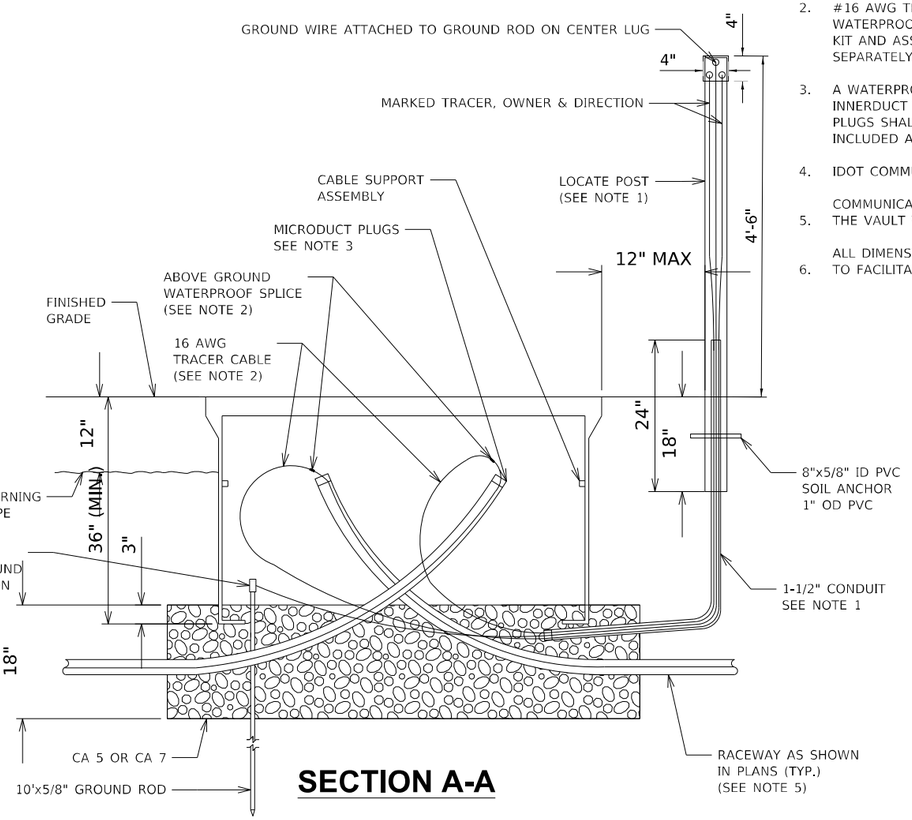

SECTION A-A

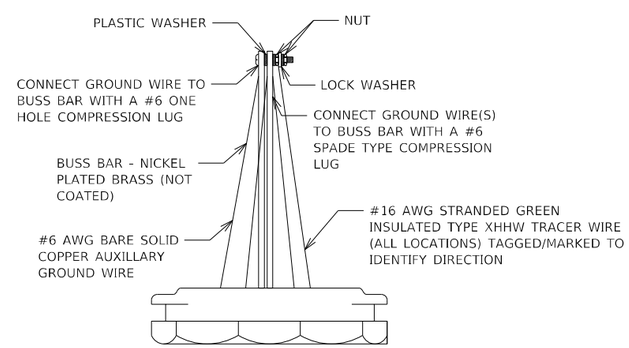

LOCATE POST TOP HAT BOND PLATE

N.T.S.

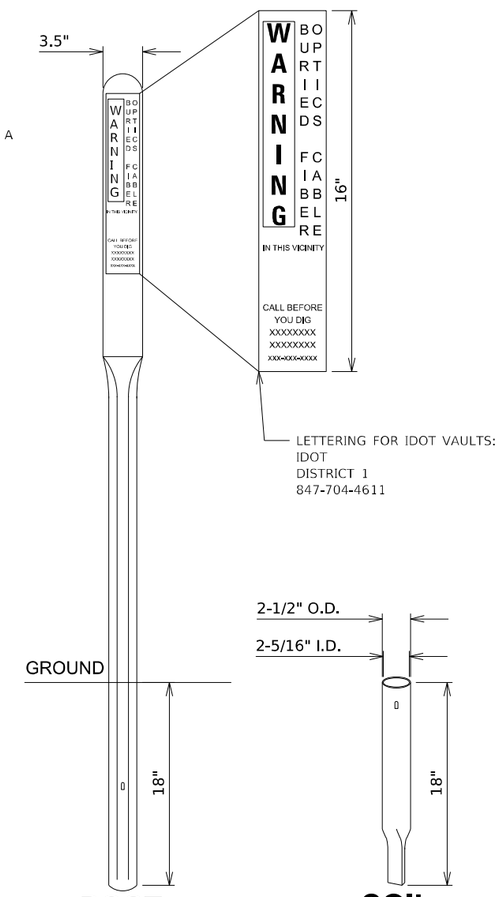

POST

SOIL ANCHOR

ITS–44

STRAND ASSOCIATES®
1170 SOUTH HOUBOLT ROAD
JOLIET, ILLINOIS 60431
(815) 744-4200

USER NAME = jaker	DESIGNED - RRS	REVISED -	
	DRAWN - JLN	REVISED -	
PLOT SCALE = 100.0000 ' / in.	CHECKED - BMS	REVISED -	
PLOT DATE = 8/26/2024	DATE - 8/23/2024	REVISED -	

STATE OF ILLINOIS
DEPARTMENT OF TRANSPORTATION

ITS INFRASTRUCTURE DETAILS
COMMUNICATION VAULT

SCALE: SHEET OF SHEETS STA. TO STA.

F.A.P. RTE.	SECTION	COUNTY	TOTAL SHEETS	SHEET NO.
342	(531) BR 23	COOK	1211	645
		CONTRACT NO. 62W38		
		ILLINOIS	FED. AID PROJECT	

MODEL: Default
FILE NAME: $USO\63000-63996\34611\3Drawings\CAD\Micros-SSA\CAD_Sheets\D162W38-sht-ITS-Details-04-33-54.dgn

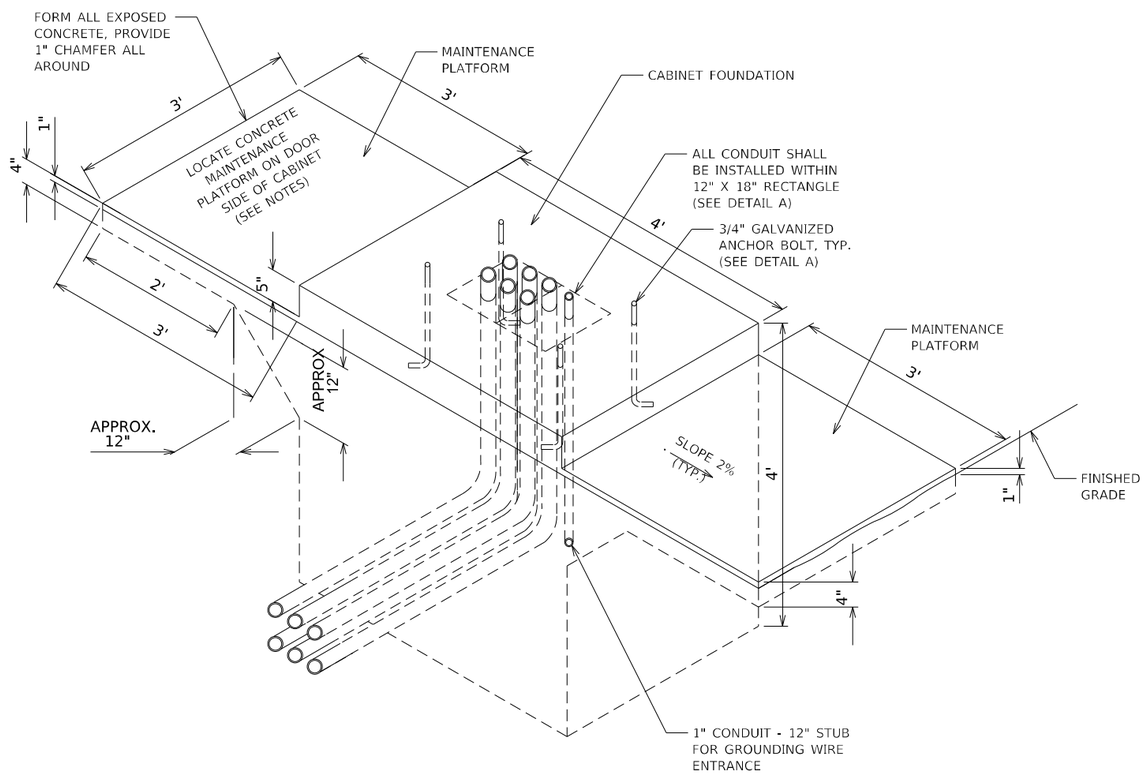

CONCRETE FOUNDATION FOR SURVEILLANCE CABINET MODEL 334 ELEVATION VIEW

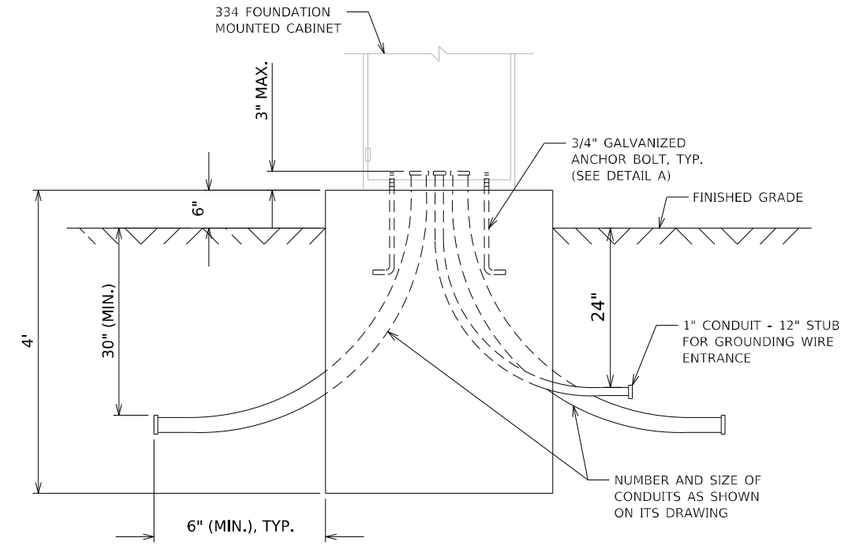

CONCRETE FOUNDATION FOR SURVEILLANCE CABINET MODEL 334 ELEVATION VIEW

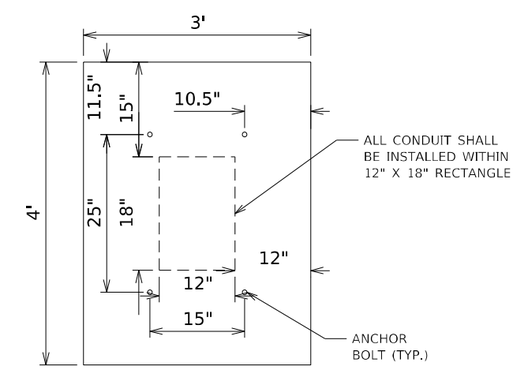

DETAIL A CABINET FOUNDATION ANCHOR BOLT AND CONDUIT LAYOUT

NOTES

1. INSTALL FOUR 3/4 INCH DIAMERTER X 12 INCH MINIMUM LENGTH APPROVED J-BOLTS TO ANCHOR THE FUTURE CABINET BASES. THE ANCHOR BOLTS SHALL BE HOT-DIPPED GALVANIZED STEEL AND LOCATED AS SHOWN IN DETAIL A.
2. CONTROL CABINET BASE TOP SURFACES SHALL BE TROWEL FINISHED AND LEVEL. LEVELING OF TOP SURFACES AFTER CONCRETE BASE HAS CURED SHALL ONLY BE ACCOMPLISHED BY GRINDING.
3. MAINTENANCE PLATFORMS ARE NOT REQUIRED WHEN THE SURROUNDING AREA IS PAVED.
4. CONCRETE FORM DEPTH BELOW FINISHED GRADE SHALL BE 6" MAXIMUM. CONCRETE FORMS SHALL BE REMOVED AFTER CONCRETE HAS SET.
5. CONCRETE MAINTENANCE PLATFORM AND CABINET FOUNDATION FOR CABINET SHALL BE MONOLITHIC POUR.
6. WHEN REQUIRED TO CONNECT NONMETALLIC CONDUIT TO METALLIC CONDUIT, ONLY ADAPTER FITTINGS, U.L. LISTED FOR ELECTRICAL USE, SHALL BE USED.
7. CONDUIT HEIGHT ABOVE THE CONCRETE BASE SHALL BE 3 INCHES.
8. MINIMUM BENDING RADIUS OF CONDUIT = 6 X THE DIAMETER
9. ALL METALLIC CONDUIT ENDS SHALL BE REAMED AND THREADED.
10. CAP ALL BELOW GRADE METALLIC CONDUIT ENDS IN WHICH WIRE OR CABLE IS NOT BEING INSTALLED.
11. PLUG ALL BELOW GRADE NONMETALLIC CONDUIT ENDS IN WHICH WIRE OR CABLE IS NOT BEING INSTALLED.
12. ALL CONDUIT ENDS AT THE TOP OF CONCRETE BASES SHALL BE CAPPED IF METALLIC OR PLUGGED IF NONMETALLIC IMMEDIATELY AFTER PLACEMENT AND BEFORE CONCRETE IS POURED. CONDUITS IN WHICH WIRE OR CABLE IS NOT BEING INSTALLED SHALL REMAIN CAPPED OR PLUGGED.
13. ALL METALLIC CONDUIT ENDS AT TOP OF CONCRETE BASES SHALL HAVE BUSHINGS AND ALL NONMETALLIC CONDUIT ENDS AT TOP OF CONCRETE BASES SHALL HAVE END BELLS.
14. REFER TO SPECIAL PROVISIONS FOR ADDITIONAL REQUIREMENTS.
15. THE CONTRACTOR SHALL INSTALL INSULATED BUSHINGS AND DUCT SEALANT AT ALL CONDUIT BEND TERMINATIONS IN FOUNDATIONS.
16. CONCRETE BASE TO BE FORMED AT LEAST 6" ABOVE THE GROUND SURFACE.

STRAND ASSOCIATES
1170 SOUTH HOUBOLT ROAD
JOLIET, ILLINOIS 60431
(815) 744-4200

USER NAME = jaker	DESIGNED - RRS	REVISED -	
	DRAWN - JLN	REVISED -	
PLOT SCALE = 100.0000 ' / in.	CHECKED - BMS	REVISED -	
PLOT DATE = 8/26/2024	DATE - 8/23/2024	REVISED -	

STATE OF ILLINOIS
DEPARTMENT OF TRANSPORTATION

ITS INFRASTRUCTURE DETAILS
CONCRETE FOUNDATION, SURVEILLANCE CABINET MODEL 334

SCALE: | SHEET OF SHEETS | STA. TO STA.

F.A.P. RTE.	SECTION	COUNTY	TOTAL SHEETS	SHEET NO.
342	(531) BR 23	COOK	1211	646

CONTRACT NO. 62W38
ILLINOIS | FED. AID PROJECT

MODEL: Default
FILE NAME: S:\JOB\6300-6399\6346\13\Drawings\CAD\Micro-SS4\CAD_Sheets\D167V38-IH-ITS-Details-0424-53-S4L.dgn

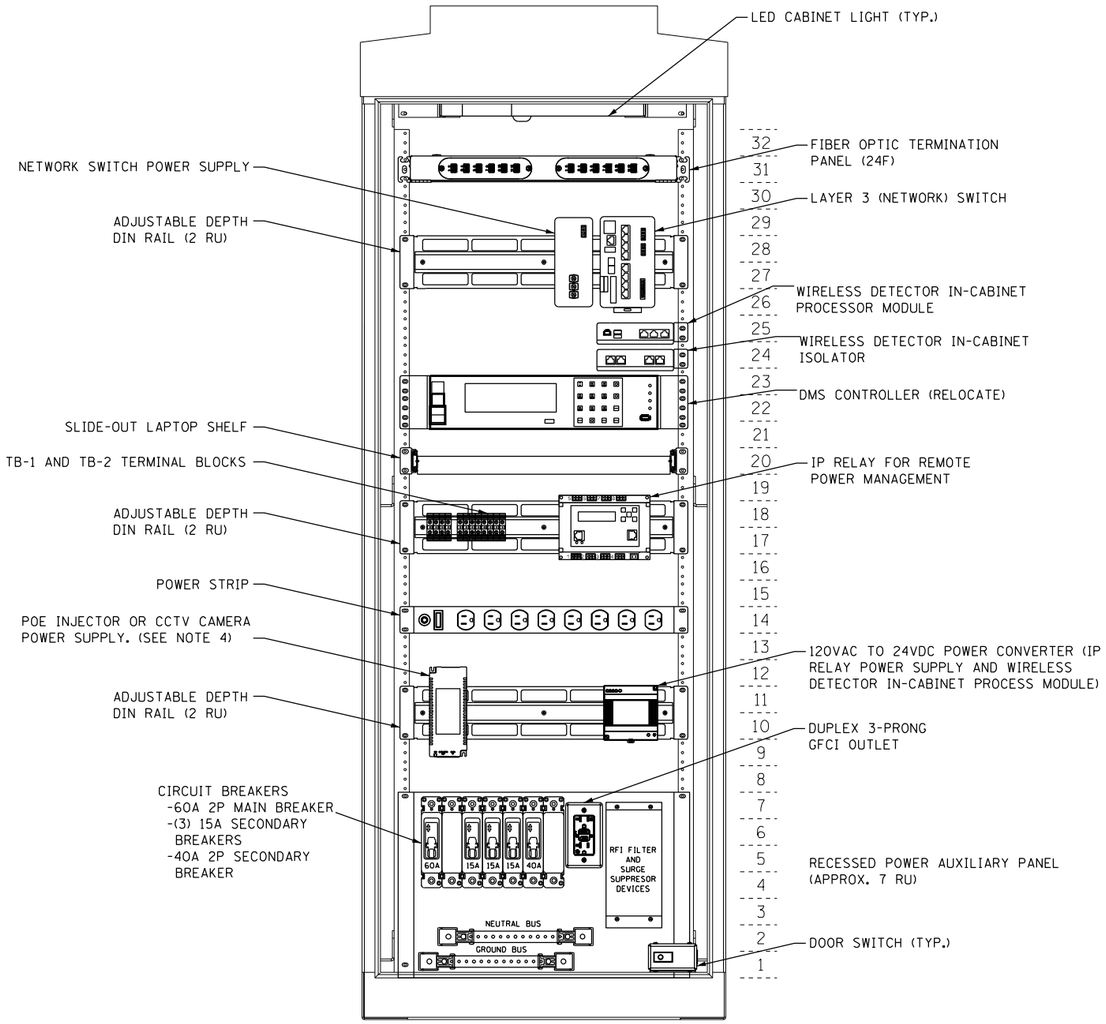

DMS, CCTV, AND WIRELESS VEHICLE DETECTION SYSTEM SUGGESTED CABINET LAYOUT

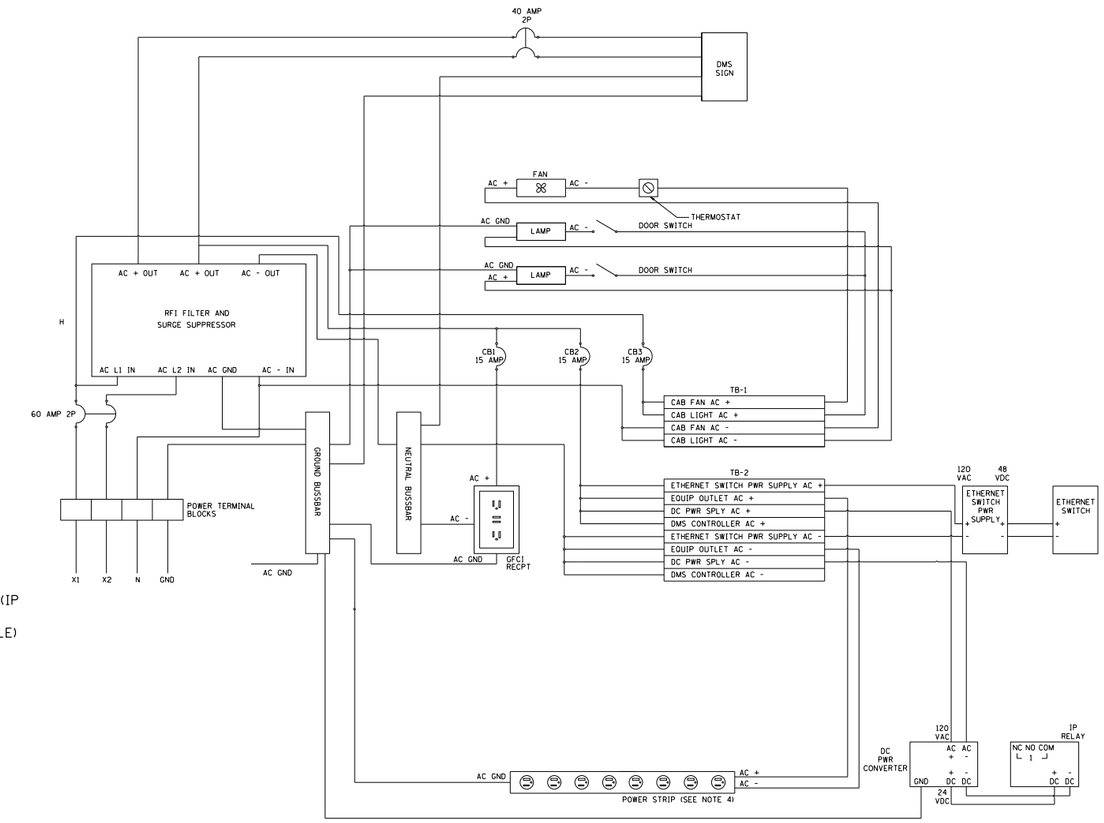

CABINET POWER DISTRIBUTION SINGLE LINE DIAGRAM

NOTES:

1. CONTRACTOR SHALL BE RESPONSIBLE FOR FINAL CABINET LAYOUT. AUXILIARY PANEL SIZING SHALL BE COORDINATED WITH CABINET MANUFACTURER.

2. CABINET FAN AND THERMOSTAT NOT SHOWN FOR CLARITY. CABINET MANUFACTURER SHALL DETERMINE FINAL LOCATIONS.

3. POWER DISTRIBUTION SINGLE LINE DIAGRAM SHOWS POWER CONFIGURATION FOR CCTV CAMERAS WITH POE. CONTRACTOR SHALL ADJUST POWER WIRING AS REQUIRED FOR A CCTV CAMERA WITH SEPARATE POWER SUPPLY.

4. POWER IS PROVIDED TO EQUIPMENT THROUGH POWER STRIP. EQUIPMENT IS NOT SHOWN ON CABINET POWER DISTRIBUTION SINGLE LINE DIAGRAM FOR CLARITY

ITS–46

STRAND ASSOCIATES®
1170 SOUTH HOUBOLT ROAD
JOLIET, ILLINOIS 60431
(815) 744-4200

USER NAME = jaker	DESIGNED - RRS	REVISED -	
	DRAWN - JLN	REVISED -	
PLOT SCALE = 100.0000 ' / in.	CHECKED - BMS	REVISED -	
PLOT DATE = 8/26/2024	DATE - 8/23/2024	REVISED -	

STATE OF ILLINOIS
DEPARTMENT OF TRANSPORTATION

DMS, CCTV, AND WIRELESS VEHICLE DETECTION SYSTEM

SCALE: SHEET OF SHEETS STA. TO STA.

F.A.P. RTE.	SECTION	COUNTY	TOTAL SHEETS	SHEET NO.
342	(531) BR 23	COOK	1211	647
BE–1100		CONTRACT NO. 62W38		
		ILLINOIS	FED. AID PROJECT	

MODEL: Default
FILE NAME: S:\0L\6300-6399\6346\113\Drawings\CADD\Micro-SS4\CAD_Sheets\D162W38-tH-ITS-Details-04-13-S4.dgn

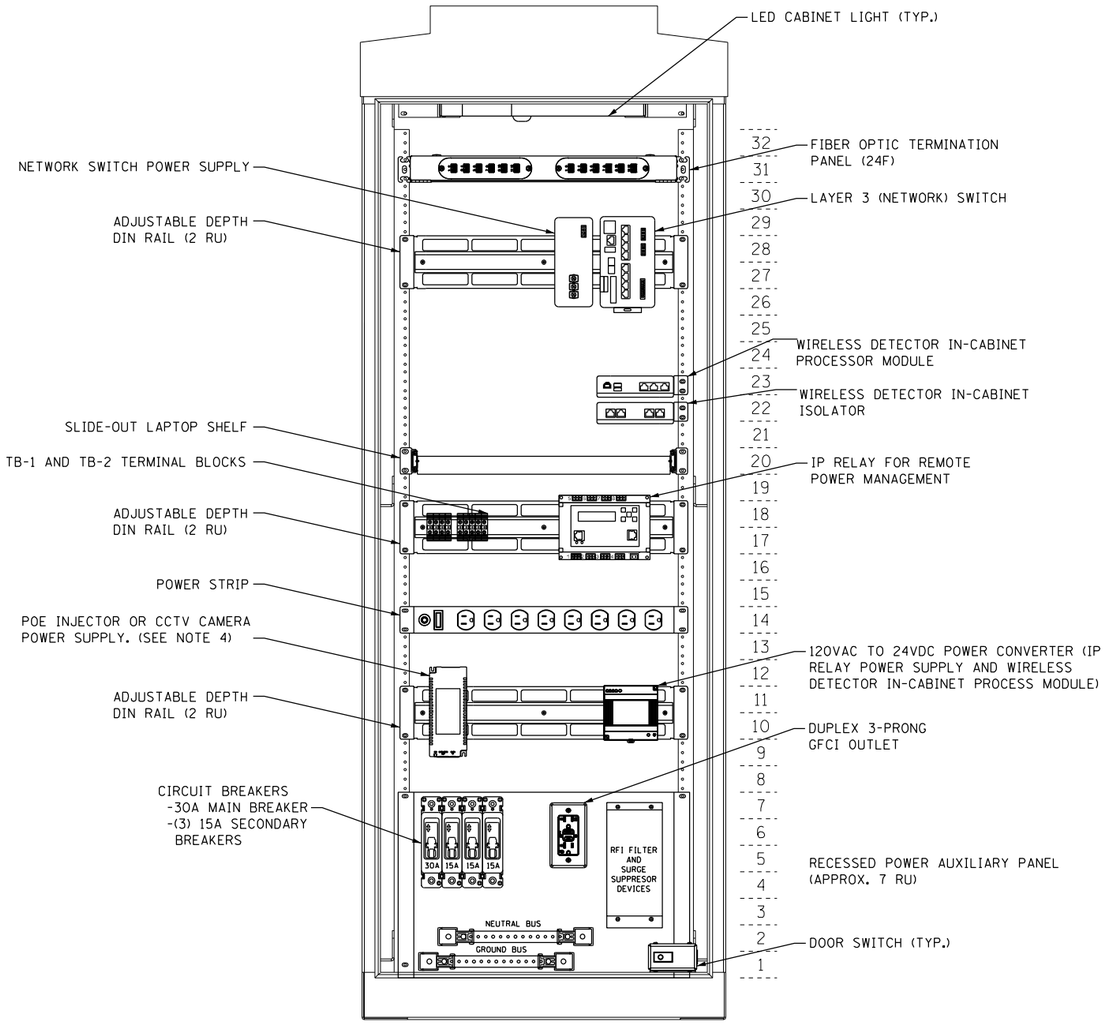

CCTV AND WIRELESS VEHICLE DETECTION SYSTEM SUGGESTED CABINET LAYOUT

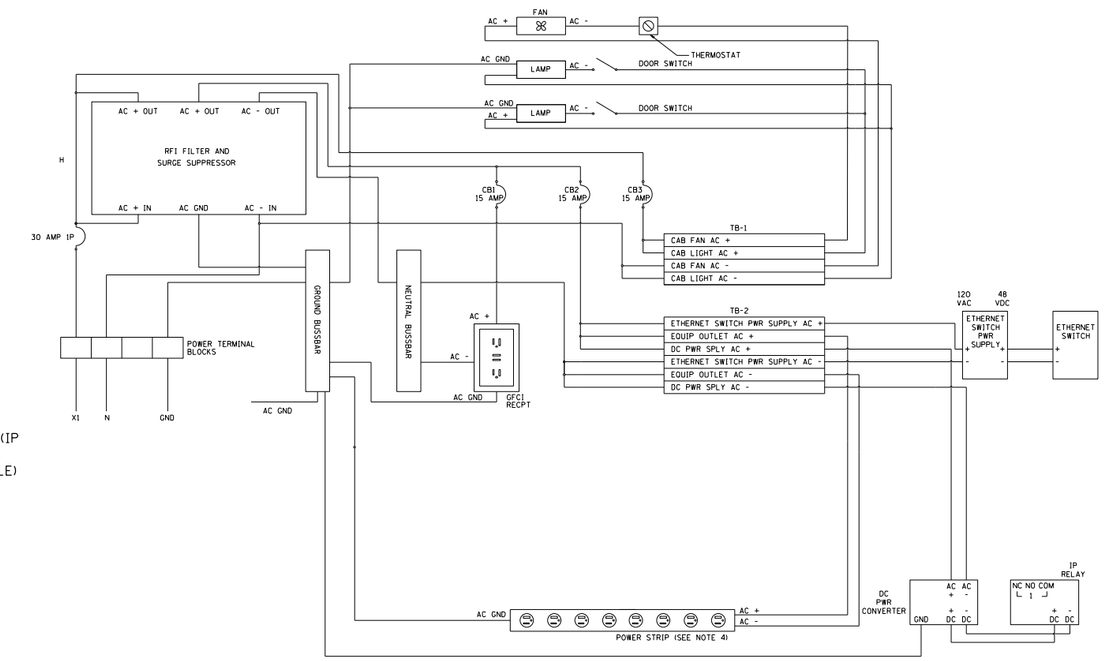

CABINET POWER DISTRIBUTION SINGLE LINE DIAGRAM

NOTES:

1. CONTRACTOR SHALL BE RESPONSIBLE FOR FINAL CABINET LAYOUT. AUXILIARY PANEL SIZING SHALL BE COORDINATED WITH CABINET MANUFACTURER.

2. CABINET FAN AND THERMOSTAT NOT SHOWN FOR CLARITY. CABINET MANUFACTURER SHALL DETERMINE FINAL LOCATIONS.

3. POWER DISTRIBUTION SINGLE LINE DIAGRAM SHOWS POWER CONFIGURATION FOR CCTV CAMERAS WITH POE. CONTRACTOR SHALL ADJUST POWER WIRING AS REQUIRED FOR A CCTV CAMERA WITH SEPARATE POWER SUPPLY.

4. POWER IS PROVIDED TO EQUIPMENT THROUGH POWER STRIP. EQUIPMENT IS NOT SHOWN ON CABINET POWER DISTRIBUTION SINGLE LINE DIAGRAM FOR CLARITY

ITS–47

STRAND ASSOCIATES®
1170 SOUTH HOUBOLT ROAD
JOLIET, ILLINOIS 60431
(815) 744-4200

USER NAME = jaker	DESIGNED - RRS	REVISED -	
	DRAWN - JLN	REVISED -	
PLOT SCALE = 100.0000 ' / in.	CHECKED - BMS	REVISED -	
PLOT DATE = 8/26/2024	DATE - 8/23/2024	REVISED -	

STATE OF ILLINOIS
DEPARTMENT OF TRANSPORTATION

CCTV AND WIRELESS VEHICLE DETECTION SYSTEM

SCALE: SHEET OF SHEETS STA. TO STA.

F.A.P. RTE.	SECTION	COUNTY	TOTAL SHEETS	SHEET NO.
342	(531) BR 23	COOK	1211	648
		CONTRACT NO. 62W38		
		ILLINOIS FED. AID PROJECT		

MODEL: Default
FILE NAME: S:\DL\6300-6399\6346\13\Drawings\CADd\Micro-SS4\CAD_Sheets\D162W38-tH-ITS-Details-04-13-S4.dgn

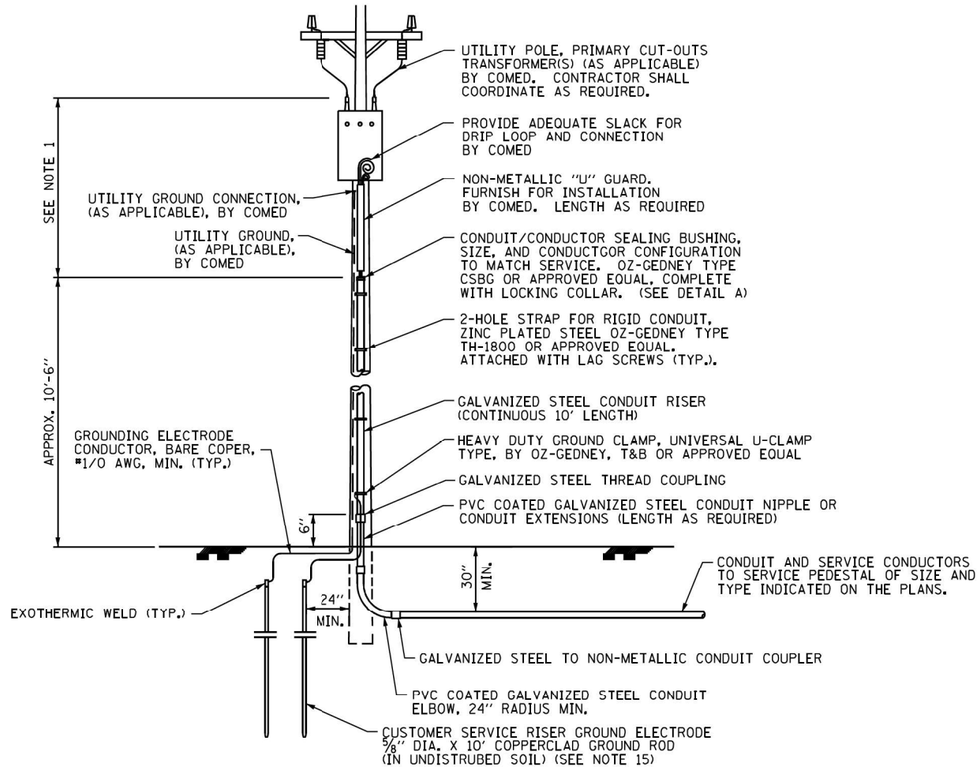

UTILITY SERVICE POLE

NOTES:

1. ASCERTAIN AND ASSURE CLEARANCE FROM UTILITY SECONDARY SPACE AS APPLICABLE.
2. CABINET SHALL BE FABRICATED ALUMINUM NEMA TYPE 3R WITH MINIMUM THICKNESS OF 0.1875", MINIMUM INTERIOR CABINET SPACE SHALL BE 36" X 20"W X 15" D.
3. THE CABINET DOOR SHALL BE HINGED ON THE RIGHT SIDE WHEN FACING THE CABINET. THE DOOR SHALL BE FURNISHED WITH A GASKET THAT SHALL FORM A WEATHER TIGHT SEAL BETWEEN THE CABINET AND DOOR. THE HINGES SHALL BE CONTINUOUS AND BOLTED TO THE CABINET AND DOOR TILIZING 1/4-20 STAINLESS STEEL CARRIAGE BOLTS AND NY-LOCKNUTS. THE HINGES WILL BE MADE OF STAINLESS STEEL WITH A 0.25 INCH (6.35 mm) DIAMETER STAINLESS STEEL HINGE PIN. THE HINGE PIN SHALL BE CAPPED TOP AND BOTTOM BY WELD TO RENDER IT TAMPER PROOF.
4. THE LATCHING MECHANISM SHALL BE A 3 POINT DRAW ROLLER TYPE. THE CENTER CATCH AND PUSHRODS SHALL BE EITHER CADMIUM OR ZINC PLATED, TYPE II CLASS I. PUSHRODS WILL BE TURNED EDGEWISE AT THE OUTWARD SUPPORTS AND SHALL BE 0.25 INCH BY 0.75 INCH, MINIMUM. ROLLERS SHALL HAVE A MINIMUM DIAMETER OF 0.875 INCH ANDWILL BE MADE OF NYLON. THE CENTER CATCH SHALL BE FABRICATED FROM 0.14 INCH (3.55 mm) STEEL, MIMIMUM. WHEN THE DOOR IS CLOSED AND LATCHED, IT WILL BE LOCKED. THE LATCHING HANDLE SHALL HAVE A PROVISION FOR PADLOCKING IN THE CLOSED POSITION. AN OPERATING HANDLE SHALL BE FURNISHED WITH EACH LOCK. THE HANDLE WILL BE STAINLESS STEEL WITH A 0.75 INCH DIAMETER SHANK.
5. CABINET DOOR SHALL NOT HAVE COMPARTMENT DOORS OR LOUVERS.
6. ALL FIELD CABINETS SHALL BE FITTED WITH BRASS LOCKS.
7. POST TOP MOUNTED CABINETS, SHALL HAVE A 0.25 INCH BOTTOM OF CABINET WELDED.
8. METER HOUSING SHALL BE MOUNTED TO BACK WALL OF SERVICE PEDESTAL CABINET.
9. CABLES FROM METER HOUSING SHALL PASS THROUGH BACK WALL OF OF CABINET.
10. CONTRACTOR SHALL COORDINATE WITH PEDESTAL BASE MANUFACTURER AND FURNISH COMPATIBLE ANCHOR BOLTS.
11. ALL EQUIPMENT SHALL BE GROUNDED AND BONDED IN ACCORDANCE WITH NATIONAL ELECTRICAL CODE AND NATIONAL ELECTRICAL SAFETY CODE.
12. UNLESS OTHERWISE INDICATED, ITEMS AND WORK SHOWN ON THIS SHEET SHALL BE INCLUDED UNDER PAY ITEM "ELECTRIC SERVICE INSTALLATION".
13. CONDUIT AND SERVICE CONDUCTORS SHALL BE OF THE SIZE AND TYPE INDICATED ON THE PLANS.
14. PVC COATED RACEWAYS AND ACCESSORIES SHALL BE INSTALLED WITH MANUFACTURER RECOMMENDED TOOLS AND PROCEDURES TO AVOID DAMAGE. ANY DAMAGED COMPONENTS SHALL BE REPLACED AT NO ADDITIONAL COST TO THE DEPARTMENT.
15. THE CONTRACTOR SHALL OBTAIN INSPECTION AND APPROVAL BY THE ENGINEER OF THE SERVICE RISER GROUND ELECTRODE, RISER ELBOW, NIPPLE, AND CONNECTION TO SERVICE CONDUCTOR RACEWAY EXTENSION PRIOR TO BACK FILLING AND SHALL ALSO OBTAIN INSPECTION OF SERVICE RISER AND SEALING BUSHING BEFORE UTILITY "U" GUARD INSTALLATION AND SERVICE CONNECTION.
16. PLANS AND DETAILS INDICATE THE GENERAL NATURE AND REQUIREMENTS OF ELECTRIC SERVICE INSTALLATION. THEY DO NOT SHOW EVERY ACCESSORY AND ATTACHMENT, AND THEY DO NOT RELIEVE THE CONTRACTOR OF THE REQUIREMENTS OF THE SPECIFICATIONS AND SPECIAL PROVISONS IN TO ASCERTAIN UTILITY REQUIREMENTS AND TO COORDINATE ACCORDINGLY. FURNISHING ALL ITEMS AND WORK NOT PROVIDED BY COMED, BUT NECESSARY FOR COMPLETE ELECTRIC SERVICE INSTALLATION IS REQUIRED AND SHALL BE INCLUDED IN PAY ITEM "ELECTRIC SERVICE INSTALLATION".

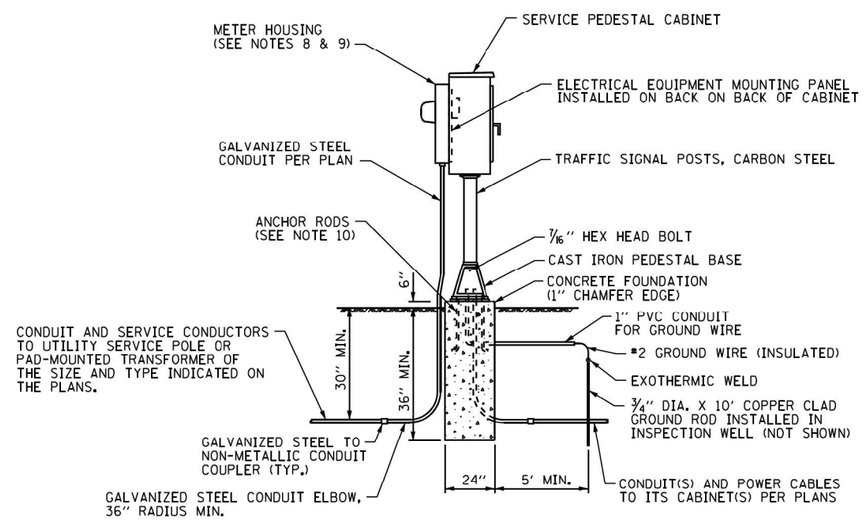

SERVICE PEDESTAL WITH METER

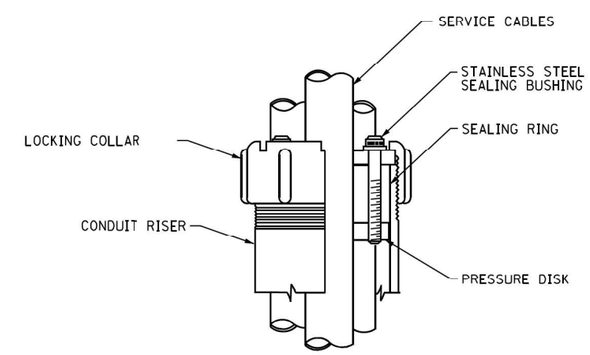

DETAIL A

ITS–48

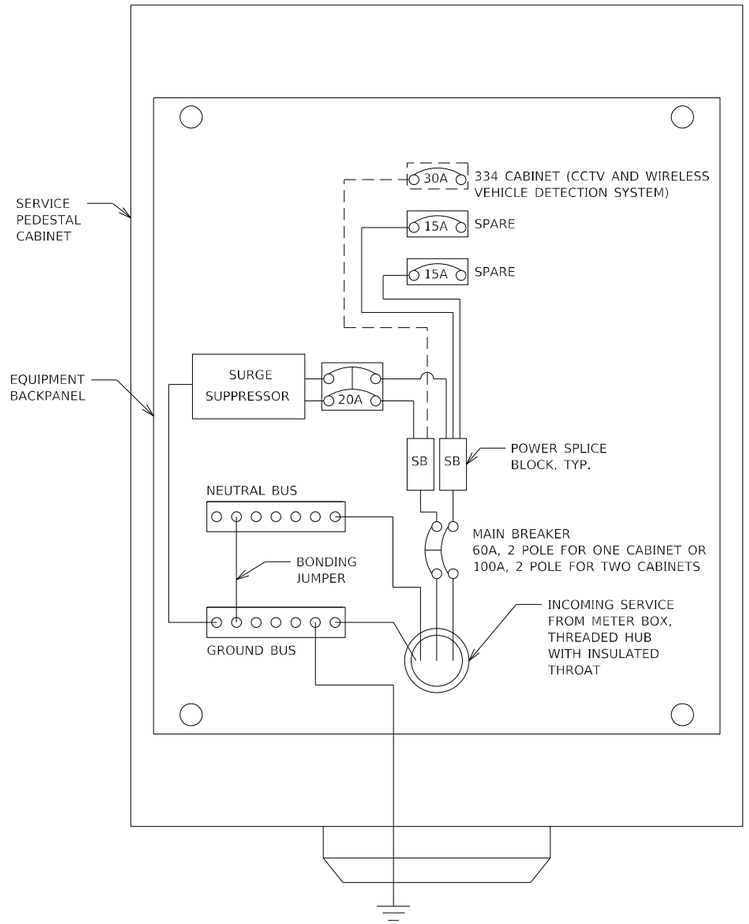

SERVICE PEDESTAL CABINET WIRING AND EQUIPMENT LAYOUT CCTV AND WIRELESS VEHICLE DETECTION SYSTEM

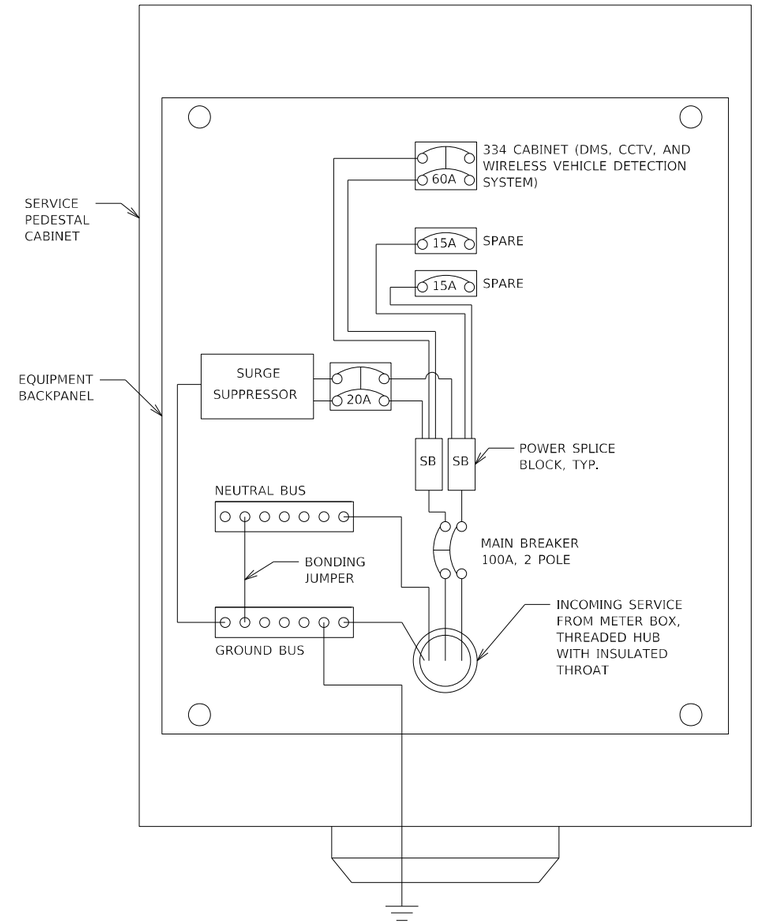

SERVICE PEDESTAL CABINET WIRING AND EQUIPMENT LAYOUT DMS, CCTV, AND WIRELESS VEHICLE DETECTION SYSTEM

NOTES

1. THE ELECTRIC SERVICE EQUIPMENT ASSEMBLY SHALL BE UL LABELED, SUITABLE FOR USE AS SERVICE EQUIPMENT.

2. CIRCUIT BREAKERS SHALL BE THERMAL MAGNETIC BOLT-ON TYPE WITH A MINIMUM INTERRUPTING CAPACITY OF 65,000 SYMETRICAL AMPERES AT 240V LINE TO LINE SERVICE OR 14,0000 AT 480V RATED AT LINE TO LINE SERVICE. THEY SHALL BE LOCKABLE IN THE "OFF" POSITION FOR COMPLIANCE WITH OSHA LOCK-OUT/TAG-OUT REQUIREMENTS. HANDLES SHALL BE TRIP FREE.

3. THE SURGE PROTECTOR SHALL BE SUITABLE FOR THE INCOMING SINGLE PHASE 60HZ AC ELECTRICAL SERVICE, WITH A SURGE CURRENT RATING OF 50,00 AMPS OR BETTER, RATED -40 TO 65 DEGREES C., WITH LED OPERATING IDICATORS, AND SHALL BE UL LISTED PER UL 1449. SURGE PROTECTOR SHALL BE WIRED FOR THE INCOMING SERVICE VOLTAGE. FOLLOW MANUFACTURER RECOMMENDED WIRING SPECIFICATIONS.

4. BUS BARS, CONNECTORS AND LUGS SHALL BE COPPER, INSULATED AND ISOLATED AND CONFIGURED TO PREVENT SHORTED CONDITIONS FROM TIGHTENING TERMINATIONS, ETC. THE OVERALL BUS SECTION SHALL BE CONFIGURED BEHIND AN INSULATING BARRIER SHIELD WHICH IS REMOVABLE FOR ACCESS TO CONNECTIONS.

5. THE COMBINATION GROUND AND NEUTRAL BAR SHALL BE CONFIGURED WITH SEPARATE GROUND AND NEUTRAL SECTIONS AND SPARE TERMINALS AS INDICATED. THE HEADS OF GROUND SCREWS SHALL BE PAINTED GREEN. THE HEADS OF NEUTRAL SCREWS SHALL BE PAINTED WHITE.

6. A PLASTIC LAMINATED CABINET LAYOUT DIAGRAM, CIRCUIT SCHEMATIC, AND BILL OF MATERIALS WITH CATALOG NUMBERS USED SHALL BE AFFIXED TO THE INTERIOR SIDE OF THE ENCLOSURE DOOR.

7. EQUIPMENT IN DIAGRAMS ABOVE ARE NOT TO SCALE AND WIRING SCHEMATIC IS DIAGRAMMATIC. CONTRACTOR TO SUBMIT WIRING DIAGRAM AND EQUIPMENT LAYOUT FOR APPROVAL BY THE ENGINEER.

8. PROVIDE ADDITIONAL 30A 1 POLE BREAKER WHERE TWO 334 CABINETS ARE FED FROM THE SERVICE PEDESTAL

STRAND ASSOCIATES®
1170 SOUTH HOUBOLT ROAD
JOLIET, ILLINOIS 60431
(815) 744-4200

USER NAME = jaker	DESIGNED - RRS	REVISED -	
	DRAWN - JLN	REVISED -	
PLOT SCALE = 100.0000 ' / in.	CHECKED - BMS	REVISED -	
PLOT DATE = 8/26/2024	DATE - 8/23/2024	REVISED -	

STATE OF ILLINOIS
DEPARTMENT OF TRANSPORTATION

ELECTRIC SERVICE INSTALLATION DETAILS
SHEET 2 OF 2

SCALE: | SHEET 2 OF 2 SHEETS | STA. | TO STA.

F.A.P. RTE.	SECTION	COUNTY	TOTAL SHEETS	SHEET NO.
342	(531) BR 23	COOK	1211	650
		CONTRACT NO. 62W38		
		ILLINOIS	FED. AID PROJECT	

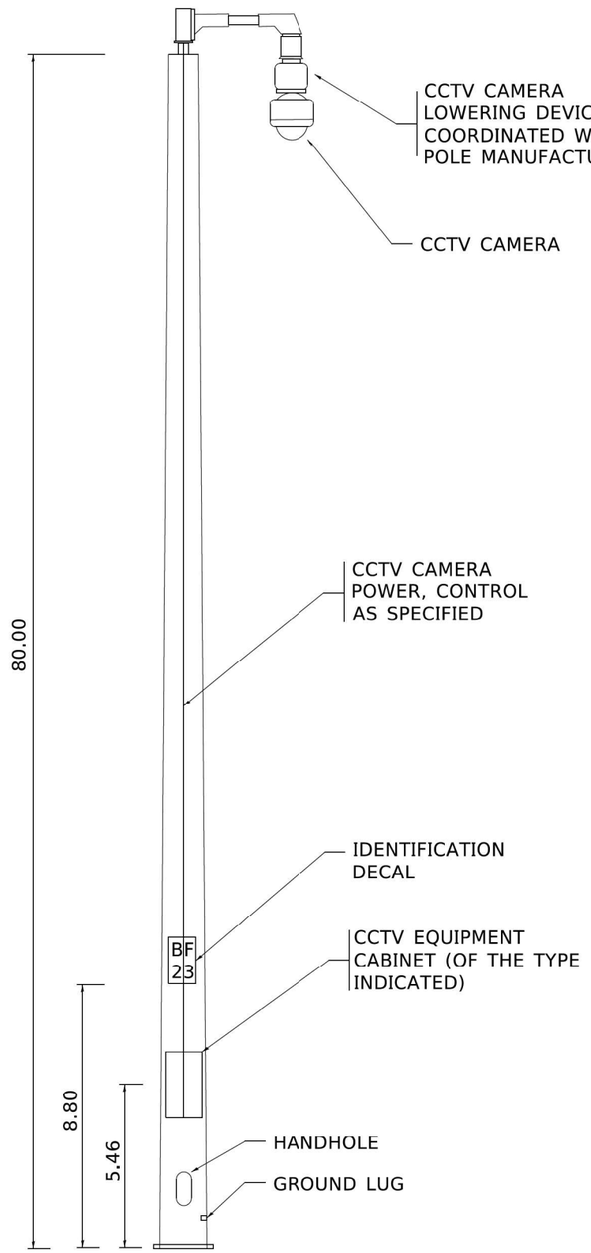

ELEVATION

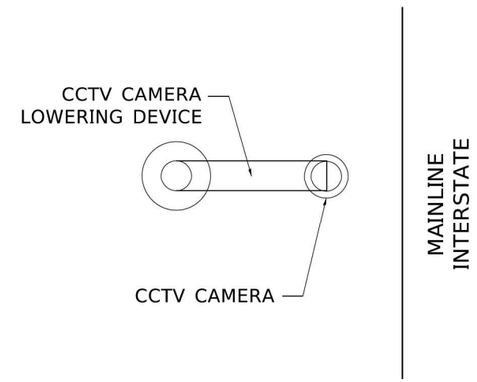

TOP VIEW

GENERAL NOTES:

1. LOCATIONS OF THE CCTV CAMERA INSTALLATIONS ARE APPROXIMATE. THE CONTRACTOR MAY ADJUST THE LOCATIONS OF THE INSTALLATIONS TO FACILITATE INSTALLATION WITH WRITTEN APPROVAL OF THE RESIDENT ENGINEER AND THE ELECTRICAL DESIGN SECTION. ALL STANDARD NON-FRANGIBLE SETBACK REQUIREMENTS AS WELL AS CLEAR ZONE REQUIREMENTS SHALL BE MAINTAINED.
2. THE POLE SHALL BE A MAXIMUM OF THREE SECTIONS FOR FIELD ASSEMBLY.
3. THE POLE SHAFTS SHALL BE A ROUND CROSS SECTION. THE BOTTOM SECTION SHALL HAVE A MINIMUM .3125 WALL THICKNESS AND A MINIMUM DIAMETER THE TOP AND BOTTOM TO PREVENT CONDENSATION BUILDUP ON THE INTERIOR OF THE POLE SHAFT.
4. CABLE SUPPORTS SHALL BE PROVIDED FOR ALL CABLES INSIDE OF POLE SO THAT NO CABLE LOADING IS EXCEEDED. CALCULATIONS SHALL BE SUBMITTED FOR THE CABLES BEING FURNISHED.
5. ALL EQUIPMENT SHALL BE GROUNDED.
6. DOCUMENTATION SHALL BE SUBMITTED THAT THE POLE IS FULLY COORDINATED WITH THE CAMERA LOWERING DEVICE.
7. ALL CABLES, INCLUDING LOWERING DEVICE CABLES, SHALL BE WITHIN THE POLE SHAFT. EXTERNAL CABLING WILL NOT BE PERMITTED.
8. UNLESS OTHERWISE INDICATED, OR AS DIRECTED BY THE ENGINEER, THE CAMERA LOWERING DEVICE SHALL BE ORIENTED PERPENDICULAR TO THE MAINLINE INTERSTATE FOR THE LEAST OBSTRUCTED VIEW OF THE INTERSTATE ROADWAY.

MATERIAL REQUIREMENTS		
COMPONENT	ASTM DESIGNATION	MIN. YIELD (KSI)
POLE SHAFT	A572, OR A1011	50
BASE PLATE	A572, OR A1011	50
POLE TOP PLATE	A572, OR A1011	50
ANCHOR BOLTS	F1554	55
GALVANIZING, STRUCTURE	A123	N/A
GALVANIZING, HARDWARE	A153	N/A

ITS–50

MODEL: Default
FILE NAME: pw:\\plannoom.dot.illinois.gov:PWIDOT\Documents\IDOT Offices\District 1\Projects\D145d22x34\CADData\CADsheets\be1002.dgn

STRAND ASSOCIATES®
1170 SOUTH HOUBOLT ROAD
JOLIET, ILLINOIS 60431
(815) 744-4200

USER NAME = footemj	DESIGNED - R. Tomsons	REVISED -	STATE OF ILLINOIS DEPARTMENT OF TRANSPORTATION
	DRAWN -	REVISED -	
PLOT SCALE = 50.0000 ' / in.	CHECKED -	REVISED -	
PLOT DATE = 4/22/2019	DATE - 04/17/2017	REVISED -	

CCTV CAMERA STRUCTURE, 80 FT. MOUNTING HEIGHT

SCALE: NONE | SHEET 1 OF 1 SHEETS | STA. | TO STA.

F.A.P. RTE.	SECTION	COUNTY	TOTAL SHEETS	SHEET NO.
342	(531) BR 23	COOK	1211	651
BE 1002		CONTRACT NO. 62W38		
		ILLINOIS	FED. AID PROJECT	

be1002.dgn 4/22/2019 7:33:04 AM User=footemj

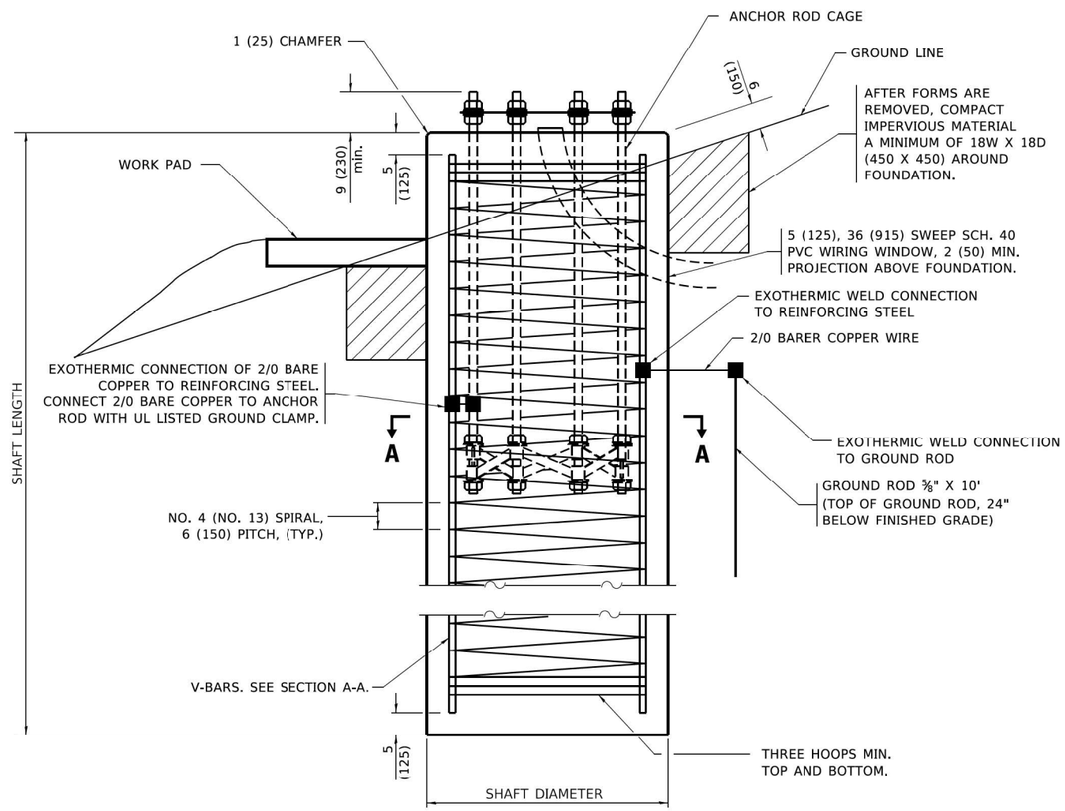

FOUNDATION ELEVATION

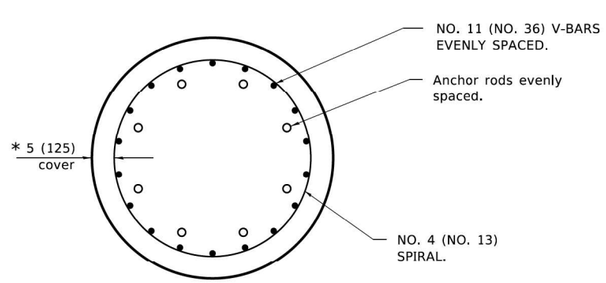

SECTION A–A

* SEE ROD AND REINFORCEMENT TABLE.

SHAFT LENGTH TABLE			
SOIL CONSISTENCY		AVERAGE STRENGTH	HEIGHT
		Qu in tsf (Qu in kPa)	80' (24 m)
Cohesive	SOFT	< 0.5 (< 50)	20'-6" (6.2 m)
	MEDIUM	0.5 to 1 (50 to 100)	17'-0" (5.1 m)
	STIFF	1 to 2 (100 to 200)	14'-6" (4.4 m)
	VERY STIFF	2 to 4 (200 to 400)	13'-0" (3.8 m)
	HARD	> 4 (> 400)	11'-6" (3.5 m)
		N in BLOWS/FT. (N in BLOWS/0.3m)	
Granular	VERY LOOSE	< 5 (< 5)	16'-6" (5.0 m)
	LOOSE	5 to 10 (5 to 10)	15'-0" (4.6 m)
	MEDIUM	10 to 25 (10 to 25)	14'-6" (4.4 m)
	DENSE	25 to 50 (25 to 50)	14'-0" (4.1 m)
	VERY DENSE	> 50 (> 50)	13'-0" (3.9 m)

ITS–51

STRAND ASSOCIATES®
1170 SOUTH HOUBOLT ROAD
JOLIET, ILLINOIS 60431
(815) 744-4200

USER NAME = footemj	DESIGNED - R. Tomsons	REVISED -
	DRAWN -	REVISED -
PLOT SCALE = 50.0000 ' / in.	CHECKED -	REVISED -
PLOT DATE = 4/22/2019	DATE - 04/17/2017	REVISED -

STATE OF ILLINOIS
DEPARTMENT OF TRANSPORTATION

CCTV CAMERA STRUCTURE, 80 FT. MOUNTING HEIGHT
FOUNDATION, SHEET 1 OF 2

SCALE: NONE | SHEET 1 OF 1 SHEETS | STA. | TO STA.

F.A.P. RTE.	SECTION	COUNTY	TOTAL SHEETS	SHEET NO.
342	(531) BR 23	COOK	1211	652
	BE 1003	CONTRACT NO. 62W38		
		ILLINOIS FED. AID PROJECT		

ROD AND REINFORCEMENT TABLE					
TOWER HEIGHT	ANCHOR ROD DIAM. (MIN)	ROD CIRCLE DIAM. (MIN)	TOWER BASE DIAM. (MIN)	DRILLED SHAFT DIAM. (1)	V BAR QTY.
80' (25 m)	1½ (38)	30 (760)	24 (610)	4'-0" (1.2 m)	14

(1) DIAMETER BASED ON A 5 (125) CONC. COVER. THE MIN. COVER SHALL BE 3 (75) IN DRY SHAFT EXCAVATION AND 4 (100) IN A WET HOLE. WHEN ROCK IS ENCOUNTERED A 5 (125) COVER AGAINST SOIL AND A 2 (50) COVER AGAINST ROCK SHALL BE REQUIRED.

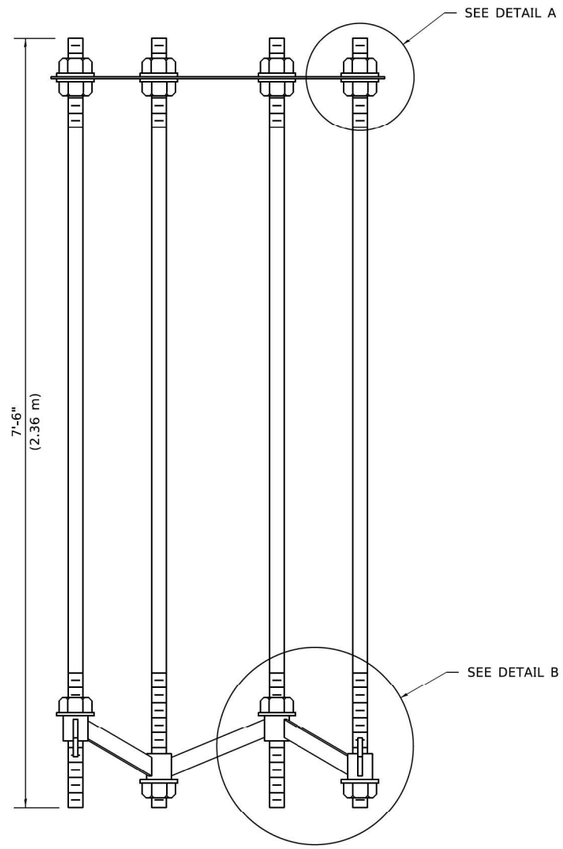

SECTION B–B

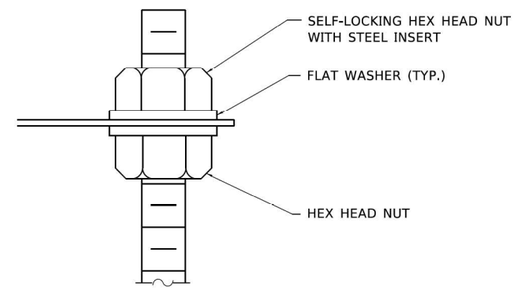

DETAIL A

GENERAL NOTES:

1. ANCHOR ROD QUANTITY, DIAMETER, AND LENGTH SHALL BE DETERMINED BY THE CCTV STRUCTURE MANUFACTURER AND APPROVED BY THE ENGINEER. EACH FOUNDATION SHALL HAVE A MINIMUM OF 8 ANCHOR RODS.
2. ALL FOUNDATION REINFORCEMENT STEEL SHALL BE EPOXY COATED.
3. THE COST OF REINFORCEMENT SHALL BE INCLUDED IN THE COST OF THE FOUNDATION.
4. STEEL ANCHOR ROD FORMS SHALL NOT BE REMOVED FOR A MINIMUM OF 3 DAYS AFTER CONCRETE IS POURED. THE TOWER SHALL NOT BE SET FOR A MINIMUM OF 7 DAYS OR AS APPROVED BY THE ENGINEER.
5. COORDINATE THE ROD CIRCLE DIAMETER OF THE STRUCTURE WITH THE DIAMETER OF THE ANCHOR ROD CAGE.
6. THE FOUNDATION SHALL BE POURED MONOLITHICALLY AND SHALL HAVE NO CONSTRUCTION JOINTS.
7. GROUNDING ELECTRODES SHALL BE INSTALLED IN AN ACCESS WELL WHEN THERE IS A CONFLICT IN USING THE METHOD SHOWN.
8. ALL DIMENSIONS ARE IN INCHES (MILLIMETERS) UNLESS OTHERWISE SHOWN.

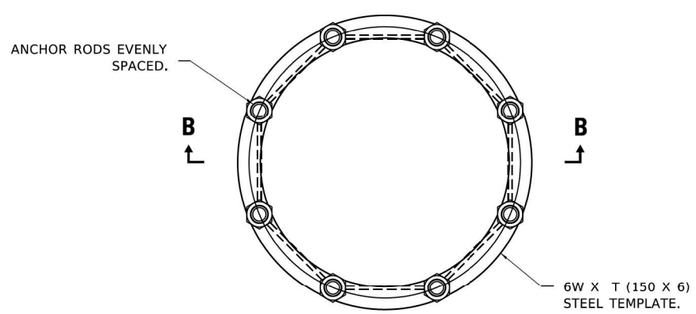

ANCHOR ROD CAGE (PLAN)

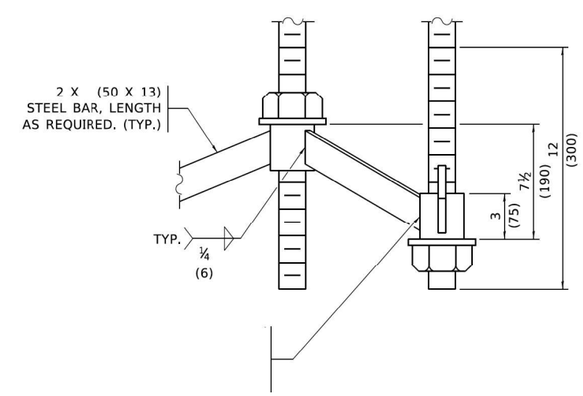

DETAIL B

ITS–52

STRAND ASSOCIATES®
1170 SOUTH HOUBOLT ROAD
JOLIET, ILLINOIS 60431
(815) 744-4200

USER NAME = footemj	DESIGNED - R. Tomsons	REVISED -	
	DRAWN -	REVISED -	
PLOT SCALE = 50.0000 ' / in.	CHECKED -	REVISED -	
PLOT DATE = 4/22/2019	DATE - 04/17/2017	REVISED -	

STATE OF ILLINOIS
DEPARTMENT OF TRANSPORTATION

CCTV CAMERA STRUCTURE, 80 FT. MOUNTING HEIGHT
FOUNDATION, SHEET 2 OF 2

SCALE: NONE | SHEET 1 OF 1 SHEETS | STA. TO STA.

F.A.P. RTE.	SECTION	COUNTY	TOTAL SHEETS	SHEET NO.
342	(531) BR 23	COOK	1211	653
	BE 1003	CONTRACT NO. 62W38		
		ILLINOIS	FED. AID PROJECT	

MODEL: Default
FILE NAME: pw:\\planroom.dot.illinois.gov:PWIDOT\Documents\IDOT Office\District 1\Projects\Dist\5\d72x34\CADData\CADsheets\be1003.dgn

be1003.dgn 4/22/2019 7:34:24 AM User=footemj

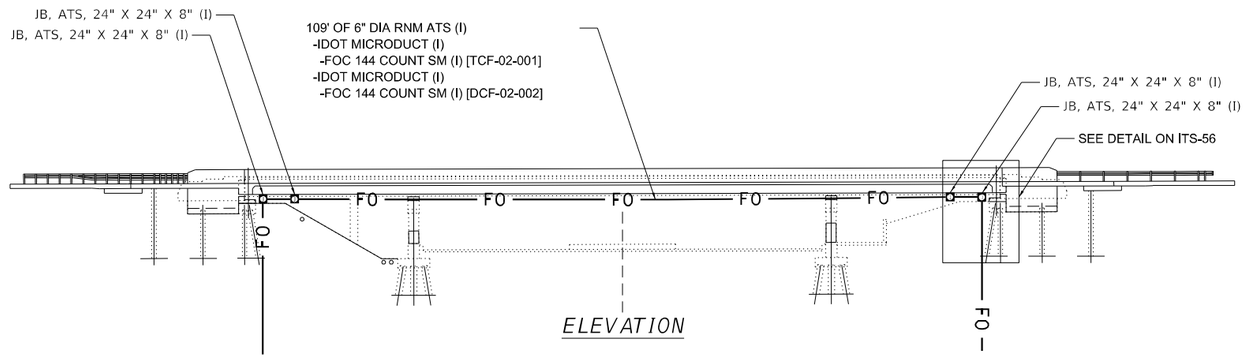

PROFILE VIEW – NOT TO SCALE

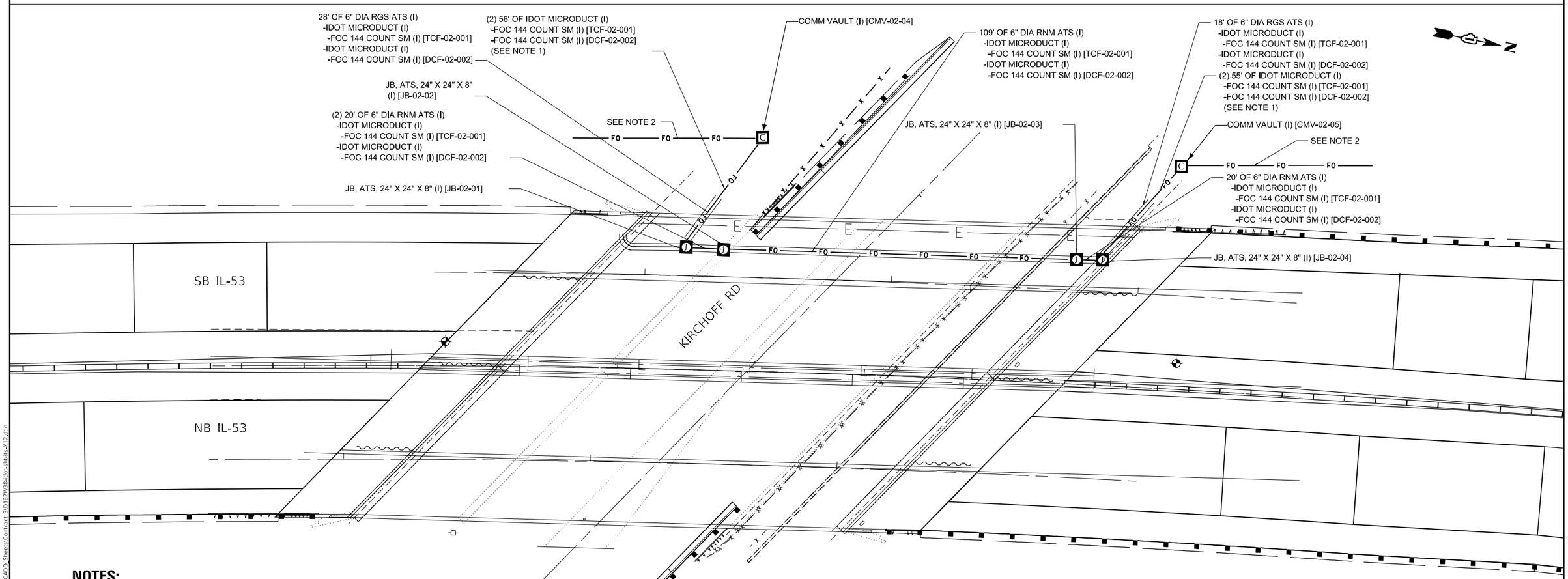

PLAN VIEW – NOT TO SCALE

NOTES:

1. QUANTITY SHOWN ON THIS SHEET IS ACCOUNTED FOR ON THE ITS INSTALLATION PLANS.
2. SEE DRAWINGS ITS-25, ITS-56 AND ITS-57 FOR ADDITIONAL DETAILS.

ITS–53

MODEL: Default
FILE NAME: \\fg01\Projects\22145\04_CADD\CADD_Sheets\Contract 3\0162W38-idot-ilt-its-412.dgn

SINGH
SINGH + ASSOCIATES, INC.
CONSULTING ENGINEERS

USER NAME = mgonzalez	DESIGNED - SG	REVISED -	
	DRAWN VN	REVISED -	
PLOT SCALE = 100.0000 ' / in.	CHECKED - RP	REVISED -	
PLOT DATE = 8/23/2024	DATE - 07/24/2024	REVISED -	

STATE OF ILLINOIS
DEPARTMENT OF TRANSPORTATION

CONDUIT ATTACHED TO STRUCTURE DETAIL
IL ROUTE 53 OVER KIRCHOFF ROAD

SCALE: NTS | SHEET 1 OF 1 SHEETS | STA. TO STA.

F.A.P. RTE.	SECTION	COUNTY	TOTAL SHEETS	SHEET NO.
342	2018-100-BR	COOK	1211	654
		CONTRACT NO. 62W38		
	ILLINOIS	FED. AID PROJECT		

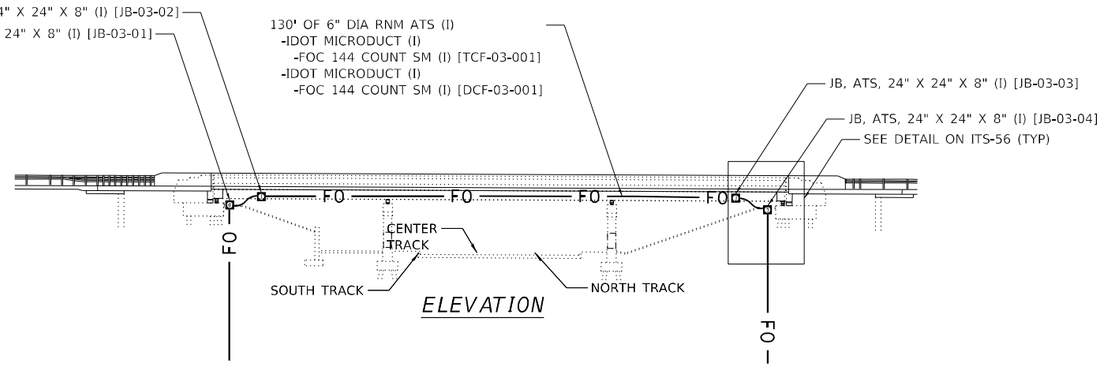

PROFILE VIEW – NOT TO SCALE

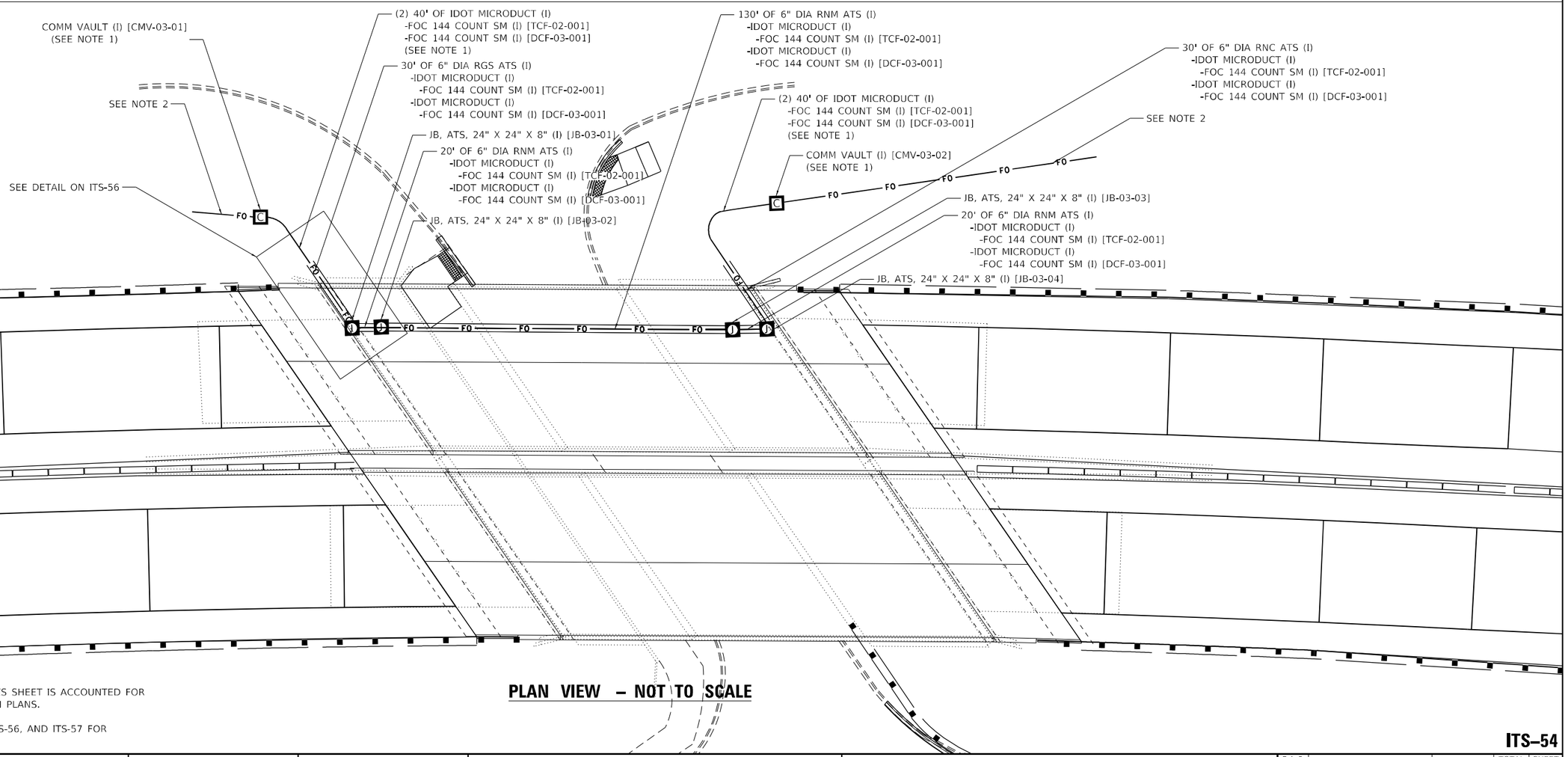

PLAN VIEW – NOT TO SCALE

NOTES:

1. QUANTITY SHOWN ON THIS SHEET IS ACCOUNTED FOR ON THE ITS INSTALLATION PLANS.
2. SEE DRAWINGS ITS-31, ITS-56, AND ITS-57 FOR ADDITIONAL DETAILS.

ITS–54

STRAND ASSOCIATES®
1170 SOUTH HOUBOLT ROAD
JOLIET, ILLINOIS 60431
(815) 744-4200

USER NAME = jaker	DESIGNED - RRS	REVISED -	
	DRAWN - JLN	REVISED -	
PLOT SCALE = 100.0000 ' / in.	CHECKED - BMS	REVISED -	
PLOT DATE = 8/26/2024	DATE - 8/23/2024	REVISED -	

STATE OF ILLINOIS
DEPARTMENT OF TRANSPORTATION

CONDUIT ATTACHED TO STRUCTURE DETAIL
IL ROUTE 53 OVER INDUSTRIAL AVENUE

SCALE: NTS | SHEET 1 OF 1 SHEETS | STA. TO STA.

F.A.P. RTE.	SECTION	COUNTY	TOTAL SHEETS	SHEET NO.
342	(531) BR 23	COOK	1211	655
		CONTRACT NO. 62W38		
	ILLINOIS	FED. AID PROJECT		

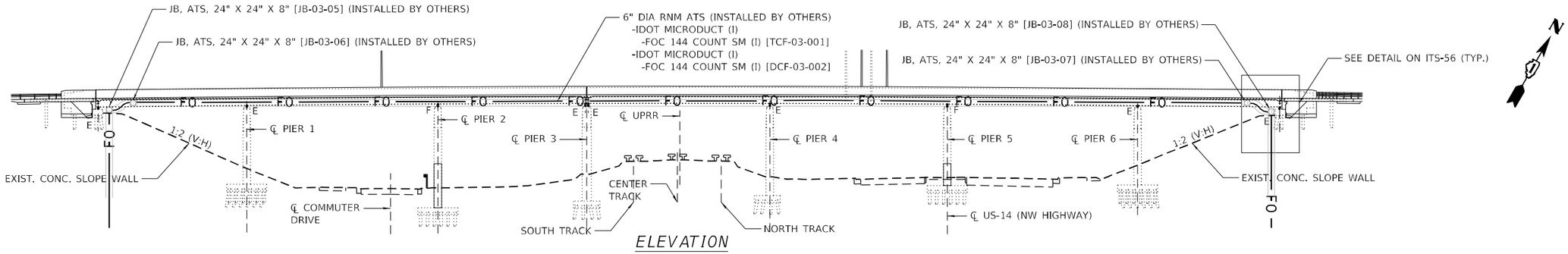

ELEVATION

PROFILE VIEW – NOT TO SCALE

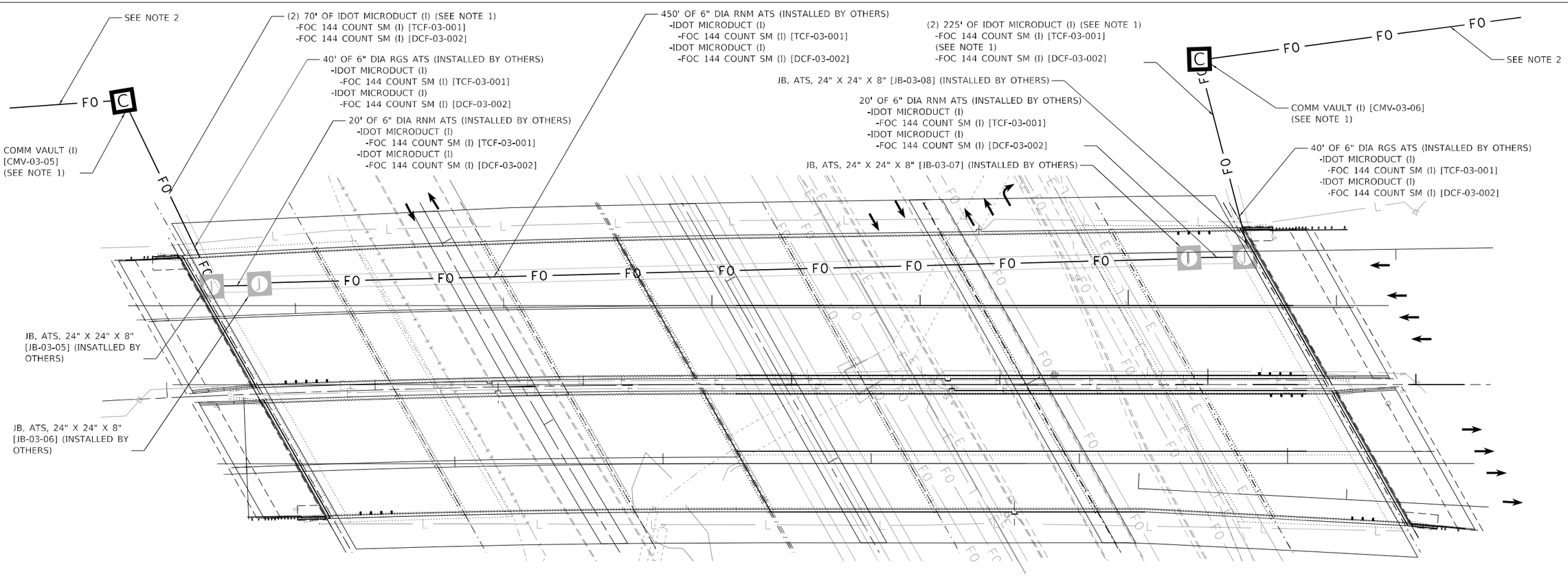

NOTES:

1. QUANTITY SHOWN ON THIS SHEET IS ACCOUNTED FOR ON THE ITS INSTALLATION PLANS.
2. SEE DRAWING ITS-33 FOR DETAILS.

PLAN VIEW – NOT TO SCALE

ITS–55

STRAND ASSOCIATES®
1170 SOUTH HOUBOLT ROAD
JOLIET, ILLINOIS 60431
(815) 744-4200

USER NAME = Jaker	DESIGNED - MAG	REVISED -	
	DRAWN - DJW	REVISED -	
PLOT SCALE = 100.0000 ' / in.	CHECKED - DWG	REVISED -	
PLOT DATE = 9/19/2024	DATE - 8/23/2024	REVISED -	

STATE OF ILLINOIS
DEPARTMENT OF TRANSPORTATION

CONDUIT ATTACHED TO STRUCTURE DETAIL
IL ROUTE 53 OVER COMMUTER DRIVE, UPRR, AND US ROUTE 14

SCALE: NTS | SHEET 1 OF 1 SHEETS | STA. TO STA.

F.A.P. RTE.	SECTION	COUNTY	TOTAL SHEETS	SHEET NO.
342	(531) BR 23	COOK	1211	656
		CONTRACT NO. 62W38		
		ILLINOIS	FED. AID PROJECT	

MODEL: Default
FILE NAME: G:\PROJECTS\6300-6399\6346\113\Drawings\CADMic-ro-SS4\CAD_Sheets\C3B-D162W38-IH-ITS-Conduit-Attachment-Detail01-453-SAI.dgn

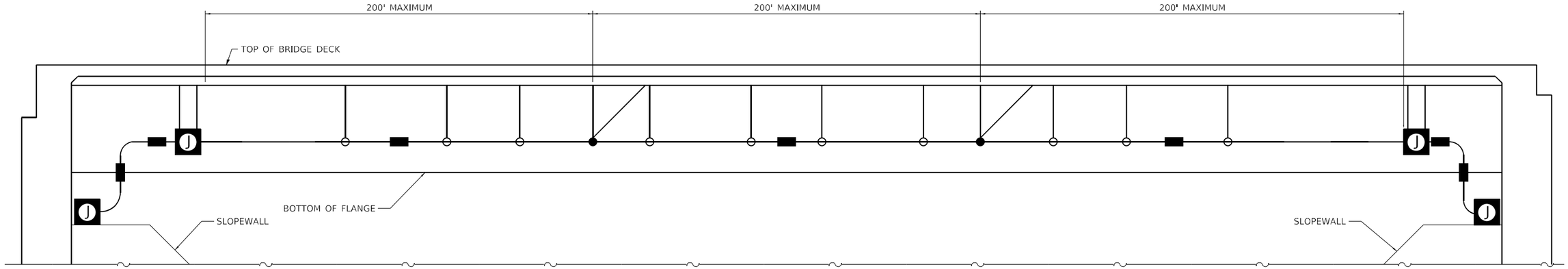

CONDUIT ATTACHED TO BRIDGE PROFILE VIEW

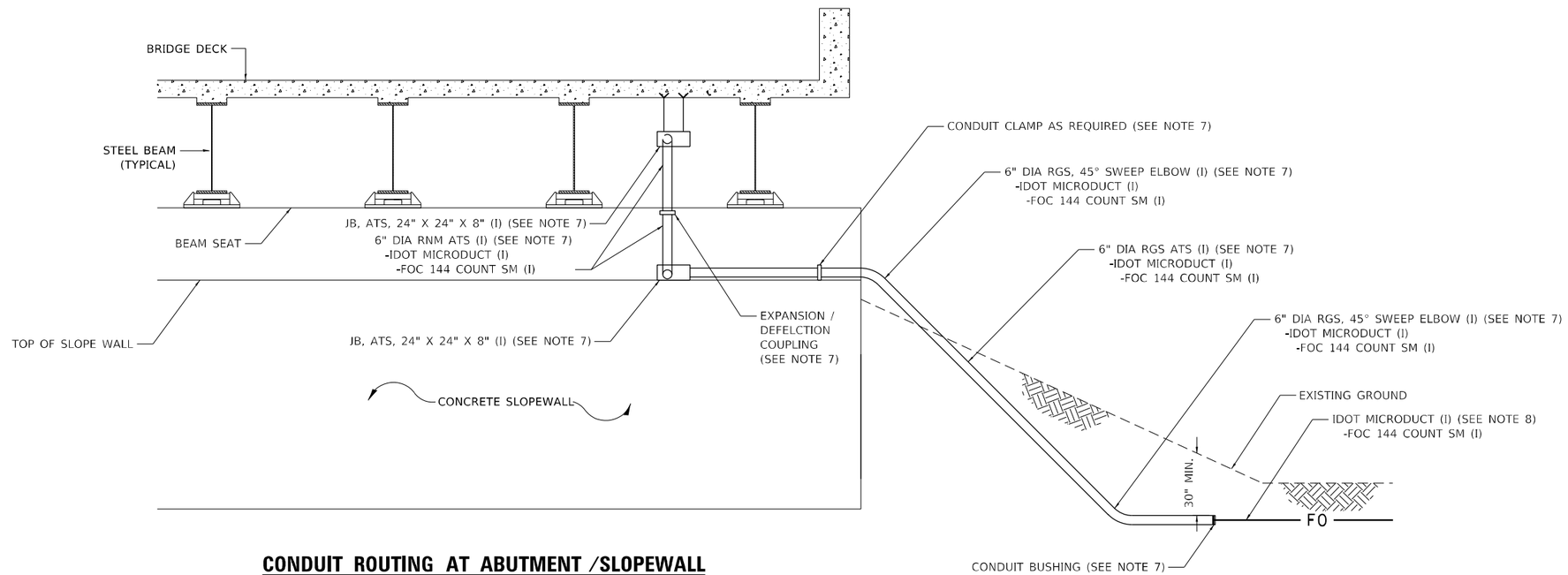

CONDUIT ROUTING AT ABUTMENT /SLOPEWALL ELEVATION VIEW

INSTALLATION NOTES:

1. SPLIT STOP RINGS MUST ALWAYS BE LOCATED ON BOTH SIDE OF ANCHORING HANGERS TO SECURELY RETAIN THE FIBERGLASS CONDUIT.
2. INTERMEDIATE HANGER OPENING MUST BE LARGE ENOUGH TO PERMIT FREE UNRESTRICTED MOTION OF THE FIBERGLASS CONDUIT IN THE HANGER.
3. AFTER INSTALLING THE EXPANSION POINTS, AN ALIGNMENT CHECK IS NECESSARY TO ENSURE THE UNIT WILL TRAVEL FREELY AND NOT BIND DUE TO MISALIGNMENT.
4. ALL HANGER ASSEMBLIES MUST MAINTAIN A MINIMUM OF 6" CLEARANCE FROM COUPLINGS TO AVOID RESTRICTING THE EXPANSION AND CONTRACTION OF THE FIBERGLASS CONDUIT.
5. THE HANGER ASSEMBLIES FOR THE FIBERGLASS CONDUIT SHALL BE ABOVE THE BOTTOM OF THE GIRDER.
5. WHEN MIDSPAN BRIDGE DECK EXPANSION JOINTS ARE PRESENT, THE FIBERGLASS CONDUIT EXPANSION JOINT SHALL BE OFFSET BY 2'-6".
6. AN EXPANSION JOINT MUST BE INSTALLED FOR EVERY 200' OF FIBERGLASS CONDUIT RUN.
7. RNM CONDUIT, RGS CONDUIT, JUNCTION BOXES, AND ANCILLARY COUPLINGS AND FITTINGS ARE INSTALLED BY OTHERS AT IL ROUTE 53 OVER COMMUTER DRIVE, UPRR, AND US ROUTE 14
8. IDOT MICRODUCT AND FOC CONTINUE INTO RGS, RNC, JUNCTION BOXES ATTACHED TO STRUCTURE. NOT SHOWN FOR CLARITY.

LEGEND

- ANCHORING HANGER WITH SPLIT STOP RINGS AND BRACE
- INTERMEDIATE HANGER
- FIBERGLASS CONDUIT WITH EXPANSION JOINT

ITS–56

STRAND ASSOCIATES®
1170 SOUTH HOUBOLT ROAD
JOLIET, ILLINOIS 60431
(815) 744-4200

USER NAME = jaker	DESIGNED - RRS	REVISED -	
	DRAWN - JLN	REVISED -	
PLOT SCALE = 100.0000 ' / in.	CHECKED - BMS	REVISED -	
PLOT DATE = 9/19/2024	DATE - 8/23/2024	REVISED -	

STATE OF ILLINOIS
DEPARTMENT OF TRANSPORTATION

CONDUIT ATTACHMENT TO STRUCTURE DETAIL

SCALE: NTS | SHEET 1 OF 2 SHEETS | STA. TO STA.

F.A.P. RTE.	SECTION	COUNTY	TOTAL SHEETS	SHEET NO.
342	(531) BR 23	COOK	1211	657
		CONTRACT NO. 62W38		
		ILLINOIS	FED. AID PROJECT	

MODEL: Default
FILE NAME: G:\PROJECTS\6300-63996346\13\Drawings\CAD\MicroSS4\CAD_Sheets\C3B-D162W38-ITS-Conduit-Attachment-Detail-02-153-SA1.dgn

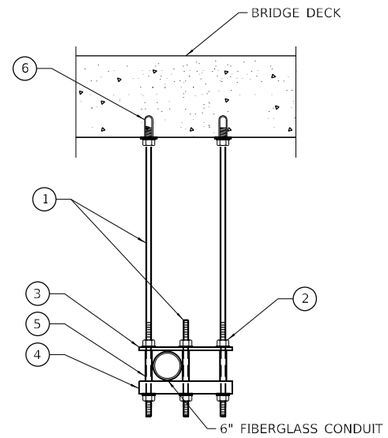

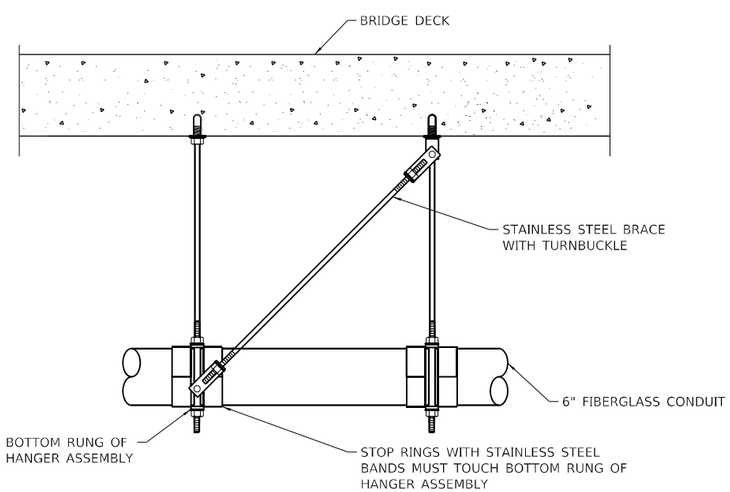

TYPICAL SPLIT STOP RING INSTALLATION
(OPTION 2)

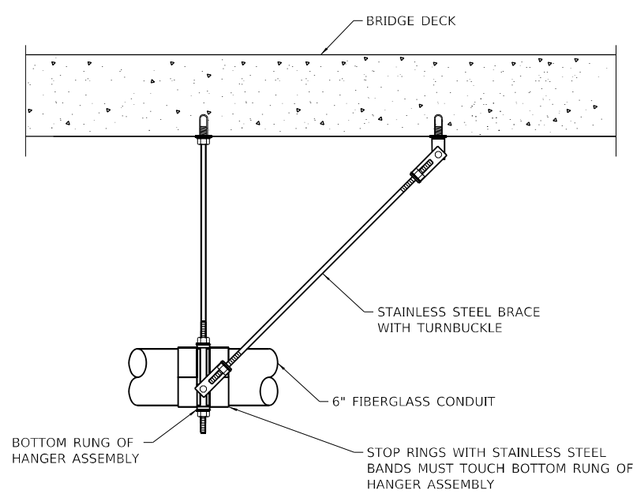

TYPICAL SPLIT STOP RING INSTALLATION
(OPTION 1)

NOTES:

1. CONDUIT SHALL BE SUPPORTED AT A MAXIMUM INTERVAL OF 5' AND WITHIN 2'-6" OF ANY JUNCTION BOX, COUPLING/FITTING OR CHANGE IN DIRECTION.
2. ALL HARDWARE SHALL BE STAINLESS STEEL IN ACCORDANCE WITH ARTICLE 1006.31 OF THE STANDARD SPECIFICATIONS.
3. THE ELECTRICAL CONTRACTOR SHALL COORDINATE THE LOCATION OF THE CONCRETE INSERTS WITH THE BRIDGE CONTRACTOR.
4. THE COST OF THE CONCRETE HANGERS AND INSERTS SHALL BE INCLUDED IN THE COST OF CONDUIT ATTACHED TO STRUCTURE.
5. CONDUIT SHALL NOT COME INTO CONTACT WITH ANY BRACING OR OTHER STRUCTURAL MEMBERS.
6. PROVIDE 1" MINIMUM CLEARANCE TO ALL STRUCTURAL MEMBERS.
7. SPLIT STOP RING AND BRIDGE SHALL BE IN ACCORDANCE WITH FIBERGLASS CONDUIT MANUFACTURER'S REQUIREMENTS.
8. SINGLE-ROD HANGER CONFIGURATION SHALL BE USED IN AREAS WHERE BRIDGE BEAM/GIRDER FLANGES COME IN CONFLICT WITH STANDARD DUAL-ROD CONFIGURATION.
9. ALL RODS, NUTS, WASHERS, FLAT BARS, TUBES, AND OTHER ANCILLARY ITEMS ARE TO BE PAID FOR UNDER CONDUIT ITEM.
10. CONDUIT SHALL BE CENTERED BETWEEN THE BEAMS.
11. FIBERGLASS SQUARE TUBE MUST BE LEVELED OUT AT TIME OF PLACEMENT.
12. THE HANGAR ASSEMBLIES FOR THE FIBER GLASS CONDUIT SHALL BE ABOVE THE BOTTOM OF THE GIRDER
13. ALL HANGER ASSEMBLIES MUST MAINTAIN A MINIMUM OF 6" CLEARANCE FROM COUPLINGS TO AVOID RESTRICTING THE EXPANSION AND CONTRACTION OF THE FRE DUCT.
14. INTERMEDIATE HANGER OPENINGS MUST BE LARGE ENOUGH TO PERMIT UNRESTRICTED MOTION OF THE FRE CONDUIT WITHIN THE HANGER.

CONDUIT HANGER LEGEND

1. ¾" STAINLESS STEEL THREADED ROD
2. ⅜" STAINLESS STEEL HEX NUT, STAINLESS STEEL FLAT WASHER AND STAINLESS STEEL LOCK WASHER, TYP.
3. ½" X 2" X 1'-6¾" FIBERGLASS FLAT BAR (LEVEL)
4. ¼" X 2" X 1'-6¾" FIBERGLASS SQUARE TUBE (LEVEL)
5. 1" FIBERGLASS ROUND TUBE 6⅞" LONG
6. 500 LBS. MINIMUM CAPACITY STAINLESS STEEL CONCRETE INSERTS CAST IN DECK FOR ¾" THREADED RODS

NOTE: ABOVE SIZES/LENGTHS SHALL BE VERIFIED BY CONTRACTOR TO ENSURE PROPER CONDUIT FIT BEFORE ORDERING MATERIAL.

ITS–57

STRAND ASSOCIATES®
1170 SOUTH HOUBOLT ROAD
JOLIET, ILLINOIS 60431
(815) 744-4200

USER NAME = jaker	DESIGNED - RRS	REVISED -	
	DRAWN - JLN	REVISED -	
PLOT SCALE = 100.0000 ' / in.	CHECKED - BMS	REVISED -	
PLOT DATE = 8/26/2024	DATE - 8/23/2024	REVISED -	

STATE OF ILLINOIS
DEPARTMENT OF TRANSPORTATION

CONDUIT ATTACHED TO STRUCTURE DETAIL

SCALE: NTS | SHEET 2 OF 2 SHEETS | STA. TO STA.

F.A.P. RTE.	SECTION	COUNTY	TOTAL SHEETS	SHEET NO.
342	(531) BR 23	COOK	1211	658
		CONTRACT NO. 62W38		
		ILLINOIS FED. AID PROJECT		

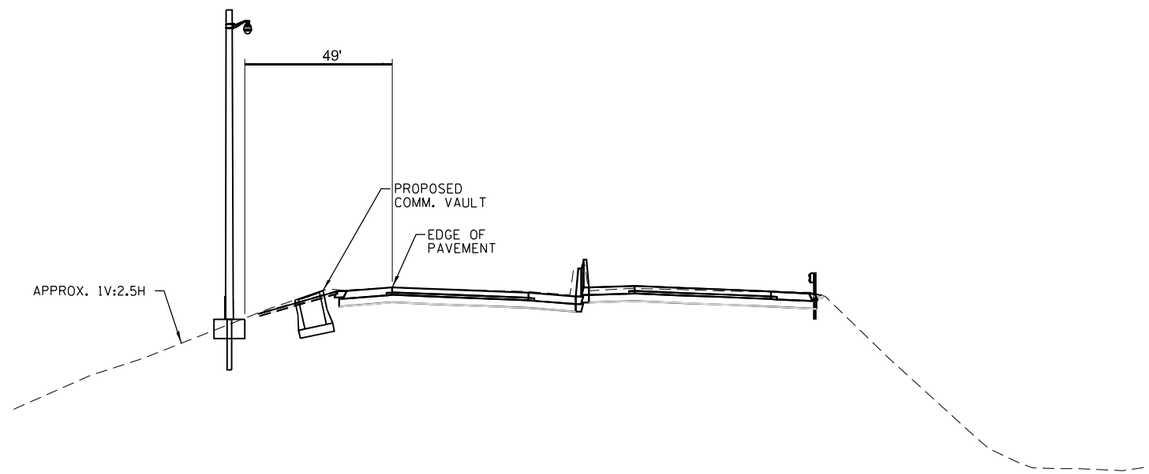

IL-53 SB STA. 1204+25.00

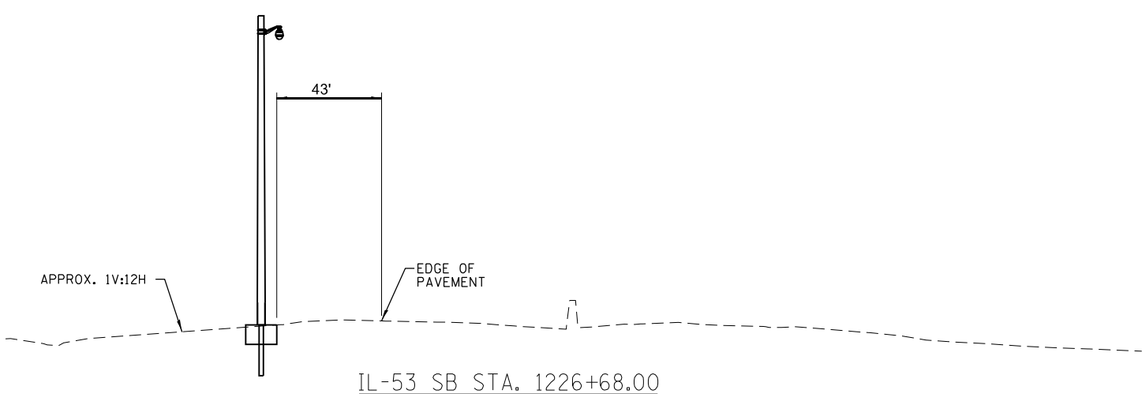

IL-53 SB STA. 1226+68.00

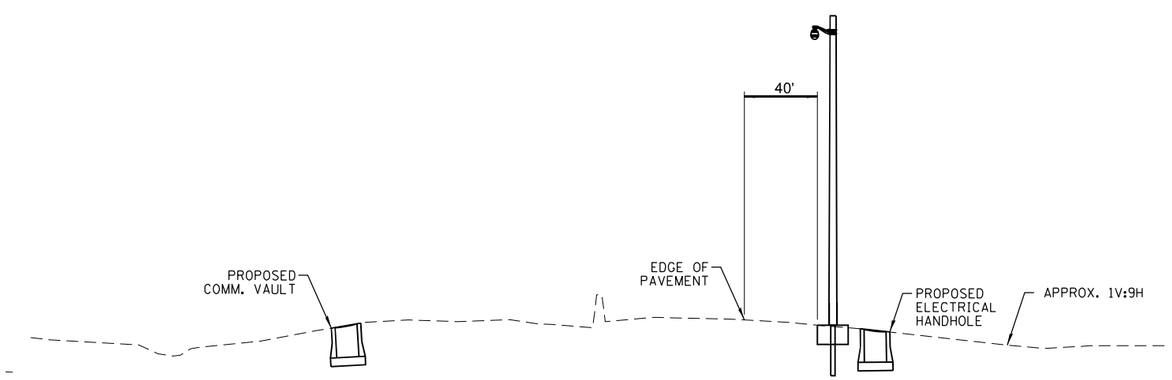

IL-53 NB STA. 1234+95.00

ITS–58

MODEL: Default
FILE NAME: \\60.1\Projects\22145\04-CADD\CADD_Sheets\Contract 3\D162\V38-ddot-pht-ft-x11.dgn

SINGH
SINGH + ASSOCIATES, INC.
CONSULTING ENGINEERS

USER NAME = mgonzalez	DESIGNED - SG	REVISED -
	DRAWN VN	REVISED -
PLOT SCALE = 100.0000 ' / in.	CHECKED - RP	REVISED -
PLOT DATE = 8/23/2024	DATE - 07/24/2024	REVISED -

STATE OF ILLINOIS
DEPARTMENT OF TRANSPORTATION

ITS CROSS SECTIONS

SCALE: N.T.S. | SHEET 1 OF 4 SHEETS | STA. TO STA.

F.A.P. RTE.	SECTION	COUNTY	TOTAL SHEETS	SHEET NO.
342	2018-100-BR	COOK	1211	659
		CONTRACT NO. 62W38		
	ILLINOIS	FED. AID PROJECT		

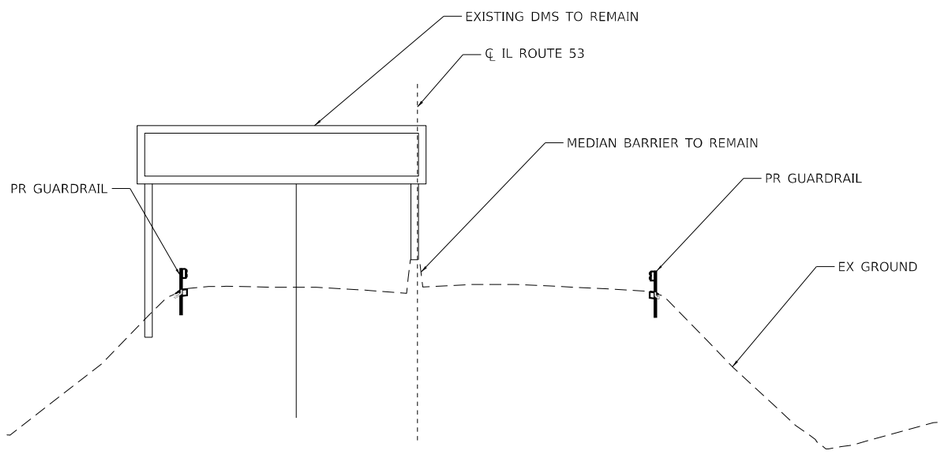

STA 1261+61
(LOOKING NORTH)

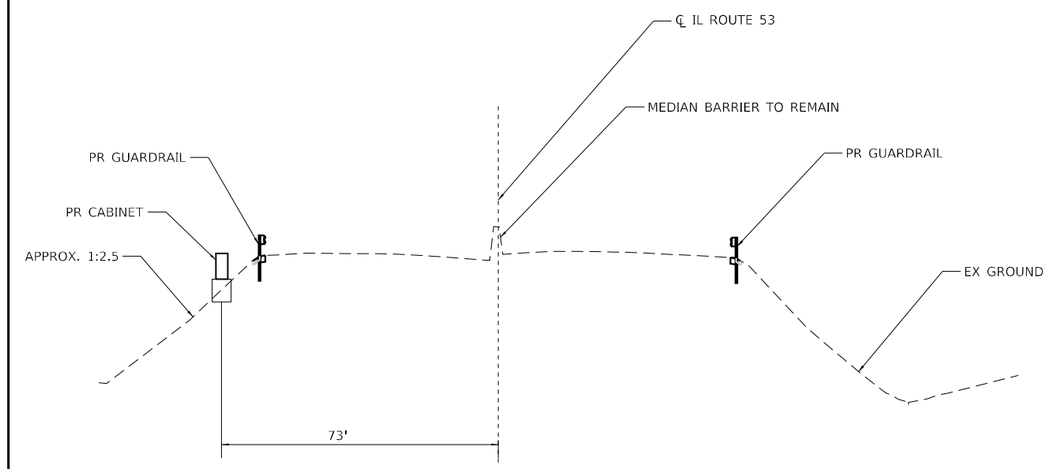

STA 1262+76
(LOOKING NORTH)

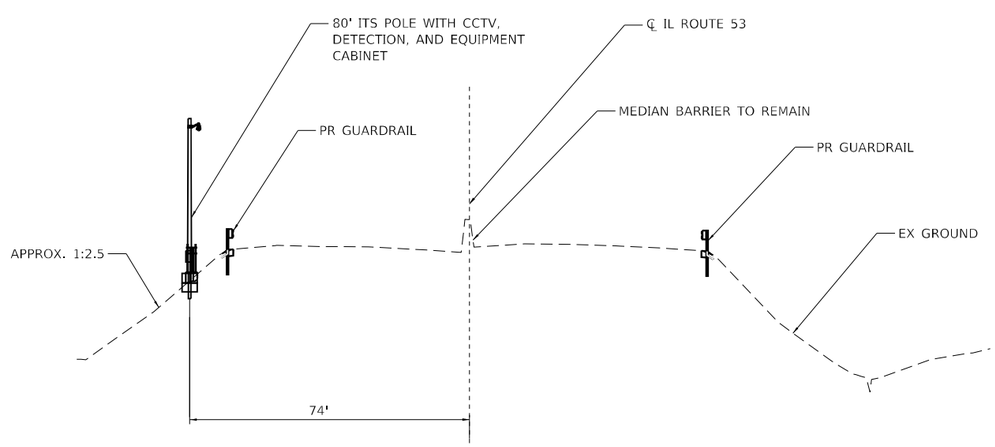

STA 1263+56
(LOOKING NORTH)

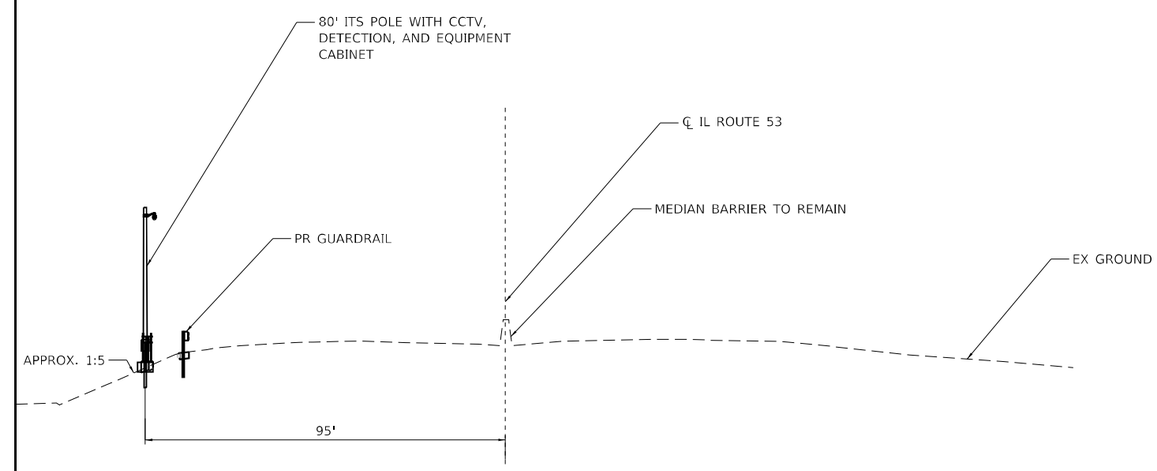

STA 1288+95
(LOOKING NORTH)

ITS–59

MODEL: Default
FILE NAME: S:\JOB\6300-6399\6346\13\Drawings\CADMicro\SSA\CAD_Sheets\D162V38-IPI-ITS-xsec-IL53-SA1.dgn

STRAND ASSOCIATES®
1170 SOUTH HOUBOLT ROAD
JOLIET, ILLINOIS 60431
(815) 744-4200

USER NAME = jaker	DESIGNED - RRS	REVISED -	
	DRAWN - JLN	REVISED -	
PLOT SCALE = 100.0000 ' / in.	CHECKED - BMS	REVISED -	
PLOT DATE = 8/26/2024	DATE - 8/23/2024	REVISED -	

STATE OF ILLINOIS
DEPARTMENT OF TRANSPORTATION

ITS CROSS SECTIONS

SCALE: | SHEET 3 OF 5 SHEETS | STA. | TO STA.

F.A.P. RTE.	SECTION	COUNTY	TOTAL SHEETS	SHEET NO.
342	(531) BR 23	COOK	1211	660
		CONTRACT NO. 62W38		
		ILLINOIS	FED. AID PROJECT	

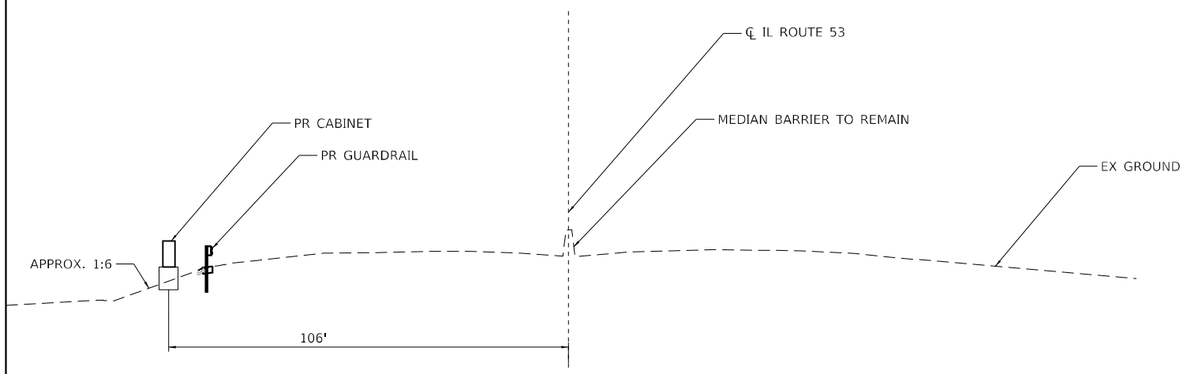

STA 1289 + 56
(LOOKING NORTH)

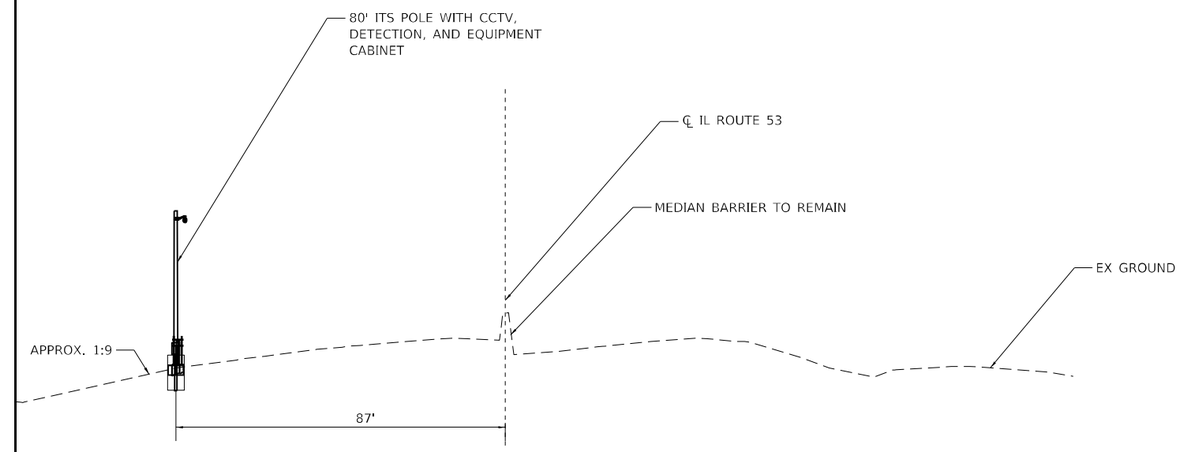

STA 1336 + 02
(LOOKING NORTH)

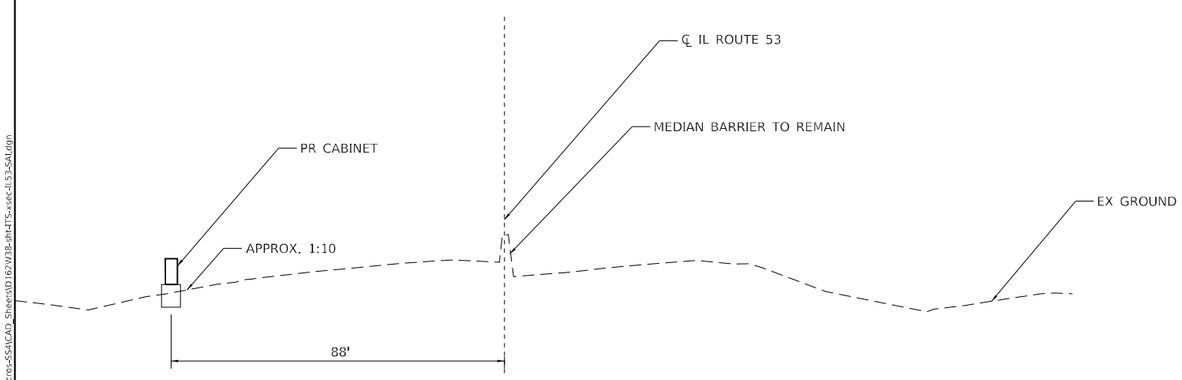

STA 1336 + 43
(LOOKING NORTH)

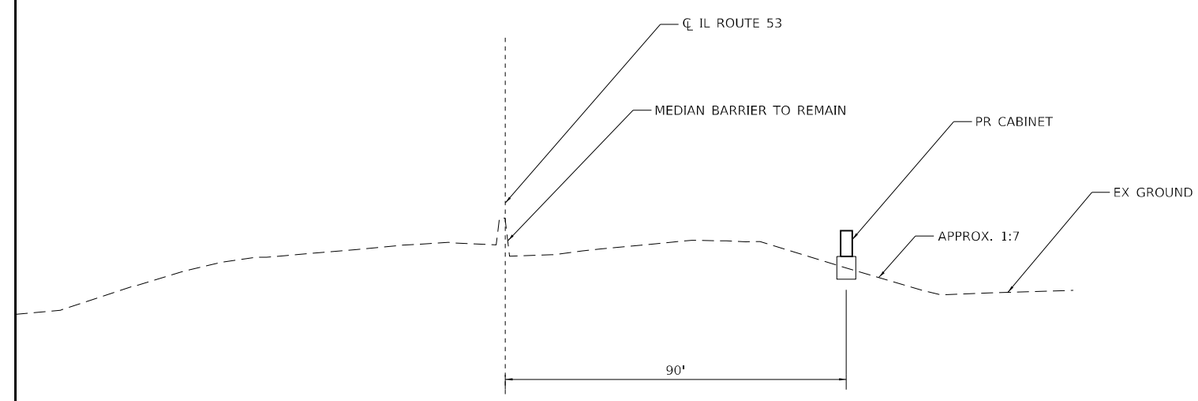

STA 1348 + 13
(LOOKING NORTH)

ITS–60

MODEL: Default
FILE NAME: S:\JOB\6300-6399\6346\113\Drawings\CADMicro\SSA\CAD_Sheets\D162V38-IPI-ITS-xsec-IL53-SA1.dgn

STRAND ASSOCIATES®
1170 SOUTH HOUBOLT ROAD
JOLIET, ILLINOIS 60431
(815) 744-4200

USER NAME = jaker	DESIGNED - RRS	REVISED -	
	DRAWN - JLN	REVISED -	
PLOT SCALE = 100.0000 ' / in.	CHECKED - BMS	REVISED -	
PLOT DATE = 8/26/2024	DATE - 8/23/2024	REVISED -	

STATE OF ILLINOIS
DEPARTMENT OF TRANSPORTATION

ITS CROSS SECTIONS

SCALE: | SHEET 4 OF 5 SHEETS | STA. TO STA.

F.A.P. RTE.	SECTION	COUNTY	TOTAL SHEETS	SHEET NO.
342	(531) BR 23	COOK	1211	661
		CONTRACT NO. 62W38		
		ILLINOIS	FED. AID PROJECT	

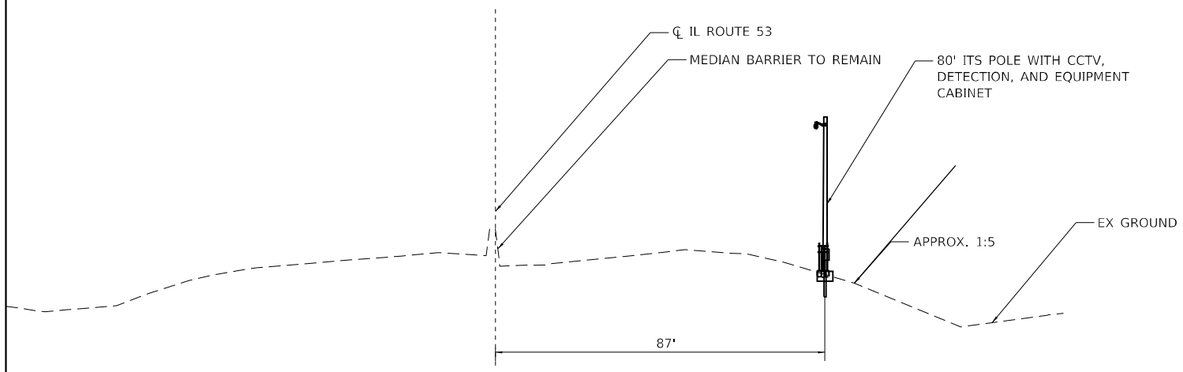

STA 1348+78
(LOOKING NORTH)

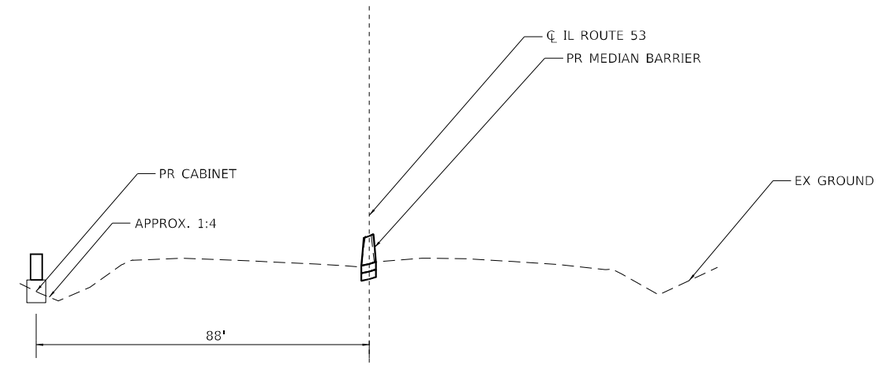

STA 1379+74
(LOOKING NORTH)

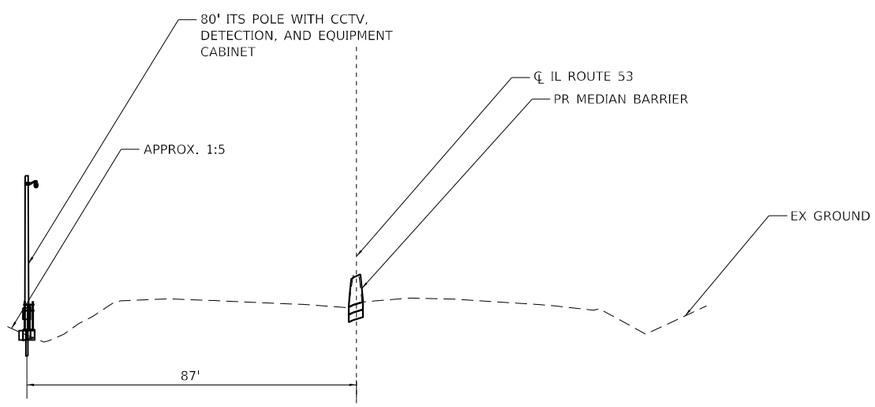

STA 1380+19
(LOOKING NORTH)

ITS–61

MODEL: Default
FILE NAME: S:\JOB\6300-6399\6346\13\Drawings\CADD\Micro-SS\ITCAD_Sheets\D162V38-sht-ITS-xsec-IL53-SA1.dgn

STRAND ASSOCIATES®
1170 SOUTH HOUBOLT ROAD
JOLIET, ILLINOIS 60431
(815) 744-4200

USER NAME = jaker	DESIGNED - RRS	REVISED -	
	DRAWN - JLN	REVISED -	
PLOT SCALE = 100.0000 ' / in.	CHECKED - BMS	REVISED -	
PLOT DATE = 8/26/2024	DATE - 8/23/2024	REVISED -	

STATE OF ILLINOIS
DEPARTMENT OF TRANSPORTATION

ITS CROSS SECTIONS

SCALE: NTS | SHEET 5 OF 5 SHEETS | STA. TO STA.

F.A.P. RTE.	SECTION	COUNTY	TOTAL SHEETS	SHEET NO.
342	(531) BR 23	COOK	1211	662
		CONTRACT NO. 62W38		
		ILLINOIS	FED. AID PROJECT	

SINGLE LINE DIAGRAM

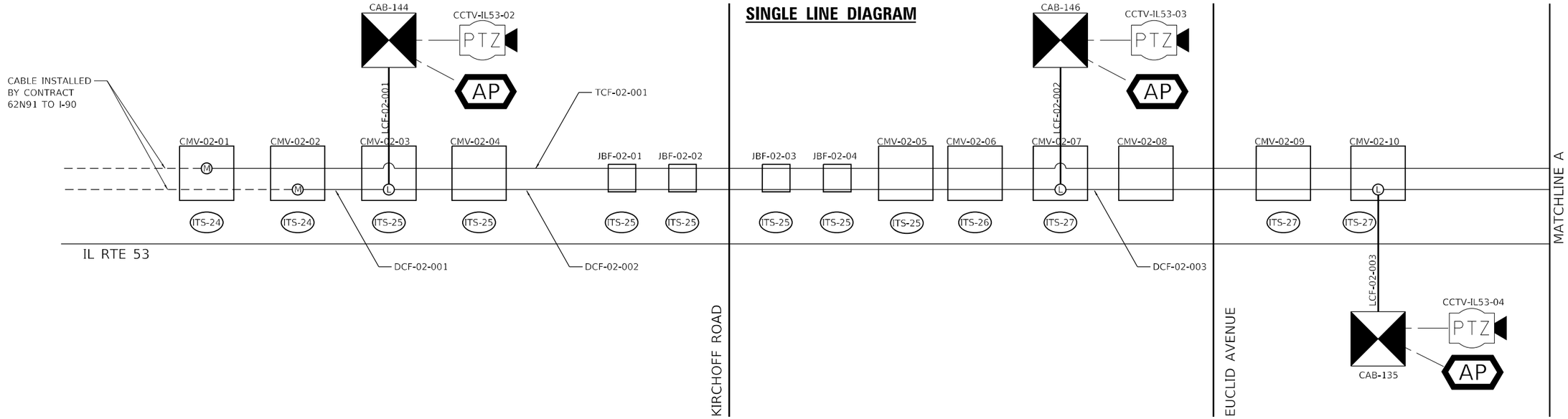

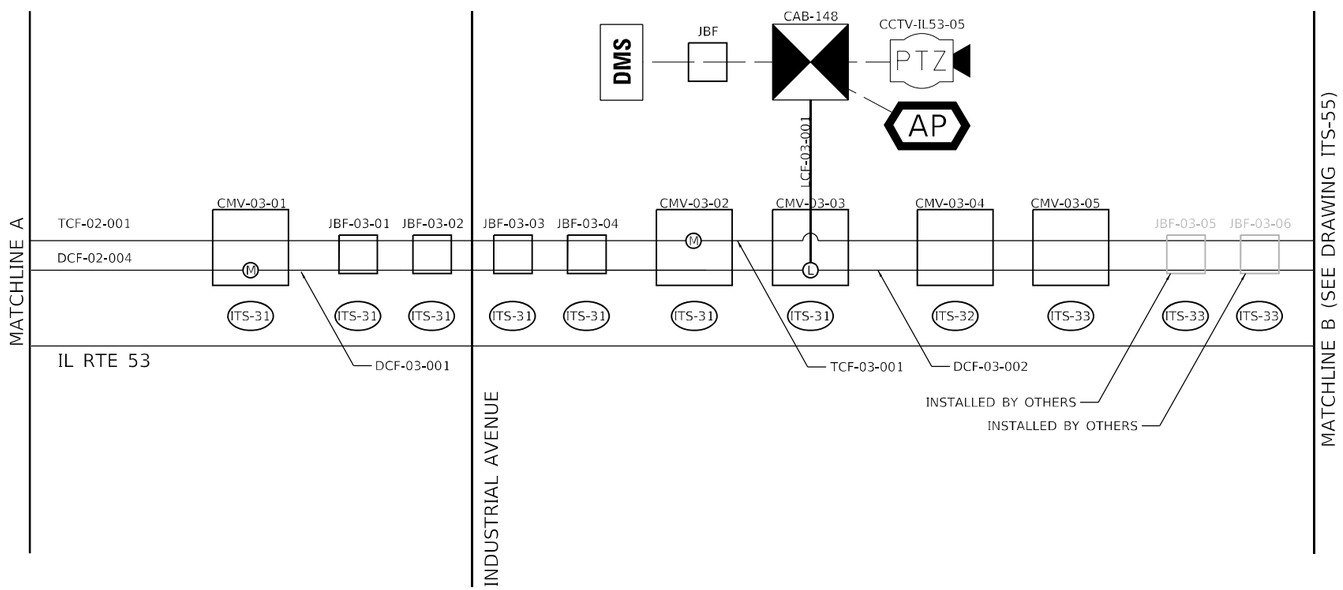

LEGEND

DCF-XX-000	DISTRIBUTION FIBER OPTIC CABLE, 144 FIBER
LCF-XX-000a	LATERAL FIBER OPTIC CABLE, 12 FIBER
TCF-xx-yyy (E)	EXISTING FIBER OPTIC CABLE
— ——— ——	DEVICE CABLE
L	FIBER OPTIC SPLICE, LATERAL
M	FIBER OPTIC SPLICE, MAINLINE
ITS-XX	PLAN SHEET NUMBER
AP	WIRELESS DETECTION SYSTEM ACCESS POINT
CMV-xx-000	COMMUNICATIONS VAULT
HHF-xx-000	HANDHOLE
JBF-xx-000	JUNCTION BOX
	CABINET
PTZ	CCTV CAMERA
DMS	DYNAMIC MESSAGE SIGN

YYY-XX-ZZZ
- DESIGNATION NUMBER
- LOCATION DESIGNATION
- EQUIPMENT DESIGNATION PREFIX

EQUIPMENT PREFIX DESCRIPTIONS

PREFIX	DESCRIPTION
TCF	TRUNK CABLE FIBER
DCF	DISTRIBUTION CABLE FIBER
LCF	LATERAL CABLE FIBER
CMV	COMMUNICATION VAULT
HHF	HAND HOLE FIBER
JBF	JUNCTION BOX
CCTV	CLOSED-CIRCUIT TELEVISION

NOTES:

1. TRACER CABLE HAS BEEN OMITTED FOR PLAN CLARITY.

STRAND ASSOCIATES®
1170 SOUTH HOUBOLT ROAD
JOLIET, ILLINOIS 60431
(815) 744-4200

USER NAME = jaker	DESIGNED - RRS	REVISED -	
	DRAWN - JLN	REVISED -	
PLOT SCALE = 100.0000 ' / in.	CHECKED - BMS	REVISED -	
PLOT DATE = 9/19/2024	DATE - 8/23/2024	REVISED -	

STATE OF ILLINOIS
DEPARTMENT OF TRANSPORTATION

INTELLIGENT TRANSPORATION SYSTEMS
COMMUNICATION SINGLE LINE DIAGRAM

SCALE: NTS | SHEET 1 OF 2 SHEETS | STA. TO STA.

F.A.P. RTE.	SECTION	COUNTY	TOTAL SHEETS	SHEET NO.
342	(531) BR 23	COOK	1211	663
		CONTRACT NO. 62W38		
		ILLINOIS FED. AID PROJECT		

MODEL: Default
FILE NAME: G:\PROJECTS\6300-6399\6346\113\Drawings\CADMic-ro-SS4\CAD_Sheets\C3B-D162W38-IH-ITS-SLD-01-I153-S4L.dgn

SINGLE LINE DIAGRAM

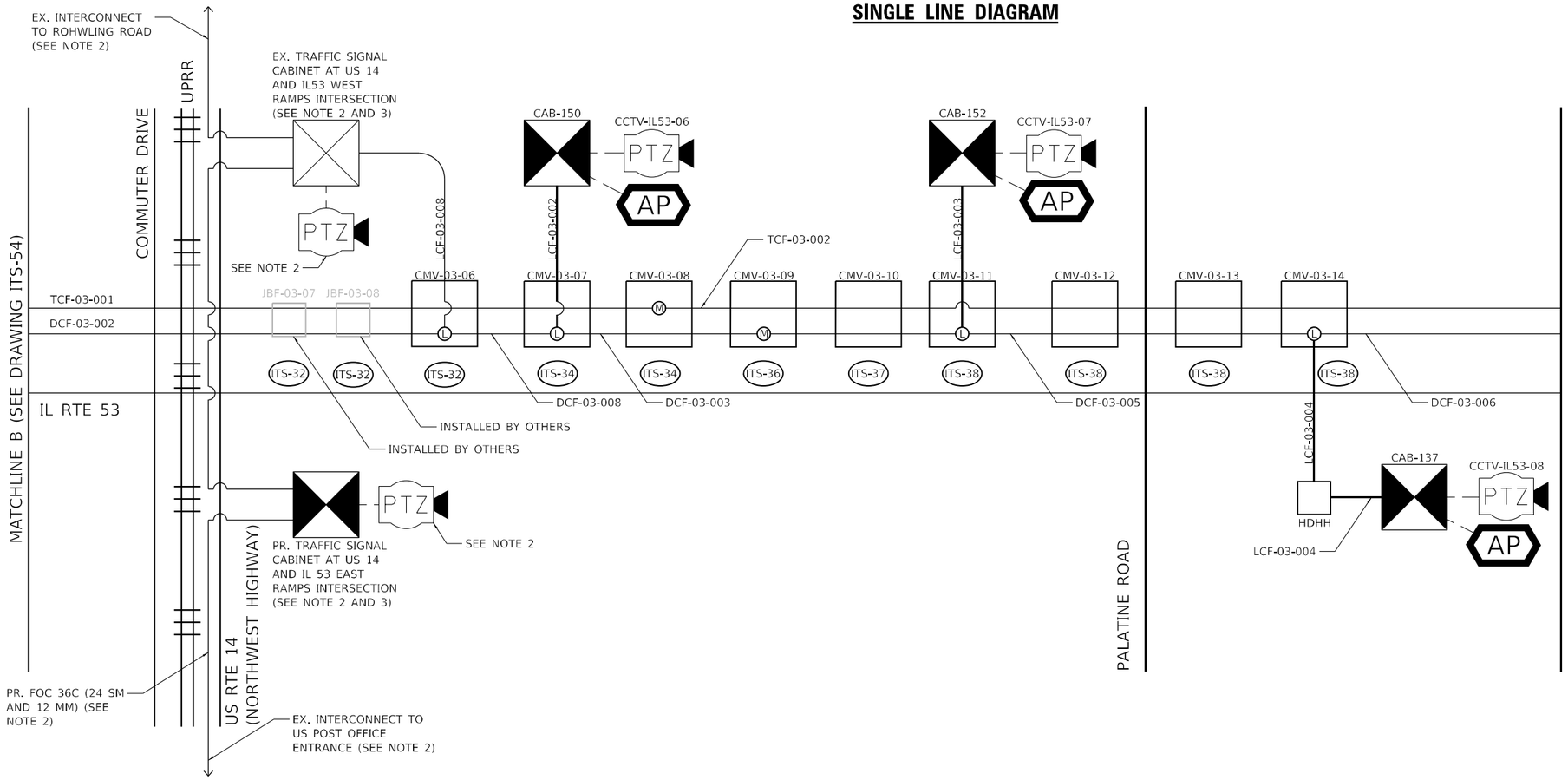

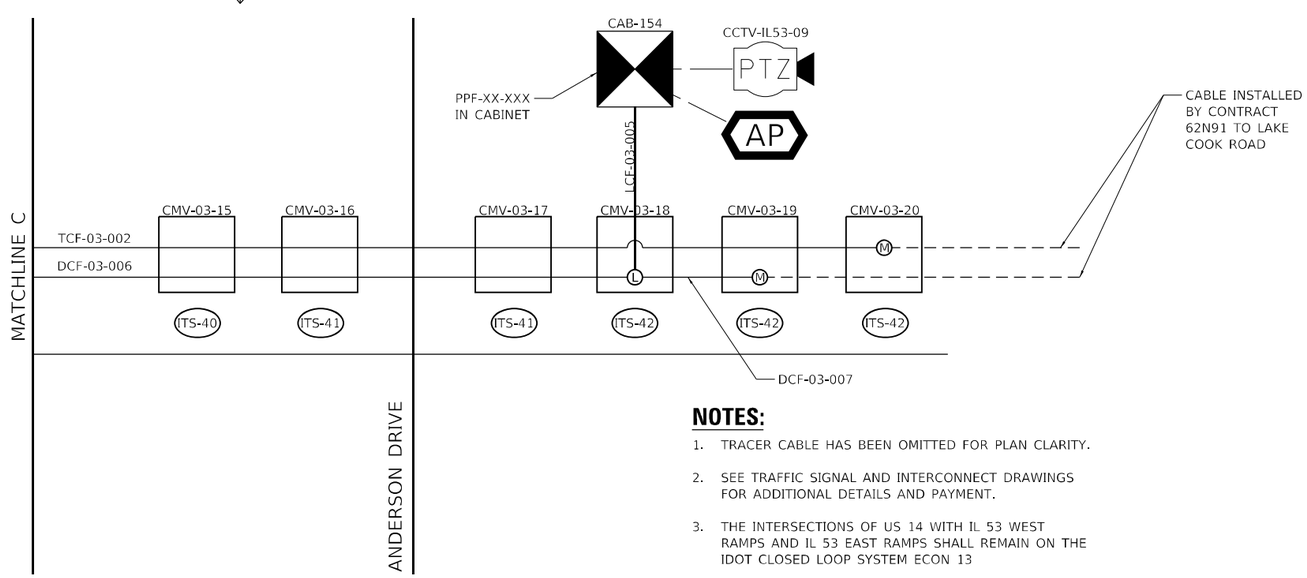

LEGEND

DCF-XX-000	DISTRIBUTION FIBER OPTIC CABLE, 144 FIBER
LCF-XX-000a	LATERAL FIBER OPTIC CABLE, 12 FIBER
TCF-xx-yyy (E)	EXISTING FIBER OPTIC CABLE
	DEVICE CABLE
L	FIBER OPTIC SPLICE, LATERAL
M	FIBER OPTIC SPLICE, MAINLINE
ITS-XX	PLAN SHEET NUMBER
AP	WIRELESS DETECTION SYSTEM ACCESS POINT
CMV-xx-000	COMMUNICATIONS VAULT
HDHH	HANDHOLE
JBF-xx-000	JUNCTION BOX
	EX. CABINET
	PR. CABINET
PTZ	CCTV CAMERA
DMS	DYNAMIC MESSAGE SIGN

YYY-XX-ZZZ
- DESIGNATION NUMBER
- LOCATION DESIGNATION
- EQUIPMENT DESIGNATION PREFIX

EQUIPMENT PREFIX DESCRIPTIONS

PREFIX	DESCRIPTION
TCF	TRUNK CABLE FIBER
DCF	DISTRIBUTION CABLE FIBER
LCF	LATERAL CABLE FIBER
CMV	COMMUNICATION VAULT
HHF	HAND HOLE FIBER
JBF	JUNCTION BOX
CCTV	CLOSED-CIRCUIT TELEVISION

NOTES:

1. TRACER CABLE HAS BEEN OMITTED FOR PLAN CLARITY.
2. SEE TRAFFIC SIGNAL AND INTERCONNECT DRAWINGS FOR ADDITIONAL DETAILS AND PAYMENT.
3. THE INTERSECTIONS OF US 14 WITH IL 53 WEST RAMPS AND IL 53 EAST RAMPS SHALL REMAIN ON THE IDOT CLOSED LOOP SYSTEM ECON 13

ITS–63

STRAND ASSOCIATES®
1170 SOUTH HOUBOLT ROAD
JOLIET, ILLINOIS 60431
(815) 744-4200

USER NAME = jaker	DESIGNED - RRS	REVISED -	
	DRAWN - JLN	REVISED -	
PLOT SCALE = 100.0000 ' / in.	CHECKED - BMS	REVISED -	
PLOT DATE = 9/19/2024	DATE - 8/23/2024	REVISED -	

STATE OF ILLINOIS
DEPARTMENT OF TRANSPORTATION

INTELLIGENT TRANSPORATION SYSTEMS
COMMUNICATION SINGLE LINE DIAGRAM

SCALE: NTS | SHEET 2 OF 2 SHEETS | STA. TO STA.

F.A.P. RTE.	SECTION	COUNTY	TOTAL SHEETS	SHEET NO.
342	(531) BR 23	COOK	1211	664

CONTRACT NO. 62W38
ILLINOIS | FED. AID PROJECT

MODEL: Default
FILE NAME: G:\PROJECTS\6300-6399\6346\113\Drawings\CADMicro-SS4\CAD_Sheets\C3B-D162W38-IHI-ITS-SLD-01-IL53-S4.dgn

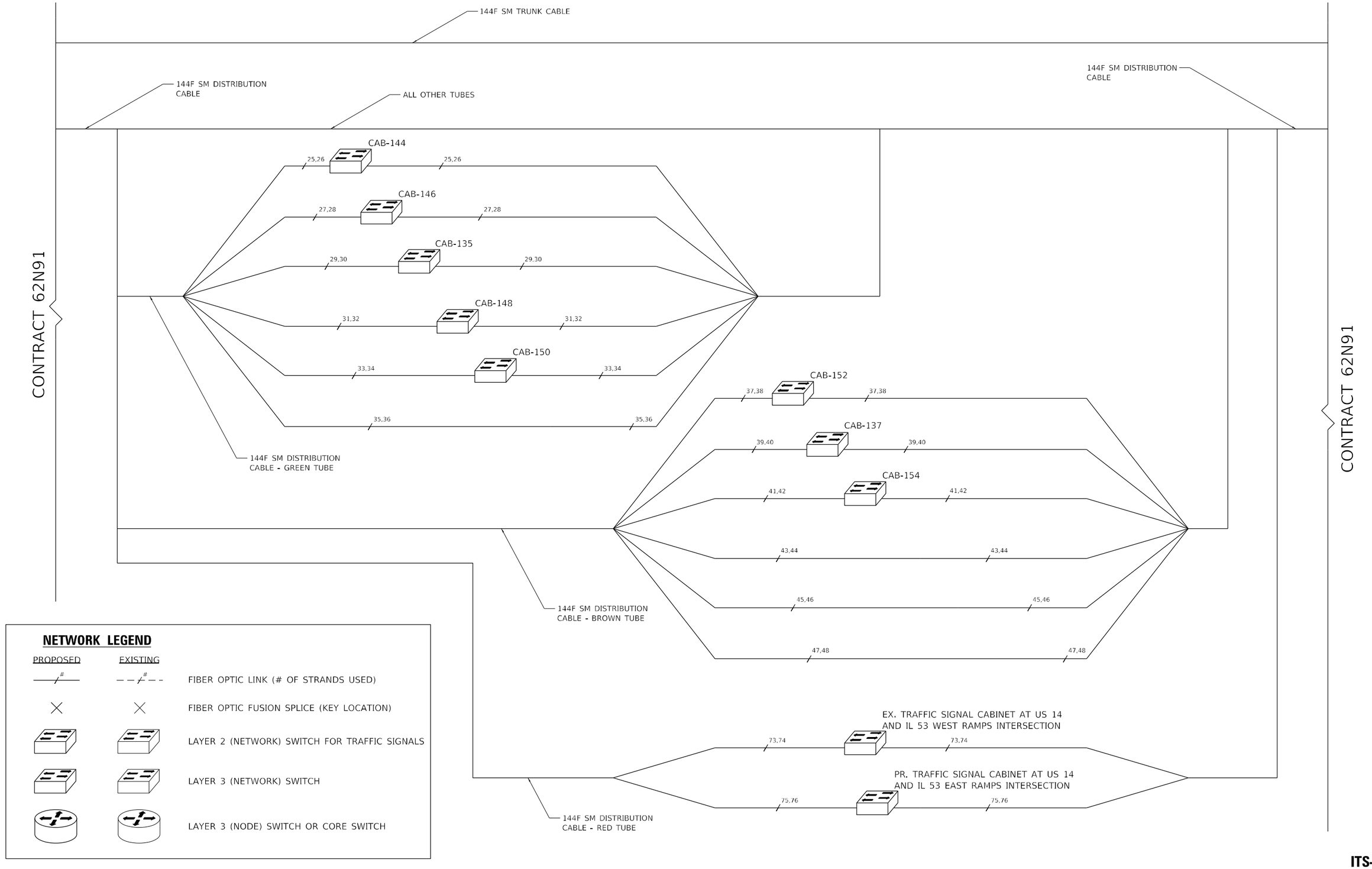

ITS–64

MODEL: Default
FILE NAME: S:\OL\6300-6399\6346\113\Drawings\CADMicro-SS4\CAD_Sheets\D162W38-sht-ITS-Communications-Network-Overview-IL53-SA1.dgn

SA STRAND ASSOCIATES®
1170 SOUTH HOUBOLT ROAD
JOLIET, ILLINOIS 60431
(815) 744-4200

USER NAME = jaker	DESIGNED - RRS	REVISED -	
	DRAWN - JLN	REVISED -	
PLOT SCALE = 100.0000 ' / in.	CHECKED - BMS	REVISED -	
PLOT DATE = 8/26/2024	DATE - 8/23/2024	REVISED -	

STATE OF ILLINOIS
DEPARTMENT OF TRANSPORTATION

INTELLIGENT TRANSPORTATION SYSTEMS
COMMUNICATION NETWORK OVERVIEW

SCALE: | SHEET 2 OF 3 SHEETS | STA. TO STA.

F.A.P. RTE.	SECTION	COUNTY	TOTAL SHEETS	SHEET NO.
342	(531) BR 23	COOK	1211	665
		CONTRACT NO. 62W38		
	ILLINOIS	FED. AID PROJECT		

NETWORK DIAGRAM LEGEND

CABLES

- SHIELDED CAT-6 CABLE
- UNSHIELDED CAT-6 CABLE
- COAXIAL CABLE
- 1,2 — FIBER OPTIC CABLE STRANDS (STRAND USAGE DESIGNATION)
- J 2 — FIBER OPTIC JUMPER (NO. OF JUMPERS)
- P 2 — FIBER OPTIC PIGTAIL (NO. OF PIGTAILS)
- FIBER OPTIC FUSION SPLICE

FIELD DEVICES AND CABINET EQUIPMENT

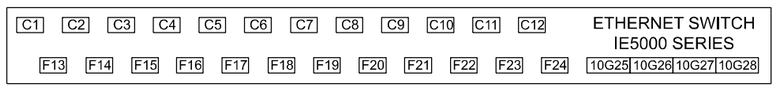

LAYER 3 (NODE) ETHERNET SWITCH

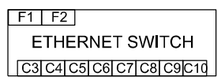

LAYER 2 OR 3 (NETWORK) ETHERNET SWITCH (AS NOTED ON DRAWINGS)

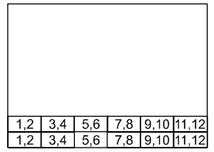

FIBER OPTIC PATCH PANEL AND SPLICE TRAYS

IP RELAY FOR REMOTE CAMERA RESTART

PROPOSED HD PTZ CCTV CAMERA

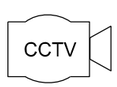

EXISTING PTZ CCTV CAMERA

PROPOSED ACCESS POINT

GENERAL NOTES

NOTES:

1. DASHED LINES INDICATE EXISTING EQUIPMENT, CABLES, AND ENCLOSURES.
2. ONLY COMMUNICATIONS VAULTS AT KEY LOCATION SHOWN FOR CLARITY.
3. NOT ALL FIBERS ARE SHOWN FOR CLARITY. ONLY FIBERS USED FOR NETWORK ACTIVE NETWORK LINKS ARE SHOWN.
4. SEE FIBER OPTIC SPLICING SHEETS FOR ALL FIBER STRAND TREATMENTS AT EACH SPLICING LOCATION.

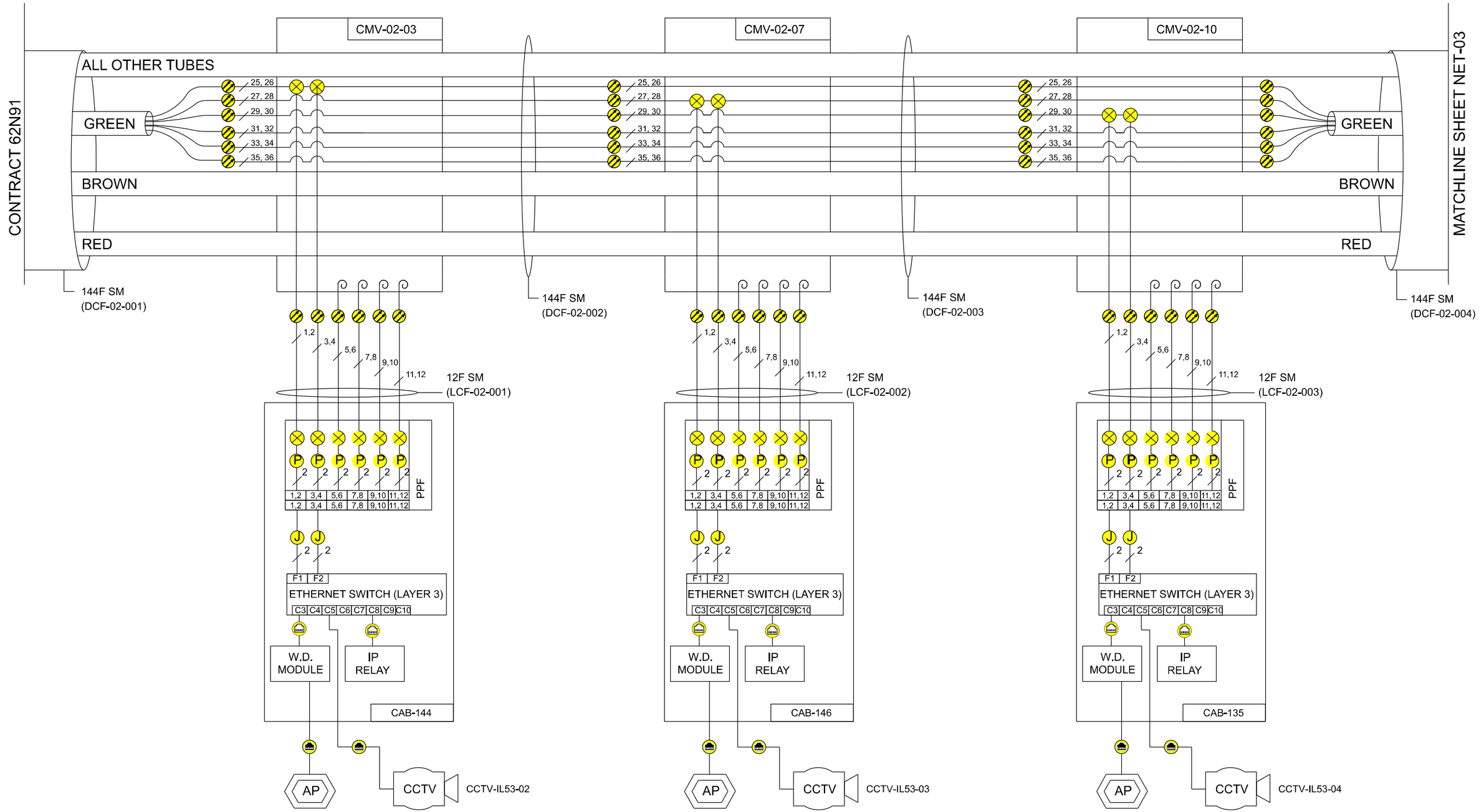

IL-53 / KIRCHOFF ROAD
(SEE SHEET ITS-25)

IL-53 / SOUTH OF EUCLID AVE
(SEE SHEET ITS-27)

IL-53 / NORTH OF EUCLID AVE
(SEE SHEET ITS-27)

ITS–66

MODEL: Default
FILE NAME: J:\22145\04_CADD\CADD_Sheets\Contract 3\D162W38-ITS-sht-ITS-XS.dgn

SINGH + ASSOCIATES, INC.
CONSULTING ENGINEERS

USER NAME = mgonzalez	DESIGNED - SG	REVISED -	
	DRAWN VN	REVISED -	
PLOT SCALE = 100.0000 ' / in.	CHECKED - RP	REVISED -	
PLOT DATE = 8/23/2024	DATE - 07/24/2024	REVISED -	

STATE OF ILLINOIS
DEPARTMENT OF TRANSPORTATION

NETWORK COMMUNICATION LINK DIAGRAM

SCALE: 1" = 50' | SHEET OF SHEETS | STA. TO STA.

F.A.P. RTE.	SECTION	COUNTY	TOTAL SHEETS	SHEET NO.
342	2018-100-BR	COOK	1211	667
		CONTRACT NO. 62W38		
		ILLINOIS	FED. AID PROJECT	

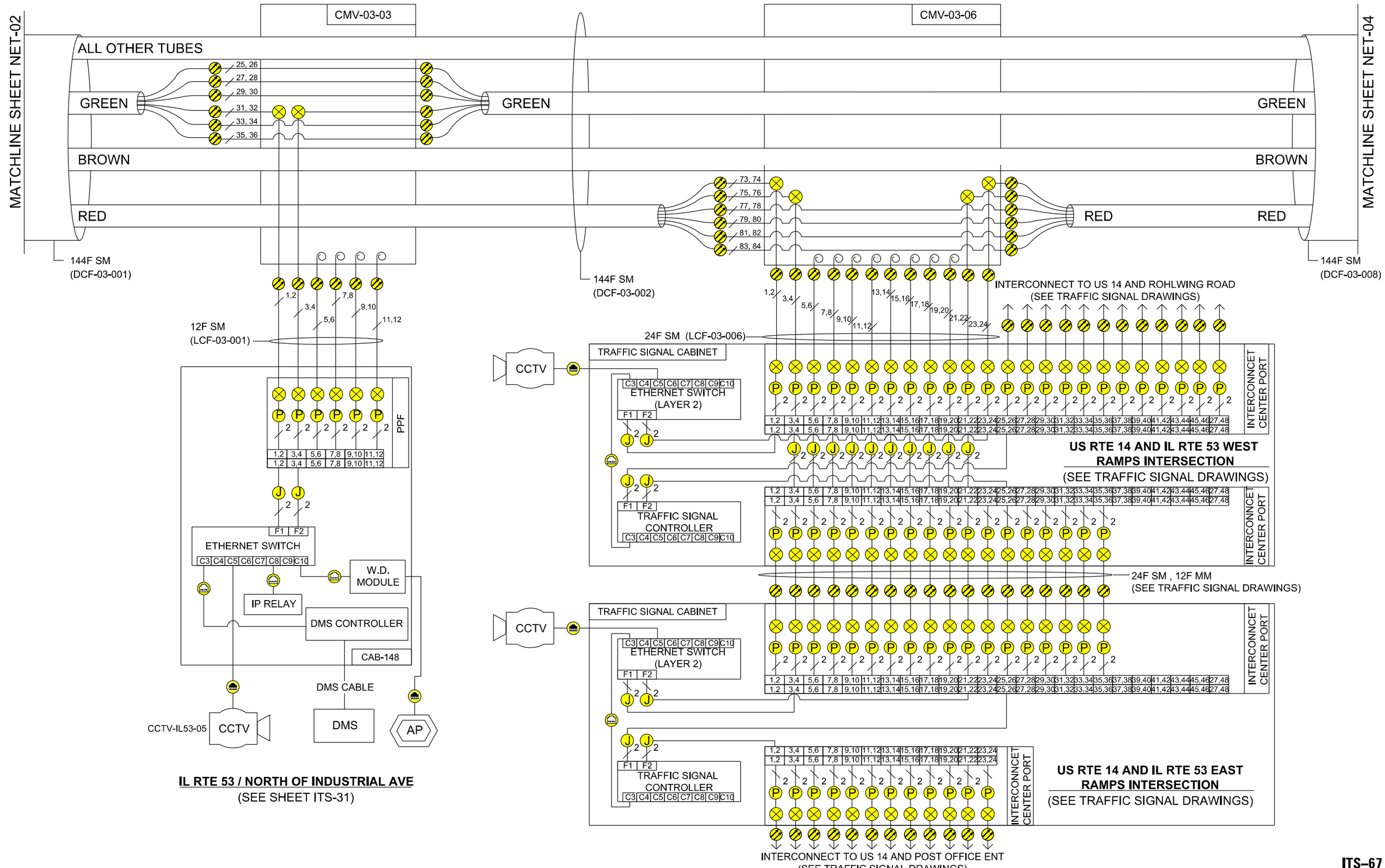

IL RTE 53 / NORTH OF INDUSTRIAL AVE
(SEE SHEET ITS-31)

ITS–67

MODEL: Default
FILE NAME: G:\PROJECTS\6300-6399\6346\113\Drawings\CAD\Micro-SS4\CAD Sheets\D162V38-ITS-Network-Communications-Link-Diagram-Rt-53-SA.dgn

STRAND ASSOCIATES
1170 SOUTH HOUBOLT ROAD
JOLIET, ILLINOIS 60431
(815) 744-4200

USER NAME = jaker	DESIGNED - MAG	REVISED -	
	DRAWN - DJW	REVISED -	
PLOT SCALE = 100.0000 ' / in.	CHECKED - DWG	REVISED -	
PLOT DATE = 8/26/2024	DATE - 8/23/2024	REVISED -	

STATE OF ILLINOIS
DEPARTMENT OF TRANSPORTATION

NETWORK COMMUNICATION LINK DIAGRAM

SCALE: NTS | SHEET 1 OF 2 SHEETS | STA. TO STA.

F.A.P. RTE.	SECTION	COUNTY	TOTAL SHEETS	SHEET NO.
342	(531) BR 23	COOK	1211	668
		CONTRACT NO. 62W38		
		ILLINOIS	FED. AID PROJECT	

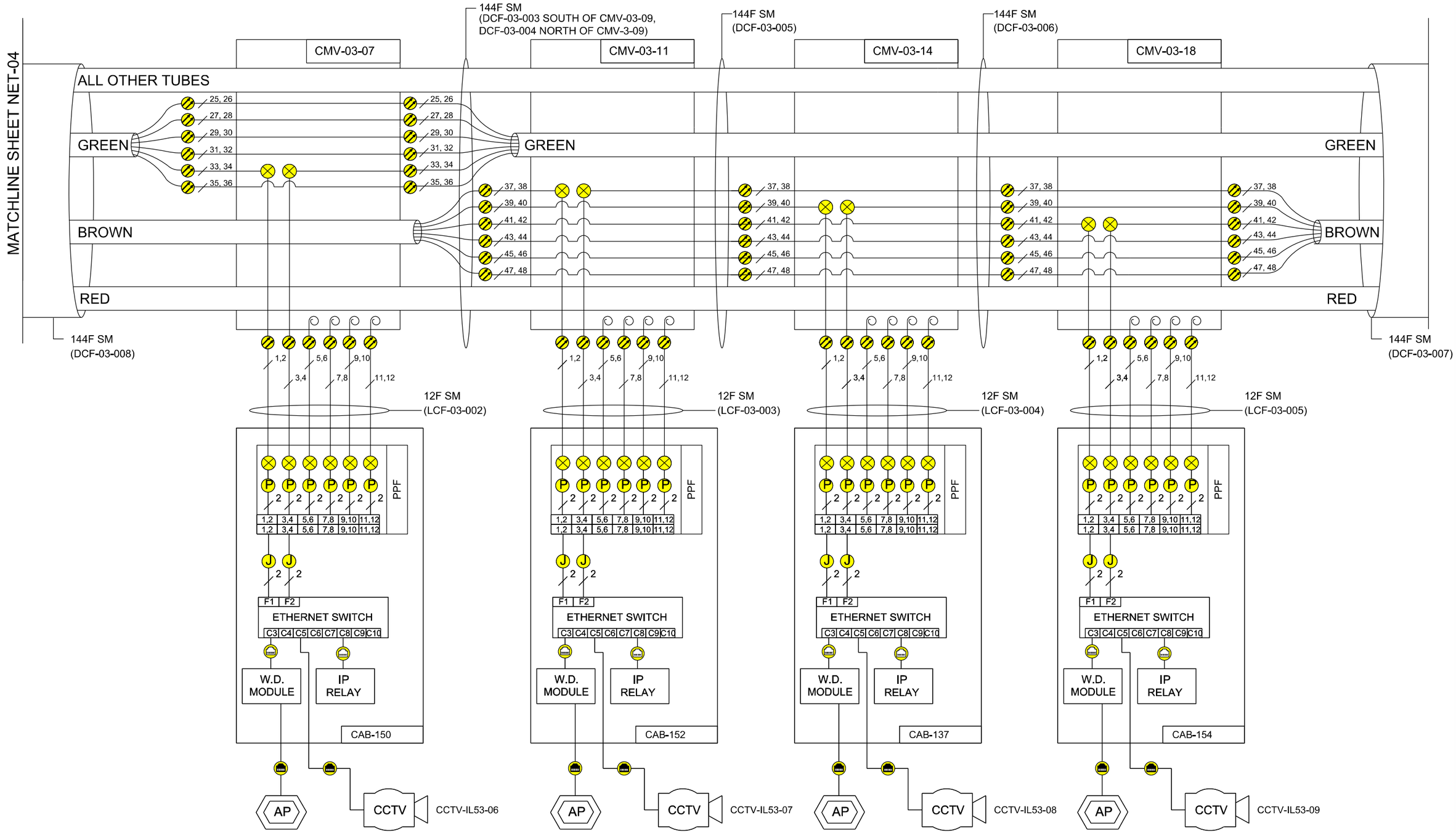

IL RTE 53 / NORTHWEST HIGHWAY
(SEE SHEET ITS-34)

IL RTE 53 / SOUTH OF PALATINE ROAD
(SEE SHEET ITS-38)

IL RTE 53 / NORTH OF PALATINE ROAD
(SEE SHEET ITS-38)

IL RTE 53 / NORTH OF ANDERSON DRIVE
(SEE SHEET ITS-42)

STRAND ASSOCIATES®
1170 SOUTH HOUBOLT ROAD
JOLIET, ILLINOIS 60431
(815) 744-4200

USER NAME = Jaker	DESIGNED - RRS	REVISED -	
	DRAWN - JLN	REVISED -	
PLOT SCALE = 100.0000 ' / in.	CHECKED - BMS	REVISED -	
PLOT DATE = 8/26/2024	DATE - 8/23/2024	REVISED -	

STATE OF ILLINOIS
DEPARTMENT OF TRANSPORTATION

NETWORK COMMUNICATION LINK DIAGRAM

SCALE: NTS | SHEET 2 OF 2 SHEETS | STA. TO STA.

F.A.P. RTE.	SECTION	COUNTY	TOTAL SHEETS	SHEET NO.
342	(531) BR 23	COOK	1211	669

CONTRACT NO. 62W38

ILLINOIS FED. AID PROJECT

MODEL: Default
FILE NAME: S:\IDOT\6300-639\06346\13\Drawings\CAD\Microsoft\SSA\CAD Sheets\D162W38-sht-ITS-Network-Communication-Link-Diagram-02413-53-SAI.dgn

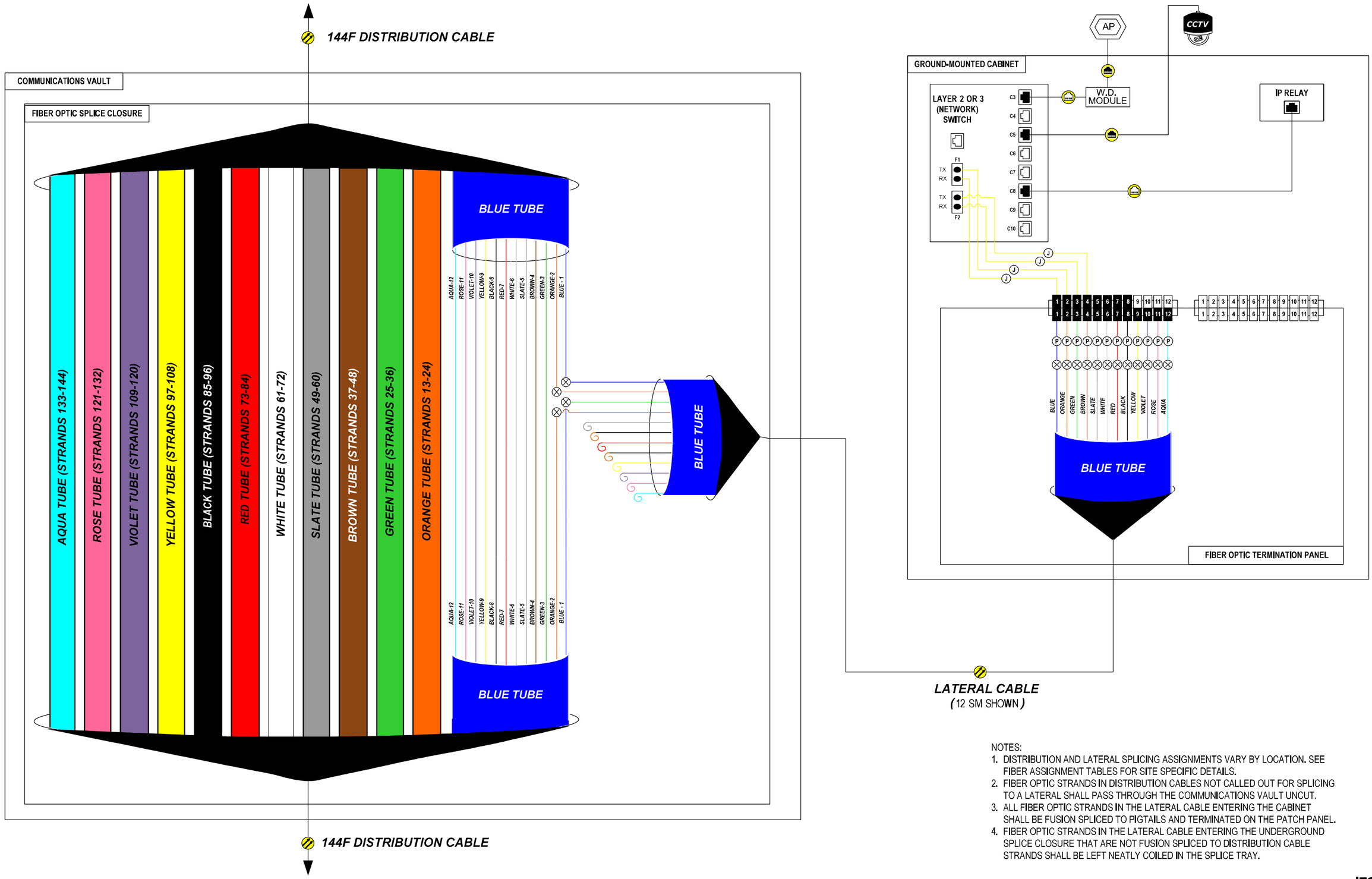

NOTES:

1. DISTRIBUTION AND LATERAL SPLICING ASSIGNMENTS VARY BY LOCATION. SEE FIBER ASSIGNMENT TABLES FOR SITE SPECIFIC DETAILS.
2. FIBER OPTIC STRANDS IN DISTRIBUTION CABLES NOT CALLED OUT FOR SPLICING TO A LATERAL SHALL PASS THROUGH THE COMMUNICATIONS VAULT UNCUT.
3. ALL FIBER OPTIC STRANDS IN THE LATERAL CABLE ENTERING THE CABINET SHALL BE FUSION SPLICED TO PIGTAILS AND TERMINATED ON THE PATCH PANEL.
4. FIBER OPTIC STRANDS IN THE LATERAL CABLE ENTERING THE UNDERGROUND SPLICE CLOSURE THAT ARE NOT FUSION SPLICED TO DISTRIBUTION CABLE STRANDS SHALL BE LEFT NEATLY COILED IN THE SPLICE TRAY.

ITS–69

MODEL: Default
FILE NAME: J:\221459\4_CADD\CADD_Sheets\Contract 3D\62W38-ldos-ahl-its-X9.dgn

SINGH
SINGH + ASSOCIATES, INC.
CONSULTING ENGINEERS

USER NAME = mgonzalez	DESIGNED - SG	REVISED -	
	DRAWN VN	REVISED -	
PLOT SCALE = 100.0000 ' / in.	CHECKED - RP	REVISED -	
PLOT DATE = 8/23/2024	DATE - 07/24/2024	REVISED -	

STATE OF ILLINOIS
DEPARTMENT OF TRANSPORTATION

TYPICAL FIBER OPTIC LATERAL SPLICE DETAIL
GROUND MOUNTED CABINETS

SCALE: 1" = 50' | SHEET OF SHEETS | STA. TO STA.

F.A.P. RTE.	SECTION	COUNTY	TOTAL SHEETS	SHEET NO.
342	2018-100-BR	COOK	1211	670
		CONTRACT NO. 62W38		
		ILLINOIS	FED. AID PROJECT	

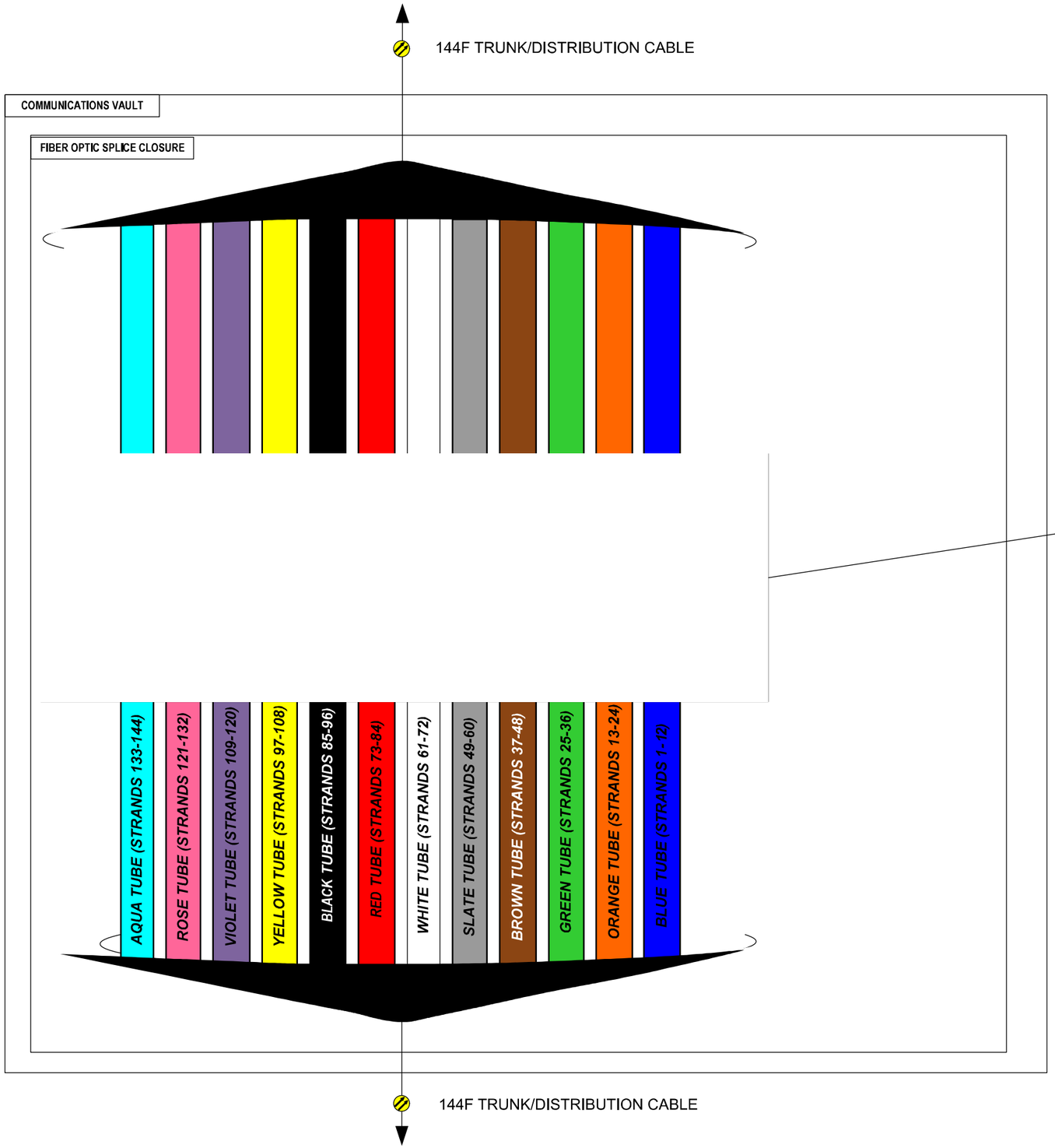

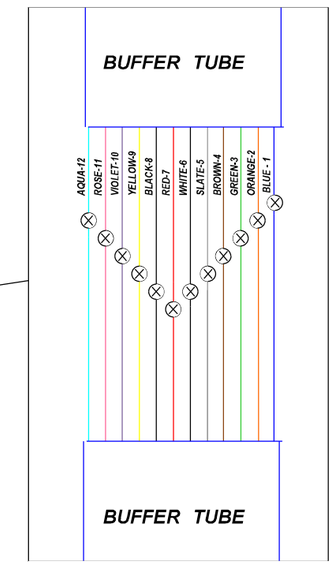

FIBER OPTIC SPLICES IN EACH BUFFER TUBE

NOTES:

1. DISTRIBUTION AND LATERAL SPLICING ASSIGNMENTS VARY BY LOCATION. SEE FIBER ASSIGNMENT TABLES FOR SITE SPECIFIC DETAILS.
2. FIBER OPTIC STRANDS IN DISTRIBUTION CABLES NOT CALLED OUT FOR SPLICING TO A LATERAL SHALL PASS THROUGH THE COMMUNICATIONS VAULT UNCUT.
3. ALL FIBER OPTIC STRANDS IN THE LATERAL CABLE ENTERING THE CABINET SHALL BE FUSION SPLICED TO PIGTAILS AND TERMINATED ON THE PATCH PANEL.
4. FIBER OPTIC STRANDS IN THE LATERAL CABLE ENTERING THE UNDERGROUND SPLICE CLOSURE THAT ARE NOT FUSION SPLICED TO DISTRIBUTION CABLE STRANDS SHALL BE LEFT NEATLY COILED IN THE SPLICE TRAY.

MODEL: Default
FILE NAME: J322145/04_CADD/CADD_Sheets/Contract 30162W38-R04-eHi-lite-X10.dgn

SINGH + ASSOCIATES, INC.
CONSULTING ENGINEERS

USER NAME = mgonzalez	DESIGNED - SG	REVISED -	
	DRAWN VN	REVISED -	
PLOT SCALE = 100.0000 ' / in.	CHECKED - RP	REVISED -	
PLOT DATE = 8/23/2024	DATE - 07/24/2024	REVISED -	

STATE OF ILLINOIS
DEPARTMENT OF TRANSPORTATION

TYPICAL FIBER OPTIC MAINLINE SPLICE DETAIL

SCALE: 1" = 50' | SHEET OF SHEETS | STA. TO STA.

F.A.P. RTE.	SECTION	COUNTY	TOTAL SHEETS	SHEET NO.
342	2018-100-BR	COOK	1211	671
		CONTRACT NO. 62W38		
		ILLINOIS	FED. AID PROJECT	

DISTRIBUTION CABLE FIBER ASSIGNMENTS				ORIGINATION	CMV-02-02		
DISTRIBUTION CABLE DESIGNATION			DCF-02-001	DESTINATION	CMV-02-03		
BUFFER TUBE	FIBER	FIBER NO.	ASSIGNMENT	BUFFER TUBE	FIBER	FIBER NO.	ASSIGNMENT
BLUE	BLUE 1	1		RED	BLUE 1	73	
	ORANGE 2	2			ORANGE 2	74	
	GREEN 3	3			GREEN 3	75	
	BROWN 4	4			BROWN 4	76	
	SLATE 5	5			SLATE 5	77	
	WHITE 6	6			WHITE 6	78	
	RED 7	7			RED 7	79	
	BLACK 8	8			BLACK 8	80	
	YELLOW 9	9			YELLOW 9	81	
	VIOLET 10	10			VIOLET 10	82	
	ROSE 11	11			ROSE 11	83	
	AQUA 12	12			AQUA 12	84	
ORANGE	BLUE 1	13		BLACK	BLUE 1	85	
	ORANGE 2	14			ORANGE 2	86	
	GREEN 3	15			GREEN 3	87	
	BROWN 4	16			BROWN 4	88	
	SLATE 5	17			SLATE 5	89	
	WHITE 6	18			WHITE 6	90	
	RED 7	19			RED 7	91	
	BLACK 8	20			BLACK 8	92	
	YELLOW 9	21			YELLOW 9	93	
	VIOLET 10	22			VIOLET 10	94	
	ROSE 11	23			ROSE 11	95	
	AQUA 12	24			AQUA 12	96	
GREEN	BLUE 1	25	LCF-02-001, FIBER 1	YELLOW	BLUE 1	97	
	ORANGE 2	26	LCF-02-001, FIBER 2		ORANGE 2	98	
	GREEN 3	27			GREEN 3	99	
	BROWN 4	28			BROWN 4	100	
	SLATE 5	29			SLATE 5	101	
	WHITE 6	30			WHITE 6	102	
	RED 7	31			RED 7	103	
	BLACK 8	32			BLACK 8	104	
	YELLOW 9	33			YELLOW 9	105	
	VIOLET 10	34			VIOLET 10	106	
	ROSE 11	35			ROSE 11	107	
	AQUA 12	36			AQUA 12	108	
BROWN	BLUE 1	37		VIOLET	BLUE 1	109	
	ORANGE 2	38			ORANGE 2	110	
	GREEN 3	39			GREEN 3	111	
	BROWN 4	40			BROWN 4	112	
	SLATE 5	41			SLATE 5	113	
	WHITE 6	42			WHITE 6	114	
	RED 7	43			RED 7	115	
	BLACK 8	44			BLACK 8	116	
	YELLOW 9	45			YELLOW 9	117	
	VIOLET 10	46			VIOLET 10	118	
	ROSE 11	47			ROSE 11	119	
	AQUA 12	48			AQUA 12	120	
SLATE	BLUE 1	49		ROSE	BLUE 1	121	
	ORANGE 2	50			ORANGE 2	122	
	GREEN 3	51			GREEN 3	123	
	BROWN 4	52			BROWN 4	124	
	SLATE 5	53			SLATE 5	125	
	WHITE 6	54			WHITE 6	126	
	RED 7	55			RED 7	127	
	BLACK 8	56			BLACK 8	128	
	YELLOW 9	57			YELLOW 9	129	
	VIOLET 10	58			VIOLET 10	130	
	ROSE 11	59			ROSE 11	131	
	AQUA 12	60			AQUA 12	132	
WHITE	BLUE 1	61		AQUA	BLUE 1	133	
	ORANGE 2	62			ORANGE 2	134	
	GREEN 3	63			GREEN 3	135	
	BROWN 4	64			BROWN 4	136	
	SLATE 5	65			SLATE 5	137	
	WHITE 6	66			WHITE 6	138	
	RED 7	67			RED 7	139	
	BLACK 8	68			BLACK 8	140	
	YELLOW 9	69			YELLOW 9	141	
	VIOLET 10	70			VIOLET 10	142	
	ROSE 11	71			ROSE 11	143	
	AQUA 12	72			AQUA 12	144	

DCF-02-001

DISTRIBUTION CABLE FIBER ASSIGNMENTS				ORIGINATION	CMV-02-03		
DISTRIBUTION CABLE DESIGNATION			DCF-02-002	DESTINATION	CMV-02-07		
BUFFER TUBE	FIBER	FIBER NO.	ASSIGNMENT	BUFFER TUBE	FIBER	FIBER NO.	ASSIGNMENT
BLUE	BLUE 1	1		RED	BLUE 1	73	
	ORANGE 2	2			ORANGE 2	74	
	GREEN 3	3			GREEN 3	75	
	BROWN 4	4			BROWN 4	76	
	SLATE 5	5			SLATE 5	77	
	WHITE 6	6			WHITE 6	78	
	RED 7	7			RED 7	79	
	BLACK 8	8			BLACK 8	80	
	YELLOW 9	9			YELLOW 9	81	
	VIOLET 10	10			VIOLET 10	82	
	ROSE 11	11			ROSE 11	83	
	AQUA 12	12			AQUA 12	84	
ORANGE	BLUE 1	13		BLACK	BLUE 1	85	
	ORANGE 2	14			ORANGE 2	86	
	GREEN 3	15			GREEN 3	87	
	BROWN 4	16			BROWN 4	88	
	SLATE 5	17			SLATE 5	89	
	WHITE 6	18			WHITE 6	90	
	RED 7	19			RED 7	91	
	BLACK 8	20			BLACK 8	92	
	YELLOW 9	21			YELLOW 9	93	
	VIOLET 10	22			VIOLET 10	94	
	ROSE 11	23			ROSE 11	95	
	AQUA 12	24			AQUA 12	96	
GREEN	BLUE 1	25	LCF-02-001, FIBER 4	YELLOW	BLUE 1	97	
	ORANGE 2	26	LCF-02-001, FIBER 3		ORANGE 2	98	
	GREEN 3	27			GREEN 3	99	
	BROWN 4	28			BROWN 4	100	
	SLATE 5	29			SLATE 5	101	
	WHITE 6	30			WHITE 6	102	
	RED 7	31			RED 7	103	
	BLACK 8	32			BLACK 8	104	
	YELLOW 9	33			YELLOW 9	105	
	VIOLET 10	34			VIOLET 10	106	
	ROSE 11	35			ROSE 11	107	
	AQUA 12	36			AQUA 12	108	
BROWN	BLUE 1	37		VIOLET	BLUE 1	109	
	ORANGE 2	38			ORANGE 2	110	
	GREEN 3	39			GREEN 3	111	
	BROWN 4	40			BROWN 4	112	
	SLATE 5	41			SLATE 5	113	
	WHITE 6	42			WHITE 6	114	
	RED 7	43			RED 7	115	
	BLACK 8	44			BLACK 8	116	
	YELLOW 9	45			YELLOW 9	117	
	VIOLET 10	46			VIOLET 10	118	
	ROSE 11	47			ROSE 11	119	
	AQUA 12	48			AQUA 12	120	
SLATE	BLUE 1	49		ROSE	BLUE 1	121	
	ORANGE 2	50			ORANGE 2	122	
	GREEN 3	51			GREEN 3	123	
	BROWN 4	52			BROWN 4	124	
	SLATE 5	53			SLATE 5	125	
	WHITE 6	54			WHITE 6	126	
	RED 7	55			RED 7	127	
	BLACK 8	56			BLACK 8	128	
	YELLOW 9	57			YELLOW 9	129	
	VIOLET 10	58			VIOLET 10	130	
	ROSE 11	59			ROSE 11	131	
	AQUA 12	60			AQUA 12	132	
WHITE	BLUE 1	61		AQUA	BLUE 1	133	
	ORANGE 2	62			ORANGE 2	134	
	GREEN 3	63			GREEN 3	135	
	BROWN 4	64			BROWN 4	136	
	SLATE 5	65			SLATE 5	137	
	WHITE 6	66			WHITE 6	138	
	RED 7	67			RED 7	139	
	BLACK 8	68			BLACK 8	140	
	YELLOW 9	69			YELLOW 9	141	
	VIOLET 10	70			VIOLET 10	142	
	ROSE 11	71			ROSE 11	143	
	AQUA 12	72			AQUA 12	144	

DCF-02-002

ITS–71

MODEL: Default
FILE NAME: \\fg01\Projects\22145\04_CADD\CADD_Sheets\Contract 3D\62W38-dds-ht-tx-x14.dgn

SINGH
SINGH + ASSOCIATES, INC.
CONSULTING ENGINEERS

USER NAME = mgonzalez	DESIGNED - SG	REVISED -
	DRAWN VN	REVISED -
PLOT SCALE = 100.0000 ' / in.	CHECKED - RP	REVISED -
PLOT DATE = 8/23/2024	DATE - 07/24/2024	REVISED -

STATE OF ILLINOIS
DEPARTMENT OF TRANSPORTATION

DISTRIBUTION CABLE FIBER ASSIGNMENTS
CMV–02–03

SCALE: N.T.S. | SHEET OF SHEETS | STA. TO STA.

F.A.P. RTE.	SECTION	COUNTY	TOTAL SHEETS	SHEET NO.
342	2018-100-BR	COOK	1211	672
		CONTRACT NO. 62W38		
	ILLINOIS	FED. AID PROJECT		

DISTRIBUTION CABLE FIBER ASSIGNMENTS				ORIGINATION	CMV-02-03		
DISTRIBUTION CABLE DESIGNATION			DCF-02-002	DESTINATION	CMV-02-07		
BUFFER TUBE	FIBER	FIBER NO.	ASSIGNMENT	BUFFER TUBE	FIBER	FIBER NO.	ASSIGNMENT
BLUE	BLUE 1	1		RED	BLUE 1	73	
	ORANGE 2	2			ORANGE 2	74	
	GREEN 3	3			GREEN 3	75	
	BROWN 4	4			BROWN 4	76	
	SLATE 5	5			SLATE 5	77	
	WHITE 6	6			WHITE 6	78	
	RED 7	7			RED 7	79	
	BLACK 8	8			BLACK 8	80	
	YELLOW 9	9			YELLOW 9	81	
	VIOLET 10	10			VIOLET 10	82	
	ROSE 11	11			ROSE 11	83	
	AQUA 12	12			AQUA 12	84	
ORANGE	BLUE 1	13		BLACK	BLUE 1	85	
	ORANGE 2	14			ORANGE 2	86	
	GREEN 3	15			GREEN 3	87	
	BROWN 4	16			BROWN 4	88	
	SLATE 5	17			SLATE 5	89	
	WHITE 6	18			WHITE 6	90	
	RED 7	19			RED 7	91	
	BLACK 8	20			BLACK 8	92	
	YELLOW 9	21			YELLOW 9	93	
	VIOLET 10	22			VIOLET 10	94	
	ROSE 11	23			ROSE 11	95	
	AQUA 12	24			AQUA 12	96	
GREEN	BLUE 1	25		YELLOW	BLUE 1	97	
	ORANGE 2	26			ORANGE 2	98	
	GREEN 3	27	LCF-02-002, FIBER 1		GREEN 3	99	
	BROWN 4	28	LCF-02-002, FIBER 2		BROWN 4	100	
	SLATE 5	29			SLATE 5	101	
	WHITE 6	30			WHITE 6	102	
	RED 7	31			RED 7	103	
	BLACK 8	32			BLACK 8	104	
	YELLOW 9	33			YELLOW 9	105	
	VIOLET 10	34			VIOLET 10	106	
	ROSE 11	35			ROSE 11	107	
	AQUA 12	36			AQUA 12	108	
BROWN	BLUE 1	37		VIOLET	BLUE 1	109	
	ORANGE 2	38			ORANGE 2	110	
	GREEN 3	39			GREEN 3	111	
	BROWN 4	40			BROWN 4	112	
	SLATE 5	41			SLATE 5	113	
	WHITE 6	42			WHITE 6	114	
	RED 7	43			RED 7	115	
	BLACK 8	44			BLACK 8	116	
	YELLOW 9	45			YELLOW 9	117	
	VIOLET 10	46			VIOLET 10	118	
	ROSE 11	47			ROSE 11	119	
	AQUA 12	48			AQUA 12	120	
SLATE	BLUE 1	49		ROSE	BLUE 1	121	
	ORANGE 2	50			ORANGE 2	122	
	GREEN 3	51			GREEN 3	123	
	BROWN 4	52			BROWN 4	124	
	SLATE 5	53			SLATE 5	125	
	WHITE 6	54			WHITE 6	126	
	RED 7	55			RED 7	127	
	BLACK 8	56			BLACK 8	128	
	YELLOW 9	57			YELLOW 9	129	
	VIOLET 10	58			VIOLET 10	130	
	ROSE 11	59			ROSE 11	131	
	AQUA 12	60			AQUA 12	132	
WHITE	BLUE 1	61		AQUA	BLUE 1	133	
	ORANGE 2	62			ORANGE 2	134	
	GREEN 3	63			GREEN 3	135	
	BROWN 4	64			BROWN 4	136	
	SLATE 5	65			SLATE 5	137	
	WHITE 6	66			WHITE 6	138	
	RED 7	67			RED 7	139	
	BLACK 8	68			BLACK 8	140	
	YELLOW 9	69			YELLOW 9	141	
	VIOLET 10	70			VIOLET 10	142	
	ROSE 11	71			ROSE 11	143	
	AQUA 12	72			AQUA 12	144	

DCF-02-002

DISTRIBUTION CABLE FIBER ASSIGNMENTS				ORIGINATION	CMV-02-07		
DISTRIBUTION CABLE DESIGNATION			DCF-02-002	DESTINATION	CMV-02-10		
BUFFER TUBE	FIBER	FIBER NO.	ASSIGNMENT	BUFFER TUBE	FIBER	FIBER NO.	ASSIGNMENT
BLUE	BLUE 1	1		RED	BLUE 1	73	
	ORANGE 2	2			ORANGE 2	74	
	GREEN 3	3			GREEN 3	75	
	BROWN 4	4			BROWN 4	76	
	SLATE 5	5			SLATE 5	77	
	WHITE 6	6			WHITE 6	78	
	RED 7	7			RED 7	79	
	BLACK 8	8			BLACK 8	80	
	YELLOW 9	9			YELLOW 9	81	
	VIOLET 10	10			VIOLET 10	82	
	ROSE 11	11			ROSE 11	83	
	AQUA 12	12			AQUA 12	84	
ORANGE	BLUE 1	13		BLACK	BLUE 1	85	
	ORANGE 2	14			ORANGE 2	86	
	GREEN 3	15			GREEN 3	87	
	BROWN 4	16			BROWN 4	88	
	SLATE 5	17			SLATE 5	89	
	WHITE 6	18			WHITE 6	90	
	RED 7	19			RED 7	91	
	BLACK 8	20			BLACK 8	92	
	YELLOW 9	21			YELLOW 9	93	
	VIOLET 10	22			VIOLET 10	94	
	ROSE 11	23			ROSE 11	95	
	AQUA 12	24			AQUA 12	96	
GREEN	BLUE 1	25		YELLOW	BLUE 1	97	
	ORANGE 2	26			ORANGE 2	98	
	GREEN 3	27	LCF-02-002, FIBER 4		GREEN 3	99	
	BROWN 4	28	LCF-02-002, FIBER 3		BROWN 4	100	
	SLATE 5	29			SLATE 5	101	
	WHITE 6	30			WHITE 6	102	
	RED 7	31			RED 7	103	
	BLACK 8	32			BLACK 8	104	
	YELLOW 9	33			YELLOW 9	105	
	VIOLET 10	34			VIOLET 10	106	
	ROSE 11	35			ROSE 11	107	
	AQUA 12	36			AQUA 12	108	
BROWN	BLUE 1	37		VIOLET	BLUE 1	109	
	ORANGE 2	38			ORANGE 2	110	
	GREEN 3	39			GREEN 3	111	
	BROWN 4	40			BROWN 4	112	
	SLATE 5	41			SLATE 5	113	
	WHITE 6	42			WHITE 6	114	
	RED 7	43			RED 7	115	
	BLACK 8	44			BLACK 8	116	
	YELLOW 9	45			YELLOW 9	117	
	VIOLET 10	46			VIOLET 10	118	
	ROSE 11	47			ROSE 11	119	
	AQUA 12	48			AQUA 12	120	
SLATE	BLUE 1	49		ROSE	BLUE 1	121	
	ORANGE 2	50			ORANGE 2	122	
	GREEN 3	51			GREEN 3	123	
	BROWN 4	52			BROWN 4	124	
	SLATE 5	53			SLATE 5	125	
	WHITE 6	54			WHITE 6	126	
	RED 7	55			RED 7	127	
	BLACK 8	56			BLACK 8	128	
	YELLOW 9	57			YELLOW 9	129	
	VIOLET 10	58			VIOLET 10	130	
	ROSE 11	59			ROSE 11	131	
	AQUA 12	60			AQUA 12	132	
WHITE	BLUE 1	61		AQUA	BLUE 1	133	
	ORANGE 2	62			ORANGE 2	134	
	GREEN 3	63			GREEN 3	135	
	BROWN 4	64			BROWN 4	136	
	SLATE 5	65			SLATE 5	137	
	WHITE 6	66			WHITE 6	138	
	RED 7	67			RED 7	139	
	BLACK 8	68			BLACK 8	140	
	YELLOW 9	69			YELLOW 9	141	
	VIOLET 10	70			VIOLET 10	142	
	ROSE 11	71			ROSE 11	143	
	AQUA 12	72			AQUA 12	144	

DCF-02-003

ITS–72

MODEL: Default
FILE NAME: \\fa01\Projects\22145\04_CADD\CADD_Sheets\Contract 31\62W38-ddts-lht-tx-x15.dgn

SINGH
SINGH + ASSOCIATES, INC.
CONSULTING ENGINEERS

USER NAME = mgonzalez	DESIGNED - SG	REVISED -
	DRAWN VN	REVISED -
PLOT SCALE = 100.0000 ' / in.	CHECKED - RP	REVISED -
PLOT DATE = 8/23/2024	DATE - 07/24/2024	REVISED -

STATE OF ILLINOIS
DEPARTMENT OF TRANSPORTATION

DISTRIBUTION CABLE FIBER ASSIGNMENTS
CMV–02–07

SCALE: N.T.S. | SHEET OF SHEETS | STA. TO STA.

F.A.P. RTE.	SECTION	COUNTY	TOTAL SHEETS	SHEET NO.
342	2018-100-BR	COOK	1211	673
		CONTRACT NO. 62W38		
	ILLINOIS	FED. AID PROJECT		

DISTRIBUTION CABLE FIBER ASSIGNMENTS				ORIGINATION	CMV-02-01		
DISTRIBUTION CABLE DESIGNATION			DCF-02-002	DESTINATION	CMV-02-10		
BUFFER TUBE	FIBER	FIBER NO.	ASSIGNMENT	BUFFER TUBE	FIBER	FIBER NO.	ASSIGNMENT
BLUE	BLUE 1	1		RED	BLUE 1	73	
	ORANGE 2	2			ORANGE 2	74	
	GREEN 3	3			GREEN 3	75	
	BROWN 4	4			BROWN 4	76	
	SLATE 5	5			SLATE 5	77	
	WHITE 6	6			WHITE 6	78	
	RED 7	7			RED 7	79	
	BLACK 8	8			BLACK 8	80	
	YELLOW 9	9			YELLOW 9	81	
	VIOLET 10	10			VIOLET 10	82	
	ROSE 11	11			ROSE 11	83	
	AQUA 12	12			AQUA 12	84	
ORANGE	BLUE 1	13		BLACK	BLUE 1	85	
	ORANGE 2	14			ORANGE 2	86	
	GREEN 3	15			GREEN 3	87	
	BROWN 4	16			BROWN 4	88	
	SLATE 5	17			SLATE 5	89	
	WHITE 6	18			WHITE 6	90	
	RED 7	19			RED 7	91	
	BLACK 8	20			BLACK 8	92	
	YELLOW 9	21			YELLOW 9	93	
	VIOLET 10	22			VIOLET 10	94	
	ROSE 11	23			ROSE 11	95	
	AQUA 12	24			AQUA 12	96	
GREEN	BLUE 1	25		YELLOW	BLUE 1	97	
	ORANGE 2	26			ORANGE 2	98	
	GREEN 3	27			GREEN 3	99	
	BROWN 4	28			BROWN 4	100	
	SLATE 5	29	LCF-02-003, FIBER 1		SLATE 5	101	
	WHITE 6	30	LCF-02-003, FIBER 2		WHITE 6	102	
	RED 7	31			RED 7	103	
	BLACK 8	32			BLACK 8	104	
	YELLOW 9	33			YELLOW 9	105	
	VIOLET 10	34			VIOLET 10	106	
	ROSE 11	35			ROSE 11	107	
	AQUA 12	36			AQUA 12	108	
BROWN	BLUE 1	37		VIOLET	BLUE 1	109	
	ORANGE 2	38			ORANGE 2	110	
	GREEN 3	39			GREEN 3	111	
	BROWN 4	40			BROWN 4	112	
	SLATE 5	41			SLATE 5	113	
	WHITE 6	42			WHITE 6	114	
	RED 7	43			RED 7	115	
	BLACK 8	44			BLACK 8	116	
	YELLOW 9	45			YELLOW 9	117	
	VIOLET 10	46			VIOLET 10	118	
	ROSE 11	47			ROSE 11	119	
	AQUA 12	48			AQUA 12	120	
SLATE	BLUE 1	49		ROSE	BLUE 1	121	
	ORANGE 2	50			ORANGE 2	122	
	GREEN 3	51			GREEN 3	123	
	BROWN 4	52			BROWN 4	124	
	SLATE 5	53			SLATE 5	125	
	WHITE 6	54			WHITE 6	126	
	RED 7	55			RED 7	127	
	BLACK 8	56			BLACK 8	128	
	YELLOW 9	57			YELLOW 9	129	
	VIOLET 10	58			VIOLET 10	130	
	ROSE 11	59			ROSE 11	131	
	AQUA 12	60			AQUA 12	132	
WHITE	BLUE 1	61		AQUA	BLUE 1	133	
	ORANGE 2	62			ORANGE 2	134	
	GREEN 3	63			GREEN 3	135	
	BROWN 4	64			BROWN 4	136	
	SLATE 5	65			SLATE 5	137	
	WHITE 6	66			WHITE 6	138	
	RED 7	67			RED 7	139	
	BLACK 8	68			BLACK 8	140	
	YELLOW 9	69			YELLOW 9	141	
	VIOLET 10	70			VIOLET 10	142	
	ROSE 11	71			ROSE 11	143	
	AQUA 12	72			AQUA 12	144	

DCF-03-003

DISTRIBUTION CABLE FIBER ASSIGNMENTS				ORIGINATION	CMV-02-10		
DISTRIBUTION CABLE DESIGNATION			DCF-02-002	DESTINATION	CMV-03-01		
BUFFER TUBE	FIBER	FIBER NO.	ASSIGNMENT	BUFFER TUBE	FIBER	FIBER NO.	ASSIGNMENT
BLUE	BLUE 1	1		RED	BLUE 1	73	
	ORANGE 2	2			ORANGE 2	74	
	GREEN 3	3			GREEN 3	75	
	BROWN 4	4			BROWN 4	76	
	SLATE 5	5			SLATE 5	77	
	WHITE 6	6			WHITE 6	78	
	RED 7	7			RED 7	79	
	BLACK 8	8			BLACK 8	80	
	YELLOW 9	9			YELLOW 9	81	
	VIOLET 10	10			VIOLET 10	82	
	ROSE 11	11			ROSE 11	83	
	AQUA 12	12			AQUA 12	84	
ORANGE	BLUE 1	13		BLACK	BLUE 1	85	
	ORANGE 2	14			ORANGE 2	86	
	GREEN 3	15			GREEN 3	87	
	BROWN 4	16			BROWN 4	88	
	SLATE 5	17			SLATE 5	89	
	WHITE 6	18			WHITE 6	90	
	RED 7	19			RED 7	91	
	BLACK 8	20			BLACK 8	92	
	YELLOW 9	21			YELLOW 9	93	
	VIOLET 10	22			VIOLET 10	94	
	ROSE 11	23			ROSE 11	95	
	AQUA 12	24			AQUA 12	96	
GREEN	BLUE 1	25		YELLOW	BLUE 1	97	
	ORANGE 2	26			ORANGE 2	98	
	GREEN 3	27			GREEN 3	99	
	BROWN 4	28			BROWN 4	100	
	SLATE 5	29	LCF-02-003, FIBER 4		SLATE 5	101	
	WHITE 6	30	LCF-02-003, FIBER 3		WHITE 6	102	
	RED 7	31			RED 7	103	
	BLACK 8	32			BLACK 8	104	
	YELLOW 9	33			YELLOW 9	105	
	VIOLET 10	34			VIOLET 10	106	
	ROSE 11	35			ROSE 11	107	
	AQUA 12	36			AQUA 12	108	
BROWN	BLUE 1	37		VIOLET	BLUE 1	109	
	ORANGE 2	38			ORANGE 2	110	
	GREEN 3	39			GREEN 3	111	
	BROWN 4	40			BROWN 4	112	
	SLATE 5	41			SLATE 5	113	
	WHITE 6	42			WHITE 6	114	
	RED 7	43			RED 7	115	
	BLACK 8	44			BLACK 8	116	
	YELLOW 9	45			YELLOW 9	117	
	VIOLET 10	46			VIOLET 10	118	
	ROSE 11	47			ROSE 11	119	
	AQUA 12	48			AQUA 12	120	
SLATE	BLUE 1	49		ROSE	BLUE 1	121	
	ORANGE 2	50			ORANGE 2	122	
	GREEN 3	51			GREEN 3	123	
	BROWN 4	52			BROWN 4	124	
	SLATE 5	53			SLATE 5	125	
	WHITE 6	54			WHITE 6	126	
	RED 7	55			RED 7	127	
	BLACK 8	56			BLACK 8	128	
	YELLOW 9	57			YELLOW 9	129	
	VIOLET 10	58			VIOLET 10	130	
	ROSE 11	59			ROSE 11	131	
	AQUA 12	60			AQUA 12	132	
WHITE	BLUE 1	61		AQUA	BLUE 1	133	
	ORANGE 2	62			ORANGE 2	134	
	GREEN 3	63			GREEN 3	135	
	BROWN 4	64			BROWN 4	136	
	SLATE 5	65			SLATE 5	137	
	WHITE 6	66			WHITE 6	138	
	RED 7	67			RED 7	139	
	BLACK 8	68			BLACK 8	140	
	YELLOW 9	69			YELLOW 9	141	
	VIOLET 10	70			VIOLET 10	142	
	ROSE 11	71			ROSE 11	143	
	AQUA 12	72			AQUA 12	144	

DCF-03-004

ITS–73

MODEL: Default
FILE NAME: \\fsg1\Projects\22145\04_CADD\CADD_Sheets\Contract 3\0162W38-ddts-ln-tx-x16.dgn

SINGH
SINGH + ASSOCIATES, INC.
CONSULTING ENGINEERS

USER NAME = mgonzalez	DESIGNED - SG	REVISED -
	DRAWN VN	REVISED -
PLOT SCALE = 100.0000 ' / in.	CHECKED - RP	REVISED -
PLOT DATE = 8/23/2024	DATE - 07/24/2024	REVISED -

STATE OF ILLINOIS
DEPARTMENT OF TRANSPORTATION

DISTRIBUTION CABLE FIBER ASSIGNMENTS
CMV–02–10

SCALE: N.T.S. | SHEET OF SHEETS | STA. TO STA.

F.A.P. RTE.	SECTION	COUNTY	TOTAL SHEETS	SHEET NO.
342	2018-100-BR	COOK	1211	674
		CONTRACT NO. 62W38		
	ILLINOIS	FED. AID PROJECT		

DISTRIBUTION CABLE FIBER ASSIGNMENTS				ORIGINATION	CMV-03-03		
DISTRIBUTION CABLE DESIGNATION			DCF-03-001	DESTINATION	CMV-03-01		
BUFFER TUBE	FIBER	FIBER NO.	ASSIGNMENT	BUFFER TUBE	FIBER	FIBER NO.	ASSIGNMENT
BLUE	BLUE 1	1		RED	BLUE 1	73	
	ORANGE 2	2			ORANGE 2	74	
	GREEN 3	3			GREEN 3	75	
	BROWN 4	4			BROWN 4	76	
	SLATE 5	5			SLATE 5	77	
	WHITE 6	6			WHITE 6	78	
	RED 7	7			RED 7	79	
	BLACK 8	8			BLACK 8	80	
	YELLOW 9	9			YELLOW 9	81	
	VIOLET 10	10			VIOLET 10	82	
	ROSE 11	11			ROSE 11	83	
	AQUA 12	12			AQUA 12	84	
ORANGE	BLUE 1	13		BLACK	BLUE 1	85	
	ORANGE 2	14			ORANGE 2	86	
	GREEN 3	15			GREEN 3	87	
	BROWN 4	16			BROWN 4	88	
	SLATE 5	17			SLATE 5	89	
	WHITE 6	18			WHITE 6	90	
	RED 7	19			RED 7	91	
	BLACK 8	20			BLACK 8	92	
	YELLOW 9	21			YELLOW 9	93	
	VIOLET 10	22			VIOLET 10	94	
	ROSE 11	23			ROSE 11	95	
	AQUA 12	24			AQUA 12	96	
GREEN	BLUE 1	25		YELLOW	BLUE 1	97	
	ORANGE 2	26			ORANGE 2	98	
	GREEN 3	27			GREEN 3	99	
	BROWN 4	28			BROWN 4	100	
	SLATE 5	29			SLATE 5	101	
	WHITE 6	30			WHITE 6	102	
	RED 7	31	LCF-03-001, FIBER 1		RED 7	103	
	BLACK 8	32	LCF-03-001, FIBER 2		BLACK 8	104	
	YELLOW 9	33			YELLOW 9	105	
	VIOLET 10	34			VIOLET 10	106	
	ROSE 11	35			ROSE 11	107	
	AQUA 12	36			AQUA 12	108	
BROWN	BLUE 1	37		VIOLET	BLUE 1	109	
	ORANGE 2	38			ORANGE 2	110	
	GREEN 3	39			GREEN 3	111	
	BROWN 4	40			BROWN 4	112	
	SLATE 5	41			SLATE 5	113	
	WHITE 6	42			WHITE 6	114	
	RED 7	43			RED 7	115	
	BLACK 8	44			BLACK 8	116	
	YELLOW 9	45			YELLOW 9	117	
	VIOLET 10	46			VIOLET 10	118	
	ROSE 11	47			ROSE 11	119	
	AQUA 12	48			AQUA 12	120	
SLATE	BLUE 1	49		ROSE	BLUE 1	121	
	ORANGE 2	50			ORANGE 2	122	
	GREEN 3	51			GREEN 3	123	
	BROWN 4	52			BROWN 4	124	
	SLATE 5	53			SLATE 5	125	
	WHITE 6	54			WHITE 6	126	
	RED 7	55			RED 7	127	
	BLACK 8	56			BLACK 8	128	
	YELLOW 9	57			YELLOW 9	129	
	VIOLET 10	58			VIOLET 10	130	
	ROSE 11	59			ROSE 11	131	
	AQUA 12	60			AQUA 12	132	
WHITE	BLUE 1	61		AQUA	BLUE 1	133	
	ORANGE 2	62			ORANGE 2	134	
	GREEN 3	63			GREEN 3	135	
	BROWN 4	64			BROWN 4	136	
	SLATE 5	65			SLATE 5	137	
	WHITE 6	66			WHITE 6	138	
	RED 7	67			RED 7	139	
	BLACK 8	68			BLACK 8	140	
	YELLOW 9	69			YELLOW 9	141	
	VIOLET 10	70			VIOLET 10	142	
	ROSE 11	71			ROSE 11	143	
	AQUA 12	72			AQUA 12	144	

DCF-03-001

DISTRIBUTION CABLE FIBER ASSIGNMENTS				ORIGINATION	CMV-03-03		
DISTRIBUTION CABLE DESIGNATION			DCF-03-002	DESTINATION	CMV-03-06		
BUFFER TUBE	FIBER	FIBER NO.	ASSIGNMENT	BUFFER TUBE	FIBER	FIBER NO.	ASSIGNMENT
BLUE	BLUE 1	1		RED	BLUE 1	73	
	ORANGE 2	2			ORANGE 2	74	
	GREEN 3	3			GREEN 3	75	
	BROWN 4	4			BROWN 4	76	
	SLATE 5	5			SLATE 5	77	
	WHITE 6	6			WHITE 6	78	
	RED 7	7			RED 7	79	
	BLACK 8	8			BLACK 8	80	
	YELLOW 9	9			YELLOW 9	81	
	VIOLET 10	10			VIOLET 10	82	
	ROSE 11	11			ROSE 11	83	
	AQUA 12	12			AQUA 12	84	
ORANGE	BLUE 1	13		BLACK	BLUE 1	85	
	ORANGE 2	14			ORANGE 2	86	
	GREEN 3	15			GREEN 3	87	
	BROWN 4	16			BROWN 4	88	
	SLATE 5	17			SLATE 5	89	
	WHITE 6	18			WHITE 6	90	
	RED 7	19			RED 7	91	
	BLACK 8	20			BLACK 8	92	
	YELLOW 9	21			YELLOW 9	93	
	VIOLET 10	22			VIOLET 10	94	
	ROSE 11	23			ROSE 11	95	
	AQUA 12	24			AQUA 12	96	
GREEN	BLUE 1	25		YELLOW	BLUE 1	97	
	ORANGE 2	26			ORANGE 2	98	
	GREEN 3	27			GREEN 3	99	
	BROWN 4	28			BROWN 4	100	
	SLATE 5	29			SLATE 5	101	
	WHITE 6	30			WHITE 6	102	
	RED 7	31	LCF-03-001, FIBER 4		RED 7	103	
	BLACK 8	32	LCF-03-001, FIBER 3		BLACK 8	104	
	YELLOW 9	33			YELLOW 9	105	
	VIOLET 10	34			VIOLET 10	106	
	ROSE 11	35			ROSE 11	107	
	AQUA 12	36			AQUA 12	108	
BROWN	BLUE 1	37		VIOLET	BLUE 1	109	
	ORANGE 2	38			ORANGE 2	110	
	GREEN 3	39			GREEN 3	111	
	BROWN 4	40			BROWN 4	112	
	SLATE 5	41			SLATE 5	113	
	WHITE 6	42			WHITE 6	114	
	RED 7	43			RED 7	115	
	BLACK 8	44			BLACK 8	116	
	YELLOW 9	45			YELLOW 9	117	
	VIOLET 10	46			VIOLET 10	118	
	ROSE 11	47			ROSE 11	119	
	AQUA 12	48			AQUA 12	120	
SLATE	BLUE 1	49		ROSE	BLUE 1	121	
	ORANGE 2	50			ORANGE 2	122	
	GREEN 3	51			GREEN 3	123	
	BROWN 4	52			BROWN 4	124	
	SLATE 5	53			SLATE 5	125	
	WHITE 6	54			WHITE 6	126	
	RED 7	55			RED 7	127	
	BLACK 8	56			BLACK 8	128	
	YELLOW 9	57			YELLOW 9	129	
	VIOLET 10	58			VIOLET 10	130	
	ROSE 11	59			ROSE 11	131	
	AQUA 12	60			AQUA 12	132	
WHITE	BLUE 1	61		AQUA	BLUE 1	133	
	ORANGE 2	62			ORANGE 2	134	
	GREEN 3	63			GREEN 3	135	
	BROWN 4	64			BROWN 4	136	
	SLATE 5	65			SLATE 5	137	
	WHITE 6	66			WHITE 6	138	
	RED 7	67			RED 7	139	
	BLACK 8	68			BLACK 8	140	
	YELLOW 9	69			YELLOW 9	141	
	VIOLET 10	70			VIOLET 10	142	
	ROSE 11	71			ROSE 11	143	
	AQUA 12	72			AQUA 12	144	

DCF-03-002

STRAND ASSOCIATES®
1170 SOUTH HOUBOLT ROAD
JOLIET, ILLINOIS 60431
(815) 744-4200

USER NAME = jaker	DESIGNED - RRS	REVISED -	
	DRAWN - JLN	REVISED -	
PLOT SCALE = 100.0000 ' / in.	CHECKED - BMS	REVISED -	
PLOT DATE = 8/26/2024	DATE - 8/23/2024	REVISED -	

STATE OF ILLINOIS
DEPARTMENT OF TRANSPORTATION

DISTRIBUTION CABLE FIBER ASSIGNMENTS
CMV–03–03

SCALE: NTS | SHEET 1 OF 1 SHEETS | STA. | TO STA.

F.A.P. RTE.	SECTION	COUNTY	TOTAL SHEETS	SHEET NO.
342	(531) BR 23	COOK	1211	675
		CONTRACT NO. 62W38		
	ILLINOIS	FED. AID PROJECT		

MODEL: Default
FILE NAME: S:\JOL\6300-6399\6346\13\Drawings\CADd\Micro-SS4\CAD_Sheets\D162W38-sht-ITS-DCFA-01-L13-SA1.dgn

DISTRIBUTION CABLE FIBER ASSIGNMENTS				ORIGINATION	CMV-03-06		
DISTRIBUTION CABLE DESIGNATION			DCF-03-002	DESTINATION	CMV-03-03		
BUFFER TUBE	FIBER	FIBER NO.	ASSIGNMENT	BUFFER TUBE	FIBER	FIBER NO.	ASSIGNMENT
BLUE	BLUE 1	1		RED	BLUE 1	73	LCF-03-006, FIBER 1
	ORANGE 2	2			ORANGE 2	74	LCF-03-006, FIBER 2
	GREEN 3	3			GREEN 3	75	LCF-03-006, FIBER 3
	BROWN 4	4			BROWN 4	76	LCF-03-006, FIBER 4
	SLATE 5	5			SLATE 5	77	LCF-03-006, FIBER 5
	WHITE 6	6			WHITE 6	78	LCF-03-006, FIBER 6
	RED 7	7			RED 7	79	LCF-03-006, FIBER 7
	BLACK 8	8			BLACK 8	80	LCF-03-006, FIBER 8
	YELLOW 9	9			YELLOW 9	81	LCF-03-006, FIBER 9
	VIOLET 1	10			VIOLET 10	82	LCF-03-006, FIBER 10
	ROSE 11	11			ROSE 11	83	LCF-03-006, FIBER 11
	AQUA 1	12			AQUA 12	84	LCF-03-006, FIBER 12
ORANGE	BLUE 1	13		BLACK	BLUE 1	85	
	ORANGE 2	14			ORANGE 2	86	
	GREEN 3	15			GREEN 3	87	
	BROWN 4	16			BROWN 4	88	
	SLATE 5	17			SLATE 5	89	
	WHITE 6	18			WHITE 6	90	
	RED 7	19			RED 7	91	
	BLACK 8	20			BLACK 8	92	
	YELLOW 9	21			YELLOW 9	93	
	VIOLET 1	22			VIOLET 10	94	
	ROSE 11	23			ROSE 11	95	
	AQUA 1	24			AQUA 12	96	
GREEN	BLUE 1	25		YELLOW	BLUE 1	97	
	ORANGE 2	26			ORANGE 2	98	
	GREEN 3	27			GREEN 3	99	
	BROWN 4	28			BROWN 4	100	
	SLATE 5	29			SLATE 5	101	
	WHITE 6	30			WHITE 6	102	
	RED 7	31			RED 7	103	
	BLACK 8	32			BLACK 8	104	
	YELLOW 9	33			YELLOW 9	105	
	VIOLET 1	34			VIOLET 10	106	
	ROSE 11	35			ROSE 11	107	
	AQUA 1	36			AQUA 12	108	
BROWN	BLUE 1	37		VIOLET	BLUE 1	109	
	ORANGE 2	38			ORANGE 2	110	
	GREEN 3	39			GREEN 3	111	
	BROWN 4	40			BROWN 4	112	
	SLATE 5	41			SLATE 5	113	
	WHITE 6	42			WHITE 6	114	
	RED 7	43			RED 7	115	
	BLACK 8	44			BLACK 8	116	
	YELLOW 9	45			YELLOW 9	117	
	VIOLET 1	46			VIOLET 10	118	
	ROSE 11	47			ROSE 11	119	
	AQUA 1	48			AQUA 12	120	
SLATE	BLUE 1	49		ROSE	BLUE 1	121	
	ORANGE 2	50			ORANGE 2	122	
	GREEN 3	51			GREEN 3	123	
	BROWN 4	52			BROWN 4	124	
	SLATE 5	53			SLATE 5	125	
	WHITE 6	54			WHITE 6	126	
	RED 7	55			RED 7	127	
	BLACK 8	56			BLACK 8	128	
	YELLOW 9	57			YELLOW 9	129	
	VIOLET 1	58			VIOLET 10	130	
	ROSE 11	59			ROSE 11	131	
	AQUA 1	60			AQUA 12	132	
WHITE	BLUE 1	61		AQUA	BLUE 1	133	
	ORANGE 2	62			ORANGE 2	134	
	GREEN 3	63			GREEN 3	135	
	BROWN 4	64			BROWN 4	136	
	SLATE 5	65			SLATE 5	137	
	WHITE 6	66			WHITE 6	138	
	RED 7	67			RED 7	139	
	BLACK 8	68			BLACK 8	140	
	YELLOW 9	69			YELLOW 9	141	
	VIOLET 1	70			VIOLET 10	142	
	ROSE 11	71			ROSE 11	143	
	AQUA 1	72			AQUA 12	144	

DCF-03-002

DISTRIBUTION CABLE FIBER ASSIGNMENTS				ORIGINATION	CMV-03-06		
DISTRIBUTION CABLE DESIGNATION			DCF-03-008	DESTINATION	CMV-03-07		
BUFFER TUBE	FIBER	FIBER NO.	ASSIGNMENT	BUFFER TUBE	FIBER	FIBER NO.	ASSIGNMENT
BLUE	BLUE 1	1		RED	BLUE 1	73	LCF-03-006, FIBER 24
	ORANGE 2	2			ORANGE 2	74	LCF-03-006, FIBER 23
	GREEN 3	3			GREEN 3	75	LCF-03-006, FIBER 22
	BROWN 4	4			BROWN 4	76	LCF-03-006, FIBER 21
	SLATE 5	5			SLATE 5	77	LCF-03-006, FIBER 20
	WHITE 6	6			WHITE 6	78	LCF-03-006, FIBER 19
	RED 7	7			RED 7	79	LCF-03-006, FIBER 18
	BLACK 8	8			BLACK 8	80	LCF-03-006, FIBER 17
	YELLOW 9	9			YELLOW 9	81	LCF-03-006, FIBER 16
	VIOLET 1	10			VIOLET 10	82	LCF-03-006, FIBER 15
	ROSE 11	11			ROSE 11	83	LCF-03-006, FIBER 14
	AQUA 1	12			AQUA 12	84	LCF-03-006, FIBER 13
ORANGE	BLUE 1	13		BLACK	BLUE 1	85	
	ORANGE 2	14			ORANGE 2	86	
	GREEN 3	15			GREEN 3	87	
	BROWN 4	16			BROWN 4	88	
	SLATE 5	17			SLATE 5	89	
	WHITE 6	18			WHITE 6	90	
	RED 7	19			RED 7	91	
	BLACK 8	20			BLACK 8	92	
	YELLOW 9	21			YELLOW 9	93	
	VIOLET 1	22			VIOLET 10	94	
	ROSE 11	23			ROSE 11	95	
	AQUA 1	24			AQUA 12	96	
GREEN	BLUE 1	25		YELLOW	BLUE 1	97	
	ORANGE 2	26			ORANGE 2	98	
	GREEN 3	27			GREEN 3	99	
	BROWN 4	28			BROWN 4	100	
	SLATE 5	29			SLATE 5	101	
	WHITE 6	30			WHITE 6	102	
	RED 7	31			RED 7	103	
	BLACK 8	32			BLACK 8	104	
	YELLOW 9	33			YELLOW 9	105	
	VIOLET 1	34			VIOLET 10	106	
	ROSE 11	35			ROSE 11	107	
	AQUA 1	36			AQUA 12	108	
BROWN	BLUE 1	37		VIOLET	BLUE 1	109	
	ORANGE 2	38			ORANGE 2	110	
	GREEN 3	39			GREEN 3	111	
	BROWN 4	40			BROWN 4	112	
	SLATE 5	41			SLATE 5	113	
	WHITE 6	42			WHITE 6	114	
	RED 7	43			RED 7	115	
	BLACK 8	44			BLACK 8	116	
	YELLOW 9	45			YELLOW 9	117	
	VIOLET 1	46			VIOLET 10	118	
	ROSE 11	47			ROSE 11	119	
	AQUA 1	48			AQUA 12	120	
SLATE	BLUE 1	49		ROSE	BLUE 1	121	
	ORANGE 2	50			ORANGE 2	122	
	GREEN 3	51			GREEN 3	123	
	BROWN 4	52			BROWN 4	124	
	SLATE 5	53			SLATE 5	125	
	WHITE 6	54			WHITE 6	126	
	RED 7	55			RED 7	127	
	BLACK 8	56			BLACK 8	128	
	YELLOW 9	57			YELLOW 9	129	
	VIOLET 1	58			VIOLET 10	130	
	ROSE 11	59			ROSE 11	131	
	AQUA 1	60			AQUA 12	132	
WHITE	BLUE 1	61		AQUA	BLUE 1	133	
	ORANGE 2	62			ORANGE 2	134	
	GREEN 3	63			GREEN 3	135	
	BROWN 4	64			BROWN 4	136	
	SLATE 5	65			SLATE 5	137	
	WHITE 6	66			WHITE 6	138	
	RED 7	67			RED 7	139	
	BLACK 8	68			BLACK 8	140	
	YELLOW 9	69			YELLOW 9	141	
	VIOLET 1	70			VIOLET 10	142	
	ROSE 11	71			ROSE 11	143	
	AQUA 1	72			AQUA 12	144	

DCF-03-008

ITS–75

MODEL: Default
FILE NAME: G:\PROJECTS\6300-6399\6346\113\Drawings\CADMicro-SS4\CAD_Sheets\D162W38-ITS-DCFA-01-153-S4.dgn

STRAND ASSOCIATES®
1170 SOUTH HOUBOLT ROAD
JOLIET, ILLINOIS 60431
(815) 744-4200

USER NAME = jaker	DESIGNED - RRS	REVISED -	
	DRAWN - JLN	REVISED -	
PLOT SCALE = 100.0000 ' / in.	CHECKED - BMS	REVISED -	
PLOT DATE = 8/26/2024	DATE - 8/23/2024	REVISED -	

STATE OF ILLINOIS
DEPARTMENT OF TRANSPORTATION

DISTRIBUTION CABLE FIBER ASSIGNMENTS
CMV–03–06

SCALE: | SHEET OF SHEETS | STA. TO STA.

F.A.P. RTE.	SECTION	COUNTY	TOTAL SHEETS	SHEET NO.
342	(531) BR 23	COOK	1211	676
		CONTRACT NO. 62W38		
	ILLINOIS	FED. AID PROJECT		

DISTRIBUTION CABLE FIBER ASSIGNMENTS				ORIGINATION	CMV-03-07		
DISTRIBUTION CABLE DESIGNATION			DCF-03-008	DESTINATION	CMV-03-03		
BUFFER TUBE	FIBER	FIBER NO.	ASSIGNMENT	BUFFER TUBE	FIBER	FIBER NO.	ASSIGNMENT
BLUE	BLUE 1	1		RED	BLUE 1	73	
	ORANGE 2	2			ORANGE 2	74	
	GREEN 3	3			GREEN 3	75	
	BROWN 4	4			BROWN 4	76	
	SLATE 5	5			SLATE 5	77	
	WHITE 6	6			WHITE 6	78	
	RED 7	7			RED 7	79	
	BLACK 8	8			BLACK 8	80	
	YELLOW 9	9			YELLOW 9	81	
	VIOLET 10	10			VIOLET 10	82	
	ROSE 11	11			ROSE 11	83	
	AQUA 12	12			AQUA 12	84	
ORANGE	BLUE 1	13		BLACK	BLUE 1	85	
	ORANGE 2	14			ORANGE 2	86	
	GREEN 3	15			GREEN 3	87	
	BROWN 4	16			BROWN 4	88	
	SLATE 5	17			SLATE 5	89	
	WHITE 6	18			WHITE 6	90	
	RED 7	19			RED 7	91	
	BLACK 8	20			BLACK 8	92	
	YELLOW 9	21			YELLOW 9	93	
	VIOLET 10	22			VIOLET 10	94	
	ROSE 11	23			ROSE 11	95	
	AQUA 12	24			AQUA 12	96	
GREEN	BLUE 1	25		YELLOW	BLUE 1	97	
	ORANGE 2	26			ORANGE 2	98	
	GREEN 3	27			GREEN 3	99	
	BROWN 4	28			BROWN 4	100	
	SLATE 5	29			SLATE 5	101	
	WHITE 6	30			WHITE 6	102	
	RED 7	31			RED 7	103	
	BLACK 8	32			BLACK 8	104	
	YELLOW 9	33	LCF-03-002, FIBER 1		YELLOW 9	105	
	VIOLET 10	34	LCF-03-002, FIBER 2		VIOLET 10	106	
	ROSE 11	35			ROSE 11	107	
	AQUA 12	36			AQUA 12	108	
BROWN	BLUE 1	37		VIOLET	BLUE 1	109	
	ORANGE 2	38			ORANGE 2	110	
	GREEN 3	39			GREEN 3	111	
	BROWN 4	40			BROWN 4	112	
	SLATE 5	41			SLATE 5	113	
	WHITE 6	42			WHITE 6	114	
	RED 7	43			RED 7	115	
	BLACK 8	44			BLACK 8	116	
	YELLOW 9	45			YELLOW 9	117	
	VIOLET 10	46			VIOLET 10	118	
	ROSE 11	47			ROSE 11	119	
	AQUA 12	48			AQUA 12	120	
SLATE	BLUE 1	49		ROSE	BLUE 1	121	
	ORANGE 2	50			ORANGE 2	122	
	GREEN 3	51			GREEN 3	123	
	BROWN 4	52			BROWN 4	124	
	SLATE 5	53			SLATE 5	125	
	WHITE 6	54			WHITE 6	126	
	RED 7	55			RED 7	127	
	BLACK 8	56			BLACK 8	128	
	YELLOW 9	57			YELLOW 9	129	
	VIOLET 10	58			VIOLET 10	130	
	ROSE 11	59			ROSE 11	131	
	AQUA 12	60			AQUA 12	132	
WHITE	BLUE 1	61		AQUA	BLUE 1	133	
	ORANGE 2	62			ORANGE 2	134	
	GREEN 3	63			GREEN 3	135	
	BROWN 4	64			BROWN 4	136	
	SLATE 5	65			SLATE 5	137	
	WHITE 6	66			WHITE 6	138	
	RED 7	67			RED 7	139	
	BLACK 8	68			BLACK 8	140	
	YELLOW 9	69			YELLOW 9	141	
	VIOLET 10	70			VIOLET 10	142	
	ROSE 11	71			ROSE 11	143	
	AQUA 12	72			AQUA 12	144	

DCF-03-008

DISTRIBUTION CABLE FIBER ASSIGNMENTS				ORIGINATION	CMV-03-07		
DISTRIBUTION CABLE DESIGNATION			DCF-03-003	DESTINATION	CMV-03-09		
BUFFER TUBE	FIBER	FIBER NO.	ASSIGNMENT	BUFFER TUBE	FIBER	FIBER NO.	ASSIGNMENT
BLUE	BLUE 1	1		RED	BLUE 1	73	
	ORANGE 2	2			ORANGE 2	74	
	GREEN 3	3			GREEN 3	75	
	BROWN 4	4			BROWN 4	76	
	SLATE 5	5			SLATE 5	77	
	WHITE 6	6			WHITE 6	78	
	RED 7	7			RED 7	79	
	BLACK 8	8			BLACK 8	80	
	YELLOW 9	9			YELLOW 9	81	
	VIOLET 10	10			VIOLET 10	82	
	ROSE 11	11			ROSE 11	83	
	AQUA 12	12			AQUA 12	84	
ORANGE	BLUE 1	13		BLACK	BLUE 1	85	
	ORANGE 2	14			ORANGE 2	86	
	GREEN 3	15			GREEN 3	87	
	BROWN 4	16			BROWN 4	88	
	SLATE 5	17			SLATE 5	89	
	WHITE 6	18			WHITE 6	90	
	RED 7	19			RED 7	91	
	BLACK 8	20			BLACK 8	92	
	YELLOW 9	21			YELLOW 9	93	
	VIOLET 10	22			VIOLET 10	94	
	ROSE 11	23			ROSE 11	95	
	AQUA 12	24			AQUA 12	96	
GREEN	BLUE 1	25		YELLOW	BLUE 1	97	
	ORANGE 2	26			ORANGE 2	98	
	GREEN 3	27			GREEN 3	99	
	BROWN 4	28			BROWN 4	100	
	SLATE 5	29			SLATE 5	101	
	WHITE 6	30			WHITE 6	102	
	RED 7	31			RED 7	103	
	BLACK 8	32			BLACK 8	104	
	YELLOW 9	33	LCF-03-002, FIBER 3		YELLOW 9	105	
	VIOLET 10	34	LCF-03-002, FIBER 4		VIOLET 10	106	
	ROSE 11	35			ROSE 11	107	
	AQUA 12	36			AQUA 12	108	
BROWN	BLUE 1	37		VIOLET	BLUE 1	109	
	ORANGE 2	38			ORANGE 2	110	
	GREEN 3	39			GREEN 3	111	
	BROWN 4	40			BROWN 4	112	
	SLATE 5	41			SLATE 5	113	
	WHITE 6	42			WHITE 6	114	
	RED 7	43			RED 7	115	
	BLACK 8	44			BLACK 8	116	
	YELLOW 9	45			YELLOW 9	117	
	VIOLET 10	46			VIOLET 10	118	
	ROSE 11	47			ROSE 11	119	
	AQUA 12	48			AQUA 12	120	
SLATE	BLUE 1	49		ROSE	BLUE 1	121	
	ORANGE 2	50			ORANGE 2	122	
	GREEN 3	51			GREEN 3	123	
	BROWN 4	52			BROWN 4	124	
	SLATE 5	53			SLATE 5	125	
	WHITE 6	54			WHITE 6	126	
	RED 7	55			RED 7	127	
	BLACK 8	56			BLACK 8	128	
	YELLOW 9	57			YELLOW 9	129	
	VIOLET 10	58			VIOLET 10	130	
	ROSE 11	59			ROSE 11	131	
	AQUA 12	60			AQUA 12	132	
WHITE	BLUE 1	61		AQUA	BLUE 1	133	
	ORANGE 2	62			ORANGE 2	134	
	GREEN 3	63			GREEN 3	135	
	BROWN 4	64			BROWN 4	136	
	SLATE 5	65			SLATE 5	137	
	WHITE 6	66			WHITE 6	138	
	RED 7	67			RED 7	139	
	BLACK 8	68			BLACK 8	140	
	YELLOW 9	69			YELLOW 9	141	
	VIOLET 10	70			VIOLET 10	142	
	ROSE 11	71			ROSE 11	143	
	AQUA 12	72			AQUA 12	144	

DCF-03-003

STRAND ASSOCIATES®
1170 SOUTH HOUBOLT ROAD
JOLIET, ILLINOIS 60431
(815) 744-4200

USER NAME = jaker	DESIGNED - RRS	REVISED -
	DRAWN - JLN	REVISED -
PLOT SCALE = 100.0000 ' / in.	CHECKED - BMS	REVISED -
PLOT DATE = 8/26/2024	DATE - 8/23/2024	REVISED -

STATE OF ILLINOIS
DEPARTMENT OF TRANSPORTATION

DISTRIBUTION CABLE FIBER ASSIGNMENTS
CMV–03–07

SCALE: NTS | SHEET 1 OF 1 SHEETS | STA. TO STA.

F.A.P. RTE.	SECTION	COUNTY	TOTAL SHEETS	SHEET NO.
342	(531) BR 23	COOK	1211	677
		CONTRACT NO. 62W38		
		ILLINOIS	FED. AID PROJECT	

MODEL: Default
FILE NAME: S:\JOL\6300-6399\6346\113\Drawings\CAD\Micro-SS\CAD_Sheets\D-62W38-ph-ITS-DCFA-01-L13-SA.dgn

DISTRIBUTION CABLE FIBER ASSIGNMENTS				ORIGINATION	CMV-03-07		
DISTRIBUTION CABLE DESIGNATION			DCF-03-008	DESTINATION	CMV-03-03		
BUFFER TUBE	FIBER	FIBER NO.	ASSIGNMENT	BUFFER TUBE	FIBER	FIBER NO.	ASSIGNMENT
BLUE	BLUE 1	1		RED	BLUE 1	73	
	ORANGE 2	2			ORANGE 2	74	
	GREEN 3	3			GREEN 3	75	
	BROWN 4	4			BROWN 4	76	
	SLATE 5	5			SLATE 5	77	
	WHITE 6	6			WHITE 6	78	
	RED 7	7			RED 7	79	
	BLACK 8	8			BLACK 8	80	
	YELLOW 9	9			YELLOW 9	81	
	VIOLET 10	10			VIOLET 10	82	
	ROSE 11	11			ROSE 11	83	
	AQUA 12	12			AQUA 12	84	
ORANGE	BLUE 1	13		BLACK	BLUE 1	85	
	ORANGE 2	14			ORANGE 2	86	
	GREEN 3	15			GREEN 3	87	
	BROWN 4	16			BROWN 4	88	
	SLATE 5	17			SLATE 5	89	
	WHITE 6	18			WHITE 6	90	
	RED 7	19			RED 7	91	
	BLACK 8	20			BLACK 8	92	
	YELLOW 9	21			YELLOW 9	93	
	VIOLET 10	22			VIOLET 10	94	
	ROSE 11	23			ROSE 11	95	
	AQUA 12	24			AQUA 12	96	
GREEN	BLUE 1	25		YELLOW	BLUE 1	97	
	ORANGE 2	26			ORANGE 2	98	
	GREEN 3	27			GREEN 3	99	
	BROWN 4	28			BROWN 4	100	
	SLATE 5	29			SLATE 5	101	
	WHITE 6	30			WHITE 6	102	
	RED 7	31			RED 7	103	
	BLACK 8	32			BLACK 8	104	
	YELLOW 9	33	LCF-03-002, FIBER 1		YELLOW 9	105	
	VIOLET 10	34	LCF-03-002, FIBER 2		VIOLET 10	106	
	ROSE 11	35			ROSE 11	107	
	AQUA 12	36			AQUA 12	108	
BROWN	BLUE 1	37		VIOLET	BLUE 1	109	
	ORANGE 2	38			ORANGE 2	110	
	GREEN 3	39			GREEN 3	111	
	BROWN 4	40			BROWN 4	112	
	SLATE 5	41			SLATE 5	113	
	WHITE 6	42			WHITE 6	114	
	RED 7	43			RED 7	115	
	BLACK 8	44			BLACK 8	116	
	YELLOW 9	45			YELLOW 9	117	
	VIOLET 10	46			VIOLET 10	118	
	ROSE 11	47			ROSE 11	119	
	AQUA 12	48			AQUA 12	120	
SLATE	BLUE 1	49		ROSE	BLUE 1	121	
	ORANGE 2	50			ORANGE 2	122	
	GREEN 3	51			GREEN 3	123	
	BROWN 4	52			BROWN 4	124	
	SLATE 5	53			SLATE 5	125	
	WHITE 6	54			WHITE 6	126	
	RED 7	55			RED 7	127	
	BLACK 8	56			BLACK 8	128	
	YELLOW 9	57			YELLOW 9	129	
	VIOLET 10	58			VIOLET 10	130	
	ROSE 11	59			ROSE 11	131	
	AQUA 12	60			AQUA 12	132	
WHITE	BLUE 1	61		AQUA	BLUE 1	133	
	ORANGE 2	62			ORANGE 2	134	
	GREEN 3	63			GREEN 3	135	
	BROWN 4	64			BROWN 4	136	
	SLATE 5	65			SLATE 5	137	
	WHITE 6	66			WHITE 6	138	
	RED 7	67			RED 7	139	
	BLACK 8	68			BLACK 8	140	
	YELLOW 9	69			YELLOW 9	141	
	VIOLET 10	70			VIOLET 10	142	
	ROSE 11	71			ROSE 11	143	
	AQUA 12	72			AQUA 12	144	

DCF-03-008

DISTRIBUTION CABLE FIBER ASSIGNMENTS				ORIGINATION	CMV-03-07		
DISTRIBUTION CABLE DESIGNATION			DCF-03-003	DESTINATION	CMV-03-09		
BUFFER TUBE	FIBER	FIBER NO.	ASSIGNMENT	BUFFER TUBE	FIBER	FIBER NO.	ASSIGNMENT
BLUE	BLUE 1	1		RED	BLUE 1	73	
	ORANGE 2	2			ORANGE 2	74	
	GREEN 3	3			GREEN 3	75	
	BROWN 4	4			BROWN 4	76	
	SLATE 5	5			SLATE 5	77	
	WHITE 6	6			WHITE 6	78	
	RED 7	7			RED 7	79	
	BLACK 8	8			BLACK 8	80	
	YELLOW 9	9			YELLOW 9	81	
	VIOLET 10	10			VIOLET 10	82	
	ROSE 11	11			ROSE 11	83	
	AQUA 12	12			AQUA 12	84	
ORANGE	BLUE 1	13		BLACK	BLUE 1	85	
	ORANGE 2	14			ORANGE 2	86	
	GREEN 3	15			GREEN 3	87	
	BROWN 4	16			BROWN 4	88	
	SLATE 5	17			SLATE 5	89	
	WHITE 6	18			WHITE 6	90	
	RED 7	19			RED 7	91	
	BLACK 8	20			BLACK 8	92	
	YELLOW 9	21			YELLOW 9	93	
	VIOLET 10	22			VIOLET 10	94	
	ROSE 11	23			ROSE 11	95	
	AQUA 12	24			AQUA 12	96	
GREEN	BLUE 1	25		YELLOW	BLUE 1	97	
	ORANGE 2	26			ORANGE 2	98	
	GREEN 3	27			GREEN 3	99	
	BROWN 4	28			BROWN 4	100	
	SLATE 5	29			SLATE 5	101	
	WHITE 6	30			WHITE 6	102	
	RED 7	31			RED 7	103	
	BLACK 8	32			BLACK 8	104	
	YELLOW 9	33	LCF-03-002, FIBER 3		YELLOW 9	105	
	VIOLET 10	34	LCF-03-002, FIBER 4		VIOLET 10	106	
	ROSE 11	35			ROSE 11	107	
	AQUA 12	36			AQUA 12	108	
BROWN	BLUE 1	37		VIOLET	BLUE 1	109	
	ORANGE 2	38			ORANGE 2	110	
	GREEN 3	39			GREEN 3	111	
	BROWN 4	40			BROWN 4	112	
	SLATE 5	41			SLATE 5	113	
	WHITE 6	42			WHITE 6	114	
	RED 7	43			RED 7	115	
	BLACK 8	44			BLACK 8	116	
	YELLOW 9	45			YELLOW 9	117	
	VIOLET 10	46			VIOLET 10	118	
	ROSE 11	47			ROSE 11	119	
	AQUA 12	48			AQUA 12	120	
SLATE	BLUE 1	49		ROSE	BLUE 1	121	
	ORANGE 2	50			ORANGE 2	122	
	GREEN 3	51			GREEN 3	123	
	BROWN 4	52			BROWN 4	124	
	SLATE 5	53			SLATE 5	125	
	WHITE 6	54			WHITE 6	126	
	RED 7	55			RED 7	127	
	BLACK 8	56			BLACK 8	128	
	YELLOW 9	57			YELLOW 9	129	
	VIOLET 10	58			VIOLET 10	130	
	ROSE 11	59			ROSE 11	131	
	AQUA 12	60			AQUA 12	132	
WHITE	BLUE 1	61		AQUA	BLUE 1	133	
	ORANGE 2	62			ORANGE 2	134	
	GREEN 3	63			GREEN 3	135	
	BROWN 4	64			BROWN 4	136	
	SLATE 5	65			SLATE 5	137	
	WHITE 6	66			WHITE 6	138	
	RED 7	67			RED 7	139	
	BLACK 8	68			BLACK 8	140	
	YELLOW 9	69			YELLOW 9	141	
	VIOLET 10	70			VIOLET 10	142	
	ROSE 11	71			ROSE 11	143	
	AQUA 12	72			AQUA 12	144	

DCF-03-003

STRAND ASSOCIATES®
1170 SOUTH HOUBOLT ROAD
JOLIET, ILLINOIS 60431
(815) 744-4200

USER NAME = jaker	DESIGNED - RRS	REVISED -
	DRAWN - JLN	REVISED -
PLOT SCALE = 100.0000 ' / in.	CHECKED - BMS	REVISED -
PLOT DATE = 8/26/2024	DATE - 8/23/2024	REVISED -

STATE OF ILLINOIS
DEPARTMENT OF TRANSPORTATION

DISTRIBUTION CABLE FIBER ASSIGNMENTS
CMV–03–07

SCALE: NTS | SHEET 1 OF 1 SHEETS | STA. TO STA.

F.A.P. RTE.	SECTION	COUNTY	TOTAL SHEETS	SHEET NO.
342	(531) BR 23	COOK	1211	677
		CONTRACT NO. 62W38		
		ILLINOIS	FED. AID PROJECT	

MODEL: Default
FILE NAME: S:\IDOL\6300-6399\63461133\Drawings\CAD\Micro-SS4\CAD_Sheets\D-62W38-ph-ITS-DCFA-01-L33-SA.dgn

DISTRIBUTION CABLE FIBER ASSIGNMENTS				ORIGINATION	CMV-03-11		
DISTRIBUTION CABLE DESIGNATION			DCF-03-004	DESTINATION	CMV-03-09		
BUFFER TUBE	FIBER	FIBER NO.	ASSIGNMENT	BUFFER TUBE	FIBER	FIBER NO.	ASSIGNMENT
BLUE	BLUE 1	1		RED	BLUE 1	73	
	ORANGE 2	2			ORANGE 2	74	
	GREEN 3	3			GREEN 3	75	
	BROWN 4	4			BROWN 4	76	
	SLATE 5	5			SLATE 5	77	
	WHITE 6	6			WHITE 6	78	
	RED 7	7			RED 7	79	
	BLACK 8	8			BLACK 8	80	
	YELLOW 9	9			YELLOW 9	81	
	VIOLET 10	10			VIOLET 10	82	
	ROSE 11	11			ROSE 11	83	
	AQUA 12	12			AQUA 12	84	
ORANGE	BLUE 1	13		BLACK	BLUE 1	85	
	ORANGE 2	14			ORANGE 2	86	
	GREEN 3	15			GREEN 3	87	
	BROWN 4	16			BROWN 4	88	
	SLATE 5	17			SLATE 5	89	
	WHITE 6	18			WHITE 6	90	
	RED 7	19			RED 7	91	
	BLACK 8	20			BLACK 8	92	
	YELLOW 9	21			YELLOW 9	93	
	VIOLET 10	22			VIOLET 10	94	
	ROSE 11	23			ROSE 11	95	
	AQUA 12	24			AQUA 12	96	
GREEN	BLUE 1	25		YELLOW	BLUE 1	97	
	ORANGE 2	26			ORANGE 2	98	
	GREEN 3	27			GREEN 3	99	
	BROWN 4	28			BROWN 4	100	
	SLATE 5	29			SLATE 5	101	
	WHITE 6	30			WHITE 6	102	
	RED 7	31			RED 7	103	
	BLACK 8	32			BLACK 8	104	
	YELLOW 9	33			YELLOW 9	105	
	VIOLET 10	34			VIOLET 10	106	
	ROSE 11	35			ROSE 11	107	
	AQUA 12	36			AQUA 12	108	
BROWN	BLUE 1	37	LCF-03-003, FIBER 1	VIOLET	BLUE 1	109	
	ORANGE 2	38	LCF-03-003, FIBER 2		ORANGE 2	110	
	GREEN 3	39			GREEN 3	111	
	BROWN 4	40			BROWN 4	112	
	SLATE 5	41			SLATE 5	113	
	WHITE 6	42			WHITE 6	114	
	RED 7	43			RED 7	115	
	BLACK 8	44			BLACK 8	116	
	YELLOW 9	45			YELLOW 9	117	
	VIOLET 10	46			VIOLET 10	118	
	ROSE 11	47			ROSE 11	119	
	AQUA 12	48			AQUA 12	120	
SLATE	BLUE 1	49		ROSE	BLUE 1	121	
	ORANGE 2	50			ORANGE 2	122	
	GREEN 3	51			GREEN 3	123	
	BROWN 4	52			BROWN 4	124	
	SLATE 5	53			SLATE 5	125	
	WHITE 6	54			WHITE 6	126	
	RED 7	55			RED 7	127	
	BLACK 8	56			BLACK 8	128	
	YELLOW 9	57			YELLOW 9	129	
	VIOLET 10	58			VIOLET 10	130	
	ROSE 11	59			ROSE 11	131	
	AQUA 12	60			AQUA 12	132	
WHITE	BLUE 1	61		AQUA	BLUE 1	133	
	ORANGE 2	62			ORANGE 2	134	
	GREEN 3	63			GREEN 3	135	
	BROWN 4	64			BROWN 4	136	
	SLATE 5	65			SLATE 5	137	
	WHITE 6	66			WHITE 6	138	
	RED 7	67			RED 7	139	
	BLACK 8	68			BLACK 8	140	
	YELLOW 9	69			YELLOW 9	141	
	VIOLET 10	70			VIOLET 10	142	
	ROSE 11	71			ROSE 11	143	
	AQUA 12	72			AQUA 12	144	

DCF-03-004

DISTRIBUTION CABLE FIBER ASSIGNMENTS				ORIGINATION	CMV-03-11		
DISTRIBUTION CABLE DESIGNATION			DCF-03-005	DESTINATION	CMV-03-14		
BUFFER TUBE	FIBER	FIBER NO.	ASSIGNMENT	BUFFER TUBE	FIBER	FIBER NO.	ASSIGNMENT
BLUE	BLUE 1	1		RED	BLUE 1	73	
	ORANGE 2	2			ORANGE 2	74	
	GREEN 3	3			GREEN 3	75	
	BROWN 4	4			BROWN 4	76	
	SLATE 5	5			SLATE 5	77	
	WHITE 6	6			WHITE 6	78	
	RED 7	7			RED 7	79	
	BLACK 8	8			BLACK 8	80	
	YELLOW 9	9			YELLOW 9	81	
	VIOLET 10	10			VIOLET 10	82	
	ROSE 11	11			ROSE 11	83	
	AQUA 12	12			AQUA 12	84	
ORANGE	BLUE 1	13		BLACK	BLUE 1	85	
	ORANGE 2	14			ORANGE 2	86	
	GREEN 3	15			GREEN 3	87	
	BROWN 4	16			BROWN 4	88	
	SLATE 5	17			SLATE 5	89	
	WHITE 6	18			WHITE 6	90	
	RED 7	19			RED 7	91	
	BLACK 8	20			BLACK 8	92	
	YELLOW 9	21			YELLOW 9	93	
	VIOLET 10	22			VIOLET 10	94	
	ROSE 11	23			ROSE 11	95	
	AQUA 12	24			AQUA 12	96	
GREEN	BLUE 1	25		YELLOW	BLUE 1	97	
	ORANGE 2	26			ORANGE 2	98	
	GREEN 3	27			GREEN 3	99	
	BROWN 4	28			BROWN 4	100	
	SLATE 5	29			SLATE 5	101	
	WHITE 6	30			WHITE 6	102	
	RED 7	31			RED 7	103	
	BLACK 8	32			BLACK 8	104	
	YELLOW 9	33			YELLOW 9	105	
	VIOLET 10	34			VIOLET 10	106	
	ROSE 11	35			ROSE 11	107	
	AQUA 12	36			AQUA 12	108	
BROWN	BLUE 1	37	LCF-03-003, FIBER 4	VIOLET	BLUE 1	109	
	ORANGE 2	38	LCF-03-003, FIBER 3		ORANGE 2	110	
	GREEN 3	39			GREEN 3	111	
	BROWN 4	40			BROWN 4	112	
	SLATE 5	41			SLATE 5	113	
	WHITE 6	42			WHITE 6	114	
	RED 7	43			RED 7	115	
	BLACK 8	44			BLACK 8	116	
	YELLOW 9	45			YELLOW 9	117	
	VIOLET 10	46			VIOLET 10	118	
	ROSE 11	47			ROSE 11	119	
	AQUA 12	48			AQUA 12	120	
SLATE	BLUE 1	49		ROSE	BLUE 1	121	
	ORANGE 2	50			ORANGE 2	122	
	GREEN 3	51			GREEN 3	123	
	BROWN 4	52			BROWN 4	124	
	SLATE 5	53			SLATE 5	125	
	WHITE 6	54			WHITE 6	126	
	RED 7	55			RED 7	127	
	BLACK 8	56			BLACK 8	128	
	YELLOW 9	57			YELLOW 9	129	
	VIOLET 10	58			VIOLET 10	130	
	ROSE 11	59			ROSE 11	131	
	AQUA 12	60			AQUA 12	132	
WHITE	BLUE 1	61		AQUA	BLUE 1	133	
	ORANGE 2	62			ORANGE 2	134	
	GREEN 3	63			GREEN 3	135	
	BROWN 4	64			BROWN 4	136	
	SLATE 5	65			SLATE 5	137	
	WHITE 6	66			WHITE 6	138	
	RED 7	67			RED 7	139	
	BLACK 8	68			BLACK 8	140	
	YELLOW 9	69			YELLOW 9	141	
	VIOLET 10	70			VIOLET 10	142	
	ROSE 11	71			ROSE 11	143	
	AQUA 12	72			AQUA 12	144	

DCF-03-005

ITS–77

MODEL: Default
FILE NAME: S:\JOB\6300-6399\6346\113\Drawings\CAD\Micro-SS4\CAD_Sheets\D-62W38-ITS-DCFA-01-L53-S4.dgn

STRAND ASSOCIATES®
1170 SOUTH HOUBOLT ROAD
JOLIET, ILLINOIS 60431
(815) 744-4200

USER NAME = jaker	DESIGNED - RRS	REVISED -	
	DRAWN - JLN	REVISED -	
PLOT SCALE = 100.0000 ' / in.	CHECKED - BMS	REVISED -	
PLOT DATE = 8/26/2024	DATE - 8/23/2024	REVISED -	

STATE OF ILLINOIS
DEPARTMENT OF TRANSPORTATION

DISTRIBUTION CABLE FIBER ASSIGNMENTS
CMV–03–11

SCALE: NTS | SHEET 1 OF 1 SHEETS | STA. TO STA.

F.A.P. RTE.	SECTION	COUNTY	TOTAL SHEETS	SHEET NO.
342	(531) BR 23	COOK	1211	678
		CONTRACT NO. 62W38		
	ILLINOIS	FED. AID PROJECT		

DISTRIBUTION CABLE FIBER ASSIGNMENTS				ORIGINATION	CMV-03-14		
DISTRIBUTION CABLE DESIGNATION			DCF-03-005	DESTINATION	CMV-03-11		
BUFFER TUBE	FIBER	FIBER NO.	ASSIGNMENT	BUFFER TUBE	FIBER	FIBER NO.	ASSIGNMENT
BLUE	BLUE 1	1		RED	BLUE 1	73	
	ORANGE 2	2			ORANGE 2	74	
	GREEN 3	3			GREEN 3	75	
	BROWN 4	4			BROWN 4	76	
	SLATE 5	5			SLATE 5	77	
	WHITE 6	6			WHITE 6	78	
	RED 7	7			RED 7	79	
	BLACK 8	8			BLACK 8	80	
	YELLOW 9	9			YELLOW 9	81	
	VIOLET 10	10			VIOLET 10	82	
	ROSE 11	11			ROSE 11	83	
	AQUA 12	12			AQUA 12	84	
ORANGE	BLUE 1	13		BLACK	BLUE 1	85	
	ORANGE 2	14			ORANGE 2	86	
	GREEN 3	15			GREEN 3	87	
	BROWN 4	16			BROWN 4	88	
	SLATE 5	17			SLATE 5	89	
	WHITE 6	18			WHITE 6	90	
	RED 7	19			RED 7	91	
	BLACK 8	20			BLACK 8	92	
	YELLOW 9	21			YELLOW 9	93	
	VIOLET 10	22			VIOLET 10	94	
	ROSE 11	23			ROSE 11	95	
	AQUA 12	24			AQUA 12	96	
GREEN	BLUE 1	25		YELLOW	BLUE 1	97	
	ORANGE 2	26			ORANGE 2	98	
	GREEN 3	27			GREEN 3	99	
	BROWN 4	28			BROWN 4	100	
	SLATE 5	29			SLATE 5	101	
	WHITE 6	30			WHITE 6	102	
	RED 7	31			RED 7	103	
	BLACK 8	32			BLACK 8	104	
	YELLOW 9	33			YELLOW 9	105	
	VIOLET 10	34			VIOLET 10	106	
	ROSE 11	35			ROSE 11	107	
	AQUA 12	36			AQUA 12	108	
BROWN	BLUE 1	37		VIOLET	BLUE 1	109	
	ORANGE 2	38			ORANGE 2	110	
	GREEN 3	39	LCF-03-004, FIBER 1		GREEN 3	111	
	BROWN 4	40	LCF-03-004, FIBER 2		BROWN 4	112	
	SLATE 5	41			SLATE 5	113	
	WHITE 6	42			WHITE 6	114	
	RED 7	43			RED 7	115	
	BLACK 8	44			BLACK 8	116	
	YELLOW 9	45			YELLOW 9	117	
	VIOLET 10	46			VIOLET 10	118	
	ROSE 11	47			ROSE 11	119	
	AQUA 12	48			AQUA 12	120	
SLATE	BLUE 1	49		ROSE	BLUE 1	121	
	ORANGE 2	50			ORANGE 2	122	
	GREEN 3	51			GREEN 3	123	
	BROWN 4	52			BROWN 4	124	
	SLATE 5	53			SLATE 5	125	
	WHITE 6	54			WHITE 6	126	
	RED 7	55			RED 7	127	
	BLACK 8	56			BLACK 8	128	
	YELLOW 9	57			YELLOW 9	129	
	VIOLET 10	58			VIOLET 10	130	
	ROSE 11	59			ROSE 11	131	
	AQUA 12	60			AQUA 12	132	
WHITE	BLUE 1	61		AQUA	BLUE 1	133	
	ORANGE 2	62			ORANGE 2	134	
	GREEN 3	63			GREEN 3	135	
	BROWN 4	64			BROWN 4	136	
	SLATE 5	65			SLATE 5	137	
	WHITE 6	66			WHITE 6	138	
	RED 7	67			RED 7	139	
	BLACK 8	68			BLACK 8	140	
	YELLOW 9	69			YELLOW 9	141	
	VIOLET 10	70			VIOLET 10	142	
	ROSE 11	71			ROSE 11	143	
	AQUA 12	72			AQUA 12	144	

DCF-03-005

DISTRIBUTION CABLE FIBER ASSIGNMENTS				ORIGINATION	CMV-03-14		
DISTRIBUTION CABLE DESIGNATION			DCF-03-006	DESTINATION	CMV-03-18		
BUFFER TUBE	FIBER	FIBER NO.	ASSIGNMENT	BUFFER TUBE	FIBER	FIBER NO.	ASSIGNMENT
BLUE	BLUE 1	1		RED	BLUE 1	73	
	ORANGE 2	2			ORANGE 2	74	
	GREEN 3	3			GREEN 3	75	
	BROWN 4	4			BROWN 4	76	
	SLATE 5	5			SLATE 5	77	
	WHITE 6	6			WHITE 6	78	
	RED 7	7			RED 7	79	
	BLACK 8	8			BLACK 8	80	
	YELLOW 9	9			YELLOW 9	81	
	VIOLET 10	10			VIOLET 10	82	
	ROSE 11	11			ROSE 11	83	
	AQUA 12	12			AQUA 12	84	
ORANGE	BLUE 1	13		BLACK	BLUE 1	85	
	ORANGE 2	14			ORANGE 2	86	
	GREEN 3	15			GREEN 3	87	
	BROWN 4	16			BROWN 4	88	
	SLATE 5	17			SLATE 5	89	
	WHITE 6	18			WHITE 6	90	
	RED 7	19			RED 7	91	
	BLACK 8	20			BLACK 8	92	
	YELLOW 9	21			YELLOW 9	93	
	VIOLET 10	22			VIOLET 10	94	
	ROSE 11	23			ROSE 11	95	
	AQUA 12	24			AQUA 12	96	
GREEN	BLUE 1	25		YELLOW	BLUE 1	97	
	ORANGE 2	26			ORANGE 2	98	
	GREEN 3	27			GREEN 3	99	
	BROWN 4	28			BROWN 4	100	
	SLATE 5	29			SLATE 5	101	
	WHITE 6	30			WHITE 6	102	
	RED 7	31			RED 7	103	
	BLACK 8	32			BLACK 8	104	
	YELLOW 9	33			YELLOW 9	105	
	VIOLET 10	34			VIOLET 10	106	
	ROSE 11	35			ROSE 11	107	
	AQUA 12	36			AQUA 12	108	
BROWN	BLUE 1	37		VIOLET	BLUE 1	109	
	ORANGE 2	38			ORANGE 2	110	
	GREEN 3	39	LCF-03-004, FIBER 4		GREEN 3	111	
	BROWN 4	40	LCF-03-004, FIBER 3		BROWN 4	112	
	SLATE 5	41			SLATE 5	113	
	WHITE 6	42			WHITE 6	114	
	RED 7	43			RED 7	115	
	BLACK 8	44			BLACK 8	116	
	YELLOW 9	45			YELLOW 9	117	
	VIOLET 10	46			VIOLET 10	118	
	ROSE 11	47			ROSE 11	119	
	AQUA 12	48			AQUA 12	120	
SLATE	BLUE 1	49		ROSE	BLUE 1	121	
	ORANGE 2	50			ORANGE 2	122	
	GREEN 3	51			GREEN 3	123	
	BROWN 4	52			BROWN 4	124	
	SLATE 5	53			SLATE 5	125	
	WHITE 6	54			WHITE 6	126	
	RED 7	55			RED 7	127	
	BLACK 8	56			BLACK 8	128	
	YELLOW 9	57			YELLOW 9	129	
	VIOLET 10	58			VIOLET 10	130	
	ROSE 11	59			ROSE 11	131	
	AQUA 12	60			AQUA 12	132	
WHITE	BLUE 1	61		AQUA	BLUE 1	133	
	ORANGE 2	62			ORANGE 2	134	
	GREEN 3	63			GREEN 3	135	
	BROWN 4	64			BROWN 4	136	
	SLATE 5	65			SLATE 5	137	
	WHITE 6	66			WHITE 6	138	
	RED 7	67			RED 7	139	
	BLACK 8	68			BLACK 8	140	
	YELLOW 9	69			YELLOW 9	141	
	VIOLET 10	70			VIOLET 10	142	
	ROSE 11	71			ROSE 11	143	
	AQUA 12	72			AQUA 12	144	

DCF-03-006

STRAND ASSOCIATES®
1170 SOUTH HOUBOLT ROAD
JOLIET, ILLINOIS 60431
(815) 744-4200

USER NAME = jaker	DESIGNED - RRS	REVISED -	
	DRAWN - JLN	REVISED -	
PLOT SCALE = 100.0000 ' / in.	CHECKED - BMS	REVISED -	
PLOT DATE = 8/26/2024	DATE - 8/23/2024	REVISED -	

STATE OF ILLINOIS
DEPARTMENT OF TRANSPORTATION

DISTRIBUTION CABLE FIBER ASSIGNMENTS
CMV–03–14

SCALE: NTS | SHEET 1 OF 1 SHEETS | STA. TO STA.

F.A.P. RTE.	SECTION	COUNTY	TOTAL SHEETS	SHEET NO.
342	(531) BR 23	COOK	1211	679
		CONTRACT NO. 62W38		
	ILLINOIS	FED. AID PROJECT		

MODEL: Default
FILE NAME: S:\JOB\6300-6399\6346\113\Drawings\CAD\Micro-SS4\CAD_Sheets\D-62W38-ITS-DCFA-01-13-S4.dgn

DISTRIBUTION CABLE FIBER ASSIGNMENTS				ORIGINATION	CMV-03-18		
DISTRIBUTION CABLE DESIGNATION			DCF-03-006	DESTINATION	CMV-03-14		
BUFFER TUBE	FIBER	FIBER NO.	ASSIGNMENT	BUFFER TUBE	FIBER	FIBER NO.	ASSIGNMENT
BLUE	BLUE 1	1		RED	BLUE 1	73	
	ORANGE 2	2			ORANGE 2	74	
	GREEN 3	3			GREEN 3	75	
	BROWN 4	4			BROWN 4	76	
	SLATE 5	5			SLATE 5	77	
	WHITE 6	6			WHITE 6	78	
	RED 7	7			RED 7	79	
	BLACK 8	8			BLACK 8	80	
	YELLOW 9	9			YELLOW 9	81	
	VIOLET 10	10			VIOLET 10	82	
	ROSE 11	11			ROSE 11	83	
	AQUA 12	12			AQUA 12	84	
ORANGE	BLUE 1	13		BLACK	BLUE 1	85	
	ORANGE 2	14			ORANGE 2	86	
	GREEN 3	15			GREEN 3	87	
	BROWN 4	16			BROWN 4	88	
	SLATE 5	17			SLATE 5	89	
	WHITE 6	18			WHITE 6	90	
	RED 7	19			RED 7	91	
	BLACK 8	20			BLACK 8	92	
	YELLOW 9	21			YELLOW 9	93	
	VIOLET 10	22			VIOLET 10	94	
	ROSE 11	23			ROSE 11	95	
	AQUA 12	24			AQUA 12	96	
GREEN	BLUE 1	25		YELLOW	BLUE 1	97	
	ORANGE 2	26			ORANGE 2	98	
	GREEN 3	27			GREEN 3	99	
	BROWN 4	28			BROWN 4	100	
	SLATE 5	29			SLATE 5	101	
	WHITE 6	30			WHITE 6	102	
	RED 7	31			RED 7	103	
	BLACK 8	32			BLACK 8	104	
	YELLOW 9	33			YELLOW 9	105	
	VIOLET 10	34			VIOLET 10	106	
	ROSE 11	35			ROSE 11	107	
	AQUA 12	36			AQUA 12	108	
BROWN	BLUE 1	37		VIOLET	BLUE 1	109	
	ORANGE 2	38			ORANGE 2	110	
	GREEN 3	39			GREEN 3	111	
	BROWN 4	40			BROWN 4	112	
	SLATE 5	41	LCF-03-005, FIBER 1		SLATE 5	113	
	WHITE 6	42	LCF-03-005, FIBER 2		WHITE 6	114	
	RED 7	43			RED 7	115	
	BLACK 8	44			BLACK 8	116	
	YELLOW 9	45			YELLOW 9	117	
	VIOLET 10	46			VIOLET 10	118	
	ROSE 11	47			ROSE 11	119	
	AQUA 12	48			AQUA 12	120	
SLATE	BLUE 1	49		ROSE	BLUE 1	121	
	ORANGE 2	50			ORANGE 2	122	
	GREEN 3	51			GREEN 3	123	
	BROWN 4	52			BROWN 4	124	
	SLATE 5	53			SLATE 5	125	
	WHITE 6	54			WHITE 6	126	
	RED 7	55			RED 7	127	
	BLACK 8	56			BLACK 8	128	
	YELLOW 9	57			YELLOW 9	129	
	VIOLET 10	58			VIOLET 10	130	
	ROSE 11	59			ROSE 11	131	
	AQUA 12	60			AQUA 12	132	
WHITE	BLUE 1	61		AQUA	BLUE 1	133	
	ORANGE 2	62			ORANGE 2	134	
	GREEN 3	63			GREEN 3	135	
	BROWN 4	64			BROWN 4	136	
	SLATE 5	65			SLATE 5	137	
	WHITE 6	66			WHITE 6	138	
	RED 7	67			RED 7	139	
	BLACK 8	68			BLACK 8	140	
	YELLOW 9	69			YELLOW 9	141	
	VIOLET 10	70			VIOLET 10	142	
	ROSE 11	71			ROSE 11	143	
	AQUA 12	72			AQUA 12	144	

DCF-03-006

DISTRIBUTION CABLE FIBER ASSIGNMENTS				ORIGINATION	CMV-03-18		
DISTRIBUTION CABLE DESIGNATION			DCF-03-007	DESTINATION	CMV-03-19		
BUFFER TUBE	FIBER	FIBER NO.	ASSIGNMENT	BUFFER TUBE	FIBER	FIBER NO.	ASSIGNMENT
BLUE	BLUE 1	1		RED	BLUE 1	73	
	ORANGE 2	2			ORANGE 2	74	
	GREEN 3	3			GREEN 3	75	
	BROWN 4	4			BROWN 4	76	
	SLATE 5	5			SLATE 5	77	
	WHITE 6	6			WHITE 6	78	
	RED 7	7			RED 7	79	
	BLACK 8	8			BLACK 8	80	
	YELLOW 9	9			YELLOW 9	81	
	VIOLET 10	10			VIOLET 10	82	
	ROSE 11	11			ROSE 11	83	
	AQUA 12	12			AQUA 12	84	
ORANGE	BLUE 1	13		BLACK	BLUE 1	85	
	ORANGE 2	14			ORANGE 2	86	
	GREEN 3	15			GREEN 3	87	
	BROWN 4	16			BROWN 4	88	
	SLATE 5	17			SLATE 5	89	
	WHITE 6	18			WHITE 6	90	
	RED 7	19			RED 7	91	
	BLACK 8	20			BLACK 8	92	
	YELLOW 9	21			YELLOW 9	93	
	VIOLET 10	22			VIOLET 10	94	
	ROSE 11	23			ROSE 11	95	
	AQUA 12	24			AQUA 12	96	
GREEN	BLUE 1	25		YELLOW	BLUE 1	97	
	ORANGE 2	26			ORANGE 2	98	
	GREEN 3	27			GREEN 3	99	
	BROWN 4	28			BROWN 4	100	
	SLATE 5	29			SLATE 5	101	
	WHITE 6	30			WHITE 6	102	
	RED 7	31			RED 7	103	
	BLACK 8	32			BLACK 8	104	
	YELLOW 9	33			YELLOW 9	105	
	VIOLET 10	34			VIOLET 10	106	
	ROSE 11	35			ROSE 11	107	
	AQUA 12	36			AQUA 12	108	
BROWN	BLUE 1	37		VIOLET	BLUE 1	109	
	ORANGE 2	38			ORANGE 2	110	
	GREEN 3	39			GREEN 3	111	
	BROWN 4	40			BROWN 4	112	
	SLATE 5	41	LCF-03-005, FIBER 4		SLATE 5	113	
	WHITE 6	42	LCF-03-005, FIBER 3		WHITE 6	114	
	RED 7	43			RED 7	115	
	BLACK 8	44			BLACK 8	116	
	YELLOW 9	45			YELLOW 9	117	
	VIOLET 10	46			VIOLET 10	118	
	ROSE 11	47			ROSE 11	119	
	AQUA 12	48			AQUA 12	120	
SLATE	BLUE 1	49		ROSE	BLUE 1	121	
	ORANGE 2	50			ORANGE 2	122	
	GREEN 3	51			GREEN 3	123	
	BROWN 4	52			BROWN 4	124	
	SLATE 5	53			SLATE 5	125	
	WHITE 6	54			WHITE 6	126	
	RED 7	55			RED 7	127	
	BLACK 8	56			BLACK 8	128	
	YELLOW 9	57			YELLOW 9	129	
	VIOLET 10	58			VIOLET 10	130	
	ROSE 11	59			ROSE 11	131	
	AQUA 12	60			AQUA 12	132	
WHITE	BLUE 1	61		AQUA	BLUE 1	133	
	ORANGE 2	62			ORANGE 2	134	
	GREEN 3	63			GREEN 3	135	
	BROWN 4	64			BROWN 4	136	
	SLATE 5	65			SLATE 5	137	
	WHITE 6	66			WHITE 6	138	
	RED 7	67			RED 7	139	
	BLACK 8	68			BLACK 8	140	
	YELLOW 9	69			YELLOW 9	141	
	VIOLET 10	70			VIOLET 10	142	
	ROSE 11	71			ROSE 11	143	
	AQUA 12	72			AQUA 12	144	

DCF-03-007

ITS–79

MODEL: Default
FILE NAME: S:\JOL\6300-6399\6346\130\Drawings\CAD\Micro-SS\CAD_Sheets\D 62W38-ITS-DCFA-01-IL 53-SA.dgn

STRAND ASSOCIATES®
1170 SOUTH HOUBOLT ROAD
JOLIET, ILLINOIS 60431
(815) 744-4200

USER NAME = jaker	DESIGNED - RRS	REVISED -
	DRAWN - JLN	REVISED -
PLOT SCALE = 100.0000 ' / in.	CHECKED - BMS	REVISED -
PLOT DATE = 8/26/2024	DATE - 8/23/2024	REVISED -

STATE OF ILLINOIS
DEPARTMENT OF TRANSPORTATION

DISTRIBUTION CABLE FIBER ASSIGNMENTS
CMV–03–18

SCALE: NTS | SHEET 1 OF 1 SHEETS | STA. TO STA.

F.A.P. RTE.	SECTION	COUNTY	TOTAL SHEETS	SHEET NO.
342	(531) BR 23	COOK	1211	680
		CONTRACT NO. 62W38		
		ILLINOIS	FED. AID PROJECT	

12F SM CABLE LATERAL FROM CABINET-144 TO COMMUNICATIONS VAULT CMV-02-03

LATERAL CABLE FIBER ASSIGNMENTS		ORIGINATION	CABINET-144
LATERAL CABLE DESIGNATION	LCF-02-001	DESTINATION	CMV-02-03
FIBER NO.	CABINET CONNECTIONS	DISTRIBUTION CABLE CONNECTIONS	
1	ETHERNET SWITCH PORT 1	DCF-02-001 (), FIBER 1	
2	ETHERNET SWITCH PORT 1	DCF-02-001 (), FIBER 2	
3	ETHERNET SWITCH PORT 2	DCF-02-002 (), FIBER 2	
4	ETHERNET SWITCH PORT 2	DCF-02-002 (), FIBER 1	
5			
6			
7			
8			
9			
10			
11			
12			

12F SM CABLE LATERAL FROM CABINET-146 TO COMMUNICATIONS VAULT CMV-02-07

LATERAL CABLE FIBER ASSIGNMENTS		ORIGINATION	CABINET-146
LATERAL CABLE DESIGNATION	LCF-02-002	DESTINATION	CMV-02-07
FIBER NO.	CABINET CONNECTIONS	DISTRIBUTION CABLE CONNECTIONS	
1	ETHERNET SWITCH PORT 1	DCF-02-002 (), FIBER 3	
2	ETHERNET SWITCH PORT 1	DCF-02-002 (), FIBER 4	
3	ETHERNET SWITCH PORT 2	DCF-02-003 (), FIBER 4	
4	ETHERNET SWITCH PORT 2	DCF-02-003 (), FIBER 3	
5			
6			
7			
8			
9			
10			
11			
12			

ITS–80

MODEL: Default
FILE NAME: \\60\Projects\22145\04_CADD\CADD_Sheets\Contract 3\D1620V38-idot-pht-ft-x17.dgn

SINGH + ASSOCIATES, INC.
CONSULTING ENGINEERS

USER NAME = mgonzalez	DESIGNED - SG	REVISED -
	DRAWN VN	REVISED -
PLOT SCALE = 100.0000 ' / in.	CHECKED - RP	REVISED -
PLOT DATE = 8/23/2024	DATE - 07/24/2024	REVISED -

STATE OF ILLINOIS
DEPARTMENT OF TRANSPORTATION

FIBER ASSIGNMENTS
12 FIBER LATERAL CABLE

SCALE: N.T.S. | SHEET OF SHEETS | STA. TO STA.

F.A.P. RTE.	SECTION	COUNTY	TOTAL SHEETS	SHEET NO.
342	2018-100-BR	COOK	1211	681

CONTRACT NO. 62W38

ILLINOIS | FED. AID PROJECT

12F SM CABLE LATERAL FROM CABINET-135 TO COMMUNICATIONS VAULT CMV-02-10

LATERAL CABLE FIBER ASSIGNMENTS		ORIGINATION	CABINET-135
LATERAL CABLE DESIGNATION	LCF-02-003	DESTINATION	CMV-02-10
FIBER NO.	CABINET CONNECTIONS	DISTRIBUTION CABLE CONNECTIONS	
1	ETHERNET SWITCH PORT 1	DCF-02-003 (), FIBER 5	
2	ETHERNET SWITCH PORT 1	DCF-02-003 (), FIBER 6	
3	ETHERNET SWITCH PORT 2	DCF-02-004 (), FIBER 6	
4	ETHERNET SWITCH PORT 2	DCF-02-004 (), FIBER 5	
5			
6			
7			
8			
9			
10			
11			
12			

ITS–81

MODEL: Default
FILE NAME: \\sgi\Projects\22145\04_CADD\CADD_Sheets\Contract 3\D1620V38-idot-pht-ft-x18.dgn

SINGH + ASSOCIATES, INC.
CONSULTING ENGINEERS

USER NAME = mgonzalez	DESIGNED - SG	REVISED -
	DRAWN VN	REVISED -
PLOT SCALE = 100.0000 ' / in.	CHECKED - RP	REVISED -
PLOT DATE = 8/23/2024	DATE - 07/24/2024	REVISED -

STATE OF ILLINOIS
DEPARTMENT OF TRANSPORTATION

FIBER ASSIGNMENTS
12 FIBER LATERAL CABLE

SCALE: N.T.S. | SHEET OF SHEETS | STA. TO STA.

F.A.P. RTE.	SECTION	COUNTY	TOTAL SHEETS	SHEET NO.
342	2018-100-BR	COOK	1211	682
		CONTRACT NO. 62W38		
		ILLINOIS	FED. AID PROJECT	

12F SM CABLE LATERAL FROM CAB-148 TO COMMUNICATIONS VAULT CMV-03-03

LATERAL CABLE FIBER ASSIGNMENTS		ORIGINATION	CAB-148
LATERAL CABLE DESIGNATION	LCF-03-001	DESTINATION	CMV-03-03
FIBER NO.	CABINET CONNECTIONS	DISTRIBUTION CABLE CONNECTIONS	
1	ETHERNET SWITCH PORT 1	DCF-03-001 (), FIBER 31	
2	ETHERNET SWITCH PORT 1	DCF-03-001 (), FIBER 32	
3	ETHERNET SWITCH PORT 2	DCF-03-002 (), FIBER 32	
4	ETHERNET SWITCH PORT 2	DCF-03-002 (), FIBER 32	
5			
6			
7			
8			
9			
10			
11			
12			

24F SM CABLE LATERAL FROM TRAFFIC SIGNAL CABINET TO COMMUNICATIONS VAULT CMV-03-06

LATERAL CABLE FIBER ASSIGNMENTS		ORIGINATION	TRAFFIC SIGNAL CABINET
LATERAL CABLE DESIGNATION	LCF-03-006	DESTINATION	CMV-03-06
FIBER NO.	CABINET CONNECTIONS	DISTRIBUTION CABLE CONNECTIONS	
1	ETHERNET SWITCH PORT 1 (US RTE 14 AND IL RTE 53 WEST RAMPS)	DCF-03-002 (), FIBER 73	
2	ETHERNET SWITCH PORT 1 (US RTE 14 AND IL RTE 53 WEST RAMPS)	DCF-03-002 (), FIBER 74	
3	ETHERNET SWITCH PORT 2 (US RTE 14 AND IL RTE 53 WEST RAMPS)	DCF-03-008 (), FIBER 74	
4	ETHERNET SWITCH PORT 2 (US RTE 14 AND IL RTE 53 WEST RAMPS)	DCF-03-008 (), FIBER 73	
5	ETHERNET SWITCH PORT 1 (US RTE 14 AND IL RTE 53 EAST RAMPS)	DCF-03-002 (), FIBER 75	
6	ETHERNET SWITCH PORT 1 (US RTE 14 AND IL RTE 53 EAST RAMPS)	DCF-03-002 (), FIBER 76	
7	ETHERNET SWITCH PORT 2 (US RTE 14 AND IL RTE 53 EAST RAMPS)	DCF-03-008 (), FIBER 76	
8	ETHERNET SWITCH PORT 2 (US RTE 14 AND IL RTE 53 EAST RAMPS)	DCF-03-008 (), FIBER 75	
9			
10			
11			
12			
13			
14			
15			
16			
17			
18			
19			
20			
21			
22			
23			
24			

STRAND ASSOCIATES®
1170 SOUTH HOUBOLT ROAD
JOLIET, ILLINOIS 60431
(815) 744-4200

USER NAME = jaker
PLOT SCALE = 100.0000 ' / in.
PLOT DATE = 8/26/2024

DESIGNED - RRS
DRAWN - JLN
CHECKED - BMS
DATE - 8/23/2024

REVISED -
REVISED -
REVISED -
REVISED -

STATE OF ILLINOIS
DEPARTMENT OF TRANSPORTATION

FIBER ASSIGNMENTS
12 FIBER LATERAL CABLE

SCALE: NTS | SHEET 1 OF 3 SHEETS | STA. TO STA.

F.A.P. RTE.	SECTION	COUNTY	TOTAL SHEETS	SHEET NO.
342	(531) BR 23	COOK	1211	683

CONTRACT NO. 62W38

ILLINOIS | FED. AID PROJECT

MODEL: Default
FILE NAME: S:\JOL\6300-6399\6346\13\Drawings\CAD\Micro-SS4\CAD_Sheets\D.62W38-sht-ITS-DEFAULT-53-SA1.dgn

12F SM CABLE LATERAL FROM CAB-150 TO COMMUNICATIONS VAULT CMV-03-07

LATERAL CABLE FIBER ASSIGNMENTS		ORIGINATION	CAB-150
LATERAL CABLE DESIGNATION	LCF-03-002	DESTINATION	CMV-03-07
FIBER NO.	CABINET CONNECTIONS	DISTRIBUTION CABLE CONNECTIONS	
1	ETHERNET SWITCH PORT 1	DCF-03-008 (), FIBER 33	
2	ETHERNET SWITCH PORT 1	DCF-03-008 (), FIBER 34	
3	ETHERNET SWITCH PORT 2	DCF-03-003 (), FIBER 34	
4	ETHERNET SWITCH PORT 2	DCF-03-003 (), FIBER 33	
5			
6			
7			
8			
9			
10			
11			
12			

12F SM CABLE LATERAL FROM CAB-152 TO COMMUNICATIONS VAULT CMV-03-11

LATERAL CABLE FIBER ASSIGNMENTS		ORIGINATION	CAB-152
LATERAL CABLE DESIGNATION	LCF-03-003	DESTINATION	CMV-03-11
FIBER NO.	CABINET CONNECTIONS	DISTRIBUTION CABLE CONNECTIONS	
1	ETHERNET SWITCH PORT 1	DCF-03-004 (), FIBER 37	
2	ETHERNET SWITCH PORT 1	DCF-03-004 (), FIBER 38	
3	ETHERNET SWITCH PORT 2	DCF-03-005 (), FIBER 38	
4	ETHERNET SWITCH PORT 2	DCF-03-005 (), FIBER 37	
5			
6			
7			
8			
9			
10			
11			
12			

12F SM CABLE LATERAL FROM CAB-137 TO COMMUNICATIONS VAULT CMV-03-14

LATERAL CABLE FIBER ASSIGNMENTS		ORIGINATION	CAB-137
LATERAL CABLE DESIGNATION	LCF-03-004	DESTINATION	CMV-03-14
FIBER NO.	CABINET CONNECTIONS	DISTRIBUTION CABLE CONNECTIONS	
1	ETHERNET SWITCH PORT 1	DCF-03-005 (), FIBER 39	
2	ETHERNET SWITCH PORT 1	DCF-03-005 (), FIBER 40	
3	ETHERNET SWITCH PORT 2	DCF-03-006 (), FIBER 40	
4	ETHERNET SWITCH PORT 2	DCF-03-006 (), FIBER 39	
5			
6			
7			
8			
9			
10			
11			
12			

12F SM CABLE LATERAL FROM CAB-154 TO COMMUNICATIONS VAULT CMV-03-18

LATERAL CABLE FIBER ASSIGNMENTS		ORIGINATION	CAB-154
LATERAL CABLE DESIGNATION	LCF-03-005	DESTINATION	CMV-03-18
FIBER NO.	CABINET CONNECTIONS	DISTRIBUTION CABLE CONNECTIONS	
1	ETHERNET SWITCH PORT 1	DCF-03-006 (), FIBER 41	
2	ETHERNET SWITCH PORT 1	DCF-03-006 (), FIBER 42	
3	ETHERNET SWITCH PORT 2	DCF-03-007 (), FIBER 42	
4	ETHERNET SWITCH PORT 2	DCF-03-007 (), FIBER 41	
5			
6			
7			
8			
9			
10			
11			
12			

STRAND ASSOCIATES®
1170 SOUTH HOUBOLT ROAD
JOLIET, ILLINOIS 60431
(815) 744-4200

USER NAME = jaker
PLOT SCALE = 100.0000 ' / in.
PLOT DATE = 8/26/2024
DESIGNED - RRS
DRAWN - JLN
CHECKED - BMS
DATE - 8/23/2024
REVISED -
REVISED -
REVISED -
REVISED -

STATE OF ILLINOIS
DEPARTMENT OF TRANSPORTATION

FIBER ASSIGNMENTS
12 FIBER LATERAL CABLE

SCALE: NTS | SHEET 3 OF 3 SHEETS | STA. TO STA.

F.A.P. RTE.	SECTION	COUNTY	TOTAL SHEETS	SHEET NO.
342	(531) BR 23	COOK	1211	685

CONTRACT NO. 62W38
ILLINOIS FED. AID PROJECT

MODEL: Default
FILE NAME: S:\JOL\6300-6399\6346\113\Drawings\CAD\Micro-SS4\CAD_Sheets\D 62W38-JH-ITS-DCF4-01-I_S3-S4.dgn

Benchmark: BM 35 Elevation 744.637. Cut cross on the Northeast corner of the concrete foundation for an above ground traffic pedestal (marked "146") located between the Southbound IL Route 53 lanes and the Southbound IL Route 53 entrance ramp. Pedestal is approximately 460' South of the Kirchoff Road bridge.

Existing Structure: Structure Numbers 016-0376 and 016-1121 (NB IL-53 and SB IL-53 respectively) were originally built in 1963 under section 531-1HB-8. The existing structures consist of a three-span hinged in span 1 and 3 continuous steel superstructure with a 7" reinforced concrete deck supported by a multi-column pier and stub abutments. The bridge measures 202'-7¼" back to back abutment along the local tangent with a skew of 42°42'58" ahead left. The bridge is measured 60'-9¼" out to out. In 1971 the deck was repaired and an overlay was placed. In 1981 the existing longitudinal joint was closed and the expansion joint was reconstructed. In 1991 the expansion joint and parapet were reconstructed, the deck was repaired, and an overlay was placed. In 2001 the expansion bearings were replaced. In 2010 the expansion joints were reconstructed, the deck and overlay were patched, the longitudinal deck joint was resealed, and repairs to the parapets and slope walls were performed. Emergency shoring was installed under each hinge location in 2019, excluding the fascia beams.

Traffic Control: Traffic is to be maintained utilizing staged construction.

Salvage: None

NATHAN D. RICK 081-005819 LICENSED STRUCTURAL ENGINEER OF ILLINOIS

Nathan D. Rick, S.E.
Licensed Structural Engineer
State of Illinois No. 081-007039
Registration Expires 11/30/2024

STA. 1206+52.34
REBUILT 202X BY
STATE OF ILLINOIS
F.A.P. RTE. 342 (IL-53)
SEC. (513) BR 23
LOADING HL-93
STR. NO. 016-0376

STA. 1206+52.34
REBUILT 202X BY
STATE OF ILLINOIS
F.A.P. RTE. 342 (IL-53)
SEC. (513) BR 23
LOADING HL-93
STR. NO. 016-1121

NAME PLATES

(See Std. 515001 and Note 3)

DESIGN SPECIFICATIONS

2002 AASHTO Standard Specifications for Highway Bridges, 17th Edition (Existing Construction)

2020 AASHTO LRFD Bridge Design Specifications, 9th Edition (New Construction)

2006 Seismic Retrofitting Manual for Highway Structures: Part 1 - Bridges (FHWA-HRT-06-032)

EXISTING CONSTRUCTION LOADING HS20-44

NEW CONSTRUCTION LOADING HL-93

Allow 25#/sq. ft. for future wearing surface.

SEISMIC DATA

Seismic Retrofit Category (SRC) = A
Seismic Performance Zone (SPZ) = 1
Design Spectral Acceleration at 1.0 sec. (SD1) = 0.059g
Design Spectral Acceleration at 0.2 sec. (SDS) = 0.108g
Soil Site Class = C

DESIGN STRESSES

FIELD UNITS

f'c = 4,000 psi (Superstructure)
f'c = 3,500 psi (Substructure)
fy = 60,000 psi (Reinforcement)
fy = 50,000 psi (M270 Grade 50)

FIELD UNITS (EXISTING CONSTRUCTION)

fc = 1,400 psi (Substructure)
fs = 20,000 psi (Reinforcement)

Notes:
1. Up to ¼" may be ground off the bridge deck and the bridge approach slabs.
2. All structural steel to be metallized.
3. Existing Name Plates shall be cleaned and relocated next to the new Name Plates. Cost included with Name Plates.

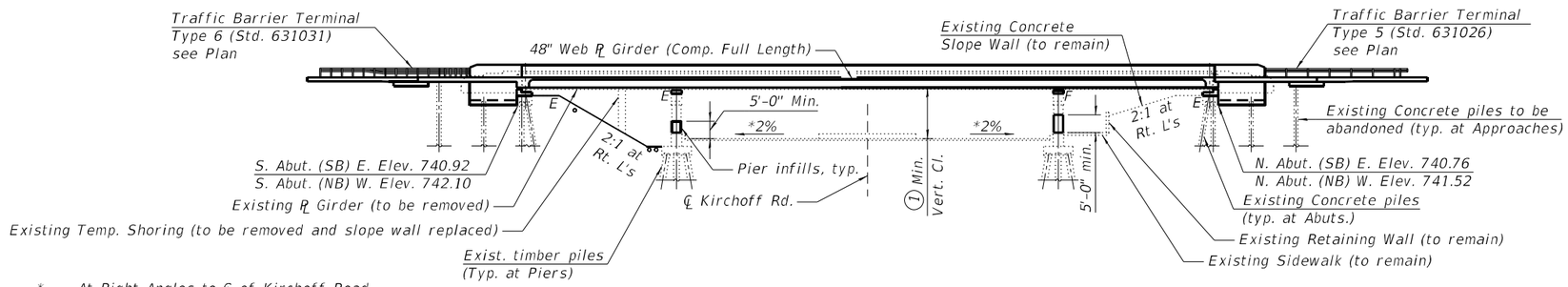

* At Right Angles to ℄ of Kirchoff Road.
** Measured at point of tangency.
① Min. Vert. Cl. 15'-6¼" for S.N. 016-0376
Min. Vert. Cl. 15'-2⅝" for S.N. 016-1121

ELEVATION

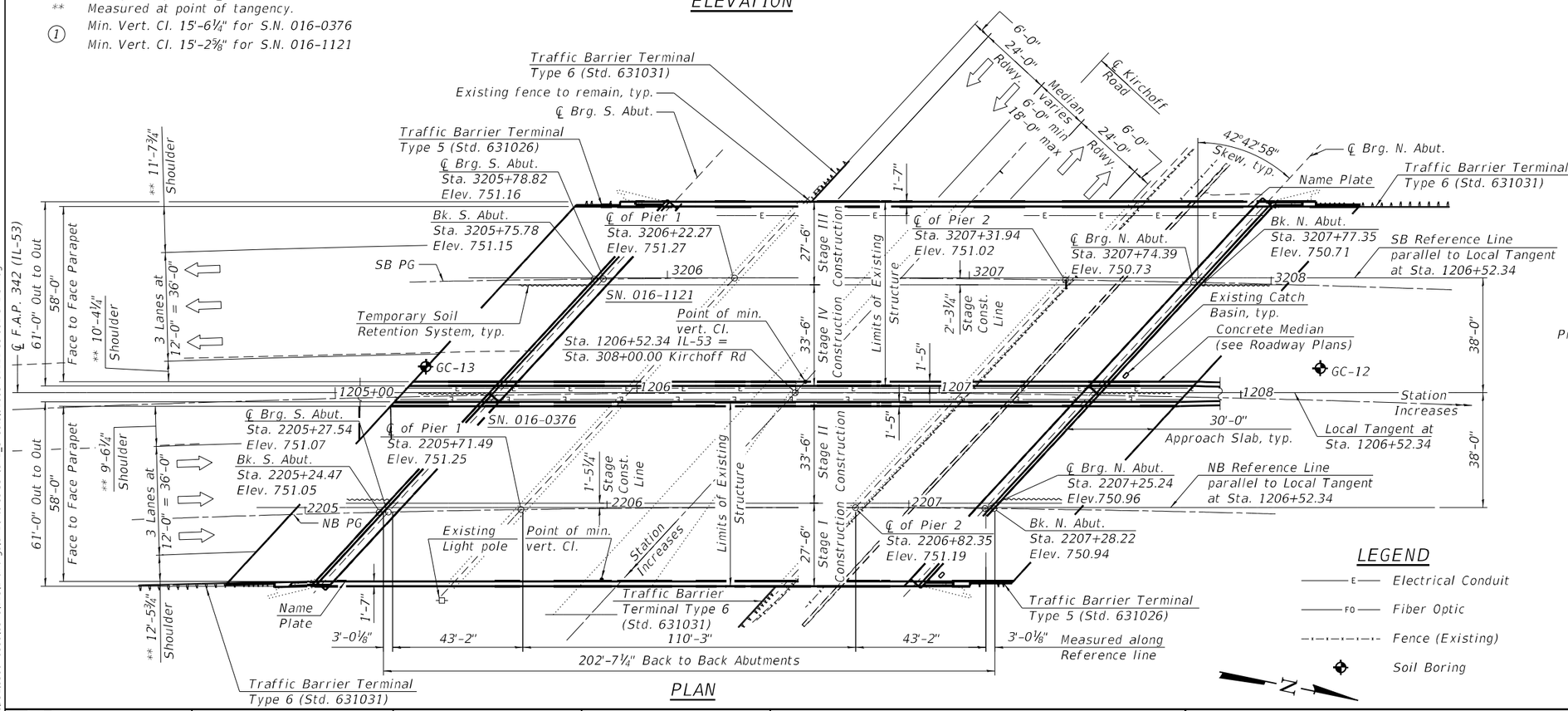

PLAN

LEGEND

E	Electrical Conduit
FO	Fiber Optic
	Fence (Existing)
	Soil Boring

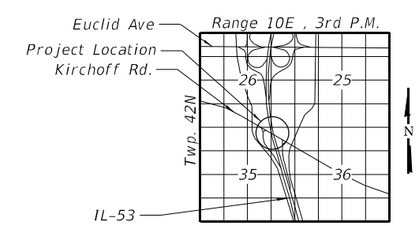

LOCATION SKETCH

GENERAL PLAN AND ELEVATION
F.A.P. 342 (IL-53) OVER KIRCHOFF ROAD
SECTION (531) BR 23
COOK COUNTY
STA. 1206+52.34
STRUCTURE NO. 016-1121 (SB)
STRUCTURE NO. 016-0376 (NB)

STRAND ASSOCIATES
1170 SOUTH HOUBOLT ROAD
JOLIET, ILLINOIS 60431
(815) 744-4200
IDFPR NO. 184-001273

USER NAME = codyh	DESIGNED - TJE	REVISED -	
	CHECKED - NDR	REVISED -	
PLOT SCALE = 0:2.0000 ':" / in.	DRAWN - CJH	REVISED -	
PLOT DATE = 9/20/2024	CHECKED - TJE	REVISED -	

STATE OF ILLINOIS
DEPARTMENT OF TRANSPORTATION

GENERAL PLAN AND ELEVATION
STRUCTURE NO. 016-0376 (NB) AND 016-1121 (SB)

SHEET 1 OF 66 SHEETS

F.A.P. RTE.	SECTION	COUNTY	TOTAL SHEETS	SHEET NO.
342	(531) BR 23	COOK	1211	686
		CONTRACT NO. 62W38		
		ILLINOIS	FED. AID PROJECT	

MODEL: Default
FILE NAME: S:\IDL\6300-6399\6346113\Drawings\CAD\Micro-SS4\CAD_Sheets\0160376112 1-C3-001-GPE-SAI.dgn
9/20/2024 3:11:01 PM

GENERAL NOTES

1. Fasteners shall be ASTM F 3125 Grade A325 Type 1, hot dip galvanized bolts in metallized areas. Bolts 7/8" diameter, holes 15/16" diameter, unless otherwise noted. See special provision for "Metalizing of Structural Steel".
2. Calculated weight of Structural Steel = 646,240 lbs (Grade 50)
   = 88,390 lbs (Grade 36)
3. All structural steel shall be AASHTO M270 Grade 50 or Grade 36 and shall be metallized. See Special Provision for "Metallizing of Structural Steel."
4. No field welding is permitted except as specified in the contract documents.
5. Reinforcement bars designated (E) shall be epoxy coated.
6. If the Contractor elects to use cantilever forming brackets on the exterior beams or girders, the brackets shall be placed at the same locations as required for the hardwood blocks in Article 503.06(b) of the Standard Specifications. If additional cantilever forming brackets are required, hardwood blocking shall be wedged between the exterior and first interiorbeam at each of these additional bracket locations.
7. The Concrete for bridge decks finished according to Article 503.16(a) of the Standard Specifications shall be placed and compacted parallel to the skew in uniform increments along centerline of bridge. The machince used for finishing shall be set parallel to the skew for striking off and screeding the concrete.
8. Bearing seat surfaces shall be constructed or adjusted to the designated elevations within a tolerance of 1/8" (0.01 ft.). Adjustment shall be made either by grinding the surface or by shimming the bearings.
9. Plan dimensions and details relative to the existing structure have been taken from existing plans are subject to nominal construction variations. The Contactor shall field verify existing dimensions and details affecting new construction and make necessary approved adjustments prior to construction or ordering of materials. Such variations shall not be cause for additional compensation for a change in scope of the work, however, the Contractor will be paid for the quantity actually furnished at the unit price bid for the work.
10. The existing structural steel coating contains lead. The Contractor shall take appropriate precautions to address the presence of lead on this project.
11. Concrete surfaces that are to recieve the textured form liner treatment shall also be tinted according to the special provision for "Concrete Color Additive". The revealed of Concrete Sealant (Special). All other surfaces to receive application of Protective Coat.
12. An existing debris shield is present full length of Span 2 and partially present in Spans 1 and 3. The staged removal of this debris shield is to be preformed concurrently with the staged removal of the superstructures. This work will not be individually measured for payment but is considered to be included with the cost of "Removal of Existing Superstructures No. 3 and No. 4."

INDEX OF SHEETS

TOTAL BILL OF MATERIAL

Item	Unit	Super	Sub	Total
Removal of Existing Superstructures No. 1	EACH	1		1
Removal of Existing Superstructures No. 2	EACH	1		1
Concrete Removal	CU YD		239.1	239.1
Slope Wall Removal	SQ YD		612	612
Protective Shield	SQ YD	2,678		2,678
Structure Excavation	CY YD		2,416	2,416
Concrete Structures	CU YD		453.7	453.7
Concrete Superstructure	CU YD	854.1		854.1
Protective Coat	SQ YD	3,809		3,809
Concrete Superstructure (Approach Slab)	CU YD	335.0		335.0
Furnishing and Erecting Structural Steel	L SUM	1		1
Stud Shear Connectors	EACH	28,569		28,569
Reinforcement Bars, Epoxy Coated	POUND	418,670	33,440	452,110
Bar Splicers	EACH	2,066		2,066
Mechanical Splicers	EACH	44	67	111
Slope Wall 4 Inch	SQ YD		612	612
Name Plates	EACH	2		2
Elastomeric Bearing Assembly, Type I	EACH	48		48
Anchor Bolts, 1"	EACH	96		96
Anchor Bolts, 1 1/2"	EACH	32		32
Temporary Soil Retention System	SQ FT		962	962
Granular Backfill for Structures	CY YD		2,018	2,018
Concrete Sealer	SQ FT		5,022	5,022
Geocomposite Wall Drain	SQ YD		713	713
Pipe Underdrains for Structures 4"	FOOT		431	431
Slope Wall Crack Sealing	FOOT		117	117
Concrete Color Additive	CY YD	74.8		74.8
Bridge Deck Grooving (Longitudinal)	SQ YD	3,224		3,224
Form Liner Textured Surface (Special)	SQ FT	1,625		1,625
Bar Terminators	EACH	872		872
Cleaning Bridge Seats	SQ FT		129	129
Structural Repair of Concrete (Depth Equal to or Less Than 5 Inches)	SQ FT		100	100
Structural Repair of Concrete (Depth Greater Than 5 Inches)	SQ FT		4	4
Diamond Grinding (Bridge Section)	SQ YD	3,121		3,121
Slope Wall Repair	SQ YD		18	18
Concrete Sealant (Special)	SQ YD	146		146

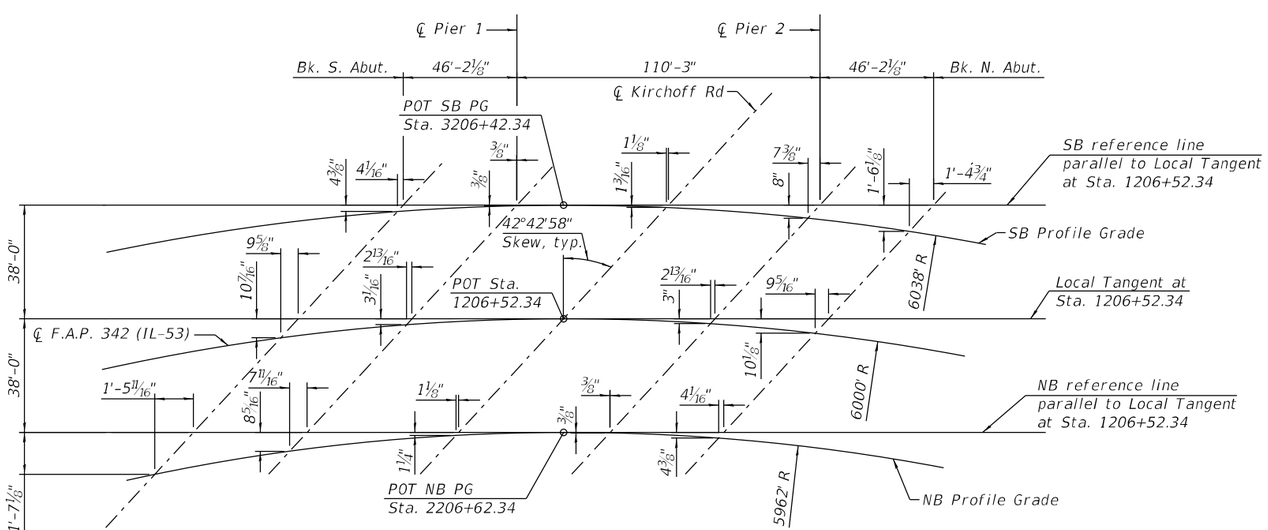

OFFSET SKETCH

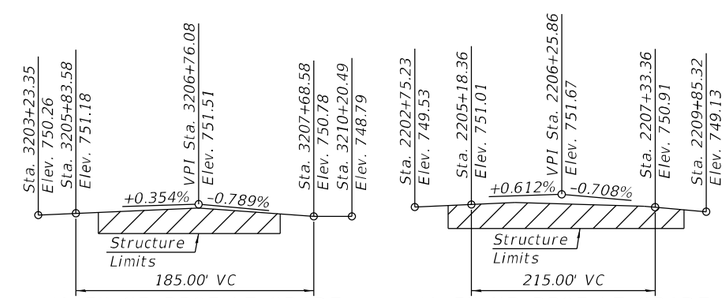

IL-53 SB PROFILE GRADE

IL-53 NB PROFILE GRADE

Note: The IL-53 Profile Grades show the final grade after grinding

CURVE DATA

SB PG (016-1121)
PI STA. = 3216+90.84
Δ = 28° 03' 08" (RT)
D = 0° 56' 56"
R = 6,038.00'
T = 1,508.36'
L = 2,956.21'
E = 185.55'
P.C. STA. = 3201+82.48
P.T. STA. = 3231+38.69

CENTERLINE IL-53
PI STA. = 1216+94.24
Δ = 28° 03' 07" (RT)
D = 0° 57' 18"
R = 6,000.00'
T = 1,498.86'
L = 2,937.60'
E = 184.38'
P.C. STA. = 1201+95.38
P.T. STA. = 1231+32.97

NB PG (016-0376)
PI STA. = 2216+97.63
Δ = 28° 03' 07" (RT)
D = 0° 57' 40"
R = 5,962.00'
T = 1,489.36'
L = 2,918.99'
E = 183.21'
P.C. STA. = 2202+08.27
P.T. STA. = 2231+27.26

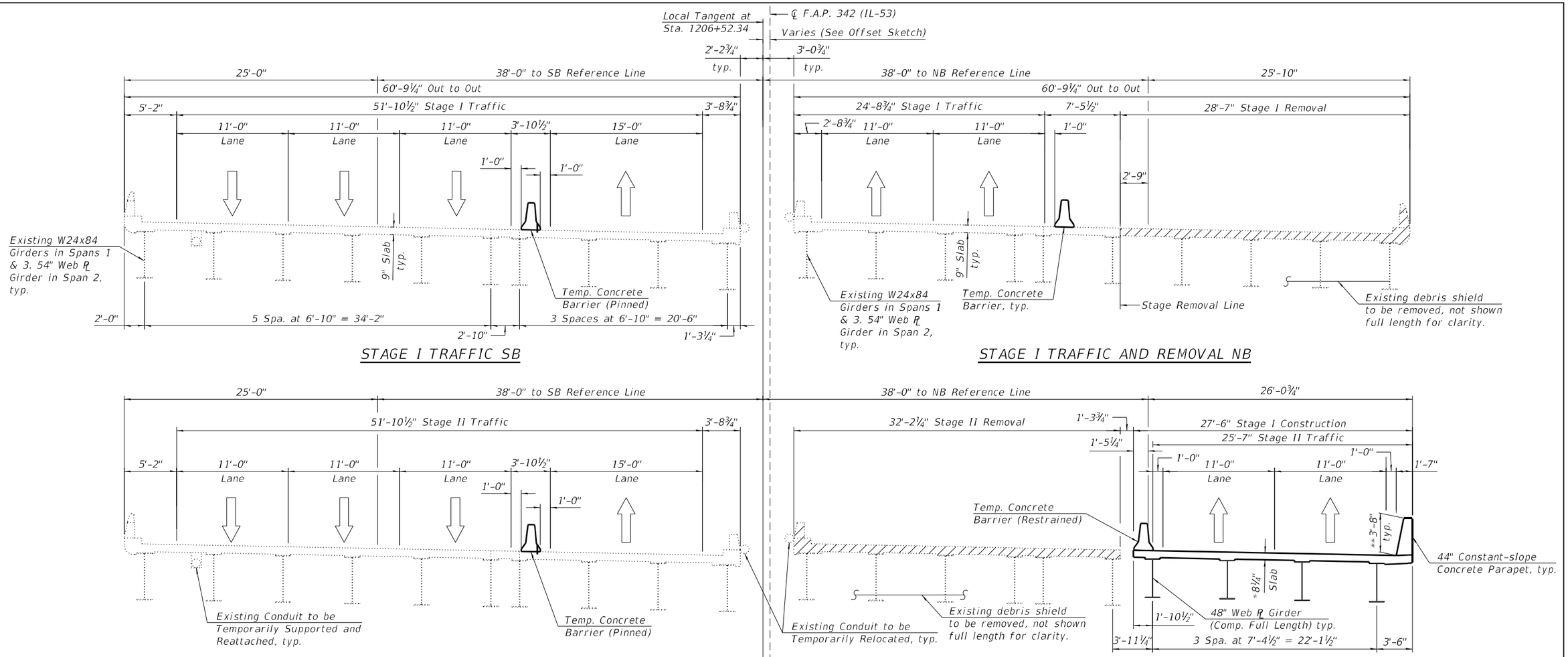

Notes:
1. All dimensions measured perpendicular to Reference Line unless otherwise noted.
2. For offset sketch, see Sheet 2 of 66.

* Prior to Grinding
** After Grinding

MODEL: Default
FILE NAME: S:\IDOL\6300-63996346\113\Drawings\CAD\Micro-SSA\CAD_Sheets\0160376112 1-C3-003-CS-SA1.dgn

STRAND ASSOCIATES®
1170 SOUTH HOUBOLT ROAD
JOLIET, ILLINOIS 60431
(815) 744-4200
IDFPR NO. 184-001273

USER NAME = codyh	DESIGNED - TJE	REVISED -	
	CHECKED - NDR	REVISED -	
PLOT SCALE = 0:2.0000 ':" / in.	DRAWN - CJH	REVISED -	
PLOT DATE = 9/20/2024	CHECKED - TJE	REVISED -	

STATE OF ILLINOIS
DEPARTMENT OF TRANSPORTATION

CONSTRUCTION STAGING (1 OF 2)
STRUCTURE NO. 016-0376 (NB) AND 016-1121 (SB)

SHEET 3 OF 66 SHEETS

F.A.P. RTE.	SECTION	COUNTY	TOTAL SHEETS	SHEET NO.
342	(531) BR 23	COOK	1211	688
		CONTRACT NO. 62W38		
		ILLINOIS	FED. AID PROJECT	

9/20/2024 3:11:04 PM

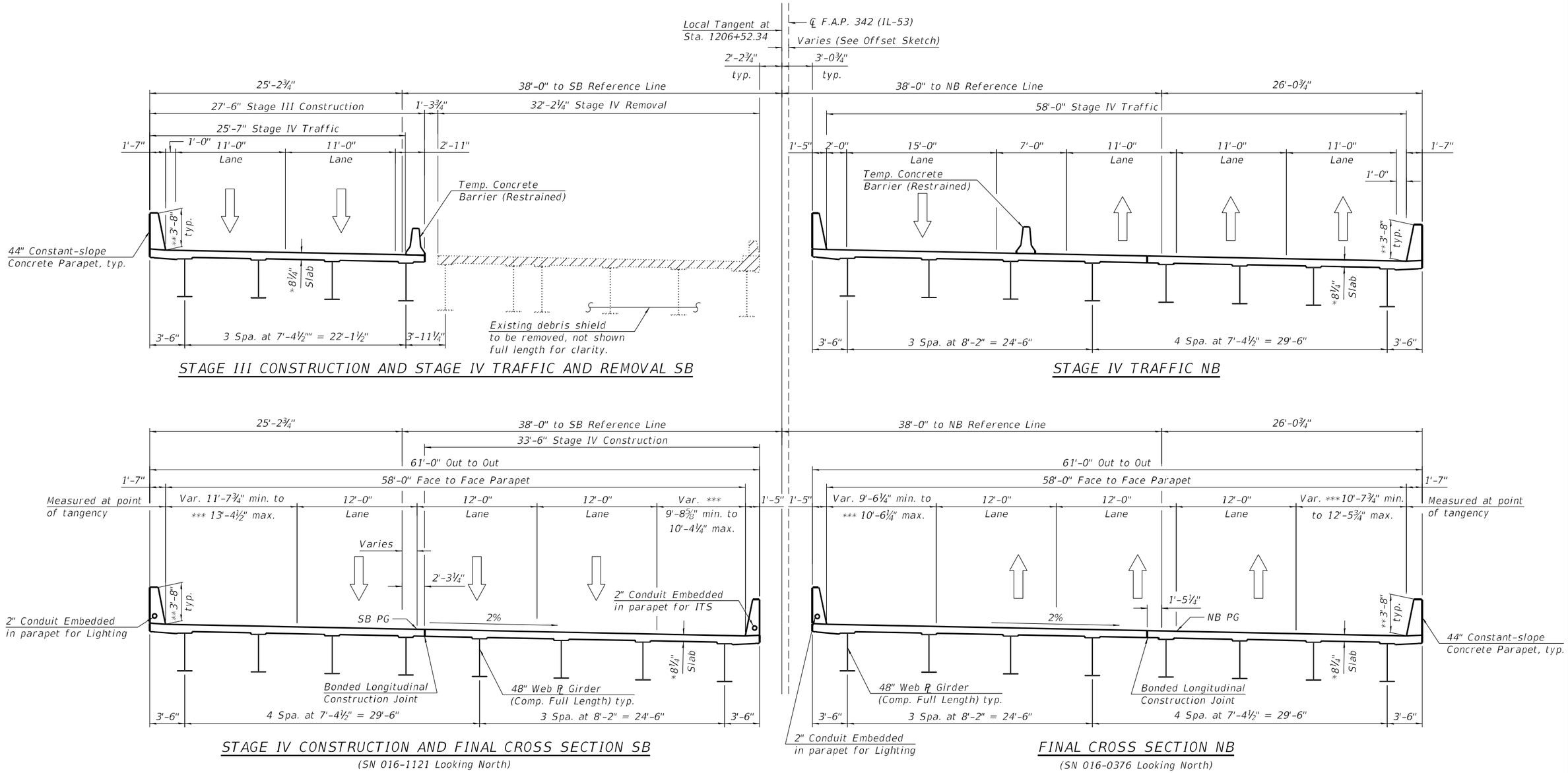

Notes:
1. All dimensions measured perpendicular to Reference Lines unless otherwise noted.
2. For offset sketch, see sheet 2 of 66.

* Prior to Grinding
** After Grinding
*** Face of curb or parapet at far end of approach slab

MODEL: Default
FILE NAME: S:\IOL\6300--6399\6346\113\Drawings\CAD\Micro-Station\CAD_Sheets\0160376121-C3-004-CS-SA1.dgn
9/20/2024 3:11:05 PM

STRAND ASSOCIATES
1170 SOUTH HOUBOLT ROAD
JOLIET, ILLINOIS 60431
(815) 744-4200
IDFPR NO. 184-001273

USER NAME = codyh	DESIGNED - TJE	REVISED -	
	CHECKED - NDR	REVISED -	
PLOT SCALE = 0:2.0000 ':" / in.	DRAWN - CJH	REVISED -	
PLOT DATE = 9/20/2024	CHECKED - TJE	REVISED -	

STATE OF ILLINOIS
DEPARTMENT OF TRANSPORTATION

CONSTRUCTION STAGING (2 OF 2)
STRUCTURE NO. 016-0376 (NB) AND 016-1121 (SB)

SHEET 4 OF 66 SHEETS

F.A.P. RTE.	SECTION	COUNTY	TOTAL SHEETS	SHEET NO.
342	(531) BR 23	COOK	1211	689
		CONTRACT NO. 62W38		
		ILLINOIS	FED. AID PROJECT	

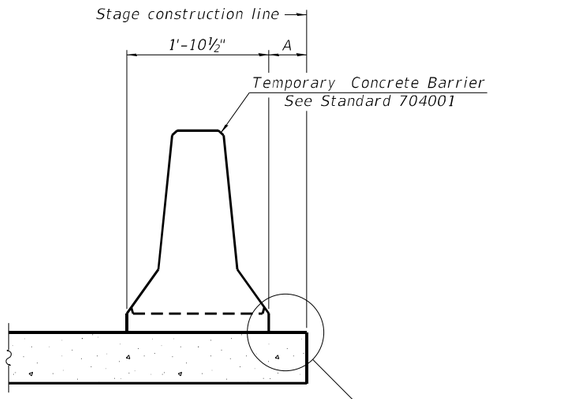

When "A" is 3'-1" or less, the temporary concrete barrier shall be restrained to the new slab according to Detail I, II or III. No restraint is required when "A" is greater than 3'-1".

NEW SLAB OR NEW DECK BEAM

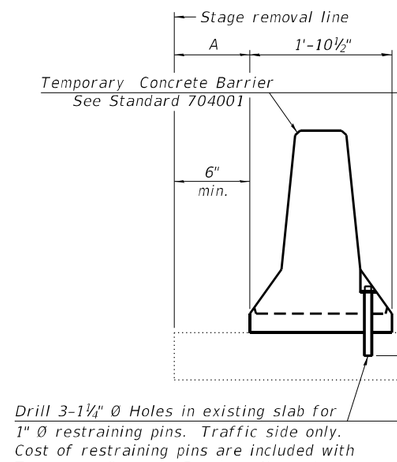

Drill 3-1¼" Ø Holes in existing slab for 1" Ø restraining pins. Traffic side only. Cost of restraining pins are included with Temporary Concrete Barrier. No restraint is required when "A" is greater than 3'-1".

EXISTING SLAB

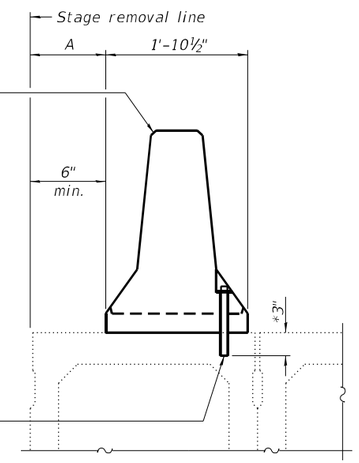

* When hot-mix asphalt wearing surface is present, embedment shall be 3" plus the wearing surface depth.

EXISTING DECK BEAM

SECTIONS THRU SLAB OR DECK BEAM

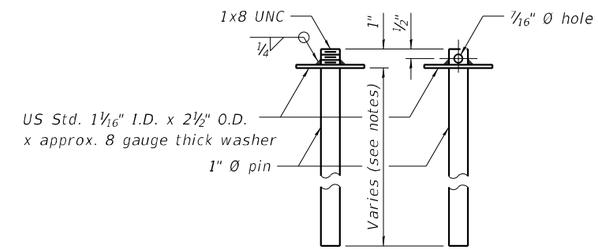

RESTRAINING PIN

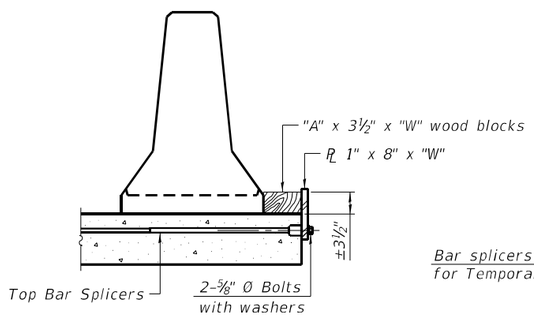

DETAIL I

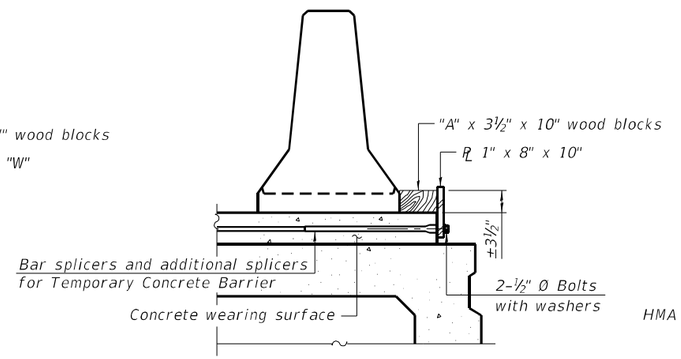

DETAIL II

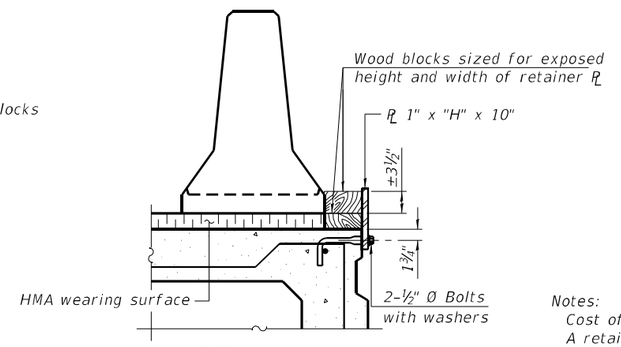

DETAIL III

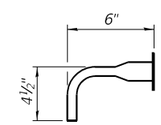

BAR SPLICER FOR #4 BAR - DETAIL III

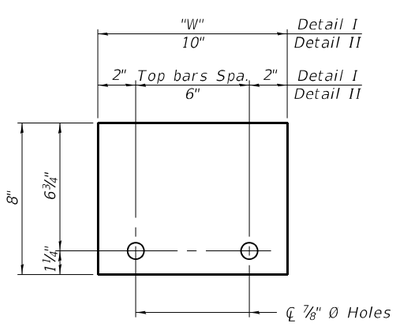

STEEL RETAINER PL 1" x 8" x "W"

(Detail I and II)

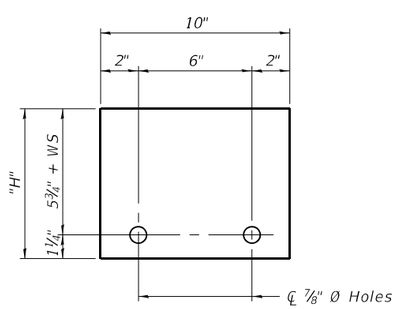

STEEL RETAINER PL 1" x "H" x 10"

(Detail III)

Notes:

Cost of retainer assembly is included with Temporary Concrete Barrier.

A retainer assembly shall be located at the approximate ℄ of each temporary concrete barrier.

The retainer plate shall not be removed until the concrete on the adjacent stage is ready to be poured. For Detail III applications the retainer plate shall not be removed until just prior to placing the adjacent beam.

When the 'A' dimension is less than 1½", the wood block shall be omitted and the barrier shall be placed in direct contact with the steel retainer plate. For deck beam applications the minimum required 'A' distance is 6" to accommodate the shear key clamping device.

Detail I - Installation for a new bridge deck or bridge slab.

Detail II - Installation for a new deck beam with an initial concrete wearing surface. Additional bar splicers shall be provided at 6'-0" centers and paired with the bar splicers of the concrete wearing surface reinforcement to accommodate the installation of the retainer assemblies. The cost of the additional bar splicers is included with the concrete wearing surface.

Detail III - Installation for a new deck beam with no initial wearing surface or with an initial hot-mix asphalt (HMA) wearing surface present. The deck beam directly beneath the temporary concrete barrier shall be fabricated with bar splicer inserts in the side of the beam, as detailed, to accommodate the installation of the retainer assemblies. A pair of bar splicers, 6" apart, shall be placed at 6'-0" centers along the length of the beam. The cost of the bar splicers is included with the deck beam.

RAILING CRITERIA

NCHRP 350 Test Level	3
Railing Weight (plf)	440

R-27

10-12-2021

STRAND ASSOCIATES®
1170 SOUTH HOUBOLT ROAD
JOLIET, ILLINOIS 60431
(815) 744-4200
IDFPR NO. 184-001273

USER NAME = codyh	DESIGNED - TJE	REVISED -	
	CHECKED - NDR	REVISED -	
PLOT SCALE = 0:2.0000 ':" / in.	DRAWN - CJH	REVISED -	
PLOT DATE = 9/20/2024	CHECKED - TJE	REVISED -	

STATE OF ILLINOIS
DEPARTMENT OF TRANSPORTATION

TEMPORARY CONCRETE BARRIER
STRUCTURE NO. 016-0376 (NB) AND 016-1121 (SB)

SHEET 5 OF 66 SHEETS

F.A.P. RTE.	SECTION	COUNTY	TOTAL SHEETS	SHEET NO.
342	(531) BR 23	COOK	1211	690
		CONTRACT NO. 62W38		
	ILLINOIS	FED. AID PROJECT		

MODEL: Default
FILE NAME: S:\OL6300-63996346113\Drawings\CAD\Micro-SSA\CAD_Sheets\0160376112 1-C3-005-TCB-SAI.dgn

9/20/2024 3:11:06 PM

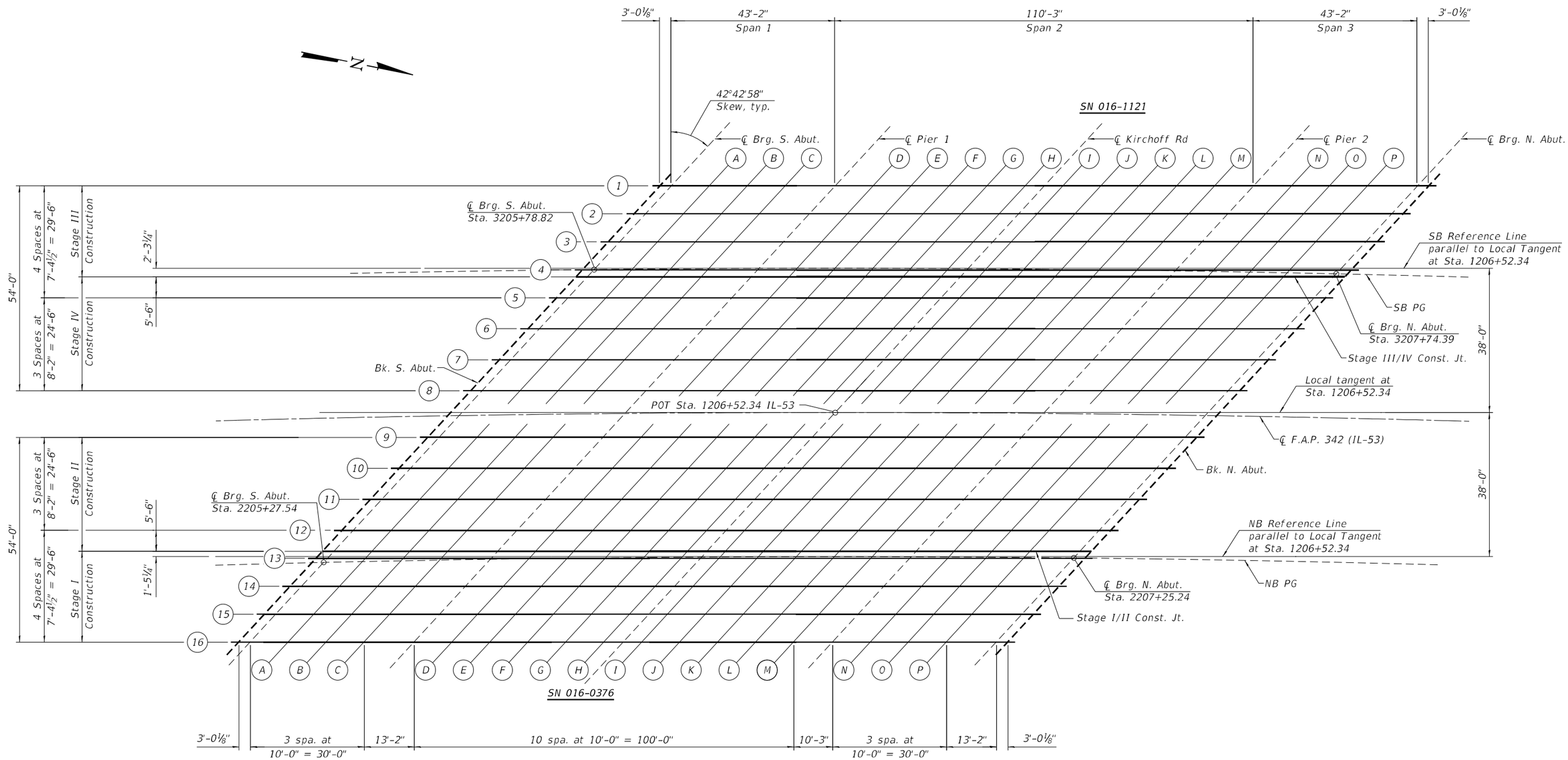

TOP OF DECK SLAB PLAN

Notes:
1. Work this sheet with sheets 7 thru 14 of 66.
2. For Offset Sketch, see sheet 2 of 66.

MODEL: Default
FILE NAME: S:\OL\6300--6399\6346\113\Drawings\CAD\Micros-SS4\CAD_Sheets\016037611 21-C3-006-TSEL-SAL.dgn

STRAND ASSOCIATES
1170 SOUTH HOUBOLT ROAD
JOLIET, ILLINOIS 60431
(815) 744-4200
IDFPR NO. 184-001273

USER NAME = codyh	DESIGNED - JAS	REVISED -	
	CHECKED - NDR	REVISED -	
PLOT SCALE = 0:2.0000 ':" / in.	DRAWN - CJH	REVISED -	
PLOT DATE = 9/20/2024	CHECKED - TJE	REVISED -	

STATE OF ILLINOIS
DEPARTMENT OF TRANSPORTATION

TOP OF DECK SLAB ELEVATION LAYOUT
STRUCTURE NO. 016-0376 (NB) AND 016-1121 (SB)

SHEET 6 OF 66 SHEETS

F.A.P. RTE.	SECTION	COUNTY	TOTAL SHEETS	SHEET NO.
342	(531) BR 23	COOK	1211	691
		CONTRACT NO. 62W38		
	ILLINOIS	FED. AID PROJECT		

9/20/2024 3:11:07 PM

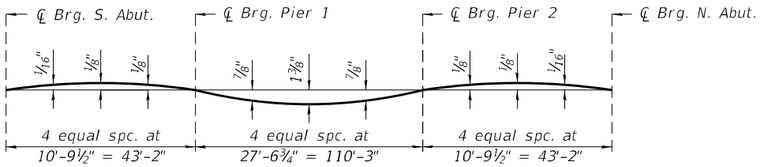

DEAD LOAD DEFLECTION DIAGRAM

(Includes weight of concrete only.)

Note:
The above deflections are not to be used in the field if the engineer is working from the grade elevations adjusted for dead load deflections and grinding as shown on Sheets 7-14.

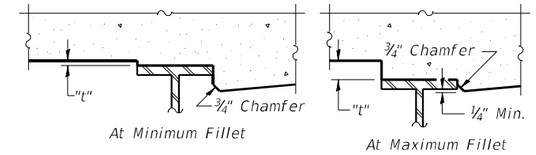

To determine "t": After all structural steel has been erected, elevations of the top flanges of the beams shall be taken at intervals shown on Sheet 6. These elevations subtracted from the "Theoretical Grade Elevations Adjusted for Dead Load Deflection and Grinding" shown Sheets 7-14, minus the initial slab thickness prior to grinding, equals the fillet heights "t" above top flange of beams.

The slab is to be ground after curing to achieve smoothness, but the slab is not to be ground to elevations below the "Theoretical Grade Elevations" shown on Sheets 7-14. For grinding the deck, see Special Provisions.

FILLET HEIGHTS

BEAM 1

Location	Station	Offset	Theoretical Grade Elevations	Theoretical Grade Elevations Adjusted for DL Deflection & Grinding
BK. S. ABUT.	3205+96.35	-21.90	751.66	751.68
CL BRG. S. ABUT.	3205+99.35	-21.88	751.66	751.69
A	3206+09.32	-21.82	751.69	751.70
B	3206+19.28	-21.77	751.70	751.71
C	3206+29.24	-21.74	751.71	751.72
CL BRG. PIER 1	3206+42.36	-21.73	751.71	751.74
D	3206+52.33	-21.74	751.71	751.75
E	3206+62.29	-21.76	751.70	751.76
F	3206+72.25	-21.80	751.69	751.77
G	3206+82.22	-21.86	751.66	751.78
H	3206+92.18	-21.94	751.64	751.76
I	3207+02.15	-22.03	751.60	751.73
J	3207+12.11	-22.13	751.57	751.66
K	3207+22.07	-22.26	751.52	751.57
L	3207+32.03	-22.40	751.47	751.54
M	3207+41.99	-22.55	751.42	751.46
CL BRG. PIER 2	3207+52.21	-22.73	751.35	751.37
N	3207+62.17	-22.92	751.28	751.30
O	3207+72.13	-23.13	751.21	751.22
P	3207+82.08	-23.35	751.14	751.15
CL BRG. N. ABUT.	3207+95.20	-23.67	751.04	751.06
BK. N. ABUT.	3207+98.20	-23.75	751.02	751.04

BEAM 2

Location	Station	Offset	Theoretical Grade Elevations	Theoretical Grade Elevations Adjusted for DL Deflection & Grinding
BK. S. ABUT.	3205+89.50	-14.59	751.49	751.51
CL BRG. S. ABUT.	3205+92.51	-14.56	751.50	751.52
A	3206+02.48	-14.49	751.52	751.54
B	3206+12.46	-14.43	751.54	751.56
C	3206+22.43	-14.39	751.56	751.57
CL BRG. PIER 1	3206+35.57	-14.36	751.57	751.59
D	3206+45.55	-14.36	751.57	751.60
E	3206+55.52	-14.37	751.56	751.62
F	3206+65.50	-14.40	751.55	751.64
G	3206+75.47	-14.45	751.53	751.65
H	3206+85.45	-14.51	751.51	751.63
I	3206+95.43	-14.59	751.48	751.61
J	3207+05.40	-14.68	751.45	751.56
K	3207+15.38	-14.80	751.40	751.50
L	3207+25.35	-14.93	751.36	751.43
M	3207+35.32	-15.07	751.31	751.35
CL BRG. PIER 2	3207+45.55	-15.24	751.25	751.27
N	3207+55.52	-15.42	751.18	751.19
O	3207+65.49	-15.61	751.11	751.12
P	3207+75.47	-15.83	751.04	751.05
CL BRG. N. ABUT.	3207+88.59	-16.13	750.94	750.96
BK. N. ABUT.	3207+91.60	-16.20	750.92	750.94

BEAM 3

Location	Station	Offset	Theoretical Grade Elevations	Theoretical Grade Elevations Adjusted for DL Deflection & Grinding
BK. S. ABUT.	3205+82.64	-7.27	751.32	751.34
CL BRG. S. ABUT.	3205+85.64	-7.25	751.33	751.35
A	3205+95.63	-7.16	751.36	751.38
B	3206+05.62	-7.09	751.38	751.40
C	3206+15.61	-7.04	751.40	751.41
CL BRG. PIER 1	3206+28.76	-6.99	751.42	751.44
D	3206+38.75	-6.98	751.42	751.46
E	3206+48.74	-6.98	751.42	751.48
F	3206+58.73	-7.00	751.41	751.50
G	3206+68.71	-7.04	751.40	751.51
H	3206+78.70	-7.09	751.38	751.50
I	3206+88.69	-7.16	751.35	751.48
J	3206+98.68	-7.24	751.32	751.44
K	3207+08.66	-7.34	751.28	751.38
L	3207+18.65	-7.46	751.24	751.31
M	3207+28.64	-7.60	751.19	751.24
CL BRG. PIER 2	3207+38.87	-7.75	751.14	751.16
N	3207+48.86	-7.92	751.08	751.09
O	3207+58.84	-8.10	751.01	751.02
P	3207+68.83	-8.31	750.94	750.96
CL BRG. N. ABUT.	3207+81.97	-8.60	750.84	750.86
BK. N. ABUT.	3207+84.98	-8.67	750.82	750.84

SB PG

Location	Station	Offset	Theoretical Grade Elevations	Theoretical Grade Elevations Adjusted for DL Deflection & Grinding
BK. S. ABUT.	3205+75.78	0.00	751.15	751.17
CL BRG. S. ABUT.	3205+78.82	0.00	751.16	751.18
A	3205+88.91	0.00	751.20	751.21
B	3205+98.99	0.00	751.23	751.24
C	3206+09.05	0.00	751.25	751.26
CL BRG. PIER 1	3206+22.27	0.00	751.27	751.29
D	3206+32.29	0.00	751.28	751.32
E	3206+42.30	0.00	751.28	751.34
F	3206+52.29	0.00	751.28	751.37
G	3206+62.27	0.00	751.27	751.38
H	3206+72.23	0.00	751.25	751.37
I	3206+82.18	0.00	751.23	751.35
J	3206+92.11	0.00	751.20	751.31
K	3207+02.03	0.00	751.16	751.26
L	3207+11.93	0.00	751.12	751.19
M	3207+21.82	0.00	751.08	751.12
CL BRG. PIER 2	3207+31.94	0.00	751.02	751.04
N	3207+41.80	0.00	750.97	750.90
O	3207+51.64	0.00	750.90	750.91
P	3207+61.47	0.00	750.83	750.85
CL BRG. N. ABUT.	3207+74.39	0.00	750.73	750.75
BK. N. ABUT.	3207+77.35	0.00	750.71	750.73

BEAM 4

Location	Station	Offset	Theoretical Grade Elevations	Theoretical Grade Elevations Adjusted for DL Deflection & Grinding
BK. S. ABUT.	3205+75.75	0.03	751.15	751.17
CL BRG. S. ABUT.	3205+78.77	0.06	751.16	751.18
A	3205+88.77	0.16	751.19	751.21
B	3205+98.77	0.24	751.22	751.23
C	3206+08.77	0.30	751.24	751.25
CL BRG. PIER 1	3206+21.93	0.36	751.26	751.28
D	3206+31.93	0.39	751.27	751.31
E	3206+41.93	0.40	751.27	751.33
F	3206+51.94	0.39	751.27	751.36
G	3206+61.94	0.36	751.26	751.37
H	3206+71.94	0.32	751.24	751.37
I	3206+81.94	0.27	751.22	751.35
J	3206+91.94	0.19	751.20	751.31
K	3207+01.94	0.10	751.16	751.26
L	3207+11.94	-0.01	751.12	751.19
M	3207+21.94	-0.13	751.08	751.12
CL BRG. PIER 2	3207+32.18	-0.27	751.03	751.05
N	3207+42.18	-0.43	750.97	750.91
O	3207+52.18	-0.60	750.91	750.92
P	3207+62.18	-0.79	750.84	750.86
CL BRG. N. ABUT.	3207+75.34	-1.07	750.74	750.76
BK. N. ABUT.	3207+78.35	-1.14	750.72	750.74

STAGE III/IV CONST. JT.

Location	Station	Offset	Theoretical Grade Elevations	Theoretical Grade Elevations Adjusted for DL Deflection & Grinding
BK. S. ABUT.	3205+74.00	1.88	751.11	751.13
CL BRG. S. ABUT.	3205+77.01	1.92	751.12	751.14
A	3205+87.02	2.02	751.15	751.17
B	3205+97.02	2.10	751.18	751.19
C	3206+07.02	2.17	751.20	751.21
CL BRG. PIER 1	3206+20.20	2.23	751.22	751.24
D	3206+30.20	2.26	751.23	751.27
E	3206+40.20	2.27	751.23	751.29
F	3206+50.21	2.27	751.23	751.32
G	3206+60.21	2.24	751.22	751.34
H	3206+70.21	2.21	751.21	751.34
I	3206+80.22	2.15	751.19	751.32
J	3206+90.22	2.08	751.16	751.28
K	3207+00.22	1.99	751.13	751.23
L	3207+10.23	1.89	751.09	751.16
M	3207+20.23	1.77	751.05	751.09
CL BRG. PIER 2	3207+30.48	1.63	751.00	751.02
N	3207+40.48	1.47	750.94	750.90
O	3207+50.48	1.30	750.88	750.89
P	3207+60.48	1.12	750.82	750.82
CL BRG. N. ABUT.	3207+73.65	0.84	750.72	750.74
BK. N. ABUT.	3207+76.66	0.78	750.70	750.72

BEAM 5

Location	Station	Offset	Theoretical Grade Elevations	Theoretical Grade Elevations Adjusted for DL Deflection & Grinding
BK. S. ABUT.	3205+68.86	7.32	750.98	751.00
CL BRG. S. ABUT.	3205+71.87	7.36	750.99	751.01
A	3205+81.88	7.47	751.02	751.04
B	3205+91.89	7.56	751.06	751.07
C	3206+01.91	7.64	751.08	751.10
CL BRG. PIER 1	3206+15.09	7.71	751.11	751.13
D	3206+25.10	7.75	751.12	751.16
E	3206+35.12	7.77	751.12	751.19
F	3206+45.13	7.77	751.12	751.22
G	3206+55.14	7.76	751.12	751.24
H	3206+65.15	7.73	751.11	751.24
I	3206+75.17	7.68	751.09	751.22
J	3206+85.18	7.62	751.07	751.19
K	3206+95.19	7.54	751.04	751.14
L	3207+05.20	7.44	751.00	751.08
M	3207+15.22	7.33	750.96	751.01
CL BRG. PIER 2	3207+25.48	7.20	750.91	750.94
N	3207+35.49	7.05	750.86	750.87
O	3207+45.50	6.89	750.80	750.82
P	3207+55.51	6.71	750.74	750.73
CL BRG. N. ABUT.	3207+68.69	6.45	750.65	750.67
BK. N. ABUT.	3207+71.70	6.39	750.62	750.64

BEAM 6

Location	Station	Offset	Theoretical Grade Elevations	Theoretical Grade Elevations Adjusted for DL Deflection & Grinding
BK. S. ABUT.	3205+61.20	15.39	750.79	750.81
CL BRG. S. ABUT.	3205+64.22	15.43	750.80	750.82
A	3205+74.24	15.55	750.83	750.85
B	3205+84.27	15.66	750.87	750.88
C	3205+94.29	15.75	750.90	750.91
CL BRG. PIER 1	3206+07.49	15.84	750.93	750.95
D	3206+17.52	15.89	750.95	750.99
E	3206+27.55	15.92	750.96	751.02
F	3206+37.57	15.94	750.96	751.06
G	3206+47.60	15.94	750.96	751.08
H	3206+57.63	15.92	750.95	751.09
I	3206+67.65	15.88	750.94	751.08
J	3206+77.68	15.83	750.92	751.05
K	3206+87.70	15.77	750.90	751.00
L	3206+97.73	15.68	750.87	750.94
M	3207+07.76	15.58	750.83	750.88
CL BRG. PIER 2	3207+18.03	15.46	750.79	750.81
N	3207+28.06	15.33	750.74	750.75
O	3207+38.08	15.18	750.68	750.70
P	3207+48.10	15.01	750.62	750.64
CL BRG. N. ABUT.	3207+61.30	14.77	750.54	750.56
BK. N. ABUT.	3207+64.32	14.71	750.51	750.54

BEAM 7

Location	Station	Offset	Theoretical Grade Elevations	Theoretical Grade Elevations Adjusted for DL Deflection & Grinding
BK. S. ABUT.	3205+53.52	23.45	750.60	750.62
CL BRG. S. ABUT.	3205+56.54	23.50	750.61	750.63
A	3205+66.58	23.63	750.65	750.66
B	3205+76.62	23.75	750.68	750.69
C	3205+86.66	23.85	750.71	750.72
CL BRG. PIER 1	3205+99.88	23.96	750.75	750.77
D	3206+09.92	24.02	750.77	750.81
E	3206+19.96	24.06	750.79	750.85
F	3206+30.00	24.09	750.79	750.90
G	3206+40.04	24.10	750.80	750.92
H	3206+50.08	24.10	750.80	750.93
I	3206+60.12	24.08	750.79	750.93
J	3206+70.16	24.04	750.77	750.90
K	3206+80.20	23.99	750.75	750.86
L	3206+90.24	23.91	750.73	750.80
M	3207+00.27	23.83	750.69	750.74
CL BRG. PIER 2	3207+10.56	23.72	750.66	750.68
N	3207+20.60	23.60	750.61	750.62
O	3207+30.64	23.46	750.56	750.57
P	3207+40.68	23.31	750.51	750.52
CL BRG. N. ABUT.	3207+53.89	23.08	750.42	750.44
BK. N. ABUT.	3207+56.92	23.02	750.40	750.42

BEAM 8

Location	Station	Offset	Theoretical Grade Elevations	Theoretical Grade Elevations Adjusted for DL Deflection & Grinding
BK. S. ABUT.	3205+45.82	31.50	750.42	750.44
CL BRG. S. ABUT.	3205+48.85	31.55	750.43	750.45
A	3205+58.90	31.70	750.46	750.47
B	3205+68.95	31.83	750.49	750.50
C	3205+79.00	31.94	750.52	750.53
CL BRG. PIER 1	3205+92.24	32.06	750.57	750.59
D	3206+02.29	32.14	750.59	750.63
E	3206+12.34	32.20	750.61	750.67
F	3206+22.40	32.24	750.62	750.72
G	3206+32.45	32.26	750.63	750.75
H	3206+42.51	32.27	750.63	750.76
I	3206+52.56	32.26	750.63	750.76
J	3206+62.61	32.24	750.62	750.74
K	3206+72.67	32.20	750.60	750.70
L	3206+82.72	32.14	750.58	750.65
M	3206+92.77	32.06	750.56	750.60
CL BRG. PIER 2	3207+03.08	31.97	750.52	750.54
N	3207+13.13	31.86	750.48	750.49
O	3207+23.18	31.73	750.44	750.45
P	3207+33.23	31.59	750.38	750.40
CL BRG. N. ABUT.	3207+46.47	31.38	750.31	750.33
BK. N. ABUT.	3207+49.50	31.32	750.29	750.31

BEAM 9

Location	Station	Offset	Theoretical Grade Elevations	Theoretical Grade Elevations Adjusted for DL Deflection & Grinding
BK. S. ABUT.	2205+55.55	-32.40	751.85	751.87
CL BRG. S. ABUT.	2205+58.55	-32.35	751.86	751.88
A	2205+68.49	-32.18	751.89	751.90
B	2205+78.44	-32.03	751.91	751.92
C	2205+88.38	-31.90	751.93	751.94
CL BRG. PIER 1	2206+01.48	-31.75	751.95	751.97
D	2206+11.43	-31.66	751.95	751.99
E	2206+21.37	-31.58	751.95	752.01
F	2206+31.32	-31.52	751.94	752.03
G	2206+41.27	-31.47	751.93	752.05
H	2206+51.21	-31.45	751.91	752.04
I	2206+61.16	-31.44	751.89	752.02
J	2206+71.11	-31.44	751.86	751.98
K	2206+81.06	-31.47	751.83	751.92
L	2206+91.00	-31.51	751.78	751.85
M	2207+00.95	-31.56	751.74	751.78
CL BRG. PIER 2	2207+11.15	-31.64	751.68	751.71
N	2207+21.09	-31.73	751.63	751.64
O	2207+31.04	-31.84	751.56	751.57
P	2207+40.99	-31.96	751.50	751.51
CL BRG. N. ABUT.	2207+54.08	-32.15	751.41	751.43
BK. N. ABUT.	2207+57.08	-32.19	751.39	751.41

BEAM 10

Location	Station	Offset	Theoretical Grade Elevations	Theoretical Grade Elevations Adjusted for DL Deflection & Grinding
BK. S. ABUT.	2205+47.90	-24.37	751.66	751.68
CL BRG. S. ABUT.	2205+50.90	-24.32	751.67	751.69
A	2205+60.85	-24.14	751.70	751.72
B	2205+70.81	-23.98	751.73	751.74
C	2205+80.77	-23.83	751.75	751.76
CL BRG. PIER 1	2205+93.89	-23.67	751.77	751.79
D	2206+03.85	-23.56	751.78	751.82
E	2206+13.81	-23.47	751.79	751.85
F	2206+23.77	-23.40	751.79	751.89
G	2206+33.73	-23.34	751.78	751.90
H	2206+43.69	-23.30	751.76	751.90
I	2206+53.65	-23.28	751.74	751.88
J	2206+63.61	-23.27	751.72	751.85
K	2206+73.57	-23.28	751.69	751.79
L	2206+83.53	-23.31	751.65	751.73
M	2206+93.49	-23.35	751.61	751.66
CL BRG. PIER 2	2207+03.70	-23.41	751.56	751.58
N	2207+13.66	-23.49	751.51	751.52
O	2207+23.62	-23.59	751.45	751.46
P	2207+33.58	-23.70	751.38	751.40
CL BRG. N. ABUT.	2207+46.70	-23.87	751.29	751.31
BK. N. ABUT.	2207+49.70	-23.91	751.27	751.29

BEAM 11

Location	Station	Offset	Theoretical Grade Elevations	Theoretical Grade Elevations Adjusted for DL Deflection & Grinding
BK. S. ABUT.	2205+40.22	-16.36	751.46	751.48
CL BRG. S. ABUT.	2205+43.23	-16.30	751.47	751.49
A	2205+53.20	-16.11	751.51	751.53
B	2205+63.17	-15.93	751.55	751.56
C	2205+73.14	-15.77	751.57	751.58
CL BRG. PIER 1	2205+86.27	-15.59	751.60	751.62
D	2205+96.25	-15.47	751.61	751.65
E	2206+06.22	-15.37	751.62	751.69
F	2206+16.19	-15.28	751.62	751.72
G	2206+26.17	-15.21	751.62	751.74
H	2206+36.14	-15.16	751.61	751.75
I	2206+46.12	-15.13	751.60	751.73
J	2206+56.09	-15.11	751.58	751.70
K	2206+66.07	-15.11	751.55	751.65
L	2206+76.04	-15.12	751.52	751.59
M	2206+86.02	-15.15	751.48	751.52
CL BRG. PIER 2	2206+96.24	-15.20	751.43	751.46
N	2207+06.21	-15.27	751.38	751.39
O	2207+16.19	-15.35	751.33	751.34
P	2207+26.16	-15.45	751.27	751.28
CL BRG. N. ABUT.	2207+39.29	-15.60	751.18	751.20
BK. N. ABUT.	2207+42.30	-15.64	751.16	751.18

BEAM 12

Location	Station	Offset	Theoretical Grade Elevations	Theoretical Grade Elevations Adjusted for DL Deflection & Grinding
BK. S. ABUT.	2205+32.53	-8.35	751.26	751.28
CL BRG. S. ABUT.	2205+35.54	-8.29	751.28	751.30
A	2205+45.52	-8.08	751.32	751.33
B	2205+55.50	-7.90	751.36	751.37
C	2205+65.49	-7.73	751.39	751.41
CL BRG. PIER 1	2205+78.64	-7.53	751.42	751.44
D	2205+88.62	-7.39	751.44	751.48
E	2205+98.61	-7.28	751.45	751.51
F	2206+08.60	-7.18	751.46	751.55
G	2206+18.59	-7.10	751.46	751.58
H	2206+28.57	-7.03	751.46	751.59
I	2206+38.56	-6.98	751.45	751.58
J	2206+48.55	-6.95	751.43	751.55
K	2206+58.54	-6.94	751.41	751.51
L	2206+68.53	-6.94	751.38	751.45
M	2206+78.52	-6.96	751.35	751.39
CL BRG. PIER 2	2206+88.75	-7.00	751.30	751.33
N	2206+98.74	-7.05	751.26	751.27
O	2207+08.73	-7.12	751.21	751.22
P	2207+18.72	-7.20	751.15	751.14
CL BRG. N. ABUT.	2207+31.87	-7.34	751.07	751.09
BK. N. ABUT.	2207+34.88	-7.38	751.05	751.07

STAGE I/II CONST. JT.

Location	Station	Offset	Theoretical Grade Elevations	Theoretical Grade Elevations Adjusted for DL Deflection & Grinding
BK. S. ABUT.	2205+27.33	-2.97	751.13	751.15
CL BRG. S. ABUT.	2205+30.34	-2.90	751.14	751.16
A	2205+40.34	-2.69	751.19	751.20
B	2205+50.33	-2.49	751.23	751.24
C	2205+60.32	-2.31	751.26	751.28
CL BRG. PIER 1	2205+73.49	-2.10	751.30	751.32
D	2205+83.48	-1.96	751.32	751.36
E	2205+93.48	-1.84	751.34	751.40
F	2206+03.47	-1.73	751.35	751.44
G	2206+13.47	-1.64	751.35	751.47
H	2206+23.47	-1.56	751.35	751.48
I	2206+33.46	-1.51	751.34	751.47
J	2206+43.46	-1.47	751.33	751.44
K	2206+53.46	-1.44	751.31	751.40
L	2206+63.46	-1.44	751.28	751.35
M	2206+73.45	-1.45	751.25	751.30
CL BRG. PIER 2	2206+83.70	-1.48	751.22	751.24
N	2206+93.70	-1.52	751.17	751.18
O	2207+03.70	-1.58	751.12	751.14
P	2207+13.69	-1.66	751.07	751.08
CL BRG. N. ABUT.	2207+26.86	-1.79	750.99	751.01
BK. N. ABUT.	2207+29.87	-1.82	750.97	750.99

BEAM 13

Location	Station	Offset	Theoretical Grade Elevations	Theoretical Grade Elevations Adjusted for DL Deflection & Grinding
BK. S. ABUT.	2205+25.56	-1.13	751.08	751.10
CL BRG. S. ABUT.	2205+28.57	-1.06	751.09	751.12
A	2205+38.57	-0.85	751.14	751.16
B	2205+48.56	-0.65	751.18	751.20
C	2205+58.56	-0.47	751.22	751.23
CL BRG. PIER 1	2205+71.73	-0.25	751.26	751.28
D	2205+81.72	-0.11	751.28	751.32
E	2205+91.72	0.02	751.30	751.36
F	2206+01.72	0.13	751.31	751.40
G	2206+11.72	0.22	751.31	751.43
H	2206+21.72	0.30	751.31	751.44
I	2206+31.72	0.36	751.31	751.43
J	2206+41.72	0.40	751.29	751.41
K	2206+51.73	0.43	751.27	751.37
L	2206+61.73	0.44	751.25	751.32
M	2206+71.73	0.43	751.22	751.26
CL BRG. PIER 2	2206+81.98	0.41	751.18	751.21
N	2206+91.98	0.36	751.14	751.15
O	2207+01.98	0.31	751.10	751.11
P	2207+11.98	0.23	751.04	751.06
CL BRG. N. ABUT.	2207+25.14	0.11	750.96	750.98
BK. N. ABUT.	2207+28.16	0.07	750.94	750.96

NB PG

Location	Station	Offset	Theoretical Grade Elevations	Theoretical Grade Elevations Adjusted for DL Deflection & Grinding
BK. S. ABUT.	2205+24.47	0.00	751.05	751.07
CL BRG. S. ABUT.	2205+27.54	0.00	751.07	751.09
A	2205+37.75	0.00	751.12	751.14
B	2205+47.94	0.00	751.17	751.18
C	2205+58.12	0.00	751.21	751.22
CL BRG. PIER 1	2205+71.49	0.00	751.25	751.27
D	2205+81.62	0.00	751.28	751.32
E	2205+91.74	0.00	751.30	751.36
F	2206+01.85	0.00	751.31	751.40
G	2206+11.93	0.00	751.32	751.43
H	2206+22.00	0.00	751.32	751.44
I	2206+32.06	0.00	751.31	751.44
J	2206+42.10	0.00	751.30	751.42
K	2206+52.12	0.00	751.28	751.38
L	2206+62.13	0.00	751.26	751.33
M	2206+72.12	0.00	751.23	751.27
CL BRG. PIER 2	2206+82.35	0.00	751.19	751.21
N	2206+92.31	0.00	751.15	751.16
O	2207+02.26	0.00	751.10	751.11
P	2207+12.19	0.00	751.05	751.06
CL BRG. N. ABUT.	2207+25.24	0.00	750.97	750.99
BK. N. ABUT.	2207+28.22	0.00	750.95	750.97

BEAM 14

Location	Station	Offset	Theoretical Grade Elevations	Theoretical Grade Elevations Adjusted for DL Deflection & Grinding
BK. S. ABUT.	2205+18.58	6.08	750.89	750.91
CL BRG. S. ABUT.	2205+21.59	6.15	750.91	750.93
A	2205+31.60	6.38	750.96	750.98
B	2205+41.61	6.59	751.01	751.02
C	2205+51.62	6.79	751.05	751.06
CL BRG. PIER 1	2205+64.80	7.02	751.09	751.11
D	2205+74.81	7.17	751.12	751.16
E	2205+84.82	7.31	751.14	751.20
F	2205+94.83	7.43	751.15	751.24
G	2206+04.84	7.54	751.16	751.28
H	2206+14.86	7.62	751.17	751.29
I	2206+24.87	7.69	751.16	751.29
J	2206+34.88	7.75	751.15	751.27
K	2206+44.89	7.79	751.14	751.24
L	2206+54.91	7.81	751.12	751.19
M	2206+64.92	7.81	751.09	751.14
CL BRG. PIER 2	2206+75.18	7.80	751.06	751.08
N	2206+85.20	7.77	751.02	751.04
O	2206+95.21	7.72	750.98	750.99
P	2207+05.22	7.66	750.93	750.95
CL BRG. N. ABUT.	2207+18.41	7.55	750.86	750.88
BK. N. ABUT.	2207+21.42	7.52	750.84	750.86

BEAM 15

Location	Station	Offset	Theoretical Grade Elevations	Theoretical Grade Elevations Adjusted for DL Deflection & Grinding
BK. S. ABUT.	2205+11.58	13.29	750.71	750.73
CL BRG. S. ABUT.	2205+14.59	13.36	750.72	750.74
A	2205+24.61	13.60	750.78	750.79
B	2205+34.63	13.82	750.83	750.84
C	2205+44.66	14.03	750.87	750.88
CL BRG. PIER 1	2205+57.85	14.27	750.92	750.94
D	2205+67.87	14.44	750.95	750.99
E	2205+77.90	14.59	750.98	751.04
F	2205+87.92	14.72	751.00	751.09
G	2205+97.95	14.84	751.01	751.12
H	2206+07.97	14.94	751.02	751.14
I	2206+18.00	15.02	751.02	751.14
J	2206+28.02	15.09	751.01	751.13
K	2206+38.05	15.14	751.00	751.10
L	2206+48.07	15.17	750.99	751.06
M	2206+58.10	15.19	750.97	751.01
CL BRG. PIER 2	2206+68.37	15.18	750.94	750.96
N	2206+78.40	15.17	750.90	750.91
O	2206+88.42	15.13	750.86	750.88
P	2206+98.45	15.08	750.82	750.83
CL BRG. N. ABUT.	2207+11.65	14.98	750.75	750.77
BK. N. ABUT.	2207+14.67	14.96	750.73	750.75

BEAM 16

Location	Station	Offset	Theoretical Grade Elevations	Theoretical Grade Elevations Adjusted for DL Deflection & Grinding
BK. S. ABUT.	2205+04.56	20.48	750.52	750.54
CL BRG. S. ABUT.	2205+07.58	20.56	750.54	750.56
A	2205+17.61	20.81	750.59	750.61
B	2205+27.64	21.05	750.65	750.66
C	2205+37.68	21.26	750.70	750.71
CL BRG. PIER 1	2205+50.89	21.52	750.75	750.77
D	2205+60.92	21.70	750.78	750.82
E	2205+70.96	21.86	750.81	750.87
F	2205+81.00	22.01	750.84	750.93
G	2205+91.03	22.14	750.85	750.97
H	2206+01.07	22.25	750.86	750.99
I	2206+11.11	22.34	750.87	750.99
J	2206+21.14	22.42	750.87	750.96
K	2206+31.18	22.48	750.86	750.91
L	2206+41.22	22.53	750.85	750.92
M	2206+51.26	22.55	750.83	750.88
CL BRG. PIER 2	2206+61.54	22.56	750.81	750.83
N	2206+71.58	22.56	750.78	750.79
O	2206+81.62	22.53	750.74	750.76
P	2206+91.66	22.49	750.70	750.72
CL BRG. N. ABUT.	2207+04.87	22.41	750.64	750.66
BK. N. ABUT.	2207+07.90	22.39	750.62	750.64

W. FACE OF PARAPET NB BRIDGE

Location	Station	Offset	Theoretical Grade Elevations	Theoretical Grade Elevations Adjusted for Grinding
S. End S. Approach	2205+29.04	-35.02	751.78	751.80
A1	2205+38.98	-34.80	751.82	751.84
A2	2205+48.92	-34.61	751.86	751.89
N. End. S. Approach	2205+58.86	-34.42	751.90	751.92

W. EDGE OF PAVEMENT

Location	Station	Offset	Theoretical Grade Elevations	Theoretical Grade Elevations Adjusted for Grinding
S. End S. Approach	2205+18.43	-24.00	751.49	751.52
A1	2205+28.61	-24.00	751.55	751.57
A2	2205+38.78	-24.00	751.61	751.63
N. End. S. Approach	2205+48.93	-24.00	751.65	751.67

STAGE I/II CONST. JT.

Location	Station	Offset	Theoretical Grade Elevations	Theoretical Grade Elevations Adjusted for Grinding
S. End S. Approach	2204+98.73	-3.68	750.97	750.99
A1	2205+08.72	-3.42	751.02	751.04
A2	2205+18.71	-3.17	751.08	751.10
N. End. S. Approach	2205+28.70	-2.94	751.13	751.15

NB PG

Location	Station	Offset	Theoretical Grade Elevations	Theoretical Grade Elevations Adjusted for Grinding
S. End S. Approach	2204+95.13	0.00	750.87	750.89
A1	2205+05.39	0.00	750.93	750.96
A2	2205+15.64	0.00	751.00	751.02
N. End. S. Approach	2205+25.86	0.00	751.06	751.08

E. EDGE OF PAVEMENT

Location	Station	Offset	Theoretical Grade Elevations	Theoretical Grade Elevations Adjusted for Grinding
S. End S. Approach	2204+83.38	12.00	750.56	750.58
A1	2204+93.68	12.00	750.62	750.64
A2	2205+03.96	12.00	750.69	750.71
N. End. S. Approach	2205+14.23	12.00	750.75	750.77

E. FACE OF PARAPET & GUTTERLINE NB

Location	Station	Offset	Theoretical Grade Elevations	Theoretical Grade Elevations Adjusted for Grinding
S. End S. Approach	2204+73.30	22.23	750.29	750.31
A1	2204+83.57	22.30	750.36	750.38
A2	2204+93.83	22.36	750.42	750.44
N. End. S. Approach	2205+04.10	22.39	750.48	750.50

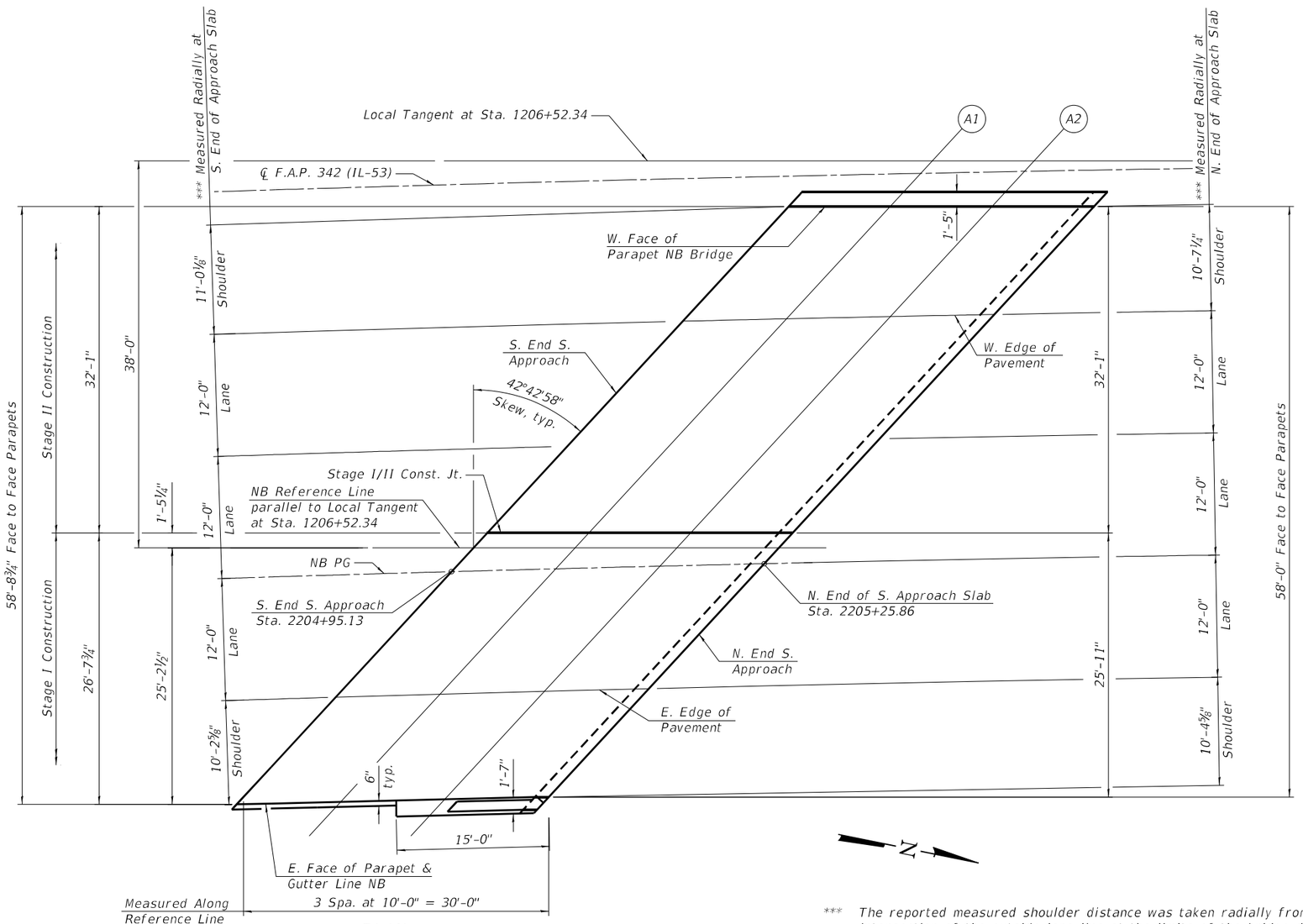

PLAN

South Approach

*** The reported measured shoulder distance was taken radially from the intersection of the outside lane line at the limits of the bridge deck taken at the front face of the parapet.

Notes:
1. All dimensions measured perpendicular to reference line unless otherwise noted.
2. For Offset sketch see sheet 2 of 66.

MODEL: Default
FILE NAME: S:\OL16300-6399\6346\113\Drawings\CAD\Micro-SSA\CAD_Sheets\0160376112-C3-015-ASE1-SA1.dgn
9/20/2024 3:11:14 PM

STRAND ASSOCIATES
1170 SOUTH HOUBOLT ROAD
JOLIET, ILLINOIS 60431
(815) 744-4200
IDFPR NO. 184-001273

USER NAME = codyh	DESIGNED - JAS	REVISED -	
	CHECKED - NDR	REVISED -	
PLOT SCALE = 0:2.0000 ':" / in.	DRAWN - CJH	REVISED -	
PLOT DATE = 9/20/2024	CHECKED - TJE	REVISED -	

STATE OF ILLINOIS
DEPARTMENT OF TRANSPORTATION

TOP OF SOUTH APPROACH SLAB ELEVATIONS (NB)
STRUCTURE NO. 016-0376 (NB)

SHEET 15 OF 66 SHEETS

F.A.P. RTE.	SECTION	COUNTY	TOTAL SHEETS	SHEET NO.
342	(531) BR 23	COOK	1211	700
		CONTRACT NO. 62W38		
		ILLINOIS	FED. AID PROJECT	