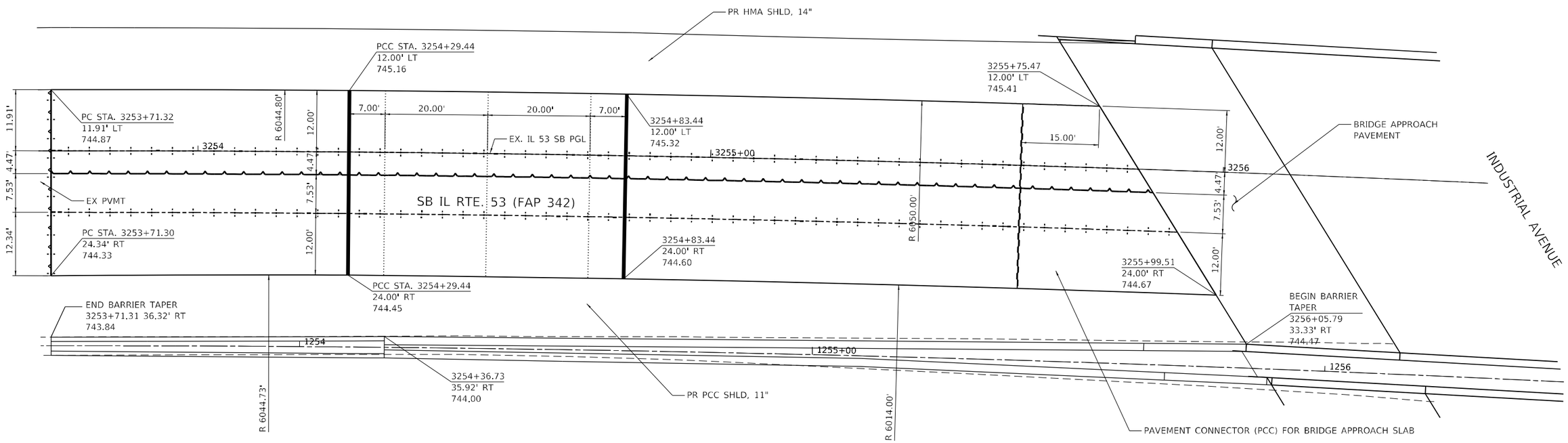

LEGEND:

- LONGITUDINAL SAWED JOINTS No. 6 EPOXY COATED TIE BARS AT 36" CTS
- LONGITUDINAL CONSTRUCTION JOINT DRILL AND GROUT No. 6 EPOXY COATED TIE BARS AT 36" CTS.
- TRANSVERSE CONSTRUCTION JOINT, DRILL AND GROUT 9 No. 6 EPOXY COATED TIE BARS EVENLY SPACED ACROSS 12' WIDTH
- TRANSVERSE EXPANSION JOINT, DRILL AND GROUT DOWEL BARS AT 12" CTS.
- TRANSVERSE TERMINAL JOINT
- PROPOSED LUG ℄

N

0 10 20 30

SCALE IN FEET

NOTES:

1. SEE NB IL 53 OVER INDUSTRIAL AVENUE SOUTH APPROACH FOR BARRIER DETAILS

SN #016-1120 - SB IL 53 OVER INDUSTRIAL AVENUE SOUTH APPROACH

MODEL: Default
FILE NAME: S:\JOL\6320-6399\6346\130\Drawings\CADMicro-SS4\CAD_Sheets\C3-D162N91-sht-bpsc-details-16-Industrial-SA.dgn

STRAND ASSOCIATES®
1170 SOUTH HOUBOLT ROAD
JOLIET, ILLINOIS 60431
(815) 744-4200

USER NAME = StevenB	DESIGNED - MAG	REVISED -	
	DRAWN - DJW	REVISED -	
PLOT SCALE = 20.0000 ' / in.	CHECKED - DWG	REVISED -	
PLOT DATE = 9/27/2024	DATE - 8/23/2024	REVISED -	

STATE OF ILLINOIS
DEPARTMENT OF TRANSPORTATION

BRIDGE APPROACH DETAILS

SCALE: 1" = 10' | SHEET 6 OF 18 SHEETS | STA. 3253+71.31 TO STA. 3256+05.79

F.A.P. RTE.	SECTION	COUNTY	TOTAL SHEETS	SHEET NO.
342	(531) BR 23	COOK	1211	401
		CONTRACT NO. 62W38		
		ILLINOIS FED. AID PROJECT		

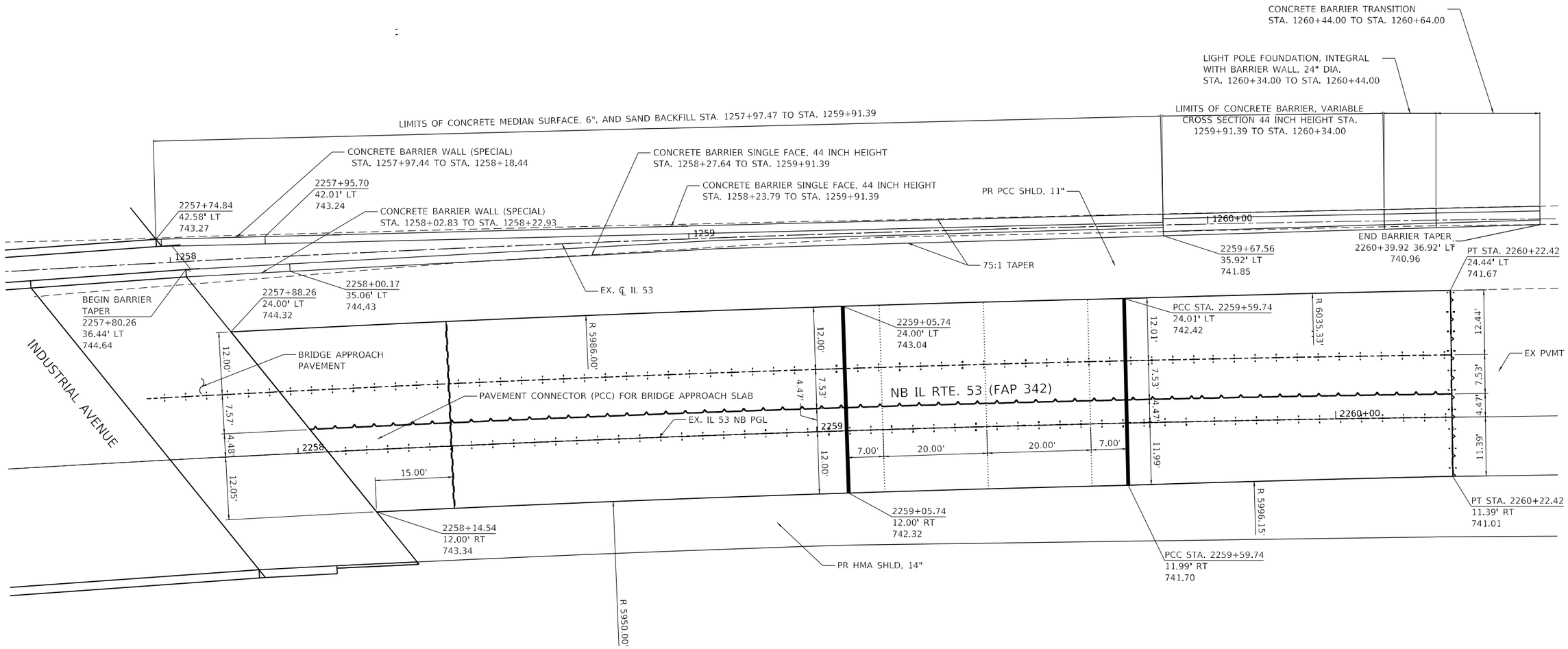

LEGEND:

- LONGITUDINAL SAWED JOINTS No. 6 EPOXY COATED TIE BARS AT 36" CTS
- LONGITUDINAL CONSTRUCTION JOINT DRILL AND GROUT No. 6 EPOXY COATED TIE BARS AT 36" CTS.
- TRANSVERSE CONSTRUCTION JOINT, DRILL AND GROUT 9 No. 6 EPOXY COATED TIE BARS EVENLY SPACED ACROSS 12' WIDTH
- TRANSVERSE EXPANSION JOINT, DRILL AND GROUT DOWEL BARS AT 12" CTS.
- TRANSVERSE TERMINAL JOINT
- PROPOSED LUG ℄

N

0 10 20 30
SCALE IN FEET

SN #016-0375 - NB IL 53 OVER INDUSTRIAL AVENUE NORTH APPROACH

NOTES:

1. SEE STANDARD BD-27 FOR ADDITIONAL MEDIAN BARRIER TRANSITION DETAILS
2. SEE STRUCTURE PLAN FOR BARRIER WALL (SPECIAL) DETAILS

MODEL: Default
FILE NAME: S:\OL\6300-6399\6346113\Drawings\CADMicro-SSA\CAD_Sheets\C3-D162N91-sht-bbpc-details-17-Industrial-SA.dgn

STRAND ASSOCIATES®
1170 SOUTH HOUBOLT ROAD
JOLIET, ILLINOIS 60431
(815) 744-4200

USER NAME = StevenB	DESIGNED - MAG	REVISED -	
	DRAWN - DJW	REVISED -	
PLOT SCALE = 20.0000 ' / in.	CHECKED - DWG	REVISED -	
PLOT DATE = 9/27/2024	DATE - 8/23/2024	REVISED -	

STATE OF ILLINOIS
DEPARTMENT OF TRANSPORTATION

BRIDGE APPROACH DETAILS

SCALE: 1" = 10' | SHEET 7 OF 18 SHEETS | STA. 1258+02.89 TO STA. 2260+22.54

F.A.P. RTE.	SECTION	COUNTY	TOTAL SHEETS	SHEET NO.
342	(531) BR 23	COOK	1211	402
		CONTRACT NO. 62W38		
		ILLINOIS	FED. AID PROJECT	

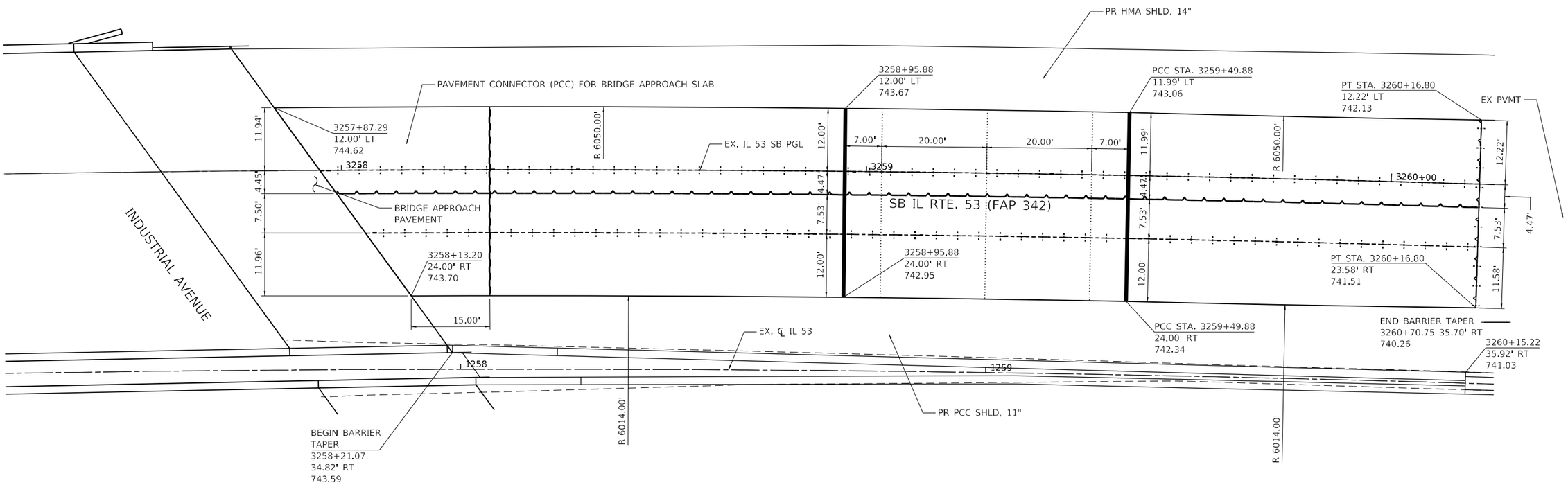

LEGEND:

- LONGITUDINAL SAWED JOINTS No. 6 EPOXY COATED TIE BARS AT 36" CTS
- LONGITUDINAL CONSTRUCTION JOINT DRILL AND GROUT No. 6 EPOXY COATED TIE BARS AT 36" CTS.
- TRANSVERSE CONSTRUCTION JOINT, DRILL AND GROUT 9 No. 6 EPOXY COATED TIE BARS EVENLY SPACED ACROSS 12' WIDTH
- TRANSVERSE EXPANSION JOINT, DRILL AND GROUT DOWEL BARS AT 12" CTS.
- TRANSVERSE TERMINAL JOINT
- PROPOSED LUG ℄

0 10 20 30
SCALE IN FEET

NOTES:

1. SEE NB IL 53 OVER INDUSTRIAL AVENUE NORTH APPROACH FOR BARRIER DETAILS

SN #016-1120 - SB IL 53 OVER INDUSTRIAL AVENUE NORTH APPROACH

MODEL: Default
FILE NAME: S:\JOB\6300-6399\6346113\Drawings\CADMicro-SSA\CAD_Sheets\C3-016ZN91-int-topo-details-18-Industrial-SAI.dgn

STRAND ASSOCIATES®
1170 SOUTH HOUBOLT ROAD
JOLIET, ILLINOIS 60431
(815) 744-4200

USER NAME = StevenB	DESIGNED - MAG	REVISED -
	DRAWN - DJW	REVISED -
PLOT SCALE = 20.0000 ' / in.	CHECKED - DWG	REVISED -
PLOT DATE = 9/27/2024	DATE - 8/23/2024	REVISED -

STATE OF ILLINOIS
DEPARTMENT OF TRANSPORTATION

BRIDGE APPROACH DETAILS

SCALE: 1" = 10' | SHEET 8 OF 18 SHEETS | STA. 3258+21.10 TO STA. 3260+15.22

F.A.P. RTE.	SECTION	COUNTY	TOTAL SHEETS	SHEET NO.
342	(531) BR 23	COOK	1211	403
		CONTRACT NO. 62W38		
		ILLINOIS	FED. AID PROJECT	

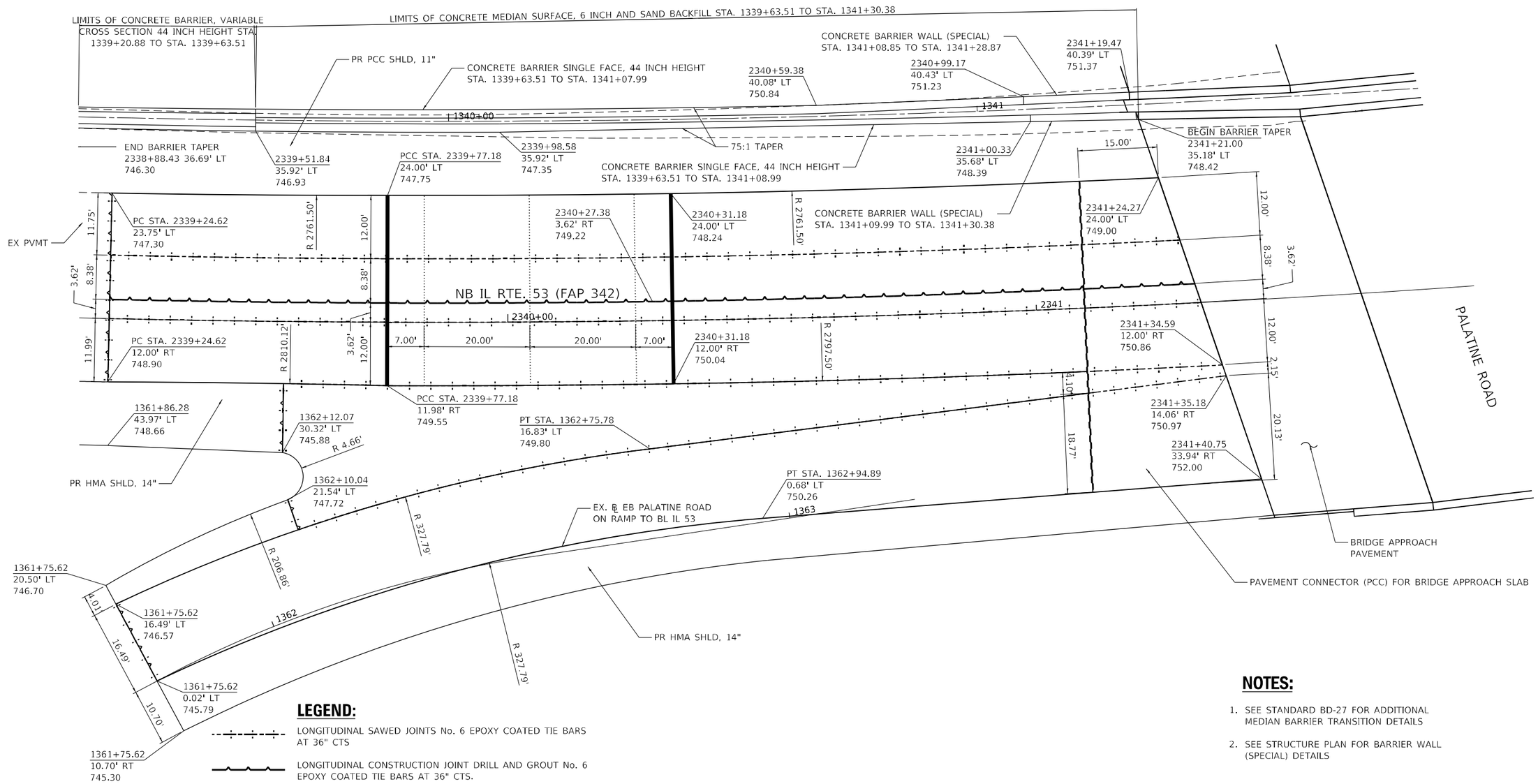

LEGEND:

- LONGITUDINAL SAWED JOINTS No. 6 EPOXY COATED TIE BARS AT 36" CTS
- LONGITUDINAL CONSTRUCTION JOINT DRILL AND GROUT No. 6 EPOXY COATED TIE BARS AT 36" CTS.
- TRANSVERSE CONSTRUCTION JOINT, DRILL AND GROUT 9 No. 6 EPOXY COATED TIE BARS EVENLY SPACED ACROSS 12' WIDTH
- TRANSVERSE EXPANSION JOINT, DRILL AND GROUT DOWEL BARS AT 12" CTS.
- TRANSVERSE TERMINAL JOINT
- PROPOSED LUG ℄

NOTES:

1. SEE STANDARD BD-27 FOR ADDITIONAL MEDIAN BARRIER TRANSITION DETAILS
2. SEE STRUCTURE PLAN FOR BARRIER WALL (SPECIAL) DETAILS

SN #016-0373 - NB IL 53 OVER PALATINE ROAD SOUTH APPROACH

MODEL: Default
FILE NAME: S:\0_16300-16399\16349\113D\Drawings\CADMicro-SSA\CAD_Sheets\C3-D162N91-int-bpjc-details-23-nbstine-SA1.dgn

STRAND ASSOCIATES®
1170 SOUTH HOUBOLT ROAD
JOLIET, ILLINOIS 60431
(815) 744-4200

USER NAME = StevenB	DESIGNED - MAG	REVISED -	
	DRAWN - DJW	REVISED -	
PLOT SCALE = 20.0000 ' / in.	CHECKED - DWG	REVISED -	
PLOT DATE = 9/27/2024	DATE - 8/23/2024	REVISED -	

STATE OF ILLINOIS
DEPARTMENT OF TRANSPORTATION

BRIDGE APPROACH DETAILS

SCALE: 1" = 10' | SHEET 13 OF 18 SHEETS | STA. 2338+88.43 TO STA. 2341+21.02

F.A.P. RTE.	SECTION	COUNTY	TOTAL SHEETS	SHEET NO.
342	(531) BR 23	COOK	1211	404
		CONTRACT NO. 62W38		
		ILLINOIS FED. AID PROJECT		

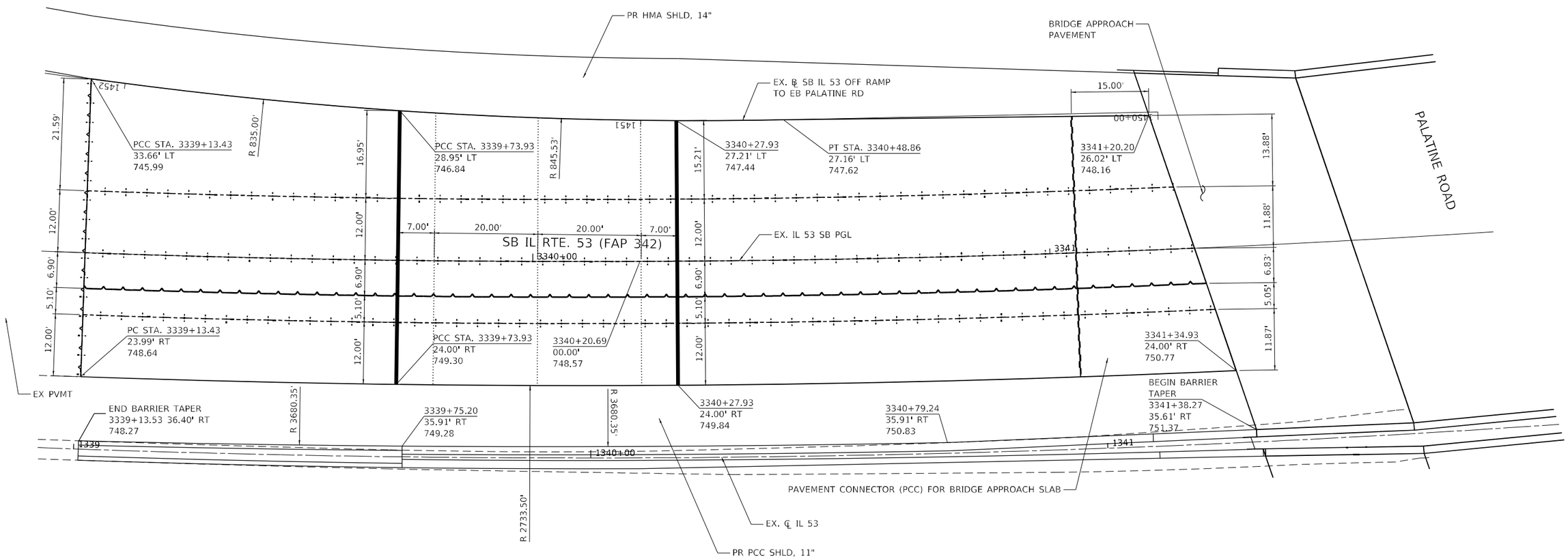

LEGEND:

- LONGITUDINAL SAWED JOINTS No. 6 EPOXY COATED TIE BARS AT 36" CTS
- LONGITUDINAL CONSTRUCTION JOINT DRILL AND GROUT No. 6 EPOXY COATED TIE BARS AT 36" CTS.
- TRANSVERSE CONSTRUCTION JOINT, DRILL AND GROUT 9 No. 6 EPOXY COATED TIE BARS EVENLY SPACED AROUND 12' WIDTH
- TRANSVERSE EXPANSION JOINT, DRILL AND GROUT DOWEL BARS AT 12" CTS.
- TRANSVERSE TERMINAL JOINT
- PROPOSED LUG ℄

N

0 10 20 30

SCALE IN FEET

SN #016-0970 - SB IL 53 OVER PALATINE ROAD SOUTH APPROACH

NOTES:

1. SEE NB IL 53 OVER PALATINE ROAD SOUTH APPROACH FOR BARRIER DETAILS

MODEL: Default
FILE NAME: S:\JOB\6300-6399\6346113\Drawings\CADD\Micro-Station\CAD Sheets\C3-D162N91-int-topic-details-24-Palatine-S4.dgn

STRAND ASSOCIATES®
1170 SOUTH HOUBOLT ROAD
JOLIET, ILLINOIS 60431
(815) 744-4200

USER NAME = StevenB	DESIGNED - MAG	REVISED -	
	DRAWN - DJW	REVISED -	
PLOT SCALE = 20.0000 ' / in.	CHECKED - DWG	REVISED -	
PLOT DATE = 9/27/2024	DATE - 8/23/2024	REVISED -	

STATE OF ILLINOIS
DEPARTMENT OF TRANSPORTATION

BRIDGE APPROACH DETAILS

SCALE: 1" = 10' | SHEET 14 OF 18 SHEETS | STA. 3339+13.53 TO STA. 3341+38.26

F.A.P. RTE.	SECTION	COUNTY	TOTAL SHEETS	SHEET NO.
342	(531) BR 23	COOK	1211	405
		CONTRACT NO. 62W38		
		ILLINOIS	FED. AID PROJECT	

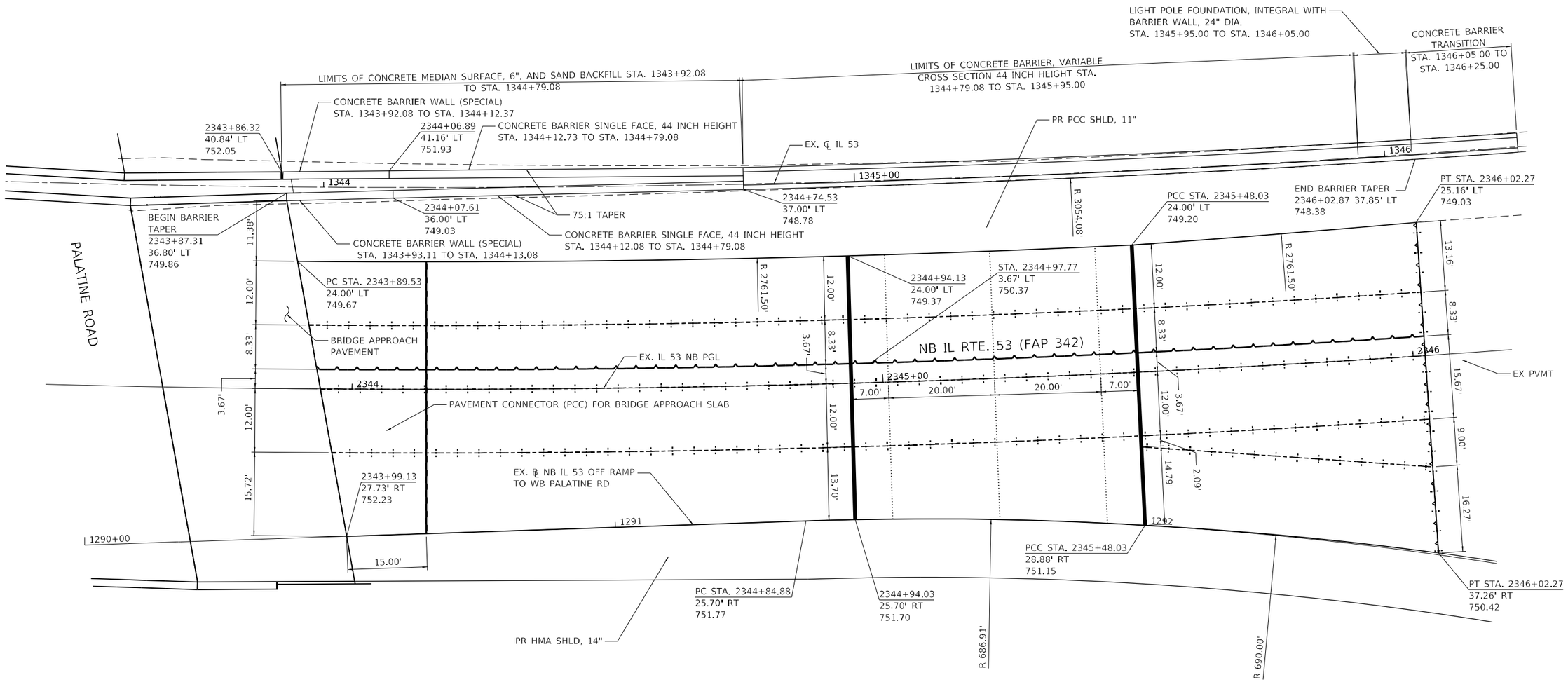

LEGEND:

- LONGITUDINAL SAWED JOINTS No. 6 EPOXY COATED TIE BARS AT 36" CTS
- LONGITUDINAL CONSTRUCTION JOINT DRILL AND GROUT No. 6 EPOXY COATED TIE BARS AT 36" CTS.
- TRANSVERSE CONSTRUCTION JOINT, DRILL AND GROUT 9 No. 6 EPOXY COATED TIE BARS EVENLY SPACED ACROSS 12' WIDTH
- TRANSVERSE EXPANSION JOINT, DRILL AND GROUT DOWEL BARS AT 12" CTS.
- TRANSVERSE TERMINAL JOINT
- PROPOSED LUG ℄

N

0 10 20 30
SCALE IN FEET

SN #016-0373 - NB IL 53 OVER PALATINE ROAD NORTH APPROACH

NOTES:

1. SEE STANDARD BD-27 FOR ADDITIONAL MEDIAN BARRIER TRANSITION DETAILS
2. SEE STRUCTURE PLAN FOR BARRIER WALL (SPECIAL) DETAILS

MODEL: Default
FILE NAME: S:\0.16300-63996346\13\Drawings\CADMicro-SSA\CAD_Sheets\C3-D162N91-sht-bpp-details-2-Palatine-SAL.dgn

STRAND ASSOCIATES®
1170 SOUTH HOUBOLT ROAD
JOLIET, ILLINOIS 60431
(815) 744-4200

USER NAME = StevenB	DESIGNED - MAG	REVISED -	
	DRAWN - DJW	REVISED -	
PLOT SCALE = 20.0000 ' / in.	CHECKED - DWG	REVISED -	
PLOT DATE = 9/27/2024	DATE - 8/23/2024	REVISED -	

STATE OF ILLINOIS
DEPARTMENT OF TRANSPORTATION

BRIDGE APPROACH DETAILS

SCALE: 1" = 10' | SHEET 15 OF 18 SHEETS | STA. 2343+87.31 TO STA. 2346+02.87

F.A.P. RTE.	SECTION	COUNTY	TOTAL SHEETS	SHEET NO.
342	(531) BR 23	COOK	1211	406
		CONTRACT NO. 62W38		
	ILLINOIS	FED. AID PROJECT		

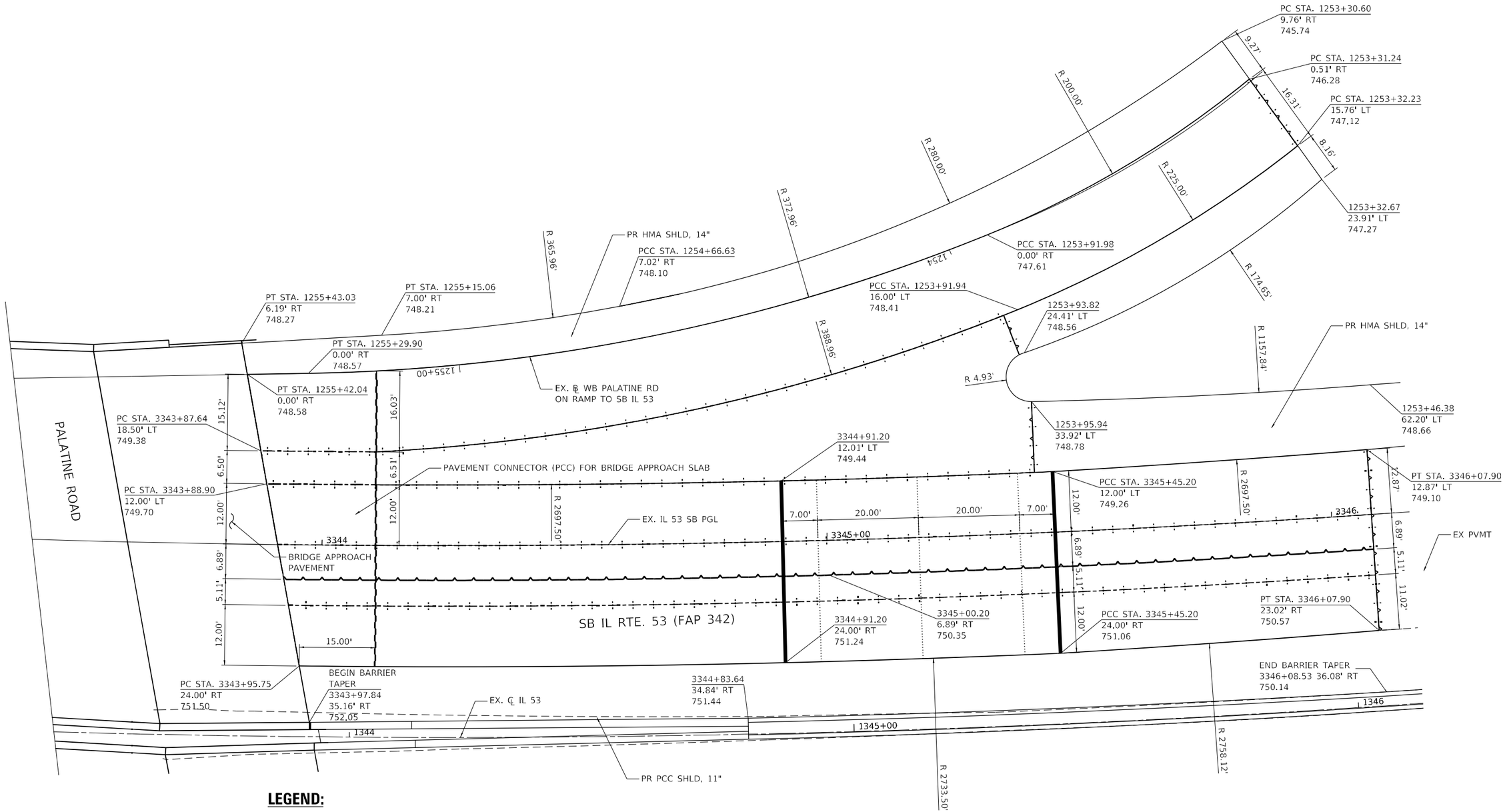

LEGEND:

- LONGITUDINAL SAWED JOINTS No. 6 EPOXY COATED TIE BARS AT 36" CTS
- LONGITUDINAL CONSTRUCTION JOINT DRILL AND GROUT No. 6 EPOXY COATED TIE BARS AT 36" CTS.
- TRANSVERSE CONSTRUCTION JOINT, DRILL AND GROUT 9 No. 6 EPOXY COATED TIE BARS EVENLY SPACED ACROSS 12' WIDTH
- TRANSVERSE EXPANSION JOINT, DRILL AND GROUT DOWEL BARS AT 12" CTS.
- TRANSVERSE TERMINAL JOINT
- PROPOSED LUG ℄

N

0 10 20 30
SCALE IN FEET

SN #016-0970 - SB IL 53 OVER PALATINE ROAD NORTH APPROACH

NOTES:

1. SEE NB IL 53 OVER PALATINE ROAD NORTH APPROACH FOR BARRIER DETAILS

MODEL: Default
FILE NAME: S:\JOB\6300-6399\6346\113\Drawings\CAD\Micros-SS4\CAD Sheets\C3-D162N91-IH-stpic-details-26-PalatineSA.dgn

STRAND ASSOCIATES
1170 SOUTH HOUBOLT ROAD
JOLIET, ILLINOIS 60431
(815) 744-4200

USER NAME = StevenB	DESIGNED - MAG	REVISED -	
	DRAWN - DJW	REVISED -	
PLOT SCALE = 20.0000 ' / in.	CHECKED - DWG	REVISED -	
PLOT DATE = 9/27/2024	DATE - 8/23/2024	REVISED -	

STATE OF ILLINOIS
DEPARTMENT OF TRANSPORTATION

BRIDGE APPROACH DETAILS

SCALE: 1" = 10' | SHEET 16 OF 18 SHEETS | STA. 3343+98.10 TO STA. 3346+08.53

F.A.P. RTE.	SECTION	COUNTY	TOTAL SHEETS	SHEET NO.
342	(531) BR 23	COOK	1211	407
		CONTRACT NO. 62W38		
	ILLINOIS	FED. AID PROJECT		

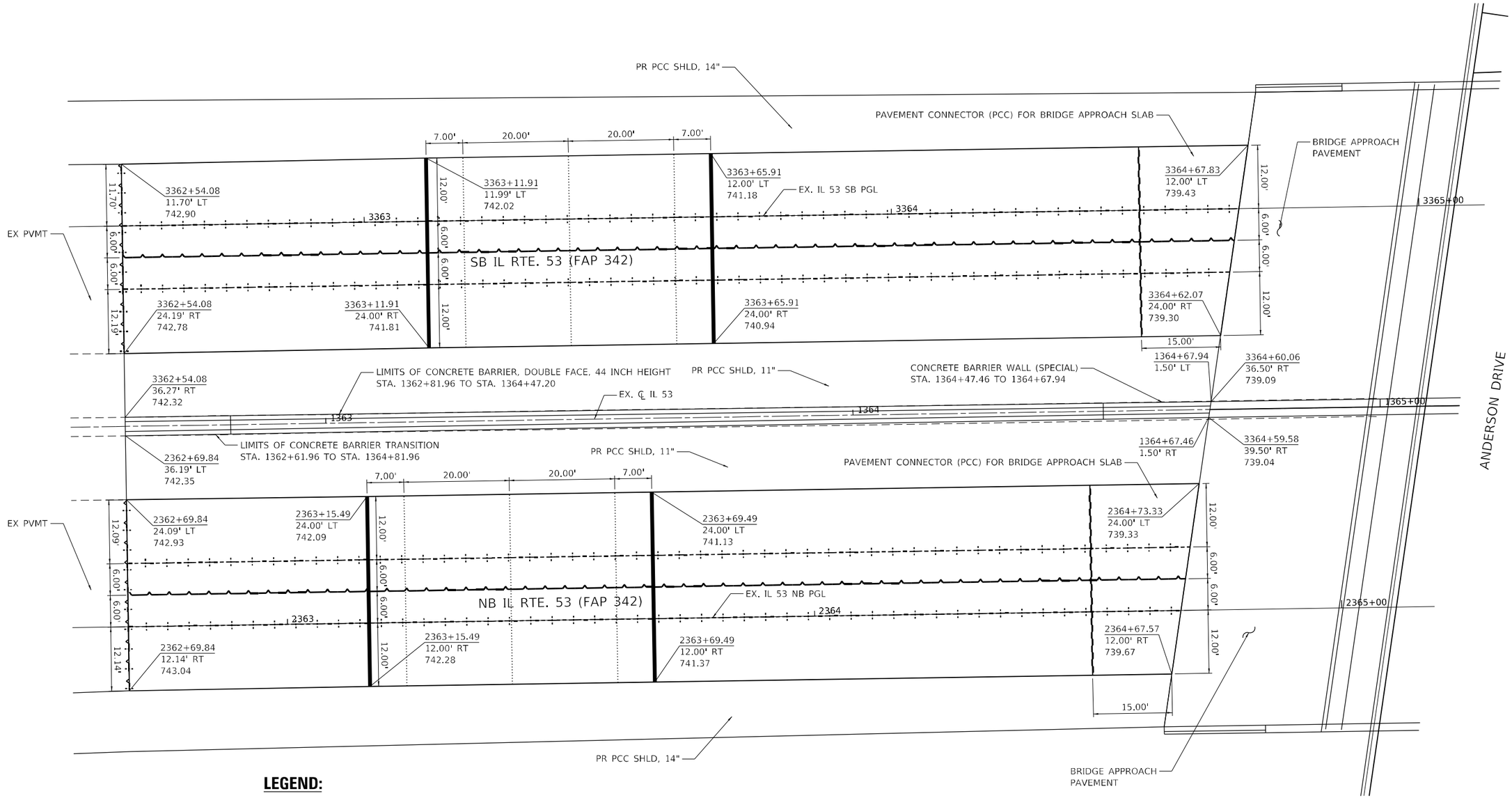

LEGEND:

- LONGITUDINAL SAWED JOINTS No. 6 EPOXY COATED TIE BARS AT 36" CTS
- LONGITUDINAL CONSTRUCTION JOINT DRILL AND GROUT No. 6 EPOXY COATED TIE BARS AT 36" CTS.
- TRANSVERSE CONSTRUCTION JOINT, DRILL AND GROUT 9 No. 6 EPOXY COATED TIE BARS EVENLY SPACED ACROSS 12' WIDTH
- TRANSVERSE EXPANSION JOINT, DRILL AND GROUT DOWEL BARS AT 12" CTS.
- TRANSVERSE TERMINAL JOINT
- PROPOSED LUG ℄

SN #016-0372 - IL 53 OVER ANDERSON DRIVE
SOUTH APPROACH

NOTES:

1. SEE STANDARD BD-27 FOR ADDITIONAL MEDIAN BARRIER TRANSITION DETAILS
2. SEE STRUCTURE PLAN FOR BARRIER WALL (SPECIAL) DETAILS

STRAND ASSOCIATES
1170 SOUTH HOUBOLT ROAD
JOLIET, ILLINOIS 60431
(815) 744-4200

USER NAME = StevenB	DESIGNED - MAG	REVISED -
	DRAWN - DJW	REVISED -
PLOT SCALE = 20.0000 ' / in.	CHECKED - DWG	REVISED -
PLOT DATE = 9/27/2024	DATE - 8/23/2024	REVISED -

STATE OF ILLINOIS
DEPARTMENT OF TRANSPORTATION

BRIDGE APPROACH DETAILS

SCALE: 1" = 10' | SHEET 17 OF 18 SHEETS | STA. 3362+54.08 TO STA. 3364+60.06

F.A.P. RTE.	SECTION	COUNTY	TOTAL SHEETS	SHEET NO.
342	(531) BR 23	COOK	1211	408
		CONTRACT NO. 62W38		
		ILLINOIS	FED. AID PROJECT	

MODEL: Default
FILE NAME: S:\DOI\6300-6399\6346\13\Drawings\CADMicro-SSA\CAD_Sheets\C3-D162N01-sht-basic-details-27-Anderson-SA.dgn

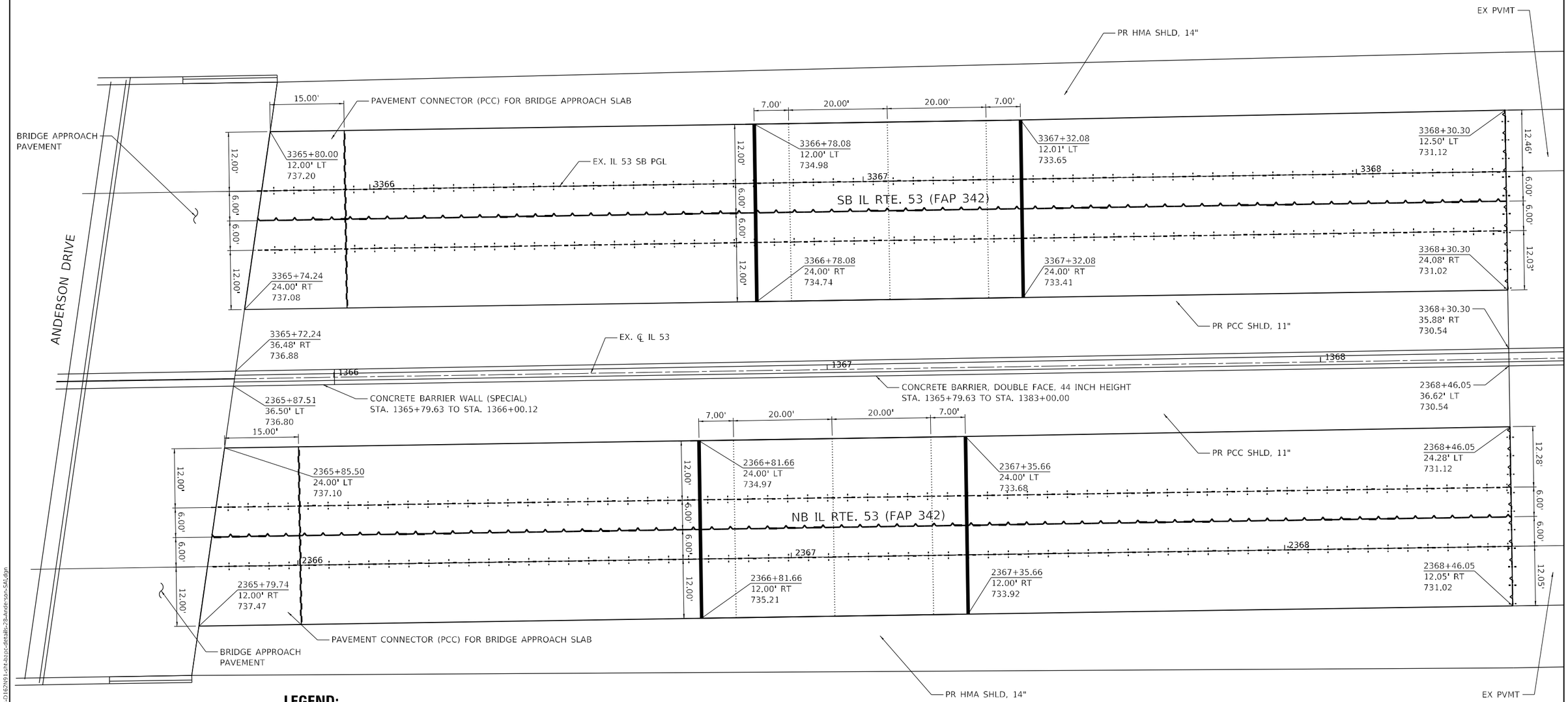

LEGEND:

- LONGITUDINAL SAWED JOINTS No. 6 EPOXY COATED TIE BARS AT 36" CTS
- LONGITUDINAL CONSTRUCTION JOINT DRILL AND GROUT No. 6 EPOXY COATED TIE BARS AT 36" CTS.
- TRANSVERSE CONSTRUCTION JOINT, DRILL AND GROUT 9 No. 6 EPOXY COATED TIE BARS EVENLY SPACED ACROSS 12' WIDTH
- TRANSVERSE EXPANSION JOINT, DRILL AND GROUT DOWEL BARS AT 12" CTS.
- TRANSVERSE TERMINAL JOINT
- PROPOSED LUG ℄

N

0 10 20 30
SCALE IN FEET

SN #016-0372 - IL 53 OVER ANDERSON DRIVE
NORTH APPROACH

NOTES:

1. SEE STANDARD BD-27 FOR ADDITIONAL MEDIAN BARRIER TRANSITION DETAILS
2. SEE STRUCTURE PLAN FOR BARRIER WALL (SPECIAL) DETAILS

MODEL: Default
FILE NAME: S:\DOI\6300-6399\6346113\Drawings\CADMicro-SSA\CAD_Sheets\C3-D162N01-sht-basic-details-2B-Anderson-SA.dgn

STRAND ASSOCIATES 1170 SOUTH HOUBOLT ROAD JOLIET, ILLINOIS 60431 (815) 744-4200	USER NAME = StevenB	DESIGNED - MAG	REVISED -	STATE OF ILLINOIS DEPARTMENT OF TRANSPORTATION	BRIDGE APPROACH DETAILS
		DRAWN - DJW	REVISED -		
	PLOT SCALE = 20.0000 ' / in.	CHECKED - DWG	REVISED -		
	PLOT DATE = 9/27/2024	DATE - 8/23/2024	REVISED -		SCALE: 1" = 10' SHEET 18 OF 18 SHEETS STA. 3365+72.23 TO STA. 3368+30.30

F.A.P. RTE.	SECTION	COUNTY	TOTAL SHEETS	SHEET NO.
342	(531) BR 23	COOK	1211	409
		CONTRACT NO. 62W38		
	ILLINOIS	FED. AID PROJECT		

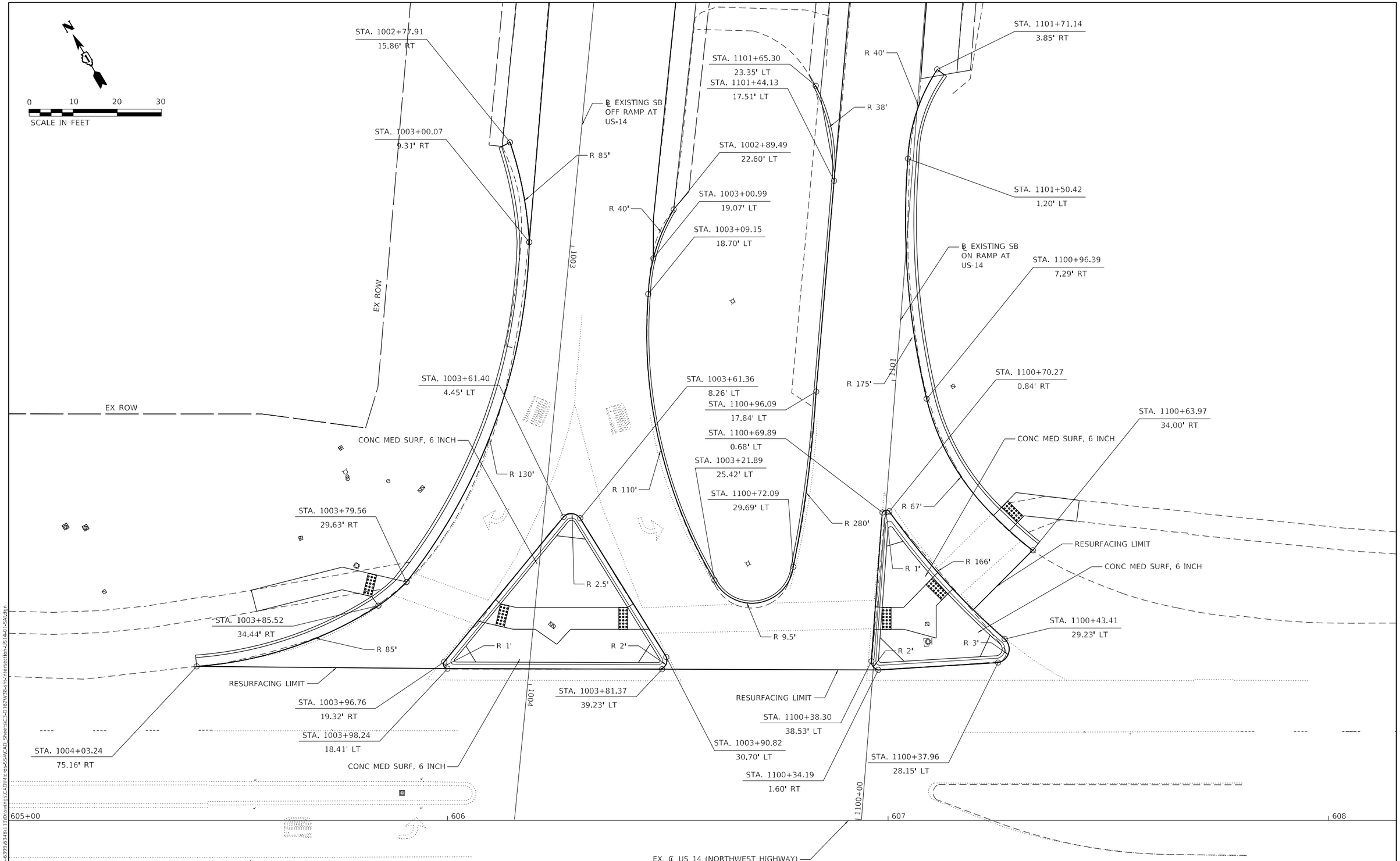

LOCATION: US 14 (NORTHWEST HIGHWAY) & IL ROUTE 53 SB RAMPS

MODEL: Default
FILE NAME: S:\DL\6300-6399\6346113\Drawings\CADd\Micro-SSA\CAD_Sheets\C3-D162W38-int-Intersection-US14-01-SAI.dgn

STRAND ASSOCIATES® 1170 SOUTH HOUBOLT ROAD JOLIET, ILLINOIS 60431 (815) 744-4200	USER NAME = StevenB	DESIGNED - MAG	REVISED -	STATE OF ILLINOIS DEPARTMENT OF TRANSPORTATION	US ROUTE 14 (NORTHWEST HIGHWAY) INTERSECTION DETAIL
		DRAWN - DJW	REVISED -		
	PLOT SCALE = 20.0000 ' / in.	CHECKED - DWG	REVISED -		
	PLOT DATE = 8/23/2024	DATE - 8/23/2024	REVISED -		SCALE: SHEET 1 OF 2 SHEETS STA. TO STA.

F.A.P. RTE.	SECTION	COUNTY	TOTAL SHEETS	SHEET NO.
342	(531) BR 23	COOK	1211	410
		CONTRACT NO. 62W38		
		ILLINOIS	FED. AID PROJECT	

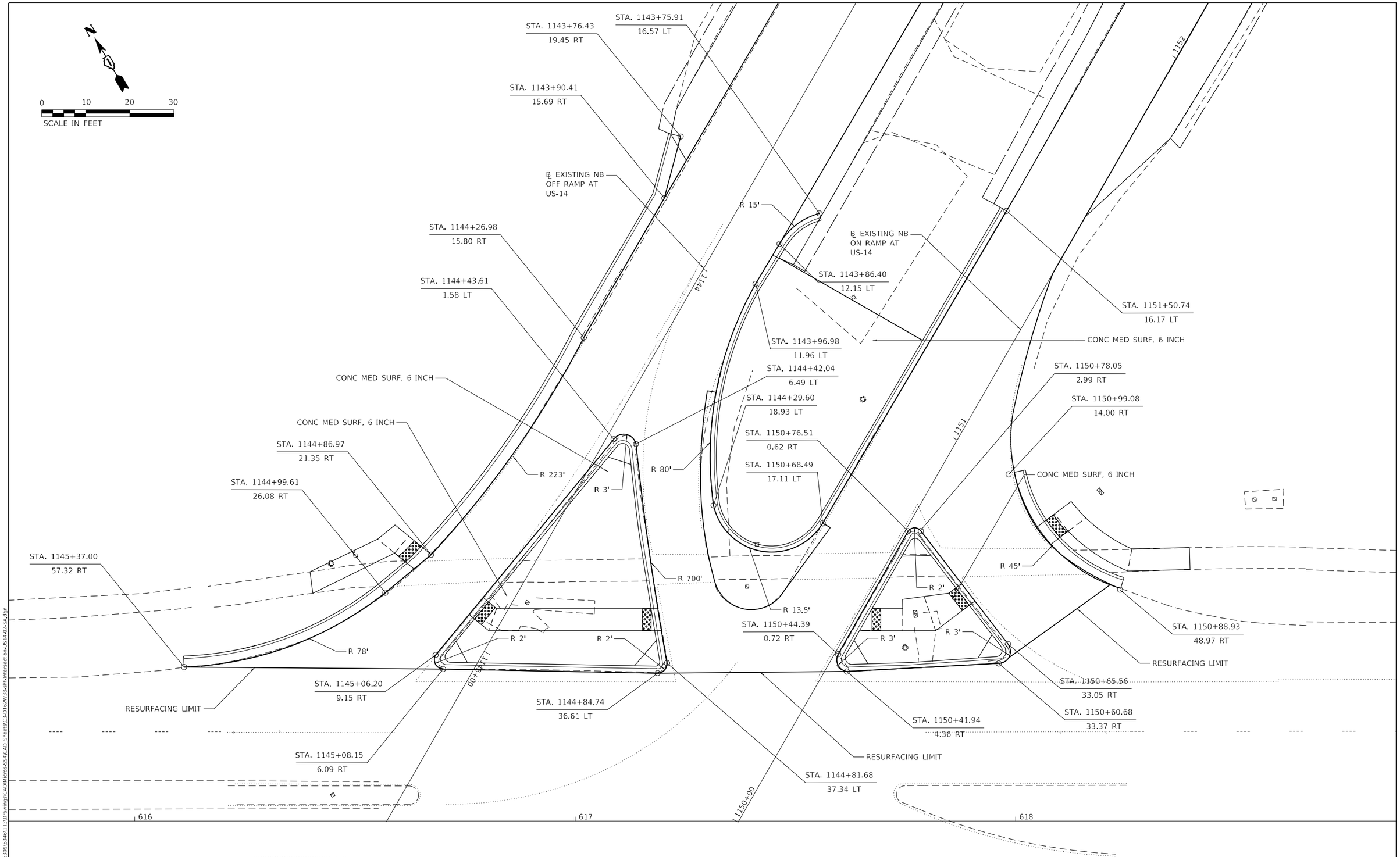

LOCATION: US 14 (NORTHWEST HIGHWAY) & IL ROUTE 53 NB RAMPS

MODEL: Default
FILE NAME: S:\JOL\6300-6399\6346113\Drawings\CAD\Micro-SS4\CAD_Sheets\C3-D162W38-sht-Intersection-US14-02-SA.dgn

STRAND ASSOCIATES® 1170 SOUTH HOUBOLT ROAD JOLIET, ILLINOIS 60431 (815) 744-4200	USER NAME = StevenB	DESIGNED - MAG	REVISED -	STATE OF ILLINOIS DEPARTMENT OF TRANSPORTATION	US ROUTE 14 (NORTHWEST HIGHWAY) INTERSECTION DETAIL
		DRAWN - DJW	REVISED -		
	PLOT SCALE = 20.0000 ' / in.	CHECKED - DWG	REVISED -		
	PLOT DATE = 8/23/2024	DATE - 8/23/2024	REVISED -		SCALE: SHEET 2 OF 2 SHEETS STA. TO STA.

F.A.P. RTE.	SECTION	COUNTY	TOTAL SHEETS	SHEET NO.
342	(531) BR 23	COOK	1211	411
		CONTRACT NO. 62W38		
		ILLINOIS	FED. AID PROJECT	

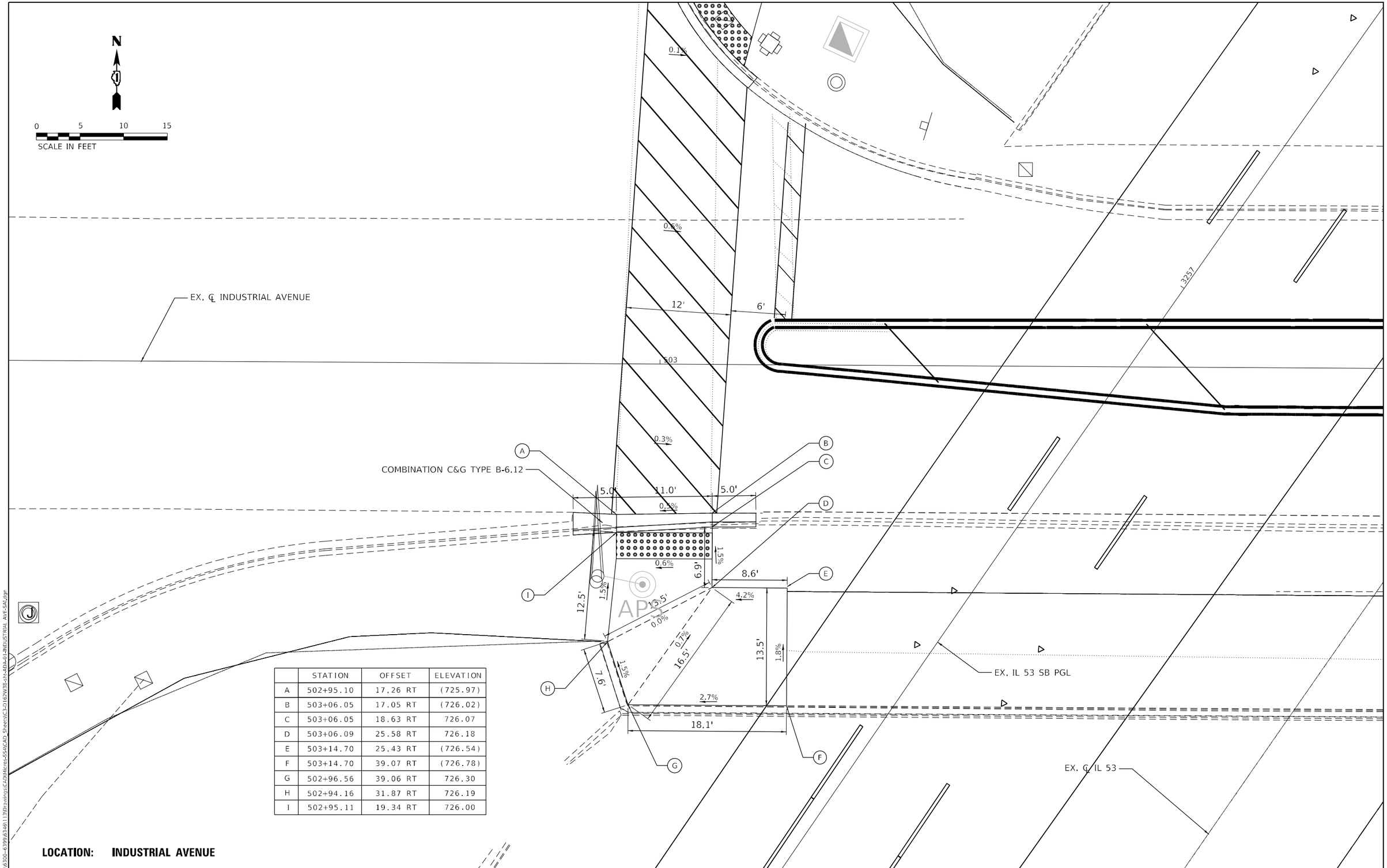

	STATION	OFFSET	ELEVATION
A	502+95.10	17.26 RT	(725.97)
B	503+06.05	17.05 RT	(726.02)
C	503+06.05	18.63 RT	726.07
D	503+06.09	25.58 RT	726.18
E	503+14.70	25.43 RT	(726.54)
F	503+14.70	39.07 RT	(726.78)
G	502+96.56	39.06 RT	726.30
H	502+94.16	31.87 RT	726.19
I	502+95.11	19.34 RT	726.00

LOCATION: INDUSTRIAL AVENUE

MODEL: Default
FILE NAME: S:\JOB\6300-6399\6346\13\Drawings\CADMicro\SSA\CAD Sheets\C3-D162W38-sht-ADA-01-INDUSTRIAL AVE-SAL.dgn

STRAND ASSOCIATES®
1170 SOUTH HOUBOLT ROAD
JOLIET, ILLINOIS 60431
(815) 744-4200

USER NAME = StevenB	DESIGNED - MAG	REVISED -
	DRAWN - DJW	REVISED -
PLOT SCALE = 10.0000 ' / in.	CHECKED - DWG	REVISED -
PLOT DATE = 9/27/2024	DATE - 8/23/2024	REVISED -

STATE OF ILLINOIS
DEPARTMENT OF TRANSPORTATION

INDUSTRIAL AVENUE
CURB RAMP DETAILS

SCALE: 1" = 5' | SHEET 1 OF 2 SHEETS | STA. TO STA.

F.A.P. RTE.	SECTION	COUNTY	TOTAL SHEETS	SHEET NO.
342	(531) BR 23	COOK	1211	412

CONTRACT NO. 62W38

ILLINOIS | FED. AID PROJECT

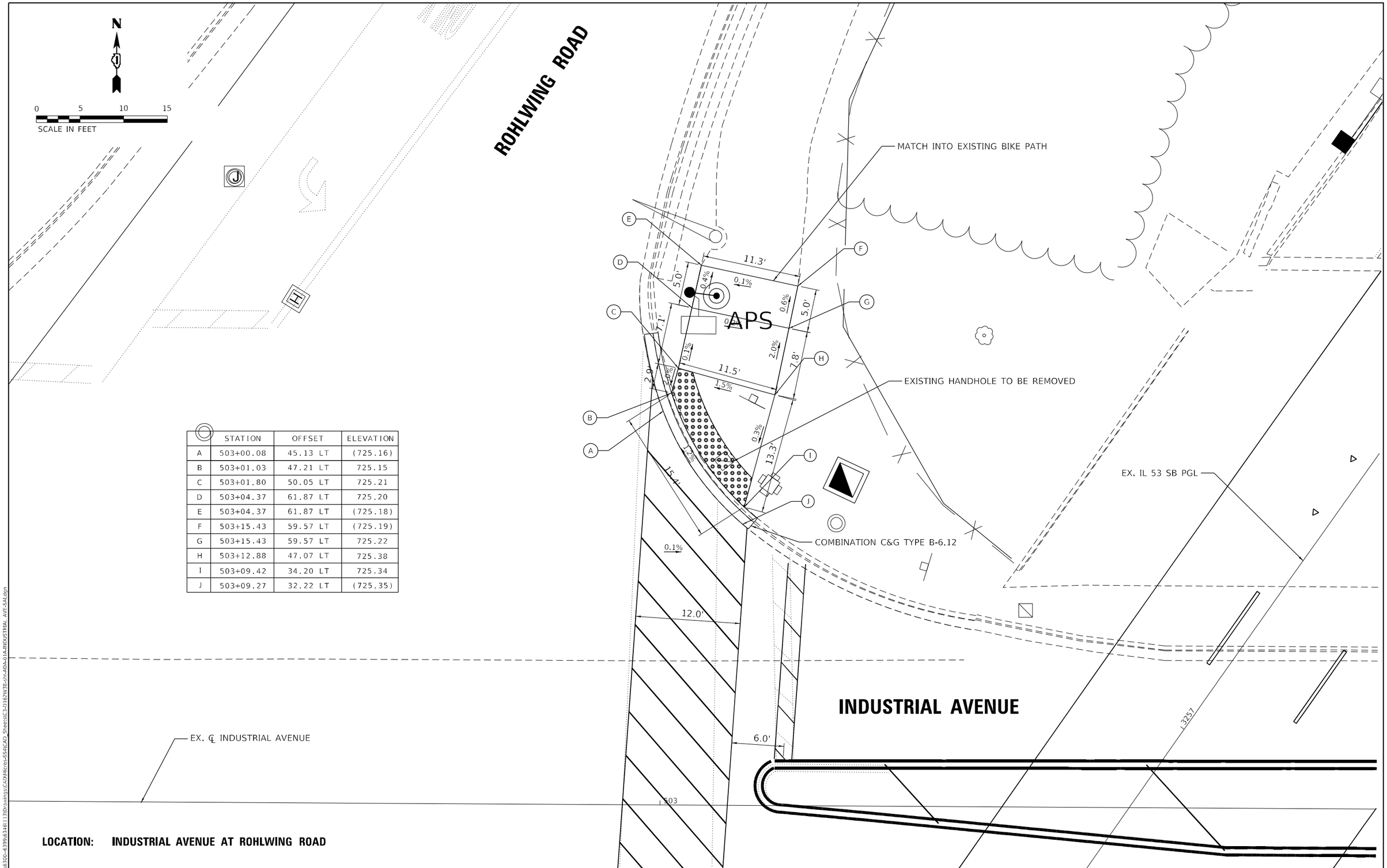

	STATION	OFFSET	ELEVATION
A	503+00.08	45.13 LT	(725.16)
B	503+01.03	47.21 LT	725.15
C	503+01.80	50.05 LT	725.21
D	503+04.37	61.87 LT	725.20
E	503+04.37	61.87 LT	(725.18)
F	503+15.43	59.57 LT	(725.19)
G	503+15.43	59.57 LT	725.22
H	503+12.88	47.07 LT	725.38
I	503+09.42	34.20 LT	725.34
J	503+09.27	32.22 LT	(725.35)

LOCATION: INDUSTRIAL AVENUE AT ROHLWING ROAD

MODEL: Default
FILE NAME: S:\JOL\6300-6399\6346113\Drawings\CAD\Micro-SSA\CAD_Sheets\C3-0162W38-sh-ADA-01A-INDUSTRIAL_AVE-SA.dgn

STRAND ASSOCIATES®
1170 SOUTH HOUBOLT ROAD
JOLIET, ILLINOIS 60431
(815) 744-4200

USER NAME = StevenB	DESIGNED - MAG	REVISED -	
	DRAWN - DJW	REVISED -	
PLOT SCALE = 10.0000 ' / in.	CHECKED - DWG	REVISED -	
PLOT DATE = 9/27/2024	DATE - 8/23/2024	REVISED -	

STATE OF ILLINOIS
DEPARTMENT OF TRANSPORTATION

INDUSTRIAL AVENUE
CURB RAMP DETAILS

SCALE: 1" = 5' | SHEET 1 OF 2 SHEETS | STA. TO STA.

F.A.P. RTE.	SECTION	COUNTY	TOTAL SHEETS	SHEET NO.
342	(531) BR 23	COOK	1211	413
		CONTRACT NO. 62W38		
		ILLINOIS FED. AID PROJECT		

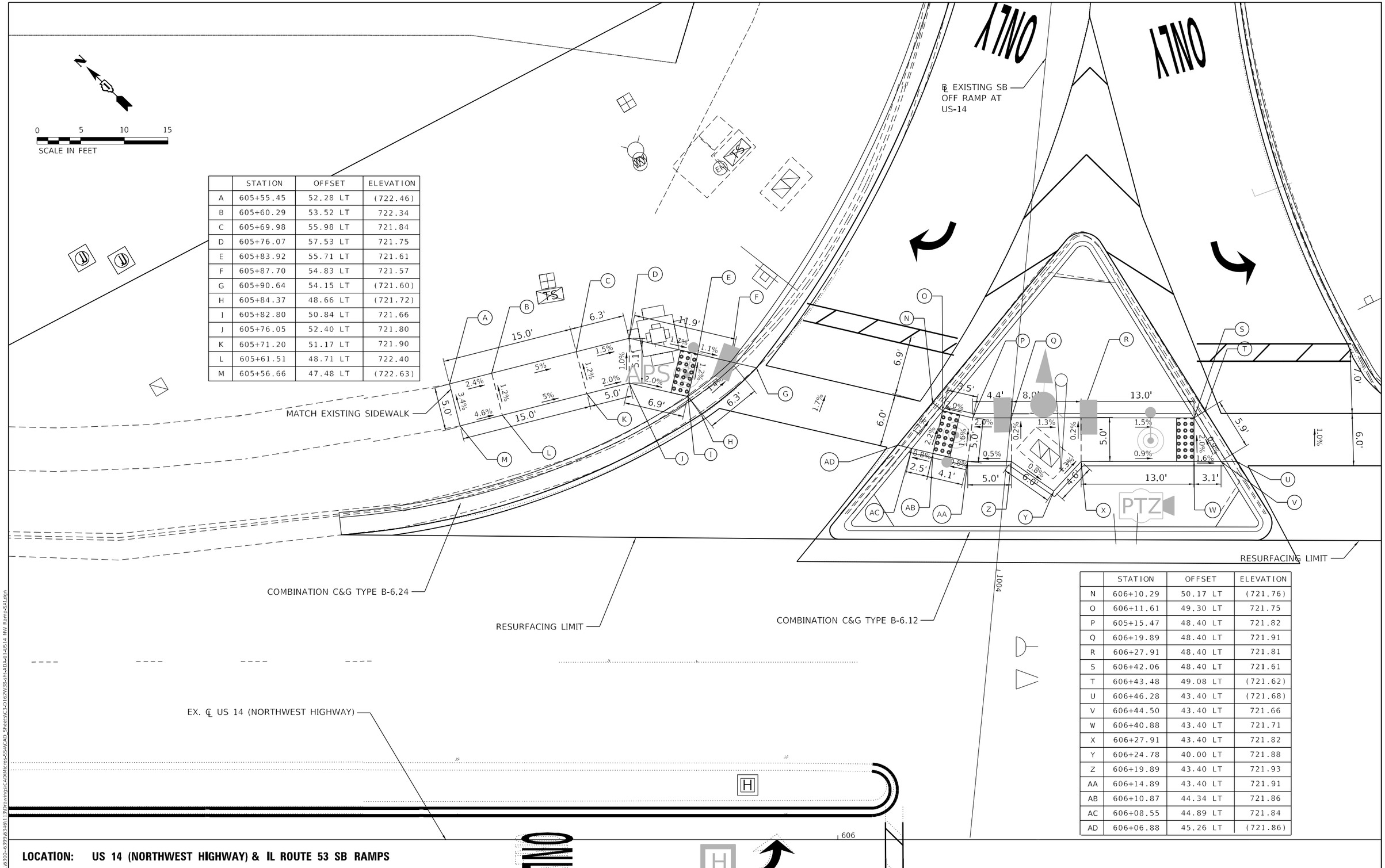

	STATION	OFFSET	ELEVATION
A	605+55.45	52.28 LT	(722.46)
B	605+60.29	53.52 LT	722.34
C	605+69.98	55.98 LT	721.84
D	605+76.07	57.53 LT	721.75
E	605+83.92	55.71 LT	721.61
F	605+87.70	54.83 LT	721.57
G	605+90.64	54.15 LT	(721.60)
H	605+84.37	48.66 LT	(721.72)
I	605+82.80	50.84 LT	721.66
J	605+76.05	52.40 LT	721.80
K	605+71.20	51.17 LT	721.90
L	605+61.51	48.71 LT	722.40
M	605+56.66	47.48 LT	(722.63)

	STATION	OFFSET	ELEVATION
N	606+10.29	50.17 LT	(721.76)
O	606+11.61	49.30 LT	721.75
P	605+15.47	48.40 LT	721.82
Q	606+19.89	48.40 LT	721.91
R	606+27.91	48.40 LT	721.81
S	606+42.06	48.40 LT	721.61
T	606+43.48	49.08 LT	(721.62)
U	606+46.28	43.40 LT	(721.68)
V	606+44.50	43.40 LT	721.66
W	606+40.88	43.40 LT	721.71
X	606+27.91	43.40 LT	721.82
Y	606+24.78	40.00 LT	721.88
Z	606+19.89	43.40 LT	721.93
AA	606+14.89	43.40 LT	721.91
AB	606+10.87	44.34 LT	721.86
AC	606+08.55	44.89 LT	721.84
AD	606+06.88	45.26 LT	(721.86)

LOCATION: US 14 (NORTHWEST HIGHWAY) & IL ROUTE 53 SB RAMPS

MODEL: Default
FILE NAME: S:\DOI\6300-6399\6346113\Drawings\CADMicro-SS4\CAD_Sheets\C3-D182W38-Ith-ADA-01-US14 NW Ramp-S4.dgn

STRAND ASSOCIATES
1170 SOUTH HOUBOLT ROAD
JOLIET, ILLINOIS 60431
(815) 744-4200

USER NAME = StevenB	DESIGNED - MAG	REVISED -	
	DRAWN - DJW	REVISED -	
PLOT SCALE = 10.0000 ' / in.	CHECKED - DWG	REVISED -	
PLOT DATE = 9/27/2024	DATE - 8/23/2024	REVISED -	

STATE OF ILLINOIS
DEPARTMENT OF TRANSPORTATION

US ROUTE 14 (NORTHWEST HIGHWAY)
CURB RAMP DETAILS

SCALE: 1" = 5' | SHEET 1 OF 4 SHEETS | STA. TO STA.

F.A.P. RTE.	SECTION	COUNTY	TOTAL SHEETS	SHEET NO.
342	(531) BR 23	COOK	1211	414

CONTRACT NO. 62W38

ILLINOIS | FED. AID PROJECT

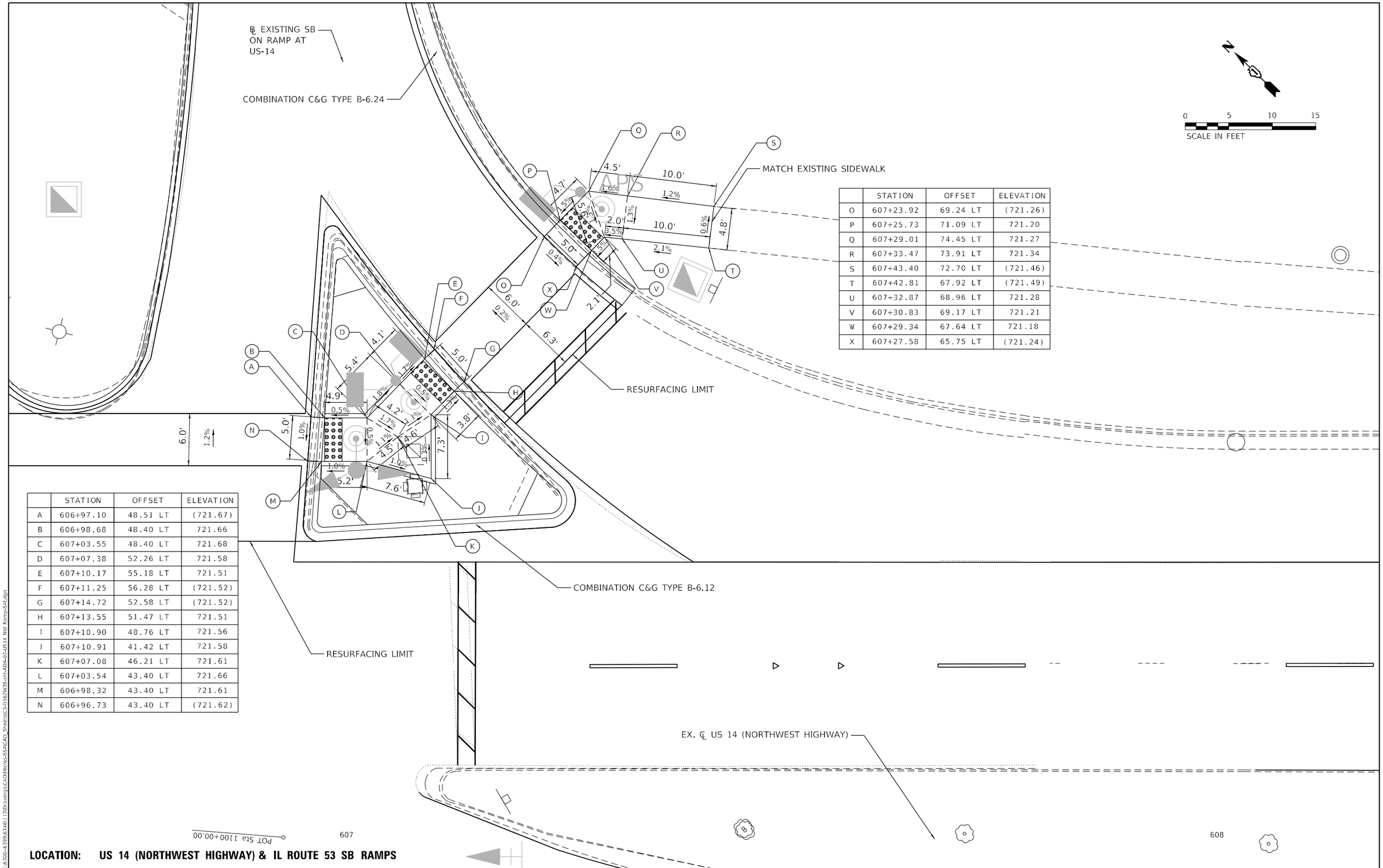

	STATION	OFFSET	ELEVATION
O	607+23.92	69.24 LT	(721.26)
P	607+25.73	71.09 LT	721.20
Q	607+29.01	74.45 LT	721.27
R	607+33.47	73.91 LT	721.34
S	607+43.40	72.70 LT	(721.46)
T	607+42.81	67.92 LT	(721.49)
U	607+32.87	68.96 LT	721.28
V	607+30.83	69.17 LT	721.21
W	607+29.34	67.64 LT	721.18
X	607+27.58	65.75 LT	(721.24)

	STATION	OFFSET	ELEVATION
A	606+97.10	48.51 LT	(721.67)
B	606+98.68	48.40 LT	721.66
C	607+03.55	48.40 LT	721.68
D	607+07.38	52.26 LT	721.58
E	607+10.17	55.18 LT	721.51
F	607+11.25	56.28 LT	(721.52)
G	607+14.72	52.58 LT	(721.52)
H	607+13.55	51.47 LT	721.51
I	607+10.90	48.76 LT	721.56
J	607+10.91	41.42 LT	721.58
K	607+07.08	46.21 LT	721.61
L	607+03.54	43.40 LT	721.66
M	606+98.32	43.40 LT	721.61
N	606+96.73	43.40 LT	(721.62)

LOCATION: US 14 (NORTHWEST HIGHWAY) & IL ROUTE 53 SB RAMPS

MODEL: Default
FILE NAME: S:\0\6300-6399\6348113\Drawings\CADMicro-SSA\CAD_Sheets\C3-D162W38-alt-ADA-02-US14 NW Ramp-S4.dgn

STRAND ASSOCIATES®
1170 SOUTH HOUBOLT ROAD
JOLIET, ILLINOIS 60431
(815) 744-4200

USER NAME = StevenB	DESIGNED - MAG	REVISED -	
	DRAWN - DJW	REVISED -	
PLOT SCALE = 10.0000 ' / in.	CHECKED - DWG	REVISED -	
PLOT DATE = 8/23/2024	DATE - 8/23/2024	REVISED -	

STATE OF ILLINOIS
DEPARTMENT OF TRANSPORTATION

US ROUTE 14 (NORTHWEST HIGHWAY)
CURB RAMP DETAILS

SCALE: 1" = 5' | SHEET 2 OF 4 SHEETS | STA. TO STA.

F.A.P. RTE.	SECTION	COUNTY	TOTAL SHEETS	SHEET NO.
342	(531) BR 23	COOK	1211	415
		CONTRACT NO. 62W38		
		ILLINOIS	FED. AID PROJECT	

	STATION	OFFSET	ELEVATION
A	616+39.81	56.61 LT	(719.45)
B	616+51.25	62.14 LT	719.25
C	616+55.12	64.03 LT	719.20
D	616+59.11	67.26 LT	719.15
E	616+62.23	64.70 LT	719.10
F	616+65.03	62.38 LT	719.01
G	616+67.32	60.49 LT	(719.07)
H	616+63.40	57.24 LT	(719.06)
I	616+61.44	58.86 LT	719.00
J	616+59.02	60.85 LT	719.14
K	616+53.19	57.98 LT	719.19
L	616+40.47	51.73 LT	(719.50)

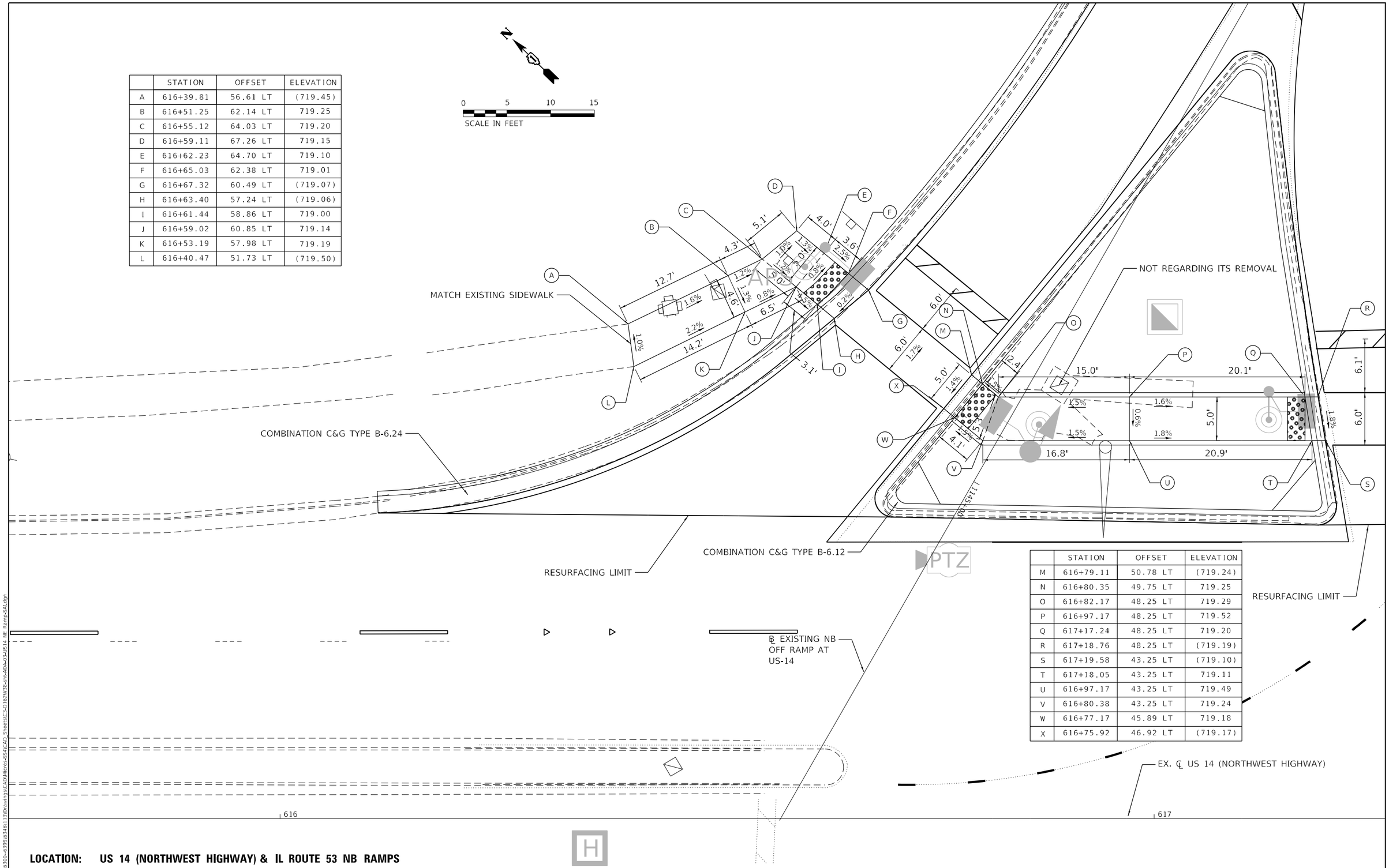

	STATION	OFFSET	ELEVATION
M	616+79.11	50.78 LT	(719.24)
N	616+80.35	49.75 LT	719.25
O	616+82.17	48.25 LT	719.29
P	616+97.17	48.25 LT	719.52
Q	617+17.24	48.25 LT	719.20
R	617+18.76	48.25 LT	(719.19)
S	617+19.58	43.25 LT	(719.10)
T	617+18.05	43.25 LT	719.11
U	616+97.17	43.25 LT	719.49
V	616+80.38	43.25 LT	719.24
W	616+77.17	45.89 LT	719.18
X	616+75.92	46.92 LT	(719.17)

LOCATION: US 14 (NORTHWEST HIGHWAY) & IL ROUTE 53 NB RAMPS

MODEL: Default
FILE NAME: S:\0_0300-6399\6346\13\Drawings\CADMicro-SSA\CAD_Sheets\C3-0162W38-sht-ADA-03-JS14_NE Ramp-SAL.dgn

STRAND ASSOCIATES®
1170 SOUTH HOUBOLT ROAD
JOLIET, ILLINOIS 60431
(815) 744-4200

USER NAME = StevenB	DESIGNED - MAG	REVISED -	
	DRAWN - DJW	REVISED -	
PLOT SCALE = 10.0000 ' / in.	CHECKED - DWG	REVISED -	
PLOT DATE = 9/27/2024	DATE - 8/23/2024	REVISED -	

STATE OF ILLINOIS
DEPARTMENT OF TRANSPORTATION

US ROUTE 14 (NORTHWEST HIGHWAY)
CURB RAMP DETAILS

SCALE: 1" = 5' | SHEET 3 OF 4 SHEETS | STA. TO STA.

F.A.P. RTE.	SECTION	COUNTY	TOTAL SHEETS	SHEET NO.
342	(531) BR 23	COOK	1211	416
		CONTRACT NO. 62W38		
		ILLINOIS	FED. AID PROJECT	

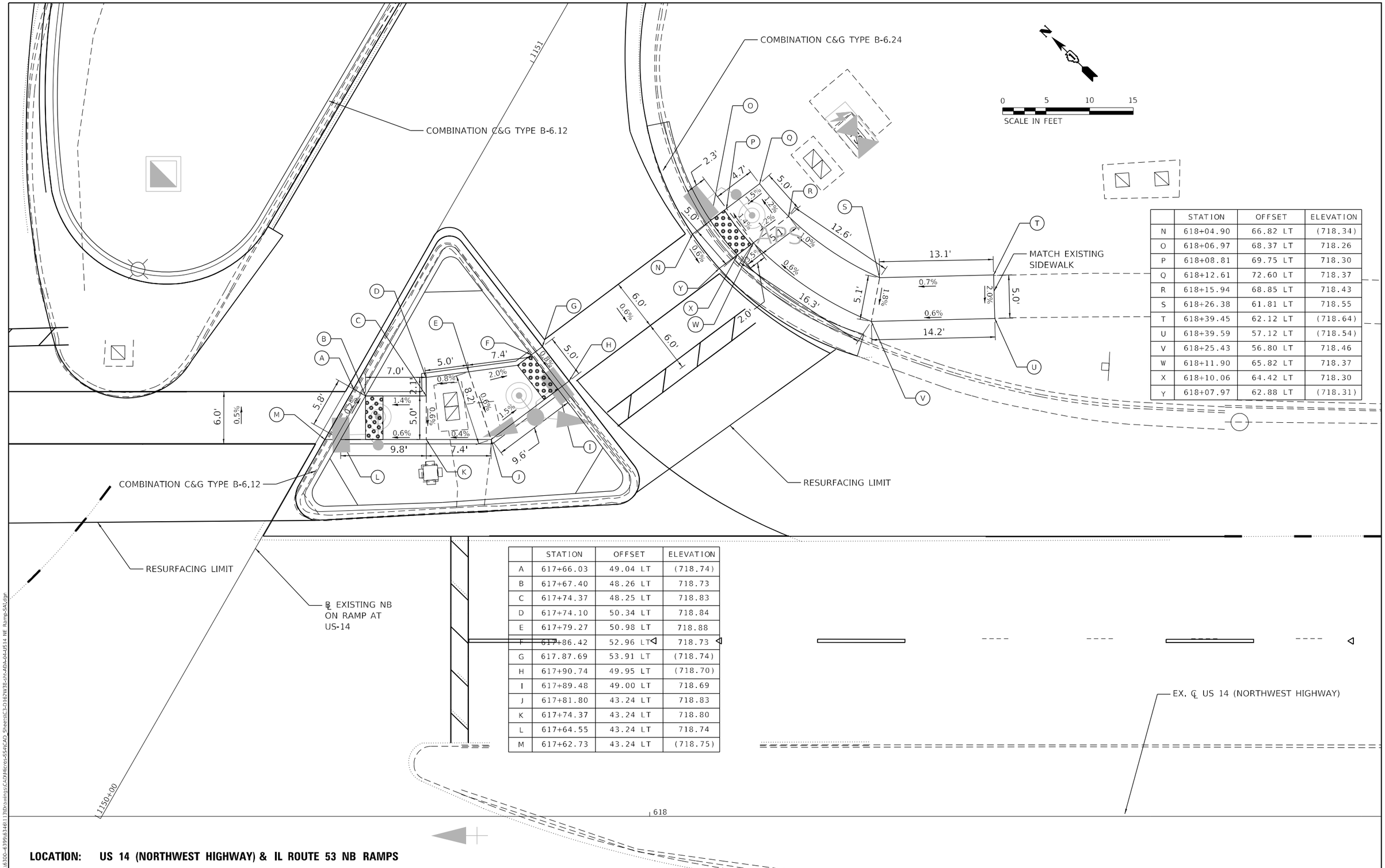

	STATION	OFFSET	ELEVATION
N	618+04.90	66.82 LT	(718.34)
O	618+06.97	68.37 LT	718.26
P	618+08.81	69.75 LT	718.30
Q	618+12.61	72.60 LT	718.37
R	618+15.94	68.85 LT	718.43
S	618+26.38	61.81 LT	718.55
T	618+39.45	62.12 LT	(718.64)
U	618+39.59	57.12 LT	(718.54)
V	618+25.43	56.80 LT	718.46
W	618+11.90	65.82 LT	718.37
X	618+10.06	64.42 LT	718.30
Y	618+07.97	62.88 LT	(718.31)

	STATION	OFFSET	ELEVATION
A	617+66.03	49.04 LT	(718.74)
B	617+67.40	48.26 LT	718.73
C	617+74.37	48.25 LT	718.83
D	617+74.10	50.34 LT	718.84
E	617+79.27	50.98 LT	718.88
F	617+86.42	52.96 LT	718.73
G	617.87.69	53.91 LT	(718.74)
H	617+90.74	49.95 LT	(718.70)
I	617+89.48	49.00 LT	718.69
J	617+81.80	43.24 LT	718.83
K	617+74.37	43.24 LT	718.80
L	617+64.55	43.24 LT	718.74
M	617+62.73	43.24 LT	(718.75)

LOCATION: US 14 (NORTHWEST HIGHWAY) & IL ROUTE 53 NB RAMPS

MODEL: Default
FILE NAME: S:\0_\6300-6399\6346\13\Drawings\CAD\Micros-SSA\CAD Sheets\C3-5162W38-sht-ADA-04-US14 NE Ramp-SA.dgn

STRAND ASSOCIATES®
1170 SOUTH HOUBOLT ROAD
JOLIET, ILLINOIS 60431
(815) 744-4200

USER NAME = StevenB	DESIGNED - MAG	REVISED -	
	DRAWN - DJW	REVISED -	
PLOT SCALE = 10.0000 ' / in.	CHECKED - DWG	REVISED -	
PLOT DATE = 9/27/2024	DATE - 8/23/2024	REVISED -	

STATE OF ILLINOIS
DEPARTMENT OF TRANSPORTATION

US ROUTE 14 (NORTHWEST HIGHWAY)
CURB RAMP DETAILS

SCALE: 1" = 5' | SHEET 4 OF 4 SHEETS | STA. TO STA.

F.A.P. RTE.	SECTION	COUNTY	TOTAL SHEETS	SHEET NO.
342	(531) BR 23	COOK	1211	417
		CONTRACT NO. 62W38		
		ILLINOIS FED. AID PROJECT		

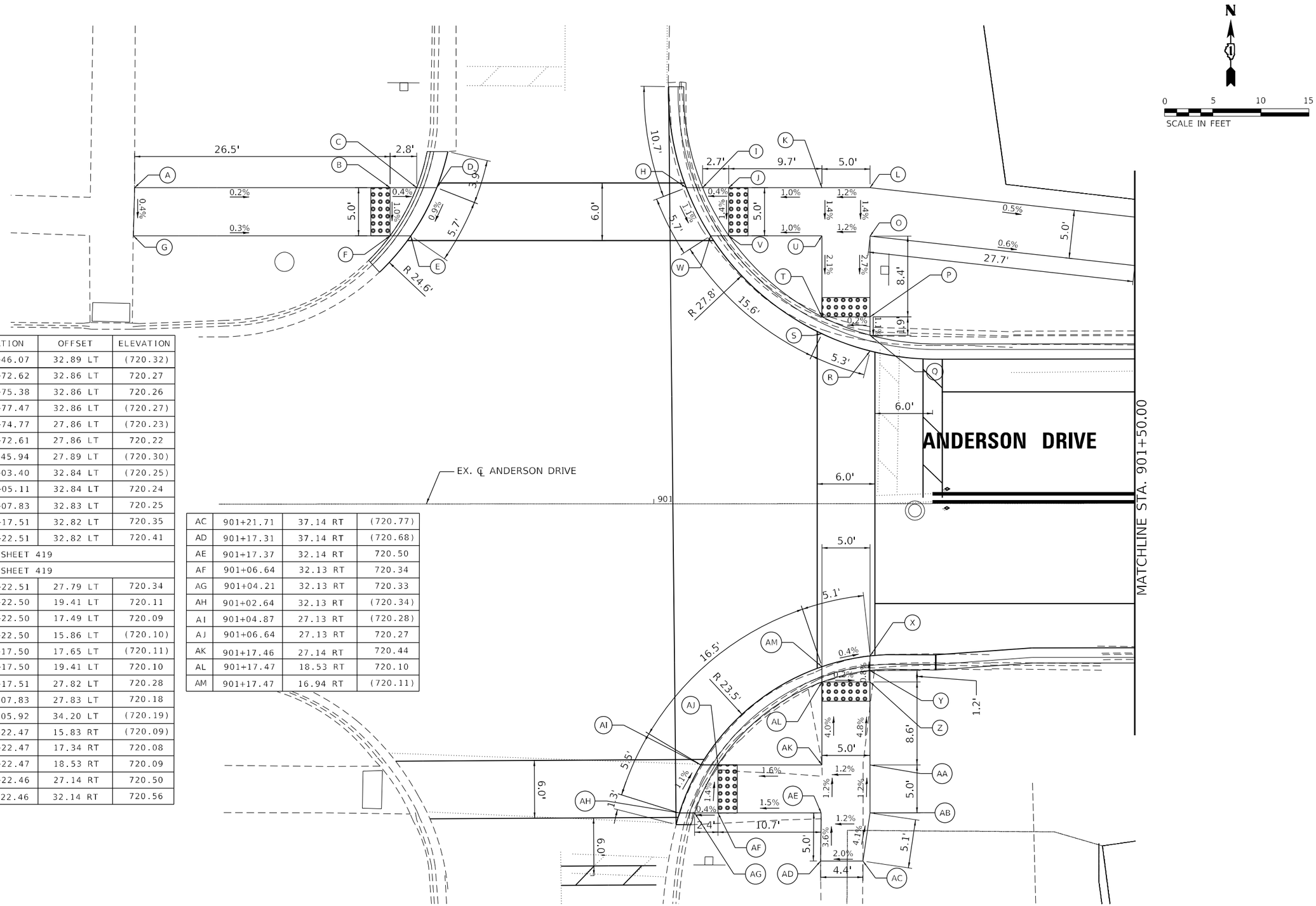

	STATION	OFFSET	ELEVATION
A	900+46.07	32.89 LT	(720.32)
B	900+72.62	32.86 LT	720.27
C	900+75.38	32.86 LT	720.26
D	900+77.47	32.86 LT	(720.27)
E	900+74.77	27.86 LT	(720.23)
F	900+72.61	27.86 LT	720.22
G	900+45.94	27.89 LT	(720.30)
H	901+03.40	32.84 LT	(720.25)
I	901+05.11	32.84 LT	720.24
J	901+07.83	32.83 LT	720.25
K	901+17.51	32.82 LT	720.35
L	901+22.51	32.82 LT	720.41
M	SEE SHEET 419		
N	SEE SHEET 419		
O	901+22.51	27.79 LT	720.34
P	901+22.50	19.41 LT	720.11
Q	901+22.50	17.49 LT	720.09
R	901+22.50	15.86 LT	(720.10)
S	901+17.50	17.65 LT	(720.11)
T	901+17.50	19.41 LT	720.10
U	901+17.51	27.82 LT	720.28
V	901+07.83	27.83 LT	720.18
W	901+05.92	34.20 LT	(720.19)
X	901+22.47	15.83 RT	(720.09)
Y	901+22.47	17.34 RT	720.08
Z	901+22.47	18.53 RT	720.09
AA	901+22.46	27.14 RT	720.50
AB	901+22.46	32.14 RT	720.56

AC	901+21.71	37.14 RT	(720.77)
AD	901+17.31	37.14 RT	(720.68)
AE	901+17.37	32.14 RT	720.50
AF	901+06.64	32.13 RT	720.34
AG	901+04.21	32.13 RT	720.33
AH	901+02.64	32.13 RT	(720.34)
AI	901+04.87	27.13 RT	(720.28)
AJ	901+06.64	27.13 RT	720.27
AK	901+17.46	27.14 RT	720.44
AL	901+17.47	18.53 RT	720.10
AM	901+17.47	16.94 RT	(720.11)

MODEL: Default
FILE NAME: S:\JO\6300-6399\6346\13\Drawings\CAD\Micro-SSA\CAD_Sheets\C3-D162W38-sht-ADA-03-Anderson-SAL.dgn

STRAND ASSOCIATES®
1170 SOUTH HOUBOLT ROAD
JOLIET, ILLINOIS 60431
(815) 744-4200

USER NAME = StevenB	DESIGNED - MAG	REVISED -	
	DRAWN - DJW	REVISED -	
PLOT SCALE = 10.0000 ' / in.	CHECKED - DWG	REVISED -	
PLOT DATE = 9/27/2024	DATE - 8/23/2024	REVISED -	

STATE OF ILLINOIS
DEPARTMENT OF TRANSPORTATION

ANDERSON DRIVE
CURB RAMP DETAILS

SCALE: 1" = 5' | SHEET 1 OF 3 SHEETS | STA. | TO STA.

F.A.P. RTE.	SECTION	COUNTY	TOTAL SHEETS	SHEET NO.
342	(531) BR 23	COOK	1211	418
		CONTRACT NO. 62W38		
		ILLINOIS	FED. AID PROJECT	

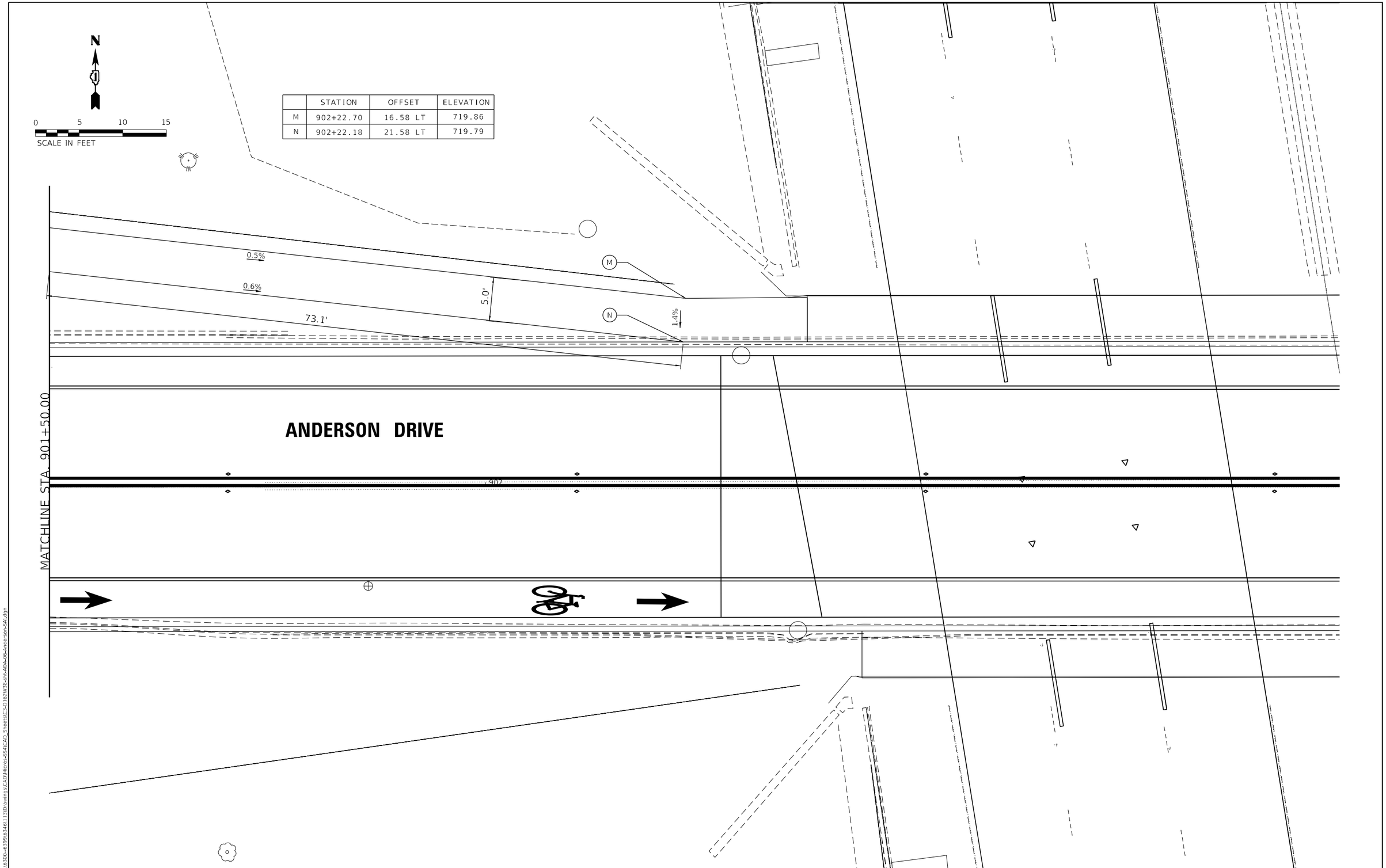

	STATION	OFFSET	ELEVATION
M	902+22.70	16.58 LT	719.86
N	902+22.18	21.58 LT	719.79

MODEL: Default
FILE NAME: S:\JOL\6300-6399\6346113\Drawings\CADMicro\SSA\CAD_Sheets\C3-D162W38-sht-ADA-06-Anderson-SA.dgn

STRAND ASSOCIATES®
1170 SOUTH HOUBOLT ROAD
JOLIET, ILLINOIS 60431
(815) 744-4200

USER NAME = StevenB	DESIGNED - MAG	REVISED -	
418	DRAWN - DJW	REVISED -	
PLOT SCALE = 10.0000 ' / in.	CHECKED - DWG	REVISED -	
PLOT DATE = 8/23/2024	DATE - 8/23/2024	REVISED -	

STATE OF ILLINOIS
DEPARTMENT OF TRANSPORTATION

ANDERSON DRIVE
CURB RAMP DETAILS

SCALE: 1" = 5' | SHEET 2 OF 3 SHEETS | STA. TO STA.

F.A.P. RTE.	SECTION	COUNTY	TOTAL SHEETS	SHEET NO.
342	(531) BR 23	COOK	1211	419

CONTRACT NO. 62W38

ILLINOIS | FED. AID PROJECT

	STATION	OFFSET	ELEVATION
A	904+60.06	44.48 LT	(721.61)
B	904+64.79	46.10 LT	721.22
C	904+61.10	66.46 LT	720.22
D	904+56.36	80.57 LT	(720.05)
E	904+60.91	82.15 LT	(719.94)
F	904+65.75	67.91 LT	720.16
G	904+69.52	47.73 LT	721.16
H	904+71.22	43.03 LT	721.18
I	904+80.17	25.41 LT	(720.28)
J	904+75.54	23.82 LT	(720.28)
K	904+66.49	41.40 LT	721.24
L	904+61.76	39.77 LT	(721.63)
M	904+30.05	34.14 LT	(721.34)
N	904+28.26	33.52 LT	721.33
O	904+23.86	32.01 LT	721.40
P	903+93.55	21.57 LT	720.46
Q	903+94.43	32.01 LT	720.39
R	904+25.49	27.28 LT	721.37
S	904+27.78	28.07 LT	(721.38)

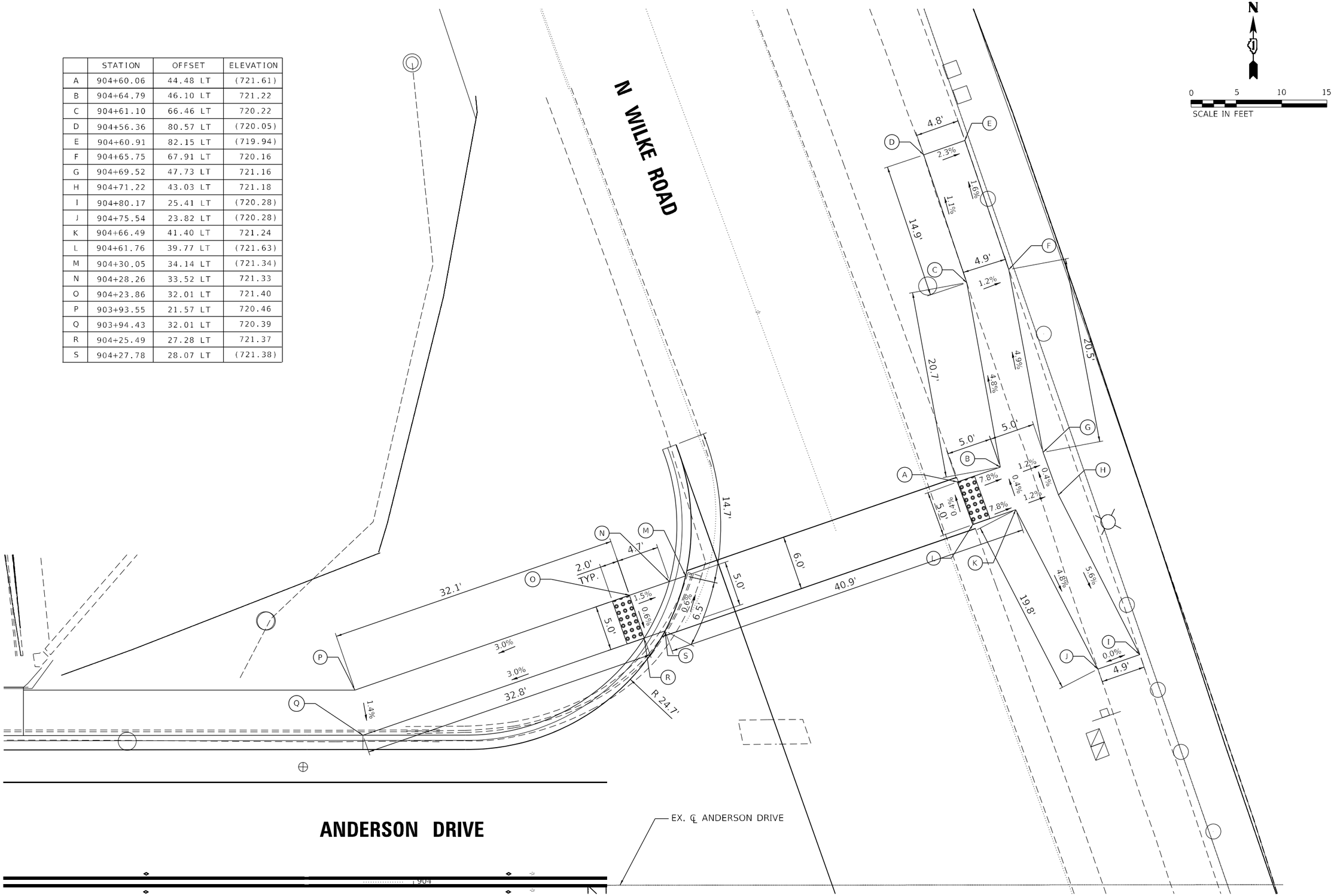

MODEL: Default
FILE NAME: S:\JOL\6300-6399\63461\13D\Drawings\CAD\Micro-SS\CAD_Sheets\C3-D162W38-sh-AD-07-anderson-SA.dgn

STRAND ASSOCIATES®
1170 SOUTH HOUBOLT ROAD
JOLIET, ILLINOIS 60431
(815) 744-4200

USER NAME = StevenB	DESIGNED - MAG	REVISED -
	DRAWN - DJW	REVISED -
PLOT SCALE = 10.0000 ' / in.	CHECKED - DWG	REVISED -
PLOT DATE = 9/27/2024	DATE - 8/23/2024	REVISED -

STATE OF ILLINOIS
DEPARTMENT OF TRANSPORTATION

ANDERSON DRIVE
CURB RAMP DETAILS

SCALE: 1" = 5' | SHEET 3 OF 3 SHEETS | STA. TO STA.

F.A.P. RTE.	SECTION	COUNTY	TOTAL SHEETS	SHEET NO.
342	(531) BR 23	COOK	1211	420
		CONTRACT NO. 62W38		
		ILLINOIS	FED. AID PROJECT	

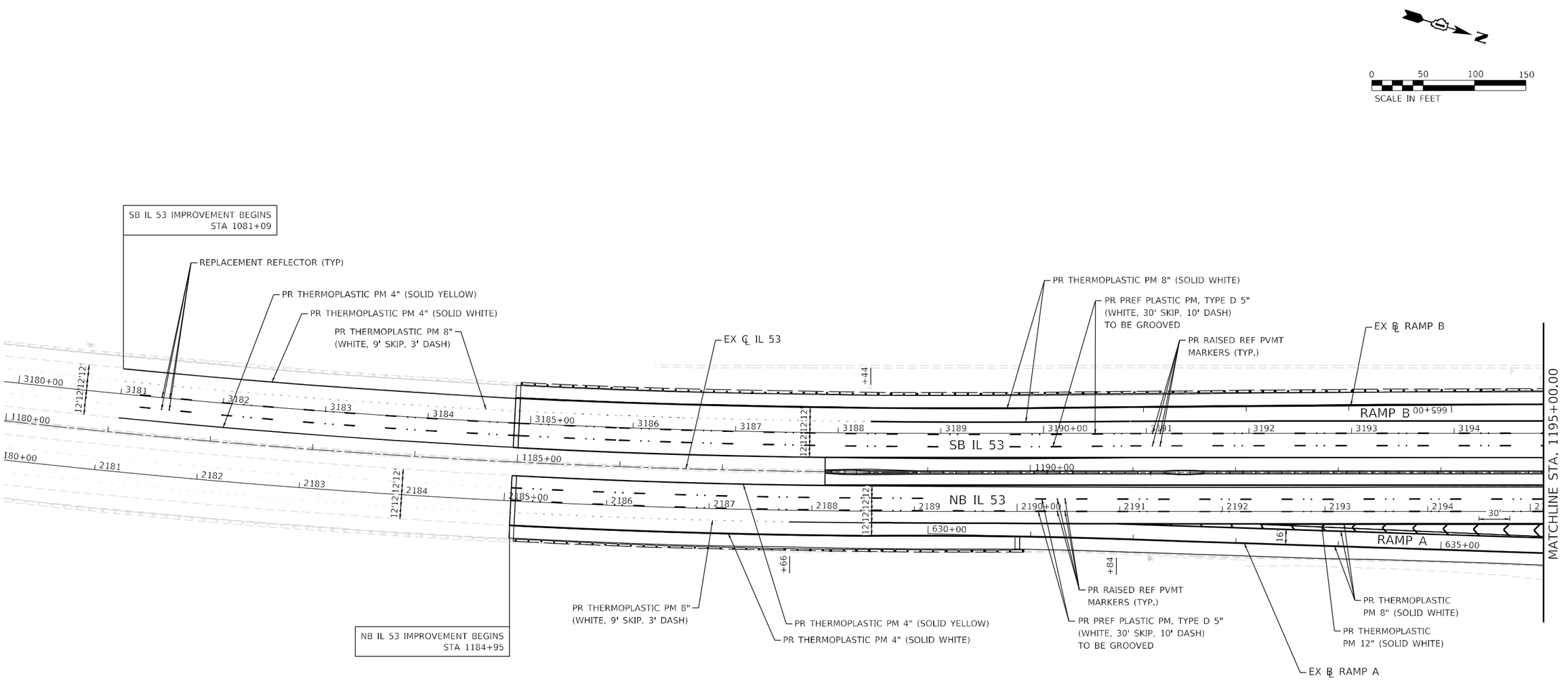

LIN ENGINEERING,LTD. Consulting Engineers Westmont, Illinois	USER NAME = jkenn	DESIGNED - JK	REVISED -	STATE OF ILLINOIS DEPARTMENT OF TRANSPORTATION	IL 53 PAVEMENT MARKING PLAN	F.A.P. RTE.	SECTION	COUNTY	TOTAL SHEETS	SHEET NO.
		DRAWN - JK	REVISED -			342	(531) BR23	COOK	1211	421
	PLOT SCALE = 100.0000 ' / in.	CHECKED - ST	REVISED -					CONTRACT NO. 62W38		
	PLOT DATE = 8/22/2024	DATE - 08/2024	REVISED -		SCALE: 1"=50' SHEET 1 OF 22 SHEETS STA. 1081+09.00 TO STA. 1195+00.00			ILLINOIS FED. AID PROJECT		

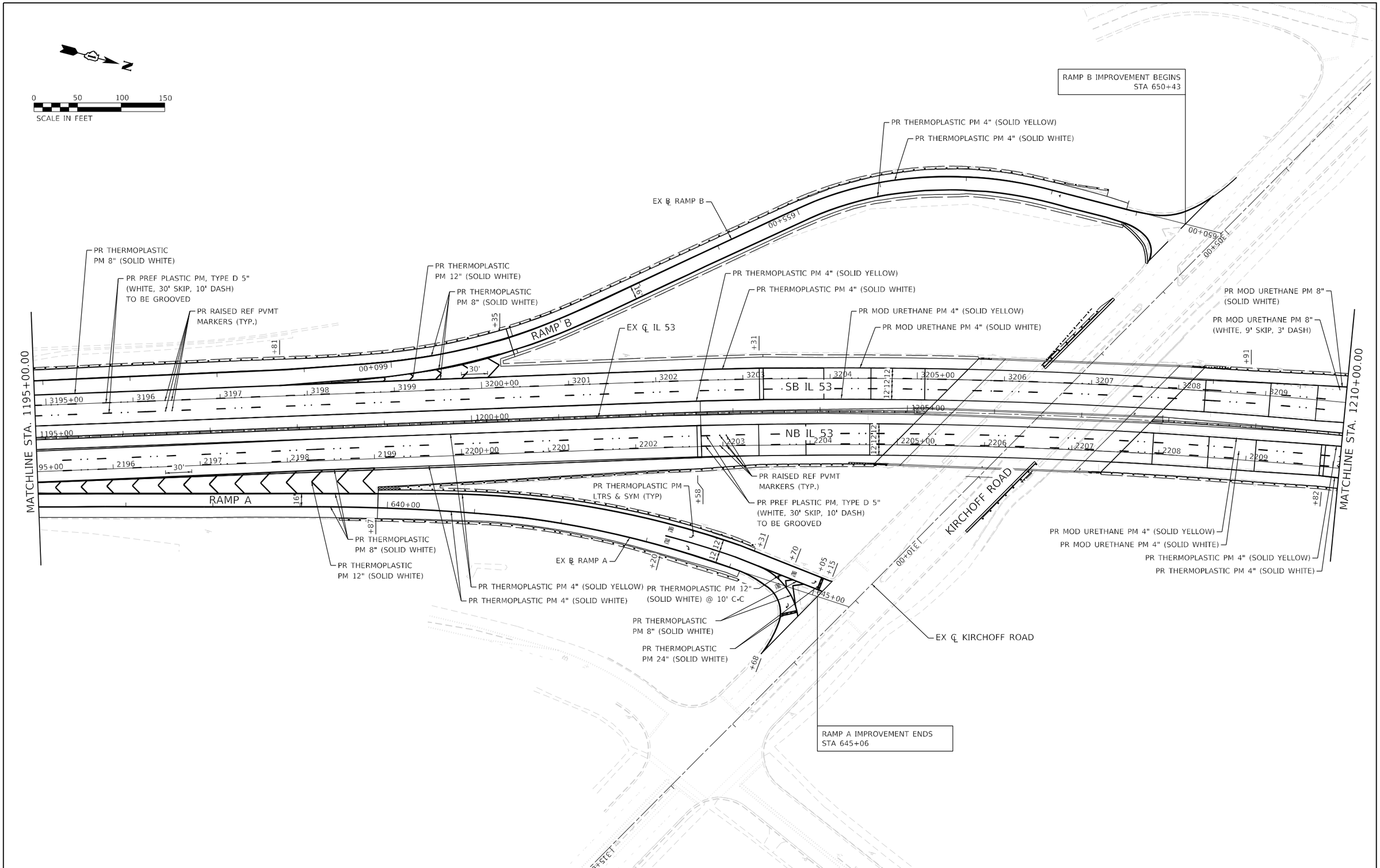

LIN ENGINEERING,LTD. Consulting Engineers Westmont, Illinois	USER NAME = jkeinn	DESIGNED - JK	REVISED -	STATE OF ILLINOIS DEPARTMENT OF TRANSPORTATION	IL 53 PAVEMENT MARKING PLAN	F.A.P. RTE.	SECTION	COUNTY	TOTAL SHEETS	SHEET NO.
		DRAWN - JK	REVISED -			342	(531) BR23	COOK	1211	422
	PLOT SCALE = 100.0000 ' / in.	CHECKED - ST	REVISED -			CONTRACT NO. 62W38				
	PLOT DATE = 8/22/2024	DATE - 08/2024	REVISED -		SCALE: 1"=50' SHEET 2 OF 22 SHEETS STA. 1195+00.00 TO STA. 1210+00.00	ILLINOIS	FED. AID PROJECT			

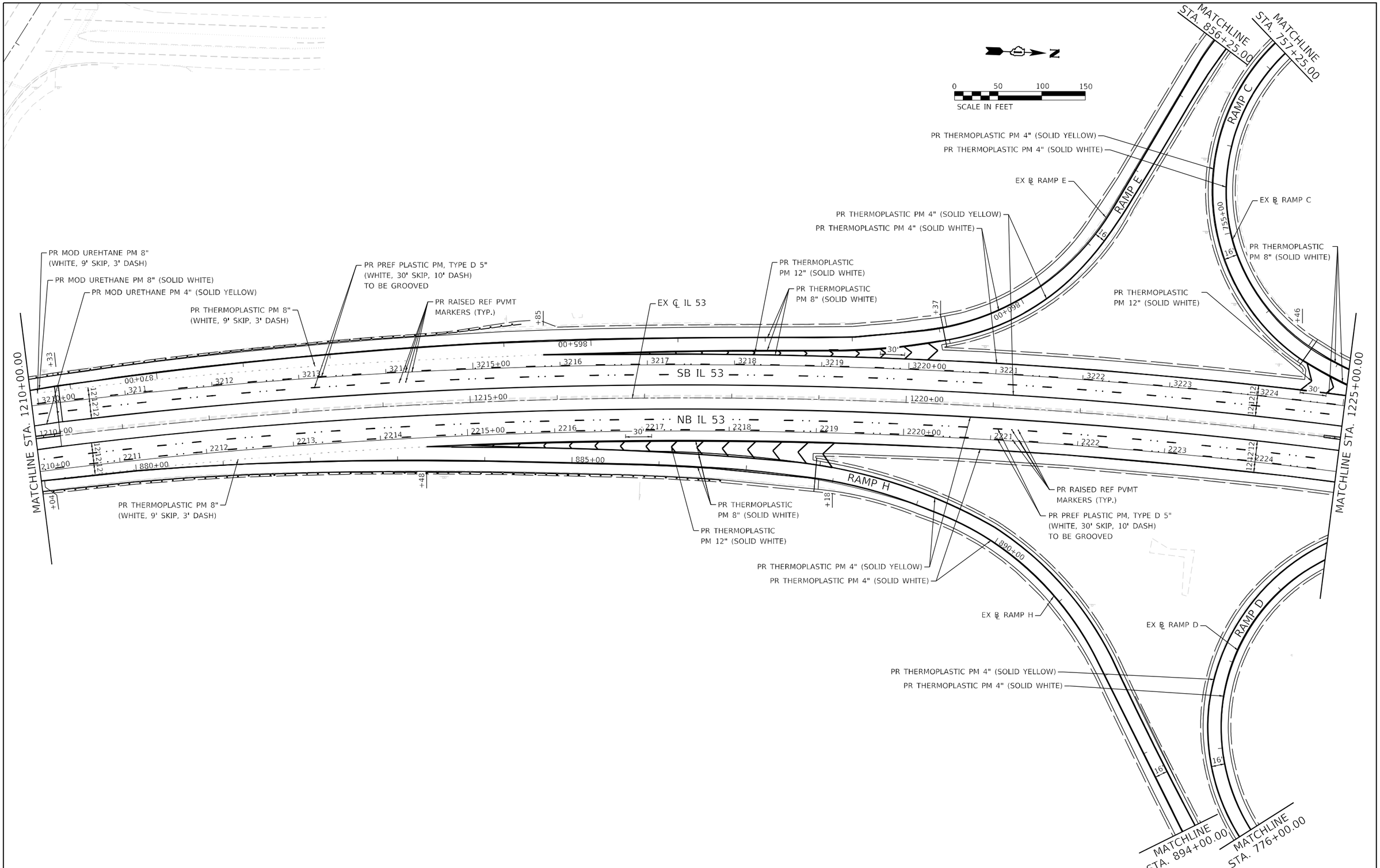

LIN ENGINEERING,LTD. Consulting Engineers Westmont, Illinois	USER NAME = jkenn	DESIGNED - JK	REVISED -
		DRAWN - JK	REVISED -
	PLOT SCALE = 100.0000 ' / in.	CHECKED - ST	REVISED -
	PLOT DATE = 8/22/2024	DATE - 08/2024	REVISED -

STATE OF ILLINOIS
DEPARTMENT OF TRANSPORTATION

IL 53
PAVEMENT MARKING PLAN

SCALE: 1"=50' | SHEET 3 OF 22 SHEETS | STA. 1210+00.00 TO STA. 1225+00.00

F.A.P. RTE.	SECTION	COUNTY	TOTAL SHEETS	SHEET NO.
342	(531) BR23	COOK	1211	423
		CONTRACT NO. 62W38		
		ILLINOIS	FED. AID PROJECT	

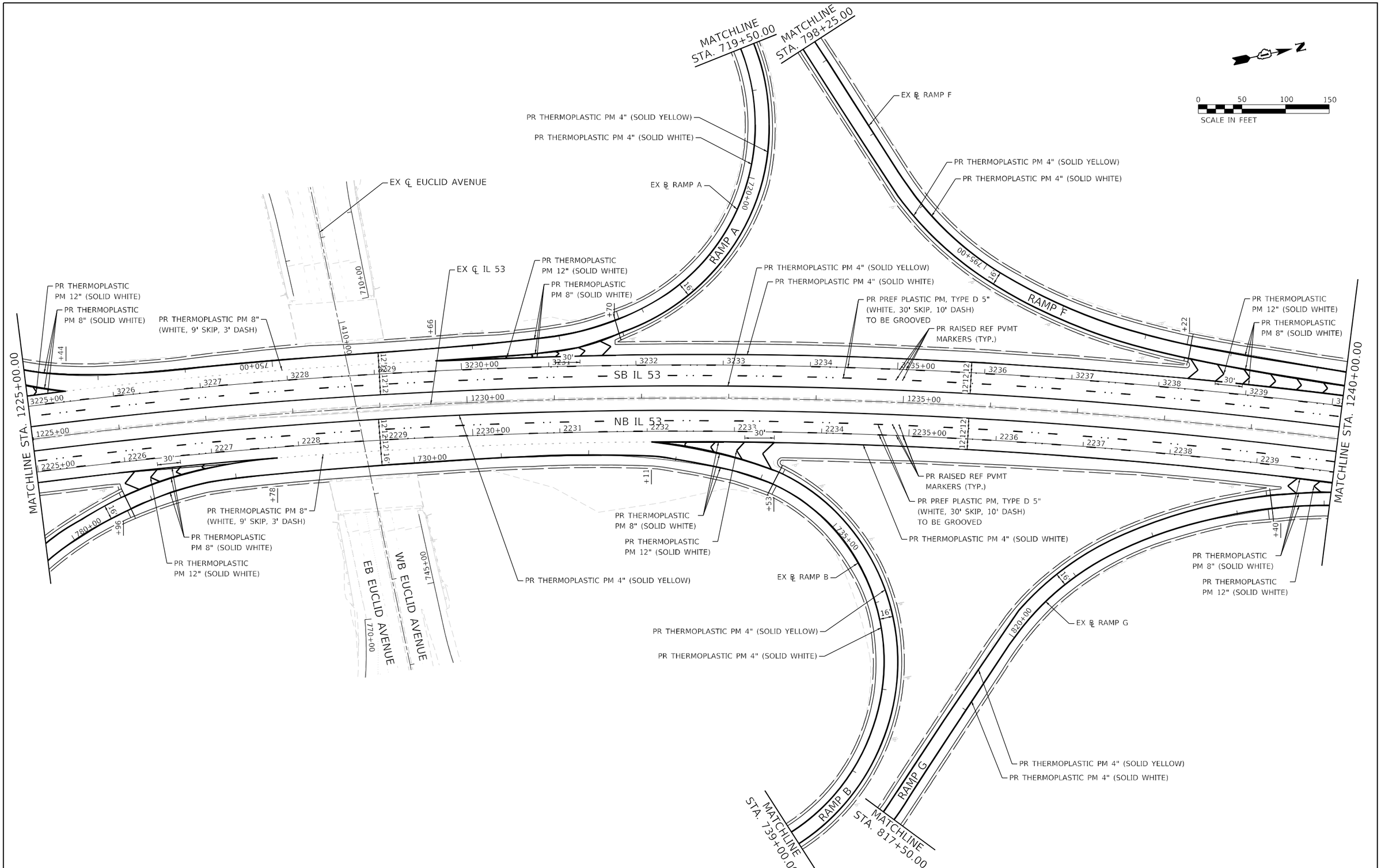

LIN ENGINEERING,LTD. Consulting Engineers Westmont, Illinois	USER NAME = jkenn	DESIGNED - JK	REVISED -	STATE OF ILLINOIS DEPARTMENT OF TRANSPORTATION	IL 53 PAVEMENT MARKING PLAN	F.A.P. RTE.	SECTION	COUNTY	TOTAL SHEETS / SHEET NO.
		DRAWN - JK	REVISED -			342	(531) BR23	COOK	1211 / 424
	PLOT SCALE = 100.0000 ' / in.	CHECKED - ST	REVISED -					CONTRACT NO. 62W38	
	PLOT DATE = 8/22/2024	DATE - 08/2024	REVISED -		SCALE: 1"=50' SHEET 4 OF 22 SHEETS STA. 1225+00.00 TO STA. 1240+00.00			ILLINOIS FED. AID PROJECT	

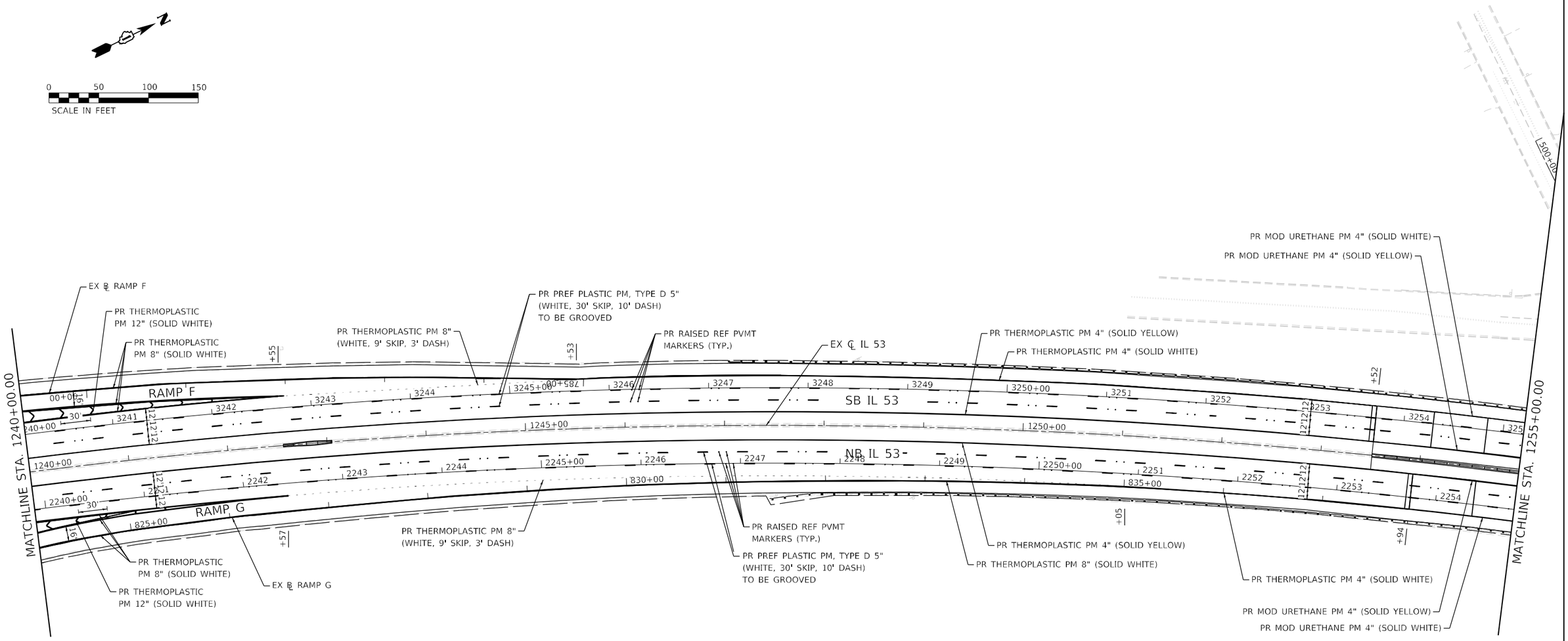

LIN ENGINEERING,LTD. Consulting Engineers Westmont, Illinois	USER NAME = jkeinn	DESIGNED - JK	REVISED -	STATE OF ILLINOIS DEPARTMENT OF TRANSPORTATION	IL 53 PAVEMENT MARKING PLAN	F.A.P. RTE.	SECTION	COUNTY	TOTAL SHEETS / SHEET NO.
		DRAWN - JK	REVISED -			342	(531) BR23	COOK	1211 / 425
	PLOT SCALE = 100.0000 ' / in.	CHECKED - ST	REVISED -					CONTRACT NO. 62W38	
	PLOT DATE = 8/22/2024	DATE - 08/2024	REVISED -		SCALE: 1"=50' SHEET 5 OF 22 SHEETS STA. 1240+00.00 TO STA. 1255+00.00			ILLINOIS FED. AID PROJECT	

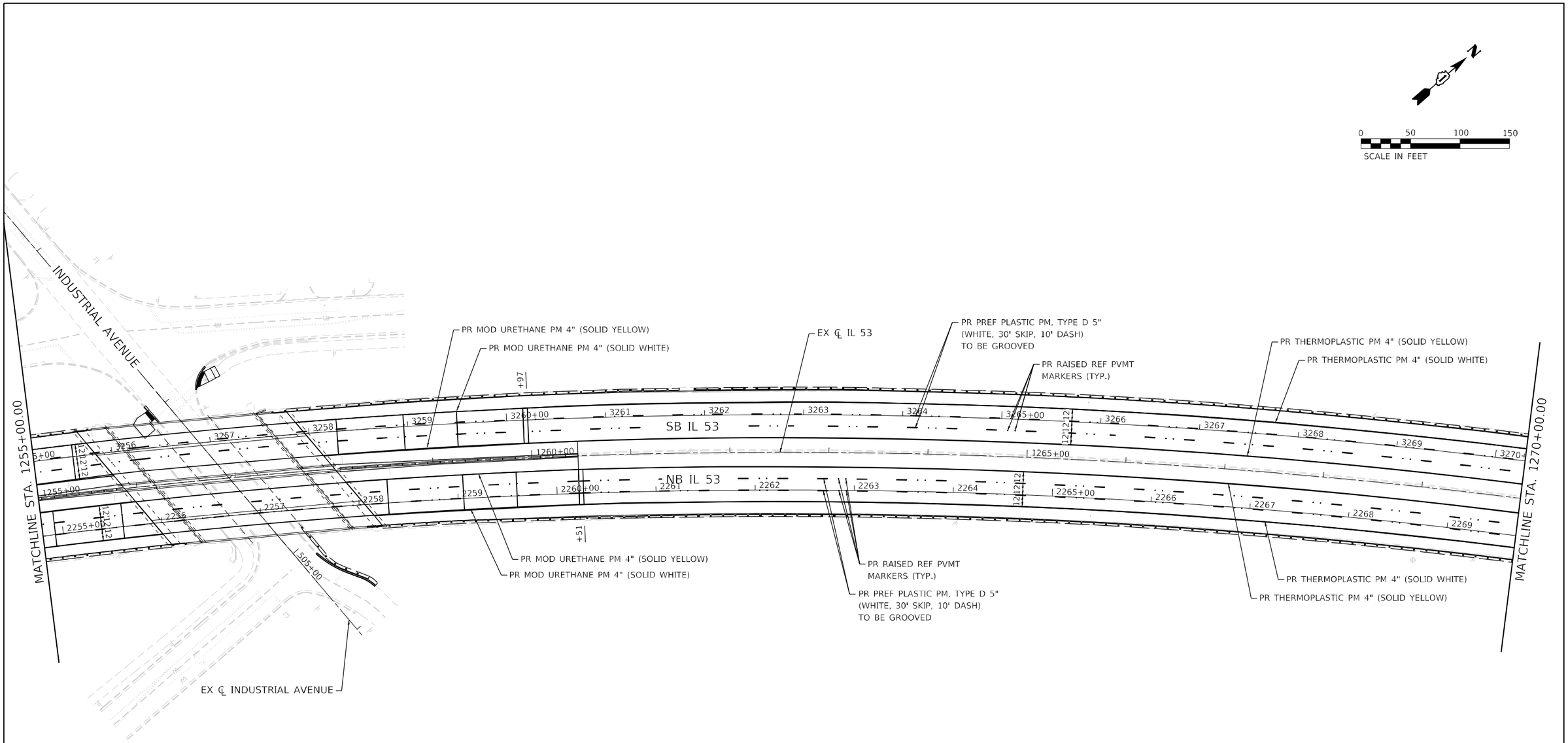

LIN ENGINEERING,LTD. Consulting Engineers Westmont, Illinois	USER NAME = jkeinn	DESIGNED - JK	REVISED -
		DRAWN - JK	REVISED -
	PLOT SCALE = 100.0000 ' / in.	CHECKED - ST	REVISED -
	PLOT DATE = 8/22/2024	DATE - 08/2024	REVISED -

STATE OF ILLINOIS
DEPARTMENT OF TRANSPORTATION

IL 53
PAVEMENT MARKING PLAN

SCALE: 1"=50' | SHEET 6 OF 22 SHEETS | STA. 1255+00.00 TO STA. 1270+00.00

F.A.P. RTE.	SECTION	COUNTY	TOTAL SHEETS	SHEET NO.
342	(531) BR23	COOK	1211	426

CONTRACT NO. 62W38

ILLINOIS | FED. AID PROJECT

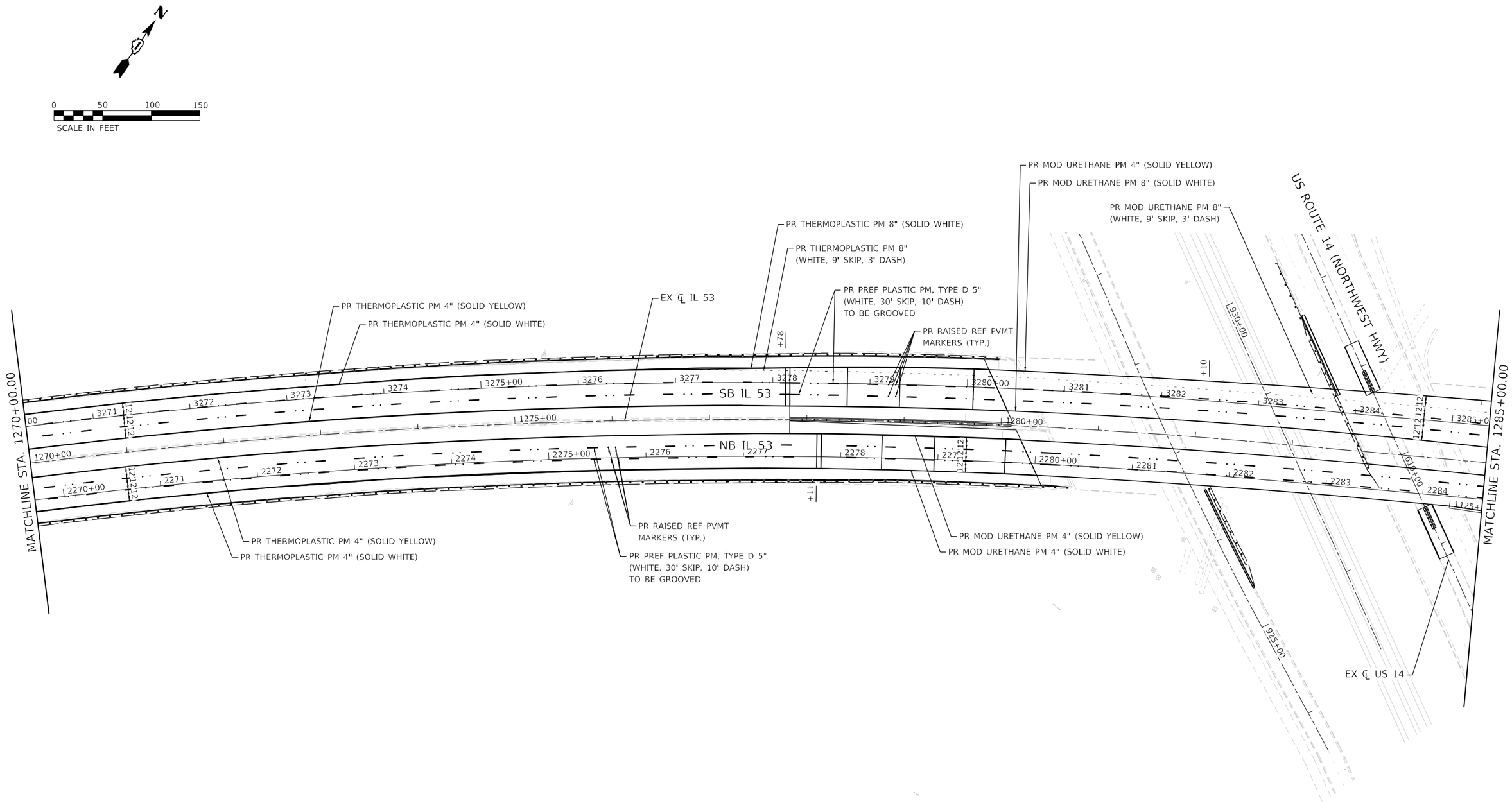

LIN ENGINEERING,LTD. Consulting Engineers Westmont, Illinois	USER NAME = jkeinn	DESIGNED - JK	REVISED -
		DRAWN - JK	REVISED -
	PLOT SCALE = 100.0000 ' / in.	CHECKED - ST	REVISED -
	PLOT DATE = 8/22/2024	DATE - 08/2024	REVISED -

STATE OF ILLINOIS
DEPARTMENT OF TRANSPORTATION

IL 53
PAVEMENT MARKING PLAN

SCALE: 1"=50' | SHEET 7 OF 22 SHEETS | STA. 1270+00.00 TO STA. 1285+00.00

F.A.P. RTE.	SECTION	COUNTY	TOTAL SHEETS	SHEET NO.
342	(531) BR23	COOK	1211	427
		CONTRACT NO. 62W38		
		ILLINOIS	FED. AID PROJECT	

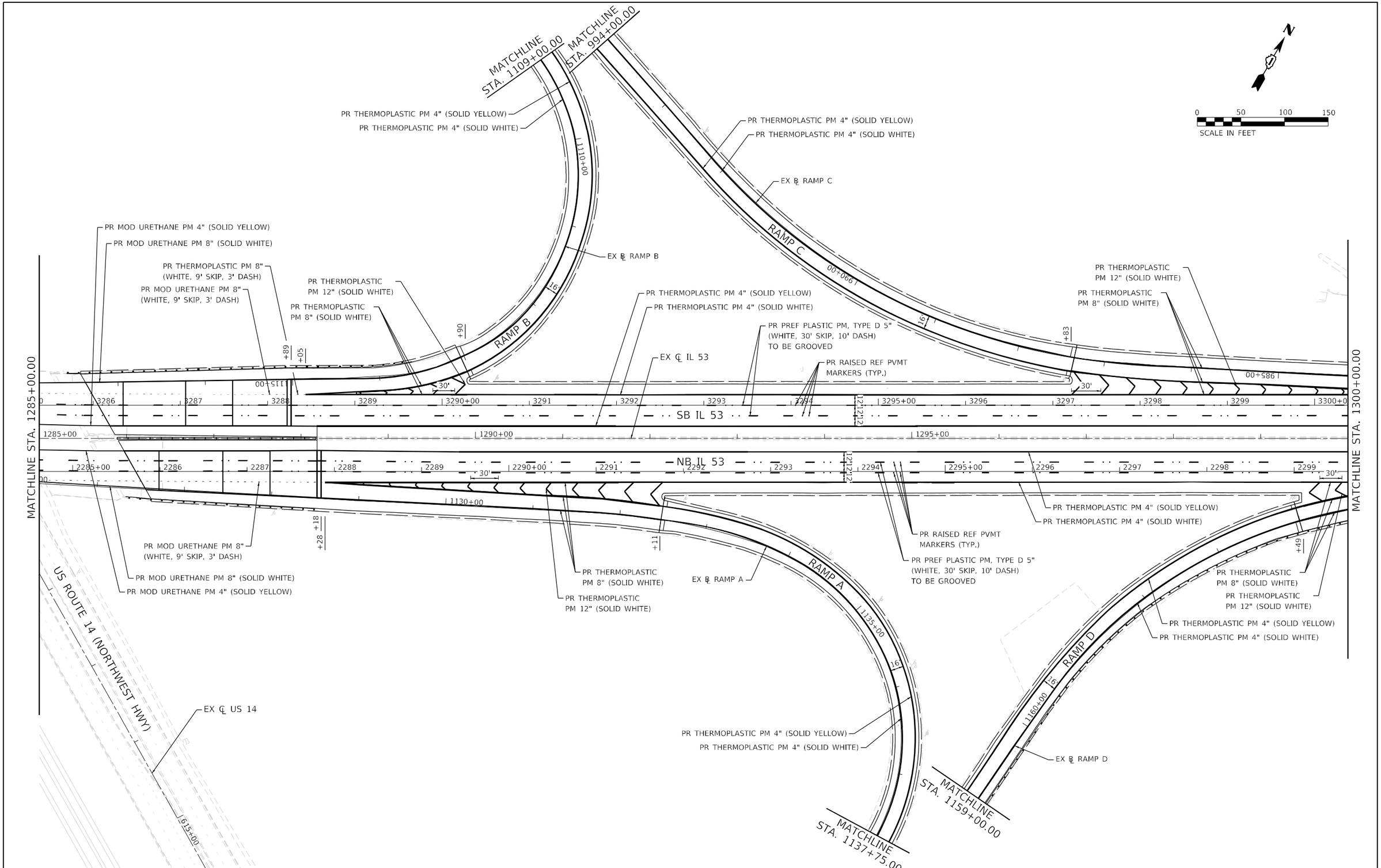

LIN ENGINEERING, LTD. Consulting Engineers Westmont, Illinois	USER NAME = jkeinn	DESIGNED - JK	REVISED -	STATE OF ILLINOIS DEPARTMENT OF TRANSPORTATION	IL 53 PAVEMENT MARKING PLAN
		DRAWN - JK	REVISED -		
	PLOT SCALE = 100.0000 ' / in.	CHECKED - ST	REVISED -		
	PLOT DATE = 8/22/2024	DATE - 08/2024	REVISED -		SCALE: 1"=50' SHEET 8 OF 22 SHEETS STA. 1285+00.00 TO STA. 1300+00.00

F.A.P. RTE.	SECTION	COUNTY	TOTAL SHEETS	SHEET NO.
342	(531) BR23	COOK	1211	428
		CONTRACT NO. 62W38		
		ILLINOIS	FED. AID PROJECT	

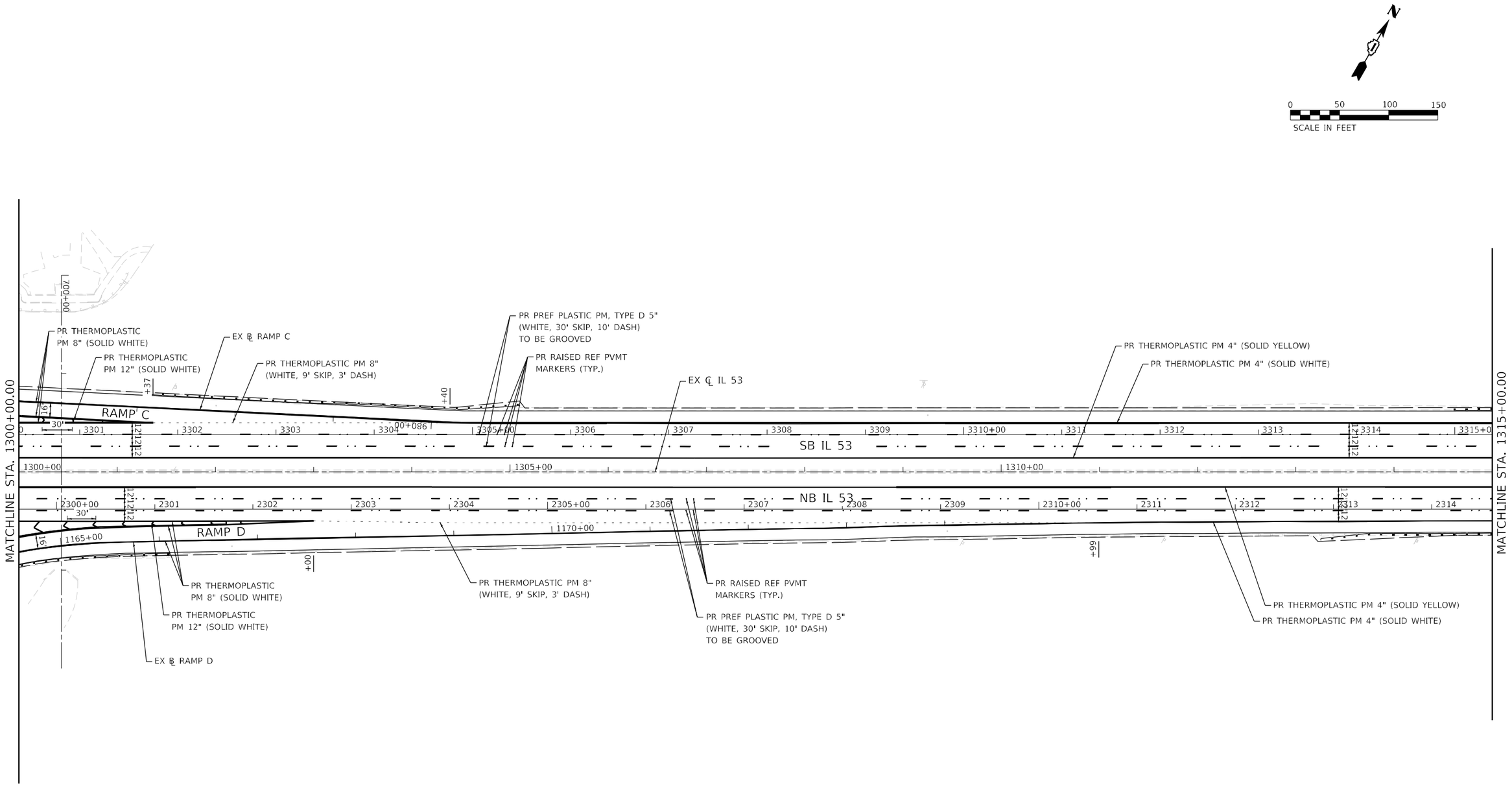

LIN ENGINEERING,LTD. Consulting Engineers Westmont, Illinois	USER NAME = jkeinn	DESIGNED - JK	REVISED -	STATE OF ILLINOIS DEPARTMENT OF TRANSPORTATION	IL 53 PAVEMENT MARKING PLAN	F.A.P. RTE.	SECTION	COUNTY	TOTAL SHEETS / SHEET NO.
		DRAWN - JK	REVISED -			342	(531) BR23	COOK	1211 / 429
	PLOT SCALE = 100.0000 ' / in.	CHECKED - ST	REVISED -					CONTRACT NO. 62W38	
	PLOT DATE = 8/22/2024	DATE - 08/2024	REVISED -		SCALE: 1"=50' SHEET 9 OF 22 SHEETS STA. 1300+00.00 TO STA. 1315+00.00			ILLINOIS FED. AID PROJECT	

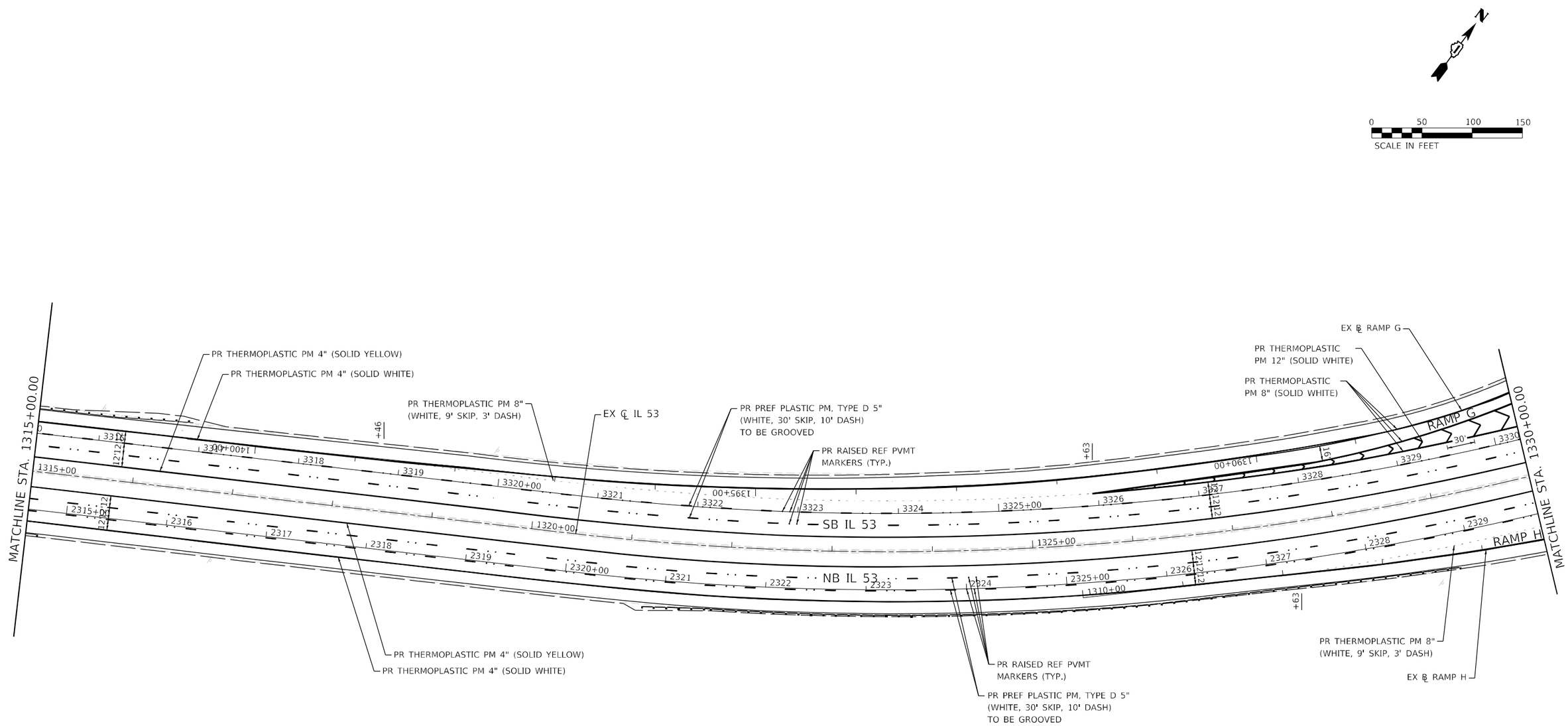

LIN ENGINEERING,LTD. Consulting Engineers Westmont, Illinois	USER NAME = jkehn	DESIGNED - JK	REVISED -	STATE OF ILLINOIS DEPARTMENT OF TRANSPORTATION	IL 53 PAVEMENT MARKING PLAN	F.A.P. RTE.	SECTION	COUNTY	TOTAL SHEETS	SHEET NO.
		DRAWN - JK	REVISED -			342	(531) BR23	COOK	1211	430
	PLOT SCALE = 100.0000 ' / in.	CHECKED - ST	REVISED -					CONTRACT NO. 62W38		
	PLOT DATE = 8/22/2024	DATE - 08/2024	REVISED -		SCALE: 1"=50' SHEET 10 OF 22 SHEETS STA. 1315+00.00 TO STA. 1330+00.00			ILLINOIS FED. AID PROJECT		

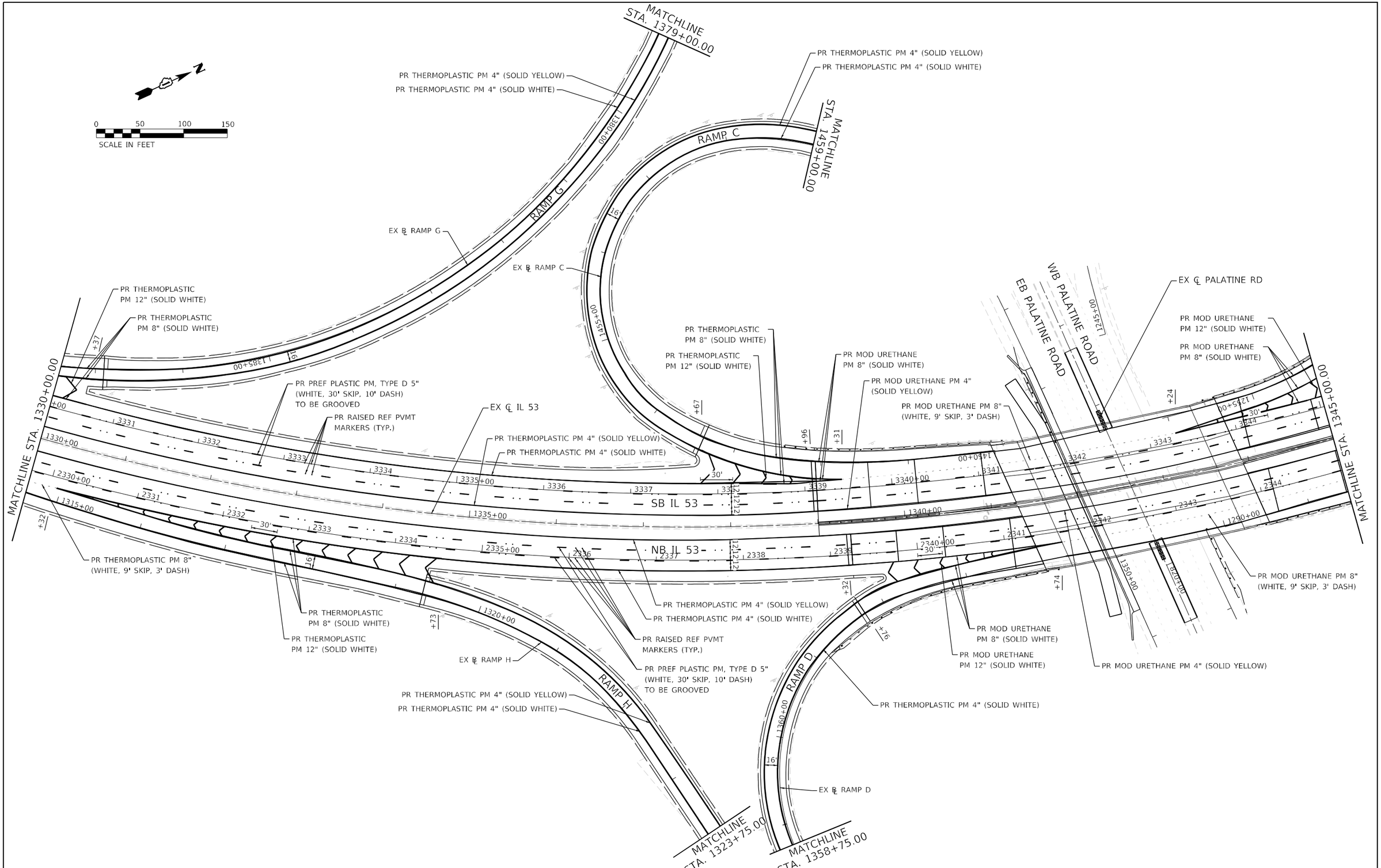

LIN ENGINEERING,LTD. Consulting Engineers Westmont, Illinois	USER NAME = jkehn	DESIGNED - JK	REVISED -	STATE OF ILLINOIS DEPARTMENT OF TRANSPORTATION	IL 53 PAVEMENT MARKING PLAN
		DRAWN - JK	REVISED -		
	PLOT SCALE = 100.0000 ' / in.	CHECKED - ST	REVISED -		
	PLOT DATE = 8/22/2024	DATE - 08/2024	REVISED -		SCALE: 1"=50' SHEET 11 OF 22 SHEETS STA. 1330+00.00 TO STA. 1345+00.00

F.A.P. RTE.	SECTION	COUNTY	TOTAL SHEETS	SHEET NO.
342	(531) BR23	COOK	1211	431
		CONTRACT NO. 62W38		
		ILLINOIS FED. AID PROJECT		

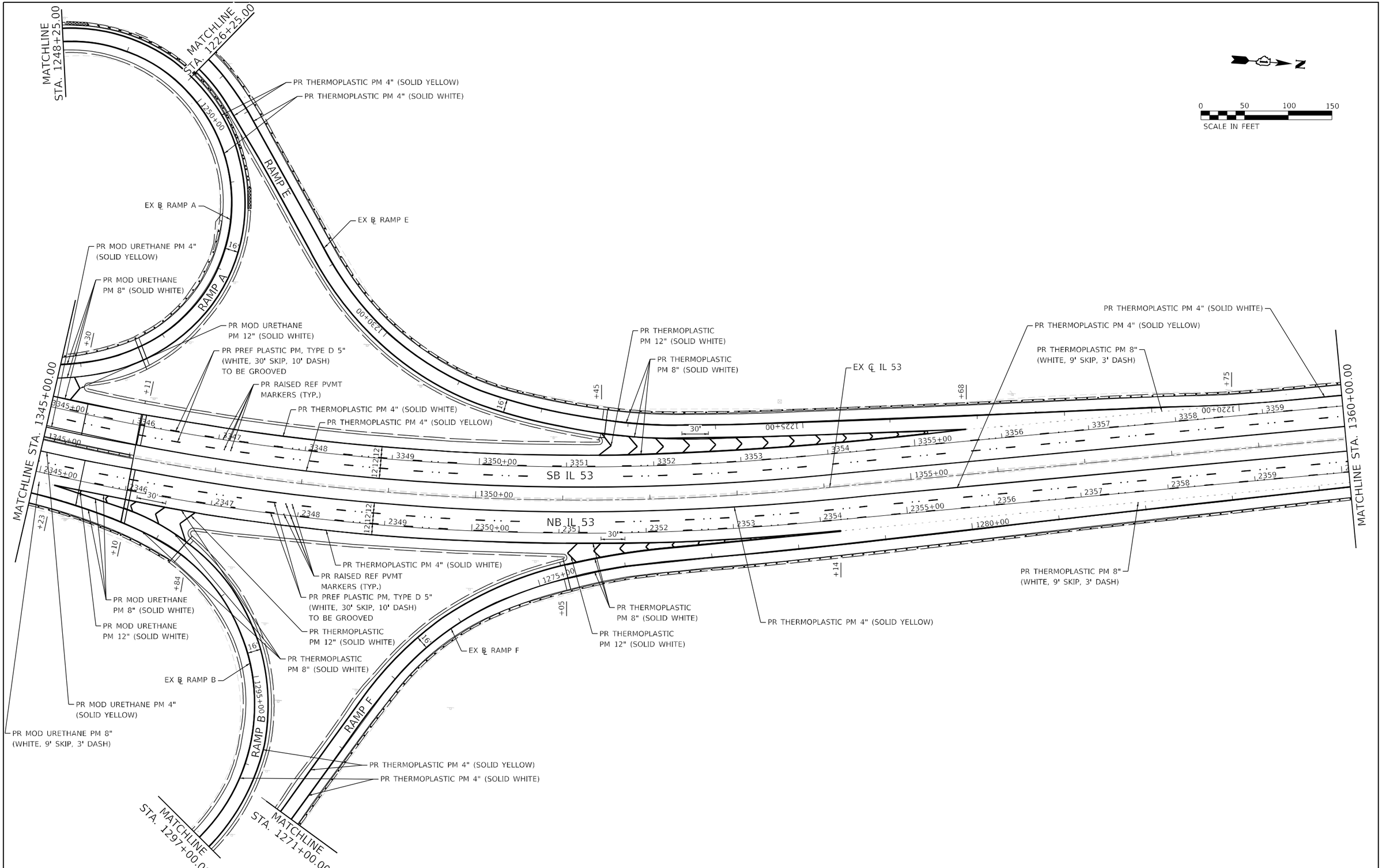

LIN ENGINEERING,LTD. Consulting Engineers Westmont, Illinois	USER NAME = jkeinn	DESIGNED - JK	REVISED -
		DRAWN - JK	REVISED -
	PLOT SCALE = 100.0000 ' / in.	CHECKED - ST	REVISED -
	PLOT DATE = 8/22/2024	DATE - 08/2024	REVISED -

STATE OF ILLINOIS
DEPARTMENT OF TRANSPORTATION

IL 53
PAVEMENT MARKING PLAN

SCALE: 1"=50' | SHEET 12 OF 22 SHEETS | STA. 1345+00.00 TO STA. 1360+00.00

F.A.P. RTE.	SECTION	COUNTY	TOTAL SHEETS	SHEET NO.
342	(531) BR23	COOK	1211	432
		CONTRACT NO. 62W38		
	ILLINOIS	FED. AID PROJECT		

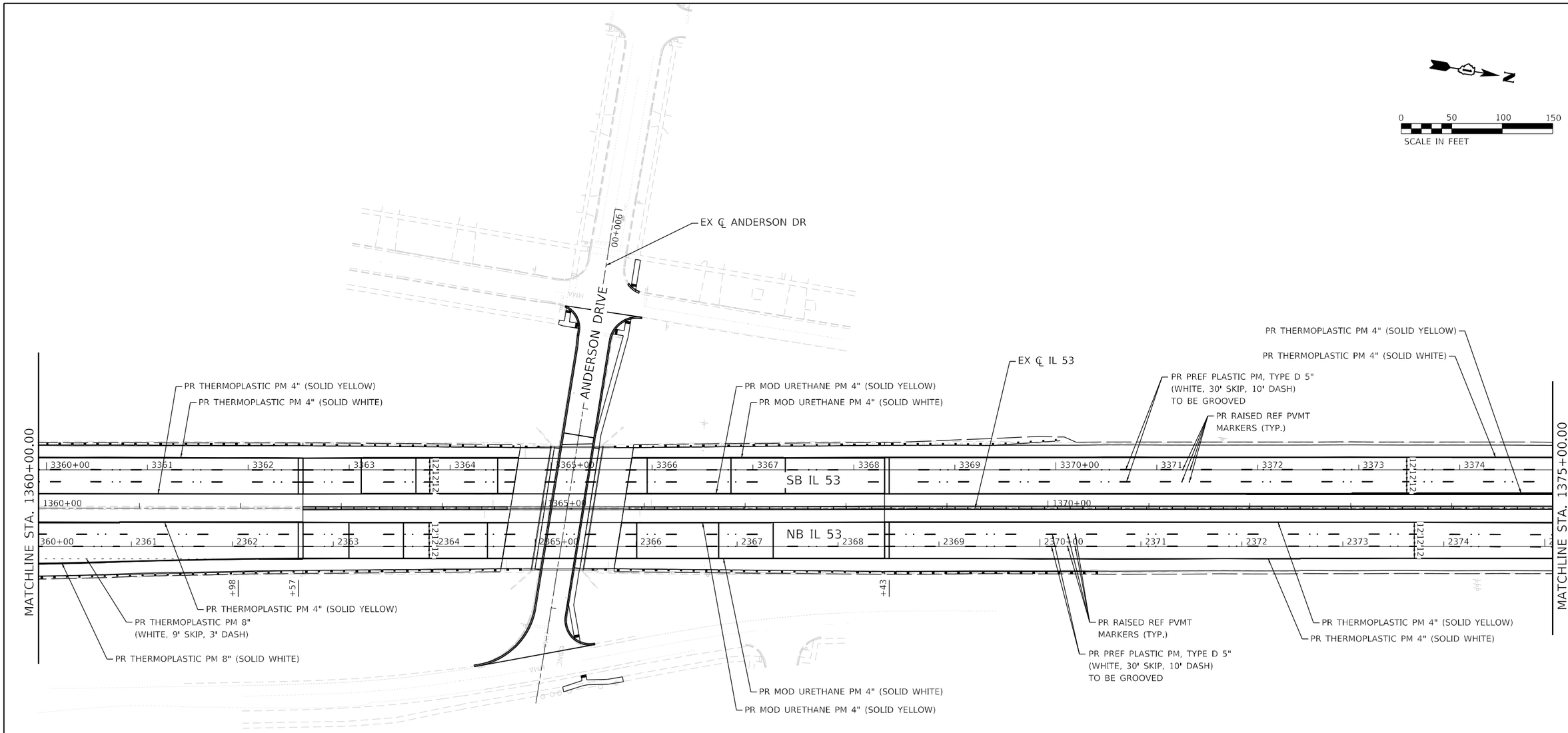

LIN ENGINEERING,LTD. Consulting Engineers Westmont, Illinois	USER NAME = jkeinn	DESIGNED - JK	REVISED -	STATE OF ILLINOIS DEPARTMENT OF TRANSPORTATION	IL 53 PAVEMENT MARKING PLAN	F.A.P. RTE.	SECTION	COUNTY	TOTAL SHEETS / SHEET NO.
		DRAWN - JK	REVISED -			342	(531) BR23	COOK	1211 / 433
	PLOT SCALE = 100.0000 ' / in.	CHECKED - ST	REVISED -					CONTRACT NO. 62W38	
	PLOT DATE = 8/22/2024	DATE - 08/2024	REVISED -		SCALE: 1"=50' SHEET 13 OF 22 SHEETS STA. 1360+00.00 TO STA. 1375+00.00		ILLINOIS	FED. AID PROJECT	

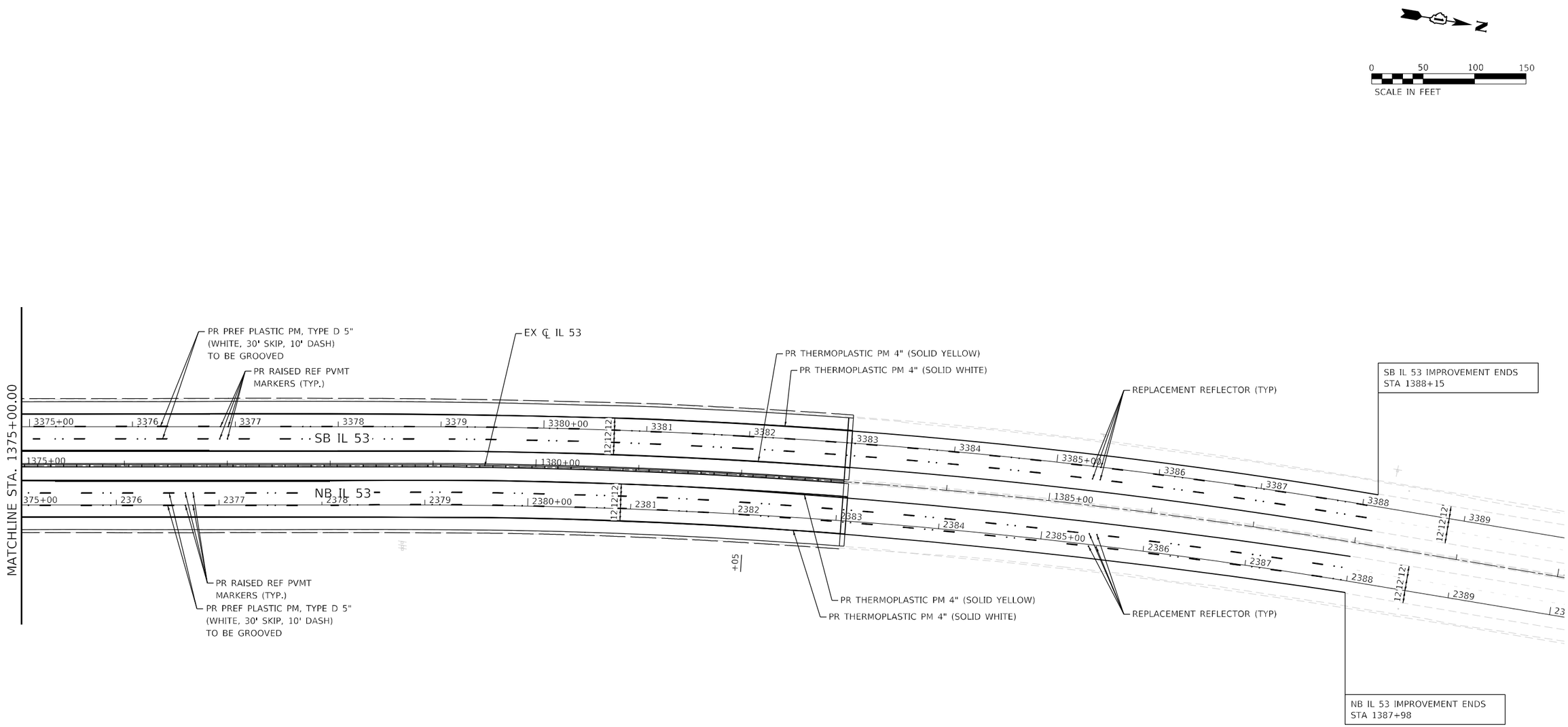

LIN ENGINEERING,LTD. Consulting Engineers Westmont, Illinois	USER NAME = jkenn	DESIGNED - JK	REVISED -
		DRAWN - JK	REVISED -
	PLOT SCALE = 100.0000 ' / in.	CHECKED - ST	REVISED -
	PLOT DATE = 8/22/2024	DATE - 08/2024	REVISED -

STATE OF ILLINOIS
DEPARTMENT OF TRANSPORTATION

IL 53
PAVEMENT MARKING PLAN

SCALE: 1"=50' | SHEET 14 OF 22 SHEETS | STA. 1375+00.00 TO STA. 1388+15.00

F.A.P. RTE.	SECTION	COUNTY	TOTAL SHEETS	SHEET NO.
342	(531) BR23	COOK	1211	434
		CONTRACT NO. 62W38		
		ILLINOIS	FED. AID PROJECT	

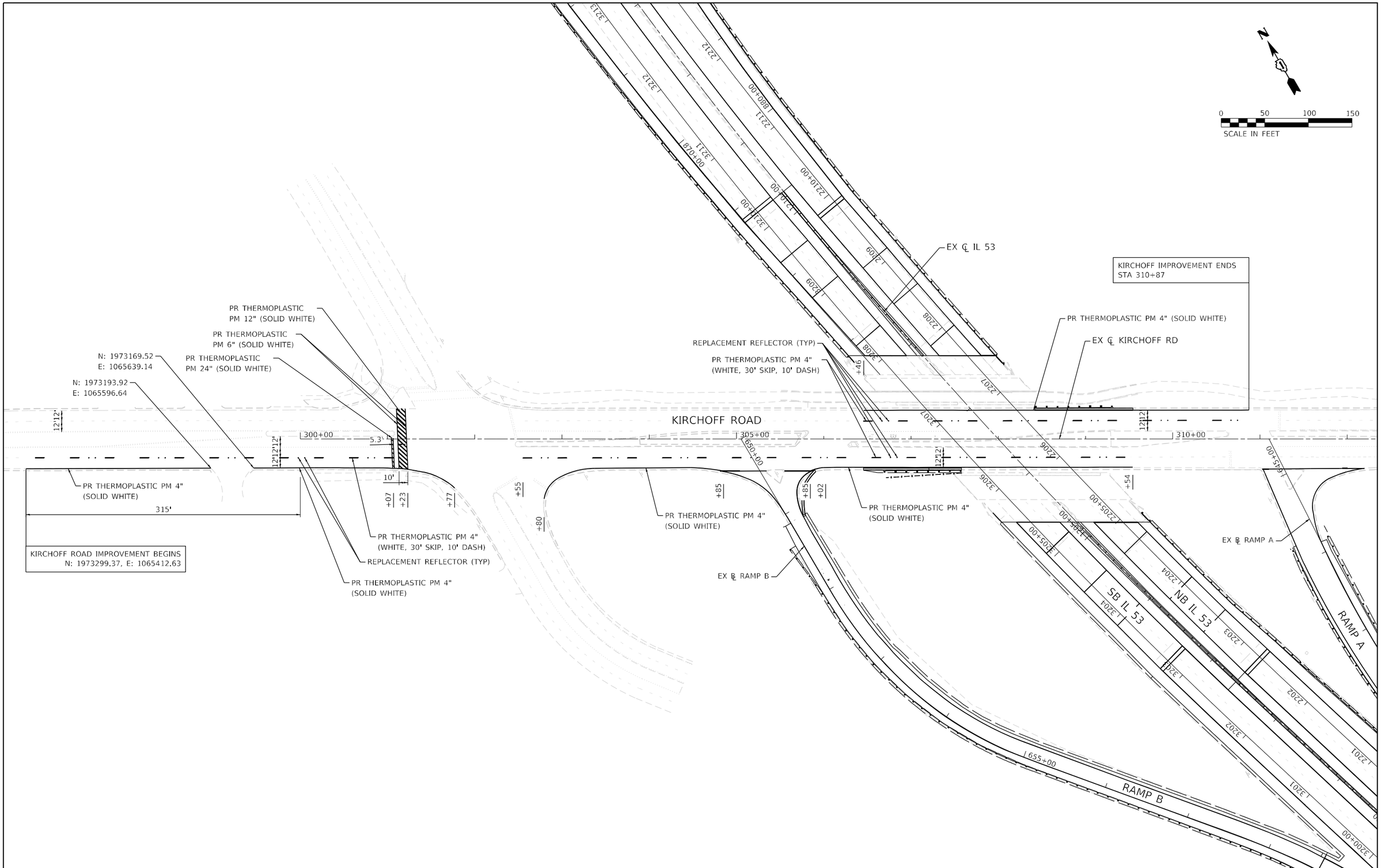

LIN ENGINEERING,LTD. Consulting Engineers Westmont, Illinois	USER NAME = jkehn	DESIGNED - JK	REVISED -	STATE OF ILLINOIS DEPARTMENT OF TRANSPORTATION	KIRCHOFF ROAD PAVEMENT MARKING PLAN
		DRAWN - JK	REVISED -		
	PLOT SCALE = 100.0000 ' / in.	CHECKED - ST	REVISED -		
	PLOT DATE = 8/22/2024	DATE - 08/2024	REVISED -		SCALE: 1"=50' SHEET 15 OF 22 SHEETS STA. 303+45.00 TO STA. 310+87.00

F.A.P. RTE.	SECTION	COUNTY	TOTAL SHEETS	SHEET NO.
342	(531) BR23	COOK	1211	435
		CONTRACT NO. 62W38		
		ILLINOIS	FED. AID PROJECT	

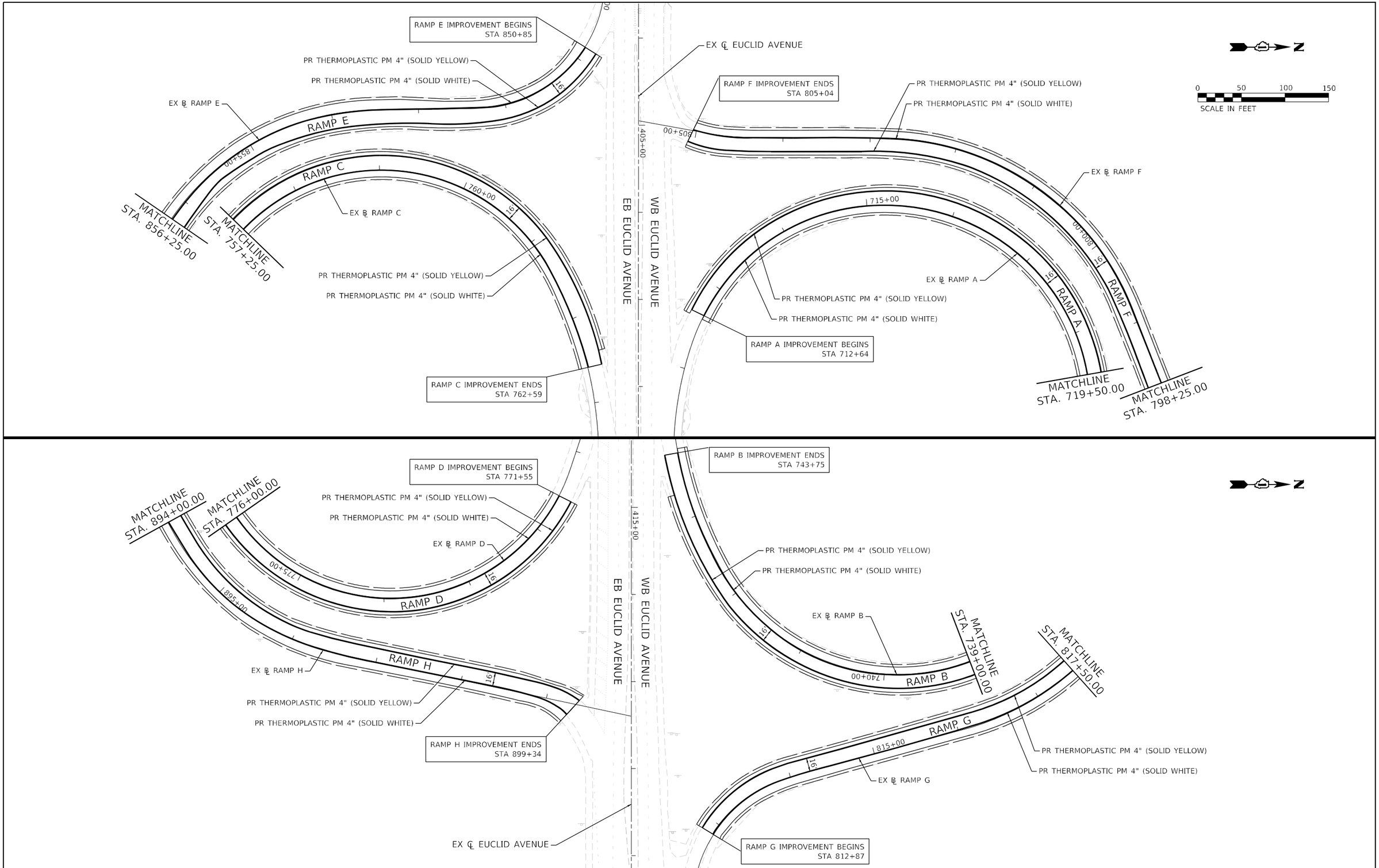

LIN ENGINEERING,LTD. Consulting Engineers Westmont, Illinois	USER NAME = jkeinn	DESIGNED - JK	REVISED -	STATE OF ILLINOIS DEPARTMENT OF TRANSPORTATION	EUCLID AVENUE PAVEMENT MARKING PLAN
		DRAWN - JK	REVISED -		
	PLOT SCALE = 100.0000 ' / in.	CHECKED - ST	REVISED -		
	PLOT DATE = 8/22/2024	DATE - 08/2024	REVISED -		SCALE: 1"=50' SHEET 16 OF 22 SHEETS STA. 798+25.00 TO STA. 805+04.00

F.A.P. RTE.	SECTION	COUNTY	TOTAL SHEETS	SHEET NO.
342	(531) BR23	COOK	1211	436
		CONTRACT NO. 62W38		
		ILLINOIS FED. AID PROJECT		

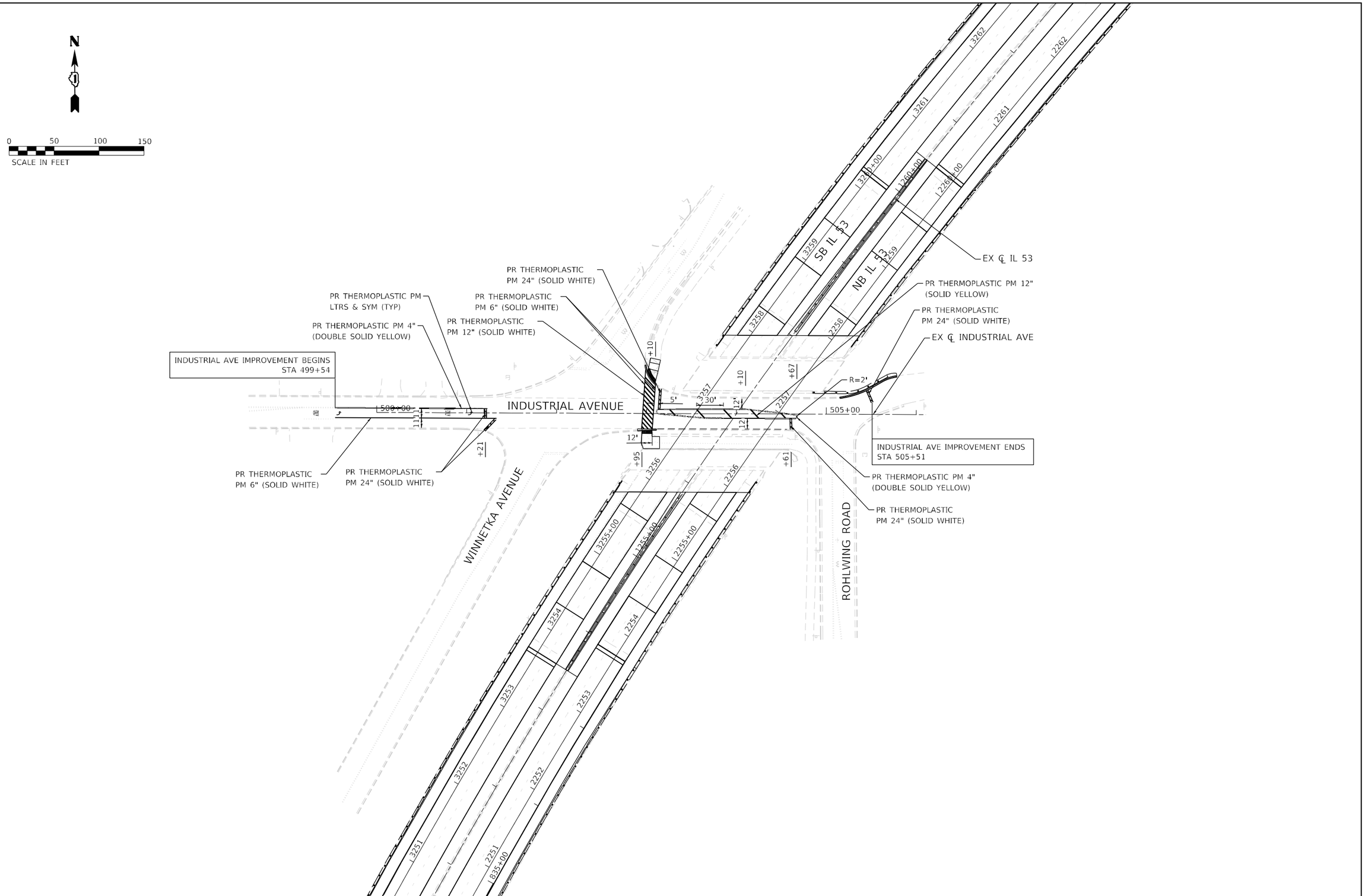

LIN ENGINEERING,LTD. Consulting Engineers Westmont, Illinois	USER NAME = jkeinn	DESIGNED - JK	REVISED -	STATE OF ILLINOIS DEPARTMENT OF TRANSPORTATION	INDUSTRIAL AVENUE PAVEMENT MARKING PLAN
		DRAWN - JK	REVISED -		
	PLOT SCALE = 100.0000 ' / in.	CHECKED - ST	REVISED -		
	PLOT DATE = 8/22/2024	DATE - 08/2024	REVISED -		

SCALE: 1"=50' | SHEET 17 OF 22 SHEETS | STA. 499+54.00 TO STA. 505+51.00

F.A.P. RTE.	SECTION	COUNTY	TOTAL SHEETS	SHEET NO.
342	(531) BR23	COOK	1211	437
		CONTRACT NO. 62W38		
		ILLINOIS	FED. AID PROJECT	

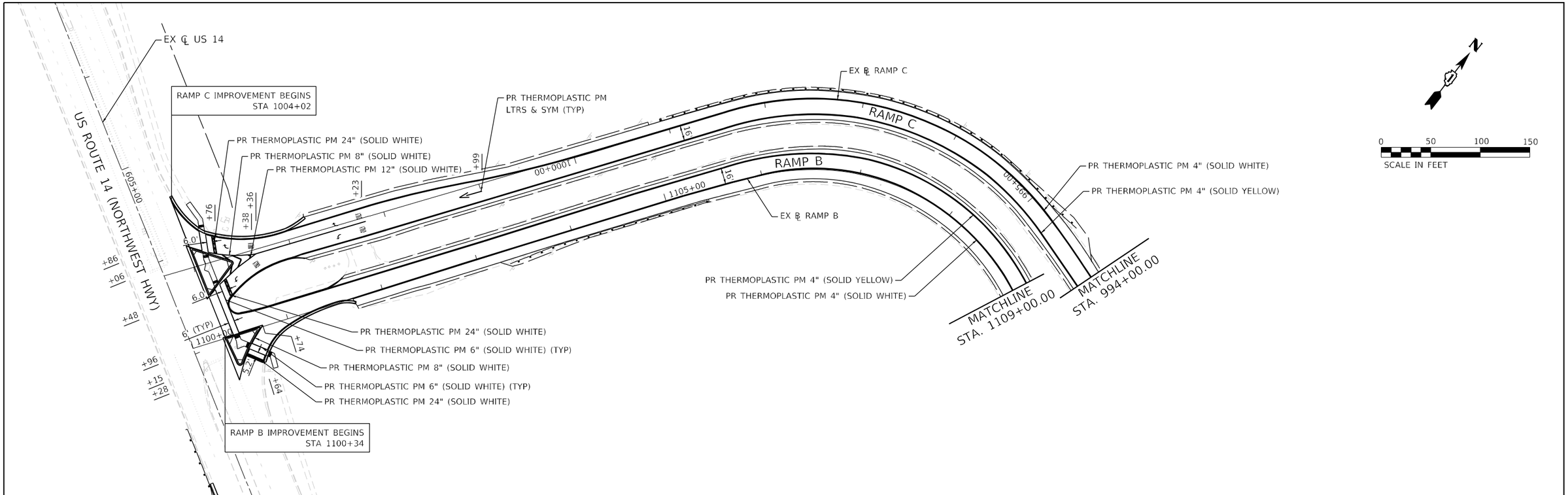

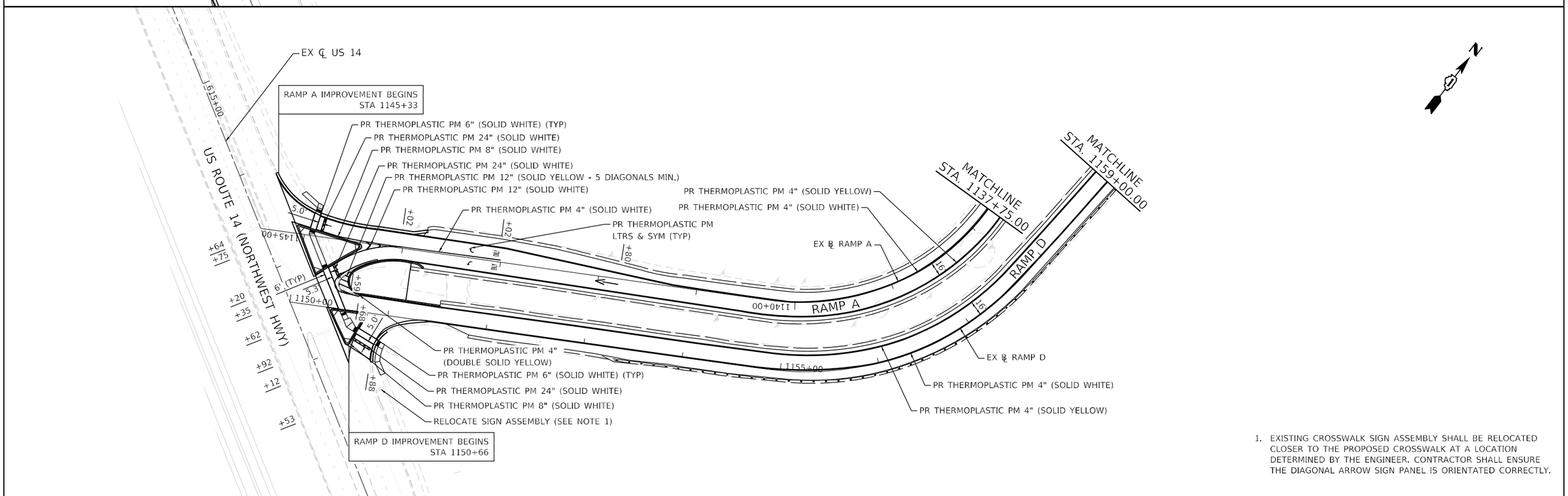

1. EXISTING CROSSWALK SIGN ASSEMBLY SHALL BE RELOCATED CLOSER TO THE PROPOSED CROSSWALK AT A LOCATION DETERMINED BY THE ENGINEER. CONTRACTOR SHALL ENSURE THE DIAGONAL ARROW SIGN PANEL IS ORIENTATED CORRECTLY.

LIN ENGINEERING,LTD. Consulting Engineers Westmont, Illinois	USER NAME = jkeinn	DESIGNED - JK	REVISED -	STATE OF ILLINOIS DEPARTMENT OF TRANSPORTATION	US ROUTE 14 (NORTHWEST HWY) PAVEMENT MARKING PLAN
		DRAWN - JK	REVISED -		
	PLOT SCALE = 100.0000 ' / in.	CHECKED - ST	REVISED -		
	PLOT DATE = 8/22/2024	DATE - 08/2024	REVISED -		SCALE: 1"=50' SHEET 18 OF 22 SHEETS STA. 994+00.00 TO STA. 1004+02.00

F.A.P. RTE.	SECTION	COUNTY	TOTAL SHEETS	SHEET NO.
342	(531) BR23	COOK	1211	438
		CONTRACT NO. 62W38		
		ILLINOIS	FED. AID PROJECT	

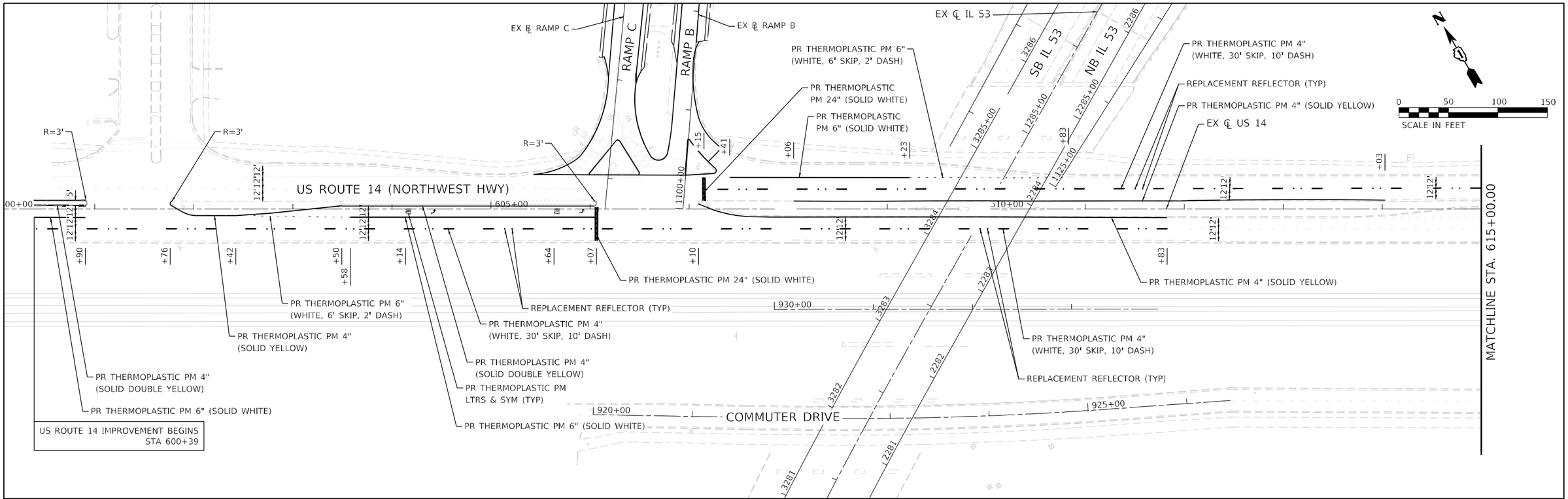

LIN ENGINEERING,LTD. Consulting Engineers Westmont, Illinois	USER NAME = jkehn	DESIGNED - JK	REVISED -
		DRAWN - JK	REVISED -
	PLOT SCALE = 100.0000 ' / in.	CHECKED - ST	REVISED -
	PLOT DATE = 8/23/2024	DATE - 08/2024	REVISED -

STATE OF ILLINOIS
DEPARTMENT OF TRANSPORTATION

US ROUTE 14 (NORTHWEST HWY)
PAVEMENT MARKING PLAN

SCALE: 1"=50' | SHEET 19 OF 22 SHEETS | STA. 602+02.00 TO STA. 614+03.00

F.A.P. RTE.	SECTION	COUNTY	TOTAL SHEETS	SHEET NO.
342	(531) BR23	COOK	1211	439

CONTRACT NO. 62W38

ILLINOIS | FED. AID PROJECT

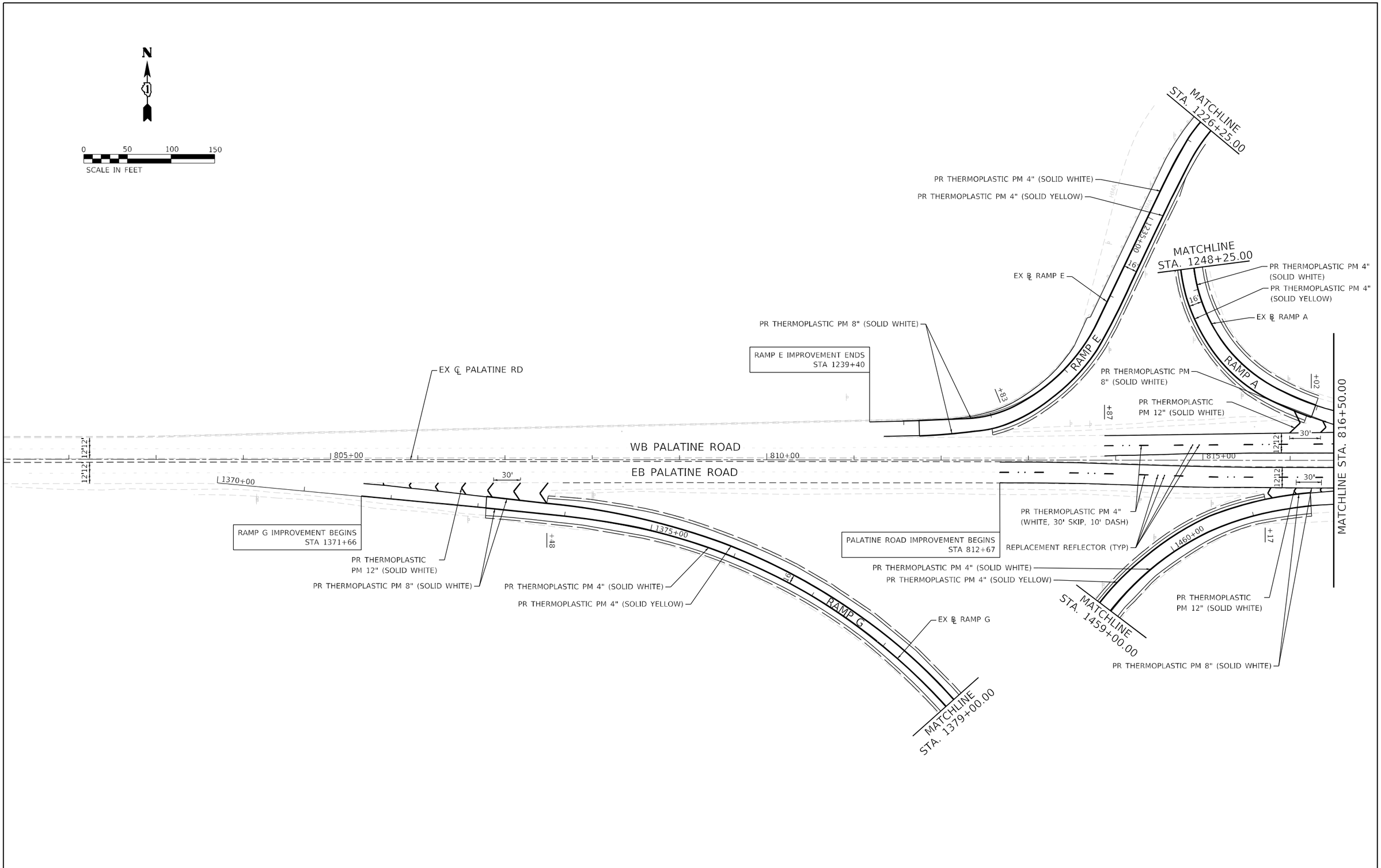

LIN ENGINEERING,LTD. Consulting Engineers Westmont, Illinois	USER NAME = jkehn	DESIGNED - JK	REVISED -
		DRAWN - JK	REVISED -
	PLOT SCALE = 100.0000 ' / in.	CHECKED - ST	REVISED -
	PLOT DATE = 8/22/2024	DATE - 08/2024	REVISED -

STATE OF ILLINOIS
DEPARTMENT OF TRANSPORTATION

PALATINE ROAD
PAVEMENT MARKING PLAN

SCALE: 1"=50' | SHEET 20 OF 22 SHEETS | STA. 812+67.00 TO STA. 816+50.00

F.A.P. RTE.	SECTION	COUNTY	TOTAL SHEETS	SHEET NO.
342	(531) BR23	COOK	1211	440
		CONTRACT NO. 62W38		
		ILLINOIS	FED. AID PROJECT	

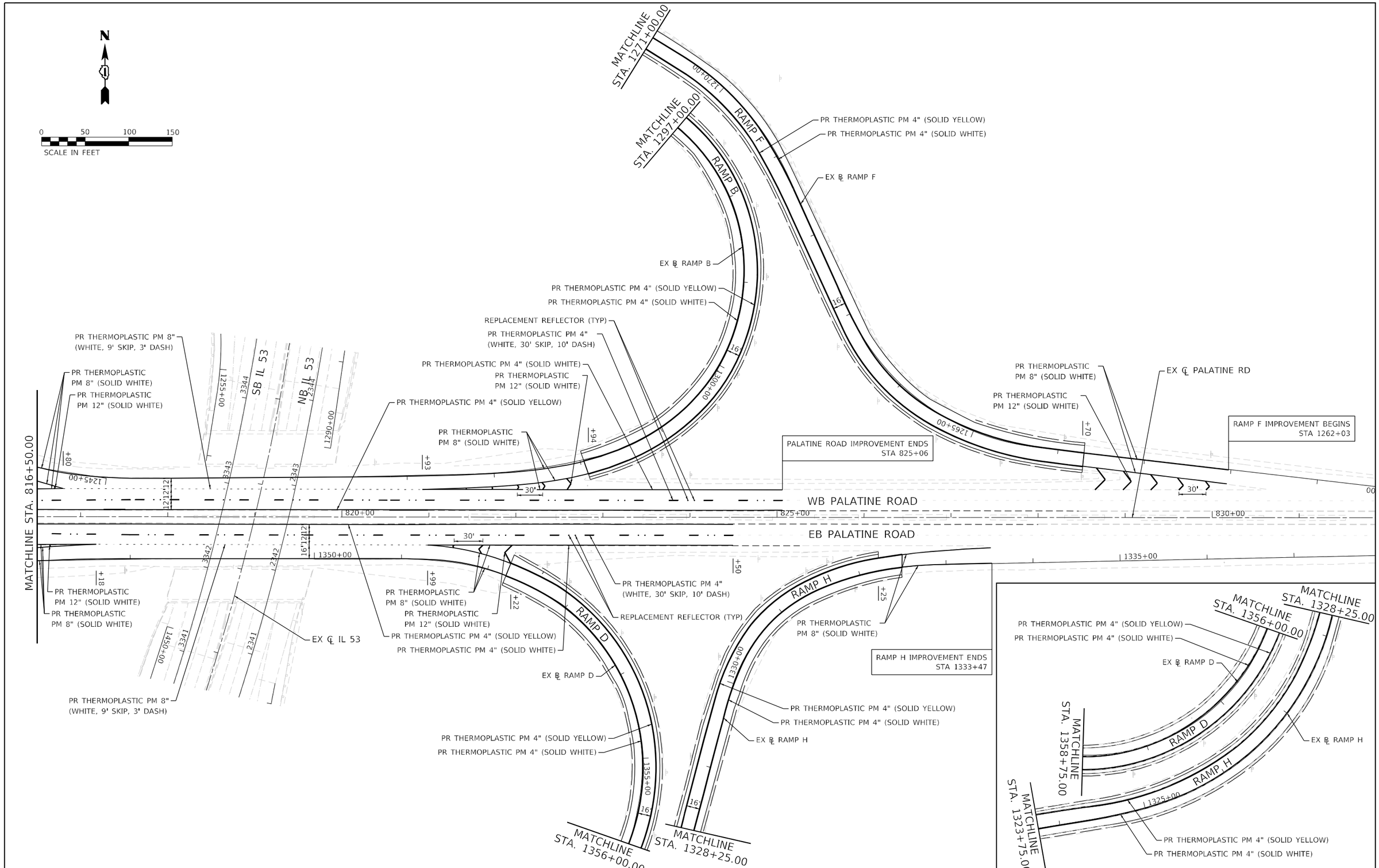

LIN ENGINEERING,LTD. Consulting Engineers Westmont, Illinois	USER NAME = jxeinn	DESIGNED - JK	REVISED -	STATE OF ILLINOIS DEPARTMENT OF TRANSPORTATION	PALATINE ROAD PAVEMENT MARKING PLAN	F.A.P. RTE.	SECTION	COUNTY	TOTAL SHEETS	SHEET NO.
		DRAWN - JK	REVISED -			342	(531) BR23	COOK	1211	441
	PLOT SCALE = 100.0000 ' / in.	CHECKED - ST	REVISED -					CONTRACT NO. 62W38		
	PLOT DATE = 8/22/2024	DATE - 08/2024	REVISED -		SCALE: 1"=50' SHEET 21 OF 22 SHEETS STA. 816+50.00 TO STA. 825+06.00		ILLINOIS	FED. AID PROJECT		

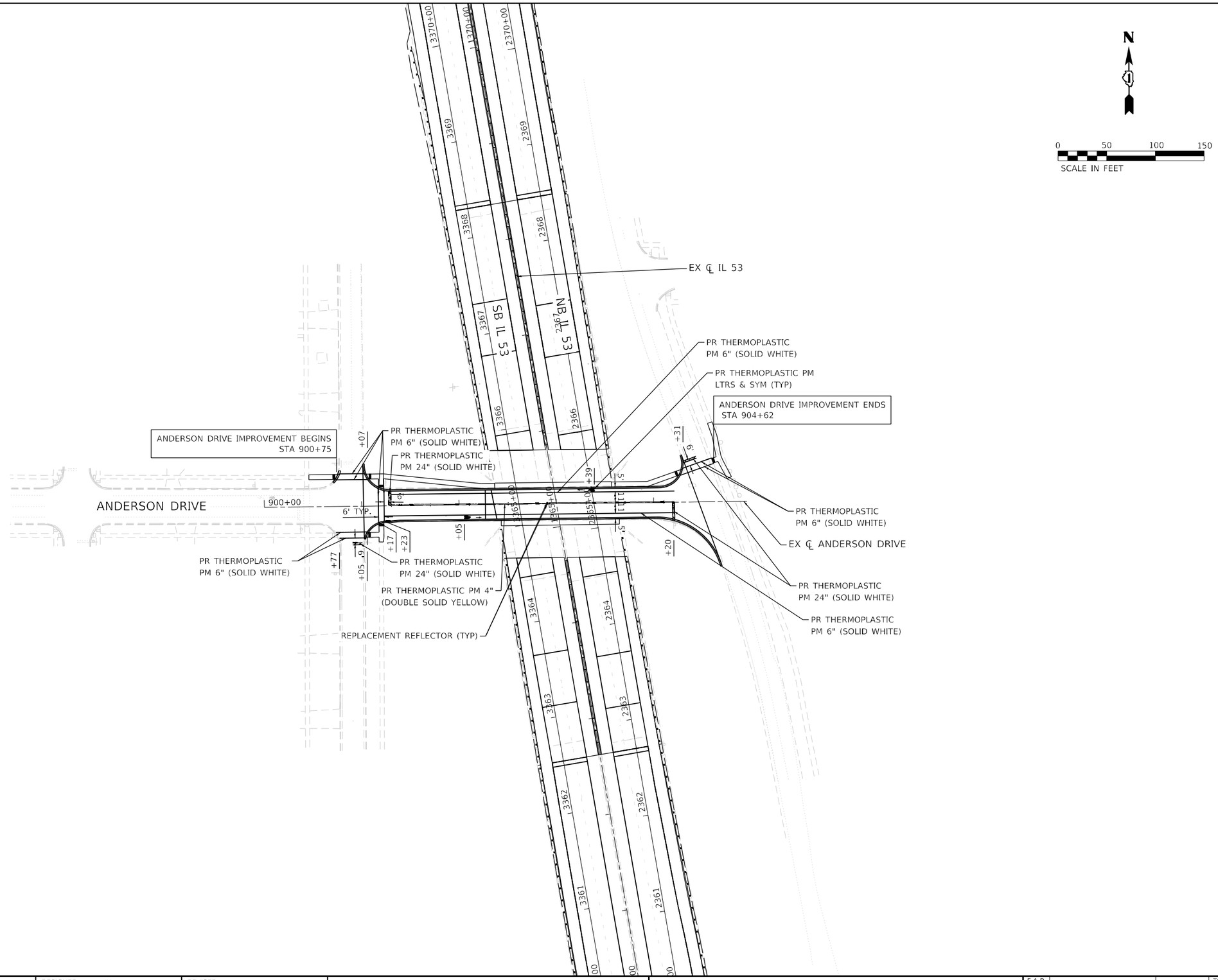

LIN ENGINEERING,LTD. Consulting Engineers Westmont, Illinois	USER NAME = jkeinn	DESIGNED - JK	REVISED -	STATE OF ILLINOIS DEPARTMENT OF TRANSPORTATION	ANDERSON DRIVE PAVEMENT MARKING PLAN	F.A.P. RTE.	SECTION	COUNTY	TOTAL SHEETS / SHEET NO.
		DRAWN - JK	REVISED -			342	(531) BR23	COOK	1211 / 442
	PLOT SCALE = 100.0000 ' / in.	CHECKED - ST	REVISED -					CONTRACT NO. 62W38	
	PLOT DATE = 8/22/2024	DATE - 08/2024	REVISED -		SCALE: 1"=50' SHEET 22 OF 22 SHEETS STA. 900+24.00 TO STA. 904+20.00			ILLINOIS FED. AID PROJECT	

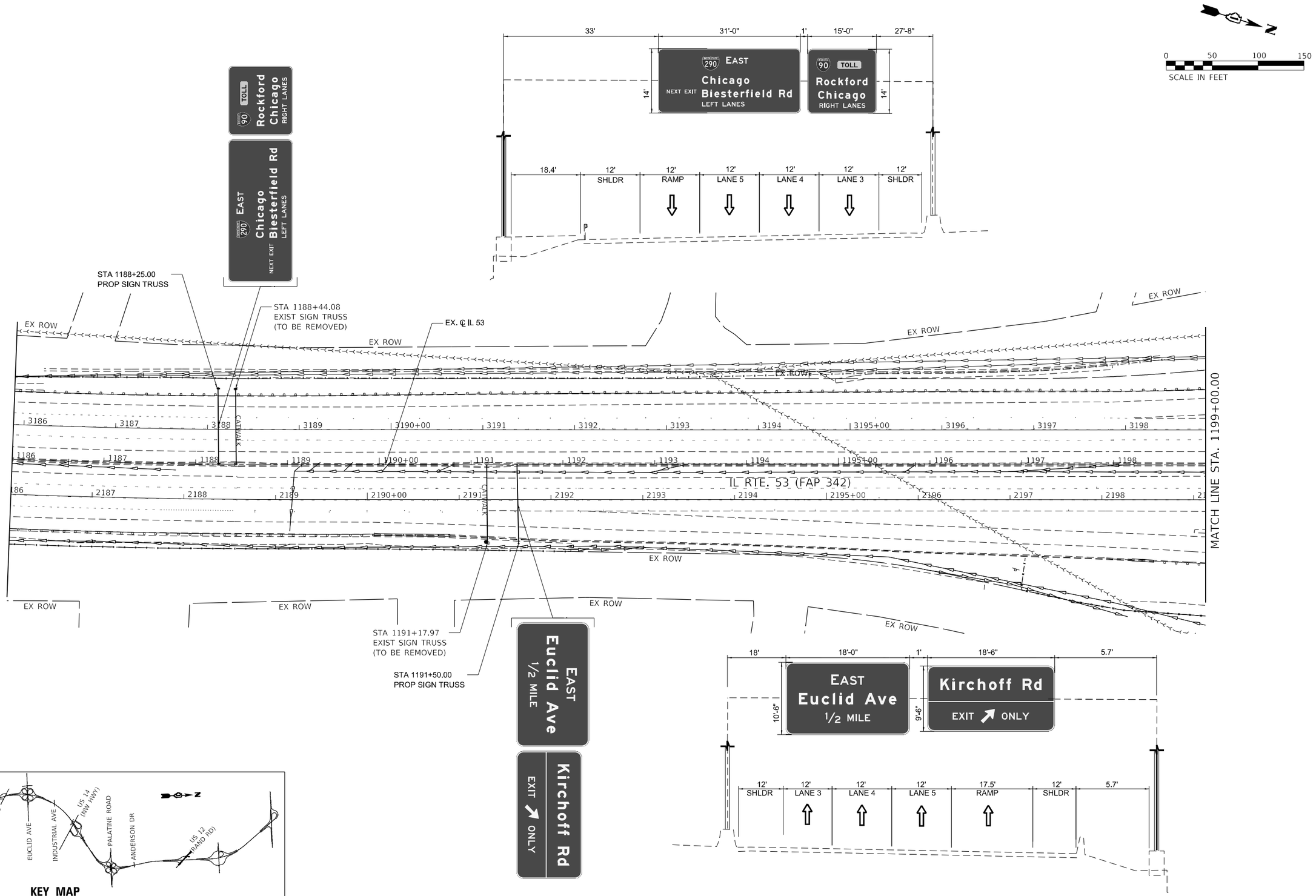

MODEL: Default
FILE NAME: G:\shortcut-targets-by-id\1Gj6696RWnY4n8f5U-QC4Uo9un3hmca\192022-IDOT_Strand_Associates\Design\CAD\Sheets\C3-D162N91-sht-sign1&n-08-153-PINdgn

PIN POINT
1016 W. JACKSON BLVD.
CHICAGO, ILLINOIS 60607
(312) 776-5591

USER NAME = Abdul Khalique	DESIGNED - AK	REVISED -	
	DRAWN - MMA	REVISED -	
PLOT SCALE = 50.0000 ' / in.	CHECKED - AAS	REVISED -	
PLOT DATE = 9/19/2024	DATE -	REVISED -	

STATE OF ILLINOIS
DEPARTMENT OF TRANSPORTATION

IL ROUTE 53
SIGNING PLAN

SCALE: 1" = 50' | SHEET 1 OF 12 SHEETS | STA. 1186+00.00 TO STA. 1199+00.00

F.A.P. RTE.	SECTION	COUNTY	TOTAL SHEETS	SHEET NO.
342	(531)BR 23	COOK	1211	443
		CONTRACT NO. 62W38		
		ILLINOIS	FED. AID PROJECT	

0 50 100 150
SCALE IN FEET

RELOC SIGN
PAN ASSY TA
W4-3-48

EX. ℄ IL 53

NB IL 53 PGL

SB IL 53 PGL

IL RTE. 53 (FAP 342)

MATCH LINE STA. 1199+00.00

MATCH LINE STA. 1213+50.00

KIRCHOFF ROAD

EX. ℄ KIRCHOFF ROAD

℄ EXISTING SB
ON RAMP AT
KIRCHOFF RD

℄ EXISTING NB
OFF RAMP AT
KIRCHOFF RD

EX ROW

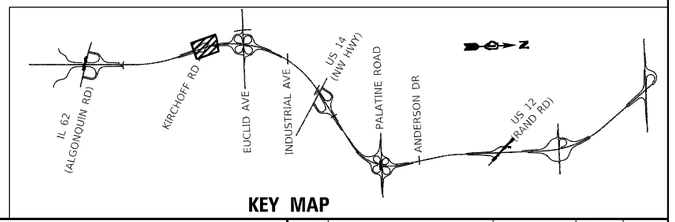

KEY MAP

PIN POINT PRECISION ENGINEERING
1016 W. JACKSON BLVD.
CHICAGO, ILLINOIS 60607
(312) 776-5591

USER NAME = Abdul Khalique	DESIGNED - AK	REVISED -	
	DRAWN - MMA	REVISED -	
PLOT SCALE = 50.0000 ' / in.	CHECKED - AAS	REVISED -	
PLOT DATE = 8/23/2024	DATE -	REVISED -	

STATE OF ILLINOIS
DEPARTMENT OF TRANSPORTATION

IL ROUTE 53
SIGNING PLAN

SCALE: 1" = 50' | SHEET 2 OF 12 SHEETS | STA. 1199+00.00 TO STA. 1213+50.00

F.A.P. RTE.	SECTION	COUNTY	TOTAL SHEETS	SHEET NO.
342	(531)BR 23	COOK	1211	444

CONTRACT NO. 62W38

ILLINOIS | FED. AID PROJECT

MODEL: Default
FILE NAME: G:\shortcut-targets-by-id\1Gd69RWnY4n8F5U-OC4Uptlm3Hnca\192022-IDOT_Strand Associates\Design\CADSheets\C3-D162N3-Lilt-Elignplan-09x153-PIN.dgn

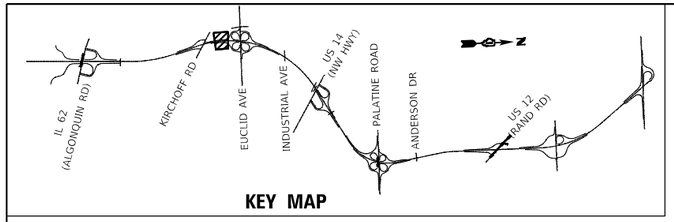

KEY MAP

N

0 50 100 150

SCALE IN FEET

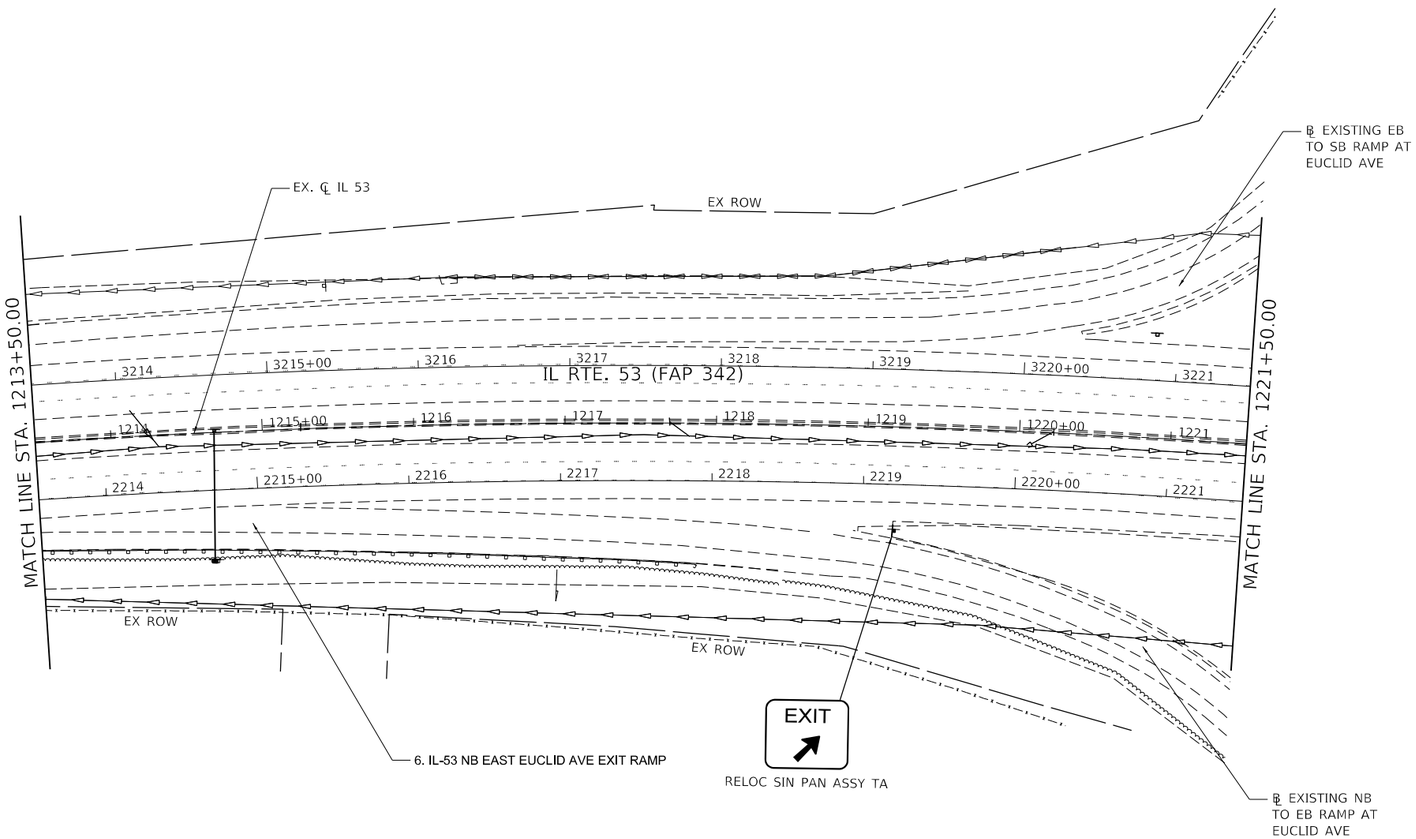

MODEL: Default
FILE NAME: G:\shortcut-targets-by-id\1Gd6696RWN14n8F5U-OC4Uptlam3Hnca\192022-IDOT_Strand Associates\Design\CAD\Sheets\C3-D162N3-sht-signplan-10-153-PN.dgn

PIN POINT PRECISION ENGINEERING
1016 W. JACKSON BLVD.
CHICAGO, ILLINOIS 60607
(312) 776-5591

USER NAME = Abdul Khalique	DESIGNED - AK	REVISED -	
	DRAWN - MMA	REVISED -	
PLOT SCALE = 50.0000 ' / in.	CHECKED - AAS	REVISED -	
PLOT DATE = 8/23/2024	DATE -	REVISED -	

STATE OF ILLINOIS
DEPARTMENT OF TRANSPORTATION

IL ROUTE 53
SIGNING PLAN

SCALE: 1" = 50' | SHEET 3 OF 12 SHEETS | STA. 1213+50.00 TO STA. 1221+50.00

F.A.P. RTE.	SECTION	COUNTY	TOTAL SHEETS	SHEET NO.
342	(531)BR 23	COOK	1211	445
		CONTRACT NO. 62W38		
		ILLINOIS FED. AID PROJECT		

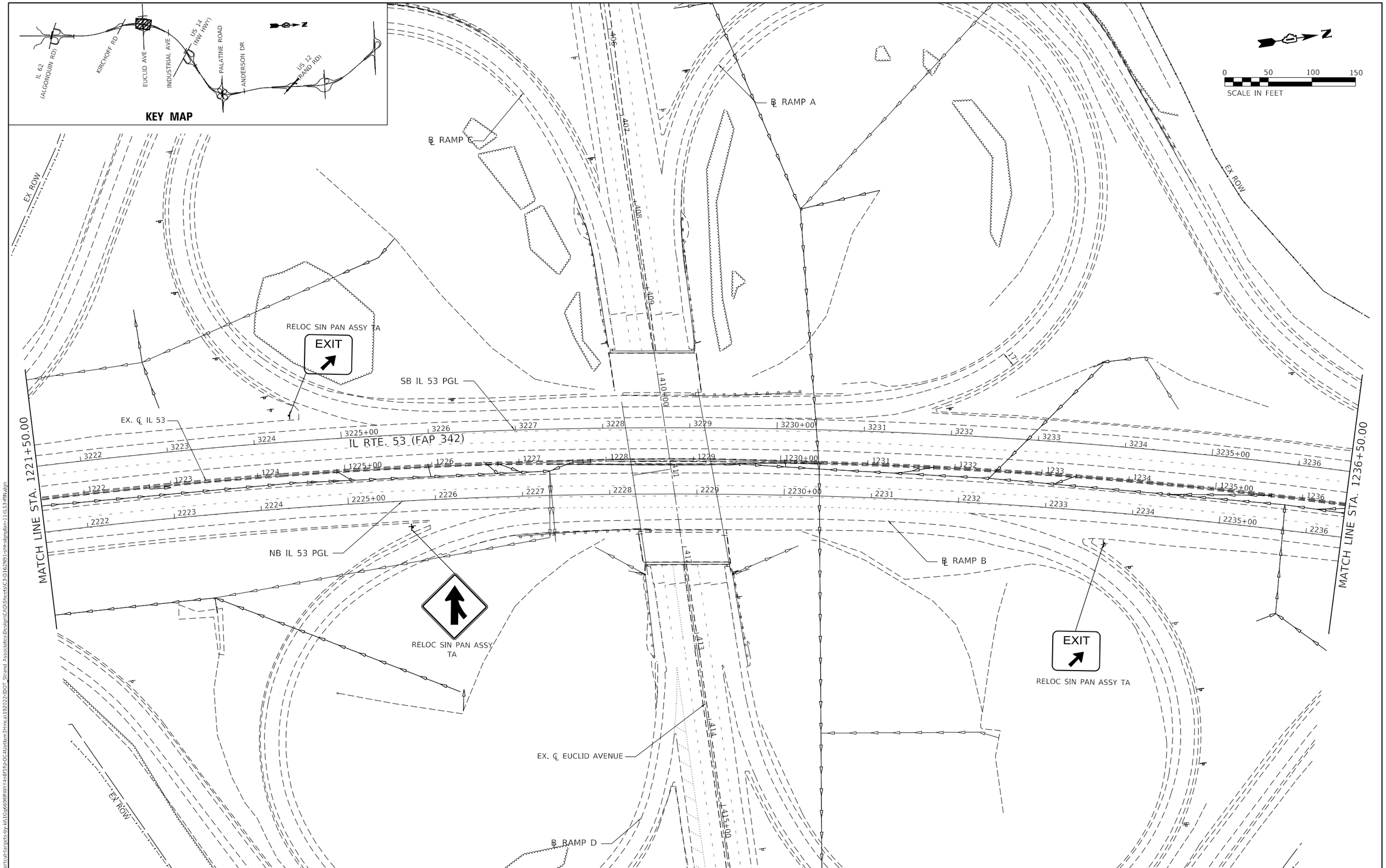

MODEL: Default
FILE NAME: G:\shortcut-targets-by-id\1Gq669RWn4n8f5fU-OC4Uo6Um3hmca192022=IDOT Strand Associates\Design\CADSheets\C3-D162N91-sht-signplan-1-1-53=PIN.dgn

PIN POINT
1016 W. JACKSON BLVD.
CHICAGO, ILLINOIS 60607
(312) 776-5591

USER NAME = Abdul Khalique	DESIGNED - AK	REVISED -
	DRAWN - MMA	REVISED -
PLOT SCALE = 50.0000 ' / in.	CHECKED - AAS	REVISED -
PLOT DATE = 8/23/2024	DATE -	REVISED -

STATE OF ILLINOIS
DEPARTMENT OF TRANSPORTATION

IL ROUTE 53
SIGNING PLAN

SCALE: 1" = 50' | SHEET 4 OF 12 SHEETS | STA. 1221+50.00 TO STA. 1236+50.00

F.A.P. RTE.	SECTION	COUNTY	TOTAL SHEETS	SHEET NO.
342	(531)BR 23	COOK	1211	446
		CONTRACT NO. 62W38		
		ILLINOIS	FED. AID PROJECT	

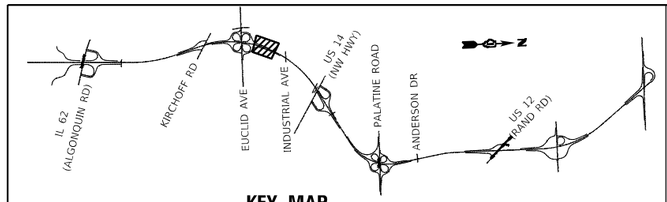

KEY MAP

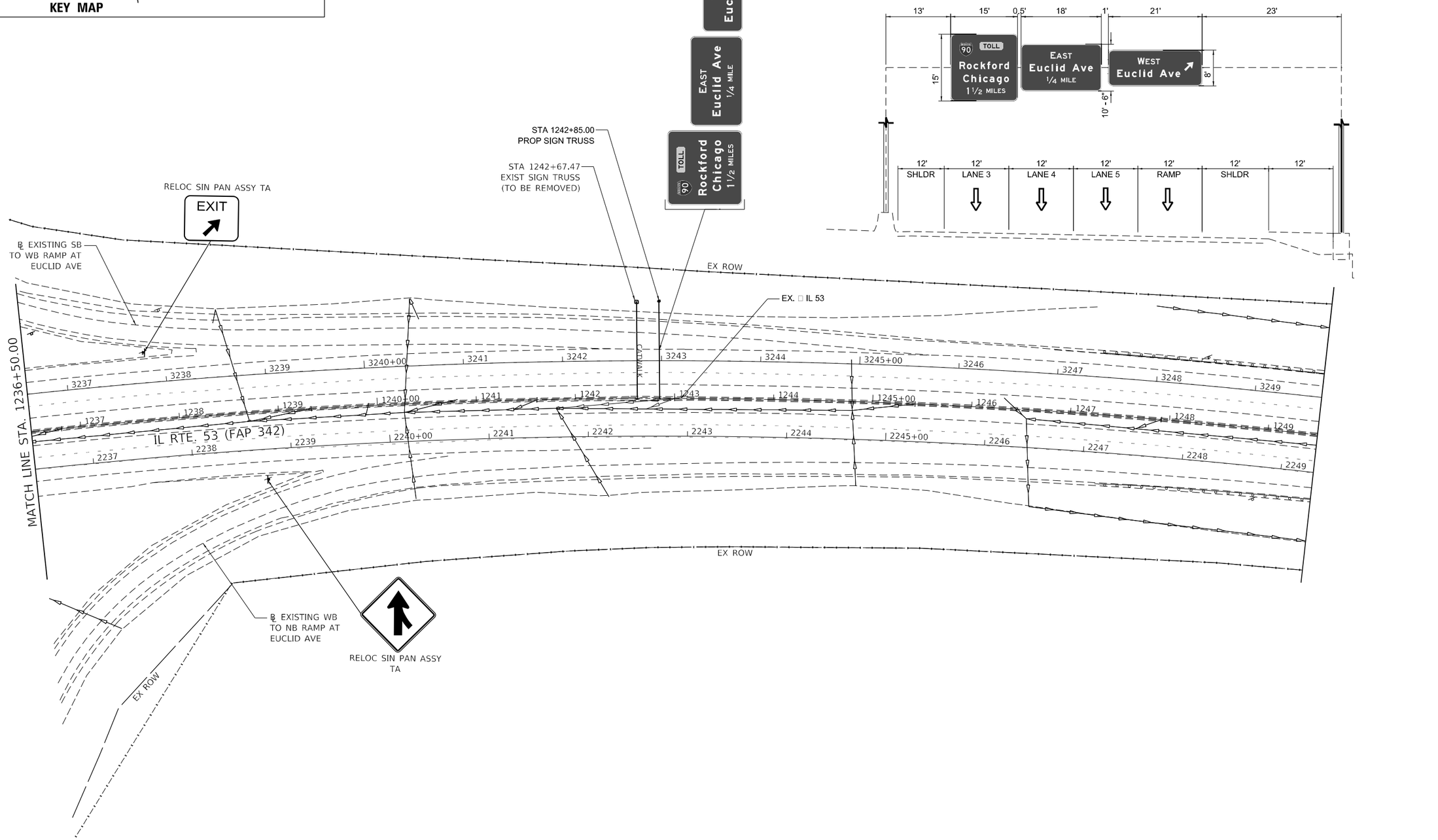

MODEL: Default
FILE NAME: G:\shortcut-targets-by-id\1GJ66R6RVnY4h8F5U-0C4UoNan3hmcA\192022-IDOT Strand Associates\Design\CADSheets\C3-D162N91-sht-signplan-12-IL53-PINalign

PIN POINT PRECISION ENGINEERING 1016 W. JACKSON BLVD. CHICAGO, ILLINOIS 60607 (312) 776-5591	USER NAME = Abdul Khalique	DESIGNED - AK	REVISED -	STATE OF ILLINOIS DEPARTMENT OF TRANSPORTATION	IL ROUTE 53 SIGNING PLAN	F.A.P. RTE.	SECTION	COUNTY	TOTAL SHEETS	SHEET NO.
		DRAWN - MMA	REVISED -			342	(531)BR 23	COOK	1211	447
	PLOT SCALE = 50.0000 ' / in.	CHECKED - AAS	REVISED -					CONTRACT NO. 62W38		
	PLOT DATE = 9/19/2024	DATE -	REVISED -		SCALE: 1" = 50' SHEET 5 OF 12 SHEETS STA. 1236+50.00 TO STA. 1249+50.00			ILLINOIS	FED. AID PROJECT	

N

0 50 100 150
SCALE IN FEET

EX ROW
COMMUTER DRIVE
UNION PACIFIC RAILROAD
US RTE. 14 (NORTHWEST HIGHWAY)
BOTTOM OF SLOPE (IMPACT FUNITED)
RELOC SIN PAN ASSY TA
℄ EXISTING SB ON RAMP AT US-14
NB IL 53 PGL
EX. ℄ IL 53
IL RTE. 53 (FAP 342)
SB IL 53 PGL
EX. ℄ US 14 (NORTHWEST HIGHWAY)
MATCH LINE STA. 1291+00.00

3277 3278 3279 3280+00 3281 3282 3283 3284 3285+00 3286 3287 3288 3289 3290+00 3291
1277 1278 1279 1280+00 1281 1282 1283 1284 1285+00 1286 1287 1288 1289 1290+00
2277 2278 2279 2280+00 2281 2282 2283 2284 2285+00 2286 2287 2288 2289 2290+00

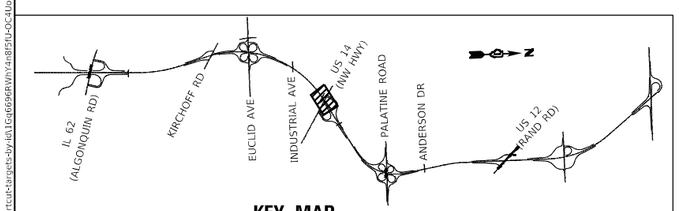

KEY MAP

MODEL: Default
FILE NAME: G:\shortcut-targets-shared\1Gt6696RWhY4n8f5U-OC4UqHam3Hmca1392022-IDOT_Strand_Associates\Design\CADD\Sheets\C43D162N91-sht-signplan-15-153-PN.dgn

PIN POINT PRECISION ENGINEERING
1016 W. JACKSON BLVD.
CHICAGO, ILLINOIS 60607
(312) 776-5591

USER NAME = Abdul Khalique	DESIGNED - AK	REVISED -	
	DRAWN - MMA	REVISED -	
PLOT SCALE = 50.0000 ' / in.	CHECKED - AAS	REVISED -	
PLOT DATE = 8/23/2024	DATE -	REVISED -	

STATE OF ILLINOIS
DEPARTMENT OF TRANSPORTATION

IL ROUTE 53
SIGNING PLAN

SCALE: 1" = 50' | SHEET 6 OF 12 SHEETS | STA. 1276+50.00 TO STA. 1291+00.00

F.A.P. RTE.	SECTION	COUNTY	TOTAL SHEETS	SHEET NO.
342	(531)BR 23	COOK	1211	448
		CONTRACT NO. 62W38		
		ILLINOIS	FED. AID PROJECT	

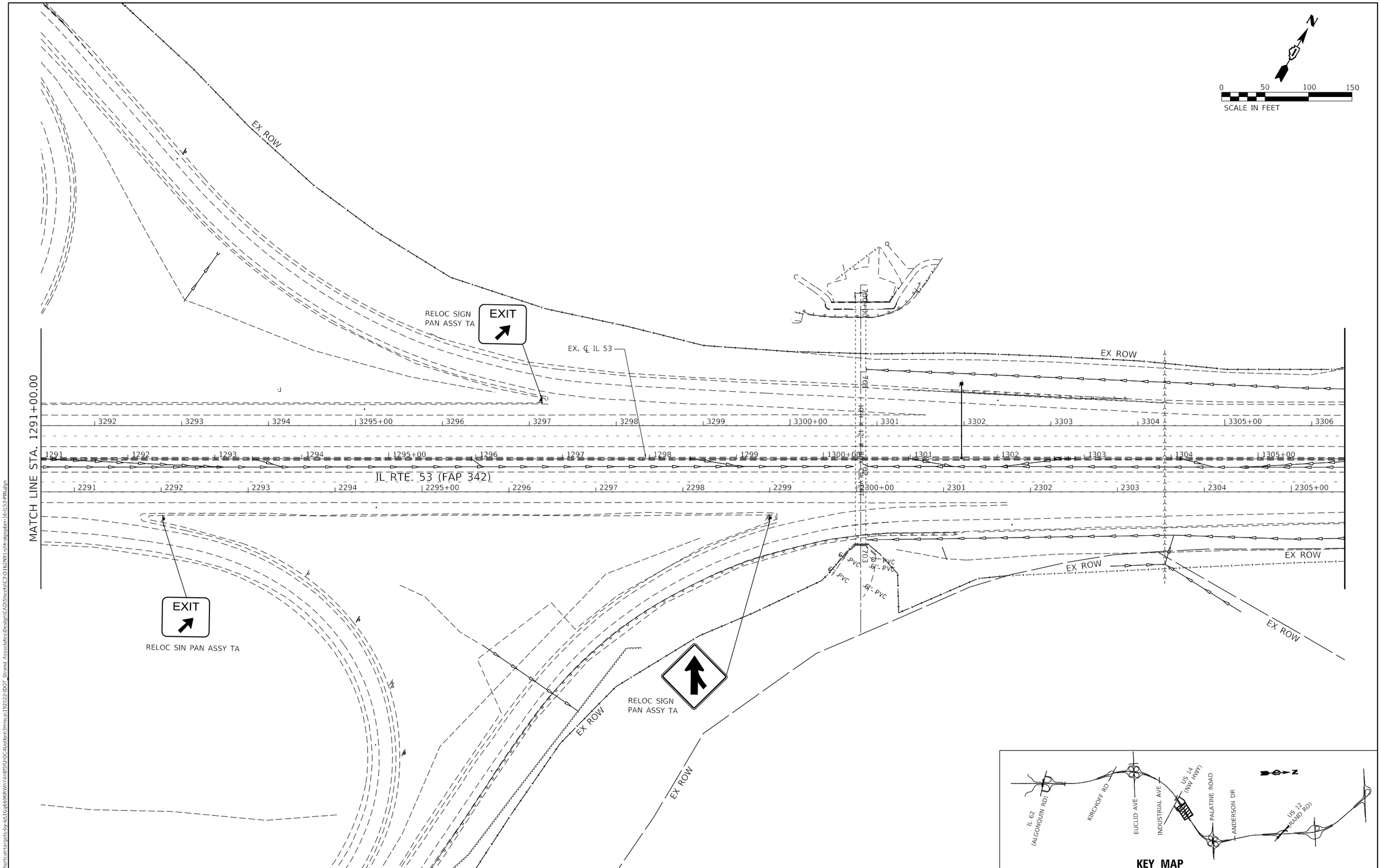

MODEL: Default
FILE NAME: C:\shortcut-targets-by-id\1Gp6696RVdnY4n8F5U-OC4uotlan3hmca\192022-IDOT_Strand_Associates\Design\CADSheets\C3-D162N91-sht-signplan-1-IL53-PN.dgn

PIN POINT PRECISION ENGINEERING
1016 W. JACKSON BLVD.
CHICAGO, ILLINOIS 60607
(312) 776-5591

USER NAME = Abdul Khalique	DESIGNED - AK	REVISED -	
	DRAWN - MMA	REVISED -	
PLOT SCALE = 50.0000 ' / in.	CHECKED - AAS	REVISED -	
PLOT DATE = 8/23/2024	DATE -	REVISED -	

STATE OF ILLINOIS
DEPARTMENT OF TRANSPORTATION

IL ROUTE 53
SIGNING PLAN

SCALE: 1" = 50' | SHEET 7 OF 12 SHEETS | STA. 1291+00.00 TO STA. 1306+00.00

F.A.P. RTE.	SECTION	COUNTY	TOTAL SHEETS	SHEET NO.
342	(531)BR 23	COOK	1211	449
		CONTRACT NO. 62W38		
		ILLINOIS	FED. AID PROJECT	

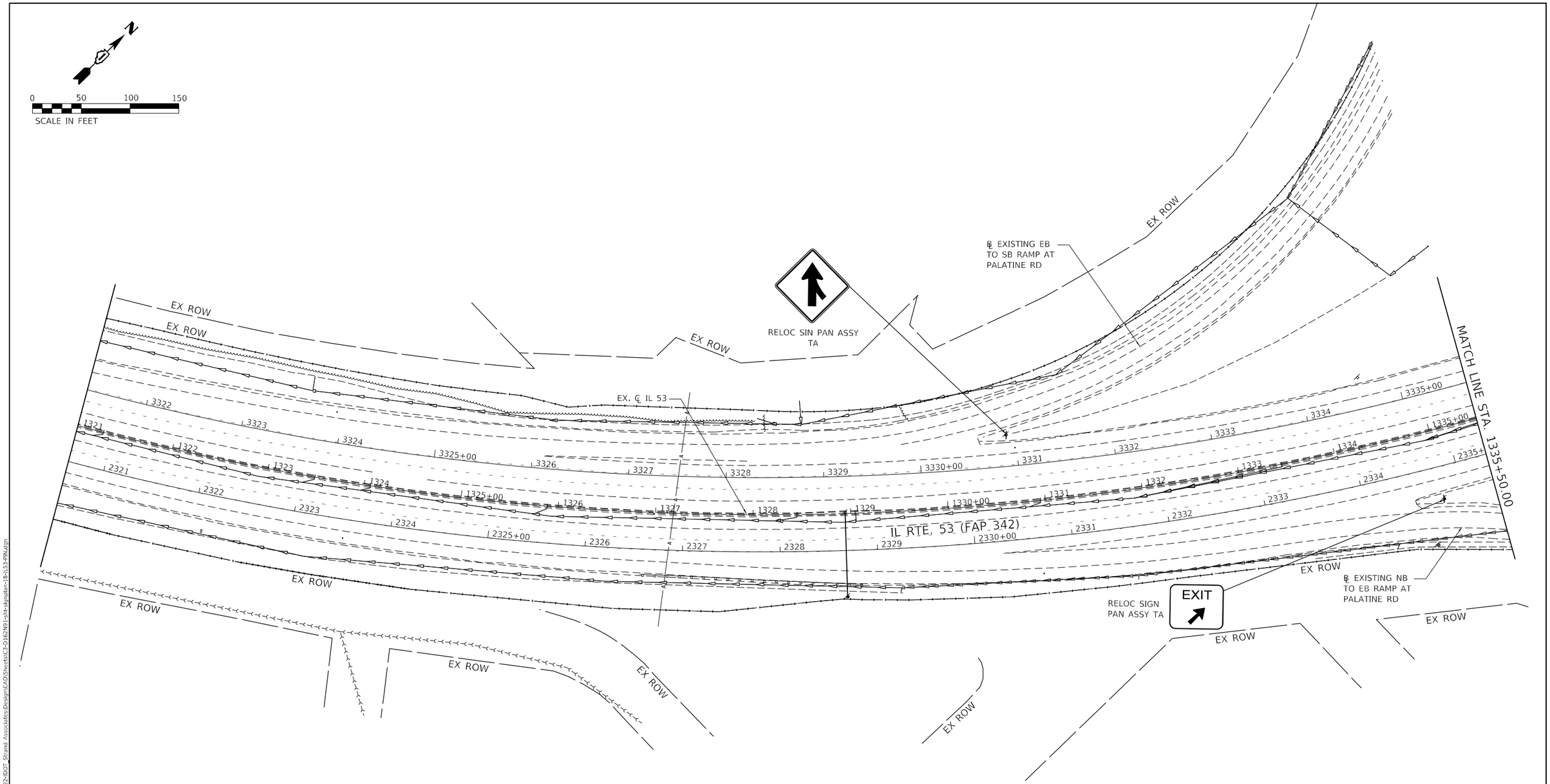

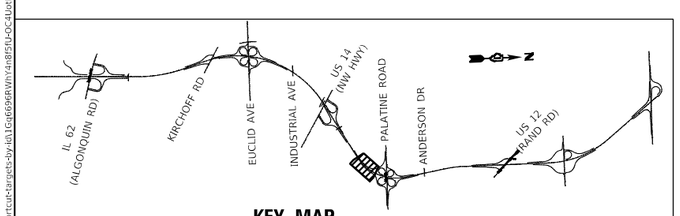

KEY MAP

MODEL: Default
FILE NAME: G:\shortcut-targets-by-id\1Gp6696RWh74n8fSU-OC4Uo9anl3hmca\192022-IDOT_Strand_Associates\Design\CAD\Sheets\C3-D162N91-sht-signplan-18-IL53-PIN.dgn

PIN POINT PRECISION ENGINEERING
1016 W. JACKSON BLVD.
CHICAGO, ILLINOIS 60607
(312) 776-5591

USER NAME = Abdul Khalique	DESIGNED - AK	REVISED -	
	DRAWN - MMA	REVISED -	
PLOT SCALE = 50.0000 ' / in.	CHECKED - AAS	REVISED -	
PLOT DATE = 8/23/2024	DATE -	REVISED -	

STATE OF ILLINOIS
DEPARTMENT OF TRANSPORTATION

IL ROUTE 53
SIGNING PLAN

SCALE: 1" = 50' | SHEET 8 OF 12 SHEETS | STA. 1321+00.00 TO STA. 1335+50.00

F.A.P. RTE.	SECTION	COUNTY	TOTAL SHEETS	SHEET NO.
342	(531)BR 23	COOK	1211	450
		CONTRACT NO. 62W38		
		ILLINOIS	FED. AID PROJECT	

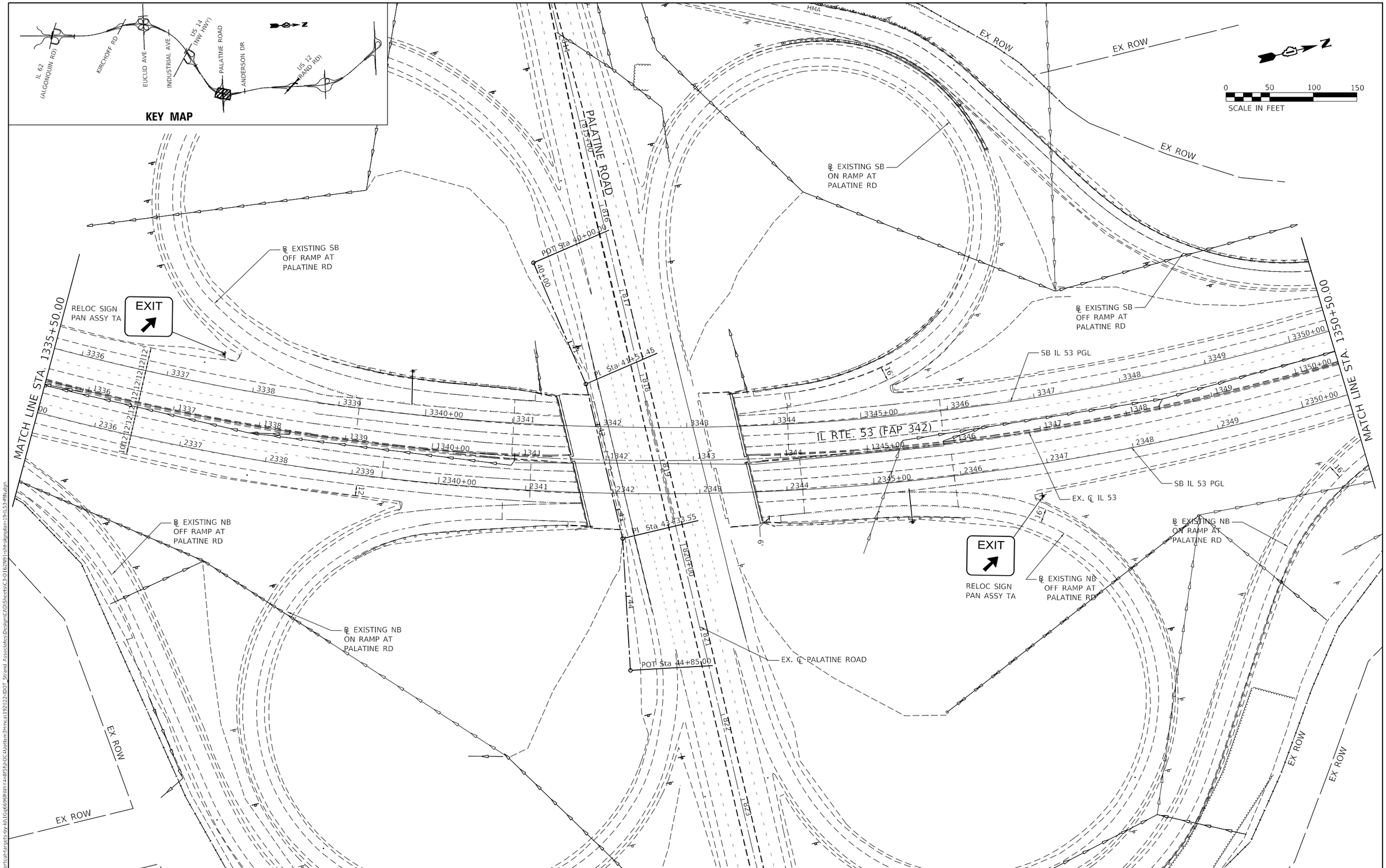

MODEL: Default
FILE NAME: G:\shortcut-targets-by-id\1Gp6696RWn4n8fSfU-OC4UoNan3hmcaJ192022-IDOT_Strand_Associates\Design\CAD\Sheets\C3-D162N91-sht-signplan-19-IL53-PIN.dgn

PIN POINT ENGINEERING
1016 W. JACKSON BLVD.
CHICAGO, ILLINOIS 60607
(312) 776-5591

USER NAME = Abdul Khalique	DESIGNED - AK	REVISED -	
	DRAWN - MMA	REVISED -	
PLOT SCALE = 50.0000 ' / in.	CHECKED - AAS	REVISED -	
PLOT DATE = 8/23/2024	DATE -	REVISED -	

STATE OF ILLINOIS
DEPARTMENT OF TRANSPORTATION

IL ROUTE 53
SIGNING PLAN

SCALE: 1" = 50' | SHEET 9 OF 12 SHEETS | STA. 1335+50.00 TO STA. 1350+50.00

F.A.P. RTE.	SECTION	COUNTY	TOTAL SHEETS	SHEET NO.
342	(531)BR 23	COOK	1211	451
		CONTRACT NO. 62W38		
		ILLINOIS	FED. AID PROJECT	

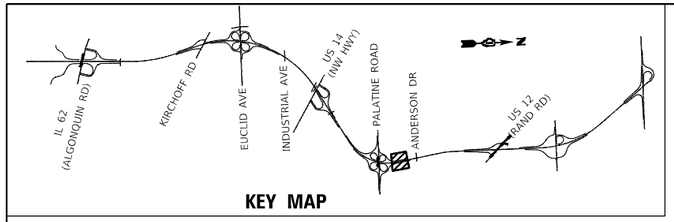

KEY MAP

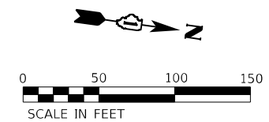

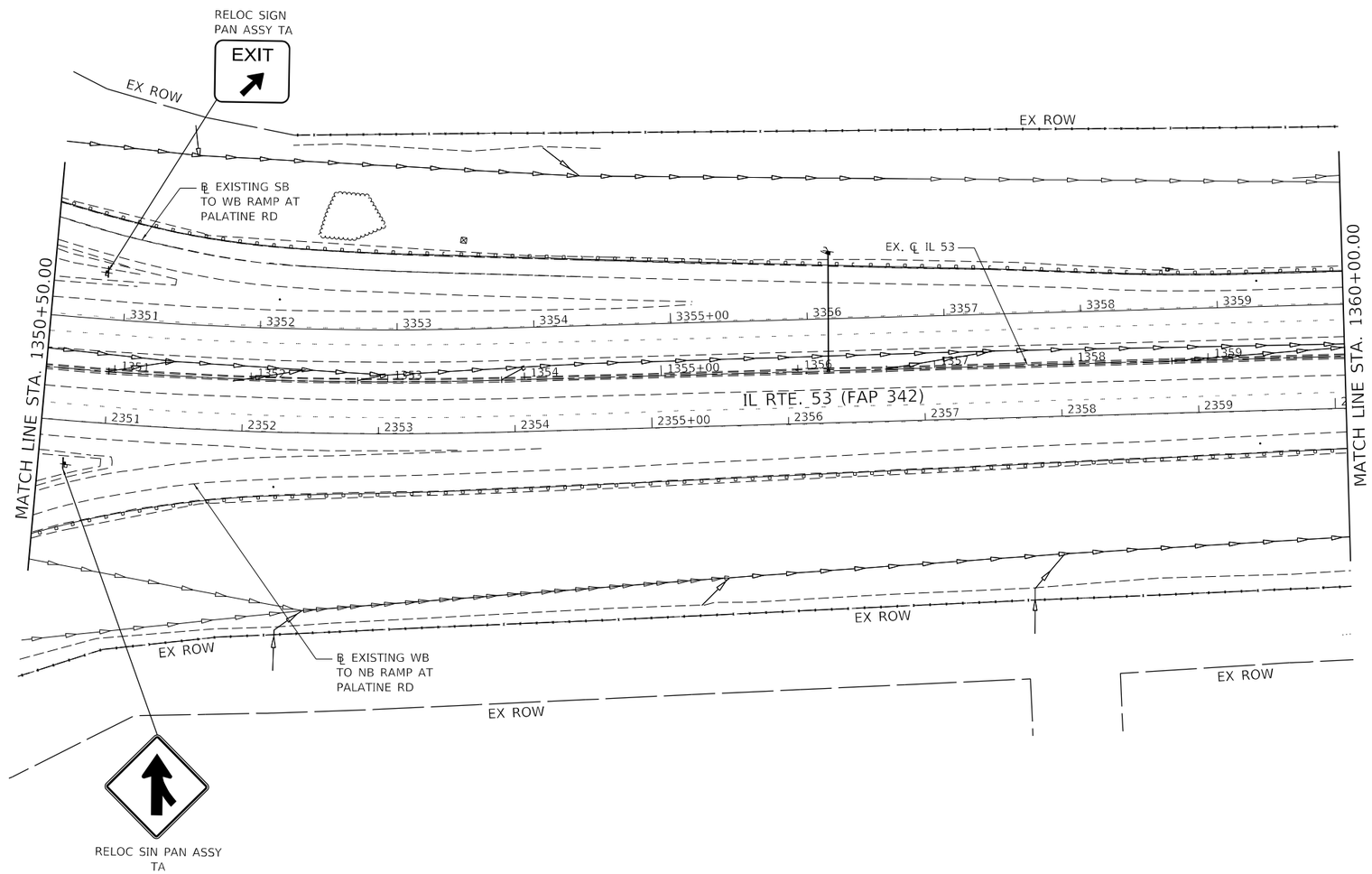

MODEL: Default
FILE NAME: G:\shortcut-targets-by-id\1Gd6696RWnY4i8f5fU-0C4UotNm3Hmcs\192022-IDOT_Strand Associates\Design\CADSheets\C3-D162N91-sht-signplan-20-IL53-PIN.dgn

PIN POINT PRECISION ENGINEERING
1016 W. JACKSON BLVD.
CHICAGO, ILLINOIS 60607
(312) 776-5591

USER NAME = Abdul Khalique	DESIGNED - AK	REVISED -
	DRAWN - MMA	REVISED -
PLOT SCALE = 50.0000 ' / in.	CHECKED - AAS	REVISED -
PLOT DATE = 8/23/2024	DATE -	REVISED -

STATE OF ILLINOIS
DEPARTMENT OF TRANSPORTATION

IL ROUTE 53
SIGNING PLAN

SCALE: 1" = 50' | SHEET 10 OF 12 SHEETS | STA. 1350+50.00 TO STA. 1360+00.00

F.A.P. RTE.	SECTION	COUNTY	TOTAL SHEETS	SHEET NO.
342	(531)BR 23	COOK	1211	452
		CONTRACT NO. 62W38		
		ILLINOIS	FED. AID PROJECT	

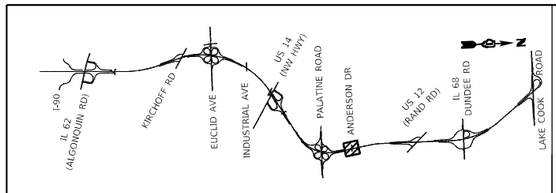

KEY MAP

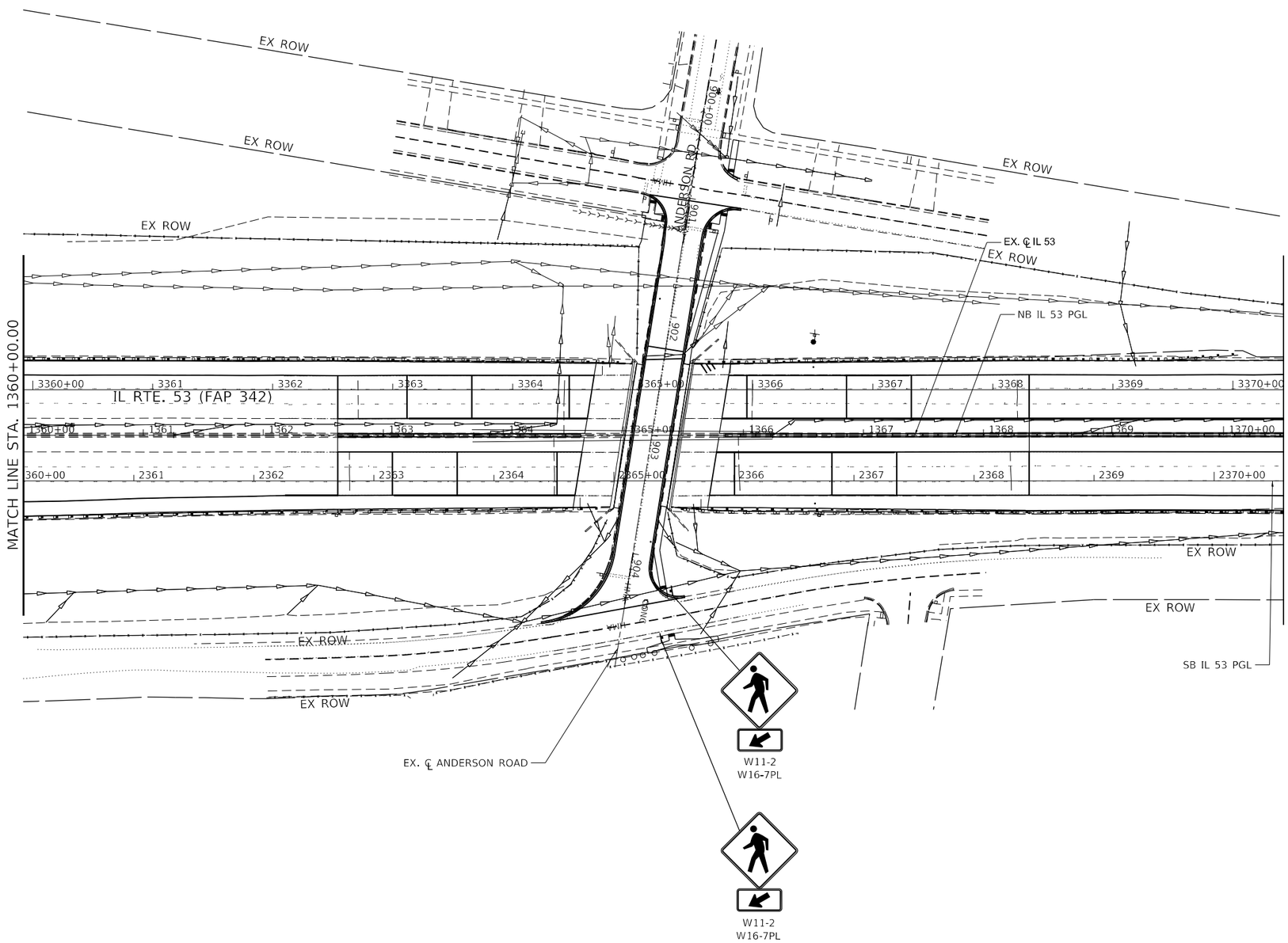

MODEL: Default
FILE NAME: G:\shortcut-targets-by-id\1Gq669RWn4n8f5U-OC4Uo9Jam3hmca1920/22-IDOT_Strand_Associates\Design\CADd\Sheets\C3-0162N91-sht-signplan-21-IL53-PRL.dgn

PIN POINT DESIGN ENGINEERING
1016 W. JACKSON BLVD.
CHICAGO, ILLINOIS 60607
(312) 776-5591

USER NAME = Abdul Khalique	DESIGNED - AK	REVISED -	
	DRAWN - MMA	REVISED -	
PLOT SCALE = 50.0000 ' / in.	CHECKED - AAS	REVISED -	
PLOT DATE = 8/23/2024	DATE -	REVISED -	

STATE OF ILLINOIS
DEPARTMENT OF TRANSPORTATION

IL ROUTE 53
SIGNING PLAN

SCALE: 1" = 50' | SHEET 11 OF 12 SHEETS | STA. 1360+00.00 TO STA. 1370+50.00

F.A.P. RTE.	SECTION	COUNTY	TOTAL SHEETS	SHEET NO.
342	(531)BR 23	COOK	1211	453
		CONTRACT NO. 62W38		
		ILLINOIS	FED. AID PROJECT	

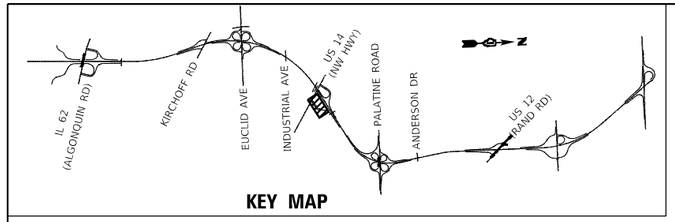

KEY MAP

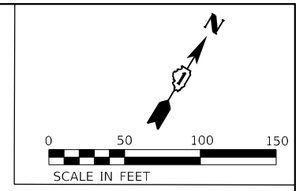

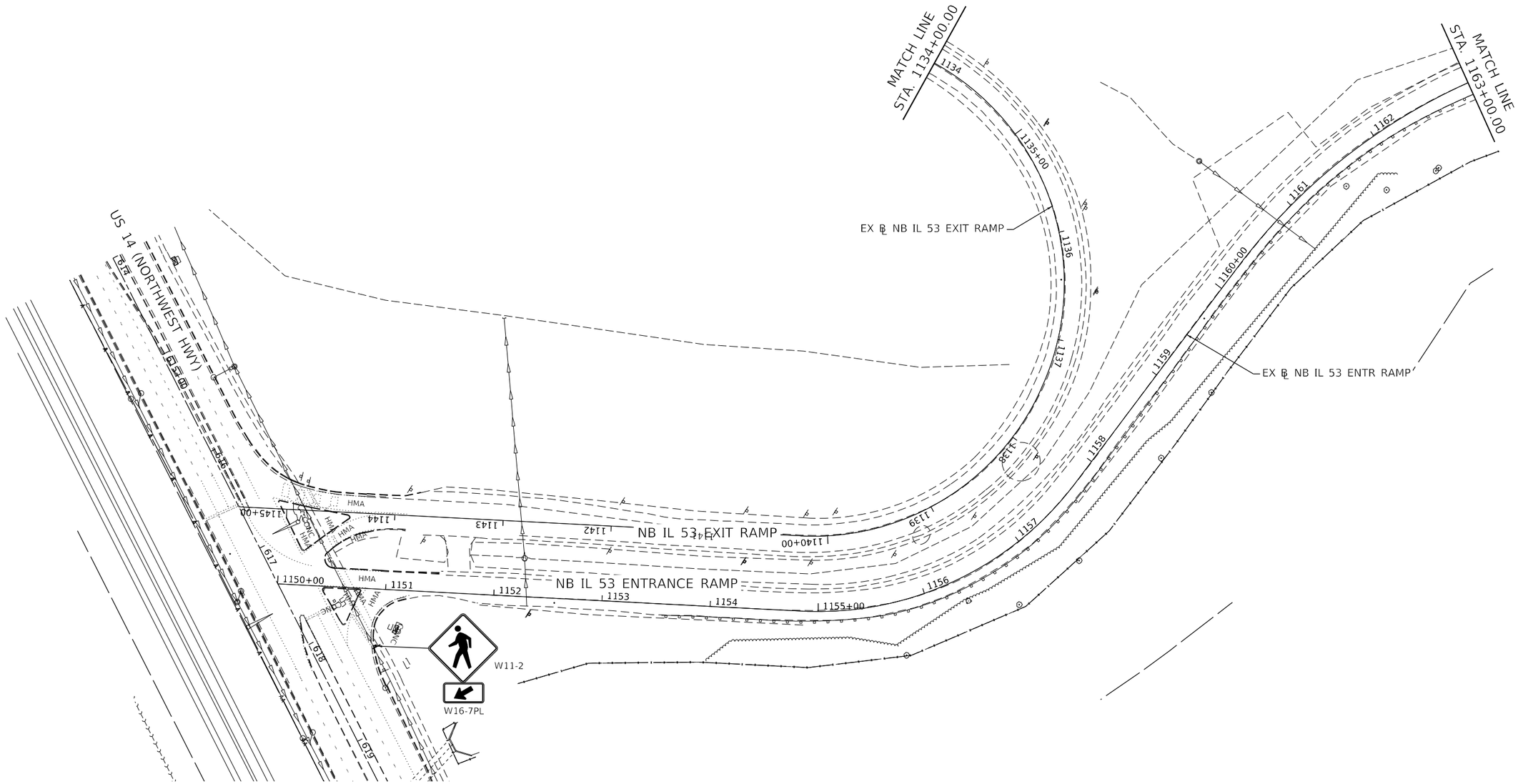

MODEL: Default
FILE NAME: G:\shortcut-targets-by-id\1Gq66R6WhYa-8F5U-0C4Uo8tm3Hmcs\192022-IDOT Strand Associates\Design\CAD\Sheets\C3-0162N91-sht-bpnplan-2-IL53-PlkRamp.dgn

PIN POINT PRECISION ENGINEERING
1016 W. JACKSON BLVD.
CHICAGO, ILLINOIS 60607
(312) 776-5591

USER NAME = Abdul Khalique	DESIGNED - AK	REVISED -	
	DRAWN - MMA	REVISED -	
PLOT SCALE = 50.0000 ' / in.	CHECKED - AAS	REVISED -	
PLOT DATE = 8/23/2024	DATE -	REVISED -	

STATE OF ILLINOIS
DEPARTMENT OF TRANSPORTATION

IL ROUTE 53
SIGNING PLAN

SCALE: 1" = 50' | SHEET 12 OF 12 SHEETS | STA. | TO STA.

F.A.P. RTE.	SECTION	COUNTY	TOTAL SHEETS	SHEET NO.
342	(531)BR 23	COOK	1211	454
		CONTRACT NO. 62W38		
		ILLINOIS	FED. AID PROJECT	

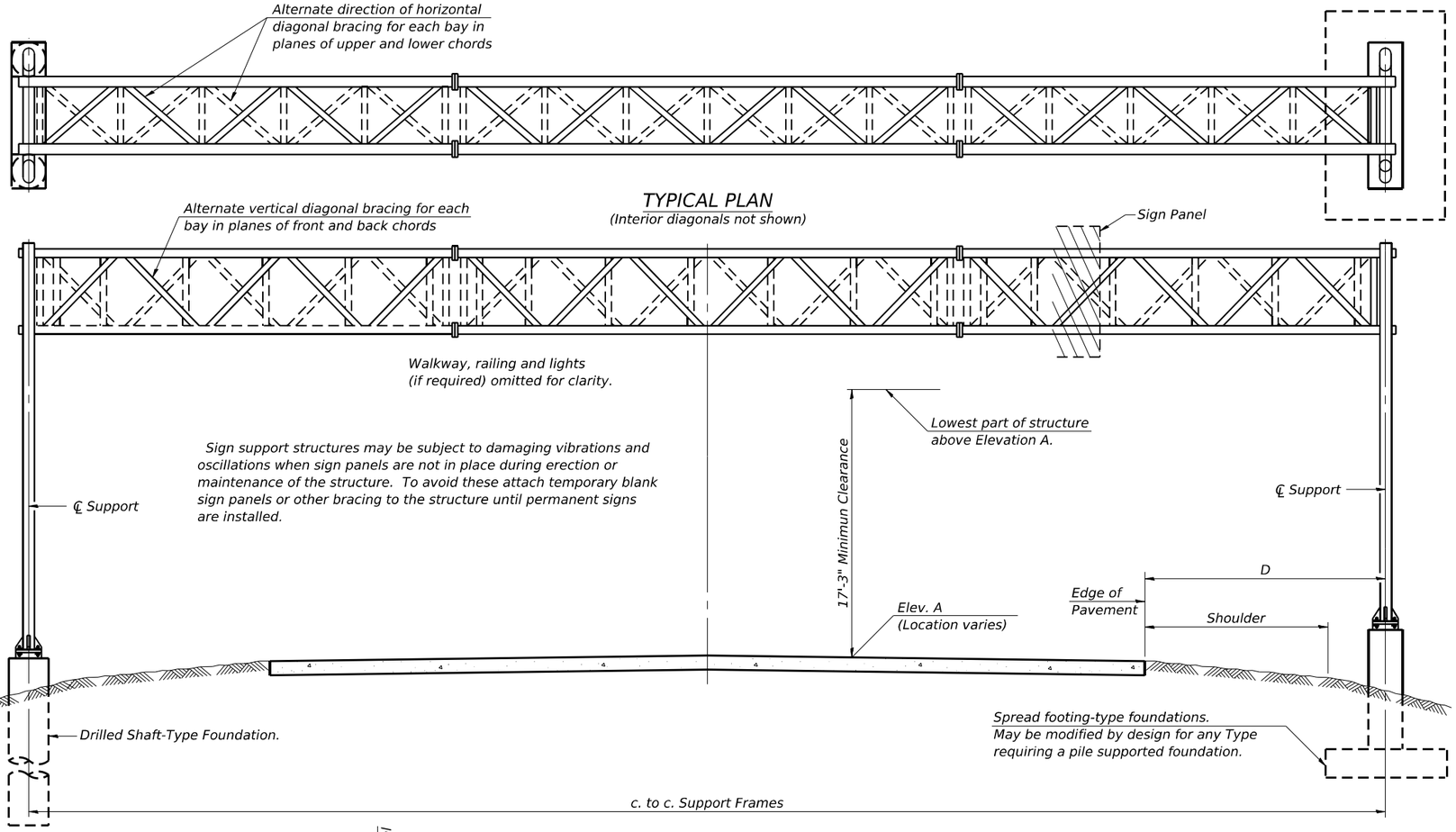

TYPICAL PLAN

(Interior diagonals not shown)

TYPICAL ELEVATION

(Looking at Face of Signs**)

Elev. A = Elevation at point of minimum clearance to sign, walkway support or truss.

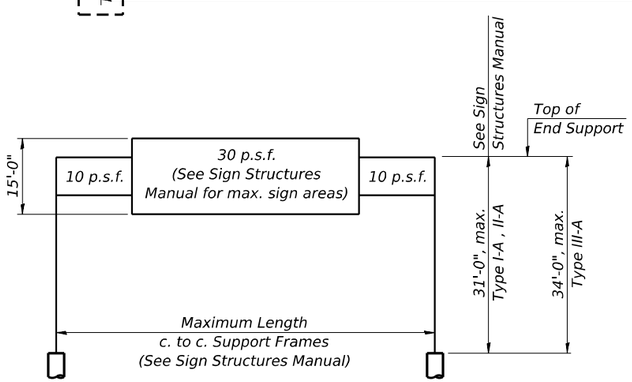

DESIGN WIND LOADING DIAGRAM

Parameters shown are basis for I.D.O.T. Standards and Sign Manual Tables. Installations not within dimensional limits shown require special analysis for all components.

Structure Number	Station	Design Truss Type	c. to c. Supports	Elev. A	Dim. D	Height of Tallest Sign	Total Sign Area
1S016S053R000.0-006	1188+25.00	II-A	82'	731.97	18'	14'-0"	642 SF
1S016S053L000.0-002	1191+50.00	I-A	86'	733.31	22'	10'-6"	300 SF
1S016S053R000.0-005	1242+85.00	I-A	98'	732.86	34'	15'-0"	579 SF

** Looking upstation for structures with signs both sides.

* If M270 Gr. 50W (M222) steel is proposed, chemistry for plate to be used shall first be approved by the Engineer as suitable for galvanizing and welding.

GENERAL NOTES

DESIGN: AASHTO Standard Specifications for Structural Supports for Highway Signs, Luminaires and Traffic Signals. ("AASHTO Specifications")

CONSTRUCTION: Current (at time of letting) Illinois Department of Transportation Standard Specifications for Road and Bridge Construction, Supplemental Specifications and Special Provisions. ("Standard Specifications")

LOADING: 90 M.P.H. WIND VELOCITY

WALKWAY LOADING: Dead load plus 500 lbs. concentrated live load.

DESIGN STRESSES:
Field Units
f'c = 3,500 p.s.i.
fy = 60,000 p.s.i. (reinforcement)

WELDING: All welds to be continuous unless otherwise shown. All welding to be done in accordance with current AWS D1.1 and D1.2 Structural Welding Codes (Steel and Aluminum) and the Standard Specificiations.

MATERIALS: Aluminum Alloys as shown throughout plans. All Structural Steel Pipe shall be ASTM A53 Grade B or A500 Grade B or C. If A500 pipe is substituted for A53, then the outside diameter shall be as detailed and wall thickness greater than or equal to A53. All Structural Steel Plates and Shapes shall conform to AASHTO M270 Gr. 36, Gr. 50 or Gr. 50W*. Stainless steel for shims, sleeves and handhole covers shall be ASTM A240, Type 302 or 304, or another alloy suitable for exterior exposure and acceptable to the Engineer.
The steel pipe and stiffening ribs at the base plate for the column shall have a minimum longitudinal Charpy V-Notch (CVN) energy of 15 lb.-ft. at 40° F. (Zone 2) before galvanizing.

FASTENERS FOR ALUMINUM TRUSSES: All bolts noted as "high strength" must satisfy the requirements of AASHTO M164 (ASTM A325), or approved alternate, and must have matching lock nuts. Threaded studs for splices (if Members interfere) must satisfy the requirements of ASTM A449, ASTM A193, Grade B7, or approved alternate, and must have matching lock nuts. Bolts and lock nuts not required to be high strength must satisfy the requirements of ASTM A307. All bolts and lock nuts must be hot dip galvanized per AASHTO M232. The lock nuts must have nylon or steel inserts. A stainless steel flat washer conforming to ASTM A240 Type 302 or 304, is required under both head and nut or under both nuts where threaded studs are used. High strength bolt installation shall conform to Article 505.04 (f) (2)d of the IDOT Standard Specifications for Road and Bridge Construction. Rotational capacity ("ROCAP") testing of bolts will not be required.

U-BOLTS AND EYEBOLTS: U-Bolts and Eyebolts must be produced from ASTM A276 Type 304, 304L, 316 or 316L, Condition A, cold finished stainless steel, or an equivalent material acceptable to the Engineer. All nuts for U-Bolts and Eyebolts must be lock nuts equivalent to ASTM A307 with nylon or steel inserts and hot dip galvanized per AASHTO M232. A stainless steel flat washer conforming to ASTM A240, Type 302 or 304, is required under each U-Bolt and Eyebolt lock nut.

GALVANIZING: All Steel Grating, Plates, Shapes and Pipe shall be Hot Dip Galvanized after fabrication in accordance with AASHTO M111. Painting is not permitted.

ANCHOR RODS: Shall conform to ASTM F1554 Gr. 105.

CONCRETE SURFACES: All concrete surfaces above an elevation 6" below the lowest final ground line at each foundation shall be cleaned and coated with Concrete Sealer in accordance with the Standard Specifications.

REINFORCEMENT BARS: Reinforcement Bars designated (E) shall be epoxy coated in accordance with the Standard Specifications.

FOUNDATIONS: The contract unit price for Concrete Foundations and Drilled Shaft Concrete Foundations shall include reinforcement bars complete in place.

TOTAL BILL OF MATERIAL

ITEM	UNIT	TOTAL
OVERHEAD SIGN STRUCTURE SPAN TYPE I-A	FOOT	184
OVERHEAD SIGN STRUCTURE SPAN TYPE II-A	FOOT	82
DRILLED SHAFT CONCRETE FOUNDATIONS	Cu. Yds.	97

OS-A-1 5-15-2023

STRAND ASSOCIATES
1170 SOUTH HOUBOLT ROAD
JOLIET, ILLINOIS 60431
(815) 744-4200

USER NAME = tylerhe	DESIGNED - TCH	REVISED -	
	DRAWN - DJW	REVISED -	
PLOT SCALE = 0.1667 ' / in.	CHECKED - MAG	REVISED -	
PLOT DATE = 9/26/2024	DATE - 7/25/2024	REVISED -	

STATE OF ILLINOIS
DEPARTMENT OF TRANSPORTATION

OVERHEAD SIGN STRUCTURES - GENERAL PLAN & ELEVATION - ALUMINUM TRUSS & STEEL SUPPORTS

SCALE: SHEET 1 OF 10 SHEETS STA. TO STA.

F.A.P. RTE.	SECTION	COUNTY	TOTAL SHEETS	SHEET NO.
342	(531) BR 23	COOK	1357	453
		CONTRACT NO. 62W38		
		ILLINOIS	FED. AID PROJECT	

MODEL: Default
FILE NAME: S:\JOB\6300-6399\6346\13\Drawings\CAD\Microstation\CAD_Sheets\C13-0162N91-sht-sign structure details-SA.dgn

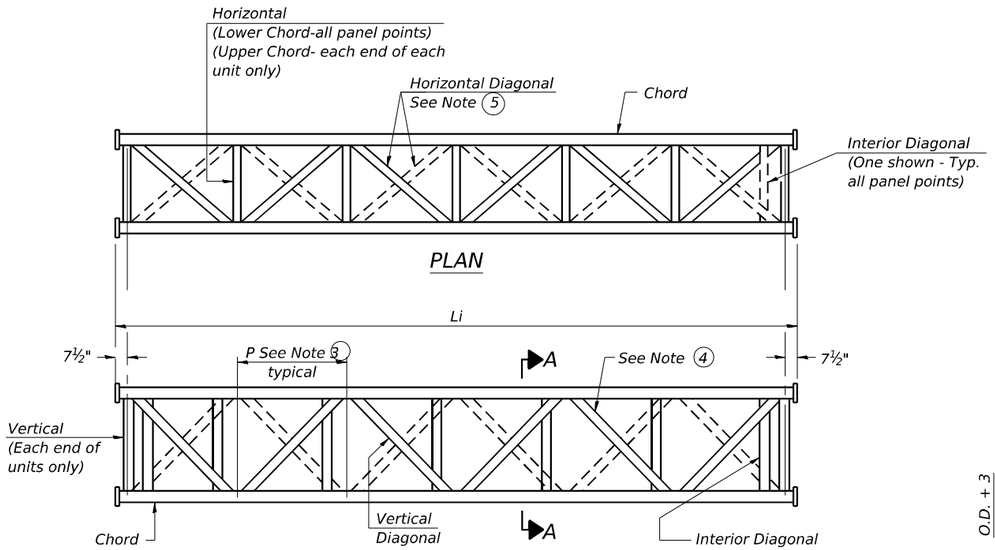

ELEVATION
TYPICAL INTERIOR UNIT

Even number of panels/interior unit required.

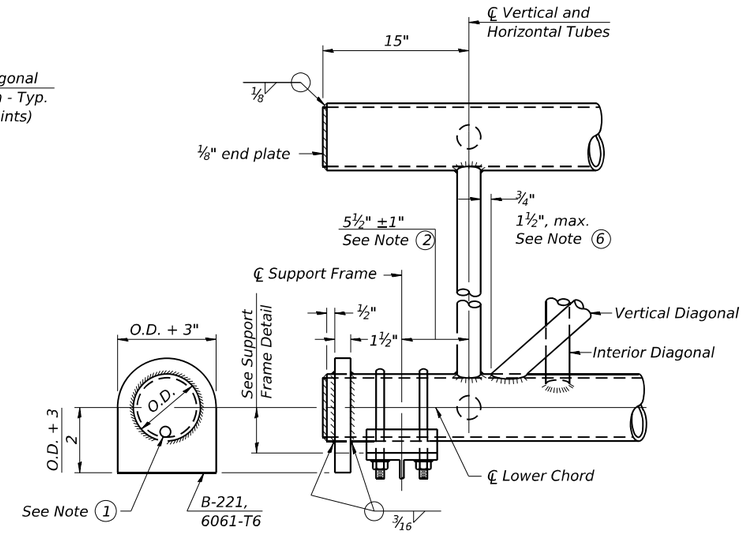

SUPPORT END DETAIL FOR EXTERIOR UNIT

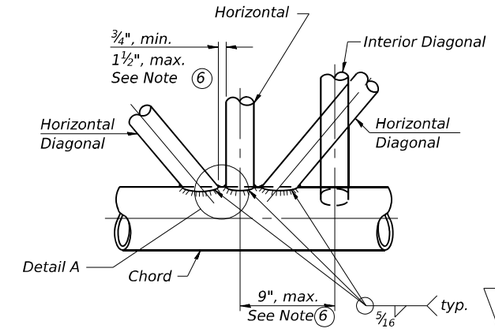

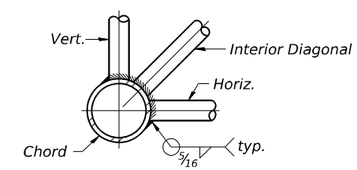

TYPICAL JOINT DETAILS

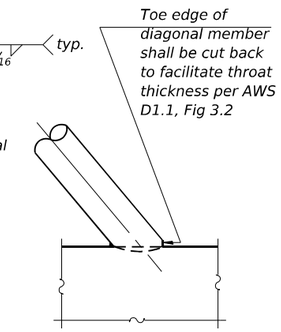

DETAIL A

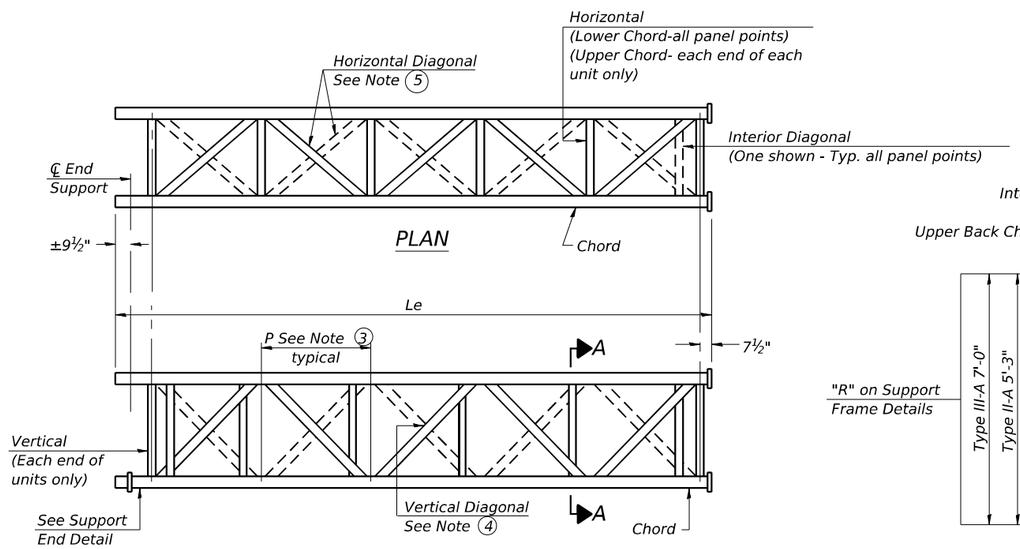

ELEVATION
TYPICAL EXTERIOR UNIT

Even or odd number of panels/exterior units allowed.

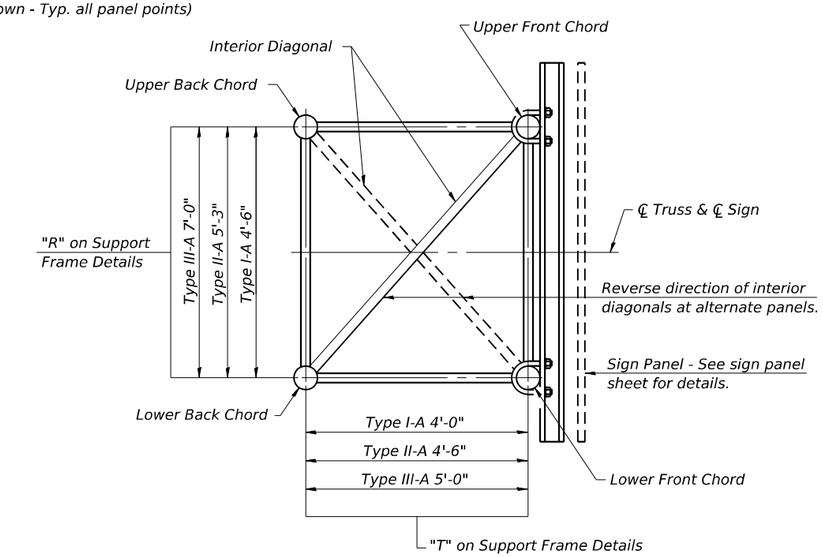

SECTION A-A

1. Contractor may alternatively use standard aluminum drive-fit cap to close end. ½" Ø drain hole in end plate/drive-fit cap. (Typ. at ends of all chords)
2. 5½" end dimension may vary by ±1" to provide uniform panel spacing (P).
3. Panel spacing (P) shall be uniform for entire truss and between 4'-0" and 5'-0" for Type I-A or 4'-0" and 5'-6" for Types II-A and III-A.
4. Vertical Diagonals in front and back face shall alternate.
5. Hidden lines show wind bracing alternates direction between planes of top and bottom chords.
6. All diagonals shall be detailed for minimum offset from the panel point based on the following: Offset shall be such as to provide a ¾" minimum to 1½" maximum clearance between any diagonal and any horizontal or vertical member, and to provide clearance for U-bolt connections of signs or walkway brackets.

OS-A-2 5-15-2023

STRAND ASSOCIATES®
1170 SOUTH HOUBOLT ROAD
JOLIET, ILLINOIS 60431
(815) 744-4200

USER NAME = tylerhe	DESIGNED - TCH	REVISED -	
	DRAWN - DJW	REVISED -	
PLOT SCALE = 0.1667 ' / in.	CHECKED - MAG	REVISED -	
PLOT DATE = 9/26/2024	DATE - 7/25/2024	REVISED -	

STATE OF ILLINOIS
DEPARTMENT OF TRANSPORTATION

OVERHEAD SIGN STRUCTURES - ALUMINUM TRUSS
DETAILS FOR TRUSS TYPES I-A, II-A AND III-A

SCALE: SHEET 2 OF 10 SHEETS STA. TO STA.

F.A.P. RTE.	SECTION	COUNTY	TOTAL SHEETS	SHEET NO.
342	(531) BR 23	COOK	1357	454
		CONTRACT NO. 62W38		
	ILLINOIS	FED. AID PROJECT		

MODEL: Default
FILE NAME: S:\DL\6300-6399\6346113\Drawings\CADd\Micro-SSA\CAD_Sheets\C3-D162N91-sht-sign structure details-SAL.dgn

TRUSS UNIT TABLE

Structure Number	Station	Design Truss Type	Exterior Units (2)			Interior Unit				Upper & Lower Chord		Verticals; Horizontals; Vertical; Horizontal, and Interior Diagonals		Camber at Midspan	Splicing Flange					
			No. Panels per Unit	Unit Lgth. (Le)	Panel Lgth. (P)	No. Req'd.	No. Panels per Unit	Unit Lgth. (Li)	Panel Lgth. (P)	O.D.	Wall	O.D.	Wall		Bolts		Weld Sizes		A	B
															No./Splice	Dia.	W	W1		
1S016S053R000.0-006	1188+25.00	II-A	5	26'-5 1/2"	4'-11"	1	6	30'-9"	4'-11"	5 1/2"	5/16"	3"	5/16"	2 1/16"	6	7/8"	3/8"	1/4"	9 1/4"	12 1/4"
1S016S053L000.0-002	1191+50.00	I-A	6	29'-4 1/2"	4'-7"	1	6	28'-9"	4'-7"	5"	5/16"	2 1/2"	5/16"	2 9/16"	6	7/8"	5/16"	1/4"	8 3/4"	11 3/4"
1S016S053R000.0-005	1242+85.00	I-A	7	34'-11 3/4"	4'-8 3/4"	1	6	29'-7 1/2"	4'-8 3/4"	5 1/2"	5/16"	2 1/2"	5/16"	3 1/8"	6	7/8"	3/8"	1/4"	9 1/4"	12 1/4"

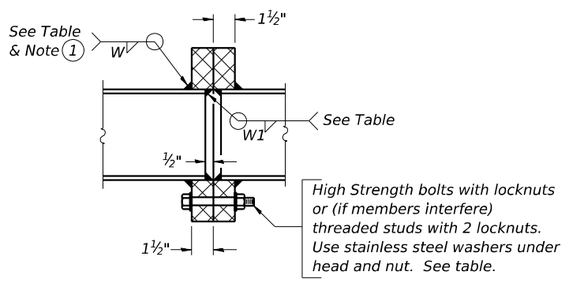

SECTION B-B

1 Splicing Flanges shall be attached to each truss unit with the truss shop assembled to camber shown. Truss units shall be in proper alignment and flange surfaces shall be shop bolted into full contact before welding. Sufficient external welds or tacks shall be made to secure flanges until remaining welds are made after disassembly. Adjacent flanges shall be "match marked" to insure proper field assembly.

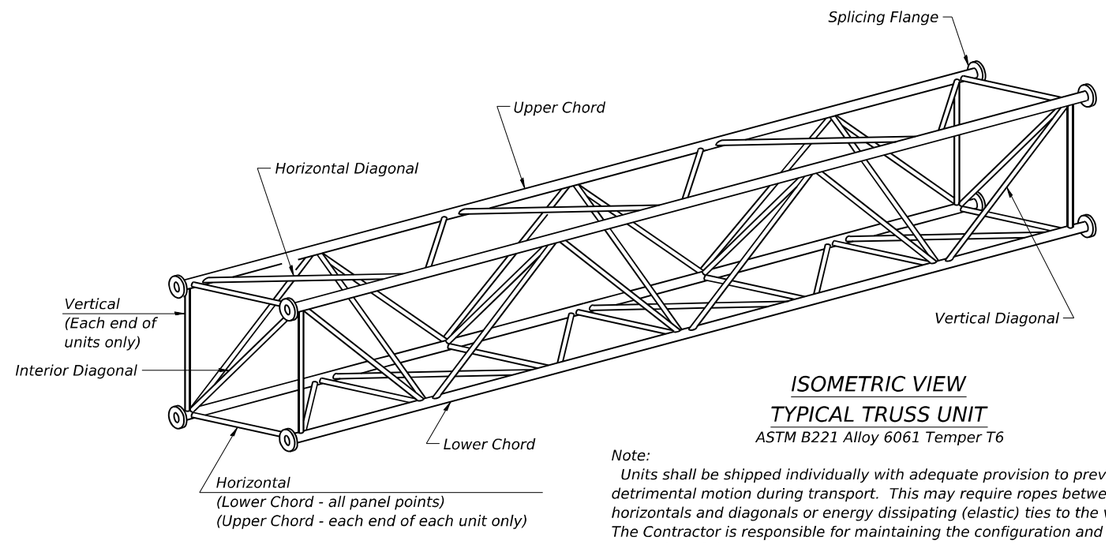

ISOMETRIC VIEW
TYPICAL TRUSS UNIT

ASTM B221 Alloy 6061 Temper T6

Note:
Units shall be shipped individually with adequate provision to prevent detrimental motion during transport. This may require ropes between horizontals and diagonals or energy dissipating (elastic) ties to the vehicle. The Contractor is responsible for maintaining the configuration and protection of the units.

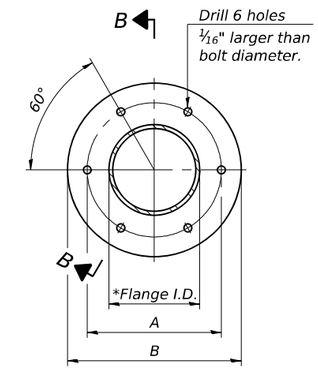

TRUSS TYPES I-A, II-A, & III-A

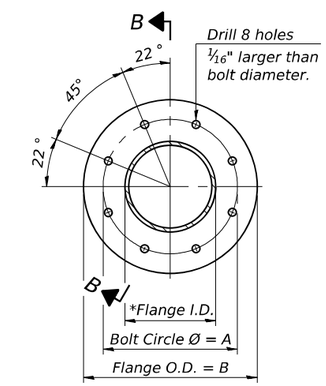

TRUSS TYPES II-A & III-A

SPLICING FLANGES

ASTM B221, Alloy 6061-T6
or ASTM B209, Alloy 6061-T651
*To fit O.D. of Chord with maximum gap of 1/16".

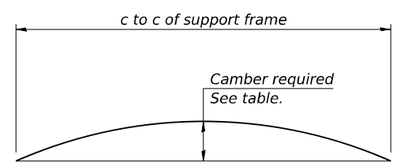

CAMBER DIAGRAM

Camber curve shown is theoretical. Actual camber attained by slope changes at splices between units.

CAMBER ATTAINMENT EXAMPLES:

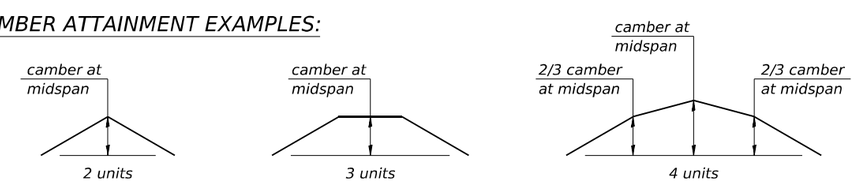

Camber shown is for fabrication only, measured with truss fully supported. (No-load condition)

OS4-A-2 5-15-2023

MODEL: Default
FILE NAME: S:\JOB\6300-6399\6346\13\Drawings\CADMicro-SSA\CAD Sheets\C3-D162N91-int-sign structure details-SAL.dgn

STRAND ASSOCIATES
1170 SOUTH HOUBOLT ROAD
JOLIET, ILLINOIS 60431
(815) 744-4200

USER NAME = tylerhe	DESIGNED - TCH	REVISED -	
	DRAWN - DJW	REVISED -	
PLOT SCALE = 0.1667 ' / in.	CHECKED - MAG	REVISED -	
PLOT DATE = 9/26/2024	DATE - 7/25/2024	REVISED -	

STATE OF ILLINOIS
DEPARTMENT OF TRANSPORTATION

OVERHEAD SIGN STRUCTURES - ALUMINUM TRUSS DETAILS
FOR TRUSS TYPES I-A, II-A AND III-A

SCALE: | SHEET 3 OF 10 SHEETS | STA. TO STA.

F.A.P. RTE.	SECTION	COUNTY	TOTAL SHEETS	SHEET NO.
342	(531) BR 23	COOK	1357	455

CONTRACT NO. 62W38

ILLINOIS FED. AID PROJECT

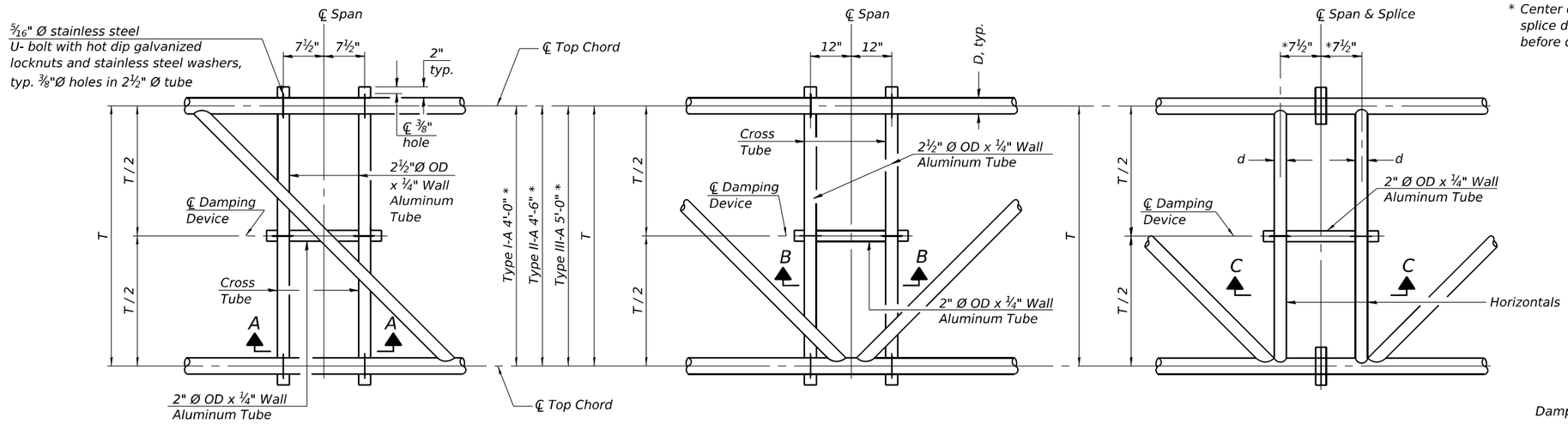

* Center of horizontal to center of splice dimension may vary. Verify before drilling holes in mounting tube.

PLAN DETAIL "A"
℄ Span between Panel Points

PLAN DETAIL "B"
℄ Span at Panel Point

PLAN DETAIL "C"
℄ Span at ℄ Chord Splice

NOTES

Damper: One damper per truss. (31 lbs. minimum Stockbridge-Type Aluminum - 29" minimum between ends of weights) Cost included in Overhead Sign Structure...

Materials: Aluminum tubes shall be ASTM B221 alloy 6061 temper T6. Cost included in Overhead Sign Structure...

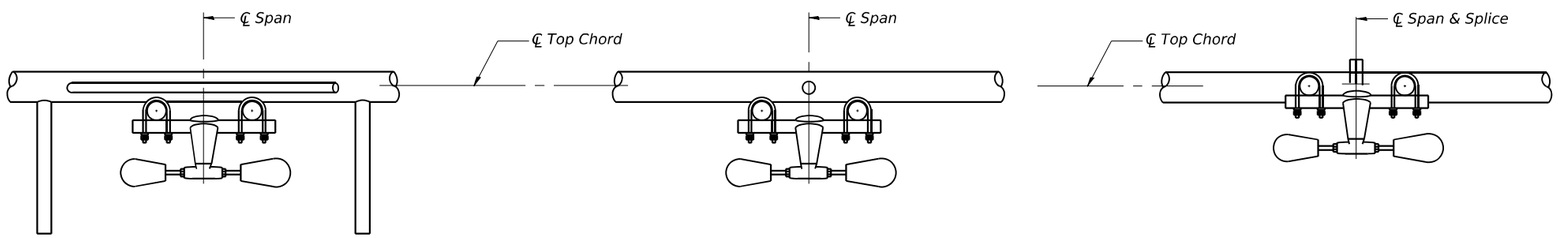

SECTION A-A

SECTION B-B

SECTION C-C

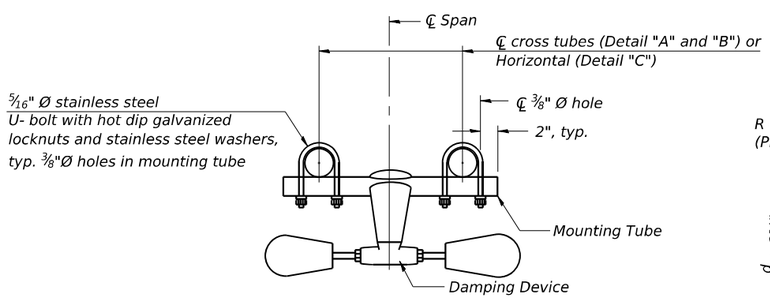

TRUSS DAMPING DEVICE CONNECTION DETAIL
(Typical)

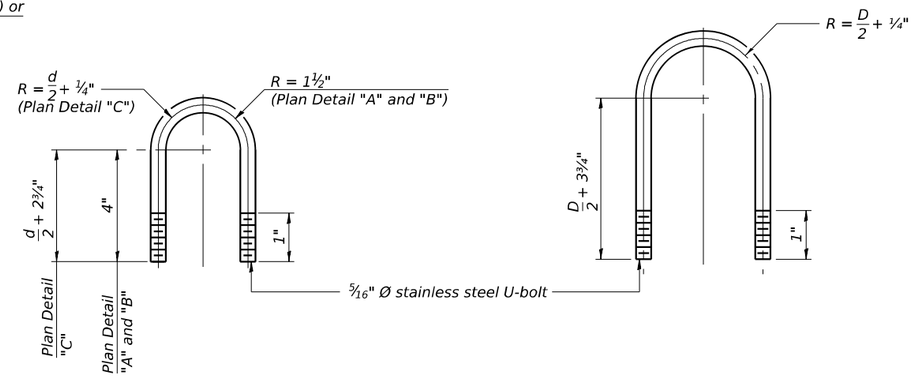

DAMPING DEVICE MOUNTING TUBE U-BOLT DETAIL
(Typical)

TOP CHORD TO CROSS TUBE U-BOLT DETAIL
(Typical - Detail "A" and "B")

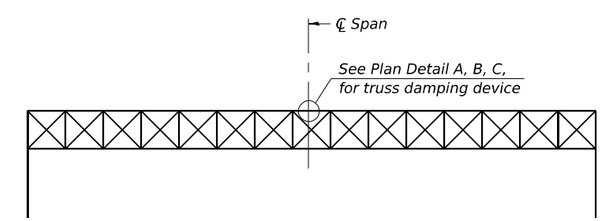

ELEVATION
Aluminum Overhead Sign Truss

OS-A-D 5-15-2023

MODEL: Default
FILE NAME: S:\JOB\6300-6399\6348\13\Drawings\CAD\Micro-SS4\CAD_Sheets\C3-D162\91-sht-sign structure details-SA.dgn

STRAND ASSOCIATES
1170 SOUTH HOUBOLT ROAD
JOLIET, ILLINOIS 60431
(815) 744-4200

USER NAME = tylerhe	DESIGNED - TCH	REVISED -	
	DRAWN - DJW	REVISED -	
PLOT SCALE = 0.1667 ' / in.	CHECKED - MAG	REVISED -	
PLOT DATE = 9/26/2024	DATE - 7/25/2024	REVISED -	

STATE OF ILLINOIS
DEPARTMENT OF TRANSPORTATION

OVERHEAD SIGN STRUCTURE
DAMPING DEVICE

SCALE: | SHEET 4 OF 10 SHEETS | STA. | TO STA.

F.A.P. RTE.	SECTION	COUNTY	TOTAL SHEETS	SHEET NO.
342	(531) BR 23	COOK	1357	456
		CONTRACT NO. 62W38		
		ILLINOIS	FED. AID PROJECT	

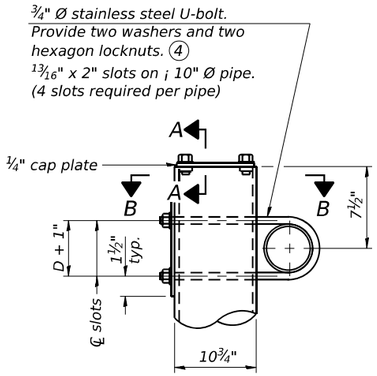

DETAIL A

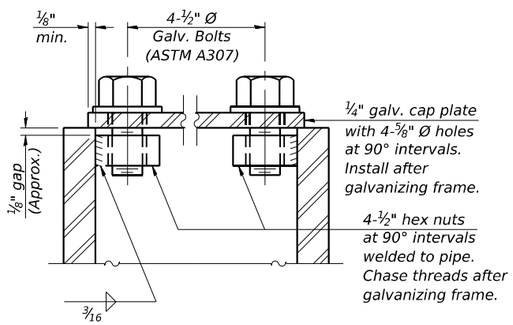

SECTION A-A

As an alternate to bolts, may use galvanized drive-fit caps installed after galvanizing frame.

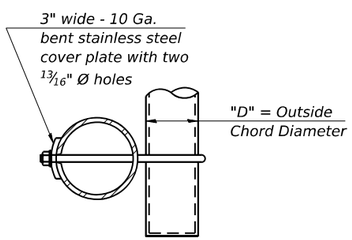

SECTION B-B

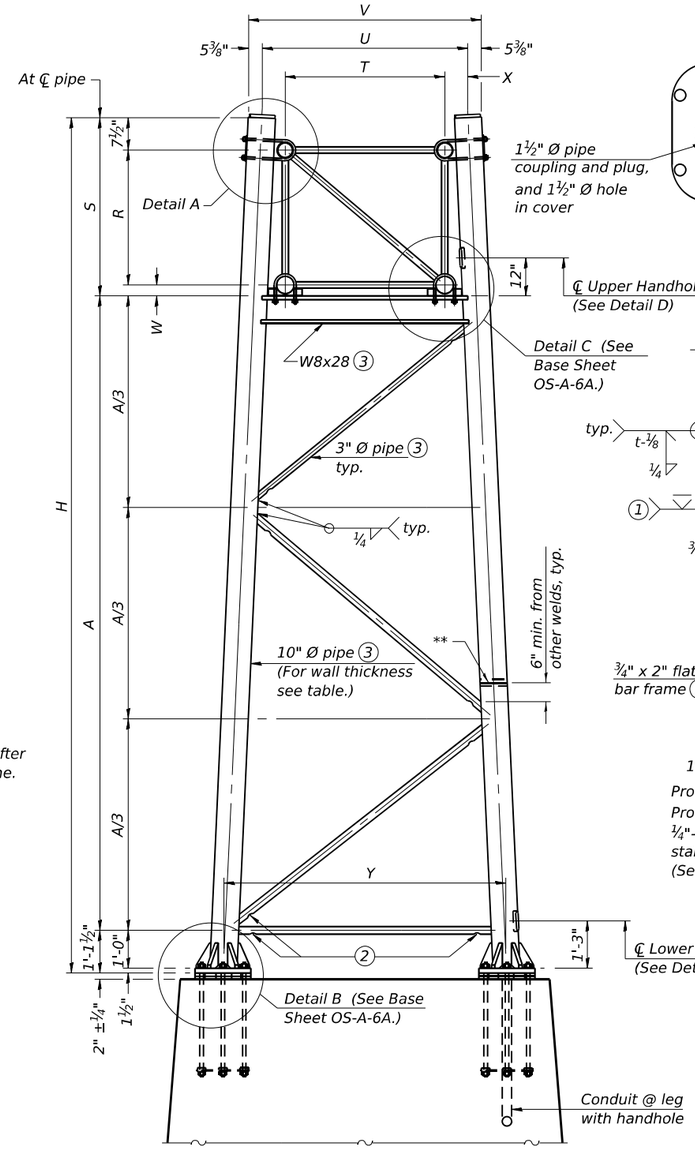

For Foundation Details, see base sheet OS-F3 (Spread Footing) or OS4-F3 (Drilled Shaft).

SIDE ELEVATION

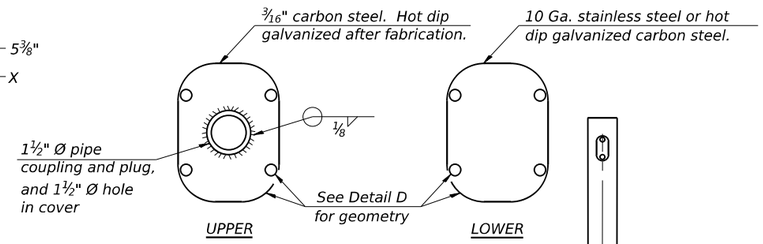

HANDHOLE COVERS

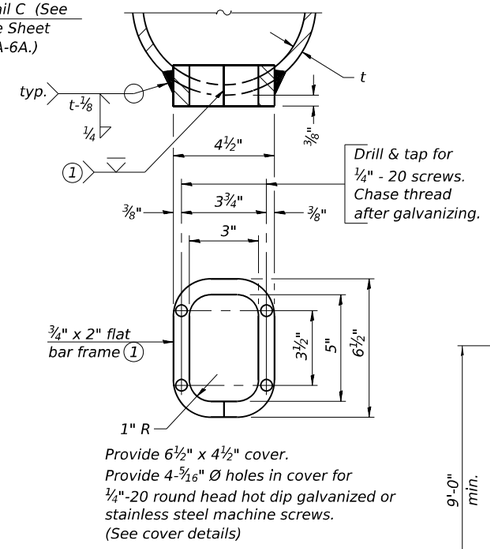

Provide 6½" x 4½" cover.
Provide 4-5/16" Ø holes in cover for ¼"-20 round head hot dip galvanized or stainless steel machine screws.
(See cover details)

DETAIL D

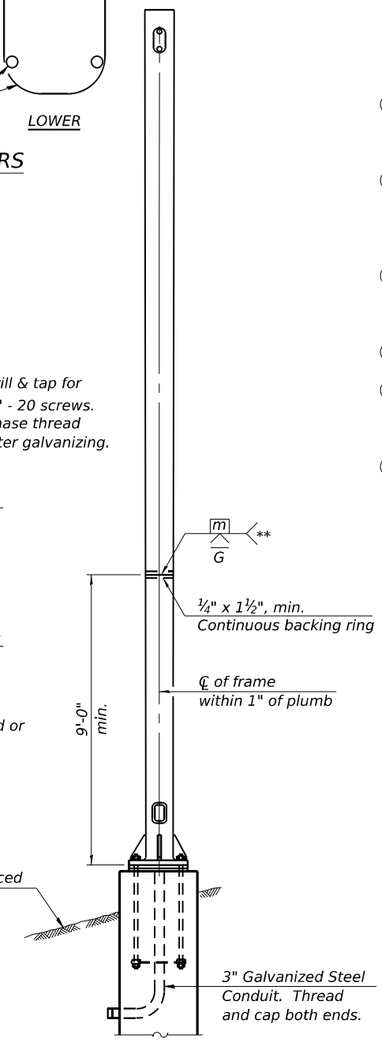

END ELEVATION

Support Design Loads: See Base Sheet OS-A-1 for design and loading criteria.
Load combinations checked include deadload plus:
a) 100% wind normal to sign, 20% parallel to sign
b) 60% wind normal to sign, 30% parallel to sign

1. In lieu of fabricated handhole frame as shown, may cut from 2" plate (rolling direction vertical). All cut faces to be ground to ANSI Roughness of 500µ in or less.
2. Galvanizing vent holes of adequate size shall be provided on underside at each end of bracing pipes. Alternately, holes may be provided in wall of pipe column. All vent holes shall be drilled and de-burred, typ.
3. Steel pipe, plate, carbon steel handhole covers and rolled sections shall be hot dip galvanized after fabrication. Painting is not permitted. See Base Sheet OS-A-1.
4. See General Notes for fasteners.
5. Dimensions shown are based on selection criteria in the Sign Structures Manual. Nonstandard applications must have dimensions verified or amended as appropriate.
6. "H" based on 15'-0" or actual sign height, whichever is greater.

Truss Type	Dimensions							
	R	S	T	U	V	W	X	Y
I-A	4'-6"	5'-5½"	4'-0"	5'-6"	6'-4¾"	4"	9"	8'-3"
II-A 5	5'-3"	6'-3¼"	4'-6"	6'-1"	6'-11¾"	4¾"	9½"	8'-3"

10" Ø PIPE TRUSS SUPPORT FRAME

** One butt welded joint is allowed only on one post per support frame. If used, weld procedure must be pre-approved by Engineer and joint shall receive 100% RT or UT (tension criteria) at Contractor's expense.

Structure Number	Station	Support Left	Support Right	Truss Type	Pipe Wall Thickness	H 6	A
1S016S053R000.0-006	1188+25.00	X		II-A	0.365	26'-1 9/16"	18'-8 13/16"
1S016S053R000.0-006	1188+25.00		X	II-A	0.365	28'-2 3/8"	20'-9 5/8"
1S016S053L000.0-002	1191+50.00	X		I-A	0.279	26'-4 13/16"	19'-9 13/16"
1S016S053L000.0-002	1191+50.00		X	I-A	0.279	30'-7 3/16"	24'-0 3/16"
1S016S053R000.0-005	1242+85.00	X	X	I-A	0.279	25'-6 1/2"	18'-11 1/2"

OS-A-6 5-15-2023

STRAND ASSOCIATES®
1170 SOUTH HOUBOLT ROAD
JOLIET, ILLINOIS 60431
(815) 744-4200

USER NAME = tylerhe	DESIGNED - TCH	REVISED -
	DRAWN - DJW	REVISED -
PLOT SCALE = 0.1667 ' / in.	CHECKED - MAG	REVISED -
PLOT DATE = 9/26/2024	DATE - 7/25/2024	REVISED -

STATE OF ILLINOIS
DEPARTMENT OF TRANSPORTATION

OVERHEAD SIGN STRUCTURES
SUPPORT FRAME FOR ALUMINUM TRUSS

SCALE: SHEET 5 OF 10 SHEETS STA. TO STA.

F.A.P. RTE.	SECTION	COUNTY	TOTAL SHEETS	SHEET NO.
342	(531) BR 23	COOK	1357	457
		CONTRACT NO. 62W38		
		ILLINOIS FED. AID PROJECT		

MODEL: Default
FILE NAME: S:\DL\630\~639\63461\3\Drawings\CADMicro\SSA\CAD_Sheets\C3-D162N91-sht-sign structure details-SA1.dgn

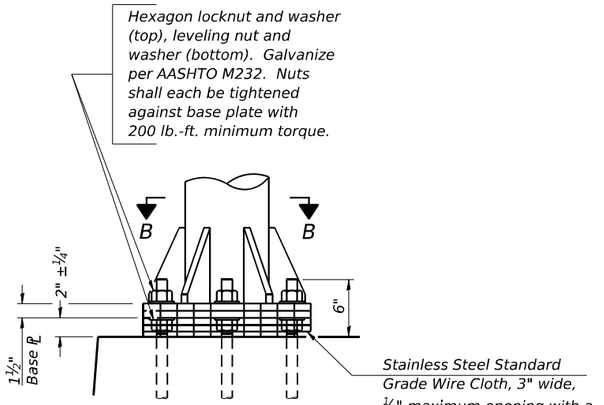

DETAIL B

Ribs shall be cut to fit slope of pipe.

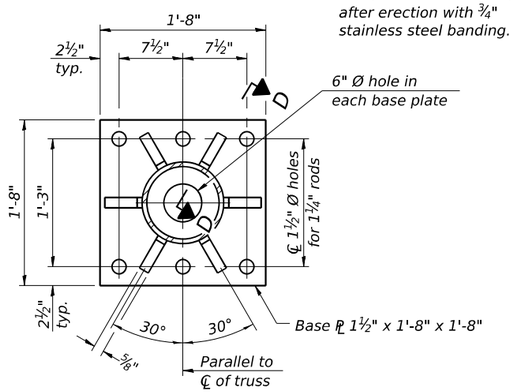

SECTION B-B

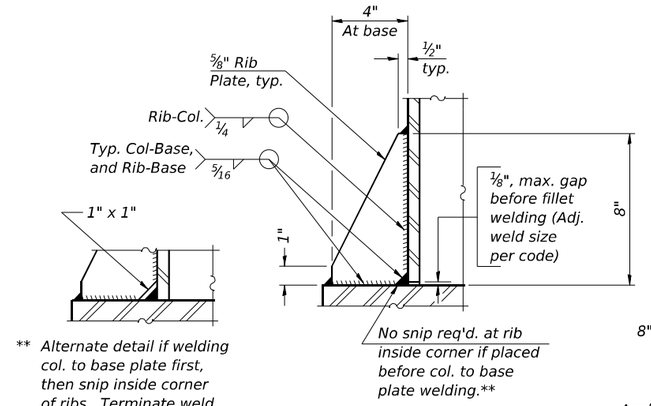

SECTION D-D

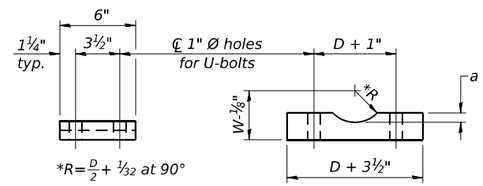

$*R = \frac{D}{2} + \frac{1}{32}$ at 90°

D = Outside Diameter of Chord.
For W, see Base Sheet OS-A-6.

SADDLE SHIM DETAIL

ASTM B26 Alloy 356-F
or
ASTM B209 Alloy 6061-T651
(4 required per sign truss)

Truss Chord Nominal Dia.	a
5"	¾"
5½"	13/16"
6"	⅞"
6½"	15/16"
7"	1"

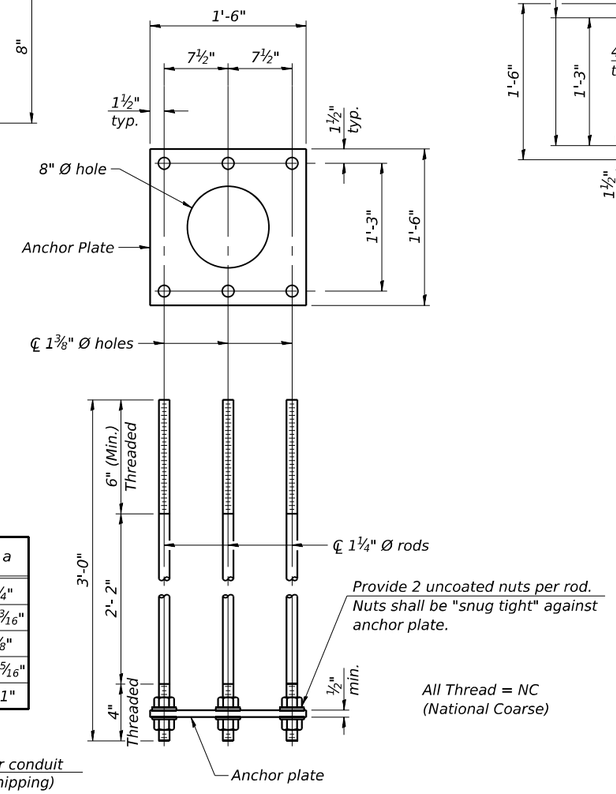

ANCHOR ROD DETAIL

Spread Footing Foundation

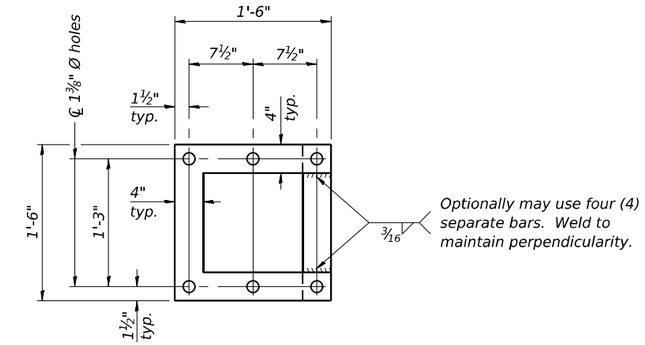

POSITIONING PLATE(S)

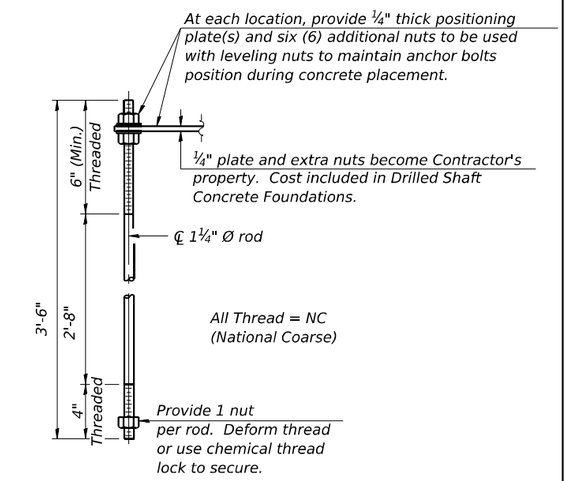

ANCHOR ROD DETAIL

Drilled Shaft Foundation

Anchor rods shall conform to ASTM F1554 Grade 105. Galvanize upper 12" minimum per AASHTO M232. No welding shall be permitted on rods.

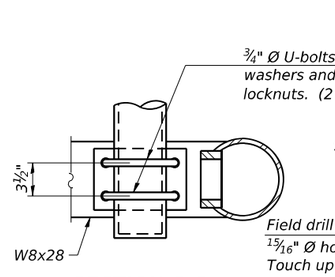

SECTION C-C

(Handhole cover not shown)

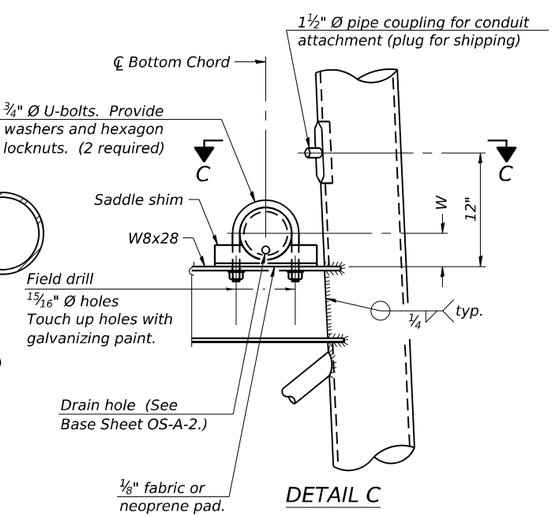

DETAIL C

10" Ø PIPE SUPPORT FRAME DETAILS

OS-A-6A 5-15-2023

MODEL: Default
FILE NAME: S:\JOL\6320-6399\6346\13\Drawings\CADMicro-SS4\CAD_Sheets\C3-D162N91-sht-sign structure details-SA.dgn

STRAND ASSOCIATES
1170 SOUTH HOUBOLT ROAD
JOLIET, ILLINOIS 60431
(815) 744-4200

USER NAME = tylerhe	DESIGNED - TCH	REVISED -
	DRAWN - DJW	REVISED -
PLOT SCALE = 0.1667 ' / in.	CHECKED - MAG	REVISED -
PLOT DATE = 9/26/2024	DATE - 7/25/2024	REVISED -

STATE OF ILLINOIS
DEPARTMENT OF TRANSPORTATION

OVERHEAD SIGN STRUCTURES
SUPPORT FRAME DETAILS - ALUMINUM TRUSS

SCALE: SHEET 6 OF 10 SHEETS STA. TO STA.

F.A.P. RTE.	SECTION	COUNTY	TOTAL SHEETS	SHEET NO.
342	(531) BR 23	COOK	1357	458
		CONTRACT NO. 62W38		
		ILLINOIS FED. AID PROJECT		

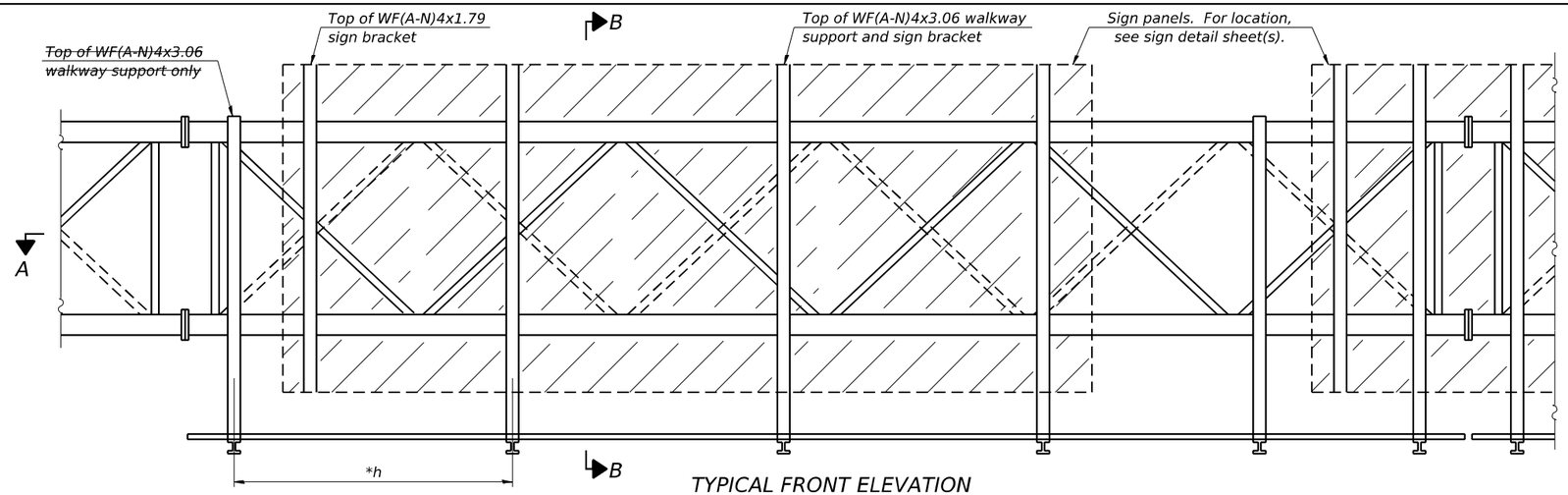

TYPICAL FRONT ELEVATION

With lights and handrail omitted for clarity.
For Section B-B, see Base Sheet OS-A-10.

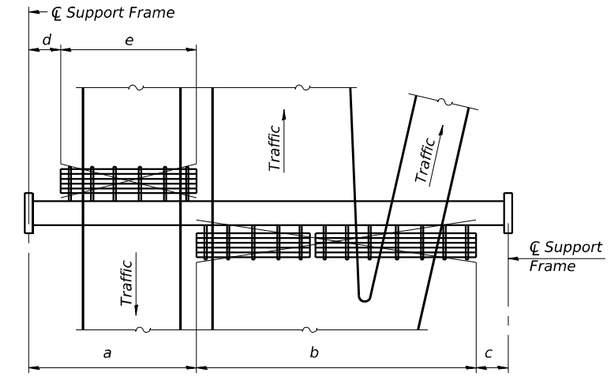

PLAN
WALKWAY AND HANDRAIL SKETCH

(Road plan beneath truss varies)

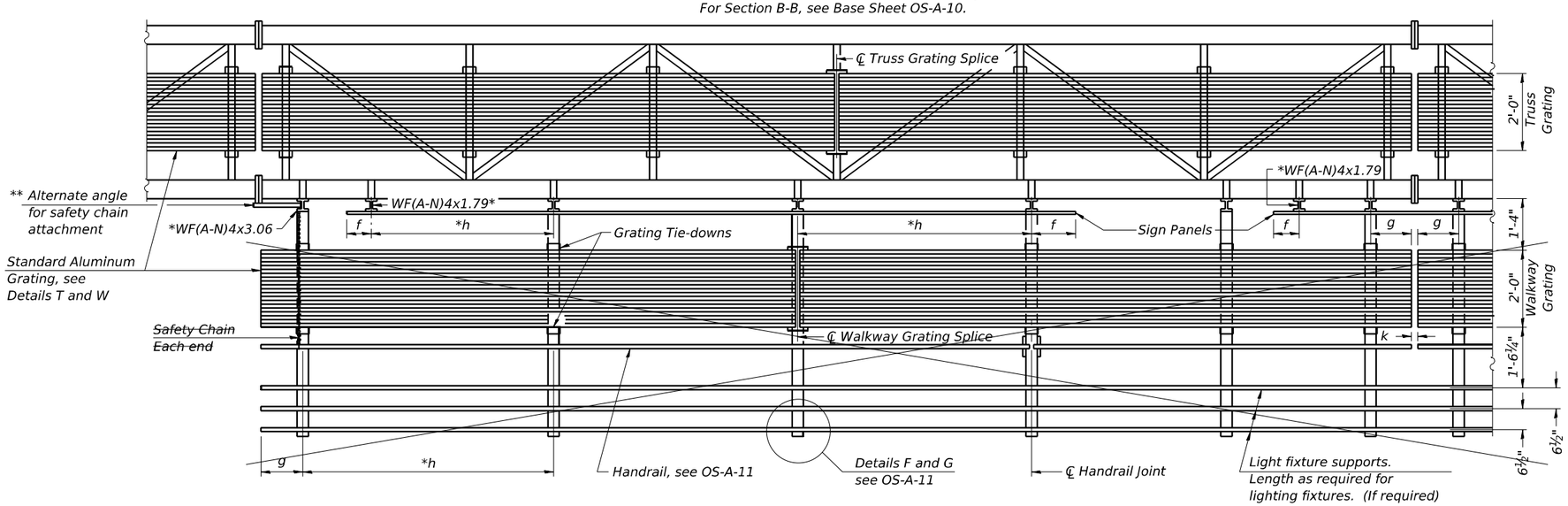

SECTION A-A

Handrail and walkway shall span a minimum of three brackets between splices and/or gap joints.
Place all sign and walkway brackets as close to panel points as practical.
Handrail joints, grating, and light support splices placed as needed.

BRACKET TABLE

WF(A-N)4x1.79 or WF(A-N)4x3.06 ASTM B308, Alloy 6061-T6		
Sign Width		Number Brackets Required
Greater Than	Less Than or Equal To	
	8'-0"	2
8'-0"	14'-0"	3
14'-0"	20'-0"	4
20'-0"	26'-0"	5
26'-0"	32'-0"	6

Notes:

* Space walkway brackets WF(A-N)4x3.06 and sign brackets WF(A-N)4x1.79 for efficiency and within limits shown:

f = 12" maximum, 4" minimum (End of sign to ℄ of nearest bracket)
g = 12" maximum, 4" minimum (End of walkway grating to ℄ of nearest support bracket)
h = 6'-0" maximum (℄ to ℄ sign and/or walkway support brackets, WF(A-N)4x1.79 or WF(A-N)4x3.06)
k = 2" maximum gap between adjacent walkway grating sections and handrail ends

** If walkway bracket at safety chain location is behind sign, add angle to bracket, see Alternate Safety Chain Attachment on Base Sheet OS-A-11.

For Details T and W, Section B-B and Grating Splice Details see Base Sheet OS-A-10.
For Handrail Details see Base Sheet OS-A-11.

Structure Number	Station	a	b	c	d	e	Walkway Grating and Handrail Lengths
1S016S053R000.0-006	1188+25.00	N/A	N/A	N/A	N/A	N/A	N/A
1S016S053L000.0-002	1191+50.00	N/A	N/A	N/A	N/A	N/A	N/A
1S016S053R000.0-005	1242+85.00	N/A	N/A	N/A	N/A	N/A	N/A

Truss grating to facilitate inspection shall run full length (center to center of support frames) ±12" on overhead trusses.
Cost of truss grating is included in "Overhead Sign Structure".

Walkway and Truss Grating width dimensions are nominal and may vary ±½" based on available standard widths.

OS-A-9 5-15-2023

STRAND ASSOCIATES
1170 SOUTH HOUBOLT ROAD
JOLIET, ILLINOIS 60431
(815) 744-4200

USER NAME = tylerhe	DESIGNED - TCH	REVISED -
	DRAWN - DJW	REVISED -
PLOT SCALE = 0.1667 ' / in.	CHECKED - MAG	REVISED -
PLOT DATE = 9/26/2024	DATE - 7/25/2024	REVISED -

STATE OF ILLINOIS
DEPARTMENT OF TRANSPORTATION

OVERHEAD SIGN STRUCTURES
ALUMINUM WALKWAY DETAILS

SCALE: SHEET 7 OF 10 SHEETS STA. TO STA.

F.A.P. RTE.	SECTION	COUNTY	TOTAL SHEETS	SHEET NO.
342	(531) BR 23	COOK	1357	459

CONTRACT NO. 62W38
ILLINOIS FED. AID PROJECT

MODEL: Default
FILE NAME: S:\JOB\6300-6399\6348\13\Drawings\CADMicro-SSA\CAD Sheets\C3-D162N91-sht-sign structure details-SA1.dgn

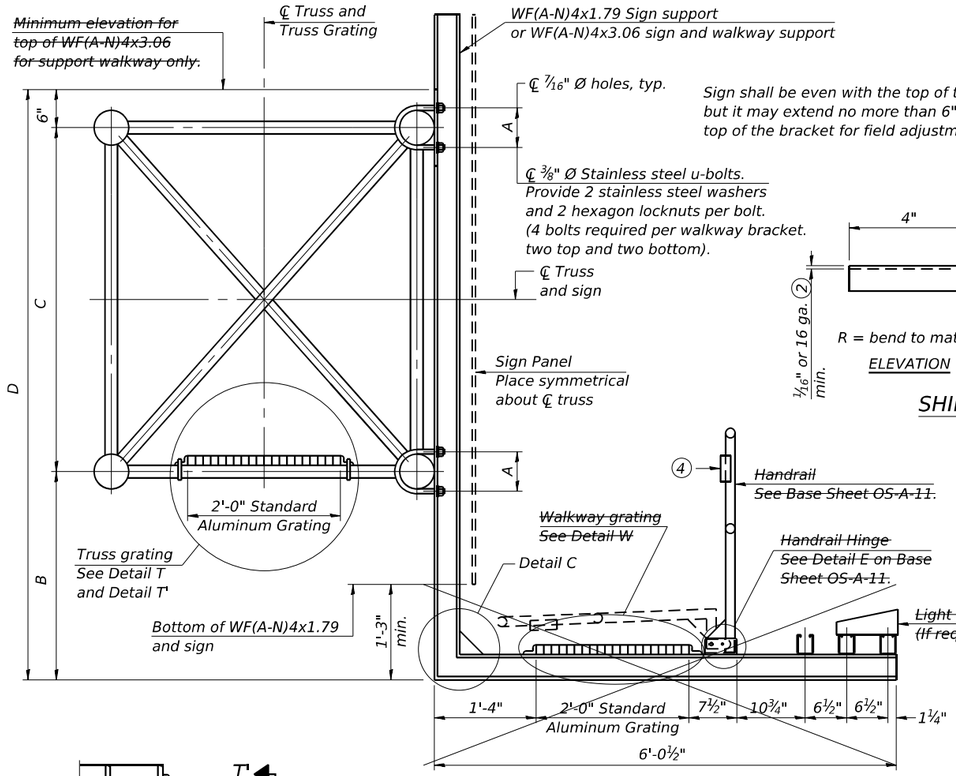

SECTION B-B

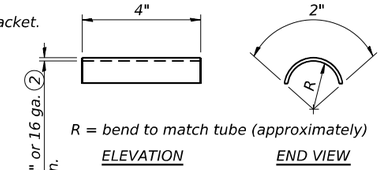

SHIM DETAIL

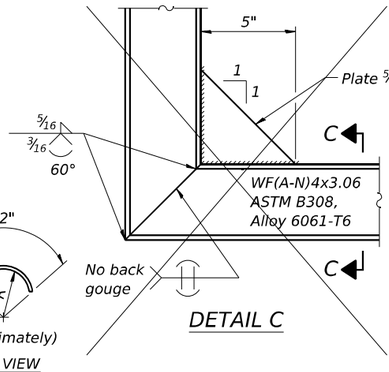

DETAIL C

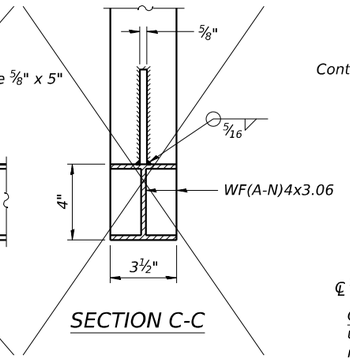

SECTION C-C

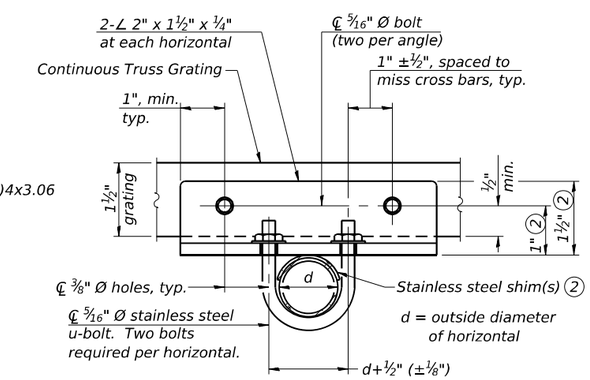

SECTION T-T

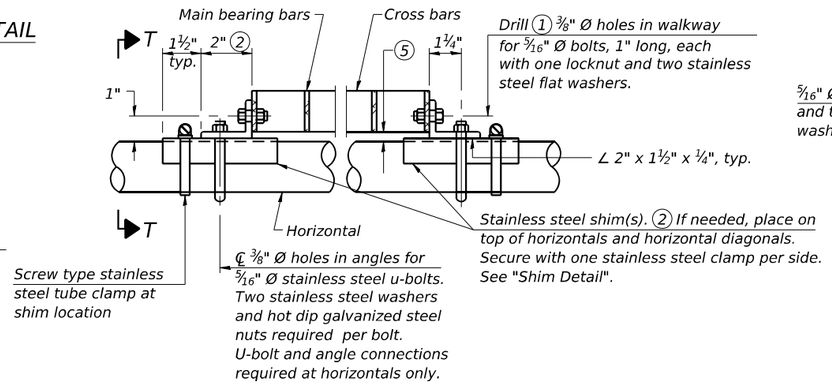

DETAIL T
(Continuous Truss grating)

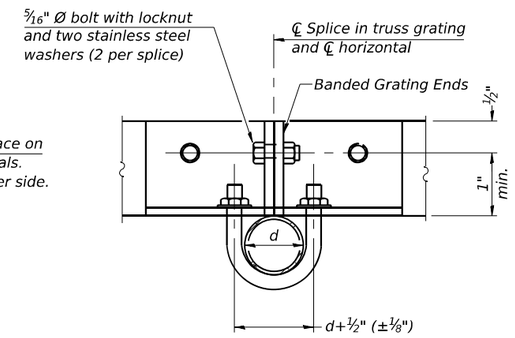

SECTION T'-T'

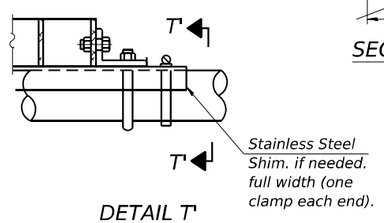

DETAIL T'
(Truss grating splice)

Details not shown same as Detail T.
Alternate materials may be used subject to the Engineer's review and approval.

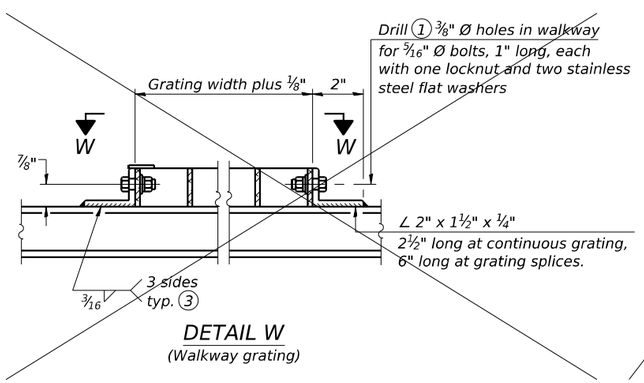

DETAIL W
(Walkway grating)

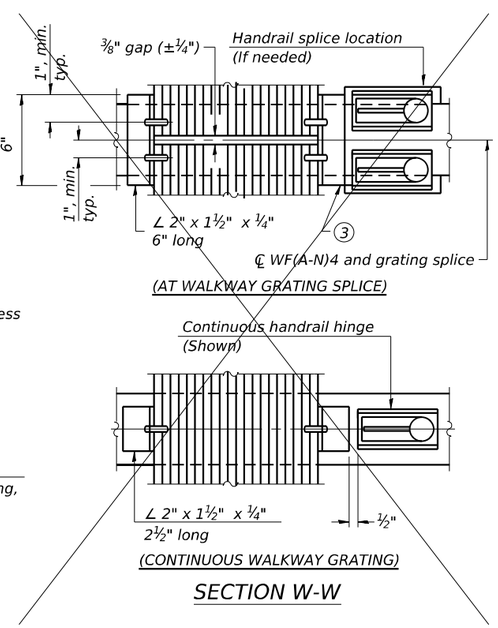

SECTION W-W

SPECIFICATIONS FOR STANDARD ALUMINUM GRATING

Main Bearing Bars shall be 3/16" x 1½" on 1 3/16" centers and conform to ASTM B221 Alloy 6061-T6.

Cross bars shall be 3/16" x 1½" on 4" centers and conform to ASTM B221 Alloy 6063-T5 or 6061-T6.

OR

Aluminum Grating with modified "t" sections for main bearing bars shall meet the following requirements:

Main bars shall conform to ASTM B221 Alloy 6061-T6 and have a minimum section modulus equal to 0.0705 in.³ per bar, a depth of 1½", spaced on 1 3/16" centers.

Cross bars shall conform to ASTM B221 Alloy 6063-T5 or T-42 and spaced on 4" centers.

Structure Number	Station	A	⑥B	C	⑥D
1S016S053R000.0-006	1188+25.00	9 5/8"	4'- 4 1/2"	5'-3"	10'-1 1/2"
1S016S053L000.0-002	1191+50.00	9 1/8"	3'-0"	4'-6"	8'-0"
1S016S053R000.0-005	1242+85.00	9 5/8"	5'-3"	4'-6"	10'-3"

① Drilling holes in grating may be done in shop or field, based on Contractor's preference and subject to accurate alignment.

② Stainless steel shims shall be placed as shown in Detail T if needed to compensate for alignment variations between horizontal and diagonal pipes beyond adjustment provided by angles. Thicker shims may be used subject to shims performing properly.

③ If Handrail Joint present, weld angle to WF(A-N)4 and ¼" extension bars. (See Base Sheet OS-A-11.)

④ PL ⅛" x ½" x 2" welded to handrail posts to protect locations that contact grating.

⑤ Tube to grating gap may vary from 0 to ½", max. to align walkway, allow for camber, etc.

⑥ Based on actual height of tallest sign given on OS-A-1.

OS-A-10 5-15-2023

STRAND ASSOCIATES
1170 SOUTH HOUBOLT ROAD
JOLIET, ILLINOIS 60431
(815) 744-4200

USER NAME = tylerhe	DESIGNED - TCH	REVISED -
	DRAWN - DJW	REVISED -
PLOT SCALE = 0.1667 ' / in.	CHECKED - MAG	REVISED -
PLOT DATE = 9/26/2024	DATE - 7/25/2024	REVISED -

STATE OF ILLINOIS
DEPARTMENT OF TRANSPORTATION

OVERHEAD SIGN STRUCTURES
ALUMINUM WALKWAY DETAILS

SCALE: SHEET 8 OF 10 SHEETS STA. TO STA.

F.A.P. RTE.	SECTION	COUNTY	TOTAL SHEETS	SHEET NO.
342	(531) BR 23	COOK	1357	460
		CONTRACT NO. 62W38		
	ILLINOIS	FED. AID PROJECT		

MODEL: Default
FILE NAME: S:\DI\6300-639\6346113D\drawings\CAD\Micro-SS4\CAD_Sheets\C3-D162N91-sht-sign structure details-SA.dgn

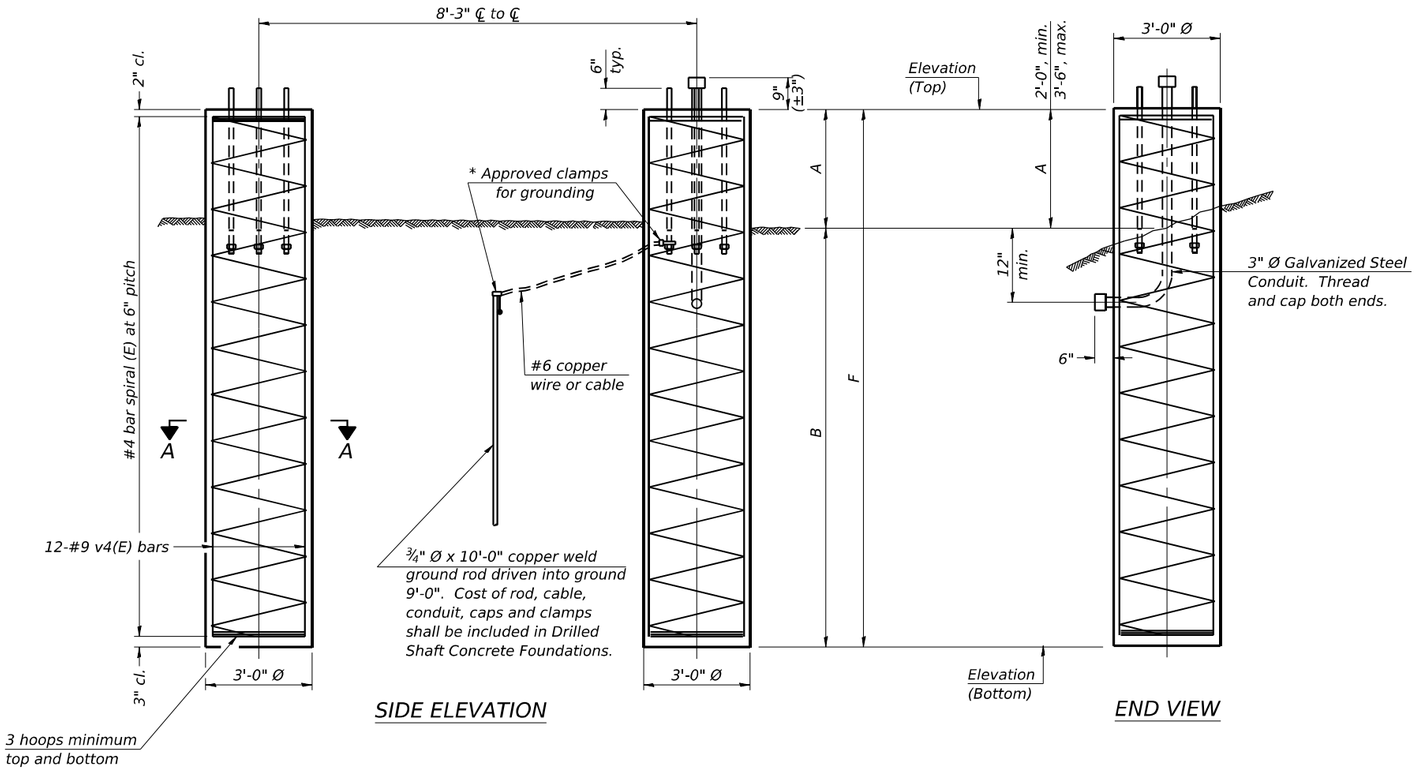

SIDE ELEVATION

END VIEW

BAR LIST - EACH FOUNDATION

Bar	Number	Size	Length	Shape
v4(E)	16	#9	F less 5"	———
#4 bar spiral (E) - see Side Elevation				

NOTES:

The foundation dimensions shown are based on the presence of mostly cohesive soils with an average Unconfined Compressive Strength (Qu) of at least 1.25 tsf, which must be determined by previous soil investigations at the jobsite. When other conditions are indicated, the boring data will be included in the plans and the foundation dimensions shown will be the result of site specific designs.

If the conditions encountered are different than those indicated, the Contractor shall notify the Engineer to determine if the foundation dimensions need to be modified. If dimensions "B" or "F" are revised by more than 12" by the Contractor, "as-built" plans shall be prepared and submitted to the District Bureau of Operations for future reference.

No sonotubes or decomposable forms shall be used below the lower conduit entrance.

Permanent metal forms or other shielding may not be left in place below that elevation without the Engineer's written permission.

Concrete shall be placed monolithically, without construction joints.

Backfill shall be placed per Article 502 of Standard Specification and prior to erection of support column.

A normal surface finish followed by a Concrete Sealer application will be required on concrete surfaces above the lowest elevation 6" below finished ground line. Cost included in Drilled Shaft Concrete Foundation.

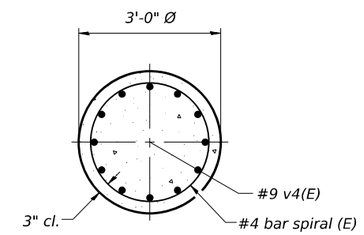

SECTION A-A

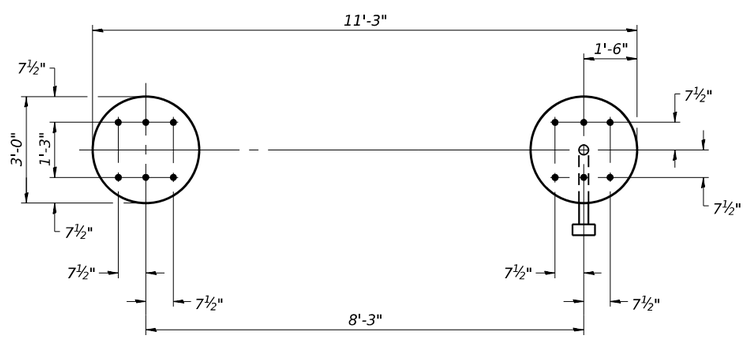

PLAN

For anchor rod size and placement, see Support Frame Detail Sheet.

* Anchor rod shall be ground or filed to bright metal at clamp and cable connection location.

DETAILS FOR 10" Ø SUPPORT FRAME TYPE I-A or II-A TRUSS

Structure Number	Station	Left Foundation					Right Foundation					Class DS Concrete (Cu. Yds.)
		Elevation Top	Elevation Bottom	A	B	F	Elevation Top	Elevation Bottom	A	B	F	
1S016S053R000.0-006	1188+25.00	N/A	N/A	N/A	N/A	N/A	732.85	713.35	2'-0"	17'-6"	19'-6"	10.21
1S016S053L000.0-002	1191+50.00	N/A	N/A	N/A	N/A	N/A	731.42	712.92	2'-0"	16'-6"	18'-6"	9.69
1S016S053R000.0-005	1242+85.00	N/A	N/A	N/A	N/A	N/A	736.03	716.5	3'-0 3/8"	16'-6"	19'-6 3/8"	10.23

OS4-F3 5-15-2023

MODEL: Default
FILE NAME: S:\IDOT\63396\113\Drawings\CADD\Micro-SS8\CAD Sheets\C3-D162N91-int-sign structure details-SAL.dgn

STRAND ASSOCIATES
1170 SOUTH HOUBOLT ROAD
JOLIET, ILLINOIS 60431
(815) 744-4200

USER NAME = tylerhe	DESIGNED - TCH	REVISED -
	DRAWN - DJW	REVISED -
PLOT SCALE = 0.1667 ' / in.	CHECKED - MAG	REVISED -
PLOT DATE = 9/26/2024	DATE - 7/25/2024	REVISED -

STATE OF ILLINOIS
DEPARTMENT OF TRANSPORTATION

OVERHEAD SIGN STRUCTURES
DRILLED SHAFT DETAILS

SCALE: SHEET 9 OF 10 SHEETS STA. TO STA.

F.A.P. RTE.	SECTION	COUNTY	TOTAL SHEETS	SHEET NO.
342	(531) BR 23	COOK	1357	461
		CONTRACT NO. 62W38		
		ILLINOIS	FED. AID PROJECT	

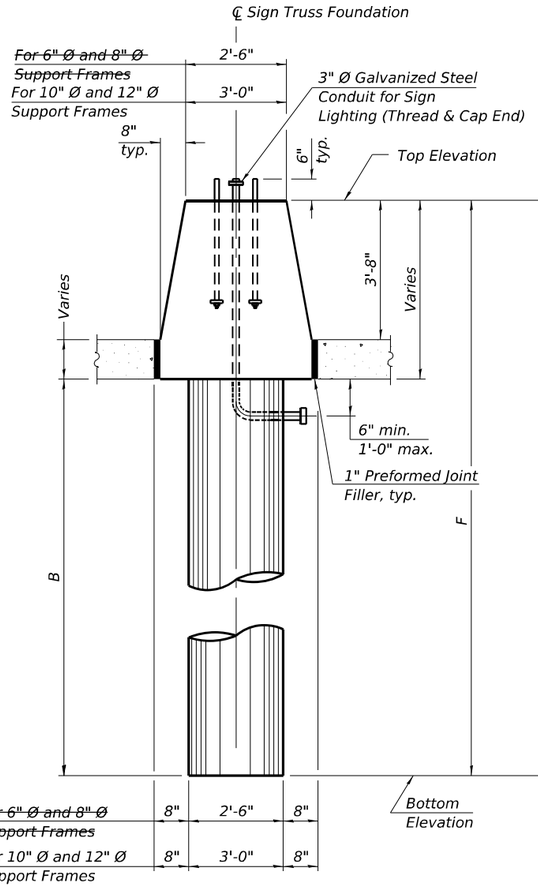

END VIEW

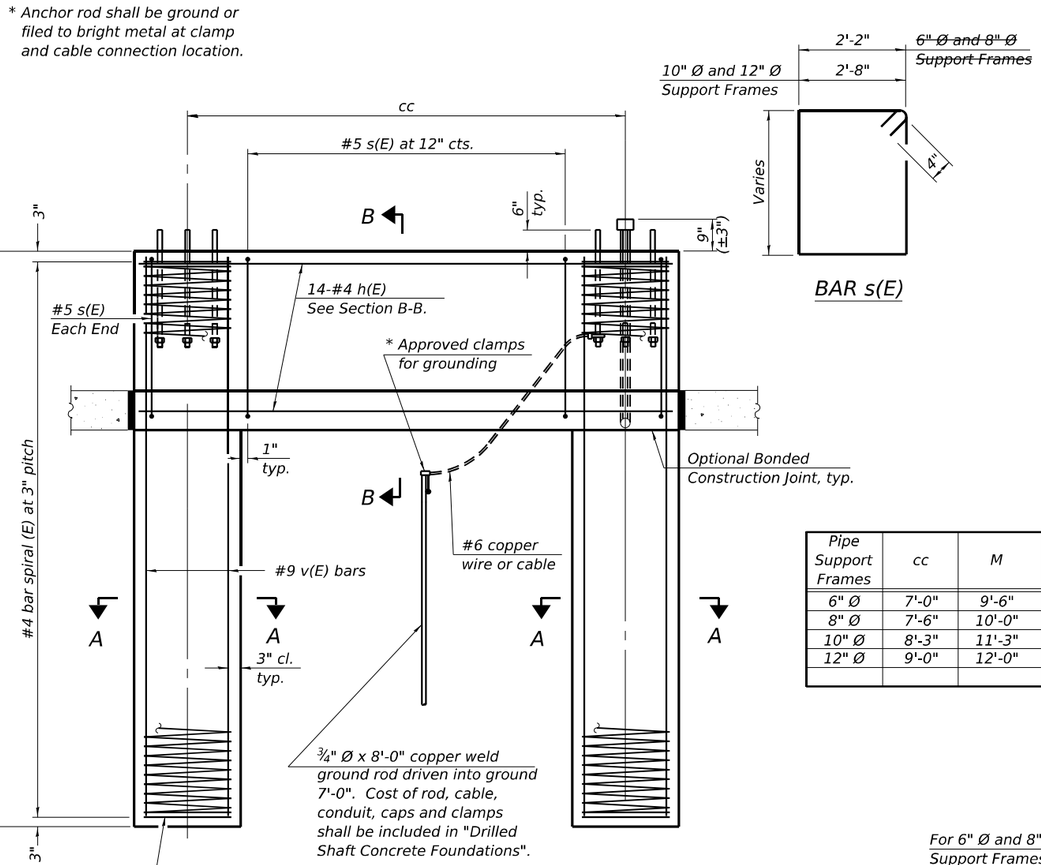

SIDE ELEVATION

Concrete Foundation poured monolithically with no construction joint.

BAR s(E)

NOTES:

The foundation dimensions shown are based on the presence of mostly cohesive soils with an average Unconfined Compressive Strength (Qu) of at least 1.25 tsf, which must be determined by previous soil investigations at the jobsite. When other conditions are indicated, the boring data will be included in the plans and the foundation dimensions shown will be the result of site specific designs.

If the conditions encountered are different than those indicated, the Contractor shall notify the Engineer to determine if the foundation dimensions need to be modified. If dimensions "B" or "F" are revised by more than 12" by the Contractor, "as-built" plans shall be prepared and submitted to the District Bureau of Operations for future reference.

No sonotubes or decomposable forms shall be used below the lower conduit entrance.

Permanent metal forms or other shielding may not be left in place below that elevation without the Engineer's written permission.

Concrete shall be placed monolithically, without construction joints.

Backfill shall be placed per Article 502 of Standard Specification and prior to erection of support column.

A normal surface finish followed by a Concrete Sealer application will be required on concrete surfaces above the lowest elevation 6" below finished ground line. Cost included in Drilled Shaft Concrete Foundation.

BAR LIST - EACH FOUNDATION

Bar	Number	Size	Length	Shape
h(E)	14	#4	M less 4"	——
s(E)	Varies	#5	Varies	□
v(E)	16	#9	F less 0'-5"	——
v(E)	24	#9	F less 0'-5"	——
#4(E) bar spiral. See Side Elevation				

~~6" Ø and 8" Ø Support Frame~~
10" Ø and 12" Ø Support Frame

Pipe Support Frames	cc	M	a	a/2
6" Ø	7'-0"	9'-6"	0'-11"	5½"
8" Ø	7'-6"	10'-0"	1'-1½"	6¾"
10" Ø	8'-3"	11'-3"	1'-3"	7½"
12" Ø	9'-0"	12'-0"	1'-6"	9"

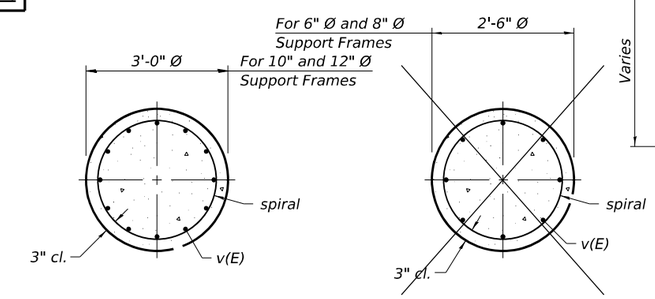

SECTION A-A

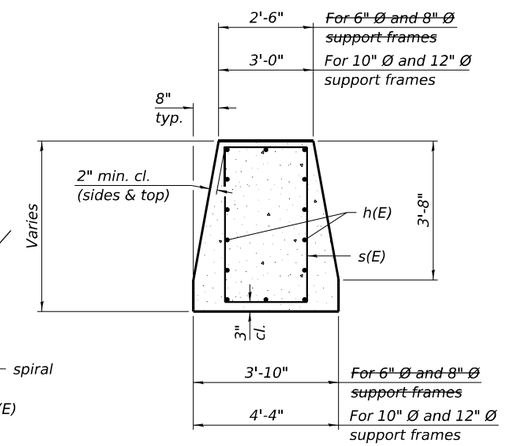

SECTION B-B

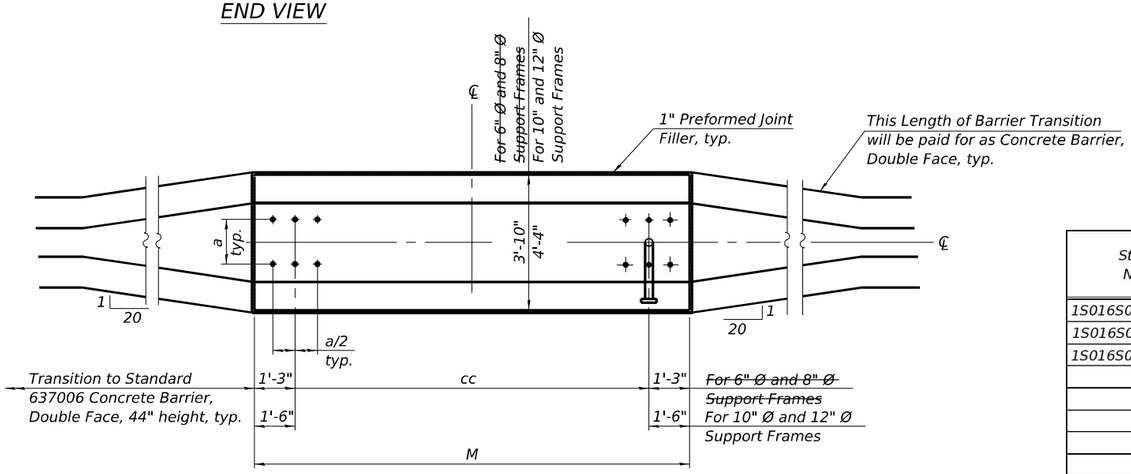

PLAN

Structure Number	Station	Left Foundation				Right Foundation				Class DS Concrete (Cu. Yds.)
		Elevation Top	Elevation Bottom	B	F	Elevation Top	Elevation Bottom	B	F	
1S016S053R000.0-006	1188+25.00	734.92	712.83	17'-6"	22'-1"	N/A	N/A	N/A	N/A	22.61
1S016S053L000.0-002	1191+50.00	735.62	714.53	16'-6"	21'-1"	N/A	N/A	N/A	N/A	22.09
1S016S053R000.0-005	1242+85.00	736.03	714.94	16'-6"	21'-1"	N/A	N/A	N/A	N/A	22.09

OS4-MED 5-15-2023

MODEL: Default
FILE NAME: S:\IO\6300-6399\6346\13\Drawings\CAD\Micro-SSA\CAD_Sheets\C3-D1629491-sht-sign structure details-SA.dgn

STRAND ASSOCIATES®
1170 SOUTH HOUBOLT ROAD
JOLIET, ILLINOIS 60431
(815) 744-4200

USER NAME = tylerhe	DESIGNED - TCH	REVISED -	
	DRAWN - DJW	REVISED -	
PLOT SCALE = 0.1667 ' / in.	CHECKED - MAG	REVISED -	
PLOT DATE = 9/26/2024	DATE - 7/25/2024	REVISED -	

STATE OF ILLINOIS
DEPARTMENT OF TRANSPORTATION

OVERHEAD SIGN STRUCTURES
MEDIAN SUPPORT FOUNDATION DETAILS

SCALE: SHEET 10 OF 10 SHEETS STA. TO STA.

F.A.P. RTE.	SECTION	COUNTY	TOTAL SHEETS	SHEET NO.
342	(531) BR 23	COOK	1357	462
		CONTRACT NO. 62W38		
		ILLINOIS	FED. AID PROJECT	

SOIL BORING LOG

gonzalez COMPANIES, LLC

Page 1 of 1

Date 23/5/5

ROUTE FAP 342 DESCRIPTION Sign Boring - Biesterfield B LOGGED BY Gonzalez (BR)

SECTION 2018-100-BR LOCATION NE 1/4, SEC. 35, TWP. 42N, RNG. 10E, 3rd PM,
Latitude 42.07760936, Longitude 88.02886058

COUNTY Cook DRILLING METHOD Hollow Stem Auger (8" O.D., 3.25" I.D.) HAMMER TYPE Auto 140 lb HE 105

STRUCT. NO. 1S016S053R000.0-006
Station 1188+25.00

BORING NO. GC-14
Station 3188+12
Offset 31.3 ft RT
Ground Surface Elev. 731.7 ft

Surface Water Elev. ft
Stream Bed Elev. ft

Groundwater Elev.:
First Encounter Dry ft
Upon Completion Dry ft
After Hrs. Filled ft

Description	Elev.	DEPTH (ft)	BLOWS (/6")	UCS Qu (tsf)	MOIST (%)
CONCRETE - 11.5"	730.7				
Course SAND - 2"	730.6		4		
Medium Stiff to Stiff, Brown, Dry to Moist, CLAY, Trace Gravel			2 4	2.6 B	24
			3		
		-5	4 5	3.2 B	16
			4		
			6 7	5.8 B	17
			6		
		-10	9 11	4.5 P	16
			2		
			4 4	2.3 B	15
			3		
		-15	4 6	2.2 B	16
			3		
			3 4		16
			2		
		-20	3 4	2.1 B	18
Medium Stiff to Stiff, Brown, Dry to Moist, CLAY, Trace Gravel *(continued)*			6		
			5 6		18
			3		
		-25	2 2	0.4 B	15
			2		
			3 5	1.6 B	16
			4		
	701.7	-30	3 6	1.4 B	22
Boring terminated at 30 feet.					
		-35			
		-40			

The Unconfined Compressive Strength (UCS) Failure Mode is indicated by (B-Bulge, S-Shear, P-Penetrometer, M-Modified SPT)
The SPT (N value) is the sum of the last two blow values in each sampling zone (AASHTO T206)

BBS, form 137 (Rev. 8-99)

SOIL BORING LOG

gonzalez COMPANIES, LLC

Page 1 of 1

Date 23/5/11

ROUTE FAP 342 DESCRIPTION Sign Boring - Biesterfield A LOGGED BY Gonzalez (BR)

SECTION 2018-100-BR LOCATION NE 1/4, SEC. 35, TWP. 42N, RNG. 10E, 3rd PM,
Latitude 42.07758259, Longitude 88.02909204

COUNTY Cook DRILLING METHOD Hollow Stem Auger (8" O.D., 3.25" I.D.) HAMMER TYPE Auto 140 lb HE 105

STRUCT. NO. 1S016S053R000.0-006
Station 1188+25.00

BORING NO. GC-27
Station 3188+21
Offset 31.8 ft LT
Ground Surface Elev. 731.0 ft

Surface Water Elev. ft
Stream Bed Elev. ft

Groundwater Elev.:
First Encounter Dry ft
Upon Completion Dry ft
After Hrs. Filled ft

Description	Elev.	DEPTH (ft)	BLOWS (/6")	UCS Qu (tsf)	MOIST (%)
ASPHALT - 16"	729.7		6		
Fine SAND	729.0		8 5	2.5 P	25
Stiff, Brown, Moist, CLAY, Trace Gravel, Trace Sand			3		
		-5	5 5	1.3 B	26
			3		
			5 6	1.5 B	18
			5		
		-10	6 7	3.8 B	16
			2		
			5 5	2.0 B	15
			3		
		-15	5 5	1.5 B	16
			2		
			2 4	1.2 B	18
			3		
		-20	4 4	1.5 B	16
Stiff, Brown, Moist, CLAY, Trace Gravel, Trace Sand *(continued)*			3		
			4 4	1.2 B	19
			3		
		-25	2 4	0.8 B	20
			3		
			3 5	1.2 B	21
			2		
	701.0	-30	4 4	2.3 B	21
Boring terminated at 30 feet.					
		-35			
		-40			

The Unconfined Compressive Strength (UCS) Failure Mode is indicated by (B-Bulge, S-Shear, P-Penetrometer, M-Modified SPT)
The SPT (N value) is the sum of the last two blow values in each sampling zone (AASHTO T206)

BBS, form 137 (Rev. 8-99)

MODEL: Default
FILE NAME: S:\OL\6300-6399\6346\113\Drawings\CADMicro-SS4\CAD_Sheets\C3-D162N91-sht-soil boring logs-S4.dgn

STRAND ASSOCIATES
1170 SOUTH HOUBOLT ROAD
JOLIET, ILLINOIS 60431
(815) 744-4200

USER NAME = tylerhe	DESIGNED - TCH	REVISED -	
	DRAWN - DJW	REVISED -	
PLOT SCALE = 0.1667 ' / in.	CHECKED - MAG	REVISED -	
PLOT DATE = 9/26/2024	DATE - 7/25/2024	REVISED -	

STATE OF ILLINOIS
DEPARTMENT OF TRANSPORTATION

SOIL BORING LOGS - 1

SCALE: SHEET 1 OF 3 SHEETS STA. TO STA.

F.A.P. RTE.	SECTION	COUNTY	TOTAL SHEETS	SHEET NO.
342	(531) BR 23	COOK	1357	463
		CONTRACT NO. 62W38		
	ILLINOIS	FED. AID PROJECT		

SOIL BORING LOG

gonzalez COMPANIES, LLC

Page 1 of 1

Date 24/5/22

ROUTE FAP 342 DESCRIPTION Overhead Sign Boring LOGGED BY Gonzalez (OG)

SECTION 2018-100-BR LOCATION , SEC. 35, TWP. 42N, RNG. 10E, 3rd PM,
Latitude 42.0783477, Longitude -88.0290937

COUNTY Cook DRILLING METHOD Hollow Stem Auger (8" O.D., 3.25" I.D.) HAMMER TYPE Auto 140 lb HE 91

STRUCT. NO. 1S016S053L000.0-002
Station 1191+50.00

BORING NO. GC-77
Station 2191+14
Offset 27.4 ft LT
Ground Surface Elev. 732.5 ft

Surface Water Elev. ft
Stream Bed Elev. ft

Groundwater Elev.:
First Encounter Dry ft
Upon Completion Dry ft
After Hrs. Filled ft

Description	Elev.	DEPTH (ft)	BLOWS (/6")	UCS Qu (tsf)	MOIST (%)
Concrete - 12"	731.5				
Loose to medium dense, brown, CLAYEY SAND, some gravel			3		
			2 1		4
	729.0				
Medium stiff to stiff, brown, CLAY, some gravel and sand			3		
		-5	5 6	4.1 B	17
			4		
			5 6	3.0 P	17
	724.0				
Medium Dense, Brown, SANDY CLAY LOAM, trace gravel			3		
		-10	3 5		17
	722.0				
Medium stiff to stiff, brown, SANDY CLAY, some gravel			4		
			5 7	3.4 B	19
			3		
		-15	4 5	1.1 B	16
			3		
			3 4	1.9 B	17
	714.0				
Medium stiff to stiff, Brown, CLAY, some sand and gravel, trace silt			3		
		-20	3 5	2.1 B	18
Medium stiff to stiff, Brown, CLAY, some sand and gravel, trace silt *(continued)*			4		
			4 21	1.9 B	16
			16		
		-25	5 5	1.3 B	20
			3		
			3 5	1.9 B	20
			3		
	702.5	-30	4 6	2.6 B	21
Boring terminated at 30 feet.					
		-35			
		-40			

The Unconfined Compressive Strength (UCS) Failure Mode is indicated by (B-Bulge, S-Shear, P-Penetrometer, M-Modified SPT)
The SPT (N value) is the sum of the last two blow values in each sampling zone (AASHTO T206)

BBS, form 137 (Rev. 8-99)

SOIL BORING LOG

gonzalez COMPANIES, LLC

Page 1 of 1

Date 24/6/2

ROUTE FAP 342 DESCRIPTION Overhead Sign Boring LOGGED BY Gonzalez (OG)

SECTION 2018-100-BR LOCATION , SEC. 7, TWP. 41N, RNG. 11E, 3rd PM,
Latitude 42.07841299, Longitude -88.0288805

COUNTY Cook DRILLING METHOD Hollow Stem Auger (8" O.D., 3.25" I.D.) HAMMER TYPE Auto 140 lb HE 91

STRUCT. NO. 1S016S053L000.0-002
Station 1191+50.00

BORING NO. GC-78
Station 2191+19
Offset 34.8 ft RT
Ground Surface Elev. 732.4 ft

Surface Water Elev. ft
Stream Bed Elev. ft

Groundwater Elev.:
First Encounter Dry ft
Upon Completion Dry ft
After Hrs. Filled ft

Description	Elev.	DEPTH (ft)	BLOWS (/6")	UCS Qu (tsf)	MOIST (%)
Asphalt - 17"	731.0		13		
Aggregate Base - 8"	730.3		4 2		14
Medium Stiff, Blacklish Brown, CLAY, some gravel and sand, organic			2		
		-5	2 5		27
	726.4				
Medium Stiff to Stiff, Brown, CLAY, some sand			3		
			4 8	3.5 S	17
			4		
		-10	6 6	3.6 B	17
	721.4				
Stiff, Brown, CLAY, some gravel and silt			3		
			7 8	4.0 B/S	17
			4		
		-15	5 7	4.8 S	14
			3		
			4 6	3.1 B/S	15
			3		
		-20	3 5	2.1 B	17
Stiff, Brown, CLAY, some gravel and silt *(continued)*			3		
			3 6	3.3 B	17
			3		
		-25	4 5	1.6 B	17
			2		
			3 4	1.6 B	18
			3		
	702.4	-30	4 6	1.8 B	18
Boring terminated at 30 feet.					
		-35			
		-40			

The Unconfined Compressive Strength (UCS) Failure Mode is indicated by (B-Bulge, S-Shear, P-Penetrometer, M-Modified SPT)
The SPT (N value) is the sum of the last two blow values in each sampling zone (AASHTO T206)

BBS, form 137 (Rev. 8-99)

MODEL: Default
FILE NAME: S:\0L6300-6399\6346\113\Drawings\CADMicro-SS4\CAD_Sheets\C3-D162N91-sht-soil boring logs-S4.dgn

STRAND ASSOCIATES
1170 SOUTH HOUBOLT ROAD
JOLIET, ILLINOIS 60431
(815) 744-4200

USER NAME = tylerhe	DESIGNED - TCH	REVISED -	
	DRAWN - DJW	REVISED -	
PLOT SCALE = 0.1667 ' / in.	CHECKED - MAG	REVISED -	
PLOT DATE = 9/26/2024	DATE - 7/25/2024	REVISED -	

STATE OF ILLINOIS
DEPARTMENT OF TRANSPORTATION

SOIL BORING LOGS - 2

SCALE: SHEET 2 OF 3 SHEETS STA. TO STA.

F.A.P. RTE.	SECTION	COUNTY	TOTAL SHEETS	SHEET NO.
342	(531) BR 23	COOK	1357	464
		CONTRACT NO. 62W38		
	ILLINOIS	FED. AID PROJECT		

SOIL BORING LOG

Page 1 of 1

Date 23/8/4

ROUTE FAP 342 DESCRIPTION Sign Boring - Euclid B LOGGED BY Gonzalez (BR)

SECTION 2018-100-BR LOCATION NE 1/4, SEC. 26, TWP. 42N, RNG. 10E, 3rd PM,
Latitude 42.0921540, Longitude -088.0297040

COUNTY Cook DRILLING METHOD Hollow Stem Auger (8" O.D., 3.25" I.D.) HAMMER TYPE Auto 140 lb HE 91

STRUCT. NO. 1S016S053R000.0-005
Station 1242+85.00

BORING NO. GC-17
Station 3242+71
Offset 25.2 ft RT
Ground Surface Elev. 732.0 ft

Surface Water Elev. ft
Stream Bed Elev. ft

Groundwater Elev.:
First Encounter Dry ft
Upon Completion Dry ft
After Hrs. Filled ft

Description	Elev.	DEPTH (ft)	BLOWS (/6")	UCS Qu (tsf)	MOIST (%)
CONCRETE - 12"	731.0				
Stiff, Brown, Dry to Moist, CLAY, Trace Sand, Trace Gravel			3		
			3 6	3.4 B	20
			4		
		-5	8 9	3.3 B	14
			3		
			5 9	3.2 B	15
			2		
		-10	4 6	2.1 B	15
			3		
			4 6	2.5 B	14
			2		
		-15	4 4	1.6 B	14
			4		
			5 7	1.9 B	12
			3		
		-20	4 6	1.6 B	18
Stiff, Brown, Dry to Moist, CLAY, Trace Sand, Trace Gravel *(continued)*			6		
			7 8	1.4 B	17
			5		
		-25	5 5	0.8 B	18
			3		
			5 7	1.8 B	21
	704.5				
Boring terminated at 27.5 feet.					
		-30			
		-35			
		-40			

The Unconfined Compressive Strength (UCS) Failure Mode is indicated by (B-Bulge, S-Shear, P-Penetrometer, M-Modified SPT)
The SPT (N value) is the sum of the last two blow values in each sampling zone (AASHTO T206)

BBS, form 137 (Rev. 8-99)

SOIL BORING LOG

Page 1 of 1

Date 23/5/11

ROUTE FAP 342 DESCRIPTION Sign Boring - Euclid A LOGGED BY Gonzalez (BR)

SECTION 2018-100-BR LOCATION NE 1/4, SEC. 26, TWP. 42N, RNG. 10E, 3rd PM,
Latitude 42.09220061, Longitude 88.02992254

COUNTY Cook DRILLING METHOD Hollow Stem Auger (8" O.D., 3.25" I.D.) HAMMER TYPE Auto 140 lb HE 105

STRUCT. NO. 1S016S053R000.0-005
Station 1242+85.00

BORING NO. GC-26
Station 3242+65
Offset 36.2 ft LT
Ground Surface Elev. 732.1 ft

Surface Water Elev. ft
Stream Bed Elev. ft

Groundwater Elev.:
First Encounter 713.6 ft ▼
Upon Completion 723.6 ft ▽
After Hrs. Filled ft

Description	Elev.	DEPTH (ft)	BLOWS (/6")	UCS Qu (tsf)	MOIST (%)
PAVEMENT	731.3				
Fine SAND			11		
			8 7		7
	729.1				
Medium Stiff to Stiff, Brown, Moist to Wet, CLAY, Trace Sand, Trace Gravel			2		
		-5	2 2	1.4 B	18
			4		
			5 6	2.7 B	14
		▽	3		
		-10	4 5	2.9 B	14
			3		
			4 5	2.6 B	12
			3		
		-15	4 6	1.6 B	16
			2		
Silt Seam			2 3	2.1 B	19
		▼	3		
		-20	3 3	1.6 B	19
Medium Stiff to Stiff, Brown, Moist to Wet, CLAY, Trace Sand, Trace Gravel *(continued)*			6		
			7 10	2.9 B	23
	708.6				
Medium Dense, Brown, Wet, Fine, SAND, Trace Fines, Trace Gravel			3		
		-25	7 7		22
	706.6				
Stiff, Brown, Wet, CLAY, Trace Sand, Trace Gravel			3		
			6 4	1.2 B	23
	704.6				
Boring terminated at 27.5 feet.					
		-30			
		-35			
		-40			

The Unconfined Compressive Strength (UCS) Failure Mode is indicated by (B-Bulge, S-Shear, P-Penetrometer, M-Modified SPT)
The SPT (N value) is the sum of the last two blow values in each sampling zone (AASHTO T206)

BBS, form 137 (Rev. 8-99)

SIGN DETAIL
1:75

SIGN NUMBER	name		
WIDTH x HGHT.	31'-0" x 14'-0"		
BORDER WIDTH	2"		
CORNER RADIUS	12"		
MOUNTING	Overhead		
BACKGROUND	TYPE:	Reflective	
	COLOR:	Green	
LEGEND/BORDER	TYPE:	Reflective	
	COLOR:	White/White	

SYMBOL	ROT	X	Y	WID	HT
M1_1	0	115	110.8	45	36

Panel Style: guide_exp_advance_a.ssi
Dimensions are in inches.tenths

Panel Style: guide_exp_advance_a.ssi
M.U.T.C.D.: 2009 Edition

Letter locations are panel edge to lower left corner

LETTER POSITIONS (X)

																																				LENGTH	SERIES/SIZE
E	A	S	T																																		E 2000
178.1	193.4	210.4	224.2																																	57.4	18,15
C	h	i	c	a	g	o																															EM 2000
115.1	136.9	158.1	168.3	185.9	205.3	224.7																														123.2	20/15
N	E	X	T		E	X	I	T																													E 2000
22.6	33.3	42.2	52	59.5	69.5	78.4	89.1	92.6																												77.5	10
B	i	e	s	t	e	r	f	i	e	l	d		R	d																							EM 2000
115.1	136.9	147.1	164.3	181.7	196.7	216.1	228.9	243.5	253.7	273.1	283.3	296.5	316.5	336.3																						234.4	20/15
L	E	F	T		L	A	N	E	S																												E 2000
115.1	126.1	137.5	147.5	156.5	168.5	178.4	192.7	205.5	216.2																											110.9	12

MODEL: Default
FILE NAME: G:\shortcut-targets-by-id\1Gd6696RWnY4n8f5fU-OCAUotlan3Hmca192022-IDOT_Strand Associates\Design\CADSheets\C3-D162N91-sht-signdetail01-H53-PIN.dgn

PIN POINT PRECISION ENGINEERING
1016 W. JACKSON BLVD.
CHICAGO, ILLINOIS 60607
(312) 776-5591

USER NAME = Abdul Khalique	DESIGNED - AK	REVISED -
	DRAWN - MMA	REVISED -
PLOT SCALE = 50.0000 ' / in.	CHECKED - AAS	REVISED -
PLOT DATE = 8/23/2024	DATE -	REVISED -

STATE OF ILLINOIS
DEPARTMENT OF TRANSPORTATION

IL ROUTE 53
SIGNING DETAIL

SCALE: 1" = 50' | SHEET 1 OF 7 SHEETS | STA. TO STA.

F.A.P. RTE.	SECTION	COUNTY	TOTAL SHEETS	SHEET NO.
342	(531)BR 23	COOK	1211	468
		CONTRACT NO. 62W38		
		ILLINOIS	FED. AID PROJECT	

SIGN DETAIL
1:75

BORDER
R=12"
TH=2"

Panel Style: guide_exp_advance_a.ssi
M.U.T.C.D.: 2009 Edition

SIGN NUMBER	name	
WIDTH x HGHT.	15'-0" x 14'-0"	
BORDER WIDTH	2"	
CORNER RADIUS	12"	
MOUNTING	Overhead	
BACKGROUND	TYPE:	Reflective
	COLOR:	Green
LEGEND/BORDER	TYPE:	Reflective
	COLOR:	White/Black/White

SYMBOL	ROT	X	Y	WID	HT
M1_1	0	23.3	109	36	36

Panel Style: guide_exp_advance_a.ssi
Dimensions are in inches.tenths

Letter locations are panel edge to lower left corner

LETTER POSITIONS (X)

																																			LENGTH	SERIES/SIZE
T	O	L	L																																	E 2000
87.5	98.2	111	122.1																																43.6	12
R	o	c	k	f	o	r	d																													EM 2000
23.3	43.1	61.1	80.5	97.9	110.7	130.5	143.5																												133.4	20/15
C	h	i	c	a	g	o																														EM 2000
27.8	49.6	70.8	81	98.6	118	137.4																													123.2	20/15
R	I	G	H	T		L	A	N	E	S																										E 2000
31.2	43.3	48.2	60.7	72.5	81.5	93.5	103.4	117.7	130.6	141.2																									119.8	12

MODEL: Default
FILE NAME: G:\shortcut-targets-by-id\1Gd6696RWnY4n8f5fU-OCAUotlam3tmca192022-IDOT_Strand Associates\Design\CAD\Sheets\C3-D162N91-sht-signdetail-02-IL53-PN.dgn

PIN POINT PRECISION ENGINEERING
1016 W. JACKSON BLVD.
CHICAGO, ILLINOIS 60607
(312) 776-5591

USER NAME = Abdul Khalique	DESIGNED - AK	REVISED -
	DRAWN - MMA	REVISED -
PLOT SCALE = 50.0000 ' / in.	CHECKED - AAS	REVISED -
PLOT DATE = 8/23/2024	DATE -	REVISED -

STATE OF ILLINOIS
DEPARTMENT OF TRANSPORTATION

IL ROUTE 53
SIGNING DETAIL

SCALE: 1" = 50' | SHEET 2 OF 7 SHEETS | STA. TO STA.

F.A.P. RTE.	SECTION	COUNTY	TOTAL SHEETS	SHEET NO.
342	(531)BR 23	COOK	1211	469
		CONTRACT NO. 62W38		
		ILLINOIS	FED. AID PROJECT	

SIGN DETAIL
1:75

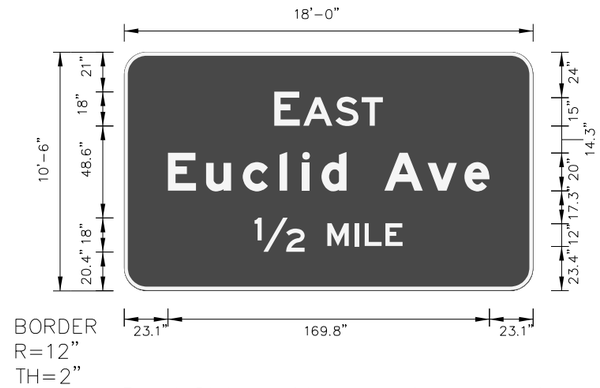

Panel Style: guide_exp_advance_a.ssi
M.U.T.C.D.: 2009 Edition

SIGN NUMBER	name		
WIDTH x HGHT.	18'-0" x 10'-6"		
BORDER WIDTH	2"		
CORNER RADIUS	12"		
MOUNTING	Overhead		
BACKGROUND	TYPE:	Reflective	
	COLOR:	Green	
LEGEND/BORDER	TYPE:	Reflective	
	COLOR:	White/White	

SYMBOL	ROT	X	Y	WID	HT

Panel Style: guide_exp_advance_a.ssi
Dimensions are in inches.tenths

Letter locations are panel edge to lower left corner

LETTER POSITIONS (X)																																			LENGTH	SERIES/SIZE
E	A	S	T																																	E 2000
79.3	94.7	111.6	125.4																																57.4	18,15
E	u	c	l	i	d		A	v	e																											EM 2000
23.1	43.3	62.7	82.1	94.1	104.3	117.5	137.5	160.3	179.7																										169.8	20/15
1/2	M	I	L	E																																E 2000
69	107.3	121.7	127	138																															78.1	18,12

MODEL: Default
FILE NAME: G:\shortcut-targets-by-id\1Gd6696RWnY4n8F5fU-OC4Uotlan3Hmca192022-IDOT_Strand Associates\Design\CADSheets\C3-D162N91-sht-signdetail03-IL53-PIN.dgn

PIN POINT PRECISION ENGINEERING
1016 W. JACKSON BLVD.
CHICAGO, ILLINOIS 60607
(312) 776-5591

USER NAME = Abdul Khalique	DESIGNED - AK	REVISED -
	DRAWN - MMA	REVISED -
PLOT SCALE = 50.0000 ' / in.	CHECKED - AAS	REVISED -
PLOT DATE = 8/23/2024	DATE -	REVISED -

STATE OF ILLINOIS
DEPARTMENT OF TRANSPORTATION

IL ROUTE 53
SIGNING DETAIL

SCALE: 1" = 50' | SHEET 3 OF 7 SHEETS | STA. TO STA.

F.A.P. RTE.	SECTION	COUNTY	TOTAL SHEETS	SHEET NO.
342	(531)BR 23	COOK	1211	470
		CONTRACT NO. 62W38		
		ILLINOIS	FED. AID PROJECT	

SIGN DETAIL

1:75

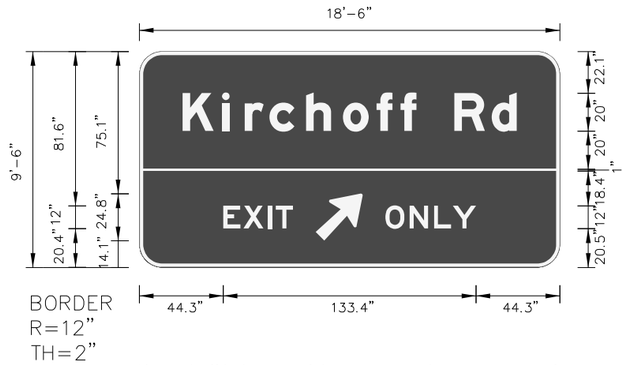

Panel Style: guide_exp_advance_a.ssi
M.U.T.C.D.: 2009 Edition

SIGN NUMBER	name	
WIDTH x HGHT.	18'-6" x 9'-6"	
BORDER WIDTH	2"	
CORNER RADIUS	12"	
MOUNTING	Overhead	
BACKGROUND	TYPE:	Reflective
	COLOR:	Green /Green
LEGEND/BORDER	TYPE:	Reflective
	COLOR:	White/White

SYMBOL	ROT	X	Y	WID	HT
AR_Type A	315	93	14.1	20	31.5

Panel Style: guide_exp_advance_a.ssi
Dimensions are in inches.tenths

Letter locations are panel edge to lower left corner

LETTER POSITIONS (X)

																																			LENGTH	SERIES/SIZE
K	i	r	c	h	o	f	f		R	d																										EM 2000
22.8	43.6	55.6	68.6	88	107.4	125.2	137.8	146.2	166.2	186																									176.4	20/15
E	X	I	T																																	E 2000
44.3	55	67.8	72																																36.7	12
O	N	L	Y																																	E 2000
129.8	142.7	155.5	165.5																																47.9	12

MODEL: Default
FILE NAME: G:\shortcut-targets-by-id\1Gd6696RWnY4n8F5fU-OCAUotlam3tmca192022-IDOT_Strand Associates\Design\CADSheets\C3-D162N91-sht-signdetail-04-IL53-PIN.dgn

PIN POINT PRECISION ENGINEERING
1016 W. JACKSON BLVD.
CHICAGO, ILLINOIS 60607
(312) 776-5591

USER NAME = Abdul Khalique	DESIGNED - AK	REVISED -
	DRAWN - MMA	REVISED -
PLOT SCALE = 50.0000 ' / in.	CHECKED - AAS	REVISED -
PLOT DATE = 8/23/2024	DATE -	REVISED -

STATE OF ILLINOIS
DEPARTMENT OF TRANSPORTATION

IL ROUTE 53
SIGNING DETAIL

SCALE: 1" = 50' | SHEET 4 OF 7 SHEETS | STA. TO STA.

F.A.P. RTE.	SECTION	COUNTY	TOTAL SHEETS	SHEET NO.
342	(531)BR 23	COOK	1211	471

CONTRACT NO. 62W38

ILLINOIS | FED. AID PROJECT

SIGN DETAIL

1:75

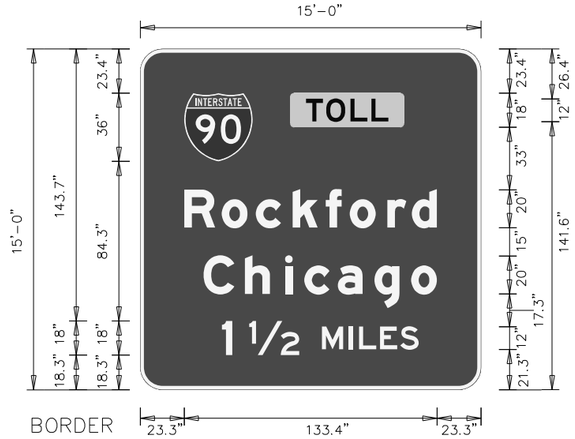

BORDER
R=12"
TH=2"

Panel Style: guide_exp_advance_a.ssi
M.U.T.C.D.: 2009 Edition

Panel Style: guide_exp_advance_a.ssi
Dimensions are in inches.tenths

Letter locations are panel edge to lower left corner

SIGN NUMBER	name		
WIDTH x HGHT.	15'-0" x 15'-0"		
BORDER WIDTH	2"		
CORNER RADIUS	12"		
MOUNTING	Overhead		
BACKGROUND	TYPE:	Reflective	
	COLOR:	Green	
LEGEND/BORDER	TYPE:	Reflective	
	COLOR:	White/Black/White	

SYMBOL	ROT	X	Y	WID	HT
M1_1	0	23.3	120.7	36	36

LETTER POSITIONS (X)

																																			LENGTH	SERIES/SIZE
T	O	L	L																																	E 2000
87.5	98.2	111	122.1																																43.6	12
R	o	c	k	f	o	r	d																													EM 2000
23.3	43.1	61.1	80.5	97.9	110.7	130.5	143.5																												133.4	20/15
C	h	i	c	a	g	o																														EM 2000
33.5	55.3	76.5	86.7	104.3	123.7	143.1																													123.2	20/15
1	1/2	M	I	L	E	S																														E 2000
43.2	57.6	95.9	110.3	115.6	126.6	137.3																													103.9	18,12

MODEL: Default
FILE NAME: G:\shortcut-targets-by-id\1Gd6696RWnY4n8f5fU-OCAUotlam3tmca192022-IDOT_Strand Associates\Design\CADSheets\C3-D162N91-sht-signdetail-05-H53-PN_.dgn

PIN POINT PRECISION ENGINEERING
1016 W. JACKSON BLVD.
CHICAGO, ILLINOIS 60607
(312) 776-5591

USER NAME = Abdul Khalique	DESIGNED - AK	REVISED -
	DRAWN - MMA	REVISED -
PLOT SCALE = 50.0000 ' / in.	CHECKED - AAS	REVISED -
PLOT DATE = 8/23/2024	DATE -	REVISED -

STATE OF ILLINOIS
DEPARTMENT OF TRANSPORTATION

IL ROUTE 53
SIGNING DETAIL

SCALE: 1" = 50' | SHEET 5 OF 7 SHEETS | STA. TO STA.

F.A.P. RTE.	SECTION	COUNTY	TOTAL SHEETS	SHEET NO.
342	(531)BR 23	COOK	1211	472

CONTRACT NO. 62W38

ILLINOIS | FED. AID PROJECT

SIGN DETAIL
1:75

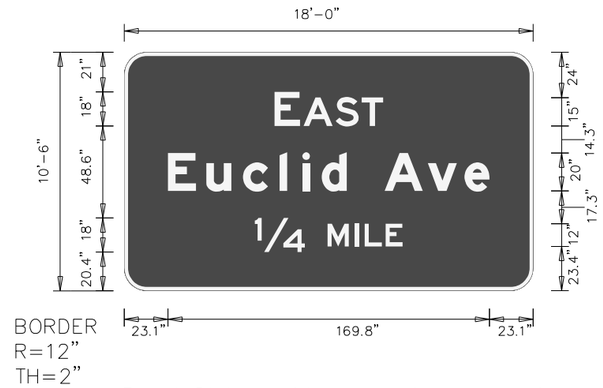

SIGN NUMBER	name				
WIDTH x HGHT.	18'-0" x 10'-6"				
BORDER WIDTH	2"				
CORNER RADIUS	12"				
MOUNTING	Overhead				
BACKGROUND	TYPE:	Reflective			
	COLOR:	Green			
LEGEND/BORDER	TYPE:	Reflective			
	COLOR:	White/White			

SYMBOL	ROT	X	Y	WID	HT

Panel Style: guide_exp_advance_a.ssi
Dimensions are in inches.tenths

Panel Style: guide_exp_advance_a.ssi
M.U.T.C.D.: 2009 Edition

Letter locations are panel edge to lower left corner

LETTER POSITIONS (X)																																			LENGTH	SERIES/SIZE
E	A	S	T																																	E 2000
79.3	94.7	111.6	125.4																																57.4	18,15
E	u	c	l	i	d		A	v	e																											EM 2000
23.1	43.3	62.7	82.1	94.1	104.3	117.5	137.5	160.3	179.7																										169.8	20/15
1/4	M	I	L	E																																E 2000
69	107.3	121.7	127	138																															78.1	18,12

MODEL: Default
FILE NAME: G:\shortcut-targets-by-id\1Gd6696RWnY4n8F5fU-OCAUotlan3Hmca192022-IDOT_Strand Associates\Design\CADSheets\C3-D162N91-sht-signdetail-06-HL53-PN_.dgn

PIN POINT PRECISION ENGINEERING
1016 W. JACKSON BLVD.
CHICAGO, ILLINOIS 60607
(312) 776-5591

USER NAME = Abdul Khalique	DESIGNED - AK	REVISED -
	DRAWN - MMA	REVISED -
PLOT SCALE = 50.0000 ' / in.	CHECKED - AAS	REVISED -
PLOT DATE = 8/23/2024	DATE -	REVISED -

STATE OF ILLINOIS
DEPARTMENT OF TRANSPORTATION

IL ROUTE 53
SIGNING DETAIL

SCALE: 1" = 50' | SHEET 6 OF 7 SHEETS | STA. TO STA.

F.A.P. RTE.	SECTION	COUNTY	TOTAL SHEETS	SHEET NO.
342	(531)BR 23	COOK	1211	473
		CONTRACT NO. 62W38		
		ILLINOIS	FED. AID PROJECT	

SIGN DETAIL
1:75

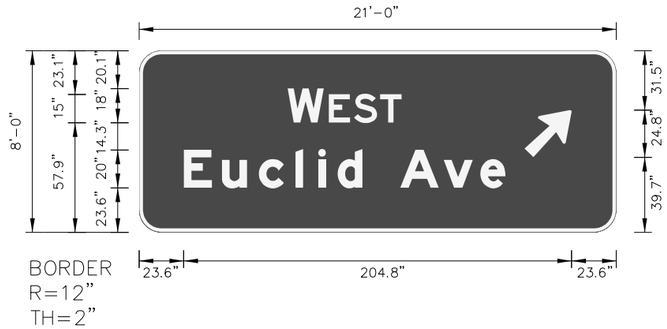

Panel Style: guide_exp_advance_a.ssi
M.U.T.C.D.: 2009 Edition

SIGN NUMBER	name	
WIDTH x HGHT.	21'-0" x 8'-0"	
BORDER WIDTH	2"	
CORNER RADIUS	12"	
MOUNTING	Overhead	
BACKGROUND	TYPE:	Reflective
	COLOR:	Green
LEGEND/BORDER	TYPE:	Reflective
	COLOR:	White/White

SYMBOL	ROT	X	Y	WID	HT
AR_Type A	315	203.6	39.7	20	31.5

Panel Style: guide_exp_advance_a.ssi
Dimensions are in inches.tenths

Letter locations are panel edge to lower left corner

LETTER POSITIONS (X)

																																			LENGTH	SERIES/SIZE
W	E	S	T																																	E 2000
78.4	100.2	113.5	127.3																																60.2	18,15
E	u	c	l	i	d		A	v	e																											EM 2000
23.6	43.8	63.2	82.6	94.6	104.8	118	138	160.8	180.2																										169.8	20/15

MODEL: Default
FILE NAME: G:\shortcut-targets-by-id\1Gq6696RWnY4n8F5fU-OCAUoHam3Hmca192022-IDOT_Strand Associates\Design\CADSheets\C3-D162N91-sht-signdetail07-IL53-PIN.dgn

PIN POINT PRECISION ENGINEERING
1016 W. JACKSON BLVD.
CHICAGO, ILLINOIS 60607
(312) 776-5591

USER NAME = Abdul Khalique	DESIGNED - AK	REVISED -
	DRAWN - MMA	REVISED -
PLOT SCALE = 50.0000 ' / in.	CHECKED - AAS	REVISED -
PLOT DATE = 8/23/2024	DATE -	REVISED -

STATE OF ILLINOIS
DEPARTMENT OF TRANSPORTATION

IL ROUTE 53
SIGNING DETAIL

SCALE: 1" = 50' | SHEET 7 OF 7 SHEETS | STA. TO STA.

F.A.P. RTE.	SECTION	COUNTY	TOTAL SHEETS	SHEET NO.
342	(531)BR 23	COOK	1211	474
		CONTRACT NO. 62W38		
		ILLINOIS	FED. AID PROJECT	

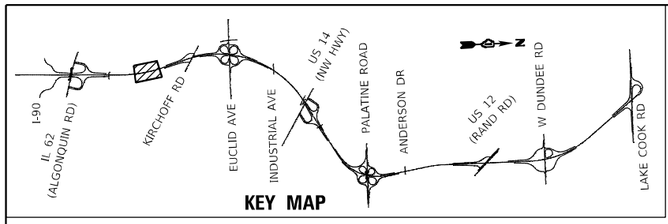

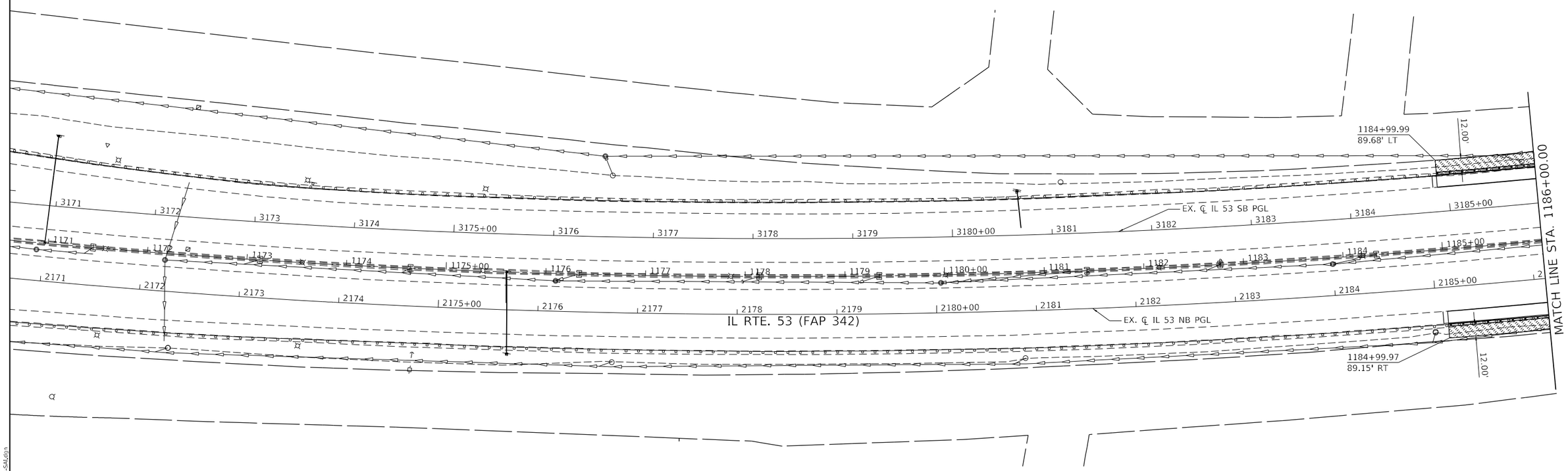

PERMANENT EROSION CONTROL LEGEND

- SEEDING, CLASS 2A WITH EROSION CONTROL BLANKET
- SEEDING, CLASS 2A WITH HEAVY DUTY EROSION CONTROL BLANKET
- SEEDING, CLASS 3 WITH HEAVY DUTY EROSION CONTROL BLANKET
- SEEDING, CLASS 4A (MODIFIED) WITH EROSION CONTROL BLANKET
- SEEDING, CLASS 4B/5B MIX WITH EROSION CONTROL BLANKET
- STONE RIPRAP, CLASS A3
- WETLANDS
- SURFACE WATERS
- PROPOSED TREE
- PROPOSED SHRUB

ABBREVIATIONS OF COMMON NAMES

SR (SMOOTH SUMAC)	SHS (STAGHORN SUMAC)
AM (AMERICAN HORNBEAM)	GMSM (GREEN MOUNTAIN SUGAR MAPLE)
HM (COMMON HACKBERRY)	EKC (EXPRESSO KENTUCKY COFFEETREE)
PS (PRAIRIE SENTINEL HACKBERRY)	AHB (AMERICAN HOPHORNBEAM)
KC (KENTUCKY COFFEETREE)	CSO (CRIMSON SPIRE OAK)
SWO (SWAMP WHITE OAK)	CSPL (CHINA SNOW PEKING LILAC)
CO (CHINKAPIN OAK)	MBCJ (MOUNTBATTEN CHINESE JUNIPER)
CBC (COMMON BALD CYPRESS)	BHS (BLACK HILLS SPRUCE)
AS (APPLE SERVICEBERRY)	SS (SERBIAN SPRUCE)
	BO (BUR OAK)

NOTES

1. ALL LANDSCAPED AREAS SHALL INCLUDE 6" OF NEW TOPSOIL UNLESS OTHERWISE NOTED. THIS WORK SHALL BE PAID FOR AS TOPSOIL FURNISH AND PLACE, 6"
2. FOR SLOPES STEEPER THAN 1:3, USE HEAVY DUTY EROSION CONTROL BLANKET.
3. SEE SHEET 495 FOR LANDSCAPING SCHEDULE

STRAND ASSOCIATES®
1170 SOUTH HOUBOLT ROAD
JOLIET, ILLINOIS 60431
(815) 744-4200

USER NAME = noaha	DESIGNED - MAG	REVISED -
	DRAWN - DJW	REVISED -
PLOT SCALE = 100.0000 ' / in.	CHECKED - DWG	REVISED -
PLOT DATE = 8/22/2024	DATE - 8/23/2024	REVISED -

STATE OF ILLINOIS
DEPARTMENT OF TRANSPORTATION

IL ROUTE 53
PERMANENT EROSION CONTROL PLAN

SCALE: 1" = 50' | SHEET 1 OF 21 SHEETS | STA. 1170+95.50 TO STA. 1186+00.00

F.A.P. RTE.	SECTION	COUNTY	TOTAL SHEETS	SHEET NO.
342	(531) BR 23	COOK	1211	475
		CONTRACT NO. 62W38		
		ILLINOIS FED. AID PROJECT		

MODEL: Default
FILE NAME: S:\OL\6300-6399\6346113\Drawings\CADMicro-SSA\CAD_Sheets\C3-D162N91-dh-gem-4rps-73153-SAL.dgn

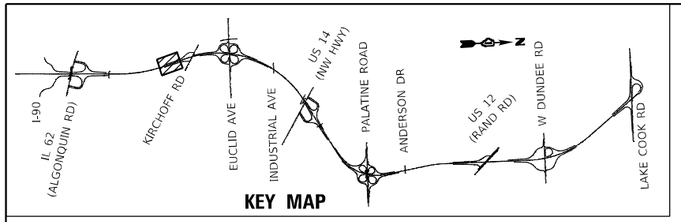

KEY MAP

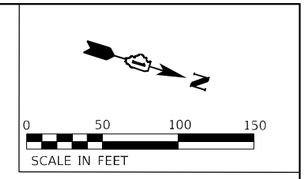

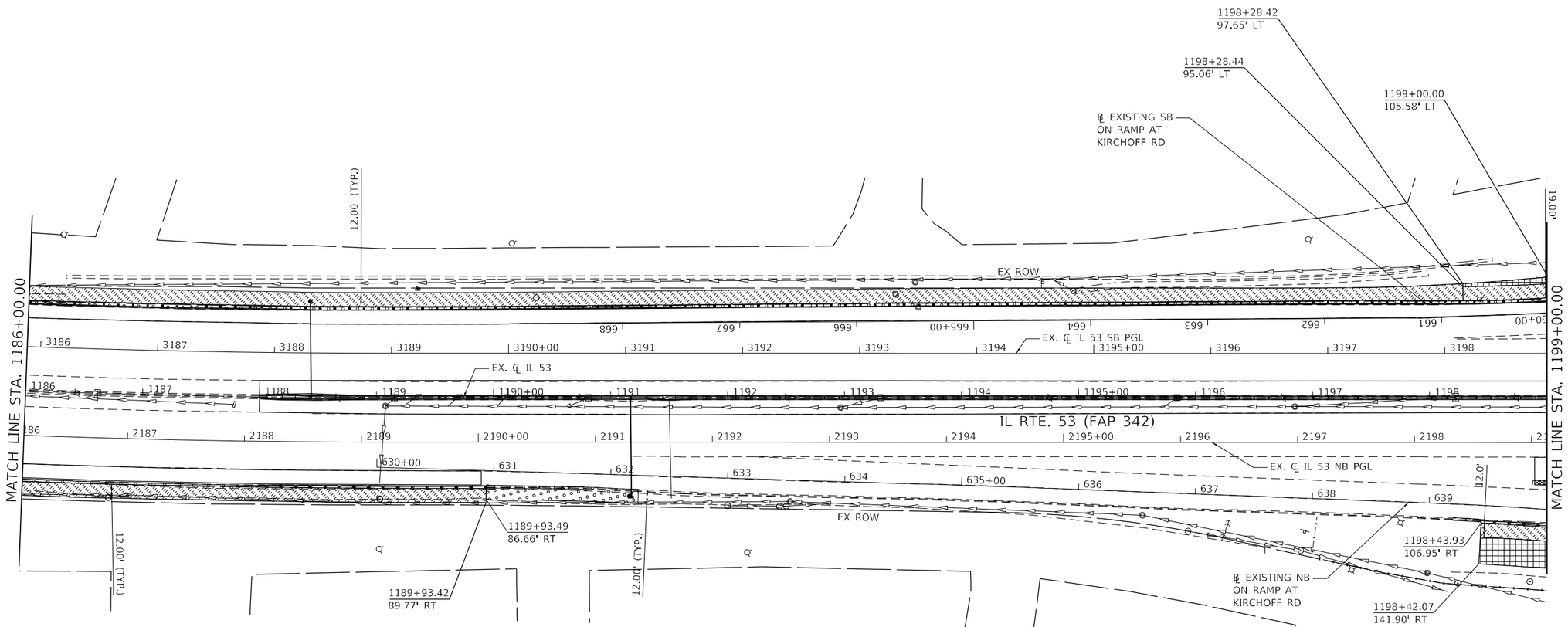

PERMANENT EROSION CONTROL LEGEND

- SEEDING, CLASS 2A WITH EROSION CONTROL BLANKET
- SEEDING, CLASS 2A WITH HEAVY DUTY EROSION CONTROL BLANKET
- SEEDING, CLASS 3 WITH HEAVY DUTY EROSION CONTROL BLANKET
- SEEDING, CLASS 4A (MODIFIED) WITH EROSION CONTROL BLANKET
- SEEDING, CLASS 4B/5B MIX WITH EROSION CONTROL BLANKET
- STONE RIPRAP, CLASS A3
- WETLANDS
- SURFACE WATERS
- PROPOSED TREE
- PROPOSED SHRUB

ABBREVIATIONS OF COMMON NAMES

SR (SMOOTH SUMAC)	SHS (STAGHORN SUMAC)
AM (AMERICAN HORNBEAM)	GMSM (GREEN MOUNTAIN SUGAR MAPLE)
HM (COMMON HACKBERRY)	EKC (EXPRESSO KENTUCKY COFFEETREE)
PS (PRAIRIE SENTINEL HACKBERRY)	AHB (AMERICAN HOPHORNBEAM)
KC (KENTUCKY COFFEETREE)	CSO (CRIMSON SPIRE OAK)
SWO (SWAMP WHITE OAK)	CSPL (CHINA SNOW PEKING LILAC)
CO (CHINKAPIN OAK)	MBCJ (MOUNTBATTEN CHINESE JUNIPER)
CBC (COMMON BALD CYPRESS)	BHS (BLACK HILLS SPRUCE)
AS (APPLE SERVICEBERRY)	SS (SERBIAN SPRUCE)
	BO (BUR OAK)

NOTES

1. ALL LANDSCAPED AREAS SHALL INCLUDE 6" OF NEW TOPSOIL UNLESS OTHERWISE NOTED. THIS WORK SHALL BE PAID FOR AS TOPSOIL FURNISH AND PLACE, 6"
2. FOR SLOPES STEEPER THAN 1:3, USE HEAVY DUTY EROSION CONTROL BLANKET.
3. SEE SHEET 495 FOR LANDSCAPING SCHEDULE

STRAND ASSOCIATES®
1170 SOUTH HOUBOLT ROAD
JOLIET, ILLINOIS 60431
(815) 744-4200

USER NAME = vryatts	DESIGNED - MAG	REVISED -	
	DRAWN - DJW	REVISED -	
PLOT SCALE = 100.0000 ' / in.	CHECKED - DWG	REVISED -	
PLOT DATE = 9/23/2024	DATE - 8/23/2024	REVISED -	

STATE OF ILLINOIS
DEPARTMENT OF TRANSPORTATION

IL ROUTE 53
PERMANENT EROSION CONTROL PLAN

SCALE: 1" = 50' | SHEET 2 OF 21 SHEETS | STA. 1186+00.00 TO STA. 1199+00.00

F.A.P. RTE.	SECTION	COUNTY	TOTAL SHEETS	SHEET NO.
342	(531) BR 23	COOK	1211	476
		CONTRACT NO. 62W38		
		ILLINOIS	FED. AID PROJECT	

MODEL: Default
FILE NAME: S:\JOL\6300-6399\63461\13\Drawings\CADD\Micro-SS4\CAD Sheets\C3-0162N91-IR-perm-eros-8-IL53-SA.dgn

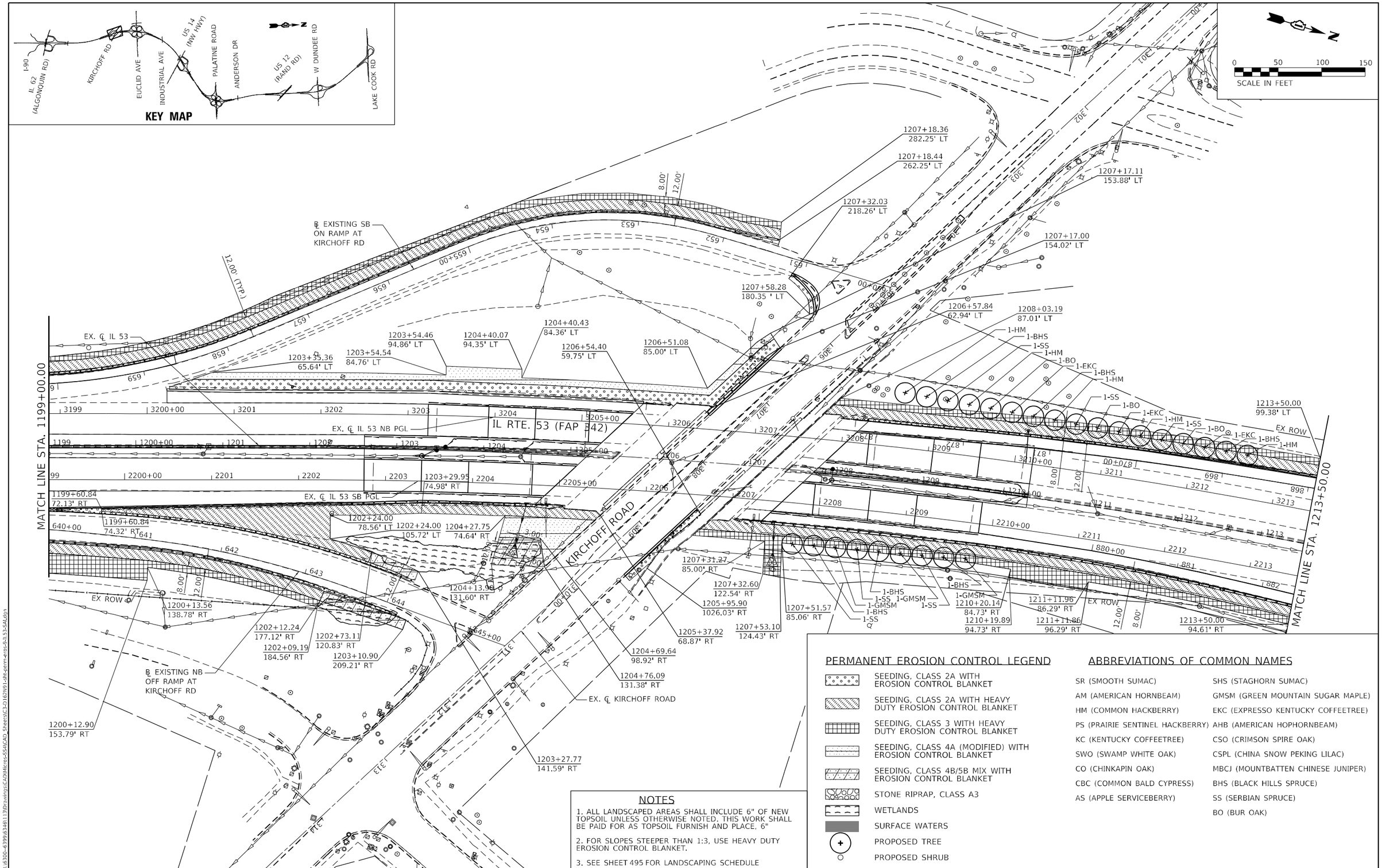

NOTES

1. ALL LANDSCAPED AREAS SHALL INCLUDE 6" OF NEW TOPSOIL UNLESS OTHERWISE NOTED. THIS WORK SHALL BE PAID FOR AS TOPSOIL FURNISH AND PLACE, 6"
2. FOR SLOPES STEEPER THAN 1:3, USE HEAVY DUTY EROSION CONTROL BLANKET.
3. SEE SHEET 495 FOR LANDSCAPING SCHEDULE

PERMANENT EROSION CONTROL LEGEND

- SEEDING, CLASS 2A WITH EROSION CONTROL BLANKET
- SEEDING, CLASS 2A WITH HEAVY DUTY EROSION CONTROL BLANKET
- SEEDING, CLASS 3 WITH HEAVY DUTY EROSION CONTROL BLANKET
- SEEDING, CLASS 4A (MODIFIED) WITH EROSION CONTROL BLANKET
- SEEDING, CLASS 4B/5B MIX WITH EROSION CONTROL BLANKET
- STONE RIPRAP, CLASS A3
- WETLANDS
- SURFACE WATERS
- PROPOSED TREE
- PROPOSED SHRUB

ABBREVIATIONS OF COMMON NAMES

SR (SMOOTH SUMAC)	SHS (STAGHORN SUMAC)
AM (AMERICAN HORNBEAM)	GMSM (GREEN MOUNTAIN SUGAR MAPLE)
HM (COMMON HACKBERRY)	EKC (EXPRESSO KENTUCKY COFFEETREE)
PS (PRAIRIE SENTINEL HACKBERRY)	AHB (AMERICAN HOPHORNBEAM)
KC (KENTUCKY COFFEETREE)	CSO (CRIMSON SPIRE OAK)
SWO (SWAMP WHITE OAK)	CSPL (CHINA SNOW PEKING LILAC)
CO (CHINKAPIN OAK)	MBCJ (MOUNTBATTEN CHINESE JUNIPER)
CBC (COMMON BALD CYPRESS)	BHS (BLACK HILLS SPRUCE)
AS (APPLE SERVICEBERRY)	SS (SERBIAN SPRUCE)
	BO (BUR OAK)

MODEL: Default
FILE NAME: S:\JOL\6300-6399\6346\130\Drawings\CADMicro-SS4\CAD_Sheets\C3-D162N91-alt-sjerm-erop-9il53-SAL.dgn

STRAND ASSOCIATES®
1170 SOUTH HOUBOLT ROAD
JOLIET, ILLINOIS 60431
(815) 744-4200

USER NAME = vyatts	DESIGNED - MAG	REVISED -	
	DRAWN - DJW	REVISED -	
PLOT SCALE = 100.0000 ' / in.	CHECKED - DWG	REVISED -	
PLOT DATE = 9/23/2024	DATE - 8/23/2024	REVISED -	

STATE OF ILLINOIS
DEPARTMENT OF TRANSPORTATION

IL ROUTE 53
PERMANENT EROSION CONTROL PLAN

SCALE: 1" = 50' | SHEET 3 OF 21 SHEETS | STA. 1199+00.00 TO STA. 1213+50.00

F.A.P. RTE.	SECTION	COUNTY	TOTAL SHEETS	SHEET NO.
342	(531) BR 23	COOK	1211	477

CONTRACT NO. 62W38
ILLINOIS | FED. AID PROJECT

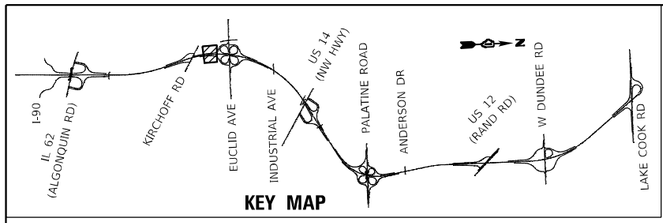

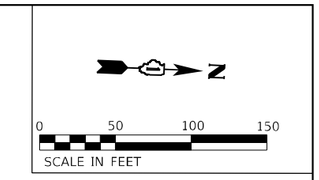

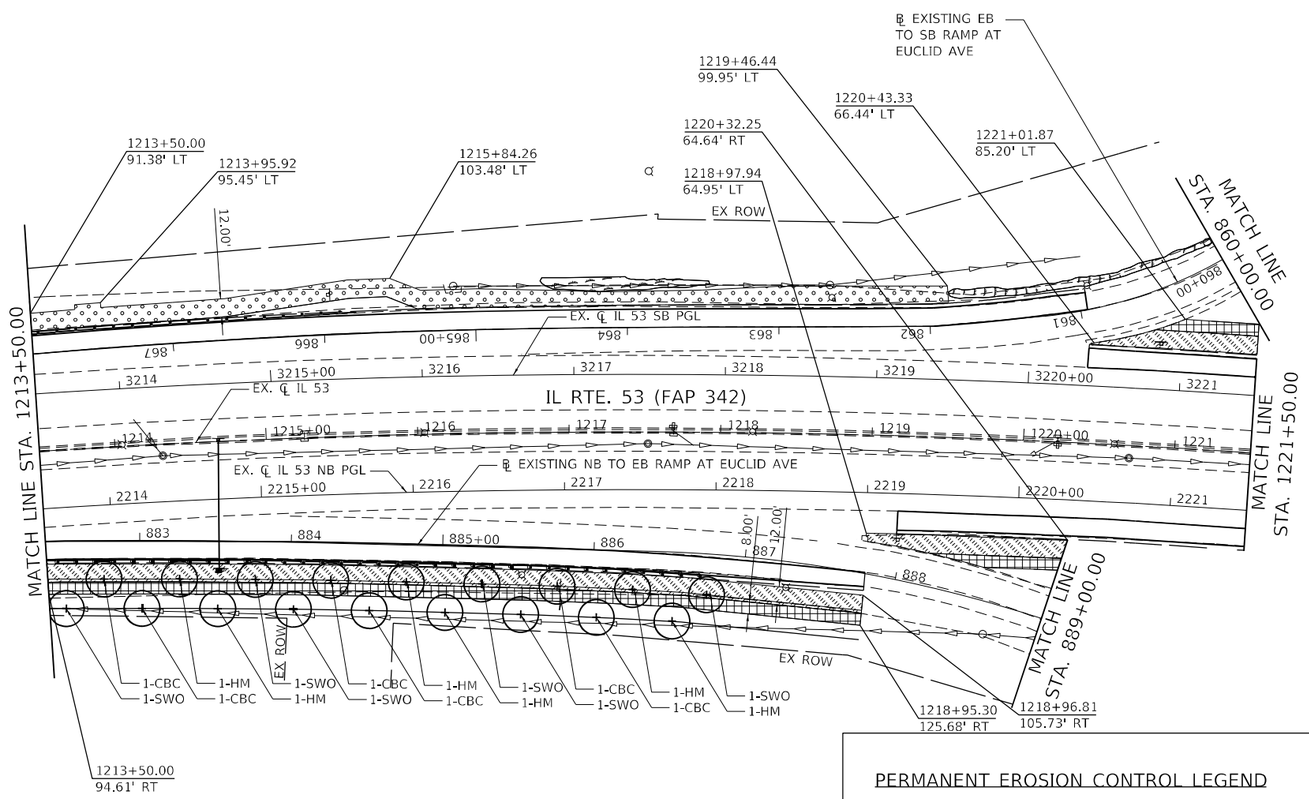

PERMANENT EROSION CONTROL LEGEND

- SEEDING, CLASS 2A WITH EROSION CONTROL BLANKET
- SEEDING, CLASS 2A WITH HEAVY DUTY EROSION CONTROL BLANKET
- SEEDING, CLASS 3 WITH HEAVY DUTY EROSION CONTROL BLANKET
- SEEDING, CLASS 4A (MODIFIED) WITH EROSION CONTROL BLANKET
- SEEDING, CLASS 4B/5B MIX WITH EROSION CONTROL BLANKET
- STONE RIPRAP, CLASS A3
- WETLANDS
- SURFACE WATERS
- PROPOSED TREE
- PROPOSED SHRUB

ABBREVIATIONS OF COMMON NAMES

SR (SMOOTH SUMAC)	SHS (STAGHORN SUMAC)
AM (AMERICAN HORNBEAM)	GMSM (GREEN MOUNTAIN SUGAR MAPLE)
HM (COMMON HACKBERRY)	EKC (EXPRESSO KENTUCKY COFFEETREE)
PS (PRAIRIE SENTINEL HACKBERRY)	AHB (AMERICAN HOPHORNBEAM)
KC (KENTUCKY COFFEETREE)	CSO (CRIMSON SPIRE OAK)
SWO (SWAMP WHITE OAK)	CSPL (CHINA SNOW PEKING LILAC)
CO (CHINKAPIN OAK)	MBCJ (MOUNTBATTEN CHINESE JUNIPER)
CBC (COMMON BALD CYPRESS)	BHS (BLACK HILLS SPRUCE)
AS (APPLE SERVICEBERRY)	SS (SERBIAN SPRUCE)
	BO (BUR OAK)

NOTES

1. ALL LANDSCAPED AREAS SHALL INCLUDE 6" OF NEW TOPSOIL UNLESS OTHERWISE NOTED. THIS WORK SHALL BE PAID FOR AS TOPSOIL FURNISH AND PLACE, 6"
2. FOR SLOPES STEEPER THAN 1:3, USE HEAVY DUTY EROSION CONTROL BLANKET.
3. SEE SHEET 495 FOR LANDSCAPING SCHEDULE

STRAND ASSOCIATES
1170 SOUTH HOUBOLT ROAD
JOLIET, ILLINOIS 60431
(815) 744-4200

USER NAME = wyatts	DESIGNED - MAG	REVISED -	
	DRAWN - DJW	REVISED -	
PLOT SCALE = 100.0000 ' / in.	CHECKED - DWG	REVISED -	
PLOT DATE = 9/23/2024	DATE - 8/23/2024	REVISED -	

STATE OF ILLINOIS
DEPARTMENT OF TRANSPORTATION

IL ROUTE 53
PERMANENT EROSION CONTROL PLAN

SCALE: 1" = 50' | SHEET 4 OF 21 SHEETS | STA. 1213+50.00 TO STA. 1221+50.00

F.A.P. RTE.	SECTION	COUNTY	TOTAL SHEETS	SHEET NO.
342	(531) BR 23	COOK	1211	478
		CONTRACT NO. 62W38		
		ILLINOIS FED. AID PROJECT		

MODEL: Default
FILE NAME: S:\IDOT\6300-6399\63461\13\Drawings\CADD\Micro=SS4\CAD_Sheets\C3-01620N91-sht-perm-eros-104153-SAI.dgn

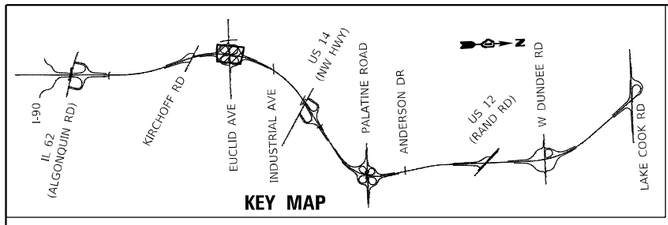

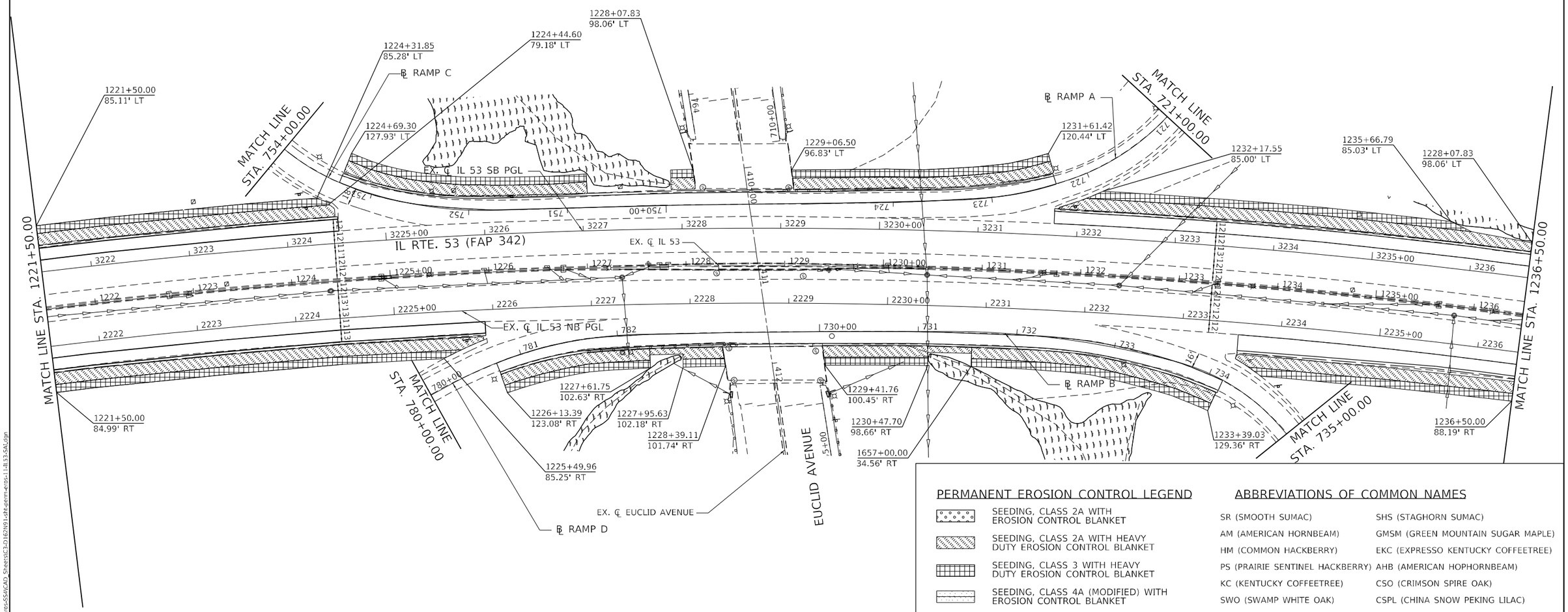

PERMANENT EROSION CONTROL LEGEND

- SEEDING, CLASS 2A WITH EROSION CONTROL BLANKET
- SEEDING, CLASS 2A WITH HEAVY DUTY EROSION CONTROL BLANKET
- SEEDING, CLASS 3 WITH HEAVY DUTY EROSION CONTROL BLANKET
- SEEDING, CLASS 4A (MODIFIED) WITH EROSION CONTROL BLANKET
- SEEDING, CLASS 4B/5B MIX WITH EROSION CONTROL BLANKET
- STONE RIPRAP, CLASS A3
- WETLANDS
- SURFACE WATERS
- PROPOSED TREE
- PROPOSED SHRUB

ABBREVIATIONS OF COMMON NAMES

SR (SMOOTH SUMAC)	SHS (STAGHORN SUMAC)
AM (AMERICAN HORNBEAM)	GMSM (GREEN MOUNTAIN SUGAR MAPLE)
HM (COMMON HACKBERRY)	EKC (EXPRESSO KENTUCKY COFFEETREE)
PS (PRAIRIE SENTINEL HACKBERRY)	AHB (AMERICAN HOPHORNBEAM)
KC (KENTUCKY COFFEETREE)	CSO (CRIMSON SPIRE OAK)
SWO (SWAMP WHITE OAK)	CSPL (CHINA SNOW PEKING LILAC)
CO (CHINKAPIN OAK)	MBCJ (MOUNTBATTEN CHINESE JUNIPER)
CBC (COMMON BALD CYPRESS)	BHS (BLACK HILLS SPRUCE)
AS (APPLE SERVICEBERRY)	SS (SERBIAN SPRUCE)
	BO (BUR OAK)

NOTES

1. ALL LANDSCAPED AREAS SHALL INCLUDE 6" OF NEW TOPSOIL UNLESS OTHERWISE NOTED. THIS WORK SHALL BE PAID FOR AS TOPSOIL FURNISH AND PLACE, 6"
2. FOR SLOPES STEEPER THAN 1:3, USE HEAVY DUTY EROSION CONTROL BLANKET.
3. SEE SHEET 495 FOR LANDSCAPING SCHEDULE

STRAND ASSOCIATES®
1170 SOUTH HOUBOLT ROAD
JOLIET, ILLINOIS 60431
(815) 744-4200

USER NAME = wyatts	DESIGNED - MAG	REVISED -	
	DRAWN - DJW	REVISED -	
PLOT SCALE = 100.0000 ' / in.	CHECKED - DWG	REVISED -	
PLOT DATE = 9/23/2024	DATE - 8/23/2024	REVISED -	

STATE OF ILLINOIS
DEPARTMENT OF TRANSPORTATION

IL ROUTE 53
PERMANENT EROSION CONTROL PLAN

SCALE: 1" = 50' | SHEET 5 OF 21 SHEETS | STA. 1221+50.00 TO STA. 1236+50.00

F.A.P. RTE.	SECTION	COUNTY	TOTAL SHEETS	SHEET NO.
342	(531) BR 23	COOK	1211	479
		CONTRACT NO. 62W38		
		ILLINOIS	FED. AID PROJECT	

MODEL: Default
FILE NAME: S:\ID\6300-6399\63461\3Drawings\CADMicro-SSA\CAD_Sheets\C3-01620491-sht-perm-eros-1-14_53-SAL.dgn

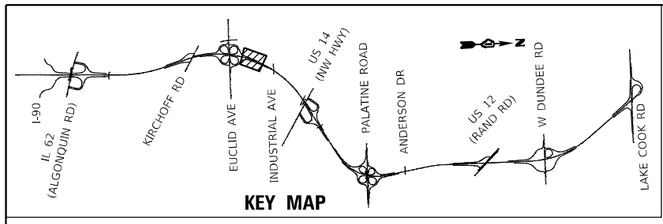

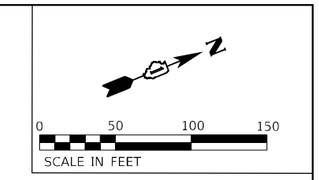

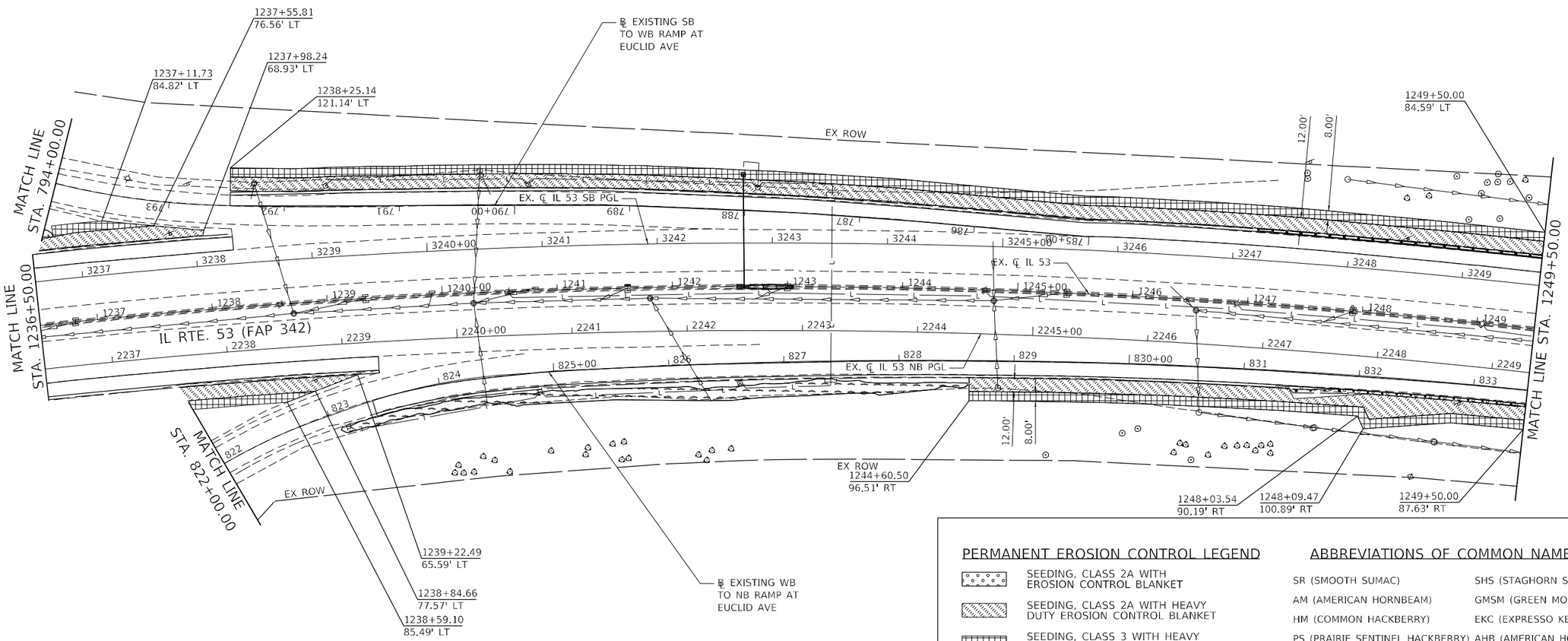

PERMANENT EROSION CONTROL LEGEND

- SEEDING, CLASS 2A WITH EROSION CONTROL BLANKET
- SEEDING, CLASS 2A WITH HEAVY DUTY EROSION CONTROL BLANKET
- SEEDING, CLASS 3 WITH HEAVY DUTY EROSION CONTROL BLANKET
- SEEDING, CLASS 4A (MODIFIED) WITH EROSION CONTROL BLANKET
- SEEDING, CLASS 4B/5B MIX WITH EROSION CONTROL BLANKET
- STONE RIPRAP, CLASS A3
- WETLANDS
- SURFACE WATERS
- PROPOSED TREE
- PROPOSED SHRUB

ABBREVIATIONS OF COMMON NAMES

SR (SMOOTH SUMAC)	SHS (STAGHORN SUMAC)
AM (AMERICAN HORNBEAM)	GMSM (GREEN MOUNTAIN SUGAR MAPLE)
HM (COMMON HACKBERRY)	EKC (EXPRESSO KENTUCKY COFFEETREE)
PS (PRAIRIE SENTINEL HACKBERRY)	AHB (AMERICAN HOPHORNBEAM)
KC (KENTUCKY COFFEETREE)	CSO (CRIMSON SPIRE OAK)
SWO (SWAMP WHITE OAK)	CSPL (CHINA SNOW PEKING LILAC)
CO (CHINKAPIN OAK)	MBCJ (MOUNTBATTEN CHINESE JUNIPER)
CBC (COMMON BALD CYPRESS)	BHS (BLACK HILLS SPRUCE)
AS (APPLE SERVICEBERRY)	SS (SERBIAN SPRUCE)
	BO (BUR OAK)

NOTES

1. ALL LANDSCAPED AREAS SHALL INCLUDE 6" OF NEW TOPSOIL UNLESS OTHERWISE NOTED. THIS WORK SHALL BE PAID FOR AS TOPSOIL FURNISH AND PLACE, 6"
2. FOR SLOPES STEEPER THAN 1:3, USE HEAVY DUTY EROSION CONTROL BLANKET.
3. SEE SHEET 495 FOR LANDSCAPING SCHEDULE

STRAND ASSOCIATES®
1170 SOUTH HOUBOLT ROAD
JOLIET, ILLINOIS 60431
(815) 744-4200

USER NAME = wyatts	DESIGNED - MAG	REVISED -	
	DRAWN - DJW	REVISED -	
PLOT SCALE = 100.0000 ' / in.	CHECKED - DWG	REVISED -	
PLOT DATE = 9/23/2024	DATE - 8/23/2024	REVISED -	

STATE OF ILLINOIS
DEPARTMENT OF TRANSPORTATION

IL ROUTE 53
PERMANENT EROSION CONTROL PLAN

SCALE: 1" = 50' | SHEET 6 OF 21 SHEETS | STA. 1236+50.00 TO STA. 1249+50.00

F.A.P. RTE.	SECTION	COUNTY	TOTAL SHEETS	SHEET NO.
342	(531) BR 23	COOK	1211	480
		CONTRACT NO. 62W38		
		ILLINOIS	FED. AID PROJECT	

MODEL: Default
FILE NAME: S:\JOB\6300-6399\6346\13\Drawings\CADMicro\SSA\CAD_Sheets\C3-01\62W13-sht-perm-eros-12453-SAL.dgn

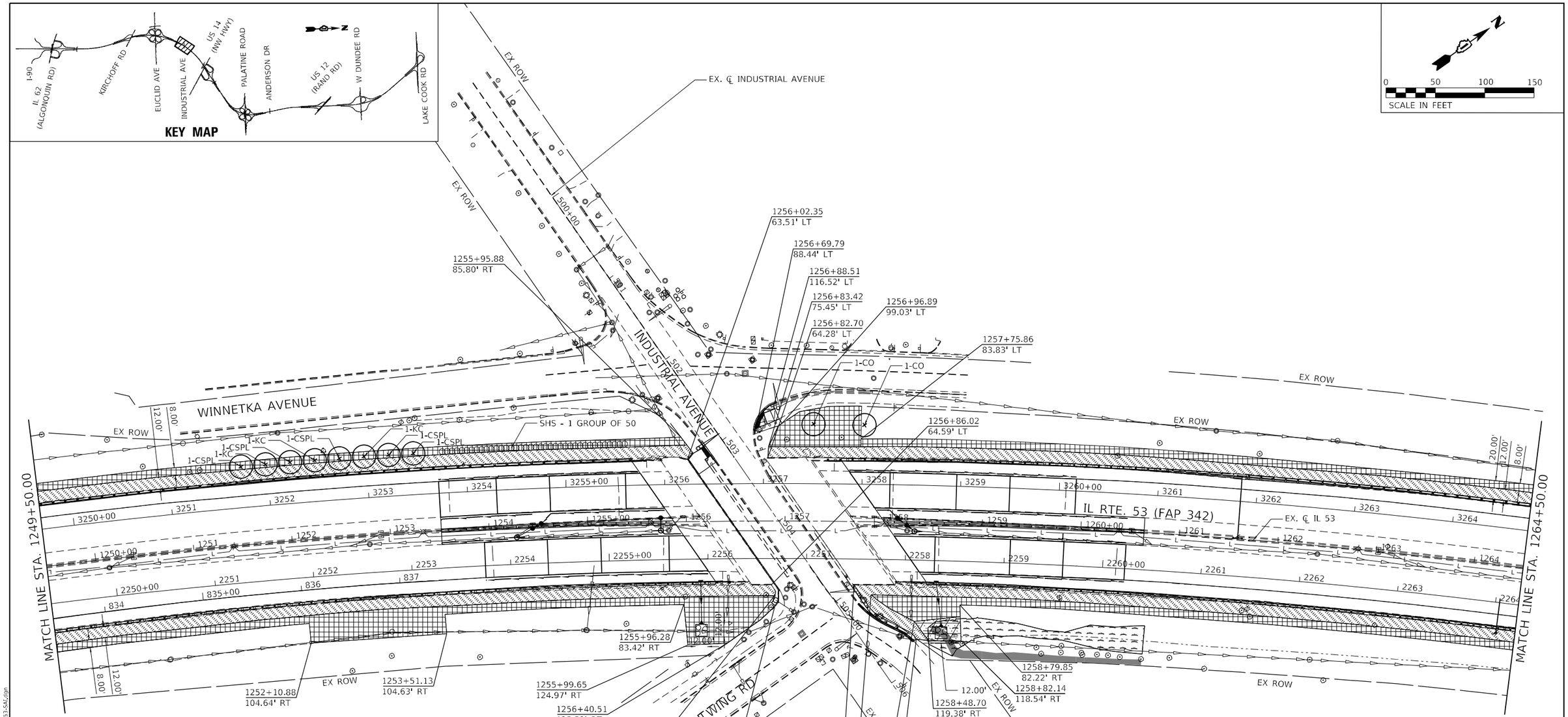

PERMANENT EROSION CONTROL LEGEND

- SEEDING, CLASS 2A WITH EROSION CONTROL BLANKET
- SEEDING, CLASS 2A WITH HEAVY DUTY EROSION CONTROL BLANKET
- SEEDING, CLASS 3 WITH HEAVY DUTY EROSION CONTROL BLANKET
- SEEDING, CLASS 4A (MODIFIED) WITH EROSION CONTROL BLANKET
- SEEDING, CLASS 4B/5B MIX WITH EROSION CONTROL BLANKET
- STONE RIPRAP, CLASS A3
- WETLANDS
- SURFACE WATERS
- PROPOSED TREE
- PROPOSED SHRUB

ABBREVIATIONS OF COMMON NAMES

SR (SMOOTH SUMAC)	SHS (STAGHORN SUMAC)
AM (AMERICAN HORNBEAM)	GMSM (GREEN MOUNTAIN SUGAR MAPLE)
HM (COMMON HACKBERRY)	EKC (EXPRESSO KENTUCKY COFFEETREE)
PS (PRAIRIE SENTINEL HACKBERRY)	AHB (AMERICAN HOPHORNBEAM)
KC (KENTUCKY COFFEETREE)	CSO (CRIMSON SPIRE OAK)
SWO (SWAMP WHITE OAK)	CSPL (CHINA SNOW PEKING LILAC)
CO (CHINKAPIN OAK)	MBCJ (MOUNTBATTEN CHINESE JUNIPER)
CBC (COMMON BALD CYPRESS)	BHS (BLACK HILLS SPRUCE)
AS (APPLE SERVICEBERRY)	SS (SERBIAN SPRUCE)
	BO (BUR OAK)

NOTES

1. ALL LANDSCAPED AREAS SHALL INCLUDE 6" OF NEW TOPSOIL UNLESS OTHERWISE NOTED. THIS WORK SHALL BE PAID FOR AS TOPSOIL FURNISH AND PLACE, 6"
2. FOR SLOPES STEEPER THAN 1:3, USE HEAVY DUTY EROSION CONTROL BLANKET.
3. SEE SHEET 495 FOR LANDSCAPING SCHEDULE

STRAND ASSOCIATES®
1170 SOUTH HOUBOLT ROAD
JOLIET, ILLINOIS 60431
(815) 744-4200

USER NAME = wyatts	DESIGNED - MAG	REVISED -	
	DRAWN - DJW	REVISED -	
PLOT SCALE = 100.0000 ' / in.	CHECKED - DWG	REVISED -	
PLOT DATE = 9/23/2024	DATE - 8/23/2024	REVISED -	

STATE OF ILLINOIS
DEPARTMENT OF TRANSPORTATION

IL ROUTE 53
PERMANENT EROSION CONTROL PLAN

SCALE: 1" = 50' | SHEET 7 OF 21 SHEETS | STA. 1249+50.00 TO STA. 1264+50.00

F.A.P. RTE.	SECTION	COUNTY	TOTAL SHEETS	SHEET NO.
342	(531) BR 23	COOK	1211	481
		CONTRACT NO. 62W38		
		ILLINOIS	FED. AID PROJECT	

MODEL: Default
FILE NAME: S:\JOB\6300-6399\6346\13D\Drawings\CADD\Micro-SS4\CAD_Sheets\C-3-0162N91-IR-perm-eros-13-R133-SAL.dgn

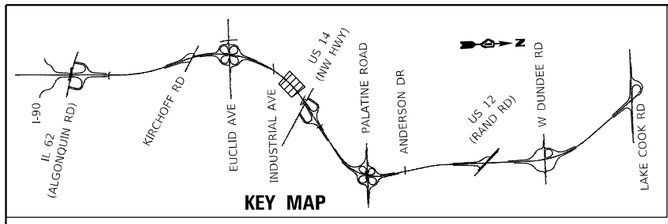

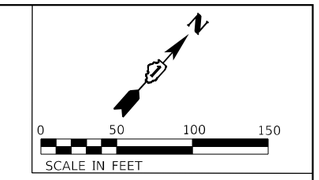

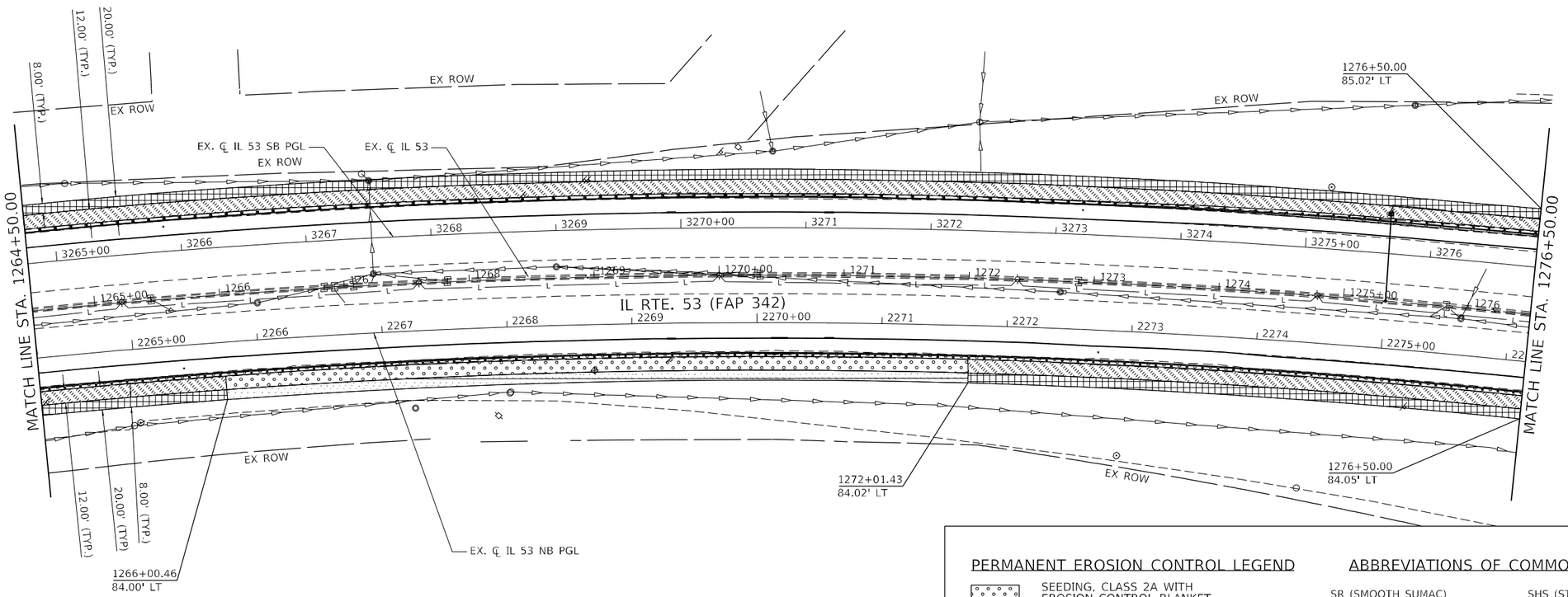

PERMANENT EROSION CONTROL LEGEND

- SEEDING, CLASS 2A WITH EROSION CONTROL BLANKET
- SEEDING, CLASS 2A WITH HEAVY DUTY EROSION CONTROL BLANKET
- SEEDING, CLASS 3 WITH HEAVY DUTY EROSION CONTROL BLANKET
- SEEDING, CLASS 4A (MODIFIED) WITH EROSION CONTROL BLANKET
- SEEDING, CLASS 4B/5B MIX WITH EROSION CONTROL BLANKET
- STONE RIPRAP, CLASS A3
- WETLANDS
- SURFACE WATERS
- PROPOSED TREE
- PROPOSED SHRUB

ABBREVIATIONS OF COMMON NAMES

SR (SMOOTH SUMAC)	SHS (STAGHORN SUMAC)
AM (AMERICAN HORNBEAM)	GMSM (GREEN MOUNTAIN SUGAR MAPLE)
HM (COMMON HACKBERRY)	EKC (EXPRESSO KENTUCKY COFFEETREE)
PS (PRAIRIE SENTINEL HACKBERRY)	AHB (AMERICAN HOPHORNBEAM)
KC (KENTUCKY COFFEETREE)	CSO (CRIMSON SPIRE OAK)
SWO (SWAMP WHITE OAK)	CSPL (CHINA SNOW PEKING LILAC)
CO (CHINKAPIN OAK)	MBCJ (MOUNTBATTEN CHINESE JUNIPER)
CBC (COMMON BALD CYPRESS)	BHS (BLACK HILLS SPRUCE)
AS (APPLE SERVICEBERRY)	SS (SERBIAN SPRUCE)
	BO (BUR OAK)

NOTES

1. ALL LANDSCAPED AREAS SHALL INCLUDE 6" OF NEW TOPSOIL UNLESS OTHERWISE NOTED. THIS WORK SHALL BE PAID FOR AS TOPSOIL FURNISH AND PLACE, 6"
2. FOR SLOPES STEEPER THAN 1:3, USE HEAVY DUTY EROSION CONTROL BLANKET.
3. SEE SHEET 495 FOR LANDSCAPING SCHEDULE

STRAND ASSOCIATES®
1170 SOUTH HOUBOLT ROAD
JOLIET, ILLINOIS 60431
(815) 744-4200

USER NAME = noaha	DESIGNED - MAG	REVISED -	
	DRAWN - DJW	REVISED -	
PLOT SCALE = 100.0000 ' / in.	CHECKED - DWG	REVISED -	
PLOT DATE = 8/22/2024	DATE - 8/23/2024	REVISED -	

STATE OF ILLINOIS
DEPARTMENT OF TRANSPORTATION

IL ROUTE 53
PERMANENT EROSION CONTROL PLAN

SCALE: 1" = 50' | SHEET 8 OF 21 SHEETS | STA. 1264+50.00 TO STA. 1276+50.00

F.A.P. RTE.	SECTION	COUNTY	TOTAL SHEETS	SHEET NO.
342	(531) BR 23	COOK	1211	482
		CONTRACT NO. 62W38		
		ILLINOIS	FED. AID PROJECT	

MODEL: Default
FILE NAME: S:\JOB\6300-6399\6346\13\Drawings\CADMicro\SSA\CAD_Sheets\C3-01\62W13-ilrt-perm-eros-1453-SAL.dgn

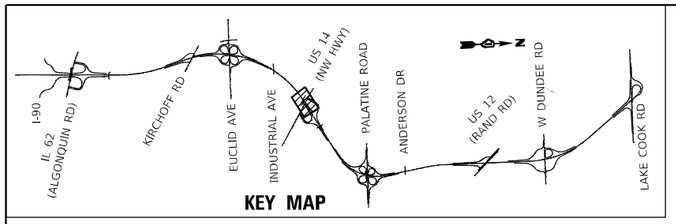

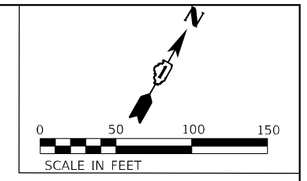

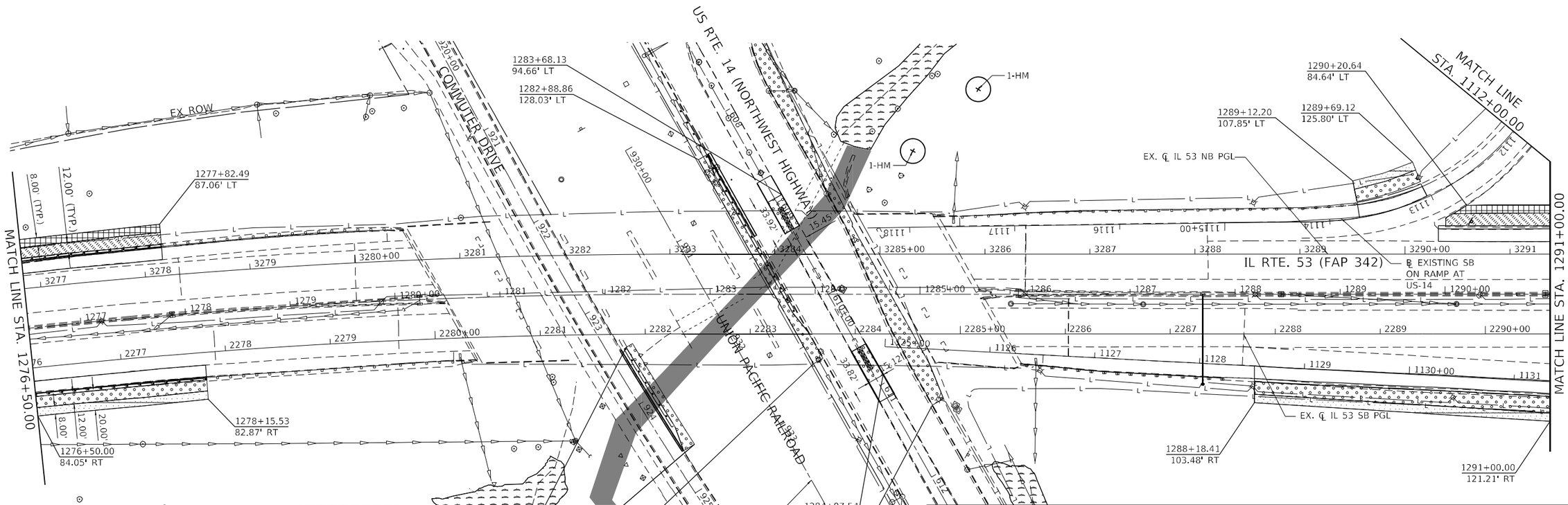

PERMANENT EROSION CONTROL LEGEND

- SEEDING, CLASS 2A WITH EROSION CONTROL BLANKET
- SEEDING, CLASS 2A WITH HEAVY DUTY EROSION CONTROL BLANKET
- SEEDING, CLASS 3 WITH HEAVY DUTY EROSION CONTROL BLANKET
- SEEDING, CLASS 4A (MODIFIED) WITH EROSION CONTROL BLANKET
- SEEDING, CLASS 4B/5B MIX WITH EROSION CONTROL BLANKET
- STONE RIPRAP, CLASS A3
- WETLANDS
- SURFACE WATERS
- PROPOSED TREE
- PROPOSED SHRUB

ABBREVIATIONS OF COMMON NAMES

SR (SMOOTH SUMAC)	GMSM (GREEN MOUNTAIN SUGAR MAPLE)
AM (AMERICAN HORNBEAM)	EKC (EXPRESSO KENTUCKY COFFEETREE)
HM (COMMON HACKBERRY)	AHB (AMERICAN HOPHORNBEAM)
PS (PRAIRIE SENTINEL HACKBERRY)	CSO (CRIMSON SPIRE OAK)
KC (KENTUCKY COFFEETREE)	CSPL (CHINA SNOW PEKING LILAC)
SWO (SWAMP WHITE OAK)	MBCJ (MOUNTBATTEN CHINESE JUNIPER)
CO (CHINKAPIN OAK)	BHS (BLACK HILLS SPRUCE)
CBC (COMMON BALD CYPRESS)	SS (SERBIAN SPRUCE)
SHS (STAGHORN SUMAC)	BO (BUR OAK)

NOTES

1. ALL LANDSCAPED AREAS SHALL INCLUDE 6" OF NEW TOPSOIL UNLESS OTHERWISE NOTED. THIS WORK SHALL BE PAID FOR AS TOPSOIL FURNISH AND PLACE, 6"
2. FOR SLOPES STEEPER THAN 1:3, USE HEAVY DUTY EROSION CONTROL BLANKET.
3. SEE SHEET 495 FOR LANDSCAPING SCHEDULE

STRAND ASSOCIATES®
1170 SOUTH HOUBOLT ROAD
JOLIET, ILLINOIS 60431
(815) 744-4200

USER NAME = vyatts	DESIGNED - MAG	REVISED -	
	DRAWN - DJW	REVISED -	
PLOT SCALE = 100.0000 ' / in.	CHECKED - DWG	REVISED -	
PLOT DATE = 9/23/2024	DATE - 8/23/2024	REVISED -	

STATE OF ILLINOIS
DEPARTMENT OF TRANSPORTATION

IL ROUTE 53
PERMANENT EROSION CONTROL PLAN

SCALE: 1" = 50' | SHEET 9 OF 21 SHEETS | STA. 1276+50.00 TO STA. 1291+00.00

F.A.P. RTE.	SECTION	COUNTY	TOTAL SHEETS	SHEET NO.
342	(531) BR 23	COOK	1211	483

CONTRACT NO. 62W38

ILLINOIS | FED. AID PROJECT

MODEL: Default
FILE NAME: S:\OL\6300-6399\63461\13Drawings\CADMicro-SSA\CAD_Sheets\C3B-D162N9-ldh-perm-eros-15-IL53-SA1.dgn

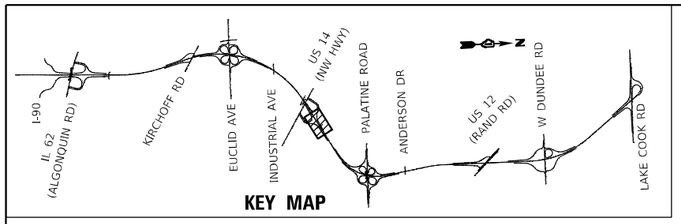

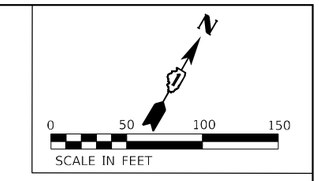

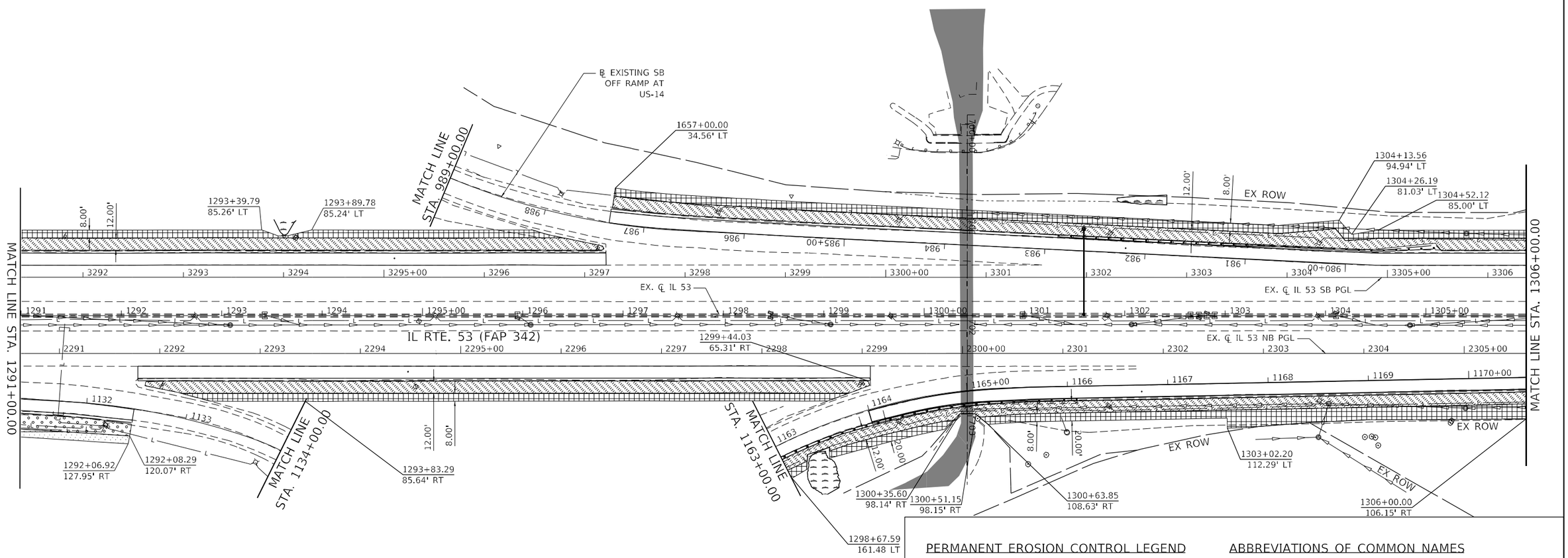

PERMANENT EROSION CONTROL LEGEND

- SEEDING, CLASS 2A WITH EROSION CONTROL BLANKET
- SEEDING, CLASS 2A WITH HEAVY DUTY EROSION CONTROL BLANKET
- SEEDING, CLASS 3 WITH HEAVY DUTY EROSION CONTROL BLANKET
- SEEDING, CLASS 4A (MODIFIED) WITH EROSION CONTROL BLANKET
- SEEDING, CLASS 4B/5B MIX WITH EROSION CONTROL BLANKET
- STONE RIPRAP, CLASS A3
- WETLANDS
- SURFACE WATERS
- PROPOSED TREE
- PROPOSED SHRUB

ABBREVIATIONS OF COMMON NAMES

SR (SMOOTH SUMAC)	SHS (STAGHORN SUMAC)
AM (AMERICAN HORNBEAM)	GMSM (GREEN MOUNTAIN SUGAR MAPLE)
HM (COMMON HACKBERRY)	EKC (EXPRESSO KENTUCKY COFFEETREE)
PS (PRAIRIE SENTINEL HACKBERRY)	AHB (AMERICAN HOPHORNBEAM)
KC (KENTUCKY COFFEETREE)	CSO (CRIMSON SPIRE OAK)
SWO (SWAMP WHITE OAK)	CSPL (CHINA SNOW PEKING LILAC)
CO (CHINKAPIN OAK)	MBCJ (MOUNTBATTEN CHINESE JUNIPER)
CBC (COMMON BALD CYPRESS)	BHS (BLACK HILLS SPRUCE)
AS (APPLE SERVICEBERRY)	SS (SERBIAN SPRUCE)
	BO (BUR OAK)

NOTES

1. ALL LANDSCAPED AREAS SHALL INCLUDE 6" OF NEW TOPSOIL UNLESS OTHERWISE NOTED. THIS WORK SHALL BE PAID FOR AS TOPSOIL FURNISH AND PLACE, 6"
2. FOR SLOPES STEEPER THAN 1:3, USE HEAVY DUTY EROSION CONTROL BLANKET.
3. SEE SHEET 495 FOR LANDSCAPING SCHEDULE

STRAND ASSOCIATES®
1170 SOUTH HOUBOLT ROAD
JOLIET, ILLINOIS 60431
(815) 744-4200

USER NAME = wyatts	DESIGNED - MAG	REVISED -	
	DRAWN - DJW	REVISED -	
PLOT SCALE = 100.0000 ' / in.	CHECKED - DWG	REVISED -	
PLOT DATE = 9/23/2024	DATE - 8/23/2024	REVISED -	

STATE OF ILLINOIS
DEPARTMENT OF TRANSPORTATION

IL ROUTE 53
PERMANENT EROSION CONTROL PLAN

SCALE: 1" = 50' | SHEET 10 OF 21 SHEETS | STA. 1291+00.00 TO STA. 1306+00.00

F.A.P. RTE.	SECTION	COUNTY	TOTAL SHEETS	SHEET NO.
342	(531) BR 23	COOK	1211	484

CONTRACT NO. 62W38

ILLINOIS | FED. AID PROJECT

MODEL: Default
FILE NAME: S:\JOB\6300-6399\6346\13\Drawings\CADMicro-SS4\CAD Sheets\C3-D162N91-IR-perm-eros-16-IL53-SAL.dgn

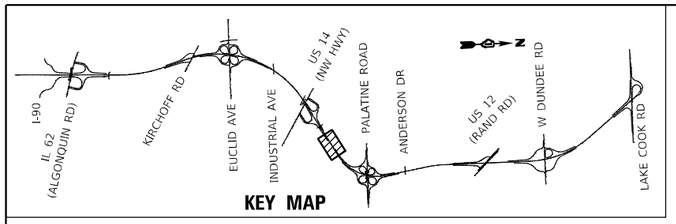

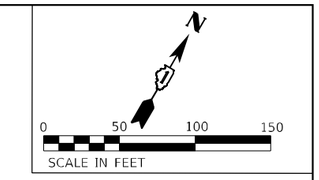

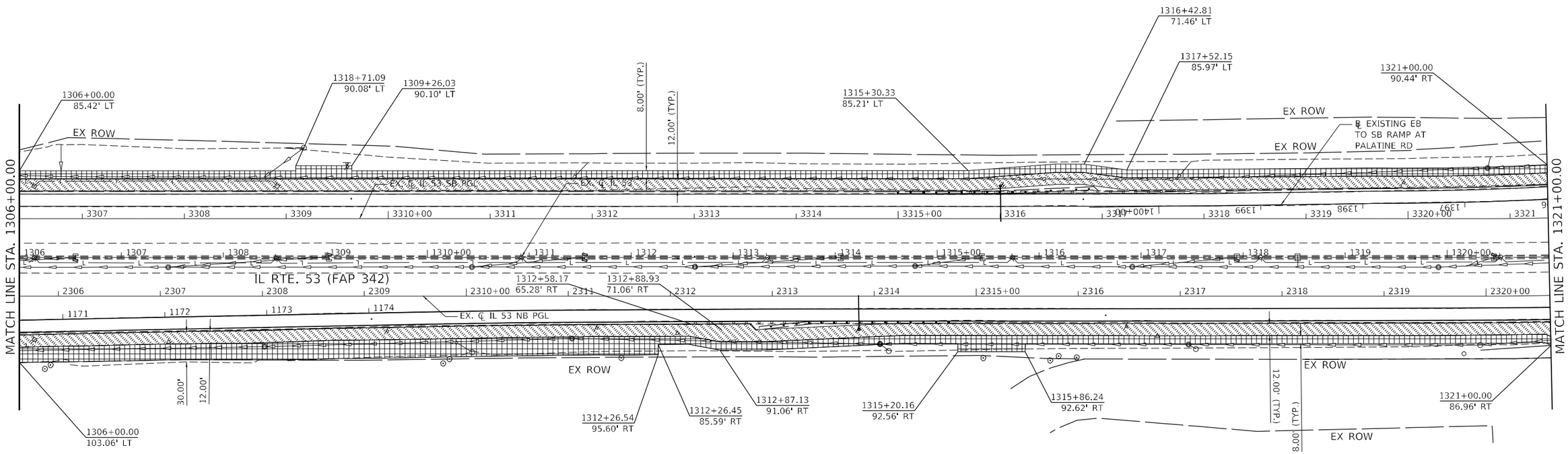

PERMANENT EROSION CONTROL LEGEND

- SEEDING, CLASS 2A WITH EROSION CONTROL BLANKET
- SEEDING, CLASS 2A WITH HEAVY DUTY EROSION CONTROL BLANKET
- SEEDING, CLASS 3 WITH HEAVY DUTY EROSION CONTROL BLANKET
- SEEDING, CLASS 4A (MODIFIED) WITH EROSION CONTROL BLANKET
- SEEDING, CLASS 4B/5B MIX WITH EROSION CONTROL BLANKET
- STONE RIPRAP, CLASS A3
- WETLANDS
- SURFACE WATERS
- PROPOSED TREE
- PROPOSED SHRUB

ABBREVIATIONS OF COMMON NAMES

SR (SMOOTH SUMAC)	SHS (STAGHORN SUMAC)
AM (AMERICAN HORNBEAM)	GMSM (GREEN MOUNTAIN SUGAR MAPLE)
HM (COMMON HACKBERRY)	EKC (EXPRESSO KENTUCKY COFFEETREE)
PS (PRAIRIE SENTINEL HACKBERRY)	AHB (AMERICAN HOPHORNBEAM)
KC (KENTUCKY COFFEETREE)	CSO (CRIMSON SPIRE OAK)
SWO (SWAMP WHITE OAK)	CSPL (CHINA SNOW PEKING LILAC)
CO (CHINKAPIN OAK)	MBCJ (MOUNTBATTEN CHINESE JUNIPER)
CBC (COMMON BALD CYPRESS)	BHS (BLACK HILLS SPRUCE)
AS (APPLE SERVICEBERRY)	SS (SERBIAN SPRUCE)
	BO (BUR OAK)

NOTES

1. ALL LANDSCAPED AREAS SHALL INCLUDE 6" OF NEW TOPSOIL UNLESS OTHERWISE NOTED. THIS WORK SHALL BE PAID FOR AS TOPSOIL FURNISH AND PLACE, 6"
2. FOR SLOPES STEEPER THAN 1:3, USE HEAVY DUTY EROSION CONTROL BLANKET.
3. SEE SHEET 495 FOR LANDSCAPING SCHEDULE

STRAND ASSOCIATES®
1170 SOUTH HOUBOLT ROAD
JOLIET, ILLINOIS 60431
(815) 744-4200

USER NAME = wyatts	DESIGNED - MAG	REVISED -	
	DRAWN - DJW	REVISED -	
PLOT SCALE = 100.0000 ' / in.	CHECKED - DWG	REVISED -	
PLOT DATE = 9/23/2024	DATE - 8/23/2024	REVISED -	

STATE OF ILLINOIS
DEPARTMENT OF TRANSPORTATION

IL ROUTE 53
PERMANENT EROSION CONTROL PLAN

SCALE: 1" = 50' | SHEET 11 OF 21 SHEETS | STA. 1306+00.00 TO STA. 1321+00.00

F.A.P. RTE.	SECTION	COUNTY	TOTAL SHEETS	SHEET NO.
342	(531) BR 23	COOK	1211	485
		CONTRACT NO. 62W38		
		ILLINOIS FED. AID PROJECT		

MODEL: Default
FILE NAME: S:\IO\6300-6399\6346\13\Drawings\CAD\Micro=SSA\CAD_Sheets\C3-D1\62N91-sht-perm-eros-17-53-SA.dgn

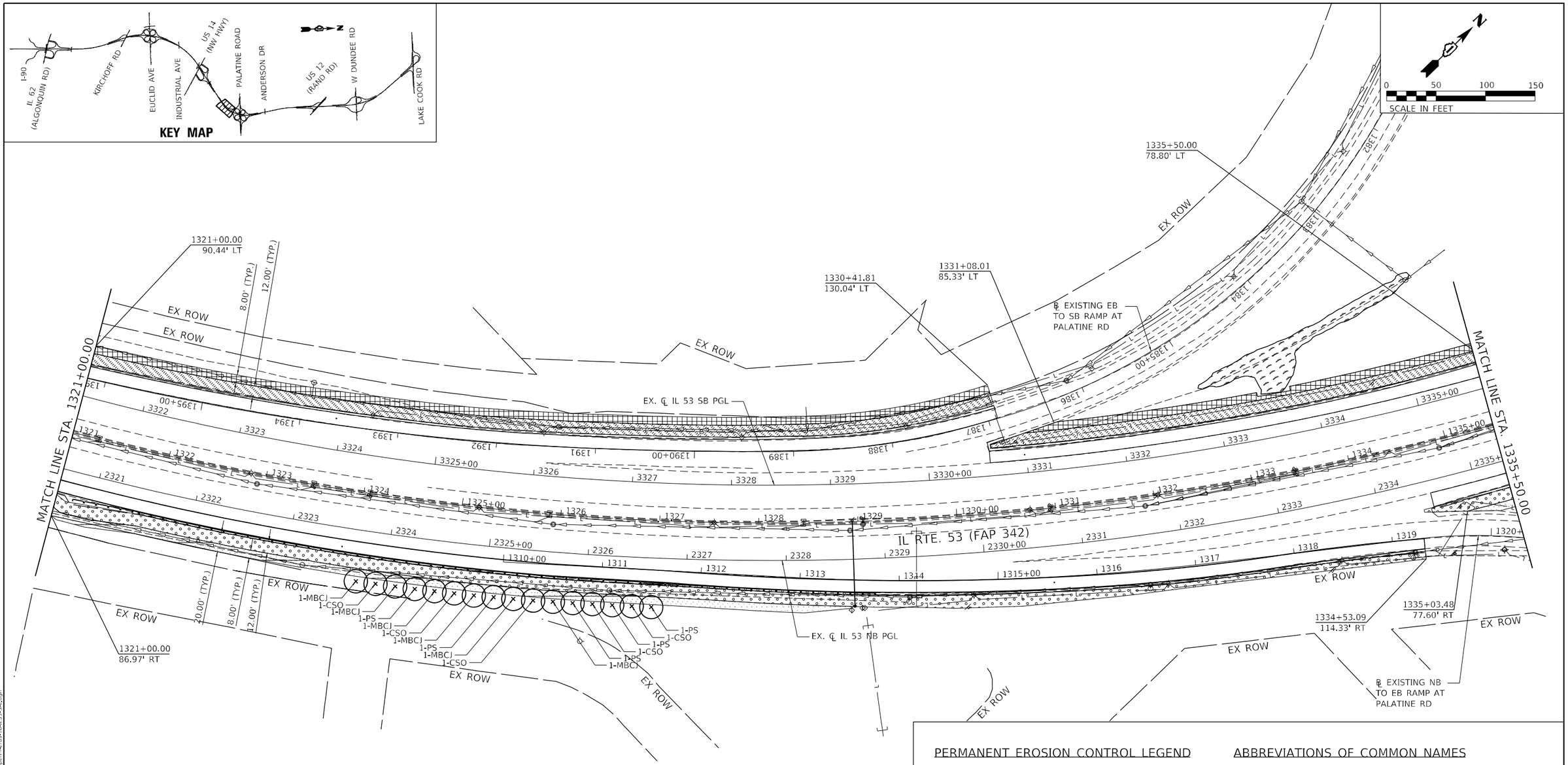

PERMANENT EROSION CONTROL LEGEND

- SEEDING, CLASS 2A WITH EROSION CONTROL BLANKET
- SEEDING, CLASS 2A WITH HEAVY DUTY EROSION CONTROL BLANKET
- SEEDING, CLASS 3 WITH HEAVY DUTY EROSION CONTROL BLANKET
- SEEDING, CLASS 4A (MODIFIED) WITH EROSION CONTROL BLANKET
- SEEDING, CLASS 4B/5B MIX WITH EROSION CONTROL BLANKET
- STONE RIPRAP, CLASS A3
- WETLANDS
- SURFACE WATERS
- PROPOSED TREE
- PROPOSED SHRUB

ABBREVIATIONS OF COMMON NAMES

SR (SMOOTH SUMAC)	SHS (STAGHORN SUMAC)
AM (AMERICAN HORNBEAM)	GMSM (GREEN MOUNTAIN SUGAR MAPLE)
HM (COMMON HACKBERRY)	EKC (EXPRESSO KENTUCKY COFFEETREE)
PS (PRAIRIE SENTINEL HACKBERRY)	AHB (AMERICAN HOPHORNBEAM)
KC (KENTUCKY COFFEETREE)	CSO (CRIMSON SPIRE OAK)
SWO (SWAMP WHITE OAK)	CSPL (CHINA SNOW PEKING LILAC)
CO (CHINKAPIN OAK)	MBCJ (MOUNTBATTEN CHINESE JUNIPER)
CBC (COMMON BALD CYPRESS)	BHS (BLACK HILLS SPRUCE)
AS (APPLE SERVICEBERRY)	SS (SERBIAN SPRUCE)
	BO (BUR OAK)

NOTES

1. ALL LANDSCAPED AREAS SHALL INCLUDE 6" OF NEW TOPSOIL UNLESS OTHERWISE NOTED. THIS WORK SHALL BE PAID FOR AS TOPSOIL FURNISH AND PLACE, 6"
2. FOR SLOPES STEEPER THAN 1:3, USE HEAVY DUTY EROSION CONTROL BLANKET.
3. SEE SHEET 495 FOR LANDSCAPING SCHEDULE

STRAND ASSOCIATES®
1170 SOUTH HOUBOLT ROAD
JOLIET, ILLINOIS 60431
(815) 744-4200

USER NAME = vyatts	DESIGNED - MAG	REVISED -	
	DRAWN - DJW	REVISED -	
PLOT SCALE = 100.0000 ' / in.	CHECKED - DWG	REVISED -	
PLOT DATE = 9/23/2024	DATE - 8/23/2024	REVISED -	

STATE OF ILLINOIS
DEPARTMENT OF TRANSPORTATION

IL ROUTE 53
PERMANENT EROSION CONTROL PLAN

SCALE: 1" = 50' | SHEET 12 OF 21 SHEETS | STA. 1321+00.00 TO STA. 1335+50.00

F.A.P. RTE.	SECTION	COUNTY	TOTAL SHEETS	SHEET NO.
342	(531) BR 23	COOK	1211	486

CONTRACT NO. 62W38

ILLINOIS | FED. AID PROJECT

MODEL: Default
FILE NAME: S:\OL\6300-6399\63461 13\Drawings\CADMicro-SSA\CAD_Sheets\C3-D162N91-sht-geom-4095-IL53-SA.dgn

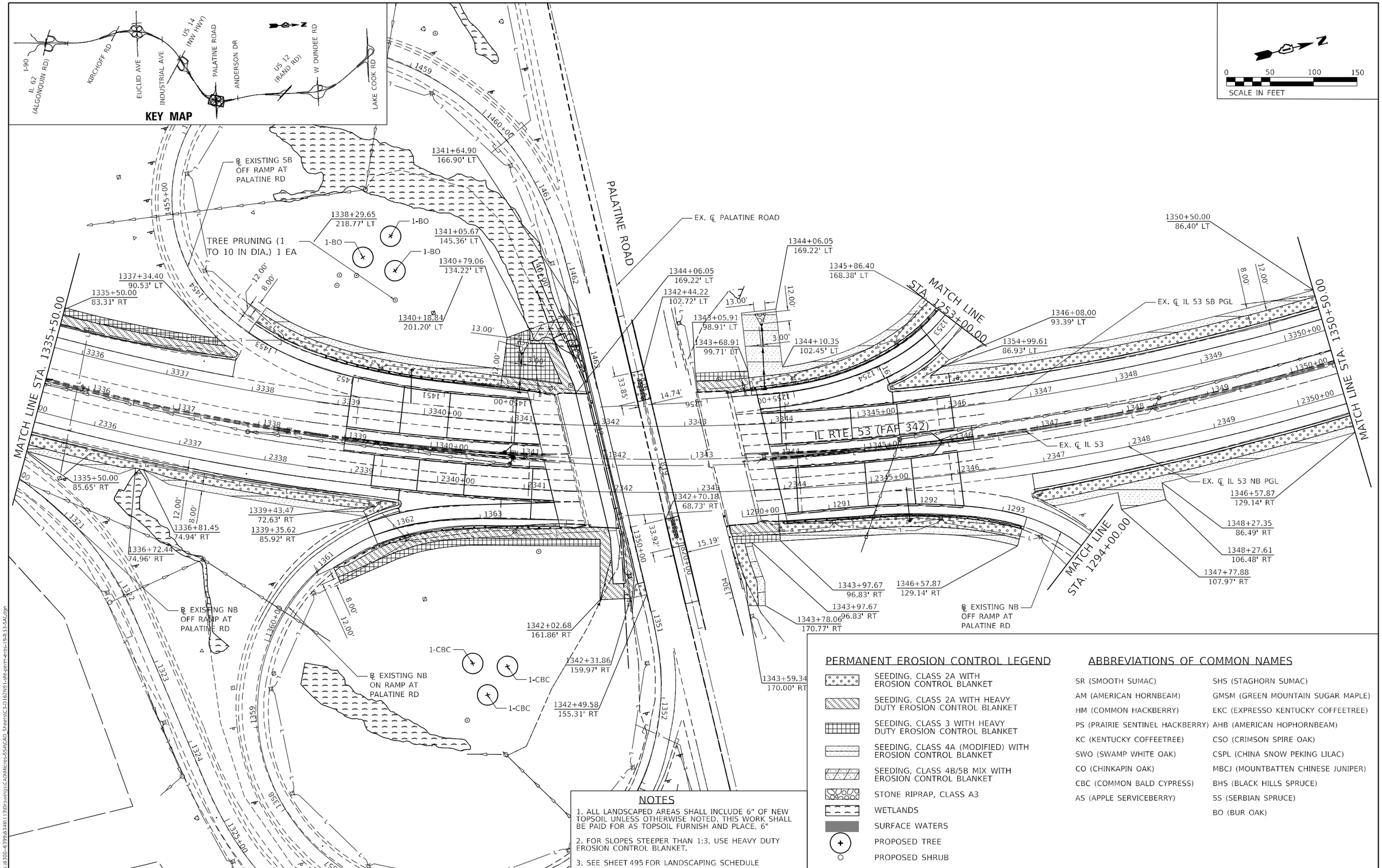

NOTES

1. ALL LANDSCAPED AREAS SHALL INCLUDE 6" OF NEW TOPSOIL UNLESS OTHERWISE NOTED. THIS WORK SHALL BE PAID FOR AS TOPSOIL FURNISH AND PLACE, 6"
2. FOR SLOPES STEEPER THAN 1:3, USE HEAVY DUTY EROSION CONTROL BLANKET.
3. SEE SHEET 495 FOR LANDSCAPING SCHEDULE

PERMANENT EROSION CONTROL LEGEND

- SEEDING, CLASS 2A WITH EROSION CONTROL BLANKET
- SEEDING, CLASS 2A WITH HEAVY DUTY EROSION CONTROL BLANKET
- SEEDING, CLASS 3 WITH HEAVY DUTY EROSION CONTROL BLANKET
- SEEDING, CLASS 4A (MODIFIED) WITH EROSION CONTROL BLANKET
- SEEDING, CLASS 4B/5B MIX WITH EROSION CONTROL BLANKET
- STONE RIPRAP, CLASS A3
- WETLANDS
- SURFACE WATERS
- PROPOSED TREE
- PROPOSED SHRUB

ABBREVIATIONS OF COMMON NAMES

SR (SMOOTH SUMAC)	SHS (STAGHORN SUMAC)
AM (AMERICAN HORNBEAM)	GMSM (GREEN MOUNTAIN SUGAR MAPLE)
HM (COMMON HACKBERRY)	EKC (EXPRESSO KENTUCKY COFFEETREE)
PS (PRAIRIE SENTINEL HACKBERRY)	AHB (AMERICAN HOPHORNBEAM)
KC (KENTUCKY COFFEETREE)	CSO (CRIMSON SPIRE OAK)
SWO (SWAMP WHITE OAK)	CSPL (CHINA SNOW PEKING LILAC)
CO (CHINKAPIN OAK)	MBCJ (MOUNTBATTEN CHINESE JUNIPER)
CBC (COMMON BALD CYPRESS)	BHS (BLACK HILLS SPRUCE)
AS (APPLE SERVICEBERRY)	SS (SERBIAN SPRUCE)
	BO (BUR OAK)

STRAND ASSOCIATES®
1170 SOUTH HOUBOLT ROAD
JOLIET, ILLINOIS 60431
(815) 744-4200

USER NAME = vyatts	DESIGNED - MAG	REVISED -
	DRAWN - DJW	REVISED -
PLOT SCALE = 100.0000 ' / in.	CHECKED - DWG	REVISED -
PLOT DATE = 9/23/2024	DATE - 8/23/2024	REVISED -

STATE OF ILLINOIS
DEPARTMENT OF TRANSPORTATION

IL ROUTE 53
PERMANENT EROSION CONTROL PLAN

SCALE: 1" = 50' | SHEET 13 OF 21 SHEETS | STA. 1335+50.00 TO STA. 1350+50.00

F.A.P. RTE.	SECTION	COUNTY	TOTAL SHEETS	SHEET NO.
342	(531) BR 23	COOK	1211	487
		CONTRACT NO. 62W38		
		ILLINOIS	FED. AID PROJECT	

MODEL: Default
FILE NAME: S:\DL\6300-6399\6346\13\Drawings\CADD\Micros-SS4\CAD_Sheets\C3-9162N91-sht-perm-eros-19-sht 33-SAL.dgn

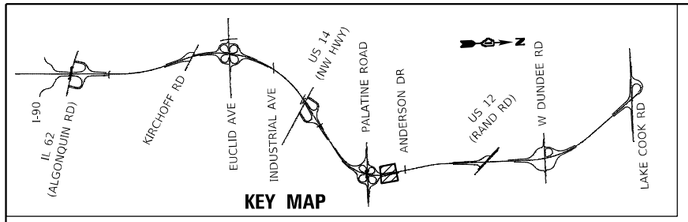

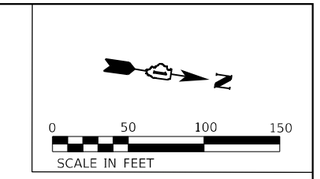

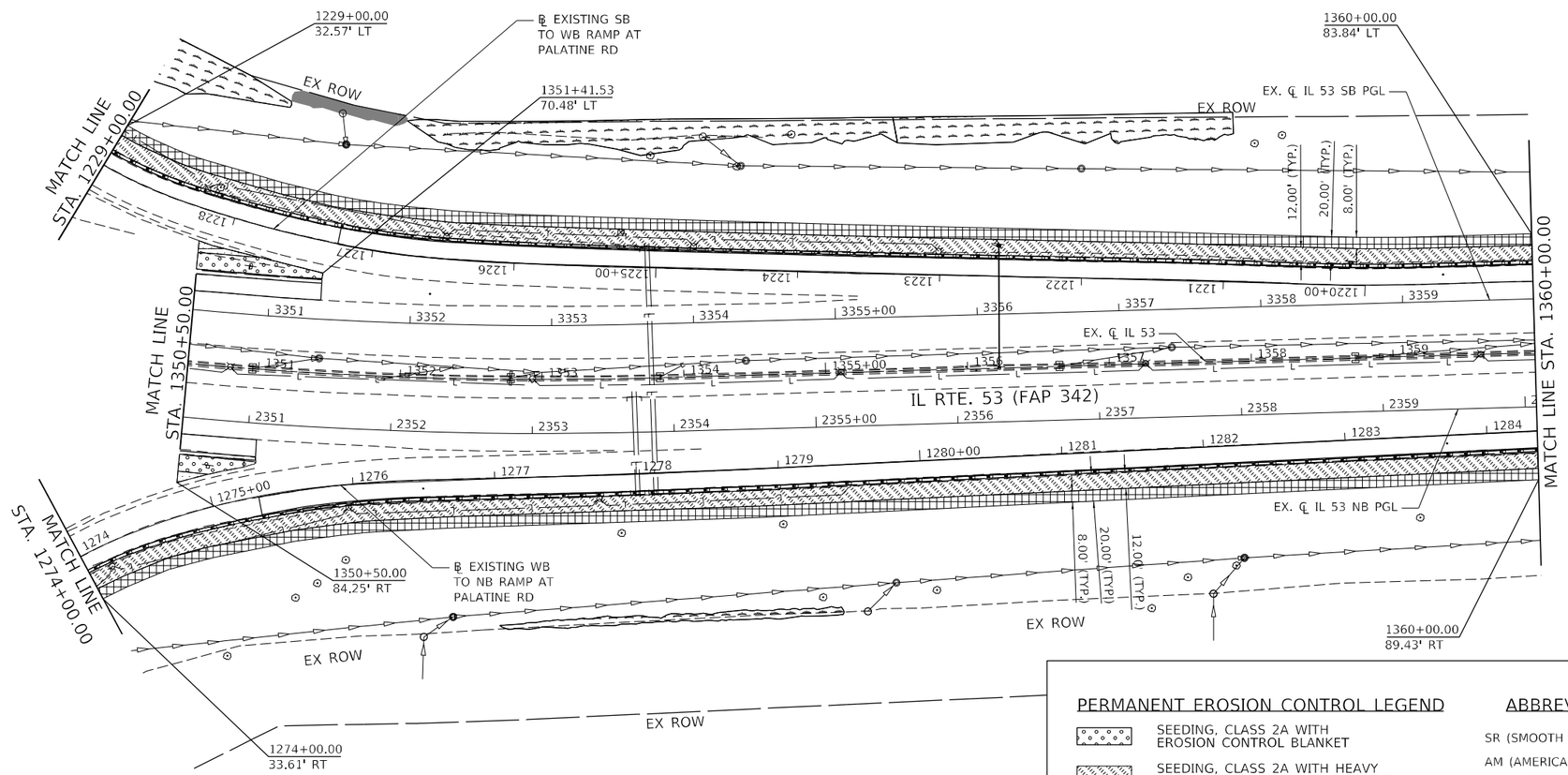

PERMANENT EROSION CONTROL LEGEND

- SEEDING, CLASS 2A WITH EROSION CONTROL BLANKET
- SEEDING, CLASS 2A WITH HEAVY DUTY EROSION CONTROL BLANKET
- SEEDING, CLASS 3 WITH HEAVY DUTY EROSION CONTROL BLANKET
- SEEDING, CLASS 4A (MODIFIED) WITH EROSION CONTROL BLANKET
- SEEDING, CLASS 4B/5B MIX WITH EROSION CONTROL BLANKET
- STONE RIPRAP, CLASS A3
- WETLANDS
- SURFACE WATERS
- PROPOSED TREE
- PROPOSED SHRUB

ABBREVIATIONS OF COMMON NAMES

SR (SMOOTH SUMAC)	SHS (STAGHORN SUMAC)
AM (AMERICAN HORNBEAM)	GMSM (GREEN MOUNTAIN SUGAR MAPLE)
HM (COMMON HACKBERRY)	EKC (EXPRESSO KENTUCKY COFFEETREE)
PS (PRAIRIE SENTINEL HACKBERRY)	AHB (AMERICAN HOPHORNBEAM)
KC (KENTUCKY COFFEETREE)	CSO (CRIMSON SPIRE OAK)
SWO (SWAMP WHITE OAK)	CSPL (CHINA SNOW PEKING LILAC)
CO (CHINKAPIN OAK)	MBCJ (MOUNTBATTEN CHINESE JUNIPER)
CBC (COMMON BALD CYPRESS)	BHS (BLACK HILLS SPRUCE)
AS (APPLE SERVICEBERRY)	SS (SERBIAN SPRUCE)
	BO (BUR OAK)

NOTES

1. ALL LANDSCAPED AREAS SHALL INCLUDE 6" OF NEW TOPSOIL UNLESS OTHERWISE NOTED. THIS WORK SHALL BE PAID FOR AS TOPSOIL FURNISH AND PLACE, 6"
2. FOR SLOPES STEEPER THAN 1:3, USE HEAVY DUTY EROSION CONTROL BLANKET.
3. SEE SHEET 495 FOR LANDSCAPING SCHEDULE

STRAND ASSOCIATES®
1170 SOUTH HOUBOLT ROAD
JOLIET, ILLINOIS 60431
(815) 744-4200

USER NAME = vryatts	DESIGNED - MAG	REVISED -
	DRAWN - DJW	REVISED -
PLOT SCALE = 100.0000 ' / in.	CHECKED - DWG	REVISED -
PLOT DATE = 9/23/2024	DATE - 8/23/2024	REVISED -

STATE OF ILLINOIS
DEPARTMENT OF TRANSPORTATION

IL ROUTE 53
PERMANENT EROSION CONTROL PLAN

SCALE: 1" = 50' | SHEET 14 OF 21 SHEETS | STA. 1350+50.00 TO STA. 1360+00.00

F.A.P. RTE.	SECTION	COUNTY	TOTAL SHEETS	SHEET NO.
342	(531) BR 23	COOK	1211	488
		CONTRACT NO. 62W38		
		ILLINOIS	FED. AID PROJECT	

MODEL: Default
FILE NAME: S:\JOL\6300-6399\63461\13\Drawings\CADD\Microstation\CAD Sheets\C3-D162N91-IR-perm-eros-20-IL53-SAL.dgn

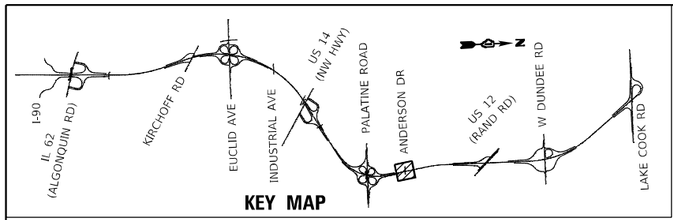

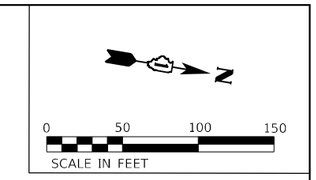

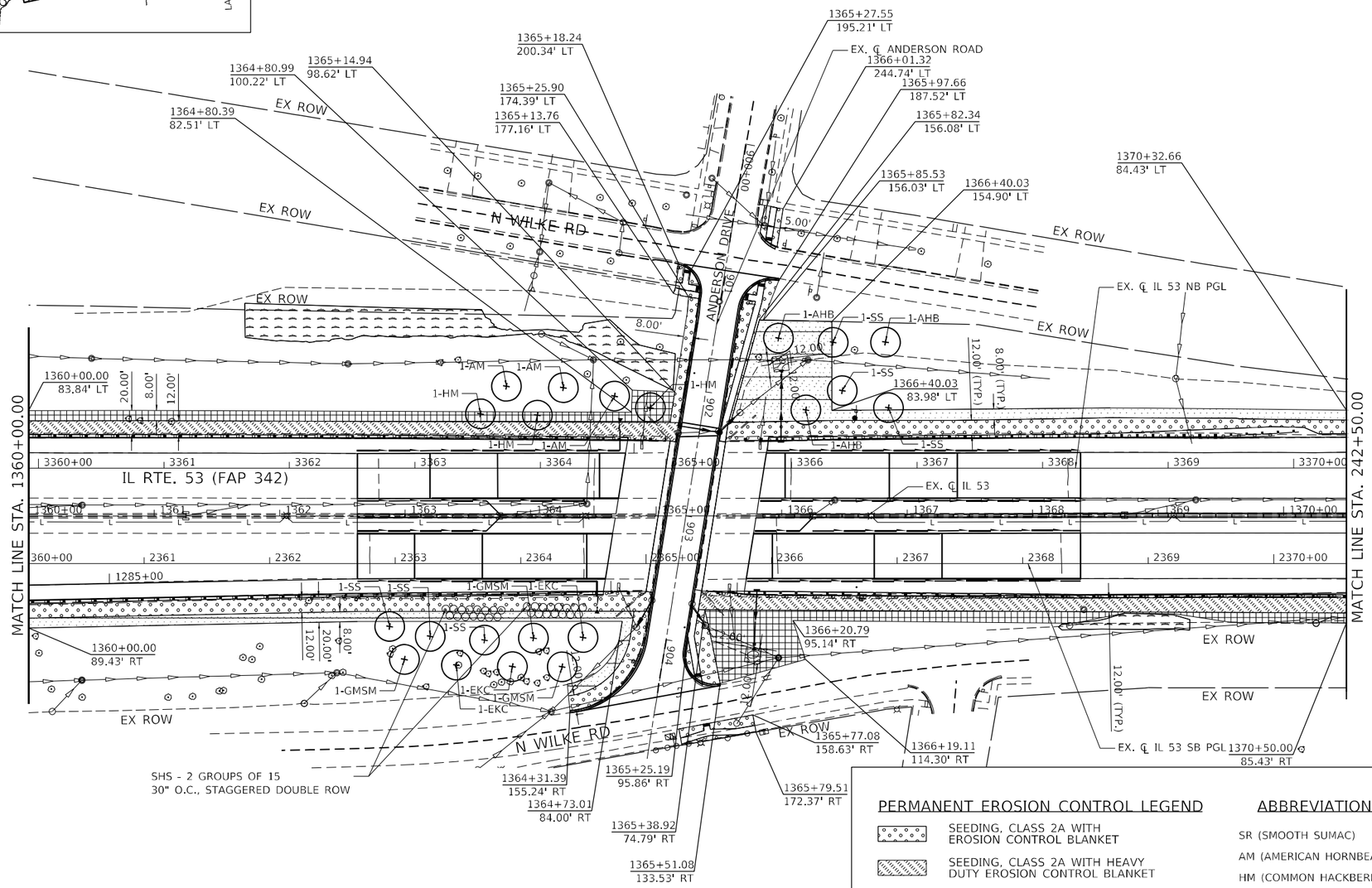

NOTES

1. ALL LANDSCAPED AREAS SHALL INCLUDE 6" OF NEW TOPSOIL UNLESS OTHERWISE NOTED. THIS WORK SHALL BE PAID FOR AS TOPSOIL FURNISH AND PLACE, 6"
2. FOR SLOPES STEEPER THAN 1:3, USE HEAVY DUTY EROSION CONTROL BLANKET.
3. SEE SHEET 495 FOR LANDSCAPING SCHEDULE

PERMANENT EROSION CONTROL LEGEND

- SEEDING, CLASS 2A WITH EROSION CONTROL BLANKET
- SEEDING, CLASS 2A WITH HEAVY DUTY EROSION CONTROL BLANKET
- SEEDING, CLASS 3 WITH HEAVY DUTY EROSION CONTROL BLANKET
- SEEDING, CLASS 4A (MODIFIED) WITH EROSION CONTROL BLANKET
- SEEDING, CLASS 4B/5B MIX WITH EROSION CONTROL BLANKET
- STONE RIPRAP, CLASS A3
- WETLANDS
- SURFACE WATERS
- PROPOSED TREE
- PROPOSED SHRUB

ABBREVIATIONS OF COMMON NAMES

SR (SMOOTH SUMAC)	SHS (STAGHORN SUMAC)
AM (AMERICAN HORNBEAM)	GMSM (GREEN MOUNTAIN SUGAR MAPLE)
HM (COMMON HACKBERRY)	EKC (EXPRESSO KENTUCKY COFFEETREE)
PS (PRAIRIE SENTINEL HACKBERRY)	AHB (AMERICAN HOPHORNBEAM)
KC (KENTUCKY COFFEETREE)	CSO (CRIMSON SPIRE OAK)
SWO (SWAMP WHITE OAK)	CSPL (CHINA SNOW PEKING LILAC)
CO (CHINKAPIN OAK)	MBCJ (MOUNTBATTEN CHINESE JUNIPER)
CBC (COMMON BALD CYPRESS)	BHS (BLACK HILLS SPRUCE)
AS (APPLE SERVICEBERRY)	SS (SERBIAN SPRUCE)
	BO (BUR OAK)

MODEL: Default
FILE NAME: S:\JOB\6300-6399\6346\113\Drawings\CAD\Micros-SSA\CAD Sheets\C3-D162N01-ilh-perm-eros-21-IL53-SAL.dgn

STRAND ASSOCIATES
1170 SOUTH HOUBOLT ROAD
JOLIET, ILLINOIS 60431
(815) 744-4200

USER NAME = vyatts	DESIGNED - MAG	REVISED -	
	DRAWN - DJW	REVISED -	
PLOT SCALE = 100.0000 ' / in.	CHECKED - DWG	REVISED -	
PLOT DATE = 9/23/2024	DATE - 8/23/2024	REVISED -	

STATE OF ILLINOIS
DEPARTMENT OF TRANSPORTATION

IL ROUTE 53
PERMANENT EROSION CONTROL PLAN

SCALE: 1" = 50' | SHEET 15 OF 21 SHEETS | STA. 1360+00.00 TO STA. 1370+00.00

F.A.P. RTE.	SECTION	COUNTY	TOTAL SHEETS	SHEET NO.
342	(531) BR 23	COOK	1211	489

CONTRACT NO. 62W38

ILLINOIS | FED. AID PROJECT

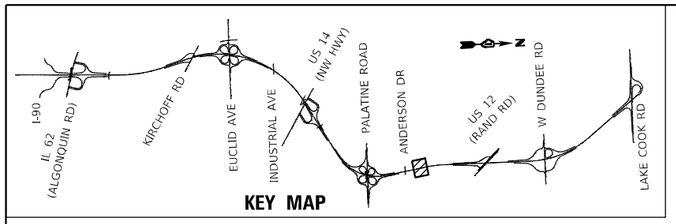

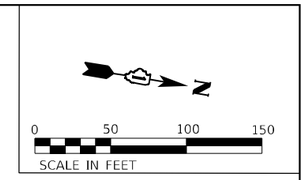

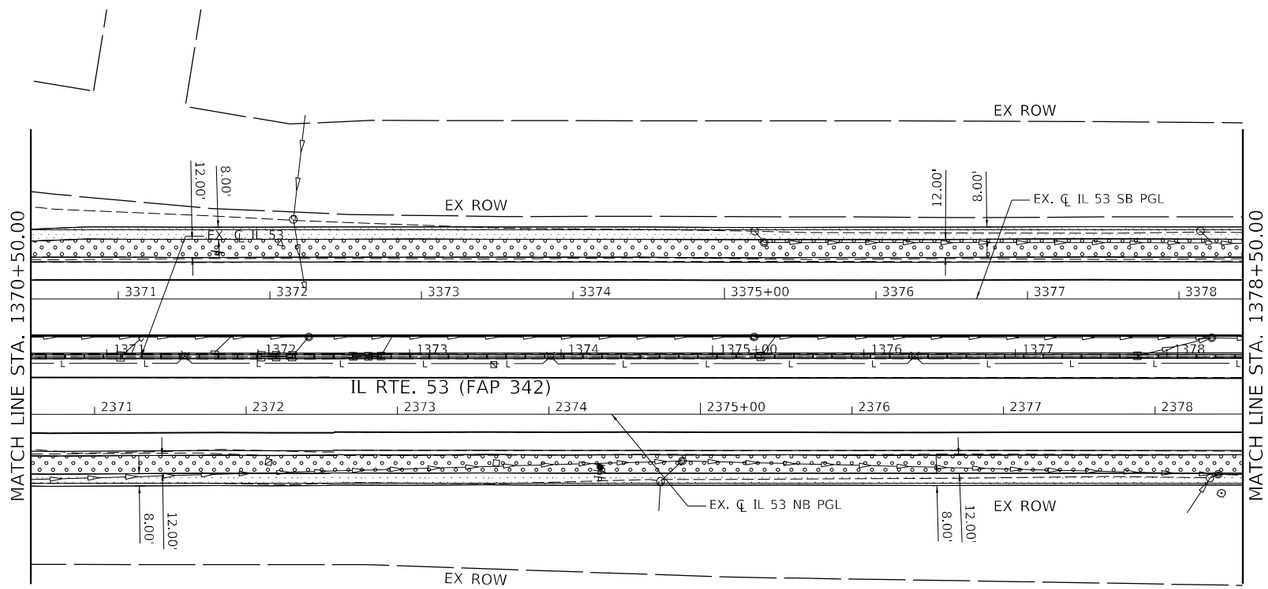

NOTES

1. ALL LANDSCAPED AREAS SHALL INCLUDE 6" OF NEW TOPSOIL UNLESS OTHERWISE NOTED. THIS WORK SHALL BE PAID FOR AS TOPSOIL FURNISH AND PLACE, 6"
2. FOR SLOPES STEEPER THAN 1:3, USE HEAVY DUTY EROSION CONTROL BLANKET.
3. SEE SHEET 495 FOR LANDSCAPING SCHEDULE

PERMANENT EROSION CONTROL LEGEND

- SEEDING, CLASS 2A WITH EROSION CONTROL BLANKET
- SEEDING, CLASS 2A WITH HEAVY DUTY EROSION CONTROL BLANKET
- SEEDING, CLASS 3 WITH HEAVY DUTY EROSION CONTROL BLANKET
- SEEDING, CLASS 4A (MODIFIED) WITH EROSION CONTROL BLANKET
- SEEDING, CLASS 4B/5B MIX WITH EROSION CONTROL BLANKET
- STONE RIPRAP, CLASS A3
- WETLANDS
- SURFACE WATERS
- PROPOSED TREE
- PROPOSED SHRUB

ABBREVIATIONS OF COMMON NAMES

SR (SMOOTH SUMAC)	SHS (STAGHORN SUMAC)
AM (AMERICAN HORNBEAM)	GMSM (GREEN MOUNTAIN SUGAR MAPLE)
HM (COMMON HACKBERRY)	EKC (EXPRESSO KENTUCKY COFFEETREE)
PS (PRAIRIE SENTINEL HACKBERRY)	AHB (AMERICAN HOPHORNBEAM)
KC (KENTUCKY COFFEETREE)	CSO (CRIMSON SPIRE OAK)
SWO (SWAMP WHITE OAK)	CSPL (CHINA SNOW PEKING LILAC)
CO (CHINKAPIN OAK)	MBCJ (MOUNTBATTEN CHINESE JUNIPER)
CBC (COMMON BALD CYPRESS)	BHS (BLACK HILLS SPRUCE)
AS (APPLE SERVICEBERRY)	SS (SERBIAN SPRUCE)
	BO (BUR OAK)

STRAND ASSOCIATES
1170 SOUTH HOUBOLT ROAD
JOLIET, ILLINOIS 60431
(815) 744-4200

USER NAME = noaha	DESIGNED - MAG	REVISED -	
	DRAWN - DJW	REVISED -	
PLOT SCALE = 100.0000 ' / in.	CHECKED - DWG	REVISED -	
PLOT DATE = 8/22/2024	DATE - 8/23/2024	REVISED -	

STATE OF ILLINOIS
DEPARTMENT OF TRANSPORTATION

IL ROUTE 53
PERMANENT EROSION CONTROL PLAN

SCALE: 1" = 50' | SHEET 16 OF 21 SHEETS | STA. 1370+50.00 TO STA. 1378+50.00

F.A.P. RTE.	SECTION	COUNTY	TOTAL SHEETS	SHEET NO.
342	(531) BR 23	COOK	1211	490
		CONTRACT NO. 62W38		
		ILLINOIS	FED. AID PROJECT	

MODEL: Default
FILE NAME: S:\IDOT\6300-639\06346\13\Drawings\CAD\Micro-SS\ACAD_Sheets\C3-01\67491-sht-perm-ero-22-53-SA.dgn

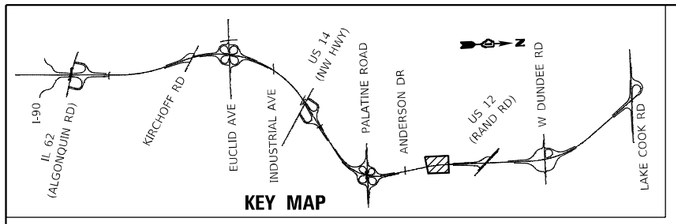

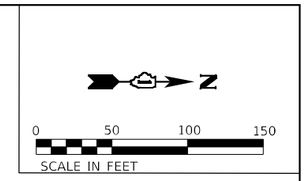

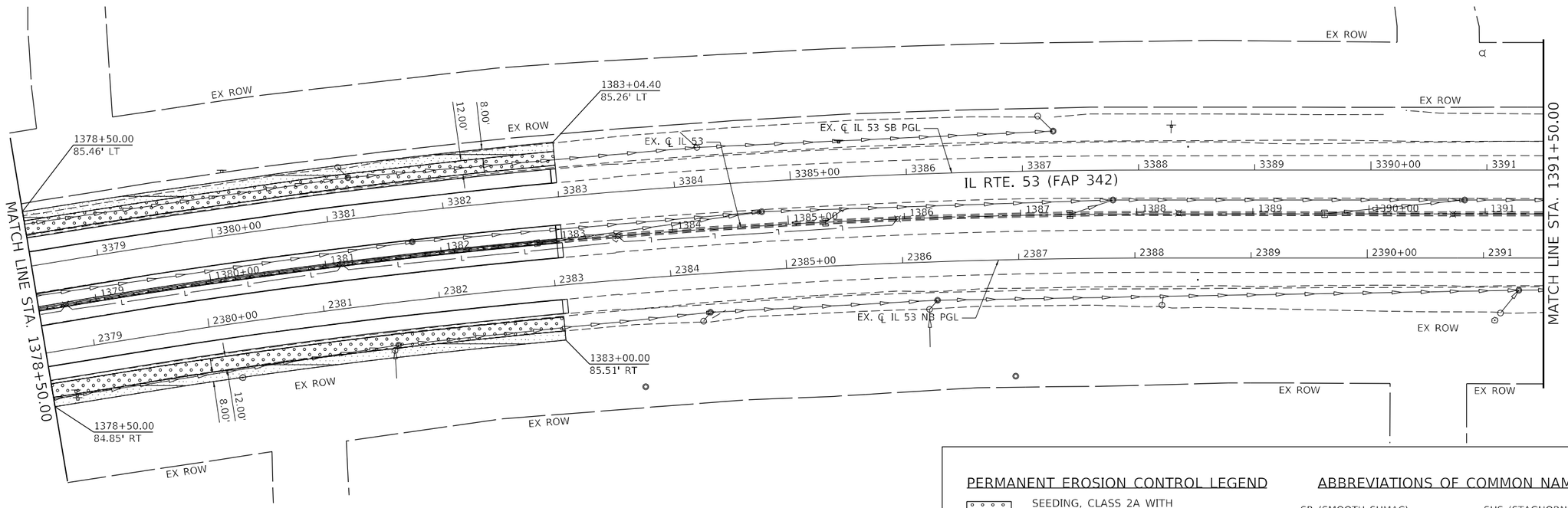

PERMANENT EROSION CONTROL LEGEND

- SEEDING, CLASS 2A WITH EROSION CONTROL BLANKET
- SEEDING, CLASS 2A WITH HEAVY DUTY EROSION CONTROL BLANKET
- SEEDING, CLASS 3 WITH HEAVY DUTY EROSION CONTROL BLANKET
- SEEDING, CLASS 4A (MODIFIED) WITH EROSION CONTROL BLANKET
- SEEDING, CLASS 4B/5B MIX WITH EROSION CONTROL BLANKET
- STONE RIPRAP, CLASS A3
- WETLANDS
- SURFACE WATERS
- PROPOSED TREE
- PROPOSED SHRUB

ABBREVIATIONS OF COMMON NAMES

SR (SMOOTH SUMAC)	SHS (STAGHORN SUMAC)
AM (AMERICAN HORNBEAM)	GMSM (GREEN MOUNTAIN SUGAR MAPLE)
HM (COMMON HACKBERRY)	EKC (EXPRESSO KENTUCKY COFFEETREE)
PS (PRAIRIE SENTINEL HACKBERRY)	AHB (AMERICAN HOPHORNBEAM)
KC (KENTUCKY COFFEETREE)	CSO (CRIMSON SPIRE OAK)
SWO (SWAMP WHITE OAK)	CSPL (CHINA SNOW PEKING LILAC)
CO (CHINKAPIN OAK)	MBCJ (MOUNTBATTEN CHINESE JUNIPER)
CBC (COMMON BALD CYPRESS)	BHS (BLACK HILLS SPRUCE)
AS (APPLE SERVICEBERRY)	SS (SERBIAN SPRUCE)
	BO (BUR OAK)

NOTES

1. ALL LANDSCAPED AREAS SHALL INCLUDE 6" OF NEW TOPSOIL UNLESS OTHERWISE NOTED. THIS WORK SHALL BE PAID FOR AS TOPSOIL FURNISH AND PLACE, 6"
2. FOR SLOPES STEEPER THAN 1:3, USE HEAVY DUTY EROSION CONTROL BLANKET.
3. SEE SHEET 495 FOR LANDSCAPING SCHEDULE

STRAND ASSOCIATES®
1170 SOUTH HOUBOLT ROAD
JOLIET, ILLINOIS 60431
(815) 744-4200

USER NAME = noaha	DESIGNED - MAG	REVISED -
	DRAWN - DJW	REVISED -
PLOT SCALE = 100.0000 ' / in.	CHECKED - DWG	REVISED -
PLOT DATE = 8/22/2024	DATE - 8/23/2024	REVISED -

STATE OF ILLINOIS
DEPARTMENT OF TRANSPORTATION

IL ROUTE 53
PERMANENT EROSION CONTROL PLAN

SCALE: 1" = 50' | SHEET 17 OF 21 SHEETS | STA. 1378+50.00 TO STA. 1391+50.00

F.A.P. RTE.	SECTION	COUNTY	TOTAL SHEETS	SHEET NO.
342	(531) BR 23	COOK	1211	491
		CONTRACT NO. 62W38		
		ILLINOIS	FED. AID PROJECT	

MODEL: Default
FILE NAME: S:\JOL\6300-6399\63461\13\Drawings\CADD\Microstation\CAD Sheets\C3-01620N91-IH-perm-eros-23-IL53-SAL.dgn

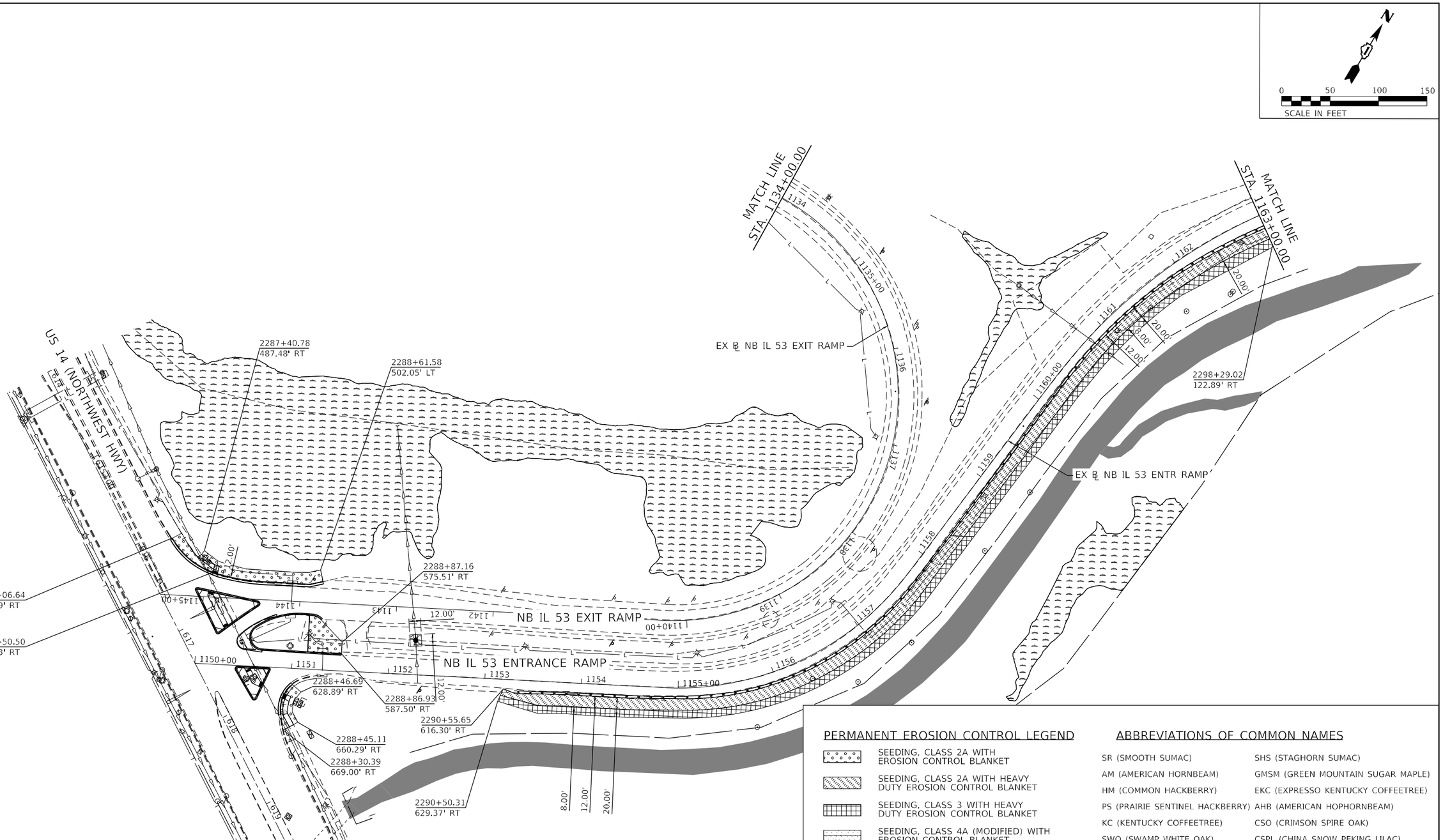

PERMANENT EROSION CONTROL LEGEND

- SEEDING, CLASS 2A WITH EROSION CONTROL BLANKET
- SEEDING, CLASS 2A WITH HEAVY DUTY EROSION CONTROL BLANKET
- SEEDING, CLASS 3 WITH HEAVY DUTY EROSION CONTROL BLANKET
- SEEDING, CLASS 4A (MODIFIED) WITH EROSION CONTROL BLANKET
- SEEDING, CLASS 4B/5B MIX WITH EROSION CONTROL BLANKET
- STONE RIPRAP, CLASS A3
- WETLANDS
- SURFACE WATERS
- PROPOSED TREE
- PROPOSED SHRUB

ABBREVIATIONS OF COMMON NAMES

SR (SMOOTH SUMAC)	SHS (STAGHORN SUMAC)
AM (AMERICAN HORNBEAM)	GMSM (GREEN MOUNTAIN SUGAR MAPLE)
HM (COMMON HACKBERRY)	EKC (EXPRESSO KENTUCKY COFFEETREE)
PS (PRAIRIE SENTINEL HACKBERRY)	AHB (AMERICAN HOPHORNBEAM)
KC (KENTUCKY COFFEETREE)	CSO (CRIMSON SPIRE OAK)
SWO (SWAMP WHITE OAK)	CSPL (CHINA SNOW PEKING LILAC)
CO (CHINKAPIN OAK)	MBCJ (MOUNTBATTEN CHINESE JUNIPER)
CBC (COMMON BALD CYPRESS)	BHS (BLACK HILLS SPRUCE)
AS (APPLE SERVICEBERRY)	SS (SERBIAN SPRUCE)
	BO (BUR OAK)

NOTES

1. ALL LANDSCAPED AREAS SHALL INCLUDE 6" OF NEW TOPSOIL UNLESS OTHERWISE NOTED. THIS WORK SHALL BE PAID FOR AS TOPSOIL FURNISH AND PLACE, 6"
2. FOR SLOPES STEEPER THAN 1:3, USE HEAVY DUTY EROSION CONTROL BLANKET.
3. SEE SHEET 495 FOR LANDSCAPING SCHEDULE

STRAND ASSOCIATES
1170 SOUTH HOUBOLT ROAD
JOLIET, ILLINOIS 60431
(815) 744-4200

USER NAME = wyatts	DESIGNED - MAG	REVISED -	
	DRAWN - DJW	REVISED -	
PLOT SCALE = 100.0000 ' / in.	CHECKED - DWG	REVISED -	
PLOT DATE = 9/23/2024	DATE - 8/23/2024	REVISED -	

STATE OF ILLINOIS
DEPARTMENT OF TRANSPORTATION

US 14 - NE RAMP
PERMANENT EROSION CONTROL PLAN

SCALE: 1" = 50' | SHEET 18 OF 21 SHEETS | STA. 1150+00.00 TO STA. 1163+00.00

F.A.P. RTE.	SECTION	COUNTY	TOTAL SHEETS	SHEET NO.
342	(531) BR 23	COOK	1211	492
		CONTRACT NO. 62W38		
		ILLINOIS	FED. AID PROJECT	

MODEL: Default
FILE NAME: S:\JOB\6300-6399\6346113\Drawings\CAD\Micro-SS4\CAD_Sheets\C3-D167N91-dtl-perm-eros-24-IL53-SA-Ramp.dgn

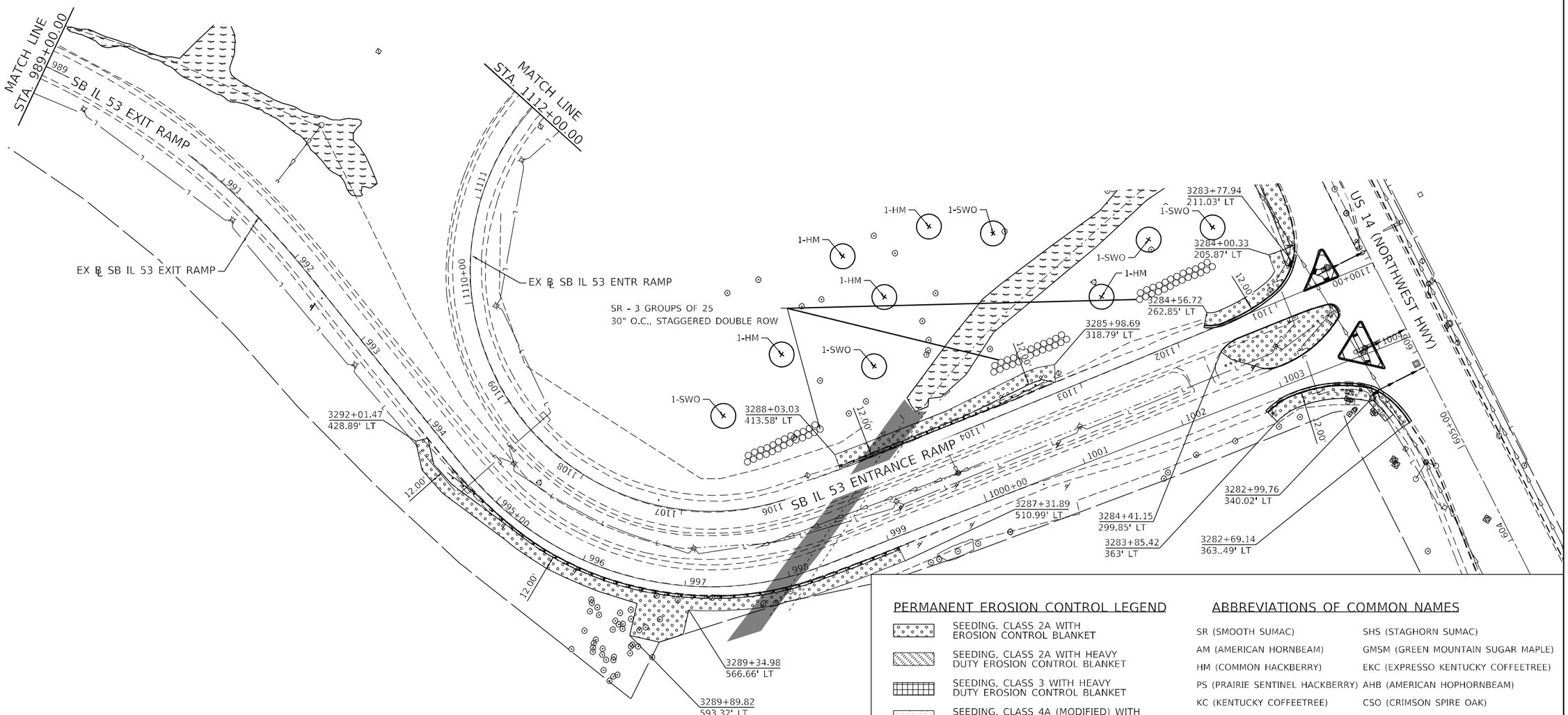

NOTES

1. ALL LANDSCAPED AREAS SHALL INCLUDE 6" OF NEW TOPSOIL UNLESS OTHERWISE NOTED. THIS WORK SHALL BE PAID FOR AS TOPSOIL FURNISH AND PLACE, 6"

2. FOR SLOPES STEEPER THAN 1:3, USE HEAVY DUTY EROSION CONTROL BLANKET.

3. SEE SHEET 495 FOR LANDSCAPING SCHEDULE

PERMANENT EROSION CONTROL LEGEND

- SEEDING, CLASS 2A WITH EROSION CONTROL BLANKET
- SEEDING, CLASS 2A WITH HEAVY DUTY EROSION CONTROL BLANKET
- SEEDING, CLASS 3 WITH HEAVY DUTY EROSION CONTROL BLANKET
- SEEDING, CLASS 4A (MODIFIED) WITH EROSION CONTROL BLANKET
- SEEDING, CLASS 4B/5B MIX WITH EROSION CONTROL BLANKET
- STONE RIPRAP, CLASS A3
- WETLANDS
- SURFACE WATERS
- PROPOSED TREE
- PROPOSED SHRUB

ABBREVIATIONS OF COMMON NAMES

SR (SMOOTH SUMAC)	SHS (STAGHORN SUMAC)
AM (AMERICAN HORNBEAM)	GMSM (GREEN MOUNTAIN SUGAR MAPLE)
HM (COMMON HACKBERRY)	EKC (EXPRESSO KENTUCKY COFFEETREE)
PS (PRAIRIE SENTINEL HACKBERRY)	AHB (AMERICAN HOPHORNBEAM)
KC (KENTUCKY COFFEETREE)	CSO (CRIMSON SPIRE OAK)
SWO (SWAMP WHITE OAK)	CSPL (CHINA SNOW PEKING LILAC)
CO (CHINKAPIN OAK)	MBCJ (MOUNTBATTEN CHINESE JUNIPER)
CBC (COMMON BALD CYPRESS)	BHS (BLACK HILLS SPRUCE)
AS (APPLE SERVICEBERRY)	SS (SERBIAN SPRUCE)
	BO (BUR OAK)

MODEL: Default
FILE NAME: S:\OL\6300-6399\6346\130Drawings\CADMicro-SS4\CAD_Sheets\C3-D162N91-sht-gdem-4rdys-25-IL53-SA-Ramp.dgn

STRAND ASSOCIATES®
1170 SOUTH HOUBOLT ROAD
JOLIET, ILLINOIS 60431
(815) 744-4200

USER NAME = vyatts	DESIGNED - MAG	REVISED -	
	DRAWN - DJW	REVISED -	
PLOT SCALE = 100.0000 ' / in.	CHECKED - DWG	REVISED -	
PLOT DATE = 9/23/2024	DATE - 8/23/2024	REVISED -	

STATE OF ILLINOIS
DEPARTMENT OF TRANSPORTATION

US 14 - NW RAMP
PERMANENT EROSION CONTROL PLAN

SCALE: 1" = 50' | SHEET 19 OF 21 SHEETS | STA. 989+00.00 TO STA.1004+00.00

F.A.P. RTE.	SECTION	COUNTY	TOTAL SHEETS	SHEET NO.
342	(531) BR 23	COOK	1211	493
		CONTRACT NO. 62W38		
		ILLINOIS	FED. AID PROJECT	

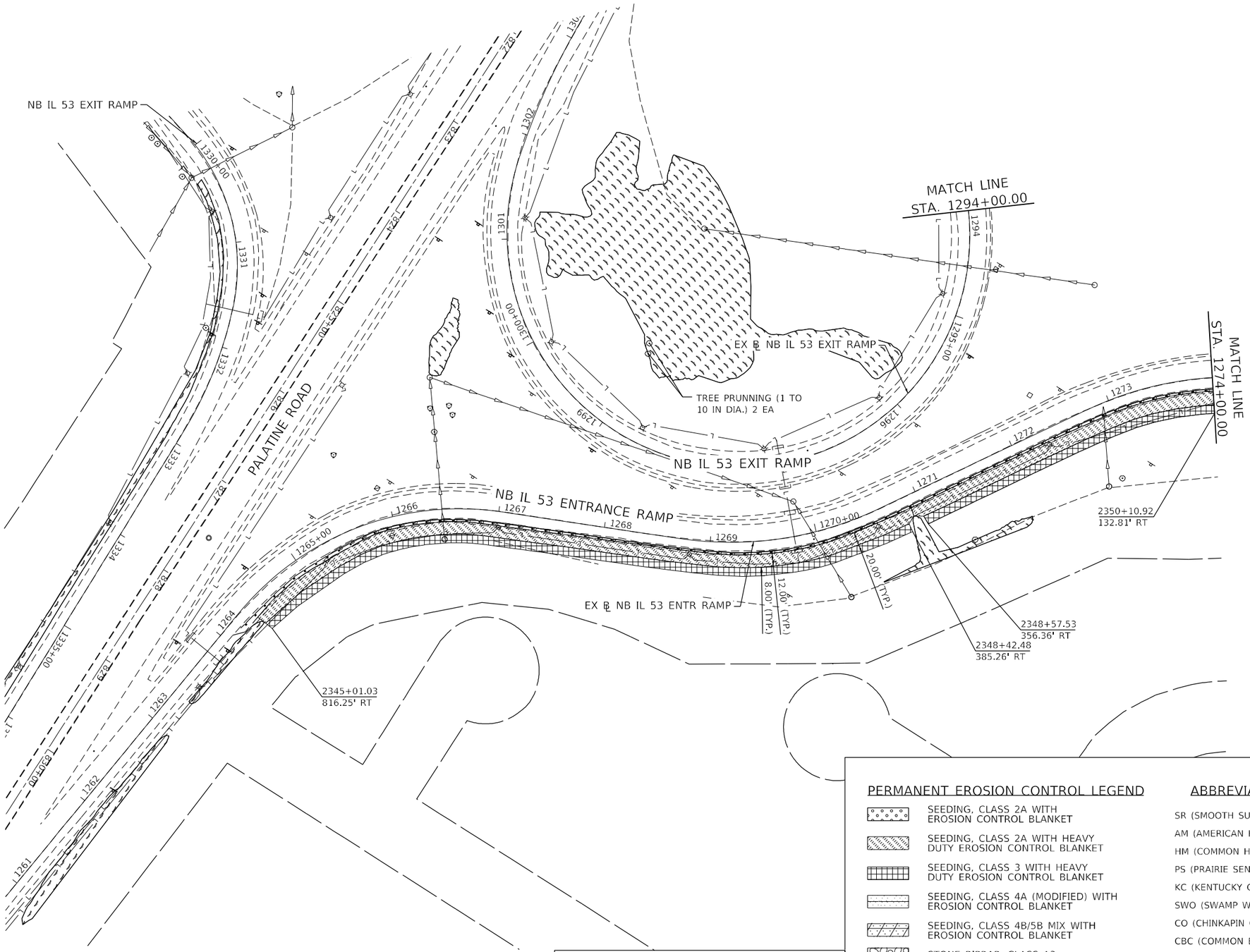

NOTES

1. ALL LANDSCAPED AREAS SHALL INCLUDE 6" OF NEW TOPSOIL UNLESS OTHERWISE NOTED. THIS WORK SHALL BE PAID FOR AS TOPSOIL FURNISH AND PLACE, 6"
2. FOR SLOPES STEEPER THAN 1:3, USE HEAVY DUTY EROSION CONTROL BLANKET.
3. SEE SHEET 495 FOR LANDSCAPING SCHEDULE

PERMANENT EROSION CONTROL LEGEND

- SEEDING, CLASS 2A WITH EROSION CONTROL BLANKET
- SEEDING, CLASS 2A WITH HEAVY DUTY EROSION CONTROL BLANKET
- SEEDING, CLASS 3 WITH HEAVY DUTY EROSION CONTROL BLANKET
- SEEDING, CLASS 4A (MODIFIED) WITH EROSION CONTROL BLANKET
- SEEDING, CLASS 4B/5B MIX WITH EROSION CONTROL BLANKET
- STONE RIPRAP, CLASS A3
- WETLANDS
- SURFACE WATERS
- PROPOSED TREE
- PROPOSED SHRUB

ABBREVIATIONS OF COMMON NAMES

SR (SMOOTH SUMAC)	SHS (STAGHORN SUMAC)
AM (AMERICAN HORNBEAM)	GMSM (GREEN MOUNTAIN SUGAR MAPLE)
HM (COMMON HACKBERRY)	EKC (EXPRESSO KENTUCKY COFFEETREE)
PS (PRAIRIE SENTINEL HACKBERRY)	AHB (AMERICAN HOPHORNBEAM)
KC (KENTUCKY COFFEETREE)	CSO (CRIMSON SPIRE OAK)
SWO (SWAMP WHITE OAK)	CSPL (CHINA SNOW PEKING LILAC)
CO (CHINKAPIN OAK)	MBCJ (MOUNTBATTEN CHINESE JUNIPER)
CBC (COMMON BALD CYPRESS)	BHS (BLACK HILLS SPRUCE)
AS (APPLE SERVICEBERRY)	SS (SERBIAN SPRUCE)
	BO (BUR OAK)

STRAND ASSOCIATES
1170 SOUTH HOUBOLT ROAD
JOLIET, ILLINOIS 60431
(815) 744-4200

USER NAME = noaha	DESIGNED - MAG	REVISED -	
	DRAWN - DJW	REVISED -	
PLOT SCALE = 100.0000 ' / in.	CHECKED - DWG	REVISED -	
PLOT DATE = 8/22/2024	DATE - 8/23/2024	REVISED -	

STATE OF ILLINOIS
DEPARTMENT OF TRANSPORTATION

PALATINE ROAD - NE RAMP
PERMANENT EROSION CONTROL PLAN

SCALE: 1" = 50' | SHEET 20 OF 21 SHEETS | STA. 1263+70.00 TO STA. 1274+00.00

F.A.P. RTE.	SECTION	COUNTY	TOTAL SHEETS	SHEET NO.
342	(531) BR 23	COOK	1211	494
		CONTRACT NO. 62W38		
		ILLINOIS FED. AID PROJECT		

MODEL: Default
FILE NAME: S:\DOI\6300-6399\6346\13\Drawings\CADMicro-SS4\CAD_Sheets\C3-D162N01-dlh-plem-eros-26-IL53-SA1-Ramp.dgn

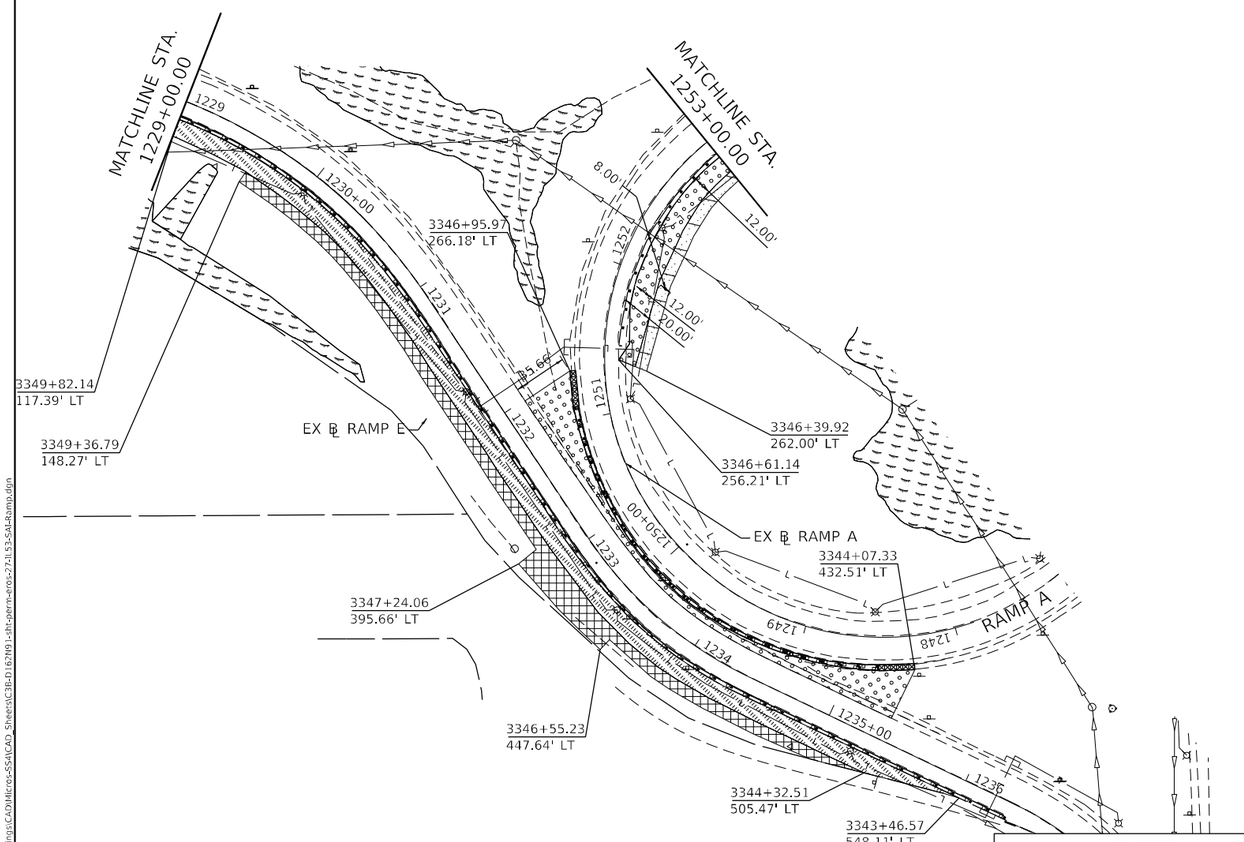

NOTES

1. ALL LANDSCAPED AREAS SHALL INCLUDE 6" OF NEW TOPSOIL UNLESS OTHERWISE NOTED. THIS WORK SHALL BE PAID FOR AS TOPSOIL FURNISH AND PLACE, 6"
2. FOR SLOPES STEEPER THAN 1:3, USE HEAVY DUTY EROSION CONTROL BLANKET.
3. SEE SHEET 495 FOR LANDSCAPING SCHEDULE

0 50 100 150
SCALE IN FEET

PROPOSED LANDSCAPING SCHEDULE

GREEN MOUNTAIN SUGAR MAPLE (A2001816)

FROM STATION	TO STATION	LT/RT	EACH
1207+65.00	1209+65.00	RT	3
1362+90.00	1364+40.00	RT	3

AMERICAN HORNBEAM (A2002516)

FROM STATION	TO STATION	LT/RT	EACH
1363+60.00	1364+95.00	LT	3

COMMON HACKBERRY (A2002916)

FROM STATION	TO STATION	LT/RT	EACH
1208+75.00	1212+70.00	LT	5
1213+60.00	1217+91.60	RT	6
1363+60.00	1364+95.00	LT	3
1284+95.00	1285+55.00	LT	2
1101+30.00	1106+55.00	RT	3

PRAIRIE SENTINEL HACKBERRY (A2003021)

FROM STATION	TO STATION	LT/RT	EACH
1324+05.00	1326+95.00	RT	5

KENTUCKY COFFEETREE (A2005016)

FROM STATION	TO STATION	LT/RT	EACH
1251+55.00	1253+30.00	LT	3

EXPRESSO KENTUCKY COFFEETREE (A2005037)

FROM STATION	TO STATION	LT/RT	EACH
1208+75.00	1212+70.00	LT	3
1362+90.00	1364+40.00	RT	3

AMERICAN HOPHORNBEAM (A2005615)

FROM STATION	TO STATION	LT/RT	EACH
1366+00.00	1366+85.00	LT	3

CRIMSON SPIRE OAK (A2064012)

FROM STATION	TO STATION	LT/RT	EACH
1324+05.00	1326+95.00	RT	5

BUR OAK (A2006716)

FROM STATION	TO STATION	LT/RT	EACH
1208+75.00	1212+70.00	LT	3
1338+95.00	1339+35.00	LT	3

SWAMP WHITE OAK (A2006516)

FROM STATION	TO STATION	LT/RT	EACH
1213+60.00	1217+91.60	RT	6
1101+30.00	1106+55.00	RT	5

CHINKAPIN OAK (A2006816)

FROM STATION	TO STATION	LT/RT	EACH
1257+30.00	1257+80.00	LT	2

COMMON BALD CYPRESS (A2007616)

FROM STATION	TO STATION	LT/RT	EACH
1213+60.00	1217+91.60	RT	6
1340+65.00	1341+05.00	RT	3

CHINA SNOW PEKING LILAC (B2006116)

FROM STATION	TO STATION	LT/RT	EACH
1251+55.00	1253+30.00	LT	5

MOUNT-BATTEN CHINESE JUNIPER (D2000372)

FROM STATION	TO STATION	LT/RT	EACH
1323+95.00	1326+95.00	RT	6

BLACK HILLS SPRUCE (D2001972)

FROM STATION	TO STATION	LT/RT	EACH
1208+75.00	1212+70.00	LT	3
1207+65.00	1209+65.00	RT	3

SERBIAN SPRUCE (D2002072)

FROM STATION	TO STATION	LT/RT	EACH
1208+75.00	1212+70.00	LT	3
1207+65.00	1209+65.00	RT	3
1366+00.00	1366+85.00	LT	3
1362+90.00	1364+40.00	RT	3

STAGHORN SUMAC (C3006024)

FROM STATION	TO STATION	LT/RT	EACH
1253+55.00	1255+40.00	LT	50
1363+30.00	1364+40.00	RT	30

SMOOTH SUMAC (C3005924)

FROM STATION	TO STATION	LT/RT	EACH
1101+40.00	1103+70.00	RT	50
1105+45.00	1106+30.00	RT	25

PERMANENT EROSION CONTROL LEGEND

- SEEDING, CLASS 2A WITH EROSION CONTROL BLANKET
- SEEDING, CLASS 2A WITH HEAVY DUTY EROSION CONTROL BLANKET
- SEEDING, CLASS 3 WITH HEAVY DUTY EROSION CONTROL BLANKET
- SEEDING, CLASS 4A (MODIFIED) WITH EROSION CONTROL BLANKET
- SEEDING, CLASS 4B/5B MIX WITH EROSION CONTROL BLANKET
- STONE RIPRAP, CLASS A3
- WETLANDS
- SURFACE WATERS
- PROPOSED TREE
- PROPOSED SHRUB

ABBREVIATIONS OF COMMON NAMES

SR (SMOOTH SUMAC)	GMSM (GREEN MOUNTAIN SUGAR MAPLE)
AM (AMERICAN HORNBEAM)	EKC (EXPRESSO KENTUCKY COFFEETREE)
HM (COMMON HACKBERRY)	AHB (AMERICAN HOPHORNBEAM)
PS (PRAIRIE SENTINEL HACKBERRY)	CSO (CRIMSON SPIRE OAK)
KC (KENTUCKY COFFEETREE)	CSPL (CHINA SNOW PEKING LILAC)
SWO (SWAMP WHITE OAK)	MBCJ (MOUNTBATTEN CHINESE JUNIPER)
CO (CHINKAPIN OAK)	BHS (BLACK HILLS SPRUCE)
CBC (COMMON BALD CYPRESS)	SS (SERBIAN SPRUCE)
SHS (STAGHORN SUMAC)	BO (BUR OAK)

MODEL: Default
FILE NAME: S:\JOL\6300-6399\6346\13D\Drawings\CADD\Micro-Station\CAD Sheets\C38-D162ND1-ch-perm-eros-7-1.53-SA-Ramp.dgn

STRAND ASSOCIATES®
1170 SOUTH HOUBOLT ROAD
JOLIET, ILLINOIS 60431
(815) 744-4200

USER NAME = vryatts	DESIGNED - MAG	REVISED -	
	DRAWN - DJW	REVISED -	
PLOT SCALE = 100.0000 ' / in.	CHECKED - DWG	REVISED -	
PLOT DATE = 9/23/2024	DATE - 8/23/2024	REVISED -	

STATE OF ILLINOIS
DEPARTMENT OF TRANSPORTATION

PALATINE ROAD - NW RAMP
PERMANENT EROSION CONTROL PLAN

SCALE: 1" = 50' | SHEET 21 OF 21 SHEETS | STA. 1229+00.00 TO STA. 1236+00.00

F.A.P. RTE.	SECTION	COUNTY	TOTAL SHEETS	SHEET NO.
342	(531) BR 23	COOK	1211	495
		CONTRACT NO. 62W38		
		ILLINOIS FED. AID PROJECT		

TRAFFIC SIGNAL LEGEND

(NOT TO SCALE)

ITEM	EXISTING	PROPOSED
CONTROLLER CABINET		
COMMUNICATION CABINET	CC	CC
MASTER CONTROLLER	MC	MC
MASTER MASTER CONTROLLER	MMC	MMC
UNINTERRUPTABLE POWER SUPPLY		
SERVICE INSTALLATION -(P) POLE MOUNTED	P	P
SERVICE INSTALLATION -(G) GROUND MOUNTED -(GM) GROUND MOUNTED METERED	G GM	G GM
TELEPHONE CONNECTION	ET	T
STEEL MAST ARM ASSEMBLY AND POLE		
ALUMINUM MAST ARM ASSEMBLY AND POLE		
STEEL COMBINATION MAST ARM ASSEMBLY AND POLE WITH LUMINAIRE		
SIGNAL POST -(BM) BARREL MOUNTED - TEMPORARY		BM
WOOD POLE		
GUY WIRE		
SIGNAL HEAD		
SIGNAL HEAD WITH BACKPLATE		
SIGNAL HEAD OPTICALLY PROGRAMMED	P P	P P
FLASHER INSTALLATION -(FS) SOLAR POWERED	F FS F FS	F FS F FS
PEDESTRIAN SIGNAL HEAD		
PEDESTRIAN PUSH BUTTON -(APS) ACCESSIBLE PEDESTRIAN PUSH BUTTON	APS	APS
RADAR DETECTION SENSOR	R	R
VIDEO DETECTION CAMERA	V	V
RADAR/VIDEO DETECTION ZONE		
PAN, TILT, ZOOM (PTZ) CAMERA	PTZ	PTZ
EMERGENCY VEHICLE LIGHT DETECTOR		
CONFIMATION BEACON		
WIRELESS INTERCONNECT		
WIRELESS INTERCONNECT RADIO REPEATER	ERR	RR

ITEM	EXISTING	PROPOSED
HANDHOLE -SQUARE -ROUND		
HEAVY DUTY HANDHOLE -SQUARE -ROUND	H H	H H
DOUBLE HANDHOLE		
JUNCTION BOX		
RAILROAD CANTILEVER MAST ARM		
RAILROAD FLASHING SIGNAL		
RAILROAD CROSSING GATE		
RAILROAD CROSSBUCK		
RAILROAD CONTROLLER CABINET		
UNDERGROUND CONDUIT (UC), GALVANIZED STEEL		
TEMPORARY SPAN WIRE, TETHER WIRE, AND CABLE		
SYSTEM ITEM	S	SP
INTERSECTION ITEM	I	IP
REMOVE ITEM		R
RELOCATE ITEM		RL
ABANDON ITEM		A
CONTROLLER CABINET AND FOUNDATION TO BE REMOVED		RCF
MAST ARM POLE AND FOUNDATION TO BE REMOVED		RMF
SIGNAL POST AND FOUNDATION TO BE REMOVED		RPF
DETECTOR LOOP, TYPE I		
PREFORMED DETECTOR LOOP	P P	P P
SAMPLING (SYSTEM) DETECTOR	S S	S S
INTERSECTION AND SAMPLING (SYSTEM) DETECTOR	IS IS	IS IS
QUEUE AND SAMPLING (SYSTEM) DETECTOR	QS QS	QS QS
WIRELESS DETECTOR SENSOR	W	W
WIRELESS ACCESS POINT		

ITEM	EXISTING	PROPOSED
SIGNAL HEAD -(P) PROGRAMMABLE SIGNAL HEAD	R Y G Y G P	R Y G Y G P
SIGNAL HEAD WITH BACKPLATE -(P) PROGRAMMABLE SIGNAL HEAD -(RB) RETROREFLECTIVE BACKPLATE	R Y G Y G P RB	R Y G Y G P RB
PEDESTRIAN SIGNAL HEAD AT RAILROAD INTERSECTIONS		
PEDESTRIAN SIGNAL HEAD WITH COUNTDOWN TIMER	C D	C D
ILLUMINATED SIGN "NO LEFT TURN"/"NO RIGHT TURN"		
NUMBER OF CONDUCTORS, ELECTRIC CABLE NO. 14, UNLESS NOTED OTHERWISE. ALL DETECTOR LOOP CABLE TO BE SHIELDED	5	5
GROUND CABLE IN CONDUIT, NO. 6 SOLID COPPER (GREEN)	1#6	1#6
ELECTRIC CABLE IN CONDUIT, TRACER NO. 14 1/C	1	1
COAXIAL CABLE	C	C
VENDOR CABLE	V	V
COPPER INTERCONNECT CABLE, NO. 18, 3 PAIR TWISTED, SHIELDED	6#18	6#18
FIBER OPTIC CABLE -NO. 62.5/125, MM12F -NO. 62.5/125, MM12F SM12F -NO. 62.5/125, MM12F SM24F	12F 24F 36F	12F 24F 36F
GROUND ROD -(C) CONTROLLER -(M) MAST ARM -(P) POST -(S) SERVICE	C M P S	C M P S

MODE.: Default
FILE NAME: pw:\\IL084EBIDINTEG.illinois.gov:PWIDOT\Documents\IDOT Offices\District 1\Projects\DistStd22x34\CADData\CADsheets\ts05.dgn

USER NAME = footemj	DESIGNED - IP	REVISED -	
	DRAWN - IP	REVISED -	
PLOT SCALE = 50.0000 ' / in.	CHECKED - LP	REVISED -	
PLOT DATE = 3/4/2019	DATE - 9/29/2016	REVISED -	

STATE OF ILLINOIS
DEPARTMENT OF TRANSPORTATION

DISTRICT ONE
STANDARD TRAFFIC SIGNAL DESIGN DETAILS

SCALE: NONE | SHEET 1 OF 7 SHEETS | STA. TO STA.

F.A.P. RTE.	SECTION	COUNTY	TOTAL SHEETS	SHEET NO.
342	2018-100-BR	COOK	1211	496
	TS-05	CONTRACT NO. 62W38		
		ILLINOIS	FED. AID PROJECT	

ts05.dgn 3/4/2019 11:21:59 AM User:footemj

LOOP DETECTOR NOTES

1. EACH PAIR OF LOOP WIRES SHALL BE PLACED IN A SEPARATE EMPTY COILABLE NONMETALLIC CONDUIT FROM THE EDGE OF PAVEMENT TO THE HANDHOLE. SPACING BETWEEN THE HOLES DRILLED IN THE PAVEMENT SHALL NOT BE LESS THAN 6" (150 mm). EMPTY COILABLE NONMETALLIC CONDUIT SHALL BE INCLUDED IN THE COST OF THE LOOP WIRE.

2. THE NUMBER OF LOOP TURNS SHALL BE AS RECOMMENDED BY THE AMPLIFIER MANUFACTURER. ALL ADJACENT SIDES OF THE LOOPS SHALL BE INSTALLED IN SUCH A WAY THAT THE CURRENT FLOW IS IN THE SAME DIRECTION TO REINFORCE ITS MAGNETIC FIELDS FOR SMALL VEHICLE DETECTION.

3. EACH LOOP LEAD-IN SHALL BE IDENTIFIED AND PERMANENTLY TAGGED IN THE HANDHOLE. EACH LEAD-IN CABLE TAG SHALL INDICATE THE LOCATION OF THE LOOP, LOOP ROTATION (CLOCKWISE/COUNTERCLOCKWISE), LOOP LEAD-IN DIRECTION (IN OR OUT), LOOP CABLE NUMBER AND LOCATION IN CABINET, AND NUMBER OF TURNS IN THE DETECTOR LOOPS IN WATER PROOF INK AS INDICATED ON THE DISTRICT 1 STANDARD TRAFFIC SIGNAL DESIGN DETAIL. THE CONTRACTOR SHALL MARK LOOP LOCATIONS ON RECORD DRAWINGS AND PRESENT TO THE ENGINEER AFTER FINAL INSPECTION. LOOPS SHALL BE MARKED BY LANE AND LOOP NUMBER. SEE DETAIL BELOW.

4. ALL LOOP CABLE SHALL BE FASTENED WITH PLASTIC TIE WRAP TO THE HANDHOLE HOOKS.

5. IN ASPHALT PAVEMENT, LOOPS SHOULD BE PLACED IN THE BINDER AND DIVEHOLES MARKED AT THE CURB WITH A SAW-CUT. THE SAW-CUT SHALL BE CUT IN ACCORDANCE WITH LOCAL AND E.P.A. DUST CONTROL REQUIREMENTS. DETECTOR LOOP(S) SHALL NOT BE INSTALLED IN WET CONDITIONS AND THE SAW-CUTS MUST BE FREE OF DEBRIS AND RESIDUE SUCH AS DUST AND WATER WHICH IS TO BE ACHIEVED BY THE USE OF COMPRESSED AIR, WIRE BRUSHING AND HEAT DRYING ACCORDING TO SEALANT MANUFACTURER REQUIREMENTS. THE DETECTOR WIRE SHALL BE HELD IN PLACE BY THE USE OF FORM WEDGES. WEDGES SHALL BE SPACED NO MORE THAN 18" (450 mm) APART.

6. LOOP SPLICES SHALL BE SOLDERED USING A SOLDERING IRON. BLOW TORCHES OR OTHER DEVICES WHICH OXIDIZE COPPER CABLE SHALL NOT BE ALLOWED FOR SOLDERING OPERATIONS. SEE DETAIL BELOW RIGHT.

7. PREFORMED DETECTOR LOOPS SHALL BE USED, AS SHOWN ON THE PLANS, WHERE NEW CONCRETE PAVEMENT IS PROPOSED. THE INSTALLATION OF PREFORMED LOOPS SHALL BE IN ACCORDANCE WITH THE DISTRICT 1 SPECIFICATIONS OR AS DIRECTED BY THE ENGINEER.

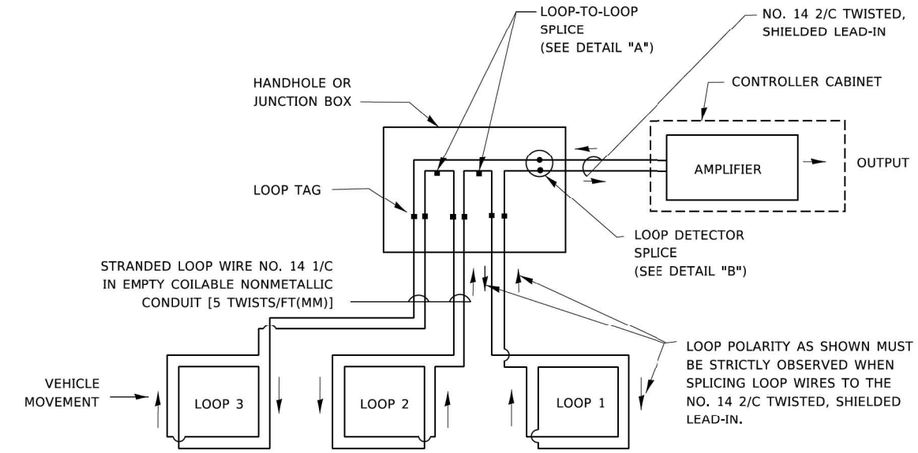

DETECTOR LOOP WIRING SCHEMATIC

- LOOPS SHALL BE SPLICED IN SERIES. SAW-CUTS SHALL BE A MINIMUM WIDTH OF 5/16" (8 mm).
- SAW-CUT DEPTHS SHALL BE 3" (75 mm). IF IN CONCRETE,
- THE SAW-CUT DEPTH SHALL BE TO THE TOP OF THE REINFORCEMENT.
- LOOP CORNERS SHALL BE DRILLED WITH A 2" (50 mm) DIAMETER CORE.

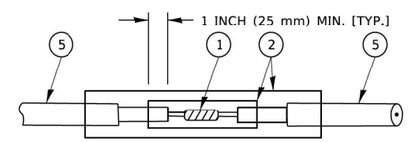

DETAIL "A"
LOOP-TO-LOOP SPLICE

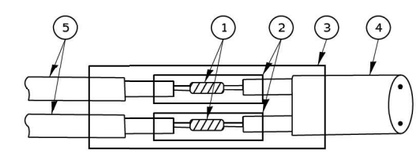

DETAIL "B"
LOOP-TO-CONTROLLER SPLICE

TYPE I LOOP

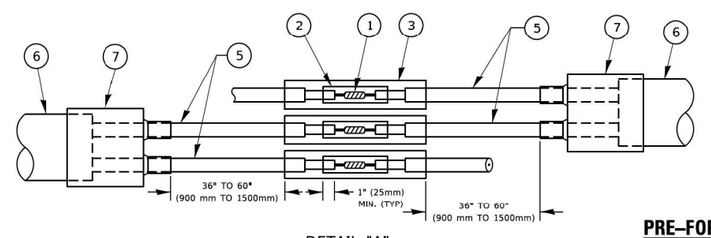

DETAIL "A"
LOOP-TO-LOOP SPLICE

PRE-FORMED LOOP

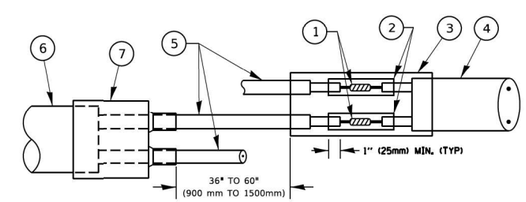

DETAIL "B"
LOOP-TO-CONTROLLER SPLICE

LOOP LEAD-IN CABLE TAG

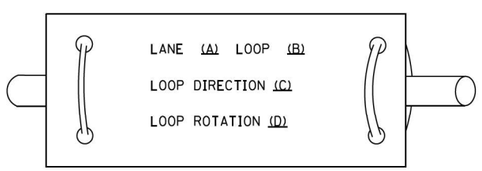

A. LANE 1 IS THE LANE CLOSEST TO THE CENTERLINE OF THE ROADWAY
B. LOOP #1 IS THE LOOP IN THE LANE CLOSEST TO THE INTERSECTION.
C. LABEL LOOP CABLE "IN" OR LOOP CABLE "OUT".
D. LABEL LOOP CABLE CLOCKWISE OR LOOP CABLE COUNTERCLOCKWISE.

LOOP DETECTOR SPLICE

1. WESTERN UNION SPLICE SOLDERED WITH ROSIN CORE FLUX. ALL EXPOSED SURFACES OF THE SOLDER SHALL BE SMOOTH. THE WESTERN UNION SPLICES SHALL BE STAGGERED.
2. WCSMW 30/100 HEAT SHRINK TUBE, MINIMUM LENGTH 3" (75 mm), UNDERWATER GRADE.
3. WCS 200/750 HEAT SHRINK TUBE, MINIMUM LENGHT 6" (150 mm), UNDERWATER GRADE.
4. NO. 14 2/C TWISTED, SHIELDED CABLE.
5. LOOP CONDUCTOR WITH FLEXIBLE PLASTIC TUBE. PRE-FORMED LOOP
6. XL POLYOLEFIN 2 CONDUCTOR
7. BREAKOUT SEALS. TYCO CBR-2 OR APPROVED EQUAL

TRAFFIC SIGNAL MAST ARM AND SIGNAL POST

MAST ARM MOUNTED SIGNALS IN EXISTING, PROPOSED OR FUTURE SIDEWALK/BICYCLE PATH AREA. INTERSECTION SHOWN WITH PEDESTRIAN SIGNALS AND PEDESTRIAN PUSHBUTTON DETECTORS.

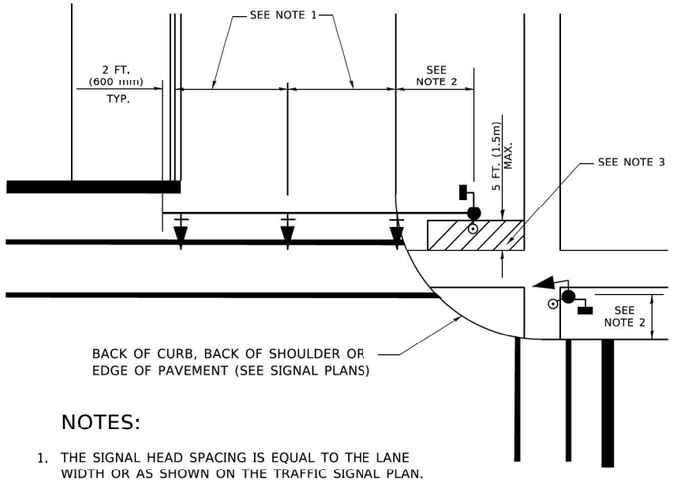

NOTES:

1. THE SIGNAL HEAD SPACING IS EQUAL TO THE LANE WIDTH OR AS SHOWN ON THE TRAFFIC SIGNAL PLAN.
2. REFER TO THE TRAFFIC SIGNAL EQUIPMENT OFFSET TABLE.
3. PROVIDE A LEVEL ALL-WEATHER SURFACE (CONCRETE SIDEWALK, ASPHALT BICYCLE PATH SURFACE OR MATCHING MATERIAL TO THE ADJACENT SURFACE) UP TO THE MAST ARM SHAFT OR THE SIGNAL POST.
4. THE FACE OF THE PEDESTRIAN PUSHBUTTON SHALL BE PARALLEL TO THE CROSSWALK TO BE USED.
5. THE LOCATIONS AND INSTALLATION OF PEDESTRIAN SIGNAL HEADS AND PEDESTRIAN PUSHBUTTONS SHALL MEET THE REQUIREMENTS OF THE MUTCD AND INFORMATION FOUND IN THE "AMERICANS WITH DISABILITIES ACT ACCESSIBILITY GUIDELINES FOR BUILDINGS AND FACILITIES."

PEDESTRIAN SIGNAL POST AND PEDESTRIAN PUSH BUTTON POST

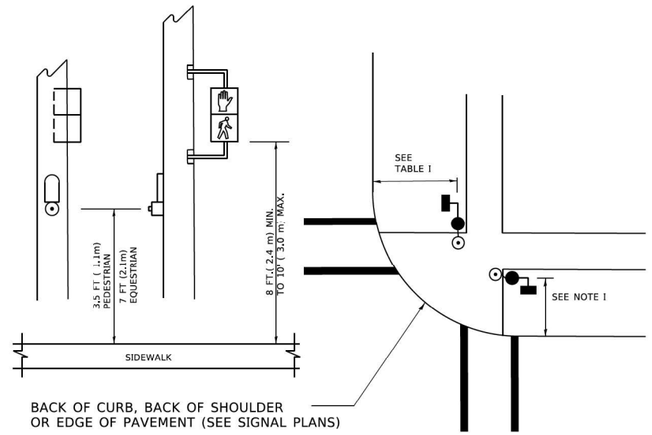

NOTES:

1. REFER TO THE TRAFFIC SIGNAL EQUIPMENT OFFSET TABLE.
2. PROVIDE A LEVEL ALL-WEATHER SURFACE (CONCRETE SIDEWALK, ASPHALT BICYCLE PATH SURFACE OR MATCHING MATERIAL TO THE ADJACENT SURFACE) UP TO THE PEDESTRIAN SIGNAL POST OR THE PEDESTRIAN PUSH BUTTON POST.
3. THE FACE OF THE PEDESTRIAN PUSHBUTTON SHALL BE PARALLEL TO THE CROSSWALK TO BE USED.
4. THE LOCATIONS AND INSTALLATION OF PEDESTRIAN SIGNAL HEADS AND PEDESTRIAN PUSHBUTTONS SHALL MEET THE REQUIREMENTS OF THE MUTCD AND INFORMATION FOUND IN THE "AMERICANS WITH DISABILITIES ACT ACCESSIBILITY GUIDELINES FOR BUILDINGS AND FACILITIES."

RECOMMENDED PUSHBUTTON LOCATIONS

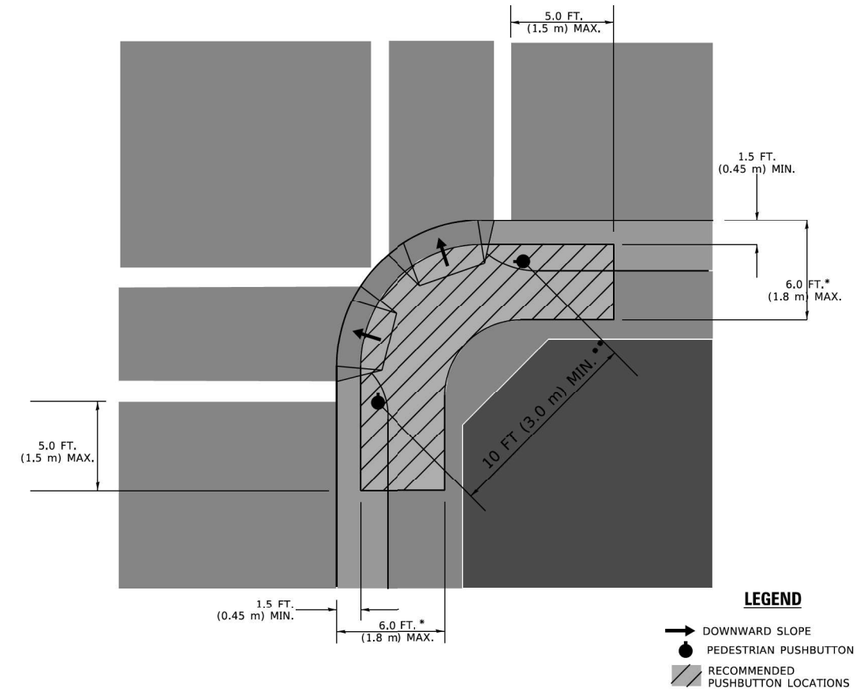

* WHERE THERE ARE CONSTRAINTS THAT MAKE IT IMPRACTICAL TO PLACE THE PEDESTRIAN PUSHBUTTON BETWEEN 1.5 FT (0.45 m) AND 6 FT (1.8 m) FROM THE EDGE OF THE CURB, SHOULDER, OR PAVEMENT, IT SHOULD NOT BE FURTHER THAN 10 FT (3 m) FROM THE EDGE OF CURB, SHOULDER, OR PAVEMENT.

** WHERE THERE ARE CONSTRAINTS ON A PARTICULAR CORNER THAT MAKE IT IMPRACTICAL TO PROVIDE THE 10 FT (3 m) SEPERATION BETWEEN THE TWO PEDESTRIAN PUSHBUTTONS, THE PUSHBUTTONS MAY BE PLACED CLOSER TOGETHER OR ON THE SAME POLE.

NOTES:

1. PEDESTRIAN SIGNAL HEADS SHALL BE MOUNTED WITH THE BOTTOM OF THE SIGNAL HOUSING INCLUDING BRACKETS NOT LESS THAN 8 FT (2.4 m) OR MORE THAN 10 FT (3 m) ABOVE SIDEWALK LEVEL, AND SHALL BE POSITIONED AND ADJUSTED TO PROVIDE MAXIMUM VISIBILITY AT THE BEGINNING OF THE CONTROLLED CROSSWALK.
2. THE BOTTOM OF THE SIGNAL HOUSING (INCLUDING BRACKETS) OF A VEHICULAR SIGNAL FACE THAT IS NOT LOCATED OVER A HIGHWAY SHALL BE AT LEAST 8 FT (2.4 m) BUT NOT MORE THAN 19 FT (5.8 m) ABOVE THE SIDEWALK OR, IF THERE IS NO SIDEWALK, ABOVE THE PAVEMENT GRADE AT THE CENTER OF THE ROADWAY.
3. THE BOTTOM OF THE SIGNAL HOUSING AND ANY RELATED ATTACHMENTS TO A SIGNAL FACE LOCATED OVER ANY PORTION OF A HIGHWAY SHALL BE ACCORDING TO CURRENT STATE STANDARDS 877001, 877002, 877006, 877011 AND 877012 WITH A MINIMUM OF 16 FT (5.0 m) AND A MAXIMUM OF 18 FT. (5.5 m) FROM THE HIGHEST POINT OF PAVEMENT.
4. THE BOTTOM OF THE TEMPORARY SPAN WIRE MOUNTED SIGNAL HOUSING AND ANY RELATED ATTACHMENTS TO A SIGNAL FACE LOCATED OVER ANY PORTION OF A HIGHWAY SHALL BE ACCORDING TO CURRENT STATE STANDARD 880001 WITH A MINIMUM OF 17 FT (5.18 m) FROM THE HIGHEST POINT OF PAVEMENT.
5. THE TOP OF THE SIGNAL HOUSING OF A SIGNAL FACE LOCATED OVER ANY PORTION OF A HIGHWAY SHALL NOT BE MORE THAN 25.6 FT (7.8 m) ABOVE THE PAVEMENT.

TRAFFIC SIGNAL EQUIPMENT OFFSET

TRAFFIC SIGNAL EQUIPMENT	COMBINATION CONCRETE CURB AND GUTTER (MINIMUM DISTANCE FROM BACK OF CURB TO CENTERLINE OF FOUNDATION)	SHOULDER/NON-CURBED AREA (MINIMUM DISTANCE FROM EDGE OF PAVEMENT TO CENTERLINE OF FOUNDATION)
TRAFFIC SIGNAL MAST ARM POLE	6 FT (1.8m)	SHOULDER WIDTH + 2 FT (0.6m), MINIMUM 10 FT (3.0m)
TRAFFIC SIGNAL POST	4 FT (1.2m)	SHOULDER WIDTH + 2 FT (0.6m), MINIMUM 10 FT (3.0m)
PEDESTRIAN SIGNAL POST	4 FT (1.2m)	SHOULDER WIDTH + 2 FT (0.6m), MINIMUM 10 FT (3.0m)
PEDESTRIAN PUSHBUTTON POST	4 FT (1.2m)	SHOULDER WIDTH + 2 FT (0.6m), MINIMUM 10 FT (3.0m)
TEMPORARY WOOD POLE	6 FT (1.8m)	SHOULDER WIDTH + 2 FT (0.6m), MINIMUM 10 FT (3.0m)
CONTROLLER CABINET	6 FT (1.8m) MINIMUM DISTANCE SEE NOTE 2	SHOULDER WIDTH + 6 FT (1.8m), MINIMUM 16 FT (4.9m) SEE NOTE 3.
SERVICE INSTALLATION, GROUND MOUNT	6 FT (1.8m) MINIMUM DISTANCE SEE NOTE 2	SHOULDER WIDTH + 6 FT (1.8m), MINIMUM 16 FT (4.9m) SEE NOTE 3.

NOTES:

1. CONTACT THE "AREA TRAFFIC SIGNAL MAINTENANCE AND OPERATIONS ENGINEER" FOR ASSISTANCE IN LOCATING THE TRAFFIC SIGNAL EQUIPMENT WHEN THERE ARE CONFLICTS WITH DITCHES OR THE MINIMUM OFFSET DISTANCES CANNOT BE MET.
2. MINIMUM DISTANCE FROM THE BACK OF CURB TO THE ROADWAY SIDE OF THE FOUNDATION.
3. MINIMUM DISTANCE FROM THE EDGE OF PAVEMENT TOTHE ROADWAY SIDE OF THE FOUNDATION.
4. ANY CHANGES TO THE OFFSETS OF THE FOUNDATIONS, FROM THE MINIMUM DISTANCES LISTED IN THE "TRAFFIC SIGNAL EQUIPMENT OFFSET" CHART AND THE TRAFFIC SIGNAL INSTALLATION PLAN, COULD EFFECT THE PLACEMENT OF THE SIGNAL HEADS, PEDESTRIAN SIGNAL HEADS AND THE PEDESTRIAN PUSHBUTTONS. THE SIGNAL HEAD PLACEMENT ON THE MAST ARMS SHALL REMAIN AS PER THE TRAFFIC SIGNAL INSTALLATION PLAN AND THE "TRAFFIC SIGNAL MAST ARM AND SIGNAL POST" DETAIL ABOVE. THE PROPOSED MAST ARM LENGTHS MAY NEED TO BE REVISED TO MEET THE ABOVE REQUIREMENTS. THE PEDESTRIAN SIGNAL HEADS AND PEDESTRIAN PUSHBUTTONS MUST MEET THE REQUIREMENTS UNDER THE DETAILS ON THIS SHEET.

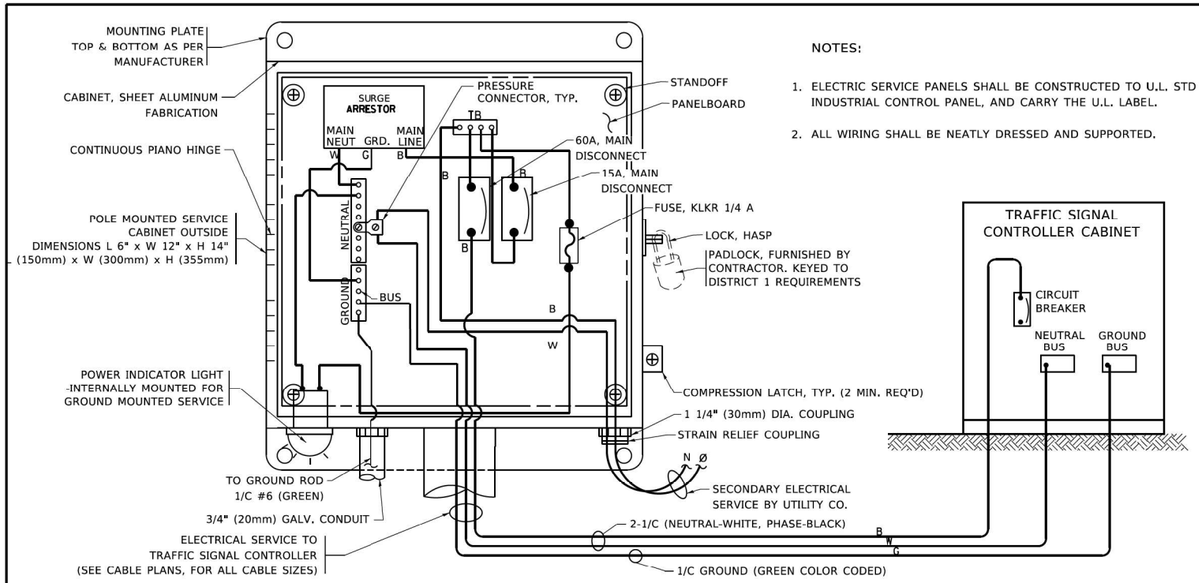

NOTES:

1. ELECTRIC SERVICE PANELS SHALL BE CONSTRUCTED TO U.L. STD 508, INDUSTRIAL CONTROL PANEL, AND CARRY THE U.L. LABEL.
2. ALL WIRING SHALL BE NEATLY DRESSED AND SUPPORTED.

ELECTRICAL SERVICE – PANEL DIAGRAM (TYPICAL FOR POLE AND GROUND MOUNTED SERVICE)

SERVICE INSTALLATION POLE MOUNT (SHOWN)

(NOT TO SCALE)

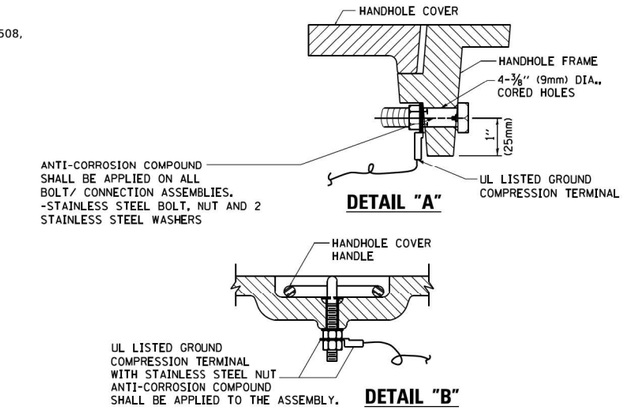

NOTES:

GROUNDING SYSTEM

1. THE GROUNDING SYSTEM SHALL CONSIST OF AN INSULATED CONDUCTOR TYPE XLP, NO. 6 A.W.G., STRANDED COPPER TO BE INSTALLED IN RACEWAYS. THE GROUNDING CABLE SHALL BE INSTALLED IN A CONTINUOUS MANNER AS SHOWN ON THE CABLE PLAN PROVIDED. ALL GROUNDING CONDUCTORS SHALL BE BONDED TO METAL ENCLOSURE (HANDHOLE, POST, MAST ARM, CONTROLLER, ETC,). GROUND ROD SHALL BE 3/4" DIA. x 10'-0" (20mm x 3.0m) LONG, COPPER CLAD. ONE GROUND ROD SHALL BE INSTALLED AT ALL POST FOUNDATIONS, POLE FOUNDATIONS, CONTROLLER CABINET FOUNDATION AND ELECTRICAL SERVICE INSTALLATION AS INDICATED ON THE CABLE PLAN. IF THERE ARE ANY SPECIAL CONDITIONS SUCH AS SUB-SURFACE CONDITIONS OR INSTALLATION PROBLEMS, THE RESIDENT ENGINEER SHALL BE NOTIFIED OR CONTACT THE BUREAU OF TRAFFIC, ILLINOIS DEPARTMENT OF TRANSPORTATION DISTRICT ONE AT (847) 705-4139.
2. THE NEUTRAL CONDUCTOR AND THE GROUND CONDUCTOR SHALL BE CONNECTED IN THE SERVICE INSTALLATION. AT NO OTHER POINT IN THE TRAFFIC SIGNAL SYSTEM SHALL THE NEUTRAL AND GROUND CONDUCTORS BE CONNECTED.
3. ALL EQUIPMENT GROUNDING CONDUCTORS SHALL TERMINATE AT THE GROUND BUS IN THE CONTROLLER CABINET.
4. THE CONTRACTOR SHALL PROVIDE A GROUND CABLE WITH CONNECTORS BETWEEN THE HANDHOLE COVER AND HANDHOLE FRAME.

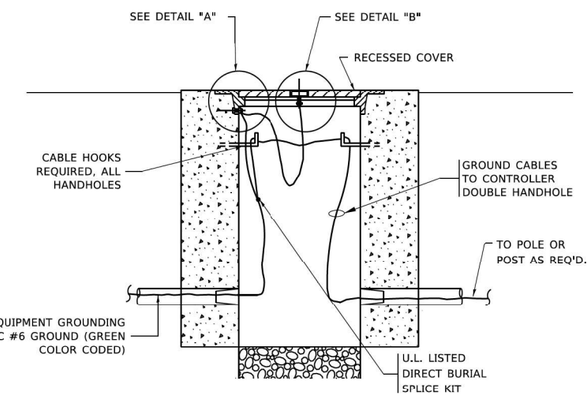

HANDHOLE COVER & FRAME – GROUNDING DETAIL

(NOT TO SCALE)

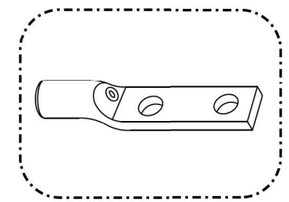

HEAVY-DUTY COMPRESSION TERMINAL (BURNDY TYPE YGHA OR APPROVED EQUAL)

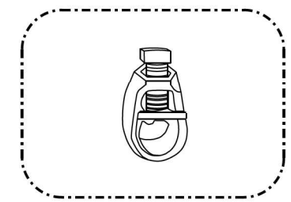

¾" (20mm) HEAVY-DUTY GROUND ROD CLAMP (BURNDY TYPE GRC OR APPROVED EQUAL)

NOTES:

- ALL CLAMPS SHALL BE BRONZE OR COPPER, UL APPROVED.
- GROUND CABLE SHALL BE LOOPED OVER HOOKS IN THE HANDHOLES
  6.5' (2.0m) SLACK SHALL BE PROVIDED IN SINGLE HANDHOLES
  13' (4.0m) OF SLACK SHALL BE PROVIDED IN DOUBLE HANDHOLES.
  5' (1.4m) OF SLACK SHALL BE PROVIDED BETWEEN FRAME AND COVER.

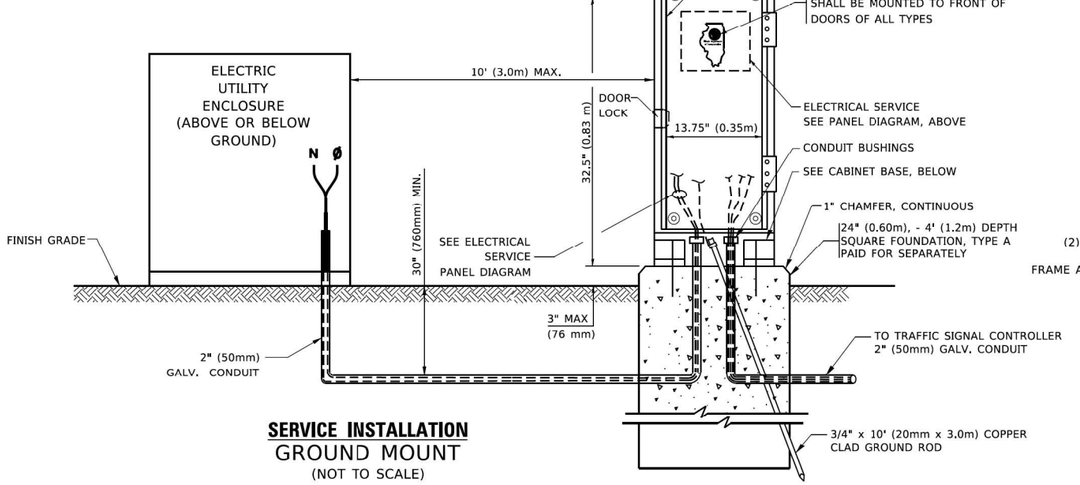

SERVICE INSTALLATION

GROUND MOUNT

(NOT TO SCALE)

EXISTING HANDHOLE COVER & FRAME – GROUNDING DETAIL

(NOT TO SCALE)

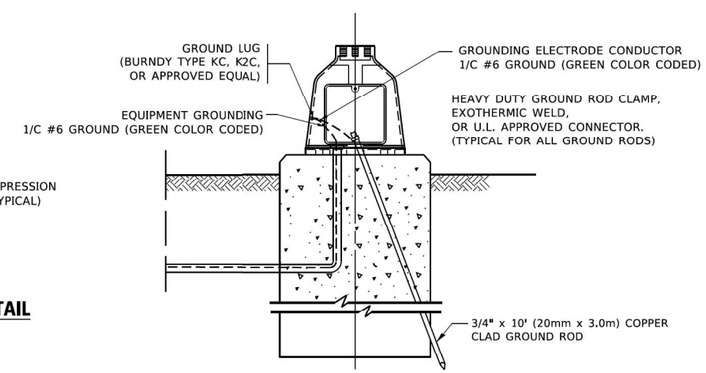

MAST ARM POLE /POST–GROUNDING DETAIL

(NOT TO SCALE)

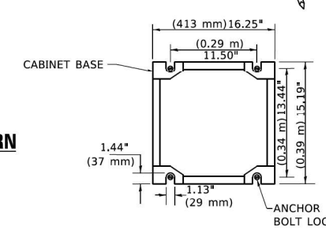

CABINET – BASE BOLT PATTERN

(NOT TO SCALE)

MODE:: Default
FILE NAME: pw:\\IL084EBIDINTEG.illinois.gov:PWIDOT\Documents\IDOT Offices\District 1\Projects\DistStd22x34\CADData\CADsheets\ts05.dgn

USER NAME = footemj	DESIGNED -	REVISED -	
	DRAWN -	REVISED -	
PLOT SCALE = 50.0000 ' / in.	CHECKED -	REVISED -	
PLOT DATE = 3/4/2019	DATE -	REVISED -	

STATE OF ILLINOIS
DEPARTMENT OF TRANSPORTATION

DISTRICT ONE
STANDARD TRAFFIC SIGNAL DESIGN DETAILS

SCALE: NONE | SHEET 4 OF 7 SHEETS | STA. TO STA.

F.A.P. RTE.	SECTION	COUNTY	TOTAL SHEETS	SHEET NO.
342	2018-100-BR	COOK	1211	499
	TS-05	CONTRACT NO. 62W38		
		ILLINOIS	FED. AID PROJECT	

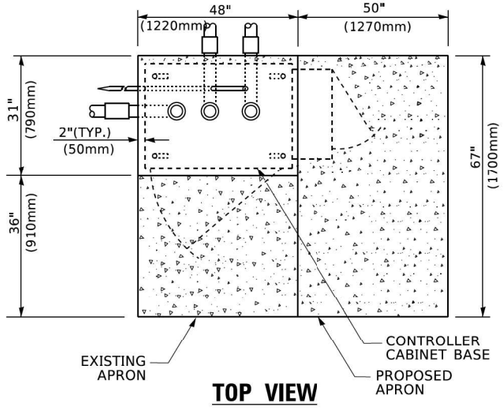

TOP VIEW

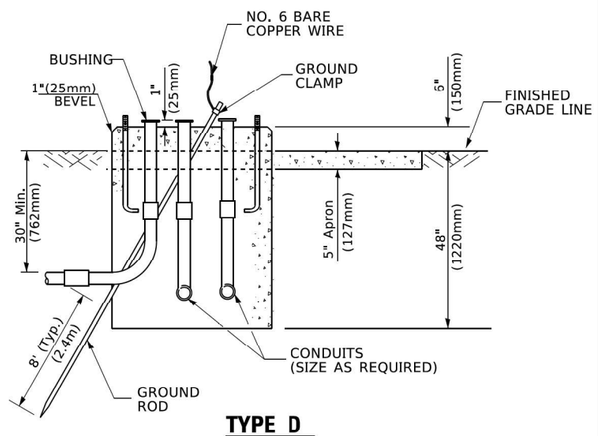

TYPE D
FOR GROUND MOUNTED CONTROLLER CABINET AND UPS BATTERY CABINET

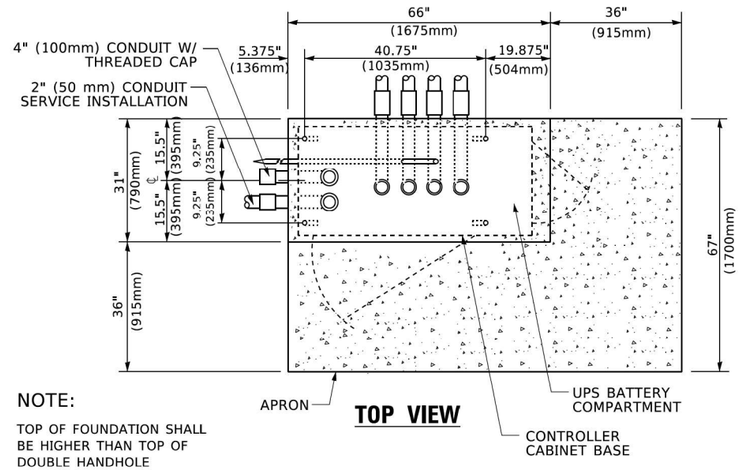

NOTE:

TOP OF FOUNDATION SHALL BE HIGHER THAN TOP OF DOUBLE HANDHOLE

TOP VIEW

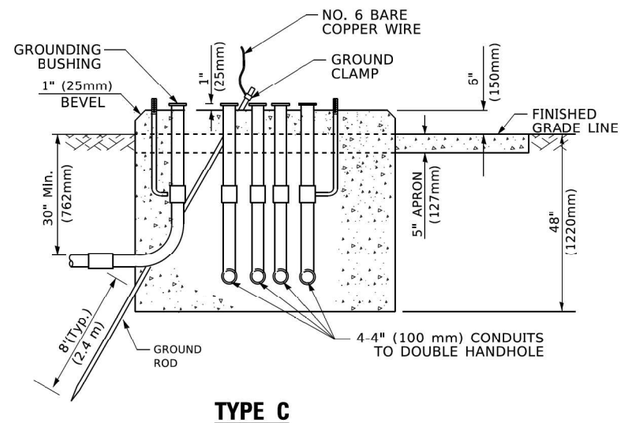

TYPE C
FOR GROUND MOUNTED SUPER P (TYPE IV) AND SUPER R (TYPE V) CONTROLLER CABINETS

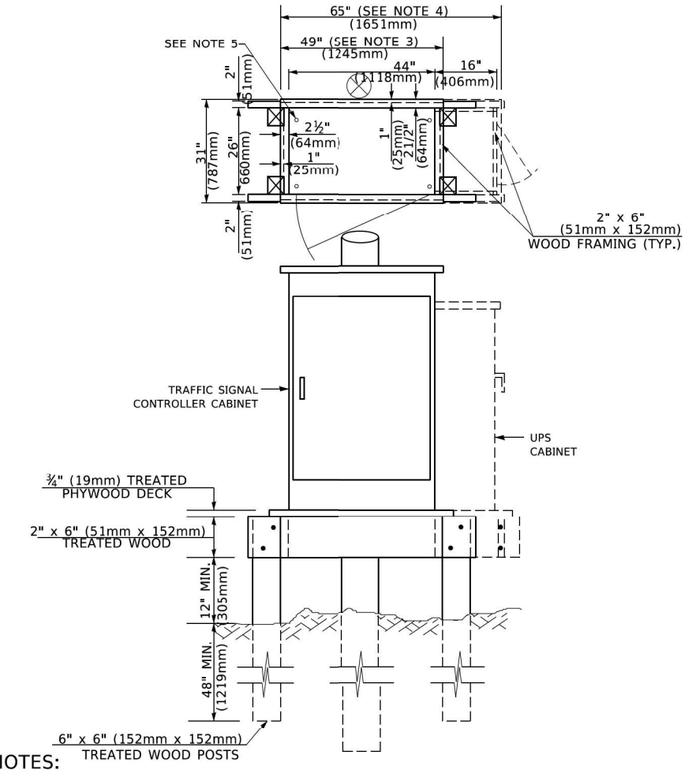

NOTES:

1. BASED ON CONTROLLER CABINET TYPE IV WITH BASE DIMENSIONS OF 26" x 44" (660mm x 1118mm). ADJUST PLATFORM SIZE TO FIT CABINET BASE DIMENSIONS BEING SUPPLIED
2. BASED ON UNINTERRUPTIBLE POWER SUPPLY CABINET WITH BASE DIMENSIONS OF 16" x 25" (406mm x 635mm). ADJUST PLATFORM SIZE TO FIT CABINET BASE DIMENSIONS BEING SUPPLIED.
3. PLATFORM SIZE FOR CONTROLLER CABINET TYPE IV.
4. PLATFORM SIZE FOR CONTROLLER CABINET TYPE IV AND UNINTERRUPTIBLE POWER SUPPLY CABINET.
5. DRILLED HOLES THROUGH THE PLATFORM BASE TO MATCH THE CONTROLLER CABINET BOLT TEMPLATE. FASTEN THE CONTROLLER CABINET TO THE PLATFORM WITH CARRIAGE BOLTS, WASHERS AND NUTS.
6. FASTEN ALL SUPPORT WOOD FRAMING TO THE WOOD POSTS WITH 2 LAG SCREWS FOR EACH CONNECTION..

TEMPORARY SIGNAL CONTROLLER WOOD SUPPORT PLATFORM

CABLE SLACK LENGTH	FEET	METER
HANDHOLE	6.5	2.0
DOUBLE HANDHOLE	13.0	4.0
SIGNAL POST	2.0	0.6
MAST ARM	2.0	0.6
CONTROLLER CABINET	1.5	0.5
FIBER OPTIC AT CABINET	13.0	4.0
ELECTRIC SERVICE AT (CABINET OR SERVICE LOCATION)	1.5	0.5
GROUND CABLE (SIGNAL POST, MAST ARM, CABINET)	1.5	0.5
GROUND CABLE (BETWEEN FRAME AND COVER)	5.0	1.6

CABLE SLACK

VERTICAL CABLE LENGTH	FEET	METER
MAST ARM POLE (MAST ARM MOUNTED SIGNAL HEAD) (L = MAST ARM LENGTH - DISTANCE TO SIGNAL HEAD FROM END OF ARM)	20.0+L	6.0+L
BRACKET MOUNTED (MAST ARM POLE OR SIGNAL POLE)	13.0	4.0
PEDESTRIAN PUSH BUTTON	6.0	2.0
SERVICE INSTALLATION POLE MOUNT TO SERVICE DROP	13.5	4.1
SERVICE INSTALLATION POLE MOUNT TO GROUND	13.5	4.1
SERVICE INSTALLATION GROUND MOUNT	6.0	2.0
FOUNDATION (SIGNAL POST, MAST ARM POLE, CONTROLLER CABINET, SERVICE-GROUND MOUNT)	3.0	1.0

VERTICAL CABLE LENGTH

FOUNDATION	DEPTH
TYPE A - Signal Post	4'-0" (1.2m)
TYPE C - CONTROLLER W/ UPS	4'-0" (1.2m)
TYPE D - CONTROLLER	4'-0" (1.2m)
SERVICE INSTALLATION, GROUND MOUNT, TYPE A - SQUARE	4'-0" (1.2m)

DEPTH OF FOUNDATION

Mast Arm Length	① Foundation Depth	Foundation Diameter	Spiral Diameter	Quantity of Rebars	Size of Rebars
Less than 30' (9.1 m)	10'-0" (3.0 m)	30" (750mm)	24" (600mm)	8	6(19)
Greater than or equal to 30' (9.1 m) and less than 40' (12.2 m)	13'-6" (4.1 m)	30" (750mm)	24" (600mm)	8	6(19)
	11'-0" (3.4 m)	36" (900mm)	30" (750mm)	12	7(22)
Greater than or equal to 40' (12.2 m) and less than 50' (15.2 m)	13'-0" (4.0 m)	36" (900mm)	30" (750mm)	12	7(22)
Greater than or equal to 50' (15.2 m) and up to 55' (16.8 m)	15'-0" (4.6 m)	36" (900mm)	30" (750mm)	12	7(22)
Greater than or equal to 56' (16.8 m) and less than 65' (19.8 m)	21'-0" (6.4 m)	42" (1060mm)	36" (900mm)	16	8(25)
Greater than or equal to 65' (19.8 m) and up to 75' (22.9 m)	25'-0" (7.6 m)	42" (1060mm)	36" (900mm)	16	8(25)

NOTES:

1. These foundation depths are for sites which have cohesive soils (clayey silt, sandy clay, etc.) along the length of the shaft, with an average Unconfined Compressive Strength (Qu) > 1.0 tsf (100 kpa). This strength shall be verified by boring data prior to construction or with testing by the Engineer during foundation drilling. The Bureau of Bridges & structures should be contacted for a revised design if other conditions are encountered.
2. Combination mast arm assemblies under 55 feet (16.8 m) shall use 36" (900 mm) diameter foundations.
3. Combination mast arm assemblies under 56 feet (16.8 m) through 75 feet (22.9 m) shall use 42" (1060 mm) diameter foundations
4. For mast arm assemblies with dual arms refer to state standard 878001..

DEPTH OF MAST ARM FOUNDATIONS, TYPE E

MODE.: Default
FILE NAME: pw:\\IL084EBIDINTEG.illinois.gov:PWIDOT\Documents\IDOT Offices\District 1\Projects\DistStd22x34\CADData\CADsheets\ts05.dgn

USER NAME = footemj	DESIGNED -	REVISED -
	DRAWN -	REVISED -
PLOT SCALE = 50.0000 ' / in.	CHECKED -	REVISED -
PLOT DATE = 3/4/2019	DATE -	REVISED -

STATE OF ILLINOIS
DEPARTMENT OF TRANSPORTATION

DISTRICT ONE
STANDARD TRAFFIC SIGNAL DESIGN DETAILS

SCALE: NONE | SHEET 5 OF 7 SHEETS | STA. TO STA.

F.A.P. RTE.	SECTION	COUNTY	TOTAL SHEETS	SHEET NO.
342	2018-100-BR	COOK	1211	500
	TS-05	CONTRACT NO. 62W38		
		ILLINOIS FED. AID PROJECT		

ts05.dgn 3/4/2019 11:23:29 AM User:footemj