11-08-2024 LETTING ITEM 106

F.A.U. RTE.	SECTION	COUNTY	TOTAL SHEETS	SHEET NO.
N/A	17-00034-05-BT	COOK	86	1
	ILLINOIS	CONTRACT NO. 61K54		

STATE OF ILLINOIS
DEPARTMENT OF TRANSPORTATION

PROPOSED HIGHWAY PLANS

DES PLAINES RIVER TRAIL SEGMENT 4
IRVING PARK ROAD TO LAWRENCE AVE
BIKE PATH
SECTION NO.: 17-00034-05-BT
PROJECT NO.: OREL(643)
COOK COUNTY FOREST PRESERVE DISTRICT
COOK COUNTY
JOB NO.: C-91-260-24

FOR INDEX OF SHEETS, SEE SHEET NO. 2

FOR LIST OF APPLICABLE HIGHWAY STANDARDS SEE SHEET 2

THIS PROJECT PASSES THROUGH:

CITY OF CHICAGO
VILLAGE OF SCHILLER PARK

TRAFFIC DATA
IRVING PARK ROAD
ADT = 21,400 (2021)
40 MPH POSTED SPEED
OTHER PRINCIPAL ARTERIAL

TO THE BEST OF MY KNOWLEDGE AND BELIEF, THE STORMWATER AND DRAINAGE OF SURFACE WATERS MEET THE MINIMUM CRITERIA FOR STORMWATER MANAGEMENT IN ACCORDANCE WITH LOCAL AND COUNTY STANDARDS.

MARK B. THOMAS, P.E.

Contact the Metropolitan Water Reclamation District of Greater Chicago 2 days before starting work.

P (708) 588-4055
E WMOJobStart@mwrd.org

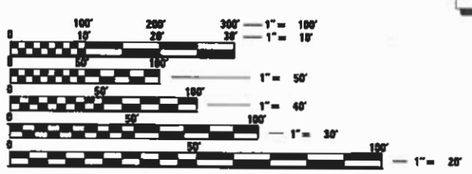

FULL SIZE PLANS HAVE BEEN PREPARED USING STANDARD ENGINEERING SCALES. REDUCED SIZED PLANS WILL NOT CONFORM TO STANDARD SCALES. IN MAKING MEASUREMENTS ON REDUCED PLANS, THE ABOVE SCALES MAY BE USED.

J.U.L.I.E.
JOINT UTILITY LOCATION INFORMATION FOR EXCAVATION
1-800-892-0123
OR 811

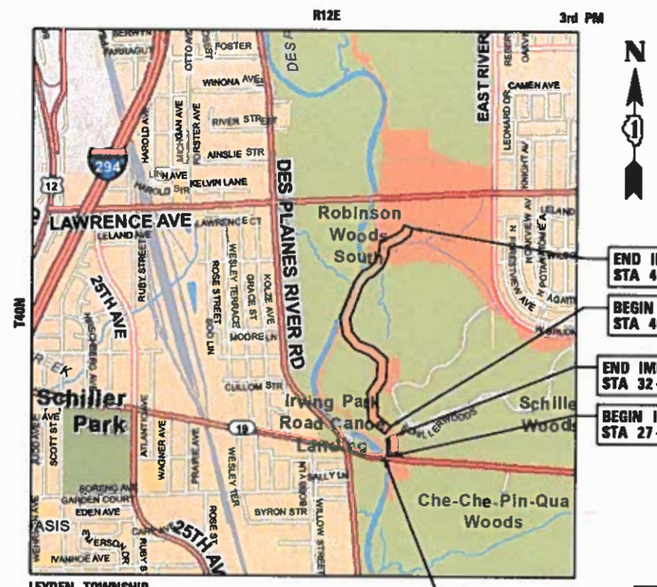

LOCATION MAP
(NOT TO SCALE)

GROSS LENGTH = 5,749 FT. = 1.09 MILE
NET LENGTH = 5,749 FT. = 1.09 MILE

LOCATION OF SECTION INDICATED THUS:-

STATE OF ILLINOIS
DEPARTMENT OF TRANSPORTATION

APPROVED 7/26/2024
DEPUTY DIRECTOR OF PLANNING AND DEVELOPMENT
FOREST PRESERVE DISTRICT OF COOK COUNTY

PASSED Sept 11, 2024
DISTRICT 1 ENGINEER OF LOCAL ROADS AND STREETS

RELEASED FOR BID BASED ON LIMITED REVIEW Sept 11th, 2024
IR
REGIONAL ENGINEER

ENGINEER 7/26/2024 DATE
MARK B. THOMAS
ILLINOIS REGISTRATION No. 062-057218
EXPIRATION DATE: 11/30/2025

CHRISTOPHER B. BURKE ENGINEERING, LTD.
9575 W. Higgins Road, Suite 600
Rosemont, Illinois 60018
(847) 823-0500

PRINTED BY THE AUTHORITY OF THE STATE OF ILLINOIS

FEDERAL AID PROGRAM ENGINEER: CARMEN E. RAMOS, P.E. SCHAUMBURG, ILLINOIS

CONTRACT NO. 61K54

GENERAL NOTES

1. ALL CONSTRUCTION SHALL BE DONE IN ACCORDANCE WITH THE "STANDARD SPECIFICATIONS FOR ROAD AND BRIDGE CONSTRUCTION", ADOPTED JANUARY 1, 2022: THE SUPPLEMENTAL SPECIFICATIONS AND RECURRING SPECIAL PROVISIONS DATED JANUARY 1, 2024, THE LATEST EDITION OF THE "ILLINOIS MANUAL ON UNIFORM TRAFFIC CONTROL DEVICES FOR STREETS AND HIGHWAYS" (IMUTCD), THE "DETAILS" IN THE PLANS, AND THE "SPECIAL PROVISIONS" INCLUDED IN THE CONTRACT DOCUMENTS.

2. IT IS THE CONTRACTOR'S RESPONSIBILITY TO ASCERTAIN EXISTING FIELD CONDITIONS PRIOR TO BIDDING ON THIS PROJECT.

3. THE CONTRACTOR SHALL LIMIT HIS/HER CONSTRUCTION ACTIVITIES TO THE WORK AREAS DESIGNATED ON THE PLANS. ANY DAMAGE TO AREAS OUTSIDE OF THESE LIMITS SHALL BE REPAIRED BY THE CONTRACTOR TO THE SATISFACTION OF THE ENGINEER.

4. THE CONTRACTOR SHALL NOTIFY THE NORTH COOK COUNTY SOIL AND WATER CONSERVATION DISTRICT (224-875-7580) AT LEAST 7 WORKING DAYS PRIOR TO THE ONSET OF CONSTRUCTION.

5. THE CONTRACTOR SHALL GIVE NOTICES AND COMPLY WITH APPLICABLE LAWS, ORDINANCES, RULES, REGULATIONS AND LAWFUL ORDERS OF ALL PUBLIC AUTHORITIES BEARING ON SAFETY OF PERSONS OR PROPERTY OR THEIR PROTECTION FROM DAMAGE, INJURY OR LOSS.

6. GEOTECHNICAL FABRIC FOR GROUND STABILIZATION AND/OR AGGREGATE SUBGRADE IMPROVEMENT (CU YD) HAVE BEEN PROVIDED FOR USE AT THE LOCATIONS INDICATED FOR SOILS THAT TEND TO BE UNSTABLE AND/OR UNSUITABLE. THE ACTUAL NEED FOR REMOVAL AND REPLACEMENT WITH ABOVE ITEM WILL BE DETERMINED IN THE FIELD AT THE TIME OF CONSTRUCTION BY THE GEOTECHNICAL ENGINEER. ALL POTENTIALLY UNSTABLE SOILS SHOULD BE TESTED WITH A STATIC OR DYNAMIC CONE PENETROMETER AND TREATED IN ACCORDANCE WITH ARTICLE 301.04 OF THE SSRBC AND IDOT SUBGRADE STABILITY MANUAL. IF UNSTABLE AND/OR UNSUITABLE SOILS ARE NOT ENCOUNTERED, THEN THE QUANTITY SHALL BE DEDUCTED AND NO ADDITIONAL COMPENSATION WILL BE DUE TO THE CONTRACTOR.

7. THE SUBGRADE STABILITY SHALL BE VERIFIED BY PROOF ROLLING WITH A FULLY LOADED TANDEM-AXLE TRUCK.

8. THE CONTRACTOR SHALL CONTACT KALPANA KANNAN-HOSADURGA, THE DISTRICT ONE TRAFFIC CONTROL SUPERVISOR, AT KALPANA.KANNAN-HOSADURGA@ILLINOIS.GOV A MINIMUM OF 72 HOURS IN ADVANCE OF BEGINNING WORK.

9. **UTILITIES**
   (A) ALL UNDERGROUND UTILITY LOCATIONS, INCLUDING BUT NOT LIMITED TO SANITARY AND STORM SEWERS, WATER MAINS AND THEIR RESPECTIVE SERVICE LINES, SHOWN ON THE PLANS ARE APPROXIMATE ONLY. UNDERGROUND FACILITIES REPRESENTS ONLY THE OPINION OF THE VILLAGE, AS TO THE LOCATION OF SUCH UTILITIES AND IS ONLY INCLUDED FOR THE CONVENIENCE OF THE BIDDER. IT SHALL BE THE CONTRACTOR'S RESPONSIBILITY TO HAVE THE RESPECTIVE UTILITY COMPANIES FIELD LOCATE ALL UTILITIES AS NECESSARY, PRIOR TO STARTING CONSTRUCTION. THE CONTRACTOR SHALL NOTIFY J.U.L.I.E. AT (800) 892-0123, AND ALL PUBLIC AND PRIVATE UTILITIES BEFORE STARTING CONSTRUCTION.

   (B) THE CONTRACTOR SHALL BE RESPONSIBLE FOR THE PROTECTION OF ALL UNDERGROUND OR SURFACE UTILITIES EVEN THOUGH THEY MAY NOT BE SHOWN ON THE PLANS. ANY UTILITY THAT IS DAMAGED DURING CONSTRUCTION SHALL BE REPAIRED OR REPLACED TO THE SATISFACTION OF THE ENGINEER.

10. **STORM SEWER CONSTRUCTION**
    FRAME ELEVATIONS GIVEN ON THE PLANS ARE ONLY TO ASSIST THE CONTRACTOR IN DETERMINING THE APPROXIMATE OVERALL HEIGHT OF THE STRUCTURE. FRAMES OF ALL NEW, ADJUSTED OR RECONSTRUCTED STRUCTURES WILL BE ADJUSTED TO THE FINAL ELEVATION OF THE AREA IN WHICH THEY ARE LOCATED.

11. **SOIL EROSION AND SEDIMENT CONTROL**
    (A) SOIL EROSION AND SEDIMENT CONTROL (SESC) FEATURES MUST BE CONSTRUCTED PRIOR TO THE COMMENCEMENT OF UPLAND DISTURBANCE. SOIL DISTURBANCE MUST BE PHASED OR ENACTED IN SUCH A MANNER AS TO MINIMIZE EROSION. SOIL STABILIZATION MEASURES MUST CONSIDER THE TIME OF YEAR, SITE CONDITIONS AND THE USE OF TEMPORARY AND/OR PERMANENT MEASURES.

    (B) UNLESS OTHERWISE INDICATED, ALL VEGETATIVE AND STRUCTURAL EROSION AND SEDIMENT CONTROL PRACTICES WILL BE INSTALLED AT MINIMUM ACCORDING TO THE STANDARDS AND SPECIFICATIONS IN THE ILLINOIS URBAN MANUAL, REVISED TO LATEST VERSION AS AMENDED. A COPY OF THE APPROVED SOIL EROSION AND SEDIMENT CONTROL (SESC) PLAN AND THE STORM WATER POLLUTION PREVENTION PLAN (SWPPP) MUST BE MAINTAINED ON THE SITE AT ALL TIMES.

    (C) THE EROSION AND SEDIMENT CONTROLS SHOWN ON THE PLANS ARE THE MINIMUM REQUIREMENTS. ADDITIONAL MEASURES MAY BE REQUIRED AS DIRECTED BY THE ENGINEER. ALL ADDITIONAL MEASURES MUST BE IN PLACE WITHIN 3 DAYS OF DISTURBANCE AND ANY EMERGENCY SESC MEASURES MUST BE INSTALLED IMMEDIATELY.

    (D) THE CONTRACTOR MUST CLEAN UP, GRADE THE WORK AREAS AS THE PROJECT PROGRESSES, AND INSTALL TEMPORARY OR PERMANENT EROSION PROTECTION TO CONTROL SOIL EROSION, OR INSTALL APPROPRIATE SEDIMENT CONTROL DEVICES TO TRAP SEDIMENT. PAVEMENT MUST BE CLEANED DAILY OR AS NECESSARY TO REMOVE TRACK-OUT MATERIAL.

    (E) ACCESS TO THE WORK AREA WILL ONLY BE ALLOWED FROM STABILIZED CONSTRUCTION ENTRANCES. ANY SOIL REACHING PUBLIC OR PRIVATE ROADWAYS MUST BE REMOVED IMMEDIATELY.

    (F) DURING DE-WATERING/PUMPING OPERATIONS, ONLY UNCONTAMINATED WATER SHOULD BE ALLOWED TO DISCHARGE TO PROTECTED NATURAL AREAS, WATERS OF THE STATE, OR TO A STORM SEWER SYSTEM (IN ACCORDANCE WITH LOCAL PERMITS). INLET HOSES SHOULD BE FLOATED AT THE SURFACE OF THE WATER IN ORDER TO LIMIT THE AMOUNT OF SEDIMENT INTAKE. PUMPING OPERATIONS MAY BE DISCHARGED TO A STABILIZED AREA THAT CONSISTS OF AN ENERGY DISSIPATING DEVICE (E.G., STONE), SEDIMENT FILTER BAG, OR BOTH. ADEQUATE EROSION AND SEDIMENT CONTROLS SHOULD BE USED DURING DE-WATERING OPERATIONS AS NECESSARY. DEWATERING SEDIMENT LADEN WATER DIRECTLY INTO FIELD TILES, STORM WATER STRUCTURES, OR "WATERS OF THE US" IS PROHIBITED.

    (G) CONSTRUCTION ACTIVITIES MUST BE SCHEDULED TO MINIMIZE THE TIME SOIL IS EXPOSED AND UNPROTECTED. IN NO CASE WILL THE EXISTING VEGETATION BE DESTROYED, REMOVED, OR DISTURBED MORE THAN FOURTEEN (14) DAYS PRIOR TO THE INITIATION OF IMPROVEMENTS.

    (H) ALL DISTURBED SOILS ARE TO BE STABILIZED, TEMPORARILY OR PERMANENTLY, WITHIN SEVEN (7) DAYS OF CONSTRUCTION ACTIVITY HAVING CEASED IF THE SOIL IS TO REMAIN UNDISTURBED FOR MORE THAN FOURTEEN (14) DAYS.

INDEX OF SHEETS

FLOOD CONTROL CERTIFICATION STATEMENT

I hearby certify that the following is true and correct:

1. I am a registered professional engineer in the State of Illinois

2. My license number, issued by the Illinois Department of Financial and Professional Regulation, is 062.057218.

3. I am an engineer work on the development located at the Des Plaines River Trail, Segment 4, between Irving Park Road and Lawrence Avenue.

4. I have reviewed the requirements set forth in Chapter 16-6 of the City of Chicago Municipal Code and the plans for the above referenced development.

5. Pursuant to section 16-6-040(a)(v), I hereby certify that the above referenced development complies with the requirements of Chapter 16-6 of the City of Chicago Municipal Code.

Name: Mark Thomas Date 04/16/2024

HIGHWAY STANDARDS

000001 - 08	STANDARD SYMBOLS, ABBREVIATIONS AND PATTERNS
424001 - 11	PERPENDICULAR CURB RAMPS FOR SIDEWALKS
542301 - 03	PRECAST REINFORCED CONCRETE FLARED END SECTION
601001 - 05	PIPE UNDERDRAINS
601101 - 02	CONCRETE HEADWALL FOR PIPE UNDERDRAINS
606001 - 08	CONCRETE CURB TYPE B AND COMBINATION CONCRETE CURB AND GUTTER
701101 - 05	OFF-RD OPERATIONS, MULTILANE, 15' (4.5 m) TO 24" (600 mm) FROM PAVEMENT EDGE
701426 - 09	LANE CLOSURE, MULTILANE, INTERMITTENT OR MOVING OPER., FOR SPEEDS >=45 MPH
701427 - 05	LANE CLOSURE, MULTILANE, INTERMITTENT OR MOVING OPER., FOR SPEEDS <=45 MPH
701606 - 10	URBAN SINGLE LANE CLOSURE, MULTILANE 2W WITH MOUNTABLE MEDIAN
701801 - 06	SIDEWALK, CORNER OR CROSSWALK CLOSURE
701901 - 09	TRAFFIC CONTROL DEVICES
720001 - 01	SIGN PANEL MOUNTING DETAILS
720006 - 04	SIGN PANEL ERECTION DETAILS
720011 - 01	METAL POSTS FOR SIGNS, MARKERS & DELINEATORS
729001 - 01	APPLICATION OF TYPES A AND B METAL POSTS (FOR SIGNS & MARKERS)

DISTRICT ONE DETAILS

BM-20 PRUNING FOR SAFETY AND EQUIPMENT CLEARANCE

COMMITMENTS

WETLANDS SHALL BE PROTECTED DURING CONSTRUCTION, UTILIZING EROSION CONTROL BARRIER AND HIGH VISIBILITY FENCING.

TREES THREE (3) INCHES IN DIAMETER AT BREAST HEIGHT SHALL NOT BE CLEARED FROM APRIL 1ST THROUGH SEPTEMBER 30TH OF ANY GIVEN YEAR. TREE PRUNING SHALL ALSO NOT OCCUR FROM APRIL 1ST THROUGH SEPTEMBER 30TH.

MWRD GENERAL NOTES

A. REFERENCED SPECIFICATIONS

1. ALL CONSTRUCTION SHALL BE IN ACCORDANCE WITH THE APPLICABLE SECTIONS OF THE FOLLOWING, EXCEPT AS MODIFIED HEREIN OR ON THE PLANS:
   * STANDARD SPECIFICATIONS FOR ROAD AND BRIDGE CONSTRUCTION (JAN 1, 2022), BY THE ILLINOIS DEPARTMENT OF TRANSPORTATION (IDOT SS) FOR ALL IMPROVEMENTS EXCEPT SANITARY SEWER AND WATER MAIN CONSTRUCTION;
   * STANDARD SPECIFICATIONS FOR WATER AND SEWER MAIN CONSTRUCTION IN ILLINOIS, LATEST EDITION (SSWS) FOR SANITARY SEWER AND WATER MAIN CONSTRUCTION;
   * FOREST PRESERVE DISTRICT OF COOK COUNTY MUNICIPAL CODE;
   * THE METROPOLITAN WATER RECLAMATION DISTRICT OF GREATER CHICAGO (MWRD) WATERSHED MANAGEMENT ORDINANCE AND TECHNICAL GUIDANCE MANUAL;
   * IN CASE OF CONFLICT BETWEEN THE APPLICABLE ORDINANCES NOTED, THE MORE STRINGENT SHALL TAKE PRECEDENCE AND SHALL CONTROL ALL CONSTRUCTION.

B. NOTIFICATIONS

1. THE MWRD LOCAL SEWER SYSTEMS SECTION FIELD OFFICE MUST BE NOTIFIED AT LEAST TWO (2) WORKING DAYS PRIOR TO THE COMMENCEMENT OF ANY WORK (CALL 708-588-4055).
2. THE VILLAGE OF SCHILLER PARK PUBLIC WORKS DEPARTMENT AND PUBLIC MUST BE NOTIFIED AT LEAST 24 HOURS PRIOR TO THE START OF CONSTRUCTION AND PRIOR TO EACH PHASE OF WORK. CONTRACTOR SHALL DETERMINE ITEMS REQUIRING INSPECTION PRIOR TO START OF CONSTRUCTION OR EACH WORK PHASE.

C. GENERAL NOTES

1. ALL ELEVATIONS SHOWN ON PLANS REFERENCE THE NORTH AMERICAN VERTICAL DATUM OF 1988 (NAVD88).
2. THE ENGINEER, IN COORDINATION WITH THE MWRD, THE MUNICIPALITY AND THE OWNER OR OWNER'S REPRESENTATIVE SHALL HAVE THE AUTHORITY TO INSPECT, APPROVE, AND REJECT THE CONSTRUCTION IMPROVEMENTS.
3. THE CONTRACTOR(S) SHALL INDEMNIFY THE OWNER, ENGINEER, MUNICIPALITY, MWRD, AND THEIR AGENTS, ETC., FROM ALL LIABILITY INVOLVED WITH THE CONSTRUCTION, INSTALLATION, OR TESTING OF THIS WORK ON THE PROJECT.
4. THE PROPOSED IMPROVEMENTS MUST BE CONSTRUCTED IN ACCORDANCE WITH THE ENGINEERING PLANS AS APPROVED BY MWRD AND THE MUNICIPALITY UNLESS CHANGES ARE APPROVED BY MWRD, THE MUNICIPALITY, OR AUTHORIZED AGENT. THE CONSTRUCTION DETAILS, AS PRESENTED ON THE PLANS, MUST BE FOLLOWED. PROPER CONSTRUCTION TECHNIQUES MUST BE FOLLOWED ON THE IMPROVEMENTS INDICATED ON THE PLANS.
5. THE UNDERGROUND CONTRACTOR SHALL MAKE ALL NECESSARY ARRANGEMENTS TO NOTIFY ALL INSPECTION AGENCIES.
6. ALL NEW AND EXISTING UTILITY STRUCTURES ON SITE AND IN AREAS DISTURBED DURING CONSTRUCTION SHALL BE ADJUSTED TO FINISH GRADE PRIOR TO FINAL INSPECTION.
7. RECORD DRAWINGS SHALL BE KEPT BY THE CONTRACTOR AND SUBMITTED TO THE ENGINEER AS SOON AS UNDERGROUND IMPROVEMENTS ARE COMPLETED. FINAL PAYMENTS TO THE CONTRACTOR SHALL BE HELD UNTIL THEY ARE RECEIVED. ANY CHANGES IN LENGTH, LOCATION OR ALIGNMENT SHALL BE SHOWN IN RED. ALL WYES OR BENDS SHALL BE LOCATED FROM THE DOWNSTREAM MANHOLE. ALL VALVES, B-BOXES, TEES OR BENDS SHALL BE TIED TO A FIRE HYDRANT.

D. SANITARY SEWER

1. THE CONTRACTOR SHALL TAKE MEASURES TO PREVENT ANY POLLUTED WATER, SUCH AS GROUND AND SURFACE WATER, FROM ENTERING THE EXISTING SANITARY SEWERS.
2. A WATER-TIGHT PLUG SHALL BE INSTALLED IN THE DOWNSTREAM SEWER PIPE AT THE POINT OF SEWER CONNECTION PRIOR TO COMMENCING ANY SEWER CONSTRUCTION. THE PLUG SHALL REMAIN IN PLACE UNTIL REMOVAL IS AUTHORIZED BY THE MUNICIPALITY AND/OR MWRD AFTER THE SEWERS HAVE BEEN TESTED AND ACCEPTED.
3. DISCHARGING ANY UNPOLLUTED WATER INTO THE SANITARY SEWER SYSTEM FOR THE PURPOSE OF SEWER FLUSHING OF LINES FOR THE DEFLECTION TEST SHALL BE PROHIBITED WITHOUT PRIOR APPROVAL FROM THE ENGINEER IN COORDINATION WITH SCHILLER PARK AND/OR MWRD.
4. ALL SANITARY SEWER CONSTRUCTION SHALL BE IN ACCORDANCE WITH THE STANDARD SPECIFICATIONS FOR WATER AND SEWER MAIN CONSTRUCTION IN ILLINOIS (LATEST EDITION).
5. ALL FLOOR DRAINS SHALL DISCHARGE TO THE SANITARY SEWER SYSTEM.
6. ALL DOWNSPOUTS AND FOOTING DRAINS SHALL DISCHARGE TO THE STORM SEWER SYSTEM.
7. ALL SANITARY SEWER PIPE MATERIALS AND JOINTS (AND STORM SEWER PIPE MATERIALS AND JOINTS IN A COMBINED SEWER AREA) SHALL CONFORM TO THE FOLLOWING:

PIPE MATERIAL	PIPE SPECS	JOINT SPECS
VITRIFIED CLAY PIPE	ASTM C-700	ASTM C-425
REINFORCED CONCRETE SEWER PIPE	ASTM C-76	ASTM C-443
CAST IRON SOIL PIPE	ASTM A-74	ASTM C-564
DUCTILE IRON PIPE	AANSI A21.51	ANSI A21.11
POLYVINYL CHLORIDE (PVC) PIPE		
6-INCH TO 15-INCH DIAMETER SDR 26	ASTM D-3034	ASTM D-3212
18-INCH TO 27-INCH DIAMETER F/DY=46	ASTM F-679	ASTM D-3212
HIGH DENSITY POLYETHYLENE (HDPE)	ASTM D-3350	ASTM D-3261, F-2620 (HEAT FUSION)
	ASTM-3035	ASTM D-3212, F-477 (GASKETED)
WATER MAIN QUALITY PVC		
4-INCH TO 36-INCH	ASTM D-2241	ASTM D-3139
4-INCH TO 12-INCH	AWWA C900	ASTM D-3139
14-INCH TO 48-INCH	AWWA C905	ASTM D-3139

THE FOLLOWING MATERIALS ARE ALLOWED ON A QUALIFIED BASIS SUBJECT TO DISTRICT REVIEW AND APPROVAL PRIOR TO PERMIT ISSUANCE. A SPECIAL CONDITION WILL BE ADDED TO THE PERMIT WHEN THE PIPE MATERIAL BELOW IS USED FOR SEWER CONSTRUCTION OR A CONNECTION IS MADE.

PIPE MATERIAL	PIPE SPECS	JOINT SPECS
POLYPROPYLENE (PP) PIPE		
12-INCH TO 24-INCH DOUBLE WALL	ASTM F-2736	D-3212, F-477
30 INCH TO 60-INCH TRIPLE WALL	ASTM F-2764	D3212, F-477

8. ALL SANITARY SEWER CONSTRUCTION (AND STORM SEWER CONSTRUCTION IN COMBINED SEWER AREAS), REQUIRES STONE BEDDING WITH STONE ¼" TO 1" IN SIZE, WITH MINIMUM BEDDING THICKNESS EQUAL TO ¼ THE OUTSIDE DIAMETER OF THE SEWER PIPE, BUT NOT LESS THAN FOUR (4) INCHES NOR MORE THAN EIGHT (8) INCHES. MATERIAL SHALL BE CA-7, CA-11 OR CA-13 AND SHALL BE EXTENDED AT LEAST 12" ABOVE THE TOP OF THE PIPE WHEN USING PVC.
9. NON-SHEAR FLEXIBLE-TYPE COUPLINGS SHALL BE USED IN THE CONNECTION OF SEWER PIPES OF DISSIMILAR PIPE MATERIALS.
10. ALL MANHOLES SHALL BE PROVIDED WITH BOLTED, WATERTIGHT COVERS. SANITARY LIDS SHALL BE CONSTRUCTED WITH A CONCEALED PICKHOLE AND WATERTIGHT GASKET WITH THE WORD "SANITARY" CAST INTO THE LID.
11. WHEN CONNECTING TO AN EXISTING SEWER MAIN BY MEANS OTHER THAN AN EXISTING WYE, TEE, OR AN EXISTING MANHOLE, ONE OF THE FOLLOWING METHODS SHALL BE USED:
    a. A CIRCULAR SAW-CUT OF SEWER MAIN BY PROPER TOOLS AND PROPER INSTALLATION OF HUBWYE SADDLE OR HUB-TEE SADDLE.
    b. REMOVE AN ENTIRE SECTION OF PIPE (BREAKING ONLY THE TOP OF ONE BELL) AND REPLACE WITH A WYE OR TEE BRANCH SECTION.
    c. WITH PIPE CUTTER, NEATLY AND ACCURATELY CUT OUT DESIRED LENGTH OF PIPE FOR INSERTION OF PROPER FITTING, USING COUPLINGS TO HOLD IT FIRMLY IN PLACE.
12. WHENEVER A SANITARY/COMBINED SEWER CROSSES UNDER A WATERMAIN, THE MINIMUM VERTICAL DISTANCE FROM THE TOP OF THE SEWER TO THE BOTTOM OF THE WATERMAIN SHALL BE 18 INCHES. FURTHERMORE, A MINIMUM HORIZONTAL DISTANCE OF 10 FEET BETWEEN SANITARY/COMBINED SEWERS AND WATERMAINS SHALL BE MAINTAINED UNLESS: THE SEWER IS LAID IN A SEPARATE TRENCH, KEEPING A MINIMUM 18" VERTICAL SEPARATION; OR THE SEWER IS LAID IN THE SAME TRENCH WITH THE WATERMAIN LOCATED AT THE OPPOSITE SIDE ON A BENCH OF UNDISTURBED EARTH, KEEPING A MINIMUM 18" VERTICAL SEPARATION. IF EITHER THE VERTICAL OR HORIZONTAL DISTANCES DESCRIBED CANNOT BE MAINTAINED, OR THE SEWER CROSSES ABOVE THE WATER MAIN, THE SEWER SHALL BE CONSTRUCTED TO WATER MAIN STANDARDS OR IT SHALL BE ENCASED WITH A WATER MAIN QUALITY CARRIER PIPE WITH THE ENDS SEALED.
13. ALL EXISTING SEPTIC SYSTEMS SHALL BE ABANDONED. ABANDONED TANKS SHALL BE FILLED WITH GRANULAR MATERIAL OR REMOVED.
14. ALL SANITARY MANHOLES, (AND STORM MANHOLES IN COMBINED SEWER AREAS), SHALL HAVE A MINIMUM INSIDE DIAMETER OF 48 INCHES, AND SHALL BE CAST IN PLACE OR PRE-CAST REINFORCED CONCRETE.
15. ALL SANITARY MANHOLES, (AND STORM MANHOLES IN COMBINED SEWER AREAS), SHALL HAVE PRECAST "RUBBER BOOTS" THAT CONFORM TO ASTM C-923 FOR ALL PIPE CONNECTIONS. PRECAST SECTIONS SHALL CONSIST OF MODIFIED GROOVE TONGUE AND RUBBER GASKET TYPE JOINTS.
16. ALL ABANDONED SANITARY SEWERS SHALL BE PLUGGED AT BOTH ENDS WITH AT LEAST 2 FEET LONG NON-SHRINK CONCRETE OR MORTAR PLUG.
17. EXCEPT FOR FOUNDATION/FOOTING DRAINS PROVIDED TO PROTECT BUILDINGS, OR PERFORATED PIPES ASSOCIATED WITH VOLUME CONTROL FACILITIES, DRAIN TILES/FIELD TILES/UNDERDRAINS/PERFORATED PIPES ARE NOT ALLOWED TO BE CONNECTED TO OR TRIBUTARY TO COMBINED SEWERS, SANITARY SEWERS, OR STORM SEWERS TRIBUTARY TO COMBINED SEWERS IN COMBINED SEWER AREAS. CONSTRUCTION OF NEW FACILITIES OF THIS TYPE IS PROHIBITED; AND ALL EXISTING DRAIN TILES AND PERFORATED PIPES ENCOUNTERED WITHIN THE PROJECT AREA SHALL BE PLUGGED OR REMOVED, AND SHALL NOT BE CONNECTED TO COMBINED SEWERS, SANITARY SEWERS, OR STORM SEWERS TRIBUTARY TO COMBINED SEWERS.
18. A BACKFLOW PREVENTER IS REQUIRED FOR ALL DETENTION BASINS TRIBUTARY TO COMBINED SEWERS. REQUIRED BACKFLOW PREVENTERS SHALL BE INSPECTED AND EXERCISED ANNUALLY BY THE PROPERTY OWNER TO ENSURE PROPER OPERATION, AND ANY NECESSARY MAINTENANCES SHALL BE PERFORMED TO ENSURE FUNCTIONALITY. IN THE EVENT OF A SEWER SURCHARGE INTO AN OPEN DETENTION BASIN TRIBUTARY TO COMBINED SEWERS, THE PERMITTEE SHALL ENSURE THAT CLEAN UP AND WASH OUT OF SEWAGE TAKES PLACE WITHIN 48 HOURS OF THE STORM EVENT.

E. SOIL EROSION AND SEDIMENT CONTROL PLAN

1. CONTRACTOR SHALL INSTALL INLET PROTECTION FOR ALL STRUCTURES WITHIN THE PROPSOED LIMITS OF DISTURBANCE.
2. THE CONTRACTOR SHALL INSTALL THE EROSION AND SEDIMENT CONTROL DEVICES AS SHOWN ON THE APPROVED EROSION AND SEDIMENT CONTROL PLAN.
3. EROSION AND SEDIMENT CONTROL PRACTICES SHALL BE FUNCTIONAL PRIOR TO HYDROLOGIC DISTURBANCE OF THE SITE.
4. ALL DESIGN CRITERIA, SPECIFICATIONS, AND INSTALLATION OF EROSION AND SEDIMENT CONTROL PRACTICES SHALL BE IN ACCORDANCE WITH THE ILLINOIS URBAN MANUAL.
5. A COPY OF THE APPROVED EROSION AND SEDIMENT CONTROL PLAN SHALL BE MAINTAINED ON THE SITE AT ALL TIMES.
6. INSPECTIONS AND DOCUMENTATION SHALL BE PERFORMED, AT A MINIMUM:
    a. UPON COMPLETION OF INITIAL EROSION AND SEDIMENT CONTROL MEASURES, PRIOR TO ANY SOIL DISTURBANCE.
    b. ONCE EVERY SEVEN (7) CALENDAR DAYS AND WITHIN 24 HOURS OF THE END OF A STORM EVENT WITH GREATER THAN 0.5 INCH OF RAINFALL OR LIQUID EQUIVALENT PRECIPITATION.
7. SOIL DISTURBANCE SHALL BE CONDUCTED IN SUCH A MANNER AS TO MINIMIZE EROSION. IF STRIPPING, CLEARING, GRADING, OR LANDSCAPING ARE TO BE DONE IN PHASES, THE CO-PERMITTEE SHALL PLAN FOR APPROPRIATE SOIL EROSION AND SEDIMENT CONTROL MEASURES.
8. A STABILIZED MAT OF CRUSHED STONE MEETING THE STANDARDS OF THE ILLINOIS URBAN MANUAL SHALL BE INSTALLED AT ANY POINT WHERE TRAFFIC WILL BE ENTERING OR LEAVING A CONSTRUCTION SITE. SEDIMENT OR SOIL REACHING AN IMPROVED PUBLIC RIGHT-OF-WAY, STREET, ALLEY OR PARKING AREA SHALL BE REMOVED BY SCRAPING OR STREET CLEANING AS ACCUMULATIONS WARRANT AND TRANSPORTED TO A CONTROLLED SEDIMENT DISPOSAL AREA.
9. CONCRETE WASHOUT FACILITIES SHALL BE CONSTRUCTED IN ACCORDANCE WITH THE ILLINOIS URBAN MANUAL AND SHALL BE INSTALLED PRIOR TO ANY ON SITE CONSTRUCTION ACTIVITIES INVOLVING CONCRETE.
10. MORTAR WASHOUT FACILITIES SHALL BE CONSTRUCTED IN ADDITION TO CONCRETE WASHOUT FACILITIES FOR ANY BRICK AND MORTAR BUILDING ENVELOPE CONSTRUCTION ACTIVITIES.
11. TEMPORARY DIVERSIONS SHALL BE CONSTRUCTED AS NECESSARY TO DIRECT ALL RUNOFF FROM HYDROLOGICALLY DISTURBED AREAS TO AN APPROPRIATE SEDIMENT TRAP OR BASIN. VOLUME CONTROL FACILITIES SHALL NOT BE USED AS TEMPORARY SEDIMENT BASINS.
12. DISTURBED AREAS OF THE SITE WHERE CONSTRUCTION ACTIVITIES HAVE TEMPORARILY OR PERMANENTLY CEASED SHALL BE STABILIZED WITH TEMPORARY OR PERMANENT MEASURES WITHIN SEVEN (7) DAYS.
13. ALL FLOOD PROTECTION AREAS AND VOLUME CONTROL FACILITIES SHALL, AT A MINIMUM, BE PROTECTED WITH A DOUBLE-ROW OF SILT FENCE (OR EQUIVALENT).
14. VOLUME CONTROL FACILITIES SHALL NOT BE CONSTRUCTED UNTIL ALL OF THE CONTRIBUTING DRAINAGE AREA HAS BEEN STABILIZED.
15. SOIL STOCKPILES SHALL, AT A MINIMUM, BE PROTECTED WITH PERIMETER SEDIMENT CONTROLS. SOIL STOCKPILES SHALL NOT BE PLACED IN FLOOD PROTECTION AREAS OR THEIR BUFFERS.
16. EARTHEN EMBANKMENT SIDE SLOPES SHALL BE STABILIZED WITH APPROPRIATE EROSION CONTROL BLANKET.
17. STORM SEWERS THAT ARE OR WILL BE FUNCTIONING DURING CONSTRUCTION SHALL BE PROTECTED BY APPROPRIATE SEDIMENT *CONTROL MEASURES*.
18. THE CONTRACTOR SHALL EITHER REMOVE OR REPLACE ANY EXISTING DRAIN TILES AND INCORPORATE THEM INTO THE DRAINAGE PLAN FOR THE DEVELOPMENT. DRAIN TILES CANNOT BE TRIBUTARY TO A SANITARY OR COMBINED SEWER. DRAIN TILES ALLOWED IN COMBINED SEWER AREA FOR GREEN INFRASTRUCTURE PRACTICES.
19. IF DEWATERING SERVICES ARE USED, ADJOINING PROPERTIES AND DISCHARGE LOCATIONS SHALL BE PROTECTED FROM EROSION AND SEDIMENTATION. DEWATERING SYSTEMS SHOULD BE INSPECTED DAILY DURING OPERATIONAL PERIODS. THE SITE INSPECTOR MUST BE PRESENT AT THE COMMENCEMENT OF DEWATERING ACTIVITIES.
20. THE CONTRCTOR SHALL BE RESPONSIBLE FOR TRENCH DEWATERING AND EXCAVATION FOR THE INSTALLATION OF SANITARY SEWERS, STORM SEWERS, WATERMAINS AS WELL AS THEIR SERVICES AND OTHER APPURTENANCES. ANY TRENCH DEWATERING, WHICH CONTAINS SEDIMENT SHALL PASS THROUGH A SEDIMENT SETTLING POND OR EQUALLY EFFECTIVE SEDIMENT CONTROL DEVICE. ALTERNATIVES MAY INCLUDE DEWATERING INTO A SUMP PIT, FILTER BAG OR EXISTING VEGETATED UPSLOPE AREA. SEDIMENT LADEN WATERS SHALL NOT BE DISCHARGE TO WATERWAYS, FLOOD PROTECTION AREAS OR THE COMBINED SEWER SYSTEM.
21. ALL PERMANENT EROSION CONTROL PRACTICES SHALL BE INITIATED WITHIN SEVEN (7) DAYS FOLLOWING THE COMPLETION OF SOIL DISTURBING ACTIVITIES.
22. ALL EROSION AND SEDIMENT CONTROL MEASURES SHALL BE MAINTAINED AND REPAIRED AS NEEDED ON A YEAR-ROUND BASIS DURING CONSTRUCTION AND ANY PERIODS OF CONSTRUCTION SHUTDOWN UNTIL PERMANENT STABILIZATION IS ACHIEVED.
23. ALL TEMPORARY EROSION AND SEDIMENT CONTROL MEASURES SHALL BE REMOVED WITHIN THIRTY (30) DAYS AFTER PERMANENT SITE STABILIZATION.
24. THE EROSION AND SEDIMENT CONTROL MEASURES SHOWN ON THE PLANS ARE THE MINIMUM REQUIREMENTS. ADDITIONAL MEASURES MAY BE REQUIRED, AS DIRECTED BY THE ENGINEER, SITE INSPECTOR, OR MWRD.

SPECIALTY	CODED PAY ITEM N0.	ITEM	UNIT	TOTAL QUANTITY	FACILITIES FOR BICYCLE/PEDESTRIAN TRAILS 0028 URBAN	TRAINEES 0042 URBAN
Δ	20100110	TREE REMOVAL (6 TO 15 UNITS DIAMETER)	UNIT	530	530	
Δ	20100210	TREE REMOVAL (OVER 15 UNITS DIAMETER)	UNIT	592	592	
	20101000	TEMPORARY FENCE	FOOT	1290	1290	
	20101100	TREE TRUNK PROTECTION	EACH	15	15	
Δ	20101300	TREE PRUNING (1 TO 10 INCH DIAMETER)	EACH	40	40	
Δ	20101350	TREE PRUNING (OVER 10 INCH DIAMETER)	EACH	30	30	
	20101700	SUPPLEMENTAL WATERING	UNIT	10	10	
	20200100	EARTH EXCAVATION	CU YD	623	623	
	20201200	REMOVAL AND DISPOSAL OF UNSUITABLE MATERIAL	CU YD	1574	1574	
	20400800	FURNISHED EXCAVATION	CU YD	680	680	
	20800150	TRENCH BACKFILL	CU YD	4	4	
	21001000	GEOTECHNICAL FABRIC FOR GROUND STABILIZATION	SQ YD	13761	13761	
	21101600	TOPSOIL FURNISH AND PLACE, VARIABLE DEPTH	SQ YD	5219	5219	
	21301084	EXPLORATION TRENCH 84" DEPTH	FOOT	20	20	
Δ	25000115	SEEDING, CLASS 1B	ACRE	0.75	0.75	
Δ	25000312	SEEDING, CLASS 4A	ACRE	1.5	1.5	

SPECIALTY	CODED PAY ITEM N0.	ITEM	UNIT	TOTAL QUANTITY	FACILITIES FOR BICYCLE/PEDESTRIAN TRAILS 0028 URBAN	TRAINEES 0042 URBAN
Δ	25000314	SEEDING, CLASS 4B	ACRE	0.25	0.25	
	28000250	TEMPORARY EROSION CONTROL SEEDING	POUND	67	67	
	28000400	PERIMETER EROSION BARRIER	FOOT	12810	12810	
	28001100	TEMPORARY EROSION CONTROL BLANKET	SQ YD	3205	3205	
	28100105	STONE RIPRAP, CLASS A3	SQ YD	20	20	
	28200200	FILTER FABRIC	SQ YD	20	20	
	30300001	AGGREGATE SUBGRADE IMPROVEMENT	CU YD	100	100	
	31101100	SUBBASE GRANULAR MATERIAL, TYPE B	CU YD	490	490	
	31101400	SUBBASE GRANULAR MATERIAL, TYPE B 6"	SQ YD	6243	6243	
	35101400	AGGREGATE BASE COURSE, TYPE B	TON	10	10	
	35101598	AGGREGATE BASE COURSE, TYPE B 3"	SQ YD	6641	6641	
	35101600	AGGREGATE BASE COURSE, TYPE B 4"	SQ YD	223	223	
	35800100	PREPARATION OF BASE	SQ YD	3425	3425	
	35800200	AGGREGATE BASE REPAIR	TON	223	223	
	40600275	BITUMINOUS MATERIALS (PRIME COAT)	POUND	2723	2723	
	40604060	HOT-MIX ASPHALT SURFACE COURSE, IL-9.5, MIX "D", N50	TON	576	576	

SPECIALTY	CODED PAY ITEM N0.	ITEM	UNIT	TOTAL QUANTITY	FACILITIES FOR BICYCLE/PEDESTRIAN TRAILS 0028 URBAN	TRAINEES 0042 URBAN
	42400200	PORTLAND CEMENT CONCRETE SIDEWALK 5 INCH	SQ FT	2002	2002	
	42400800	DETECTABLE WARNINGS	SQ FT	40	40	
	44000100	PAVEMENT REMOVAL	SQ YD	5450	5450	
	44000300	CURB REMOVAL	FOOT	28	28	
	44000600	SIDEWALK REMOVAL	SQ FT	1649	1649	
	50105220	PIPE CULVERT REMOVAL	FOOT	45	45	
	50200100	STRUCTURE EXCAVATION	CU YD	70	70	
	50301350	CONCRETE SUPERSTRUCTURE (APPROACH SLAB)	CU YD	20	20	
	50800205	REINFORCEMENT BARS, EPOXY COATED	POUND	2400	2400	
	54213660	PRECAST REINFORCED CONCRETE FLARED END SECTIONS 15"	EACH	6	6	
	60100060	CONCRETE HEADWALLS FOR PIPE DRAINS	EACH	3	3	
	60108206	PIPE UNDERDRAINS, TYPE 2, 6"	FOOT	171	171	
	60600605	CONCRETE CURB, TYPE B	FOOT	28	28	
Δ	66900200	NON-SPECIAL WASTE DISPOSAL	CU YD	5	5	
Δ	66900530	SOIL DISPOSAL ANALYSIS	EACH	1	1	
Δ	66901001	REGULATED SUBSTANCES PRE-CONSTRUCTION PLAN	L SUM	1	1	

SPECIALTY	CODED PAY ITEM N0.	ITEM	UNIT	TOTAL QUANTITY	FACILITIES FOR BICYCLE/PEDESTRIAN TRAILS 0028 URBAN	TRAINEES 0042 URBAN
Δ	66901003	REGULATED SUBSTANCES FINAL CONSTRUCTION REPORT	L SUM	1	1	
Δ	66901006	REGULATED SUBSTANCES MONITORING	CAL DA	1	1	
	67100100	MOBILIZATION	L SUM	1	1	
	67201000	SEALING ABANDONED WATER WELLS	EACH	2	2	
Δ	72000100	SIGN PANEL - TYPE 1	SQ FT	33	33	
	72400310	REMOVE SIGN PANEL - TYPE 1	SQ FT	4	4	
Δ	72900100	METAL POST - TYPE A	FOOT	149	149	
Δ	78000100	THERMOPLASTIC PAVEMENT MARKING - LETTERS AND SYMBOLS	SQ FT	19	19	
Δ	78000200	THERMOPLASTIC PAVEMENT MARKING - LINE 4"	FOOT	1635	1635	
Δ	A2002516	TREE, CARPINUS CAROLINIANA (AMERICAN HORNBEAM), 2" CALIPER, BALLED AND BURLAPPED	EACH	6	6	
Δ	B2010016	TREE, AMELANCHIER CANADENSIS (SHADBLOW SERVICEBERRY), 2" CALIPER, TREE FORM, BALLED AND BURLA	EACH	5	5	
Δ	C2012760	SHRUB, VIBURNUM PRUNIFOLIUM (BLACKHAW VIBURNUM), 5' HEIGHT, BALLED AND BURLAPPED	EACH	17	17	
Δ	K0013060	PERENNIAL PLANTS, SEDGE MEADOW TYPE, 2" DIAMETER BY 4" DEEP PLUG	UNIT	0.38	0.38	
	X0300019	REMOVE AND REINSTALL PARKING BLOCKS	EACH	10	10	
	X0321158	PARK BENCHES	EACH	4	4	
	X0326806	WASHOUT BASIN	L SUM	1	1	

SPECIALTY	CODED PAY ITEM NO.	ITEM	UNIT	TOTAL QUANTITY	FACILITIES FOR BICYCLE/PEDESTRIAN TRAILS 0028 URBAN	TRAINEES 0042 URBAN
	X2010512	CLEARING AND GRUBBING	SQ YD	1011	1011	
	X2011001	HIGH VISIBILITY TEMPORARY FENCING	FOOT	560	560	
	X2110100	TOPSOIL FURNISH AND PLACE (SPECIAL)	CU YD	334	334	
Δ	X2511630	EROSION CONTROL BLANKET (SPECIAL)	SQ YD	10446	10446	
	X2800400	PERIMETER EROSION BARRIER (SPECIAL)	FOOT	1690	1690	
Δ	X5220096	TIMBER RETAINING WALL	SQ FT	16	16	
	X5427602	REMOVE EXISTING FLARED END SECTION	EACH	1	1	
Δ	X6640624	RUSTIC RAIL FENCE	FOOT	100	100	
	X7010216	TRAFFIC CONTROL AND PROTECTION, (SPECIAL)	L SUM	1	1	
	XX004568	TEMPORARY ACCESS ROAD	L SUM	1	1	
	XX007037	SAFETY FENCE	FOOT	48	48	
	XX008287	BOARDWALK STRUCTURE	SQ FT	9805	9805	
	XX008310	AGGREGATE SURFACE COURSE, TYPE B 3" (SPECIAL)	SQ YD	5811	5811	
	XX008533	STORM SEWER, DUCTILE IRON, 16"	FOOT	62	62	
Δ	XX009529	TREE ROOT PRESERVATION	SQ YD	300	300	
Δ	XX009531	TREE ROOT PRUNING (SPECIAL)	FOOT	8787	8787	

SPECIALTY	CODED PAY ITEM N0.	ITEM	UNIT	TOTAL QUANTITY	FACILITIES FOR BICYCLE/PEDESTRIAN TRAILS 0028 URBAN	TRAINEES 0042 URBAN
	Z0000100	ABANDON EXISTING CULVERT	EACH	1	1	
	Z0003855	BICYCLE RACKS	EACH	2	2	
	Z0013797	STABILIZED CONSTRUCTION ENTRANCE	SQ YD	102	102	
	Z0013798	CONSTRUCTION LAYOUT	L SUM	1	1	
	Z0015500	DEBRIS REMOVAL	L SUM	1	1	
	Z0030850	TEMPORARY INFORMATION SIGNING	SQ FT	52	52	
	Z0076600	TRAINEES	HOUR	500		500
	Z0076604	TRAINEES TRAINING PROGRAM GRADUATE	HOUR	500		500

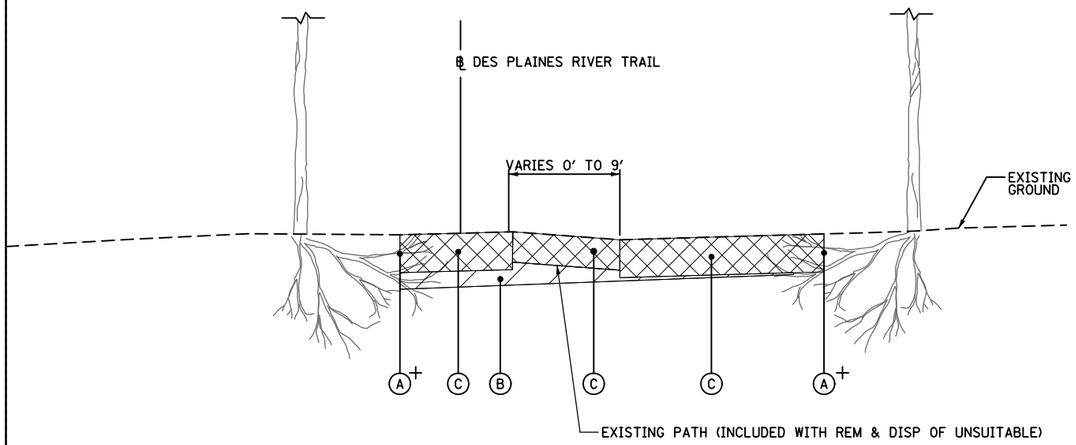

EXISTING TYPICAL SECTION

STA 406+05.13 TO STA 417+80
STA 418+60 TO STA 431+55
STA 440+00 TO STA 443+01
STA 448+82 TO STA 458+65.50

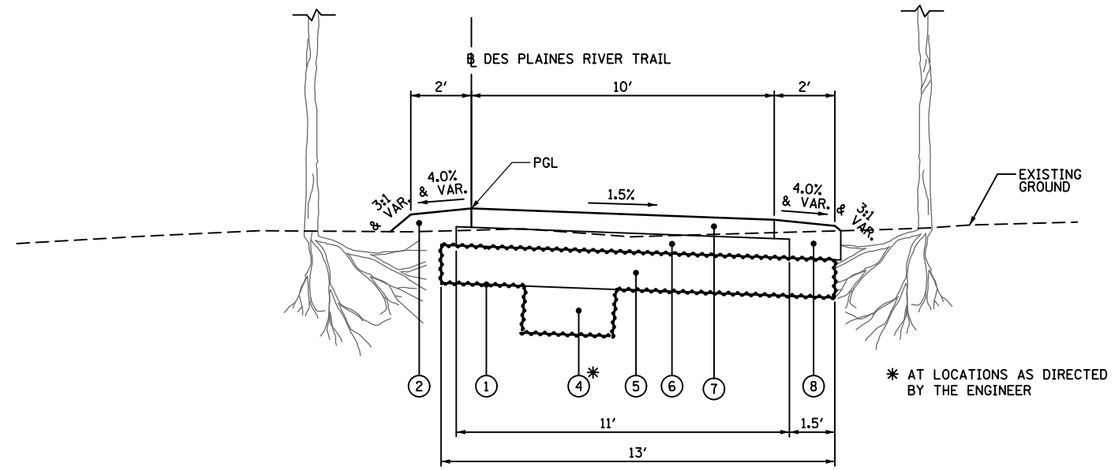

PROPOSED TYPICAL SECTION
STA 448+82 TO STA 458+65.50

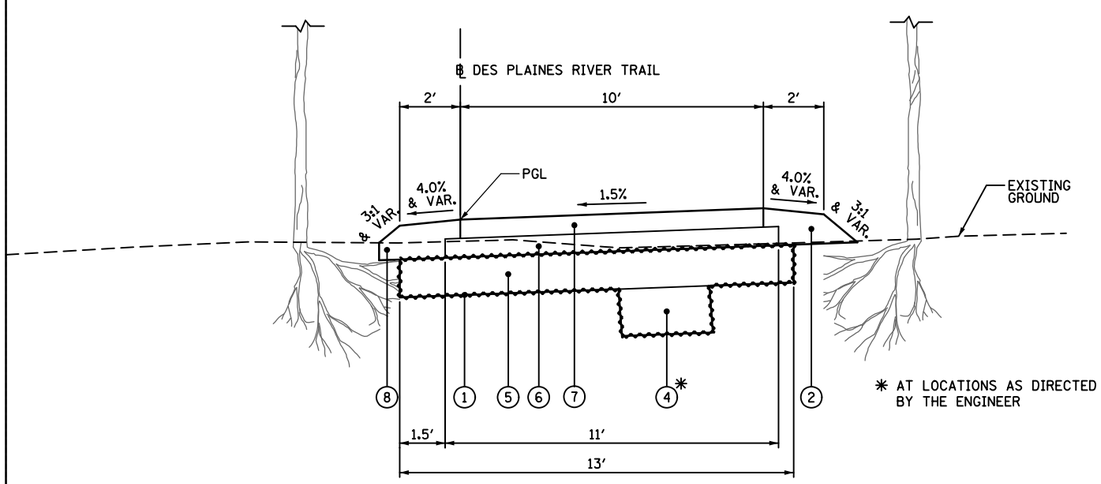

PROPOSED TYPICAL SECTION
STA 406+05.13 TO STA 417+80
STA 418+60 TO STA 431+55
STA 440+00 TO STA 443+01

LEGEND

- (A) TREE ROOT PRUNING (SPECIAL)
- (B) EARTH EXCAVATION (20200100)
- (C) REMOVAL AND DISPOSAL OF UNSUITABLE MATERIAL (20201200)
- (1) GEOTECHNICAL FABRIC FOR GROUND STABILIZATION (21001000)
- (2) TOPSOIL FURNISH AND PLACE, VARIABLE DEPTH (211061600) (4" MIN.)
- (3) NOT USED
- (4) REMOVAL AND DISPOSAL OF UNSUITABLE MATERIAL (20201200) AND AGGREGATE SUBGRADE IMPROVEMENT (30300011)
- (5) SUBBASE GRANULAR MATERIAL, TYPE B 6" (31101400) •
- (6) AGGREGATE BASE COURSE, TYPE B 3" (35101598)
- (7) AGGREGATE SURFACE COURSE, TYPE B 3" (SPECIAL) (XX008310)
- (8) TOPSOIL FURNISH AND PLACE, SPECIAL (X2110100) ••
- (9) SUBBASE GRANULAR MATERIAL, TYPE B (31101100) •

• SEE SPECIAL PROVISIONS FOR COARSE AGGREGATE REQUIREMENTS FOR SUBBASE GRANULAR MATERIAL, TYPE B.

•• TOPSOIL FURNISH AND PLACE, SPECIAL TO BE PLACED ON THE LOW SIDE OF THE PROPOSED PATH EXCEPT FOR THE NO EXCAVATION AREAS AND THE IRVING PARK ROAD CONNECTOR TRAIL.

FILE NAME =	USER NAME = mthomas	DESIGNED -	REVISED -
N:\SCHILLERPARK\230454\Civil\TYP_230454.01.SHT		DRAWN -	REVISED -
	PLOT SCALE = 5'	CHECKED -	REVISED -
Default	PLOT DATE = 9/6/2024	DATE -	REVISED -

STATE OF ILLINOIS
DEPARTMENT OF TRANSPORTATION

DES PLAINES RIVER TRAIL – SEGMENT 4

TYPICAL SECTIONS

SCALE: 1:5 | SHEET OF SHEETS | STA. TO STA.

F.A. RTE.	SECTION	COUNTY	TOTAL SHEETS	SHEET NO.
N/A	17-00034-05-BT	COOK	86	10

CONTRACT NO. 61K54

ILLINOIS FED. AID PROJECT

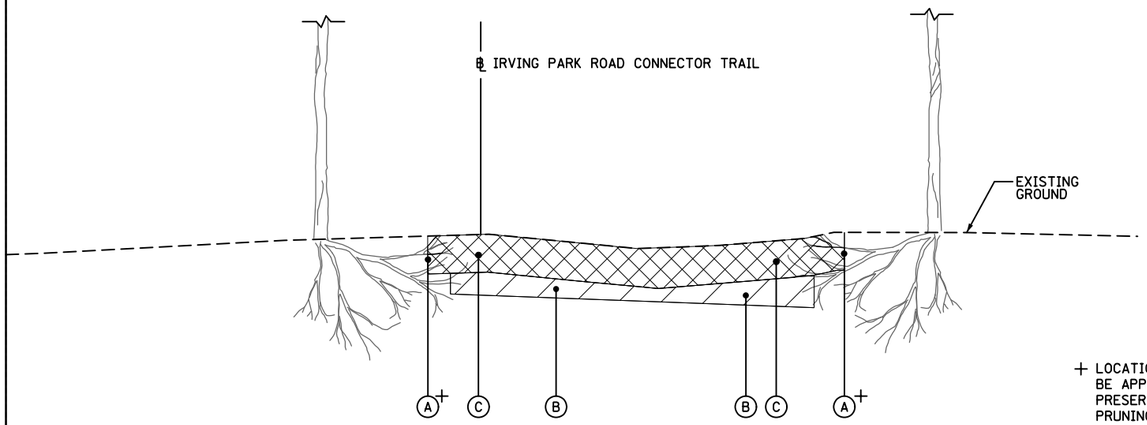

+ LOCATIONS OF ROOT PRUNING TO BE APPROVED BY THE FOREST PRESERVE PRIOR TO BEGINNING PRUNING.

EXISTING TYPICAL SECTION
STA 27+91.47 TO STA 32+79.09

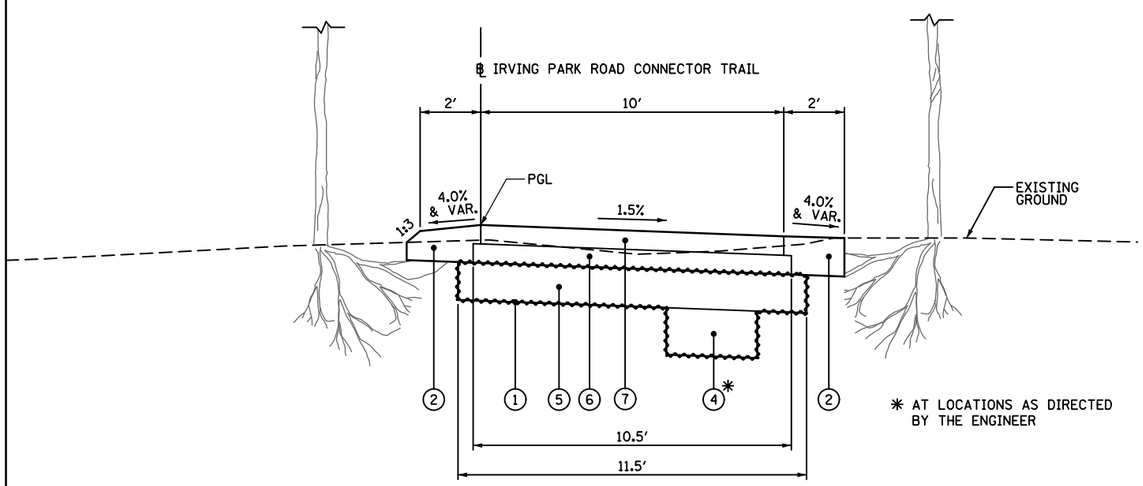

* AT LOCATIONS AS DIRECTED BY THE ENGINEER

PROPOSED TYPICAL SECTION
STA 27+91.47 TO STA 32+79.09

HOT-MIX ASPHALT MIXTURE REQUIREMENTS		
MIXTURE TYPE	AIR VOIDS @NDES	QMP
PARKING LOT RESURFACING HOT-MIX ASPHALT SURFACE COURSE, IL-9.5, MIX "D", N50 3" (IN 2 LIFTS)	4% @ 50 GYR.	LR-1030-2
QMP DESIGNATION: QUALITY CONTROL/QUALITY ASSURANCE (QC/QA) PER LR 1030-2		

THE UNIT WEIGHT USED TO CALCULATE ALL HOT-MIX ASPHALT SURFACE MIXTURES IS 112 LBS/SQYD/IN.

THE "AC TYPE" FOR POLYMERIZED HMA MIXES SHALL BE "SBS/SBR PG 76-22" AND FOR NON-POLYMERIZED HMA THE "AC TYPE" SHALL BE "PG 64-22" UNLESS MODIFIED BY RECLAIMED MATERIALS SPECIFICATIONS.

LEGEND

- (A) TREE ROOT PRUNING (SPECIAL)
- (B) EARTH EXCAVATION (20200100)
- (C) REMOVAL AND DISPOSAL OF UNSUITABLE MATERIAL (20201200)
- (1) GEOTECHNICAL FABRIC FOR GROUND STABILIZATION (21001000)
- (2) TOPSOIL FURNISH AND PLACE, VARIABLE DEPTH (211061600) (4" MIN.)
- (3) NOT USED
- (4) REMOVAL AND DISPOSAL OF UNSUITABLE MATERIAL (20201200) AND AGGREGATE SUBGRADE IMPROVEMENT (30300011)
- (5) SUBBASE GRANULAR MATERIAL, TYPE B 6" (31101400) •
- (6) AGGREGATE BASE COURSE, TYPE B 3" (35101598)
- (7) AGGREGATE SURFACE COURSE, TYPE B 3" (SPECIAL) (XX008310)
- (8) TOPSOIL FURNISH AND PLACE, SPECIAL (X2110100) ••
- (9) SUBBASE GRANULAR MATERIAL, TYPE B (31101100) •

• SEE SPECIAL PROVISIONS FOR COARSE AGGREGATE REQUIREMENTS FOR SUBBASE GRANULAR MATERIAL, TYPE B.

•• TOPSOIL FURNISH AND PLACE, SPECIAL TO BE PLACED ON THE LOW SIDE OF THE PROPOSED PATH EXCEPT FOR THE NO EXCAVATION AREAS AND THE IRVING PARK ROAD CONNECTOR TRAIL.

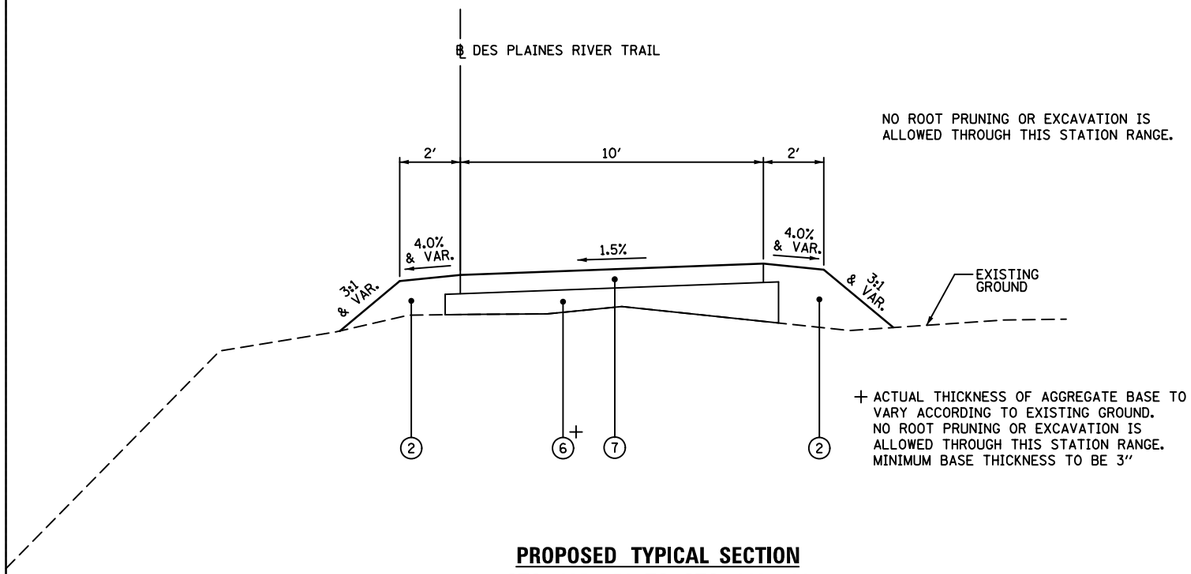

PROPOSED TYPICAL SECTION
STA 435+50 TO STA 440+00
(NO EXCAVATION ZONE)

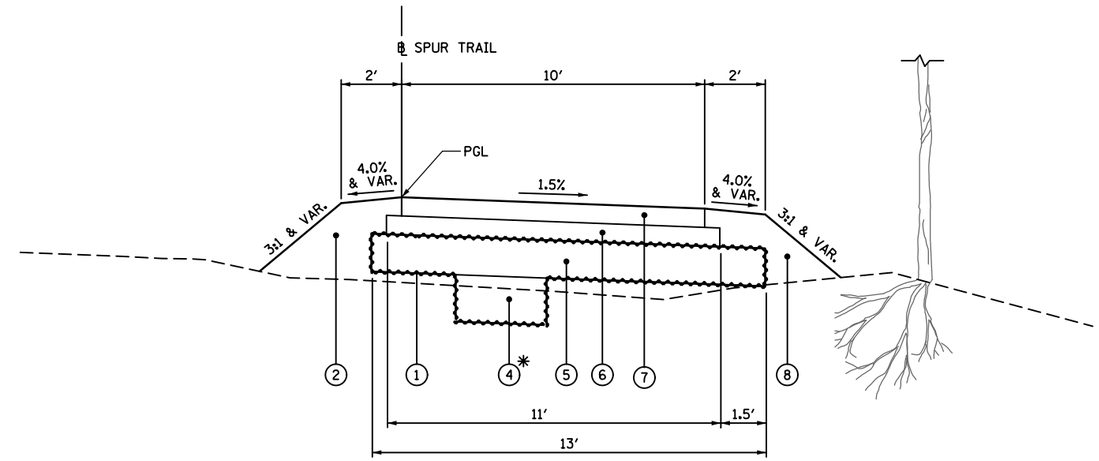

PROPOSED TYPICAL SECTION
STA 10+41.57 TO STA 11+44.34

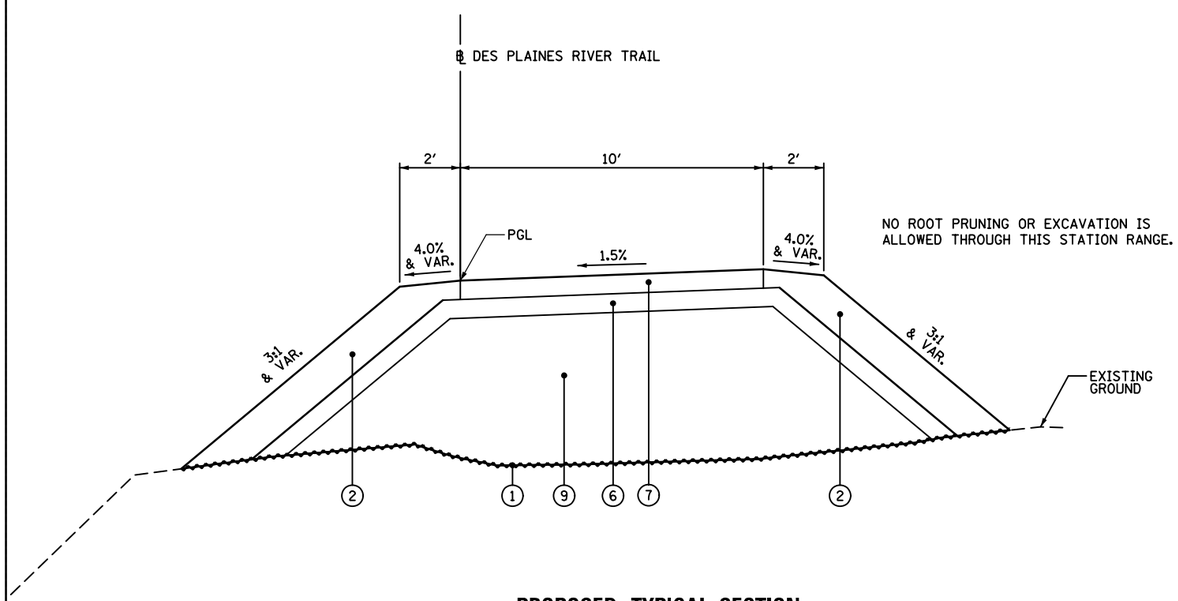

PROPOSED TYPICAL SECTION
STA 431+55 TO STA 435+50
(NO EXCAVATION ZONE)

LEGEND

- (A) TREE ROOT PRUNING (SPECIAL)
- (B) EARTH EXCAVATION (20200100)
- (C) REMOVAL AND DISPOSAL OF UNSUITABLE MATERIAL (20201200)
- (1) GEOTECHNICAL FABRIC FOR GROUND STABILIZATION (21001000)
- (2) TOPSOIL FURNISH AND PLACE, VARIABLE DEPTH (211061600) (4″ MIN.)
- (3) NOT USED
- (4) REMOVAL AND DISPOSAL OF UNSUITABLE MATERIAL (20201200) AND AGGREGATE SUBGRADE IMPROVEMENT (30300011)
- (5) SUBBASE GRANULAR MATERIAL, TYPE B 6″ (31101400) •
- (6) AGGREGATE BASE COURSE, TYPE B 3″ (35101598)
- (7) AGGREGATE SURFACE COURSE, TYPE B 3″ (SPECIAL) (XX008310)
- (8) TOPSOIL FURNISH AND PLACE, SPECIAL (X2110100) ••
- (9) SUBBASE GRANULAR MATERIAL, TYPE B (31101100) •

• SEE SPECIAL PROVISIONS FOR COARSE AGGREGATE REQUIREMENTS FOR SUBBASE GRANULAR MATERIAL, TYPE B.

•• TOPSOIL FURNISH AND PLACE, SPECIAL TO BE PLACED ON THE LOW SIDE OF THE PROPOSED PATH EXCEPT FOR THE NO EXCAVATION AREAS AND THE IRVING PARK ROAD CONNECTOR TRAIL.

EARTHWORK SCHEDULE

STATION			20200100 EARTH EXCAVATION	EARTH EXCAVATION VOLUME USED (15% SHRINKAGE)	EMBANKMENT	EARTHWORK BALANCE WASTE (+) OR SHORTAGE (-)	20201200 REMOVAL AND DISPOSAL OF UNSUITABLE	X2110100 TOPSOIL FURNISH AND PLACE, SPECIAL
IL 19 CONNECTOR			(CU YD)	(CU YD)	(CU YD)	(CU YD)	(CU YD)	(CU YD)
28+00	TO	28+50	0.0	0.0	6.0	-6.0	12.6	0.0
28+50	TO	29+00	0.7	0.6	2.8	-2.2	12.6	0.0
29+00	TO	29+50	1.9	1.6	2.0	-0.4	12.6	0.0
29+50	TO	30+00	4.0	3.4	1.8	1.6	12.6	0.0
30+00	TO	30+50	3.2	2.7	3.1	-0.4	12.6	0.0
30+50	TO	31+00	4.7	4.0	3.0	1.0	12.6	0.0
31+00	TO	31+50	5.6	4.8	2.1	2.7	13.6	0.0
31+50	TO	32+00	10.7	9.1	1.8	7.3	15.9	0.0
32+00	TO	32+50	14.6	12.4	0.6	11.8	16.5	0.0
IL 19 CONNECT SUBTOT/			**45.4**	**38.6**	**23.2**	**15.4**	**121.6**	**0.0**
SPUR TRAIL								
10+32	TO	10+50	0.0	0.0	36.5	-36.5	8.8	3.2
10+50	TO	10+75	0.0	0.0	27.1	-27.1	9.1	2.7
10+75	TO	11+00	0.4	0.3	5.5	-5.2	6.3	1.4
11+00	TO	11+44	7.1	6.0	0.0	6.0	9.2	1.1
SPUR TRAIL SUBTOTAL			**7.5**	**6.3**	**69.1**	**-62.8**	**33.4**	**8.4**
DES PLAINES RIVER TRAIL								
406+25	TO	406+50	6.0	5.1	0.0	5.1	6.0	0.8
406+50	TO	407+00	6.7	5.7	6.7	-1.0	13.1	3.6
407+00	TO	407+50	0.0	0.0	11.7	-11.7	14.0	4.3
407+50	TO	408+00	6.3	5.4	5.1	0.3	13.9	2.6
408+00	TO	408+50	72.0	61.2	0.3	60.9	34.8	10.6
408+50	TO	409+00	74.4	63.2	13.5	49.7	45.7	13.6
409+00	TO	409+50	27.0	22.9	21.1	1.8	41.2	11.2
409+50	TO	410+00	33.7	28.6	24.5	4.1	51.9	17.7
410+00	TO	410+40	12.3	10.5	45.7	-35.2	34.7	11.8
410+40	TO	410+50	0.2	0.2	15.8	-15.6	6.1	1.6
410+50	TO	410+72	1.1	0.9	29.9	-29.0	17.0	6.0
410+72	TO	411+00	0.9	0.8	22.3	-21.5	17.7	6.9
411+00	TO	411+50	0.4	0.3	10.1	-9.8	13.9	3.0
411+50	TO	412+00	0.4	0.3	16.9	-16.6	17.0	3.7
412+00	TO	412+50	2.6	2.2	15.1	-12.9	17.0	4.1
412+50	TO	413+00	7.5	6.4	0.0	6.4	13.9	2.6
413+00	TO	413+50	9.6	8.2	0.0	8.2	13.2	2.1
413+50	TO	414+00	8.1	6.9	0.0	6.9	13.2	2.2
414+00	TO	414+50	5.1	4.3	0.0	4.3	13.8	2.6
414+50	TO	415+00	4.8	4.1	0.0	4.1	13.7	2.5
415+00	TO	415+50	3.4	2.9	1.0	1.9	13.8	2.4
415+50	TO	416+00	3.8	3.2	1.0	2.2	13.7	2.3
416+00	TO	416+50	3.5	3.0	1.5	1.5	13.7	2.1
416+50	TO	417+00	3.2	2.7	9.2	-6.5	29.5	2.3
417+00	TO	417+50	3.2	2.7	11.1	-8.4	29.5	2.8
417+50	TO	417+90	0.0	0.0	16.3	-16.3	13.9	3.9
BOARDWALK								
418+50	TO	419+00	1.1	0.9	14.8	-13.9	14.8	4.5
419+00	TO	419+50	3.8	3.2	1.6	1.6	13.8	2.6
419+50	TO	420+00	5.6	4.8	0.7	4.1	13.5	2.1
420+00	TO	420+50	8.9	7.6	0.1	7.5	13.5	2.2
420+50	TO	421+00	10.6	9.0	0.0	9.0	13.3	1.9
421+00	TO	421+50	4.5	3.8	9.3	-5.5	13.6	2.7
421+50	TO	421+96	0.1	0.1	35.4	-35.3	24.7	6.0
421+96	TO	422+00	0.0	0.0	3.2	-3.2	2.3	0.7
422+00	TO	422+50	4.5	3.8	11.0	-7.2	16.2	4.4
422+50	TO	423+00	5.8	4.9	0.0	4.9	13.4	2.0
423+00	TO	423+50	2.6	2.2	0.0	2.2	13.5	2.2
423+50	TO	424+00	4.4	3.7	0.0	3.7	13.4	2.0
424+00	TO	424+50	8.6	7.3	0.0	7.3	14.6	2.2
424+50	TO	425+00	9.9	8.4	0.0	8.4	14.4	2.1
425+00	TO	425+50	7.4	6.3	0.0	6.3	13.1	1.8
425+50	TO	426+00	3.3	2.8	0.2	2.6	13.6	2.3
426+00	TO	426+50	0.4	0.3	1.5	-1.2	14.0	2.8
426+50	TO	427+00	3.3	2.8	1.3	1.5	13.7	2.3
427+00	TO	427+50	6.0	5.1	0.0	5.1	13.7	2.3
427+50	TO	428+00	2.8	2.4	4.6	-2.2	14.2	2.9
428+00	TO	428+50	0.0	0.0	23.1	-23.1	17.0	3.9
428+50	TO	429+00	0.0	0.0	48.1	-48.1	21.3	5.4
429+00	TO	429+50	0.0	0.0	73.5	-73.5	24.3	6.6
429+50	TO	430+00	0.0	0.0	94.0	-94.0	26.9	8.1
430+00	TO	430+50	0.0	0.0	97.2	-97.2	27.4	8.2
430+50	TO	431+00	0.0	0.0	90.6	-90.6	26.7	7.5
431+00	TO	431+50	0.0	0.0	84.9	-84.9	26.2	7.6
431+50	TO	431+55	0.0	0.0	4.1	-4.1	1.3	0.4
NO EXCAVATION ZONE								
440+00	TO	440+50	2.4	2.0	3.8	-1.8	7.3	1.3
440+50	TO	441+00	5.3	4.5	0.6	3.9	14.4	2.8
441+00	TO	441+50	6.0	5.1	0.5	4.6	13.6	2.3
441+50	TO	442+00	4.2	3.6	1.6	2.0	13.1	1.7
442+00	TO	442+50	1.1	0.9	2.5	-1.6	13.7	2.2
442+50	TO	443+00	0.1	0.1	5.1	-5.0	14.2	2.7
443+00	TO	443+10	0.0	0.0	0.7	-0.7	1.4	0.3
BOARDWALK								
444+00	TO	444+50	98.5	83.7	0.6	83.1	32.9	0.0
BOARDWALK								
448+70	TO	449+00	2.9	2.5	0.3	2.2	4.3	0.8
449+00	TO	449+50	4.8	4.1	4.5	-0.4	14.2	2.9
449+50	TO	450+00	0.4	0.3	4.5	-4.2	14.0	3.1
450+00	TO	450+50	3.1	2.6	0.5	2.1	14.0	2.9
450+50	TO	451+00	6.2	5.3	0.0	5.3	13.6	2.2
451+00	TO	451+50	5.7	4.8	0.7	4.1	13.8	2.7
451+50	TO	452+00	3.6	3.1	0.7	2.4	14.1	3.1
452+00	TO	452+50	1.4	1.2	3.9	-2.7	13.9	2.9
452+50	TO	453+00	0.0	0.0	9.6	-9.6	13.9	3.0
453+00	TO	453+50	0.0	0.0	19.4	-19.4	16.9	3.9
453+50	TO	454+00	0.0	0.0	35.1	-35.1	20.7	5.6
454+00	TO	454+50	0.0	0.0	41.4	-41.4	23.1	6.9
454+50	TO	455+00	0.0	0.0	37.5	-37.5	26.4	8.4
455+00	TO	455+50	0.0	0.0	29.4	-29.4	26.3	9.6
455+50	TO	456+00	1.1	0.9	19.3	-18.4	23.4	9.2
456+00	TO	456+50	4.7	4.0	7.3	-3.3	18.1	5.3
456+50	TO	457+00	5.0	4.3	4.5	-0.2	15.2	2.4
457+00	TO	457+50	3.8	3.2	4.5	-1.3	15.3	2.6
457+50	TO	458+00	6.9	5.9	0.0	5.9	13.4	2.0
458+00	TO	458+50	9.8	8.3	0.1	8.2	14.4	2.8
458+50	TO	458+66	3.5	3.0	0.1	2.9	4.7	1.3
DPRT SUBTOTAL			**570.3**	**484.5**	**1116.7**	**-632.2**	**1418.6**	**325.9**
PROJECT TOTALS			**623.2**	**529.4**	**1209.0**	**-679.6**	**1573.6**	**334.3**

SUMMARY

20200100	20400800	20201200	X2110100
EARTH EXCAVATION	FURNISHED EXCAVATION	REMOVAL AND DISPOSAL OF UNSUITABLE MATERIAL	TOPSOIL FURNISH AND PLACE, SPECIAL
(CU YD)	(CU YD)	(CU YD)	(CU YD)
623	680	1,574	334

NOTE:
STRIPPED TOPSOIL THAT IS CERTIFIED CLEAN BY THE ENGINEER MAY BE PERMANENTLY STOCKPILED AT THE FOLLOWING LOCATION:

INDIAN BOUNDARY DIVISION
8800 W. BELMONT AVE
CHICAGO, IL 60634
CONTACT PRIOR TO DELIVERY: 773-625-0606 INDIAN BOUNDARY DIVISION

THE TOPSOIL TO BE STOCKPILED AT THE INDIAN BOUNDARY DIVISION MAY NOT CONTAIN CLAY OR EXCESSIVE STICKS/ROOTS.

PROP. CURVE CONN1
PI STA. = 29+61.15
Δ = 51° 53′ 41″ (RT)
D = 52° 05′ 13″
R = 110.00′
T = 53.53′
L = 99.63′
E = 12.33′
P.C. STA. = 29+07.62
P.T. STA. = 30+07.25

PROP. CURVE CONN2
PI STA. = 31+58.16
Δ = 38° 25′ 29″ (LT)
D = 57° 17′ 45″
R = 100.00′
T = 34.85′
L = 67.06′
E = 5.90′
P.C. STA. = 31+23.31
P.T. STA. = 31+90.38

PROP. CURVE CONN3
PI STA. = 32+49.17
Δ = 35° 27′ 28″ (LT)
D = 57° 17′ 45″
R = 100.00′
T = 31.97′
L = 61.89′
E = 4.99′
P.C. STA. = 32+17.21
P.T. STA. = 32+79.09

PROP. CURVE PR_SEG41
PI STA. = 405+76.70
Δ = 23° 35′ 51″ (RT)
D = 52° 05′ 13″
R = 110.00′
T = 22.98′
L = 45.30′
E = 2.37′
P.C. STA. = 405+53.72
P.T. STA. = 405+99.03

PROP. CURVE PR_SEG42
PI STA. = 406+40.56
Δ = 45° 06′ 04″ (LT)
D = 57° 17′ 29″
R = 100.01′
T = 41.53′
L = 78.72′
E = 8.28′
P.C. STA. = 405+99.03
P.T. STA. = 406+77.75

PROP. CURVE PR_SEG43
PI STA. = 407+37.41
Δ = 23° 27′ 37″ (LT)
D = 38° 11′ 50″
R = 150.00′
T = 31.15′
L = 61.42′
E = 3.20′
P.C. STA. = 407+06.26
P.T. STA. = 407+67.68

PROP. CURVE PR_SEG44
PI STA. = 409+41.40
Δ = 110° 43′ 46″ (RT)
D = 47° 44′ 47″
R = 120.00′
T = 173.72′
L = 231.91′
E = 91.14′
P.C. STA. = 407+67.68
P.T. STA. = 409+99.59

PROP. CURVE PR_SEG45
PI STA. = 410+77.97
Δ = 76° 10′ 52″ (LT)
D = 57° 17′ 45″
R = 100.00′
T = 78.38′
L = 132.96′
E = 27.06′
P.C. STA. = 409+99.59
P.T. STA. = 411+32.55

PROP. CURVE PR_SEG46
PI STA. = 413+89.24
Δ = 133° 36′ 28″ (RT)
D = 52° 05′ 17″
R = 110.00′
T = 256.69′
L = 256.50′
E = 169.27′
P.C. STA. = 411+32.55
P.T. STA. = 413+89.06

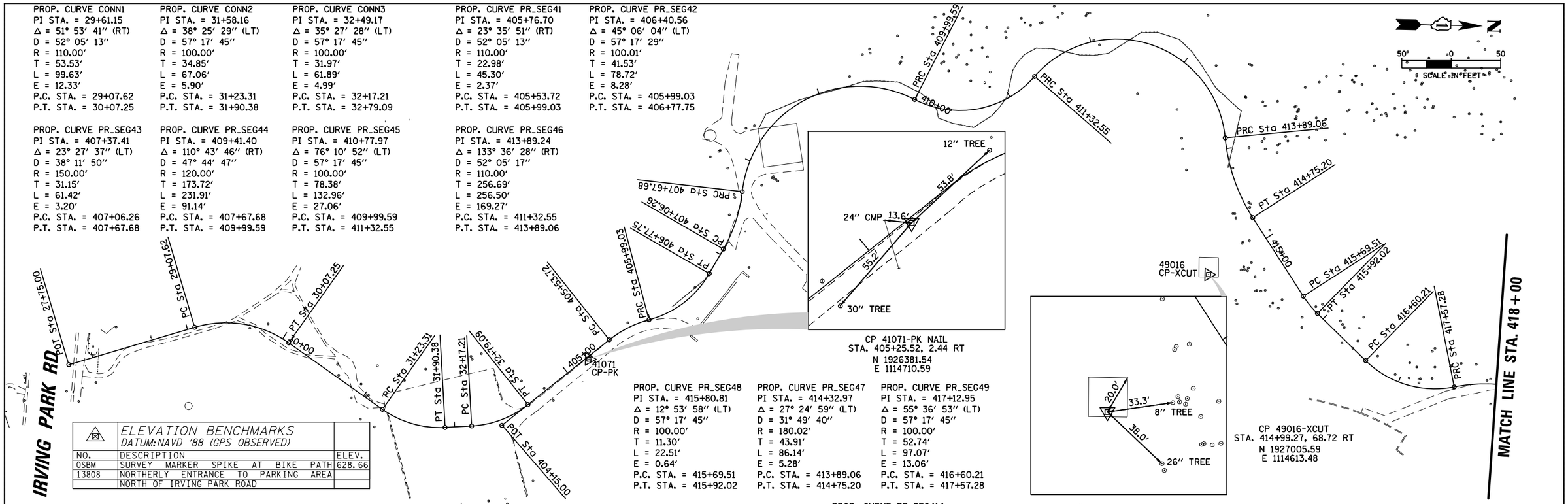

ELEVATION BENCHMARKS DATUM:NAVD '88 (GPS OBSERVED)		
NO.	DESCRIPTION	ELEV.
OSBM	SURVEY MARKER SPIKE AT BIKE PATH	628.66
13808	NORTHERLY ENTRANCE TO PARKING AREA	
	NORTH OF IRVING PARK ROAD	

CP 41071-PK NAIL
STA. 405+25.52, 2.44 RT
N 1926381.54
E 1114710.59

PROP. CURVE PR_SEG48
PI STA. = 415+80.81
Δ = 12° 53′ 58″ (LT)
D = 57° 17′ 45″
R = 100.00′
T = 11.30′
L = 22.51′
E = 0.64′
P.C. STA. = 415+69.51
P.T. STA. = 415+92.02

PROP. CURVE PR_SEG47
PI STA. = 414+32.97
Δ = 27° 24′ 59″ (LT)
D = 31° 49′ 40″
R = 180.02′
T = 43.91′
L = 86.14′
E = 5.28′
P.C. STA. = 413+89.06
P.T. STA. = 414+75.20

PROP. CURVE PR_SEG49
PI STA. = 417+12.95
Δ = 55° 36′ 53″ (LT)
D = 57° 17′ 45″
R = 100.00′
T = 52.74′
L = 97.07′
E = 13.06′
P.C. STA. = 416+60.21
P.T. STA. = 417+57.28

CP 49016-XCUT
STA. 414+99.27, 68.72 RT
N 1927005.59
E 1114613.48

PROP. CURVE PR_SEG411
PI STA. = 419+83.90
Δ = 43° 27′ 46″ (LT)
D = 57° 17′ 45″
R = 100.00′
T = 39.86′
L = 75.86′
E = 7.65′
P.C. STA. = 419+44.04
P.T. STA. = 420+19.90

PROP. CURVE PR_SEG412
PI STA. = 421+46.94
Δ = 55° 00′ 18″ (LT)
D = 57° 17′ 45″
R = 100.00′
T = 52.06′
L = 96.00′
E = 12.74′
P.C. STA. = 420+94.88
P.T. STA. = 421+90.88

PROP. CURVE PR_SEG413
PI STA. = 422+97.16
Δ = 47° 46′ 14″ (RT)
D = 23° 52′ 26″
R = 239.99′
T = 106.28′
L = 200.10′
E = 22.48′
P.C. STA. = 421+90.88
P.T. STA. = 423+90.98

PROP. CURVE PR_SEG414
PI STA. = 425+37.76
Δ = 40° 43′ 52″ (LT)
D = 38° 11′ 50″
R = 150.00′
T = 55.68′
L = 106.63′
E = 10.00′
P.C. STA. = 424+82.08
P.T. STA. = 425+88.71

PROP. CURVE PR_SEG415
PI STA. = 427+66.19
Δ = 28° 30′ 43″ (RT)
D = 14° 19′ 26″
R = 400.00′
T = 101.63′
L = 199.05′
E = 12.71′
P.C. STA. = 426+64.55
P.T. STA. = 428+63.61

PROP. CURVE PR_SEG416
PI STA. = 429+77.36
Δ = 41° 55′ 42″ (RT)
D = 52° 05′ 13″
R = 110.00′
T = 42.15′
L = 80.50′
E = 7.80′
P.C. STA. = 429+35.21
P.T. STA. = 430+15.71

PROP. CURVE PR_SEG410
PI STA. = 417+94.76
Δ = 26° 22′ 20″ (RT)
D = 35° 48′ 36″
R = 160.00′
T = 37.49′
L = 73.65′
E = 4.33′
P.C. STA. = 417+57.28
P.T. STA. = 418+30.92

CP 16851-PK NAIL
STA. 422+84.11, 22.79 LT
N 1927634.11
E 1114527.14

CP 16793-PK NAIL
STA. 425+19.20, 12.27 RT
N 1927832.51
E 1114384.96

PROP. CURVE PR_SEG417
PI STA. = 431+66.95
Δ = 32° 19′ 21″ (LT)
D = 38° 11′ 50″
R = 150.00′
T = 43.47′
L = 84.62′
E = 6.17′
P.C. STA. = 431+23.48
P.T. STA. = 432+08.10

PROP. CURVE PR_SEG418
PI STA. = 432+39.75
Δ = 32° 06′ 25″ (RT)
D = 52° 05′ 13″
R = 110.00′
T = 31.65′
L = 61.64′
E = 4.46′
P.C. STA. = 432+08.10
P.T. STA. = 432+69.74

PROP. CURVE PR_SEG419
PI STA. = 433+33.40
Δ = 18° 40′ 35″ (RT)
D = 52° 05′ 13″
R = 110.00′
T = 18.09′
L = 35.86′
E = 1.48′
P.C. STA. = 433+15.31
P.T. STA. = 433+51.17

FILE NAME = N:\SCHILLERPARK\230454\Civil\ATB_230454_01.SHT	USER NAME = mthomas	DESIGNED -	REVISED -
	PLOT SCALE = 100′	DRAWN -	REVISED -
Default	PLOT DATE = 9/6/2024	CHECKED -	REVISED -
		DATE -	REVISED -

STATE OF ILLINOIS
DEPARTMENT OF TRANSPORTATION

DES PLAINES RIVER TRAIL – SEGMENT 4
ALIGNMENTS, TIES AND BENCHMARKS

SCALE: 1:100 | SHEET OF SHEETS | STA. TO STA.

F.A. RTE.	SECTION	COUNTY	TOTAL SHEETS	SHEET NO.
N/A	17-00034-05-BT	COOK	86	14

CONTRACT NO. 61K54

ILLINOIS FED. AID PROJECT

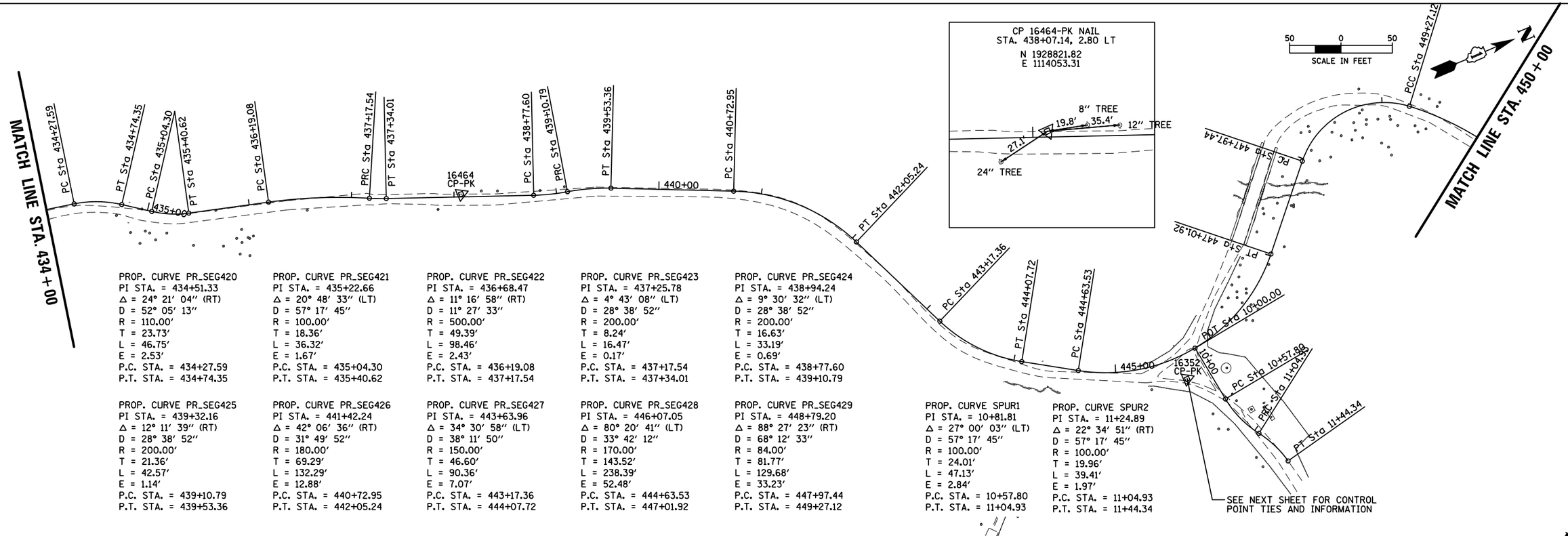

PROP. CURVE PR_SEG420
PI STA. = 434+51.33
Δ = 24° 21′ 04″ (RT)
D = 52° 05′ 13″
R = 110.00′
T = 23.73′
L = 46.75′
E = 2.53′
P.C. STA. = 434+27.59
P.T. STA. = 434+74.35

PROP. CURVE PR_SEG421
PI STA. = 435+22.66
Δ = 20° 48′ 33″ (LT)
D = 57° 17′ 45″
R = 100.00′
T = 18.36′
L = 36.32′
E = 1.67′
P.C. STA. = 435+04.30
P.T. STA. = 435+40.62

PROP. CURVE PR_SEG422
PI STA. = 436+68.47
Δ = 11° 16′ 58″ (RT)
D = 11° 27′ 33″
R = 500.00′
T = 49.39′
L = 98.46′
E = 2.43′
P.C. STA. = 436+19.08
P.T. STA. = 437+17.54

PROP. CURVE PR_SEG423
PI STA. = 437+25.78
Δ = 4° 43′ 08″ (LT)
D = 28° 38′ 52″
R = 200.00′
T = 8.24′
L = 16.47′
E = 0.17′
P.C. STA. = 437+17.54
P.T. STA. = 437+34.01

PROP. CURVE PR_SEG424
PI STA. = 438+94.24
Δ = 9° 30′ 32″ (LT)
D = 28° 38′ 52″
R = 200.00′
T = 16.63′
L = 33.19′
E = 0.69′
P.C. STA. = 438+77.60
P.T. STA. = 439+10.79

PROP. CURVE PR_SEG425
PI STA. = 439+32.16
Δ = 12° 11′ 39″ (RT)
D = 28° 38′ 52″
R = 200.00′
T = 21.36′
L = 42.57′
E = 1.14′
P.C. STA. = 439+10.79
P.T. STA. = 439+53.36

PROP. CURVE PR_SEG426
PI STA. = 441+42.24
Δ = 42° 06′ 36″ (RT)
D = 31° 49′ 52″
R = 180.00′
T = 69.29′
L = 132.29′
E = 12.88′
P.C. STA. = 440+72.95
P.T. STA. = 442+05.24

PROP. CURVE PR_SEG427
PI STA. = 443+63.96
Δ = 34° 30′ 58″ (LT)
D = 38° 11′ 50″
R = 150.00′
T = 46.60′
L = 90.36′
E = 7.07′
P.C. STA. = 443+17.36
P.T. STA. = 444+07.72

PROP. CURVE PR_SEG428
PI STA. = 446+07.05
Δ = 80° 20′ 41″ (LT)
D = 33° 42′ 12″
R = 170.00′
T = 143.52′
L = 238.39′
E = 52.48′
P.C. STA. = 444+63.53
P.T. STA. = 447+01.92

PROP. CURVE PR_SEG429
PI STA. = 448+79.20
Δ = 88° 27′ 23″ (RT)
D = 68° 12′ 33″
R = 84.00′
T = 81.77′
L = 129.68′
E = 33.23′
P.C. STA. = 447+97.44
P.T. STA. = 449+27.12

PROP. CURVE SPUR1
PI STA. = 10+81.81
Δ = 27° 00′ 03″ (LT)
D = 57° 17′ 45″
R = 100.00′
T = 24.01′
L = 47.13′
E = 2.84′
P.C. STA. = 10+57.80
P.T. STA. = 11+04.93

PROP. CURVE SPUR2
PI STA. = 11+24.89
Δ = 22° 34′ 51″ (RT)
D = 57° 17′ 45″
R = 100.00′
T = 19.96′
L = 39.41′
E = 1.97′
P.C. STA. = 11+04.93
P.T. STA. = 11+44.34

ELEVATION BENCHMARKS DATUM:NAVD '88 (GPS OBSERVED)		
NO.	DESCRIPTION	ELEV.
OSBM	X-CUT ON CONC. WALK AT THE SOUTHWEST	628.77
7031	CORNER OF THE INTERSECTION OF LAWRENCE	
	AV. & THE DRIVE TO FOREST PRESERVE	
	PARKING AREA JUST EAST OF THE DES	
	PLAINES RIVER	

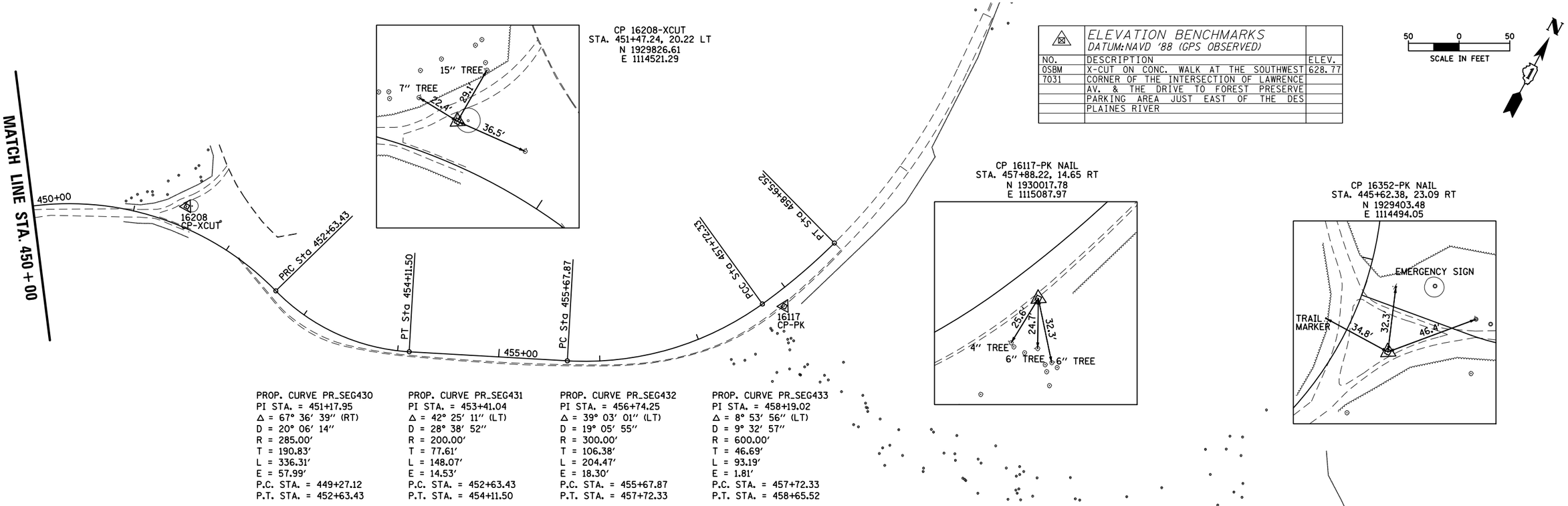

PROP. CURVE PR_SEG430
PI STA. = 451+17.95
Δ = 67° 36′ 39″ (RT)
D = 20° 06′ 14″
R = 285.00′
T = 190.83′
L = 336.31′
E = 57.99′
P.C. STA. = 449+27.12
P.T. STA. = 452+63.43

PROP. CURVE PR_SEG431
PI STA. = 453+41.04
Δ = 42° 25′ 11″ (LT)
D = 28° 38′ 52″
R = 200.00′
T = 77.61′
L = 148.07′
E = 14.53′
P.C. STA. = 452+63.43
P.T. STA. = 454+11.50

PROP. CURVE PR_SEG432
PI STA. = 456+74.25
Δ = 39° 03′ 01″ (LT)
D = 19° 05′ 55″
R = 300.00′
T = 106.38′
L = 204.47′
E = 18.30′
P.C. STA. = 455+67.87
P.T. STA. = 457+72.33

PROP. CURVE PR_SEG433
PI STA. = 458+19.02
Δ = 8° 53′ 56″ (LT)
D = 9° 32′ 57″
R = 600.00′
T = 46.69′
L = 93.19′
E = 1.81′
P.C. STA. = 457+72.33
P.T. STA. = 458+65.52

FILE NAME = N:\SCHILLERPARK\230454\Civil\ATB_230454_02.SHT	USER NAME = mthomas	DESIGNED -	REVISED -
	PLOT SCALE = 100′	DRAWN -	REVISED -
Default	PLOT DATE = 9/6/2024	CHECKED -	REVISED -
		DATE -	REVISED -

STATE OF ILLINOIS
DEPARTMENT OF TRANSPORTATION

DES PLAINES RIVER TRAIL – SEGMENT 4
ALIGNMENTS, TIES AND BENCHMARKS

SCALE: 1:100 | SHEET OF SHEETS | STA. TO STA.

F.A. RTE.	SECTION	COUNTY	TOTAL SHEETS	SHEET NO.
N/A	17-00034-05-BT	COOK	86	15
		CONTRACT NO. 61K54		
		ILLINOIS FED. AID PROJECT		

IRVING PARK ROAD

50' WETLAND BUFFER

IRVING PARK ROAD CONNECTOR TRAIL
PGL AND BASELINE

BEGIN IMPROVEMENTS
STA 27+91.47

SEALING ABANDONED WATER WELL
(FOREST PRESERVE TO PROVIDE BRUSH
CLEARING FOR ACCESS TO WELL)

NOTE:
REMOVAL OF DOWNED TREES WITHIN THE WORK ZONE WILL
BE PAID FOR AS "DEBRIS REMOVAL". SEE THE SPECIAL
PROVISIONS FOR MORE INFORMATION.

DES PLAINES RIVER TRAIL
PGL AND BASELINE

WETLAND

MATCH LINE STA. 405+60

NO CONSTRUCTION ACCESS TO
EXISTING HMA PATH

50' WETLAND BUFFER

100-YEAR FLOODPLAIN

SAWCUT EDGE OF PARKING LOT
(INCLUDED IN COST OF PAVEMENT REMOVAL)

SCALE IN FEET

LEGEND

- PAVEMENT REMOVAL (HMA)
- CURB REMOVAL
- TREE REMOVAL
- LINEAR ITEM REMOVAL
- SIDEWALK REMOVAL
- EXISTING PATH REMOVAL (PAID FOR AS EARTH EXCAVATION)

FILE NAME = N:\SCHILLERPARK\230454\Civil\REM_230454_01.SHT	USER NAME = mthomas	DESIGNED -	REVISED -	STATE OF ILLINOIS DEPARTMENT OF TRANSPORTATION	DES PLAINES RIVER TRAIL – SEGMENT 4	F.A. RTE.	SECTION	COUNTY	TOTAL SHEETS / SHEET NO.
		DRAWN -	REVISED -		EXISTING CONDITIONS AND REMOVAL PLANS	N/A	17-00034-05-BT	COOK	86 / 16
	PLOT SCALE = 40'	CHECKED -	REVISED -					CONTRACT NO. 61K54	
Default	PLOT DATE = 9/6/2024	DATE -	REVISED -		SCALE: 1:40 SHEET OF SHEETS STA. TO STA.		ILLINOIS FED. AID PROJECT		

SEALING ABANDONED WATER WELL

DES PLAINES RIVER TRAIL
PGL AND BASELINE

WETLAND

50' WETLAND BUFFER

100-YEAR FLOODPLAIN

NO CONSTRUCTION ACCESS TO
EXISTING HMA PATH

CONCRETE PAD REMOVAL
(PAID FOR AS SIDEWALK REMOVAL)

CHICAGO/SHILLER PARK
BOUNDARY

MATCH LINE STA. 405 + 60

MATCH LINE STA. 412 + 40

SCALE IN FEET

LEGEND

- PAVEMENT REMOVAL (HMA)
- CURB REMOVAL
- TREE REMOVAL
- LINEAR ITEM REMOVAL
- SIDEWALK REMOVAL
- EXISTING PATH REMOVAL (PAID FOR AS EARTH EXCAVATION)

FILE NAME = N:\SCHILLERPARK\230454\Civil\REM_230454_02.SHT	USER NAME = mthomas	DESIGNED -	REVISED -
		DRAWN -	REVISED -
	PLOT SCALE = 40'	CHECKED -	REVISED -
Default	PLOT DATE = 9/6/2024	DATE -	REVISED -

STATE OF ILLINOIS
DEPARTMENT OF TRANSPORTATION

DES PLAINES RIVER TRAIL – SEGMENT 4
EXISTING CONDITIONS AND REMOVAL PLANS

SCALE: 1:40 | SHEET OF SHEETS | STA. TO STA.

F.A. RTE.	SECTION	COUNTY	TOTAL SHEETS	SHEET NO.
N/A	17-00034-05-BT	COOK	86	17

CONTRACT NO. 61K54

ILLINOIS FED. AID PROJECT

MATCH LINE STA. 412+40

MATCH LINE STA. 418+50

MATCH LINE STA. 418+50

MATCH LINE STA. 423+00

413

414

415+00

416

417

418

419

420+00

421

422

14"

4" 8" 6"

2-4",2-7"

8"

6"

4"

8"

24"

22"

5" 5"

7"

12"

4"

6" 6"

8" 6"

5"

4"

DES PLAINES RIVER TRAIL
PGL AND BASELINE

100-YEAR FLOODPLAIN

CONC.

WETLAND

CURB REMOVAL
14 LF

PIPE CULVERT REMOVAL
20 LF

12" VCP CULVERT
INV=423.10

12" CMP CULVERT
INV=423.38

CONC. WALL

STAIRS

20 0 20
SCALE IN FEET

N

LEGEND

- PAVEMENT REMOVAL (HMA)
- CURB REMOVAL
- TREE REMOVAL
- LINEAR ITEM REMOVAL
- SIDEWALK REMOVAL
- EXISTING PATH REMOVAL (PAID FOR AS EARTH EXCAVATION)

FILE NAME = N:\SCHILLERPARK\230454\Civil\REM_230454_03.SHT	USER NAME = mthomas	DESIGNED -	REVISED -
		DRAWN -	REVISED -
	PLOT SCALE = 40'	CHECKED -	REVISED -
Default	PLOT DATE = 9/6/2024	DATE -	REVISED -

STATE OF ILLINOIS
DEPARTMENT OF TRANSPORTATION

DES PLAINES RIVER TRAIL – SEGMENT 4
EXISTING CONDITIONS AND REMOVALS

SCALE: 1:40 | SHEET OF SHEETS | STA. TO STA.

F.A. RTE.	SECTION	COUNTY	TOTAL SHEETS	SHEET NO.
N/A	17-00034-05-BT	COOK	86	18

CONTRACT NO. 61K54

ILLINOIS FED. AID PROJECT

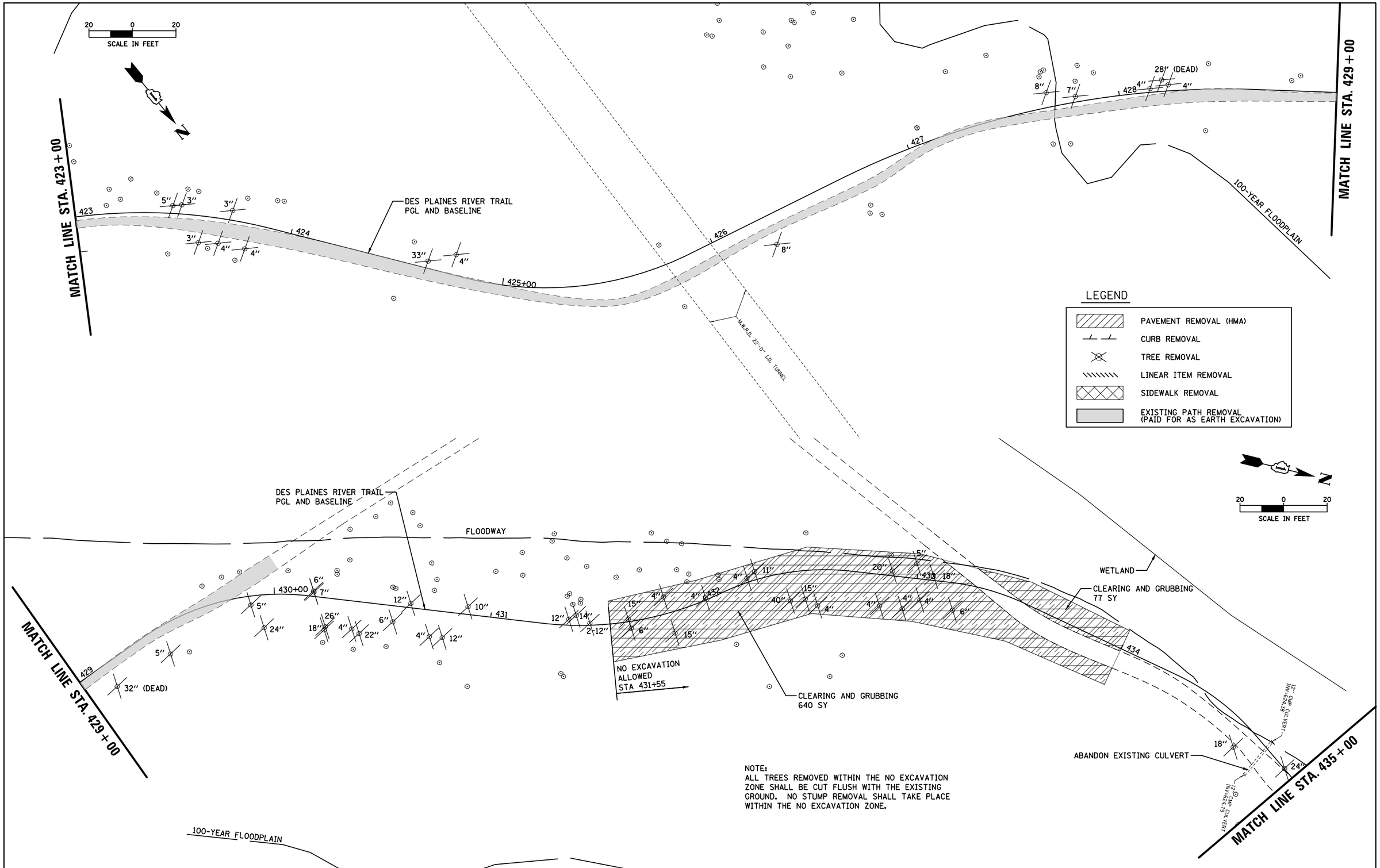

NOTE:
ALL TREES REMOVED WITHIN THE NO EXCAVATION ZONE SHALL BE CUT FLUSH WITH THE EXISTING GROUND. NO STUMP REMOVAL SHALL TAKE PLACE WITHIN THE NO EXCAVATION ZONE.

FILE NAME = N:\SCHILLERPARK\230454\Civil\REM_230454_04.SHT	USER NAME = mthomas	DESIGNED -	REVISED -
		DRAWN -	REVISED -
	PLOT SCALE = 40'	CHECKED -	REVISED -
Default	PLOT DATE = 9/6/2024	DATE -	REVISED -

STATE OF ILLINOIS
DEPARTMENT OF TRANSPORTATION

DES PLAINES RIVER TRAIL – SEGMENT 4
EXISTING CONDITIONS AND REMOVALS

SCALE: 1:40 | SHEET OF SHEETS | STA. TO STA.

F.A. RTE.	SECTION	COUNTY	TOTAL SHEETS	SHEET NO.
N/A	17-00034-05-BT	COOK	86	19

CONTRACT NO. 61K54

ILLINOIS FED. AID PROJECT

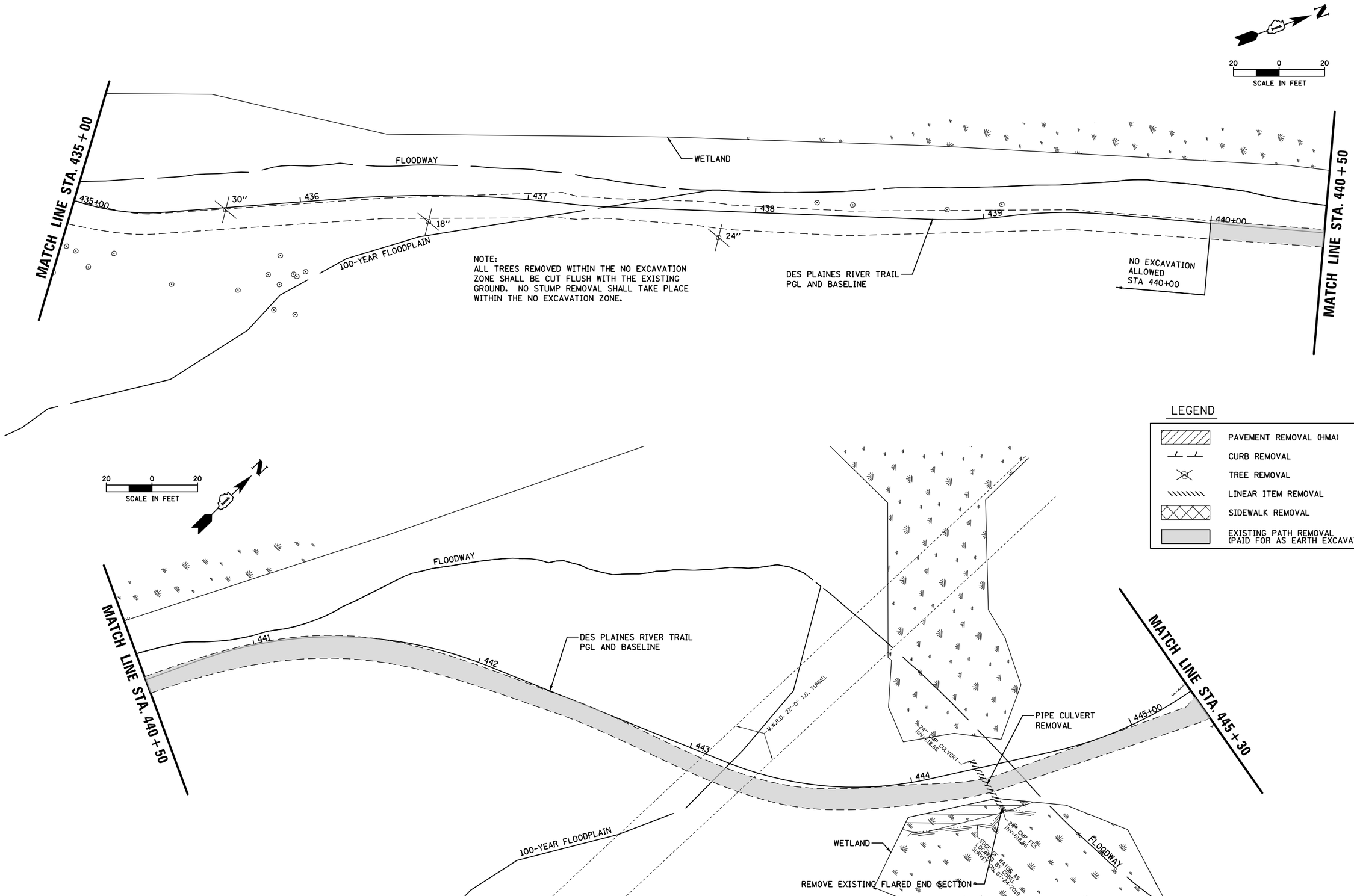

FILE NAME = N:\SCHILLERPARK\230454\Civil\REM_230454_05.SHT	USER NAME = mthomas	DESIGNED -	REVISED -
		DRAWN -	REVISED -
	PLOT SCALE = 40'	CHECKED -	REVISED -
Default	PLOT DATE = 9/6/2024	DATE -	REVISED -

STATE OF ILLINOIS
DEPARTMENT OF TRANSPORTATION

DES PLAINES RIVER TRAIL – SEGMENT 4
EXISTING CONDITIONS AND REMOVALS

SCALE: 1:40 | SHEET OF SHEETS | STA. TO STA.

F.A. RTE.	SECTION	COUNTY	TOTAL SHEETS	SHEET NO.
N/A	17-00034-05-BT	COOK	86	20
		CONTRACT NO. 61K54		
	ILLINOIS FED. AID PROJECT			

MATCH LINE STA. 445+30

EXISTING TRAIL REMOVAL

EXISTING STONE CULVERT BRIDGE TO REMAIN

WETLAND

CLEARING AND GRUBBING 103 SY

REMOVE GEOTECHNICAL MAT WITHIN PROPOSED PATH LIMITS (INCLUDED IN COST OF EARTH EXCAVATION)

CLEARING AND GRUBBING 191 SY

DES PLAINES RIVER TRAIL PGL AND BASELINE

WETLAND

IT SHALL BE THE CONTRACTORS RESPONSIBILITY TO REPAIR ANY DAMAGE CAUSED TO THE EXISTING GEOTECHNICAL MAT OUTSIDE THE LIMITS OF THE PROPOSED PATH

M.W.R.D. 22'-0" I.D. TUNNEL

450+00

MATCH LINE STA. 451+00

SCALE IN FEET 20 0 20

LEGEND

- PAVEMENT REMOVAL (HMA)
- CURB REMOVAL
- TREE REMOVAL
- LINEAR ITEM REMOVAL
- SIDEWALK REMOVAL
- EXISTING PATH REMOVAL (PAID FOR AS EARTH EXCAVATION)

FILE NAME = N:\SCHILLERPARK\230454\Civil\REM_230454_06.SHT	USER NAME = mthomas	DESIGNED -	REVISED -
	PLOT SCALE = 40'	DRAWN -	REVISED -
Default	PLOT DATE = 9/6/2024	CHECKED -	REVISED -
		DATE -	REVISED -

STATE OF ILLINOIS
DEPARTMENT OF TRANSPORTATION

DES PLAINES RIVER TRAIL – SEGMENT 4
EXISTING CONDITIONS AND REMOVALS

SCALE: 1:40 | SHEET OF SHEETS | STA. TO STA.

F.A. RTE.	SECTION	COUNTY	TOTAL SHEETS	SHEET NO.
N/A	17-00034-05-BT	COOK	86	21

CONTRACT NO. 61K54

ILLINOIS FED. AID PROJECT

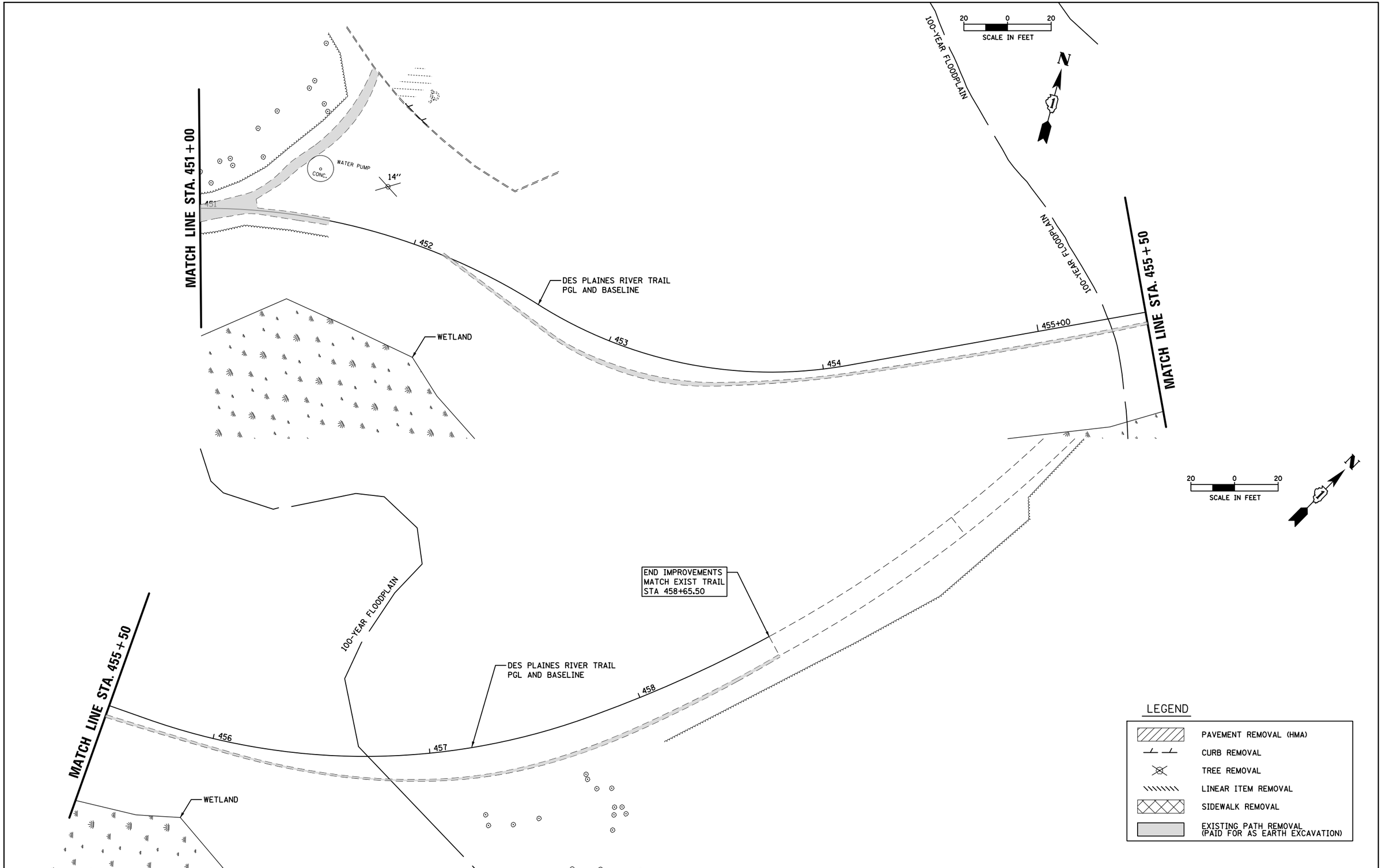

FILE NAME =	USER NAME = mthomas	DESIGNED -	REVISED -
N:\SCHILLERPARK\230454\Civil\REM_230454_07.SHT		DRAWN -	REVISED -
	PLOT SCALE = 40'	CHECKED -	REVISED -
Default	PLOT DATE = 9/6/2024	DATE -	REVISED -

STATE OF ILLINOIS
DEPARTMENT OF TRANSPORTATION

DES PLAINES RIVER TRAIL – SEGMENT 4
EXISTING CONDITIONS AND REMOVAL PLANS

SCALE: 1:40 | SHEET OF SHEETS | STA. TO STA.

F.A. RTE.	SECTION	COUNTY	TOTAL SHEETS	SHEET NO.
N/A	17-00034-05-BT	COOK	86	22
		CONTRACT NO. 61K54		
	ILLINOIS	FED. AID PROJECT		

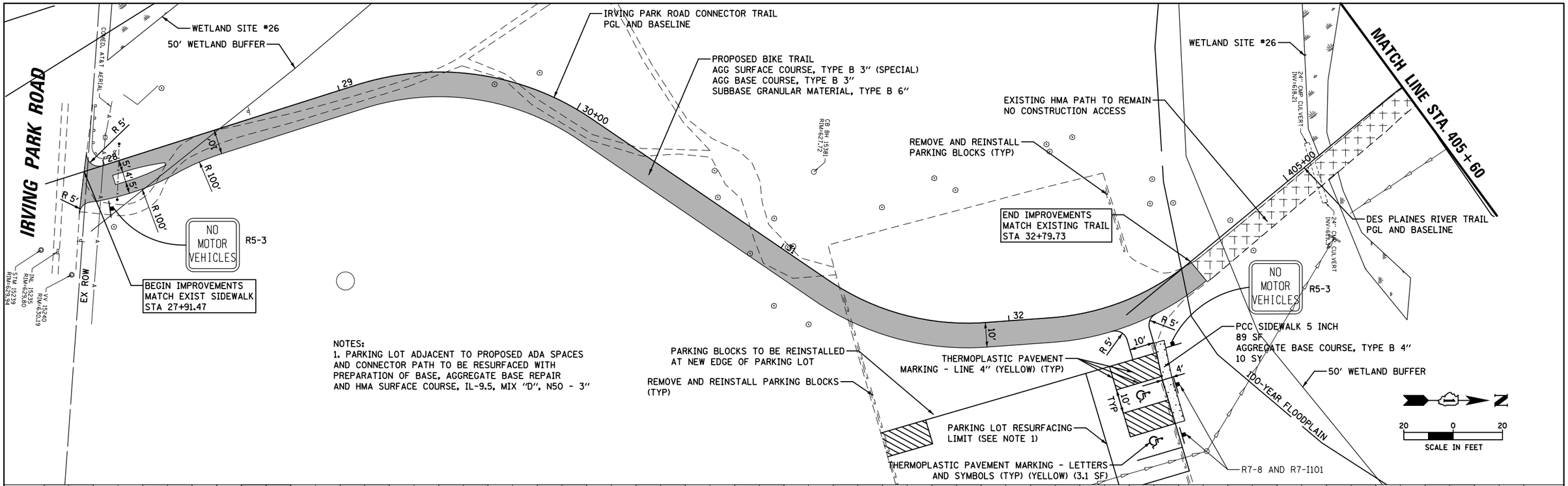

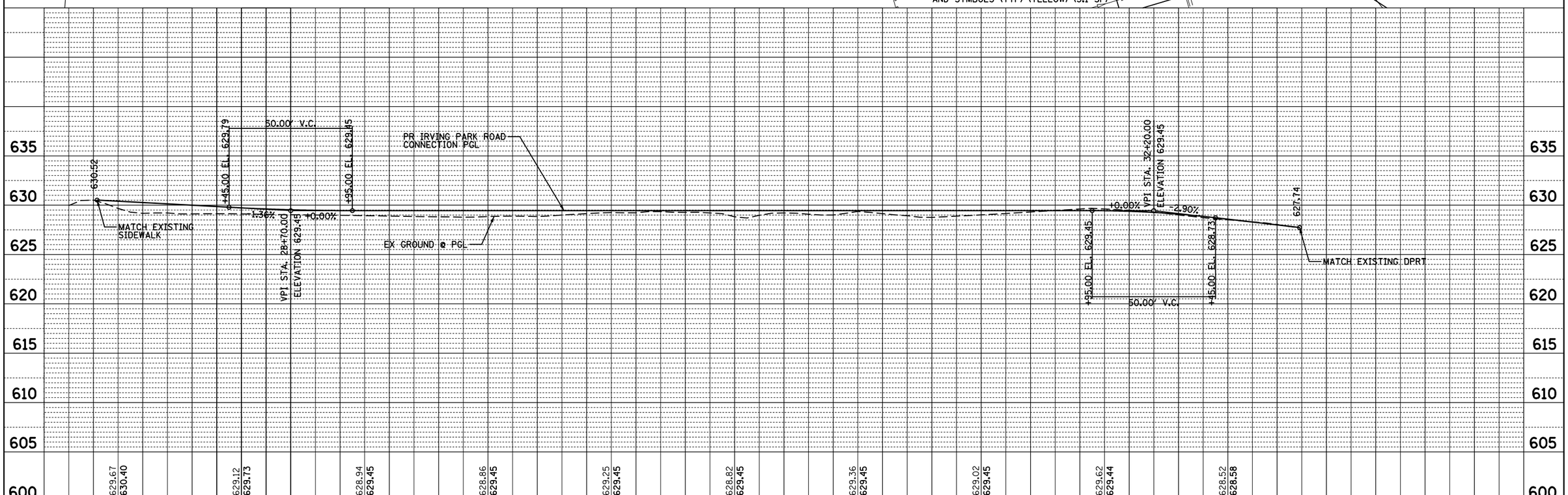

PLAN	BY	DATE
SURVEYED		
PLOTTED		
ALIGNMENT CHECKED		
RT. OF WAY CHECKED		
CADD FILE NAME		
NOTE BOOK NO.		

PROFILE	BY	DATE
SURVEYED		
PLOTTED		
GRADES CHECKED		
B.M. NOTED		
STRUCTURE NOTATNS CHKD		
NOTE BOOK NO.		

FILE NAME = N:\SCHILLERPARK\230454\Civil\RPP_230454.0.SHT	USER NAME = mthomas	DESIGNED -	REVISED -
		DRAWN -	REVISED -
	PLOT SCALE = 40'	CHECKED -	REVISED -
Default	PLOT DATE = 9/6/2024	DATE -	REVISED -

STATE OF ILLINOIS
DEPARTMENT OF TRANSPORTATION

DES PLAINES RIVER TRAIL – SEGMENT 4
IRVING PARK ROAD CONNECTION
PLAN AND PROFILE

SCALE: 1:40 | SHEET OF 86 SHEETS | STA. TO STA.

F.A. RTE.	SECTION	COUNTY	TOTAL SHEETS	SHEET NO.
N/A	17-00034-05-BT	COOK	86	23

CONTRACT NO. 61K54

ILLINOIS FED. AID PROJECT

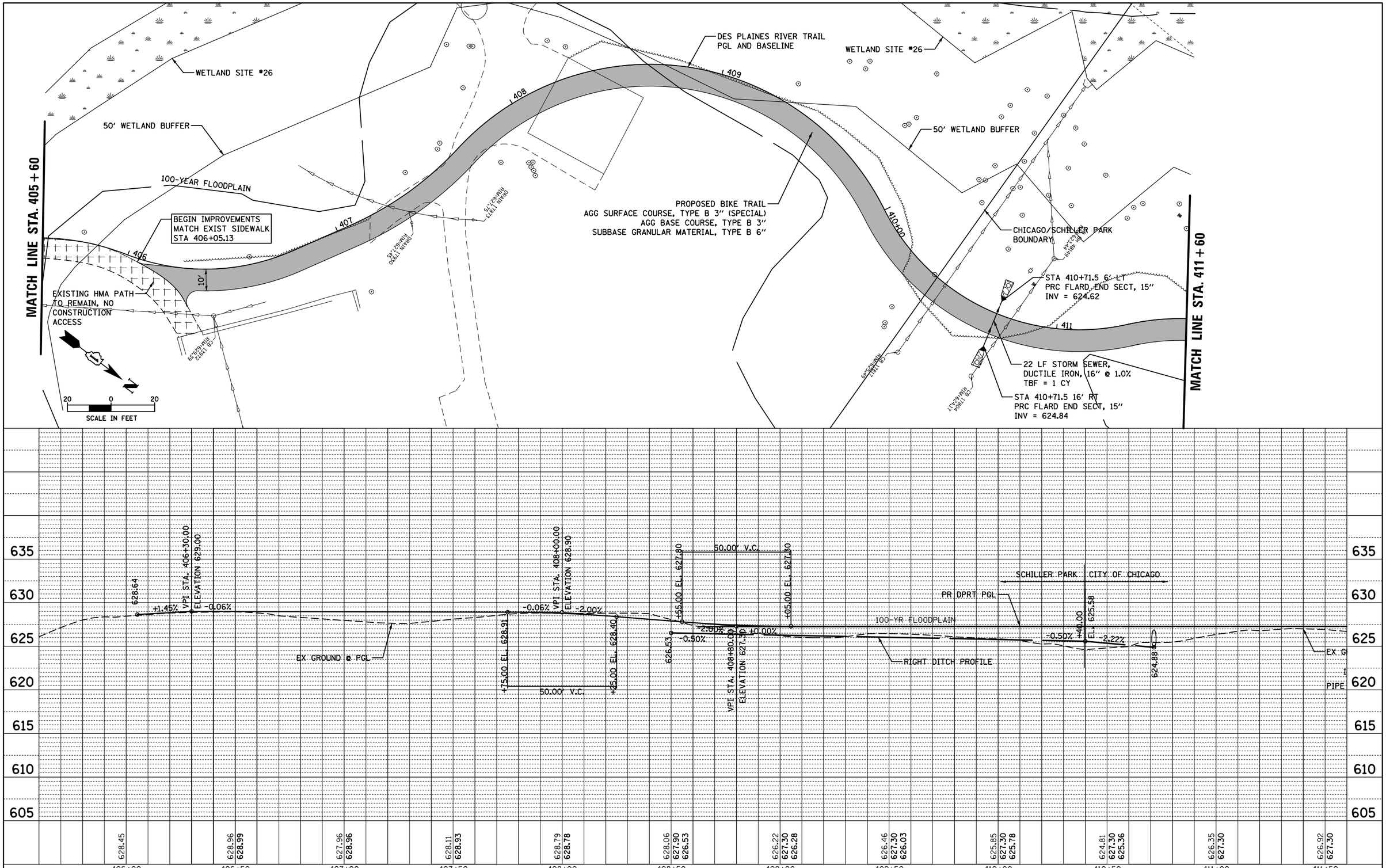

FILE NAME = N:\SCHILLERPARK\230454\Civil\RPP_230454.02.SHT	USER NAME = mthomas	DESIGNED -	REVISED -
Default	PLOT SCALE = 40'	DRAWN -	REVISED -
	PLOT DATE = 9/6/2024	CHECKED -	REVISED -
		DATE -	REVISED -

STATE OF ILLINOIS
DEPARTMENT OF TRANSPORTATION

DES PLAINES RIVER TRAIL – SEGMENT 4

PLAN AND PROFILE

SCALE: 1:40 | SHEET OF 86 SHEETS | STA. TO STA.

F.A. RTE.	SECTION	COUNTY	TOTAL SHEETS	SHEET NO.
N/A	17-00034-05-BT	COOK	86	24

CONTRACT NO. 61K54

ILLINOIS FED. AID PROJECT

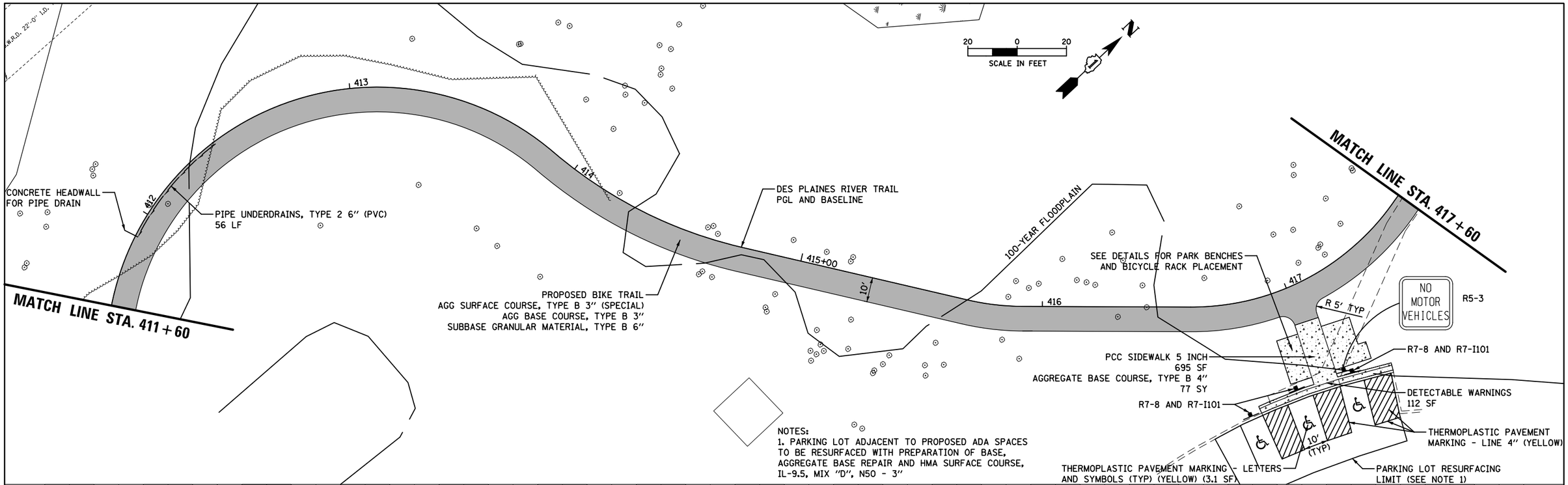

NOTES:
1. PARKING LOT ADJACENT TO PROPOSED ADA SPACES TO BE RESURFACED WITH PREPARATION OF BASE, AGGREGATE BASE REPAIR AND HMA SURFACE COURSE, IL-9.5, MIX "D", N50 - 3"

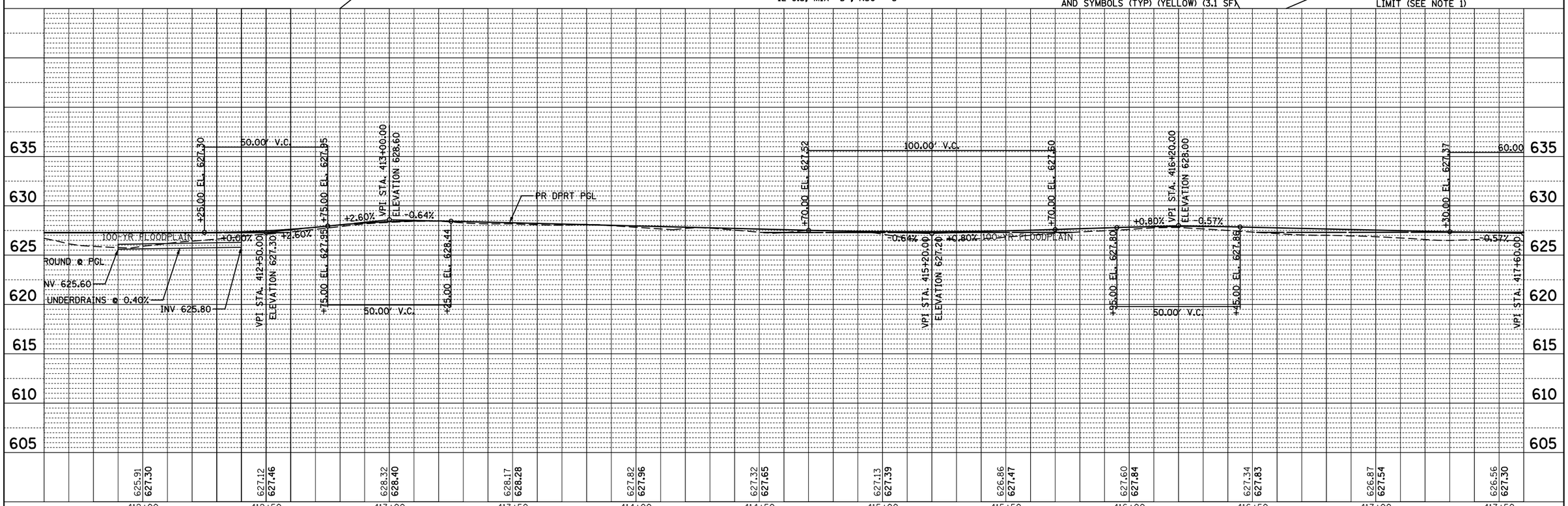

PLAN		BY	DATE
SURVEYED			
PLOTTED			
ALIGNMENT CHECKED			
RT. OF WAY CHECKED			
CADD FILE NAME			
NOTE BOOK NO.			

PROFILE		BY	DATE
SURVEYED			
PLOTTED			
GRADES CHECKED			
BM. NOTED			
STRUCTURE NOTATNS CHKD			
NOTE BOOK NO.			

FILE NAME = N:\SCHILLERPARK\230454\Civil\RPP_230454.03.SHT	USER NAME = mthomas	DESIGNED -	REVISED -
		DRAWN -	REVISED -
	PLOT SCALE = 40'	CHECKED -	REVISED -
Default	PLOT DATE = 9/6/2024	DATE -	REVISED -

STATE OF ILLINOIS
DEPARTMENT OF TRANSPORTATION

DES PLAINES RIVER TRAIL – SEGMENT 4
PLAN AND PROFILE

SCALE: 1:40 | SHEET OF 86 SHEETS | STA. TO STA.

F.A. RTE.	SECTION	COUNTY	TOTAL SHEETS	SHEET NO.
N/A	17-00034-05-BT	COOK	86	25

CONTRACT NO. 61K54

ILLINOIS FED. AID PROJECT

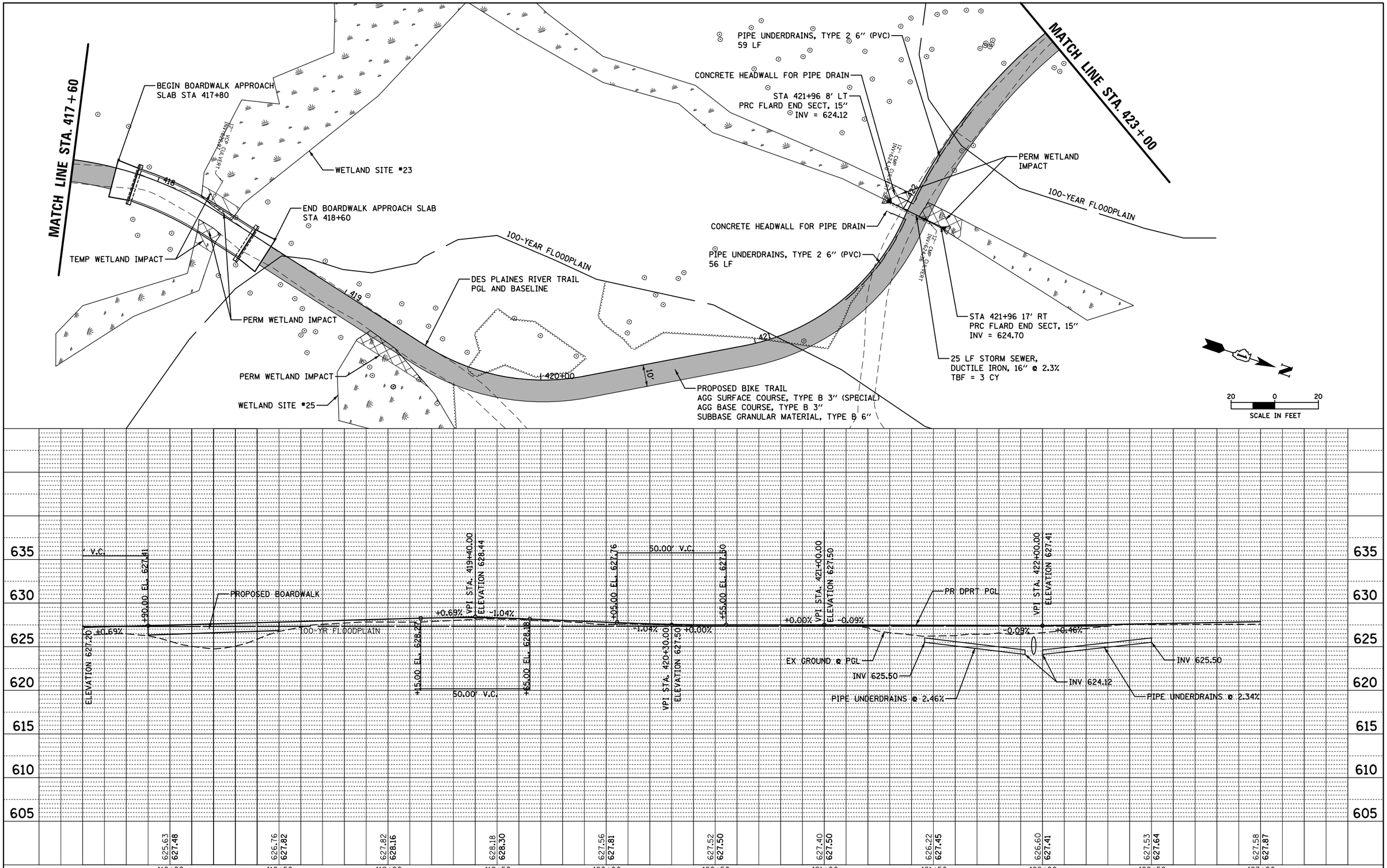

PLAN		BY	DATE
SURVEYED			
PLOTTED			
ALIGNMENT CHECKED			
RT. OF WAY CHECKED			
CADD FILE NAME			
NOTE BOOK NO.			

PROFILE		BY	DATE
SURVEYED			
PLOTTED			
GRADES CHECKED			
BKM. NOTED			
STRUCTURE NOTATIONS CHKD			
NOTE BOOK NO.			

FILE NAME = N:\SCHILLERPARK\230454\Civil\RPP_230454.04.SHT	USER NAME = mthomas	DESIGNED -	REVISED -
		DRAWN -	REVISED -
Default	PLOT SCALE = 40'	CHECKED -	REVISED -
	PLOT DATE = 9/6/2024	DATE -	REVISED -

STATE OF ILLINOIS
DEPARTMENT OF TRANSPORTATION

DES PLAINES RIVER TRAIL – SEGMENT 4
PLAN AND PROFILE

SCALE: 1:40 | SHEET OF 86 SHEETS | STA. TO STA.

F.A. RTE.	SECTION	COUNTY	TOTAL SHEETS	SHEET NO.
N/A	17-00034-05-BT	COOK	86	26
		CONTRACT NO. 61K54		
		ILLINOIS FED. AID PROJECT		

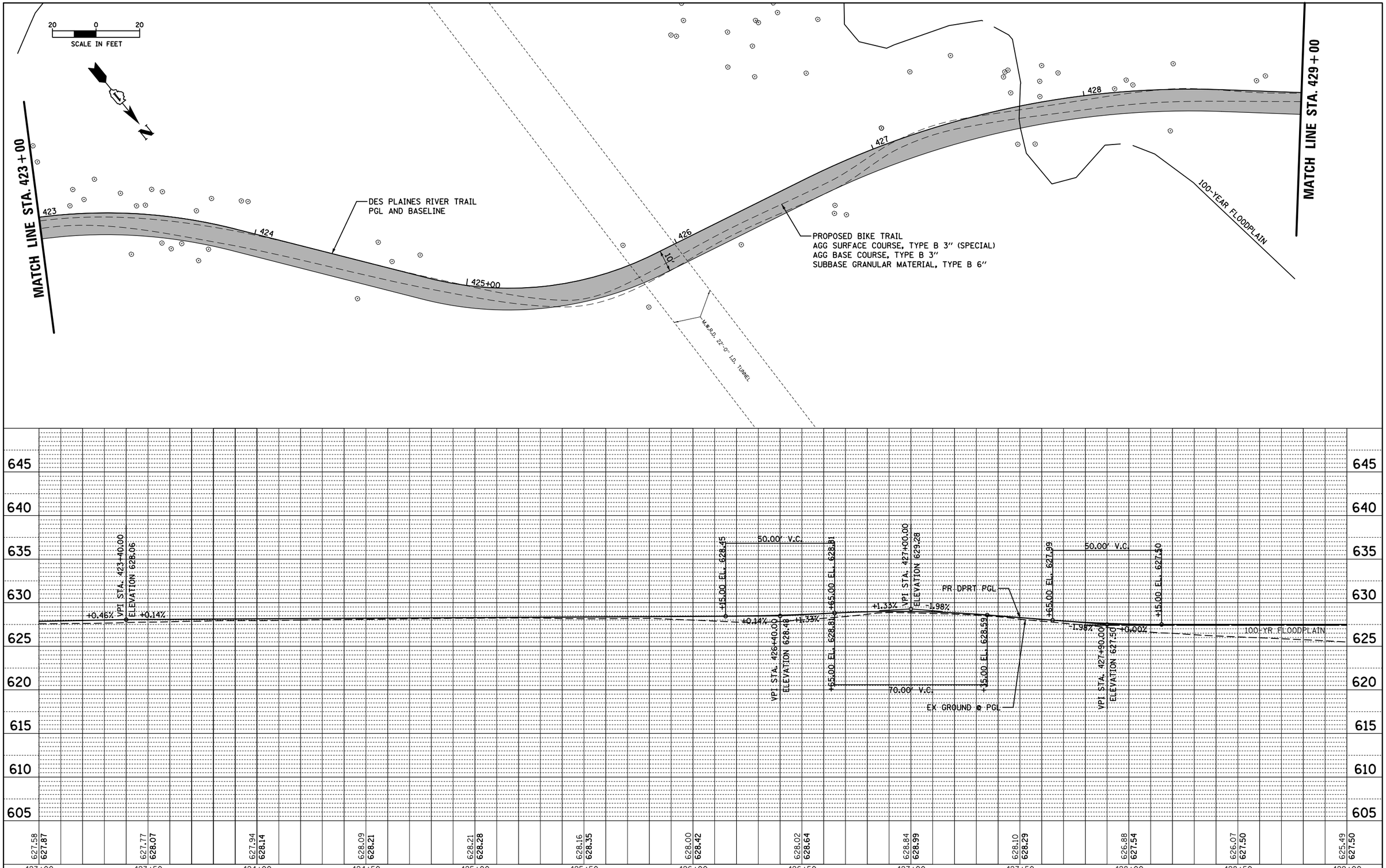

PLAN		BY	DATE
NOTE BOOK NO. ____	SURVEYED		
	PLOTTED		
	ALIGNMENT CHECKED		
	RT. OF WAY CHECKED		
	CADD FILE NAME		

PROFILE		BY	DATE
NOTE BOOK NO. ____	SURVEYED		
	PLOTTED		
	GRADES CHECKED		
	BRIDGE NOTES CHKD		
	STRUCTURE NOTATNS CHKD		

FILE NAME = N:\SCHILLERPARK\230454\Civil\RPP_230454_05.SHT	USER NAME = mthomas	DESIGNED -
Default		DRAWN -
	PLOT SCALE = 40'	CHECKED -
	PLOT DATE = 9/6/2024	DATE -

REVISED	REVISED	REVISED	REVISED
-	-	-	-

STATE OF ILLINOIS
DEPARTMENT OF TRANSPORTATION

DES PLAINES RIVER TRAIL – SEGMENT 4
PLAN AND PROFILE

SCALE: 1:40 | SHEET OF 86 SHEETS | STA. TO STA.

F.A. RTE.	SECTION	COUNTY	TOTAL SHEETS	SHEET NO.
N/A	17-00034-05-BT	COOK	86	27

CONTRACT NO. 61K54

ILLINOIS FED. AID PROJECT

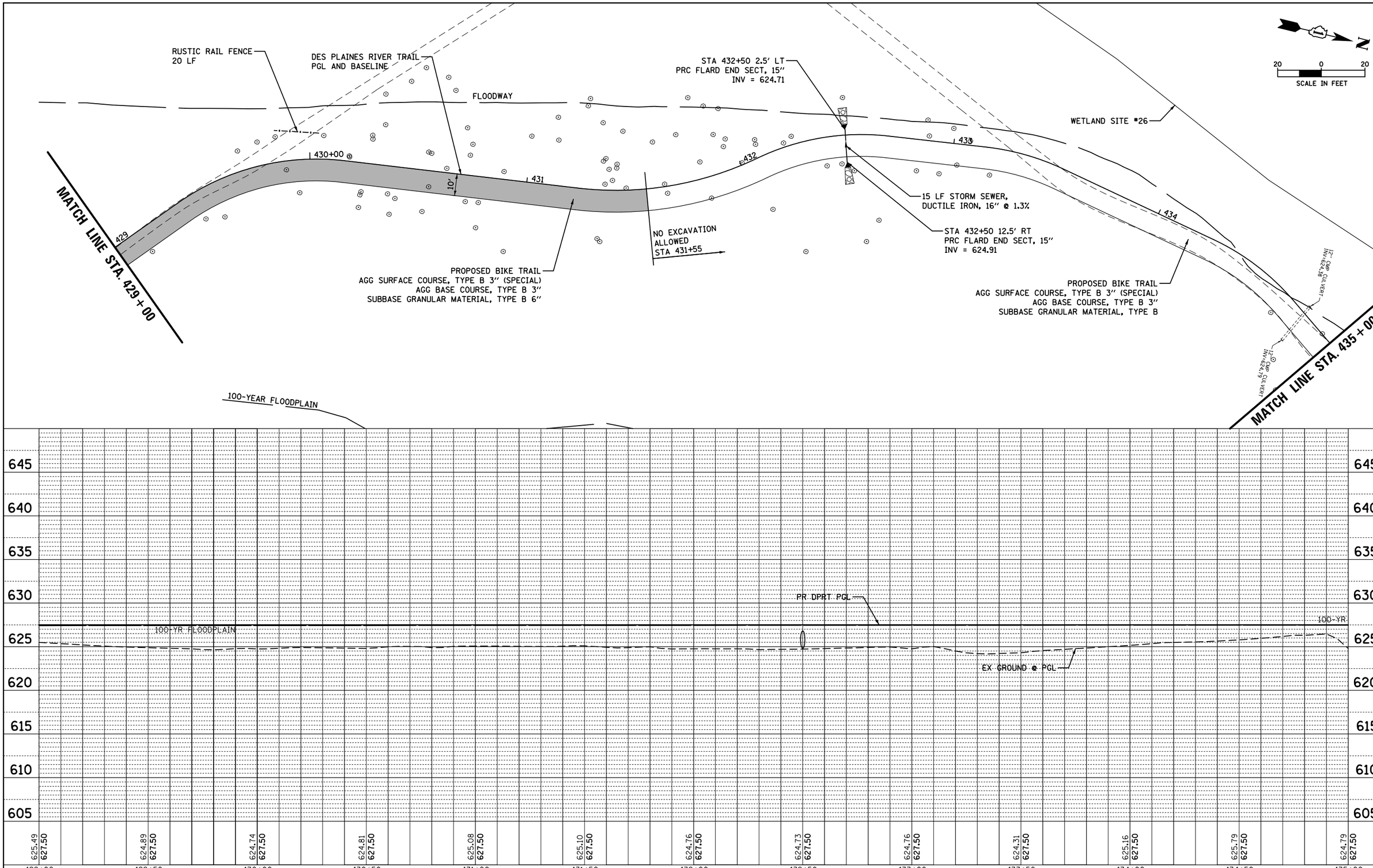

PLAN		BY	DATE
	SURVEYED		
	PLOTTED		
	ALIGNMENT CHECKED		
NOTE BOOK	RT. OF WAY CHECKED		
NO.	CADD FILE NAME		

PROFILE		BY	DATE
	SURVEYED		
	PLOTTED		
	GRADES CHECKED		
NOTE BOOK	B.M. NOTED		
NO.	STRUCTURE NOTATIONS CHKD		

FILE NAME = N:\SCHILLERPARK\230454\Civil\RPP_230454.06.SHT	USER NAME = mthomas	DESIGNED -	REVISED -
		DRAWN -	REVISED -
Default	PLOT SCALE = 40'	CHECKED -	REVISED -
	PLOT DATE = 9/6/2024	DATE -	REVISED -

STATE OF ILLINOIS
DEPARTMENT OF TRANSPORTATION

DES PLAINES RIVER TRAIL – SEGMENT 4
PLAN AND PROFILE

SCALE: 1:40 | SHEET OF 86 SHEETS | STA. TO STA.

F.A. RTE.	SECTION	COUNTY	TOTAL SHEETS	SHEET NO.
N/A	17-00034-05-BT	COOK	86	28
		CONTRACT NO. 61K54		
		ILLINOIS FED. AID PROJECT		

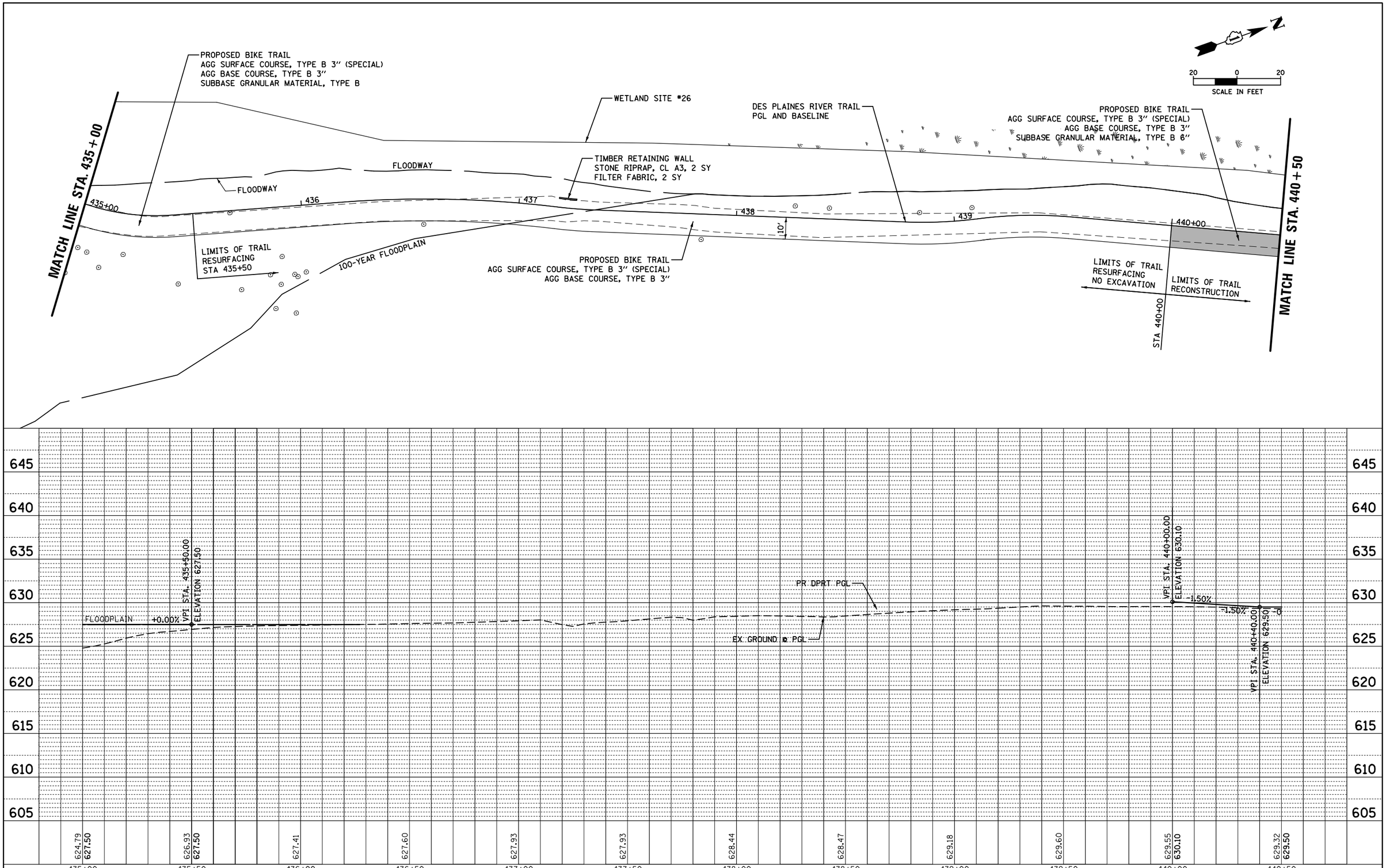

PLAN

SURVEYED			
PLOTTED			
ALIGNMENT CHECKED			
RT. OF WAY CHECKED			
CADD FILE NAME			
NOTE BOOK NO.	BY	DATE	

PROFILE

SURVEYED			
PLOTTED			
GRADES CHECKED			
BM. NOTED			
STRUCTURE NOTATNS CHKD			
NOTE BOOK NO.	BY	DATE	

FILE NAME = N:\SCHILLERPARK\230454\Civil\RPP_230454.07.SHT	USER NAME = mthomas	DESIGNED -	REVISED -
		DRAWN -	REVISED -
Default	PLOT SCALE = 40'	CHECKED -	REVISED -
	PLOT DATE = 9/6/2024	DATE -	REVISED -

STATE OF ILLINOIS
DEPARTMENT OF TRANSPORTATION

DES PLAINES RIVER TRAIL – SEGMENT 4
PLAN AND PROFILE

SCALE: 1:40 | SHEET OF 86 SHEETS | STA. TO STA.

F.A. RTE.	SECTION	COUNTY	TOTAL SHEETS	SHEET NO.
N/A	17-00034-05-BT	COOK	86	29

CONTRACT NO. 61K54

ILLINOIS FED. AID PROJECT

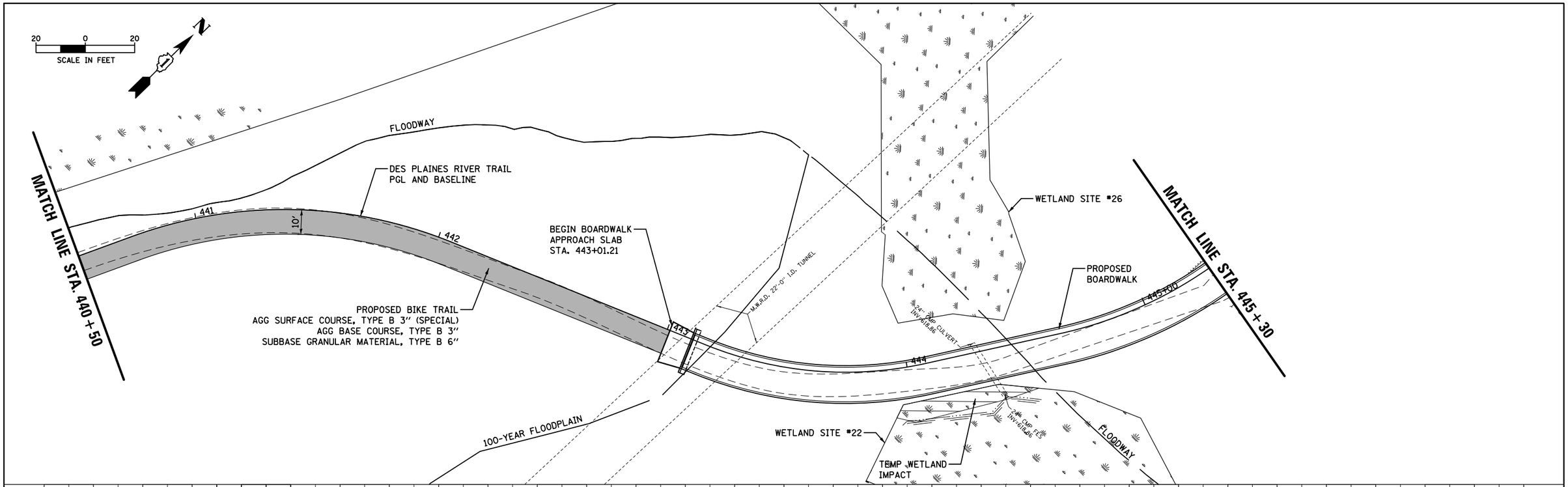

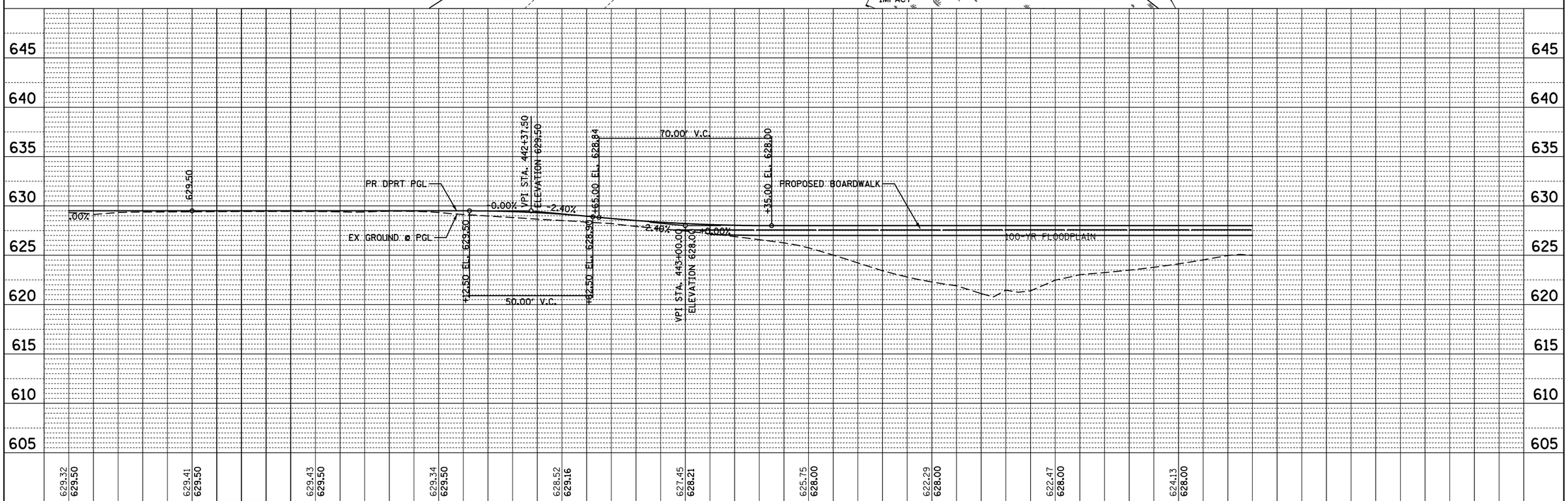

PLAN
SURVEYED
PLOTTED
ALIGNMENT CHECKED
RT. OF WAY CHECKED
CADD FILE NAME
NOTE BOOK
NO.
BY
DATE

PROFILE
SURVEYED
PLOTTED
GRADES CHECKED
BKM. NOTED
STRUCTURE NOTATIONS CHKD
NOTE BOOK
NO.
BY
DATE

FILE NAME = N:\SCHILLERPARK\230454\Civil\RPP_230454.08.SHT	USER NAME = mthomas	DESIGNED -	REVISED -
		DRAWN -	REVISED -
	PLOT SCALE = 40'	CHECKED -	REVISED -
Default	PLOT DATE = 9/6/2024	DATE -	REVISED -

STATE OF ILLINOIS
DEPARTMENT OF TRANSPORTATION

DES PLAINES RIVER TRAIL – SEGMENT 4
PLAN AND PROFILE

SCALE: 1:40 | SHEET OF 86 SHEETS | STA. TO STA.

F.A. RTE.	SECTION	COUNTY	TOTAL SHEETS	SHEET NO.
N/A	17-00034-05-BT	COOK	86	30
		CONTRACT NO. 61K54		
		ILLINOIS FED. AID PROJECT		

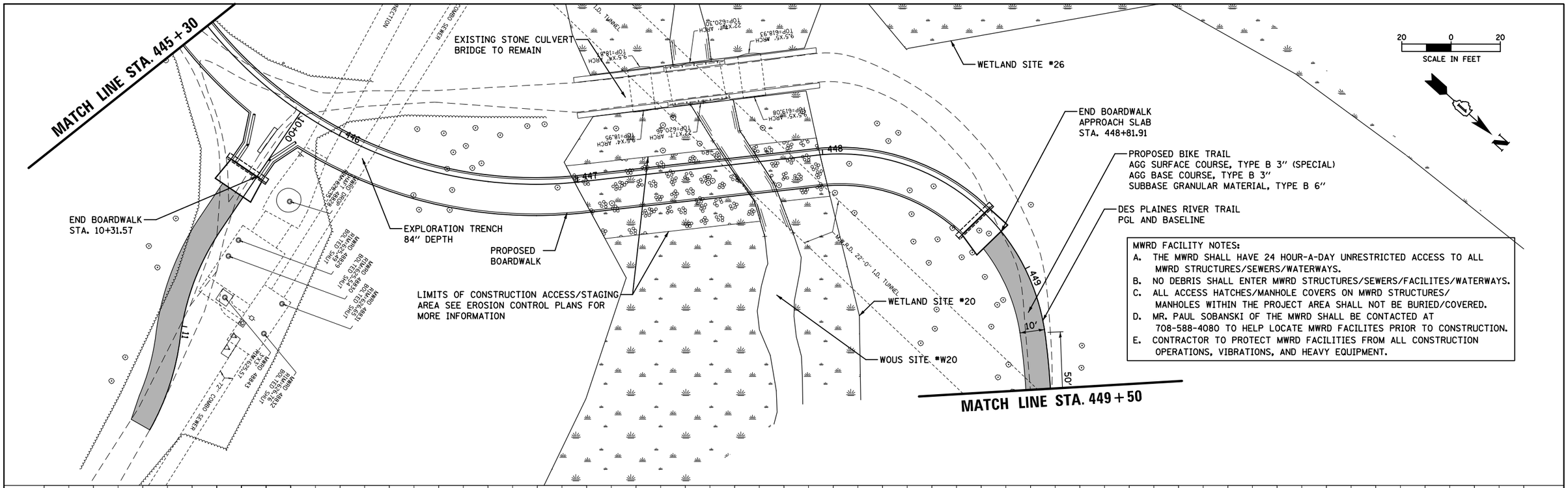

MWRD FACILITY NOTES:

A. THE MWRD SHALL HAVE 24 HOUR-A-DAY UNRESTRICTED ACCESS TO ALL MWRD STRUCTURES/SEWERS/WATERWAYS.
B. NO DEBRIS SHALL ENTER MWRD STRUCTURES/SEWERS/FACILITES/WATERWAYS.
C. ALL ACCESS HATCHES/MANHOLE COVERS ON MWRD STRUCTURES/ MANHOLES WITHIN THE PROJECT AREA SHALL NOT BE BURIED/COVERED.
D. MR. PAUL SOBANSKI OF THE MWRD SHALL BE CONTACTED AT 708-588-4080 TO HELP LOCATE MWRD FACILITES PRIOR TO CONSTRUCTION.
E. CONTRACTOR TO PROTECT MWRD FACILITIES FROM ALL CONSTRUCTION OPERATIONS, VIBRATIONS, AND HEAVY EQUIPMENT.

PLAN		BY	DATE
	SURVEYED		
	PLOTTED		
	ALIGNMENT CHECKED		
	RT. OF WAY CHECKED		
NOTE BOOK NO.____	CADD FILE NAME		

PROFILE		BY	DATE
	SURVEYED		
	PLOTTED		
	GRADES CHECKED		
NOTE BOOK NO.____	B.M. NOTED		
	STRUCTURE NOTATNS CHKD		

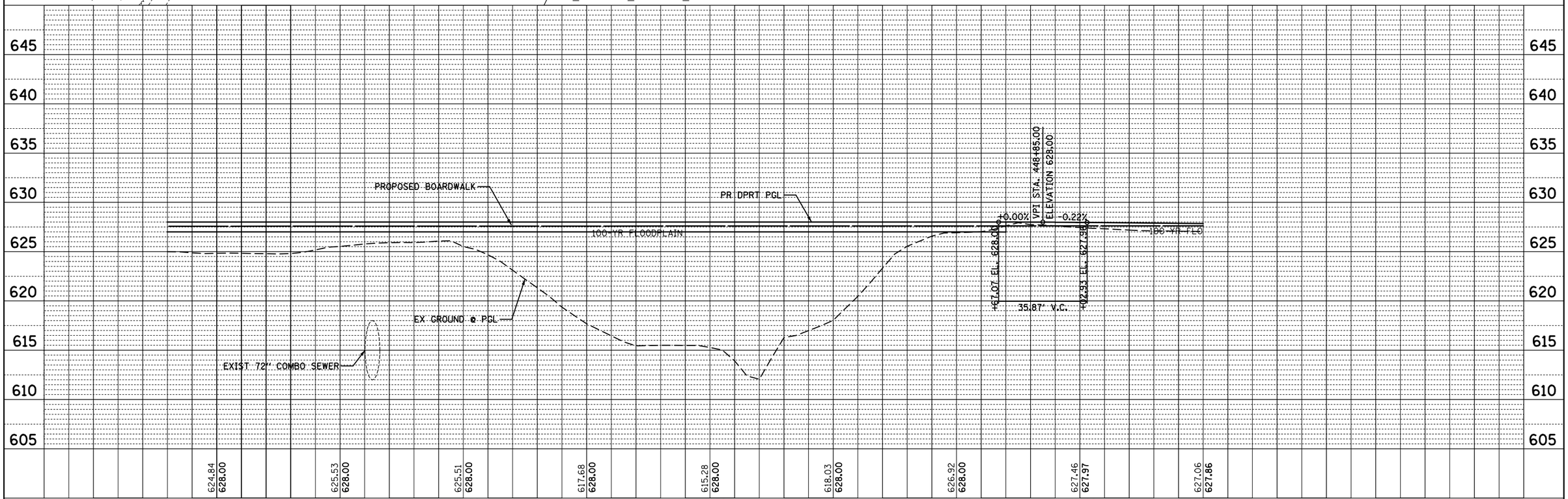

FILE NAME = N:\SCHILLERPARK\230454\Civil\RPP_230454.0PR.SHT	USER NAME = mthomas	DESIGNED -	REVISED -
Default		DRAWN -	REVISED -
	PLOT SCALE = 40'	CHECKED -	REVISED -
	PLOT DATE = 9/6/2024	DATE -	REVISED -

STATE OF ILLINOIS
DEPARTMENT OF TRANSPORTATION

DES PLAINES RIVER TRAIL – SEGMENT 4
PLAN AND PROFILE

SCALE: 1:40 | SHEET OF 86 SHEETS | STA. TO STA.

F.A. RTE.	SECTION	COUNTY	TOTAL SHEETS	SHEET NO.
N/A	17-00034-05-BT	COOK	86	31

CONTRACT NO. 61K54

ILLINOIS FED. AID PROJECT

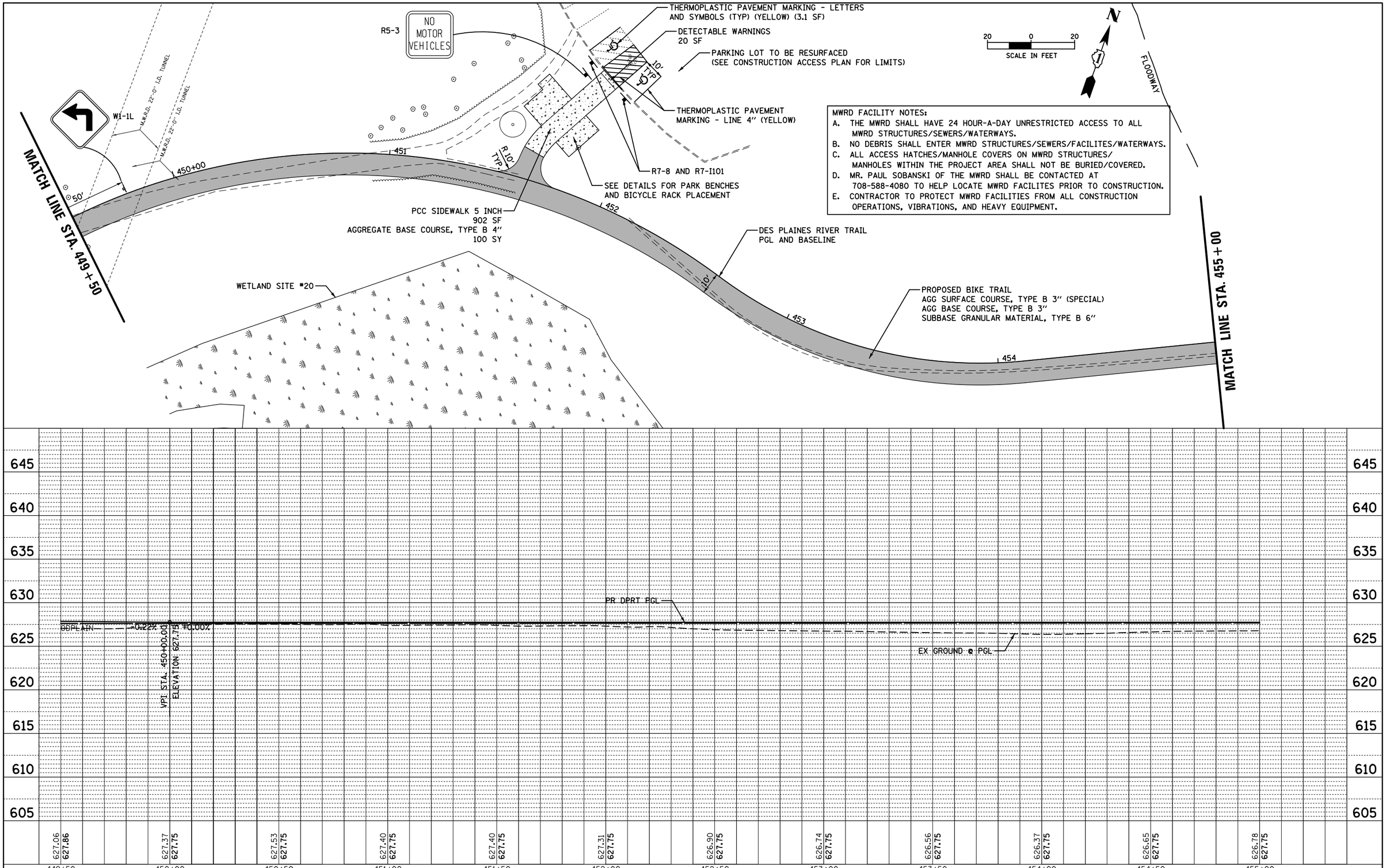

FILE NAME = N:\SCHILLERPARK\230454\Civil\RPP_230454_10.SHT	USER NAME = mthomas	DESIGNED -	REVISED -
		DRAWN -	REVISED -
Default	PLOT SCALE = 40'	CHECKED -	REVISED -
	PLOT DATE = 9/6/2024	DATE -	REVISED -

STATE OF ILLINOIS
DEPARTMENT OF TRANSPORTATION

DES PLAINES RIVER TRAIL – SEGMENT 4

PLAN AND PROFILE

SCALE: 1:40 | SHEET OF 86 SHEETS | STA. TO STA.

F.A. RTE.	SECTION	COUNTY	TOTAL SHEETS	SHEET NO.
N/A	17-00034-05-BT	COOK	86	32

CONTRACT NO. 61K54

ILLINOIS FED. AID PROJECT

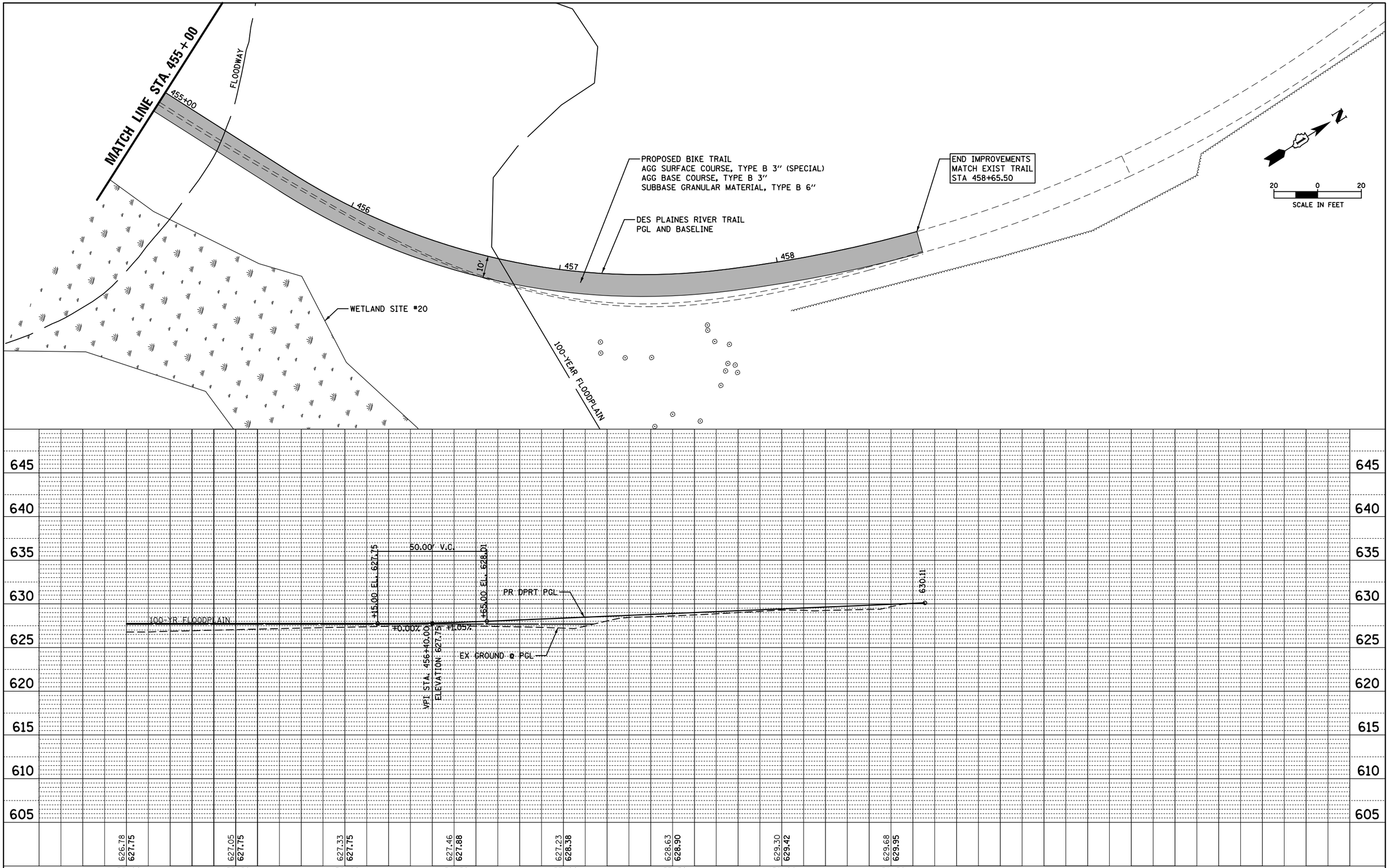

PLAN		BY	DATE
NOTE BOOK NO. ____	SURVEYED		
	PLOTTED		
	ALIGNMENT CHECKED		
	RT. OF WAY CHECKED		
	CADD FILE NAME		

PROFILE		BY	DATE
NOTE BOOK NO. ____	SURVEYED		
	PLOTTED		
	GRADES CHECKED		
	BRK. NOTED		
	STRUCTURE NOTATNS CHKD		

FILE NAME = N:\SCHILLERPARK\230454\Civil\RPP_230454_11.SHT	USER NAME = mthomas	DESIGNED -	REVISED -
		DRAWN -	REVISED -
	PLOT SCALE = 40'	CHECKED -	REVISED -
Default	PLOT DATE = 9/6/2024	DATE -	REVISED -

STATE OF ILLINOIS
DEPARTMENT OF TRANSPORTATION

DES PLAINES RIVER TRAIL – SEGMENT 4
PLAN AND PROFILE

SCALE: 1:40 | SHEET OF 86 SHEETS | STA. TO STA.

F.A. RTE.	SECTION	COUNTY	TOTAL SHEETS	SHEET NO.
N/A	17-00034-05-BT	COOK	86	33

CONTRACT NO. 61K54

ILLINOIS FED. AID PROJECT

MWRD FACILITY NOTES:

A. THE MWRD SHALL HAVE 24 HOUR-A-DAY UNRESTRICTED ACCESS TO ALL MWRD STRUCTURES/SEWERS/WATERWAYS.
B. NO DEBRIS SHALL ENTER MWRD STRUCTURES/SEWERS/FACILITES/WATERWAYS.
C. ALL ACCESS HATCHES/MANHOLE COVERS ON MWRD STRUCTURES/ MANHOLES WITHIN THE PROJECT AREA SHALL NOT BE BURIED/COVERED.
D. MR. PAUL SOBANSKI OF THE MWRD SHALL BE CONTACTED AT 708-588-4080 TO HELP LOCATE MWRD FACILITES PRIOR TO CONSTRUCTION.
E. CONTRACTOR TO PROTECT MWRD FACILITIES FROM ALL CONSTRUCTION OPERATIONS, VIBRATIONS, AND HEAVY EQUIPMENT.

20 0 20
SCALE IN FEET

N

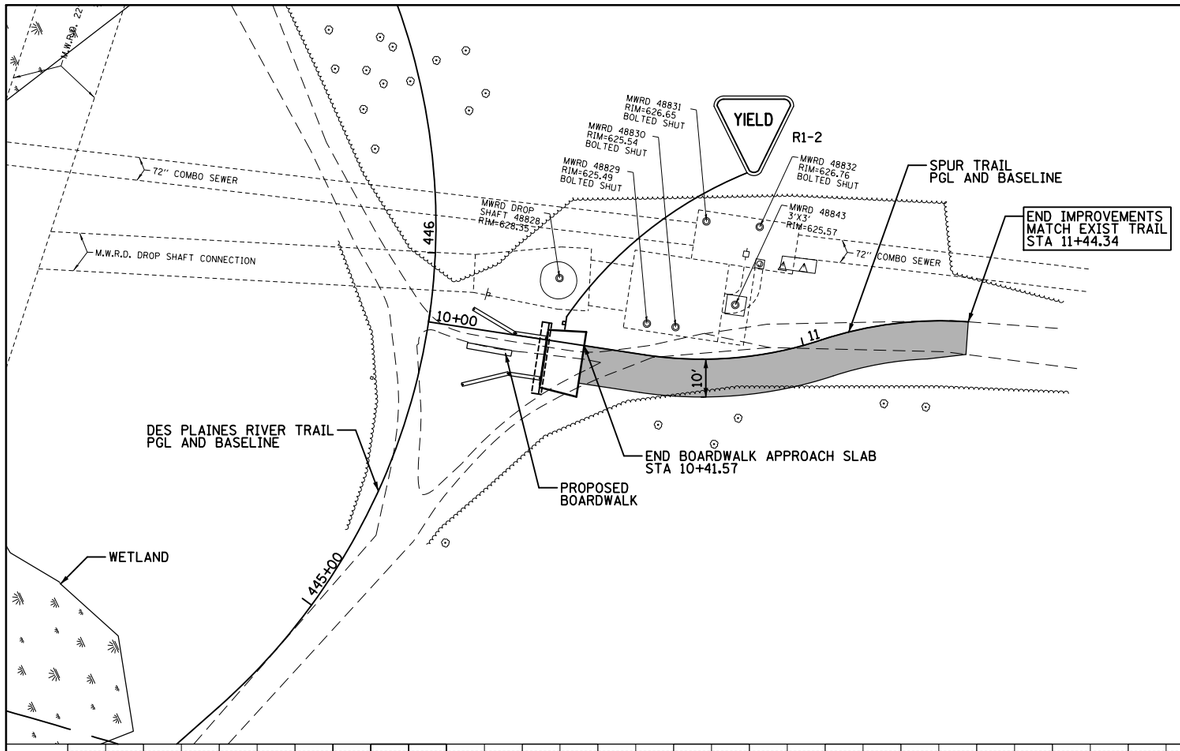

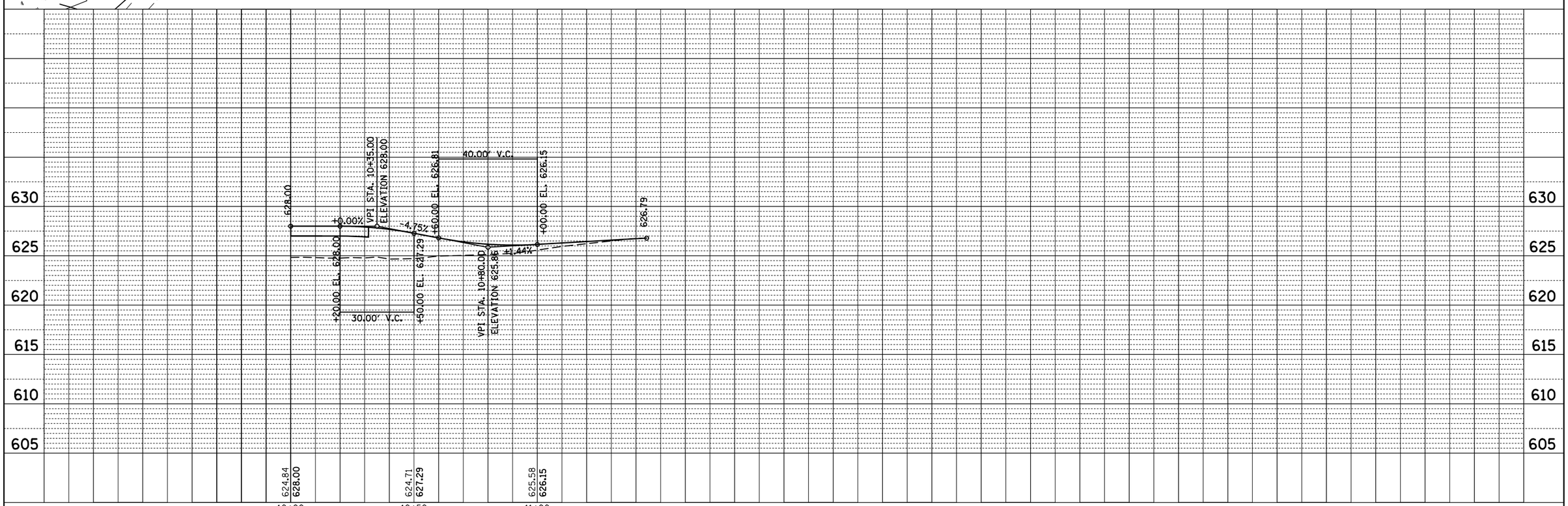

PLAN
SURVEYED
PLOTTED
ALIGNMENT CHECKED
RT. OF WAY CHECKED
CADD FILE NAME
NOTE BOOK NO.
BY
DATE

PROFILE
SURVEYED
PLOTTED
GRADES CHECKED
B.M. NOTED
STRUCTURE NOTATIONS CHKD
NOTE BOOK NO.
BY
DATE

FILE NAME = N:\SCHILLERPARK\230454\Civil\RPP_230454_12.SHT	USER NAME = mthomas	DESIGNED -	REVISED -
		DRAWN -	REVISED -
	PLOT SCALE = 40'	CHECKED -	REVISED -
Default	PLOT DATE = 9/6/2024	DATE -	REVISED -

STATE OF ILLINOIS
DEPARTMENT OF TRANSPORTATION

DES PLAINES RIVER TRAIL – SEGMENT 4
PLAN AND PROFILE

SCALE: 1:40 | SHEET OF 86 SHEETS | STA. TO STA.

F.A. RTE.	SECTION	COUNTY	TOTAL SHEETS	SHEET NO.
N/A	17-00034-05-BT	COOK	86	34
		CONTRACT NO. 61K54		
		ILLINOIS FED. AID PROJECT		

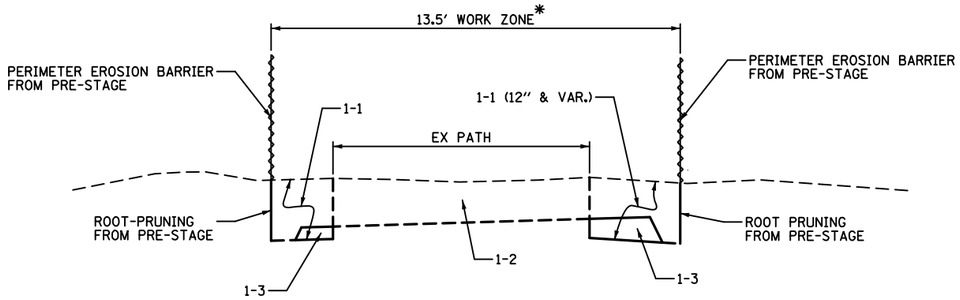

STAGE 1

* 13.5′ WORK ZONE WILL BE STRICTLY ENFORCED
CONTRACTOR SHALL BID ACCORDINGLY

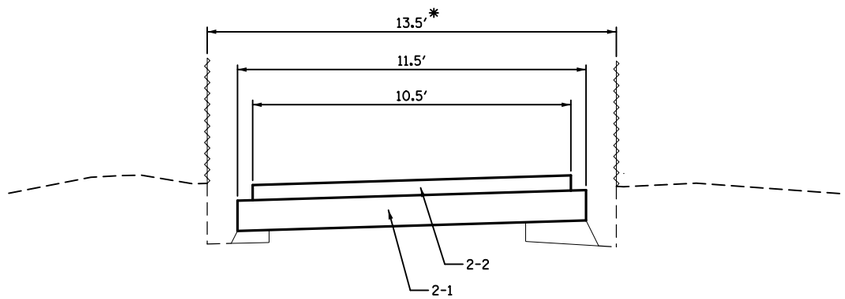

STAGE 2

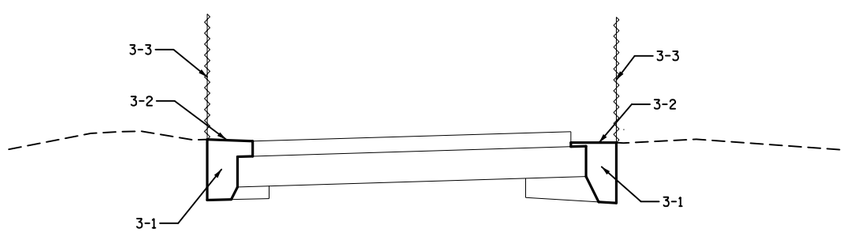

STAGE 3

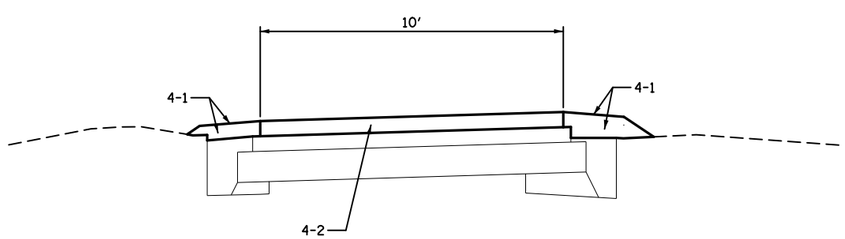

STAGE 4

CONSTRUCTION STAGING DETAILS

PRE-STAGE

A. SET ALIGNMENT STAKES

B. CONTRACTOR'S PROFESSIONAL ARBORIST AND FOREST PRESERVE DISTRICT OF COOK COUNTY (FPDCC) ARBORIST WALK CONSTRUCTION SITE AND DETERMINE LOCATIONS FOR TREE PROTECTION ZONE AS DEFINED BY THE FPDCC TREE PROTECTION AND PRESERVATION MANUAL AND THE PROJECT SPECIFICATIONS. IN ADDITION, DETERMINE LOCATIONS FOR TREE ROOT PRUNING, TREE PRUNING, TREE ROOT PROTECTION (SPECIAL), AND TREE REMOVAL. PRIOR TO THE WALKTHROUGH, THE CONTRACTOR SHALL LAY OUT THE TRAIL BASE LINE AND PROPOSED ROOT PRUNING LOCATIONS (INCLUDED IN THE COST OF TREE ROOT PRUNING (SPECIAL)).

C. REMOVE TREES THAT ARE AGREED UPON AS NECESSARY AND ACCEPTABLE TO THE ENGINEER, ARBORIST, AND CCFPD.

NOTE: TREE REMOVALS SHOWN IN THE PLANS ARE ESTIMATED. THE FPDCC AND ITS REPRESENTATIVES SHALL HAVE THE ULTIMATE AUTHORITY IN WHICH TREES ARE REMOVED. ANY TREES THAT ARE REMOVED OR DAMAGED WITHOUT PRIOR APPROVAL FROM THE FPDCC SHALL BE SUBJECT TO THE UNAUTHORIZED TREE REMOVAL SPECIAL PROVISION.

D. ROOT PRUNING TO BE PERFORMED BY PRE-QUALIFIED ARBORIST BASED ON PLAN DETAILS AND PRE-CONSTRUCTION WALK THROUGH

E. CONSTRUCT TREE ROOT PROTECTION UNDER THE DIRECTION OF THE ARBORIST.

F. INSTALL PERIMETER EROSION BARRIER IN ROOT PRUNING TRENCH 1.75′ FROM EDGE OF PROPOSED PATH CREATING A 13.5′ WIDE WORK ZONE CORRIDOR.

STAGE 1: EXCAVATION

1-1 REMOVE TOPSOIL FROM PERIMETER EROSION BARRIER TO EXISTING PATH (ASSUMED 0.5′ DEEP), HAUL AWAY AS UNSUITABLE MATERIAL.

1-2 EXCAVATE EXISTING PATH TO BOTTOM OF PROPOSED SUBBASE.

1-3 PLACE EMBANKMENT FROM EXISTING PATH EXCAVATION UNDER PROPOSED SUBGRADE AND COMPACT.

1-4 HAUL AWAY EXCESS EXCAVATION NOT USED AS EMBANKMENT UNDER PROPOSED SUBGRADE.

STAGE 2: PLACE AGGREGATE BASE FOR PATH

2-1 PLACE AGGREGATE SUBGRADE, 6″.

2-2 PLACE AGGREGATE BASE COURSE, TY. B, 3″.

STAGE 3: TEMPORARY EROSION CONTROL

3-1 BACKFILL REMAINING TRENCH WITH FURNISHED TOPSOIL TO EXISTING EXISTING GROUND ELEVATION AT THE PERIMETER EROSION BARRIER.

3-2 PLACE TEMPORARY SEEDING AND TEMP EROSION CONTROL BLANKET.

3-3 REMOVE PERIMETER EROSION BARRIER.

STAGE 4: PLACE SURFACE COURSE AND FINAL LANDSCAPING

4-1 PLACE FURNISHED OR STOCKPILED TOPSOIL TO FINISHED GRADE, PLACE FINAL SEEDING, AND INSTALL EROSION CONTROL BLANKET. NO TOPSOIL SHALL REMAIN UNBLANKETED AT THE END OF A WORK DAY.

4-2 PLACE AGGREGATE SURFACE COURSE, 3″.

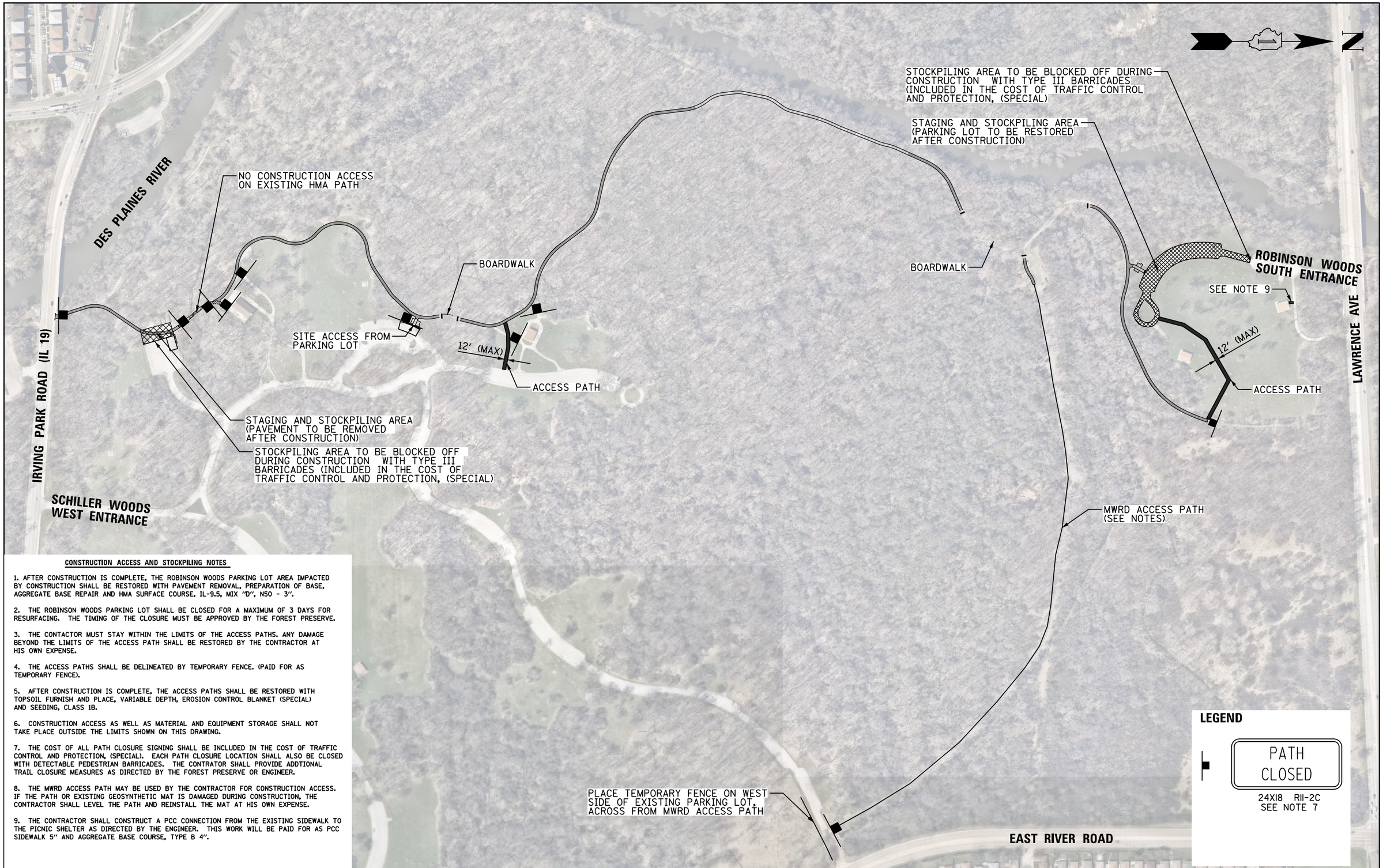

CONSTRUCTION ACCESS AND STOCKPILING NOTES

1. AFTER CONSTRUCTION IS COMPLETE, THE ROBINSON WOODS PARKING LOT AREA IMPACTED BY CONSTRUCTION SHALL BE RESTORED WITH PAVEMENT REMOVAL, PREPARATION OF BASE, AGGREGATE BASE REPAIR AND HMA SURFACE COURSE, IL-9.5, MIX "D", N50 - 3".

2. THE ROBINSON WOODS PARKING LOT SHALL BE CLOSED FOR A MAXIMUM OF 3 DAYS FOR RESURFACING. THE TIMING OF THE CLOSURE MUST BE APPROVED BY THE FOREST PRESERVE.

3. THE CONTACTOR MUST STAY WITHIN THE LIMITS OF THE ACCESS PATHS. ANY DAMAGE BEYOND THE LIMITS OF THE ACCESS PATH SHALL BE RESTORED BY THE CONTRACTOR AT HIS OWN EXPENSE.

4. THE ACCESS PATHS SHALL BE DELINEATED BY TEMPORARY FENCE. (PAID FOR AS TEMPORARY FENCE).

5. AFTER CONSTRUCTION IS COMPLETE, THE ACCESS PATHS SHALL BE RESTORED WITH TOPSOIL FURNISH AND PLACE, VARIABLE DEPTH, EROSION CONTROL BLANKET (SPECIAL) AND SEEDING, CLASS 1B.

6. CONSTRUCTION ACCESS AS WELL AS MATERIAL AND EQUIPMENT STORAGE SHALL NOT TAKE PLACE OUTSIDE THE LIMITS SHOWN ON THIS DRAWING.

7. THE COST OF ALL PATH CLOSURE SIGNING SHALL BE INCLUDED IN THE COST OF TRAFFIC CONTROL AND PROTECTION, (SPECIAL). EACH PATH CLOSURE LOCATION SHALL ALSO BE CLOSED WITH DETECTABLE PEDESTRIAN BARRICADES. THE CONTRATOR SHALL PROVIDE ADDTIONAL TRAIL CLOSURE MEASURES AS DIRECTED BY THE FOREST PRESERVE OR ENGINEER.

8. THE MWRD ACCESS PATH MAY BE USED BY THE CONTRACTOR FOR CONSTRUCTION ACCESS. IF THE PATH OR EXISTING GEOSYNTHETIC MAT IS DAMAGED DURING CONSTRUCTION, THE CONTRACTOR SHALL LEVEL THE PATH AND REINSTALL THE MAT AT HIS OWN EXPENSE.

9. THE CONTRACTOR SHALL CONSTRUCT A PCC CONNECTION FROM THE EXISTING SIDEWALK TO THE PICNIC SHELTER AS DIRECTED BY THE ENGINEER. THIS WORK WILL BE PAID FOR AS PCC SIDEWALK 5" AND AGGREGATE BASE COURSE, TYPE B 4".

FILE NAME =	USER NAME = mthomas	DESIGNED -	REVISED -
N:\SCHILLERPARK\230454\Civil\STOCK_230454_01.SHT		DRAWN -	REVISED -
	PLOT SCALE = 320'	CHECKED -	REVISED -
Default	PLOT DATE = 9/6/2024	DATE -	REVISED -

STATE OF ILLINOIS
DEPARTMENT OF TRANSPORTATION

DES PLAINES RIVER TRAIL – SEGMENT 4
STOCKPILE AND CONSTRUCTION ACCESS PLAN

SCALE: 1:320 | SHEET OF SHEETS | STA. TO STA.

F.A. RTE.	SECTION	COUNTY	TOTAL SHEETS	SHEET NO.
N/A	17-00034-05-BT	COOK	86	36
		CONTRACT NO. 61K54		
	ILLINOIS	FED. AID PROJECT		

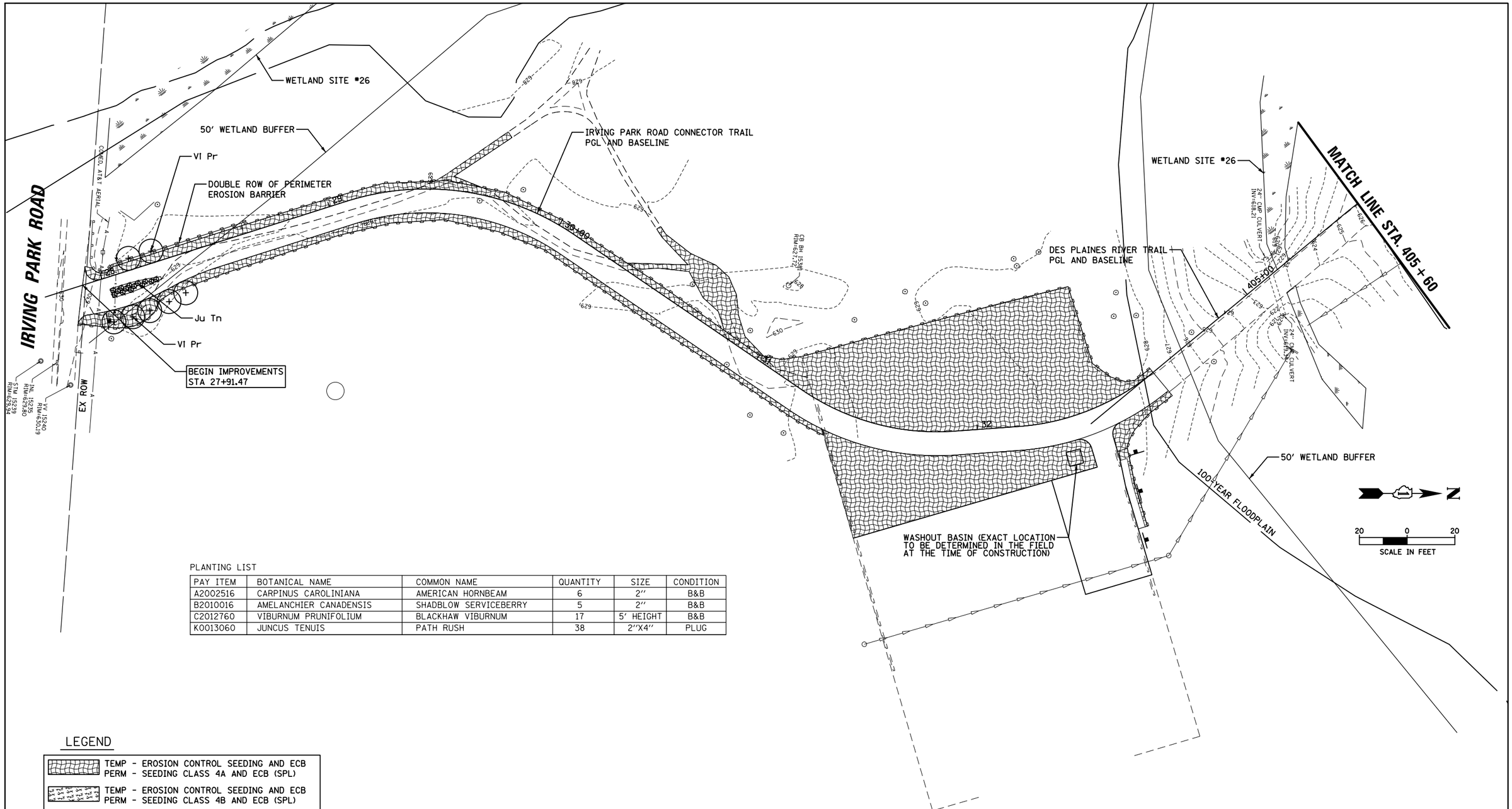

PLANTING LIST

PAY ITEM	BOTANICAL NAME	COMMON NAME	QUANTITY	SIZE	CONDITION
A2002516	CARPINUS CAROLINIANA	AMERICAN HORNBEAM	6	2"	B&B
B2010016	AMELANCHIER CANADENSIS	SHADBLOW SERVICEBERRY	5	2"	B&B
C2012760	VIBURNUM PRUNIFOLIUM	BLACKHAW VIBURNUM	17	5' HEIGHT	B&B
K0013060	JUNCUS TENUIS	PATH RUSH	38	2"X4"	PLUG

LEGEND

- TEMP - EROSION CONTROL SEEDING AND ECB
  PERM - SEEDING CLASS 4A AND ECB (SPL)
- TEMP - EROSION CONTROL SEEDING AND ECB
  PERM - SEEDING CLASS 4B AND ECB (SPL)
- TEMP - EROSION CONTROL SEEDING AND ECB
  PERM - SEEDING CLASS 1B AND ECB (SPL)
- INLET PROTECTION (PAID FOR AS PERIMETER EROSION BARRIER)
- PERIMETER EROSION BARRIER
- PERIMETER EROSION BARRIER (SPECIAL)
- EXISTING WETLAND
- 100-YEAR FLOODPLAIN

FILE NAME = N:\SCHILLERPARK\230454\Civil\ECP_230454 01.SHT	USER NAME = mthomas	DESIGNED -	REVISED -	STATE OF ILLINOIS DEPARTMENT OF TRANSPORTATION	DES PLAINES RIVER TRAIL – SEGMENT 4	F.A. RTE.	SECTION	COUNTY	TOTAL SHEETS	SHEET NO.
		DRAWN -	REVISED -		EROSION CONTROL PLAN	N/A	17-00034-05-BT	COOK	86	37
	PLOT SCALE = 40'	CHECKED -	REVISED -					CONTRACT NO. 61K54		
Default	PLOT DATE = 9/6/2024	DATE -	REVISED -		SCALE: 1:40 SHEET OF SHEETS STA. TO STA.		ILLINOIS	FED. AID PROJECT		

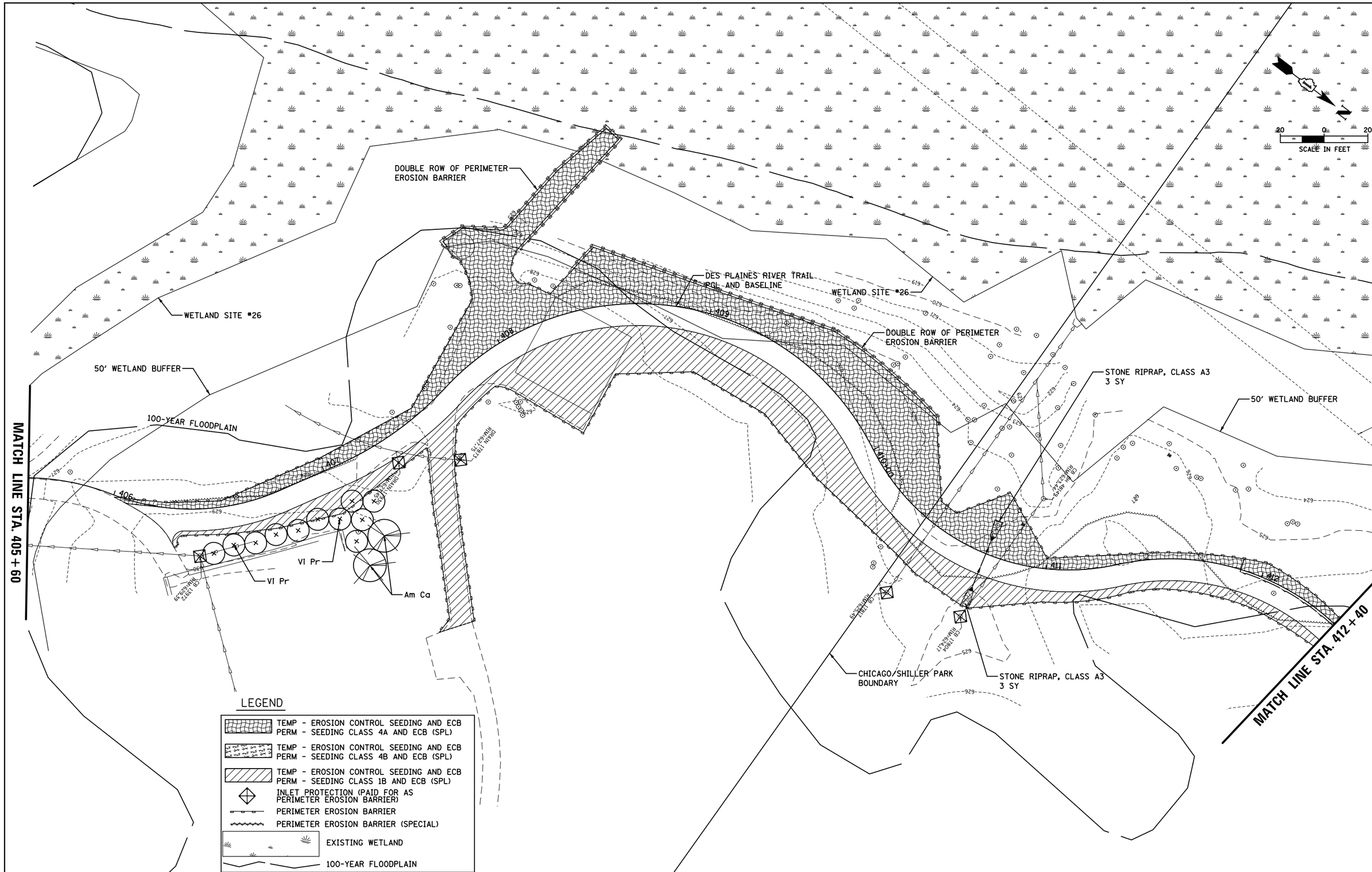

FILE NAME = N:\SCHILLERPARK\230454\Civil\ECP_230454_02.SHT	USER NAME = mthomas	DESIGNED -	REVISED -
	PLOT SCALE = 40'	DRAWN -	REVISED -
Default	PLOT DATE = 9/6/2024	CHECKED -	REVISED -
		DATE -	REVISED -

STATE OF ILLINOIS
DEPARTMENT OF TRANSPORTATION

DES PLAINES RIVER TRAIL – SEGMENT 4

EROSION CONTROL PLAN

SCALE: 1:40 | SHEET OF SHEETS | STA. TO STA.

F.A. RTE.	SECTION	COUNTY	TOTAL SHEETS	SHEET NO.
N/A	17-00034-05-BT	COOK	86	38

CONTRACT NO. 61K54

ILLINOIS FED. AID PROJECT

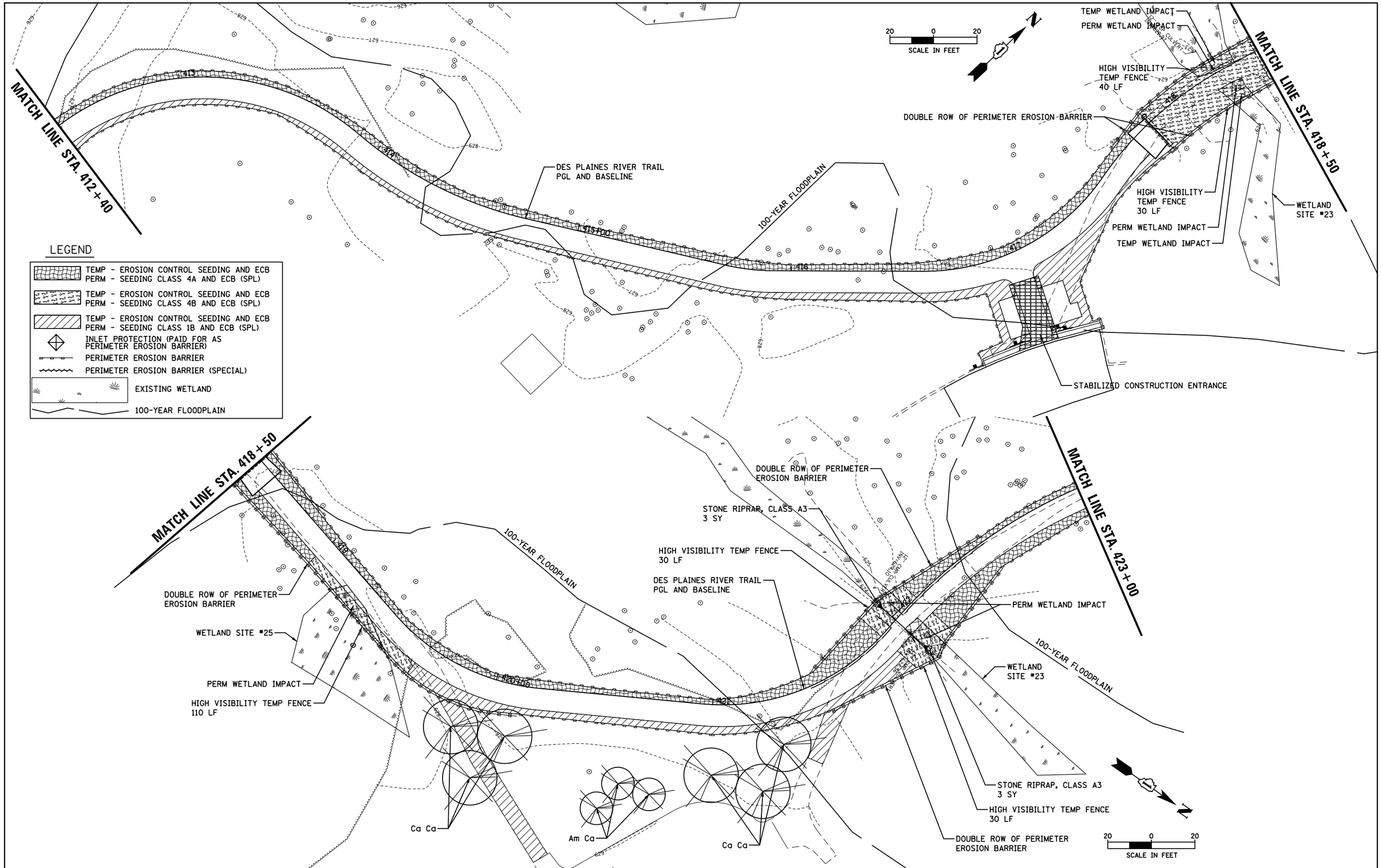

FILE NAME =	USER NAME = mthomas	DESIGNED -	REVISED -
N:\SCHILLERPARK\230454\Civil\ECP_230454 03.SHT		DRAWN -	REVISED -
	PLOT SCALE = 40'	CHECKED -	REVISED -
Default	PLOT DATE = 9/6/2024	DATE -	REVISED -

STATE OF ILLINOIS
DEPARTMENT OF TRANSPORTATION

DES PLAINES RIVER TRAIL – SEGMENT 4

EROSION CONTROL PLAN

SCALE: 1:40 | SHEET OF SHEETS | STA. TO STA.

F.A. RTE.	SECTION	COUNTY	TOTAL SHEETS	SHEET NO.
N/A	17-00034-05-BT	COOK	86	39

CONTRACT NO. 61K54

ILLINOIS FED. AID PROJECT

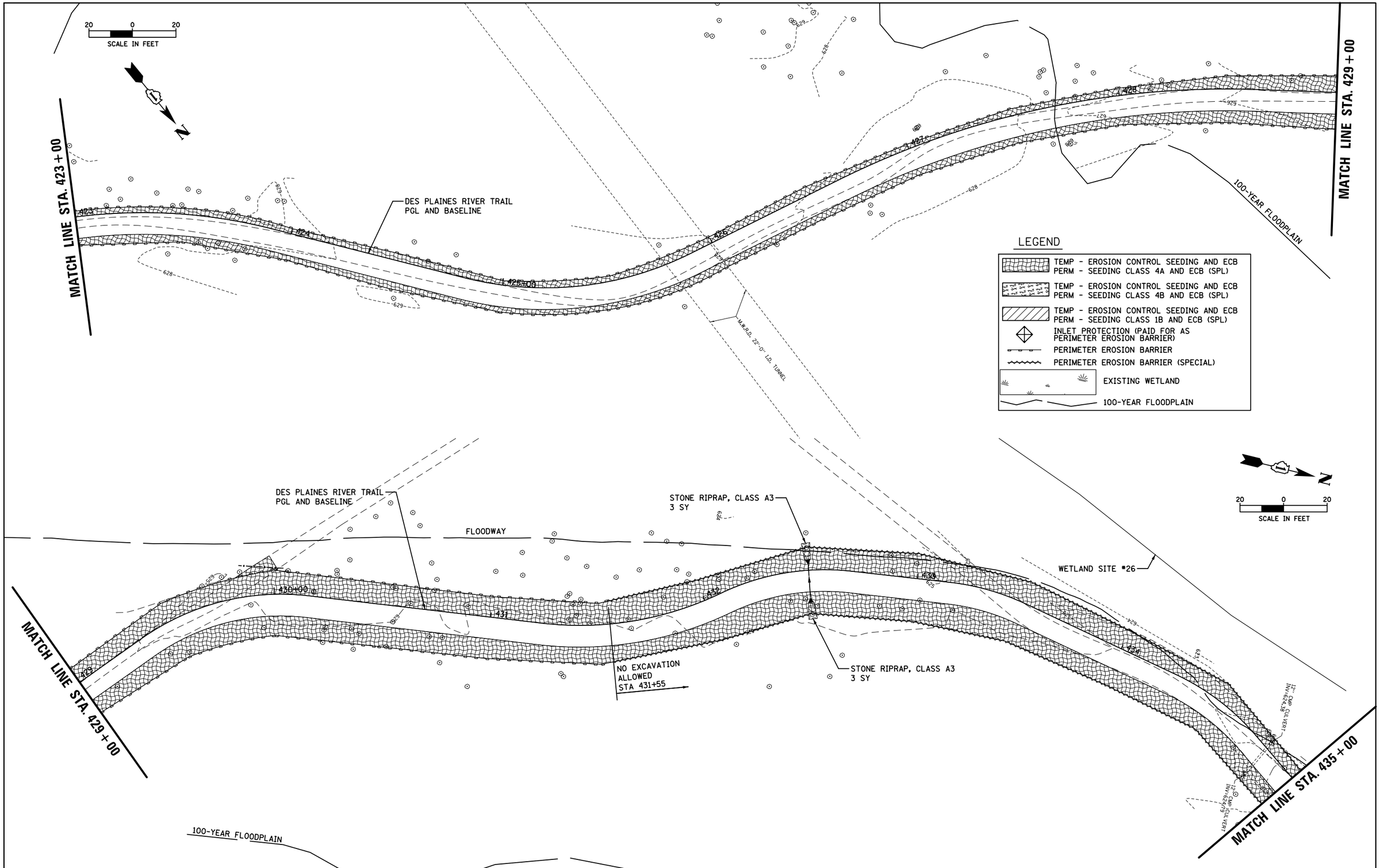

FILE NAME = N:\SCHILLERPARK\230454\Civil\ECP_230454_04.SHT	USER NAME = mthomas	DESIGNED -	REVISED -	STATE OF ILLINOIS DEPARTMENT OF TRANSPORTATION	DES PLAINES RIVER TRAIL – SEGMENT 4	F.A. RTE.	SECTION	COUNTY	TOTAL SHEETS / SHEET NO.
	PLOT SCALE = 40'	CHECKED -	REVISED -		EROSION CONTROL PLAN	N/A	17-00034-05-BT	COOK	86 / 40
Default	PLOT DATE = 9/6/2024	DATE -	REVISED -		SCALE: 1:40 SHEET OF SHEETS STA. TO STA.		CONTRACT NO. 61K54		
							ILLINOIS FED. AID PROJECT		

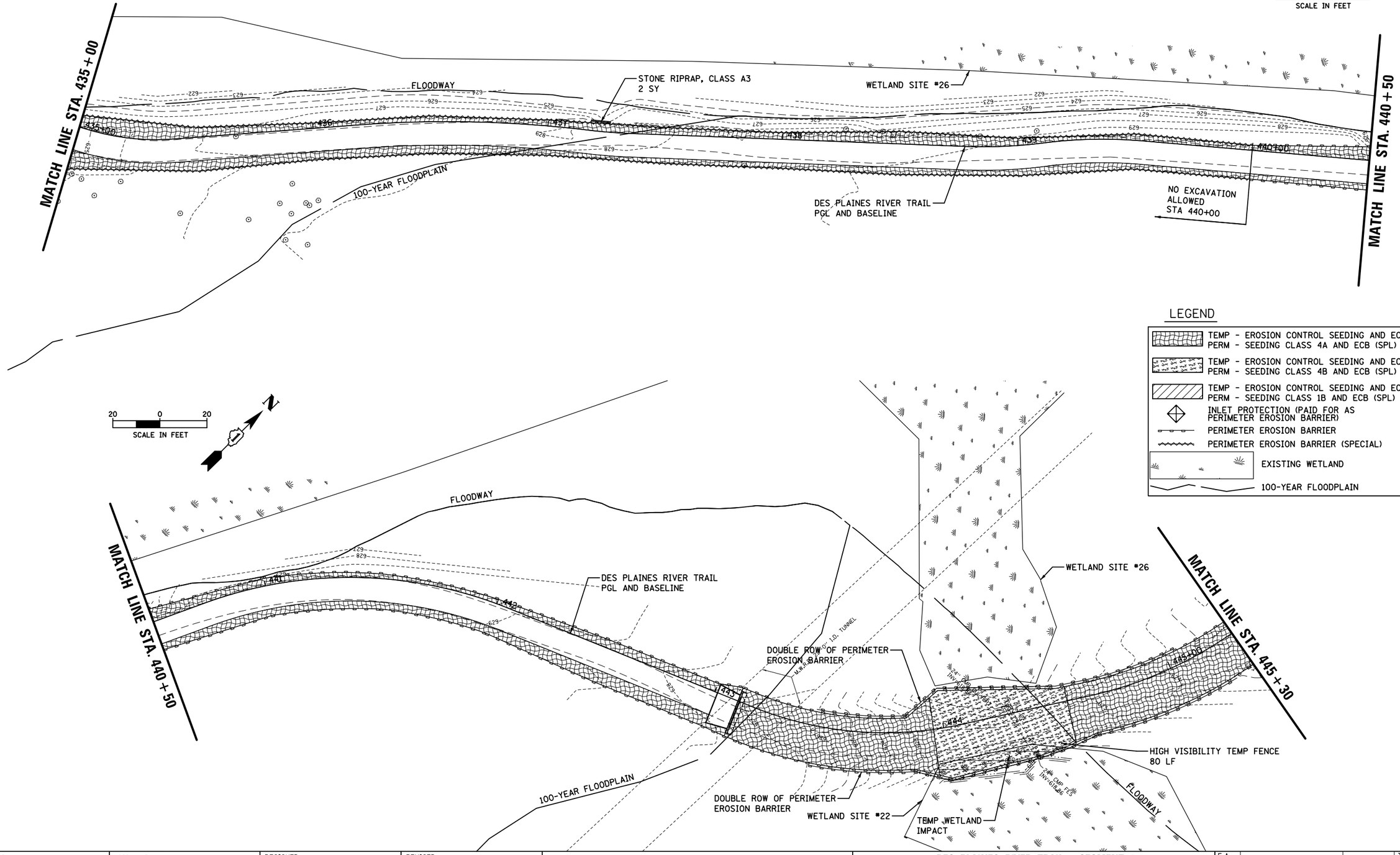

FILE NAME = N:\SCHILLERPARK\230454\Civil\ECP_230454_05.SHT	USER NAME = mthomas	DESIGNED -	REVISED -
		DRAWN -	REVISED -
	PLOT SCALE = 40'	CHECKED -	REVISED -
Default	PLOT DATE = 9/6/2024	DATE -	REVISED -

STATE OF ILLINOIS
DEPARTMENT OF TRANSPORTATION

DES PLAINES RIVER TRAIL – SEGMENT 4

EROSION CONTROL PLAN

SCALE: 1:40 | SHEET OF SHEETS | STA. TO STA.

F.A. RTE.	SECTION	COUNTY	TOTAL SHEETS	SHEET NO.
N/A	17-00034-05-BT	COOK	86	41
		CONTRACT NO. 61K54		
		ILLINOIS FED. AID PROJECT		

MATCH LINE STA. 445+30

WETLAND PROTECTION (SEE NOTES)

APPROXIMATE LIMITS OF CONSTRUCTION ACCESS/STAGING AREA SEE WETLAND PROTECTION NOTES FOR MORE INFORMATION

WETLAND SITE #26

DOUBLE ROW OF PERIMETER EROSION BARRIER

DES PLAINES RIVER TRAIL PGL AND BASELINE

DOUBLE ROW OF PERIMETER EROSION BARRIER

HIGH VISIBILITY TEMP FENCE 178 LF

NO CONSTRUCTION TRAFFIC ALLOWED IN CREEK

HIGH VISIBILITY TEMP FENCE 94 LF

WETLAND SITE #20

WOUS SITE #W20

DOUBLE ROW OF PERIMETER EROSION BARRIER

MATCH LINE STA. 451+00

20 0 20
SCALE IN FEET

WETLAND PROTECTION NOTES:

1. CONTRACTOR TO PROVIDE CONSTRUCTION ACCESS/STAGING AREA WORK PLAN FOR ENGINEER REVIEW/APPROVAL PRIOR TO WORK IN WETLAND.
2. WETLAND AREAS MUST BE PROTECTED FROM CONSTRUCTION TRAFFIC BY A MATTING SYSTEM AND/OR LOW GROUND PRESSURE EQUIPMENT.
3. THE MATTING SYSTEM SHALL BE PAID FOR AS "TEMPORARY ACCESS ROAD".
4. SEE SPECIAL PROVISIONS FOR MORE INFORMATION.
5. AFTER REMOVAL OF THE MATS, ANY DAMAGED AREAS SHALL BE RESTORED WITH EROSION CONTROL BLANKET AND SEEDING, CLASS 4B.

LEGEND

- TEMP - EROSION CONTROL SEEDING AND ECB
  PERM - SEEDING CLASS 4A AND ECB (SPL)
- TEMP - EROSION CONTROL SEEDING AND ECB
  PERM - SEEDING CLASS 4B AND ECB (SPL)
- TEMP - EROSION CONTROL SEEDING AND ECB
  PERM - SEEDING CLASS 1B AND ECB (SPL)
- INLET PROTECTION (PAID FOR AS PERIMETER EROSION BARRIER)
- PERIMETER EROSION BARRIER
- PERIMETER EROSION BARRIER (SPECIAL)
- EXISTING WETLAND
- 100-YEAR FLOODPLAIN

FILE NAME = N:\SCHILLERPARK\230454\Civil\ECP_230454 06.SHT	USER NAME = mthomas	DESIGNED -	REVISED -	STATE OF ILLINOIS DEPARTMENT OF TRANSPORTATION	DES PLAINES RIVER TRAIL – SEGMENT 4 EROSION CONTROL PLAN	F.A. RTE.	SECTION	COUNTY	TOTAL SHEETS / SHEET NO.
		DRAWN -	REVISED -			N/A	17-00034-05-BT	COOK	86 / 42
	PLOT SCALE = 40'	CHECKED -	REVISED -			CONTRACT NO. 61K54			
Default	PLOT DATE = 9/6/2024	DATE -	REVISED -		SCALE: 1:40 SHEET OF SHEETS STA. TO STA.	ILLINOIS FED. AID PROJECT			

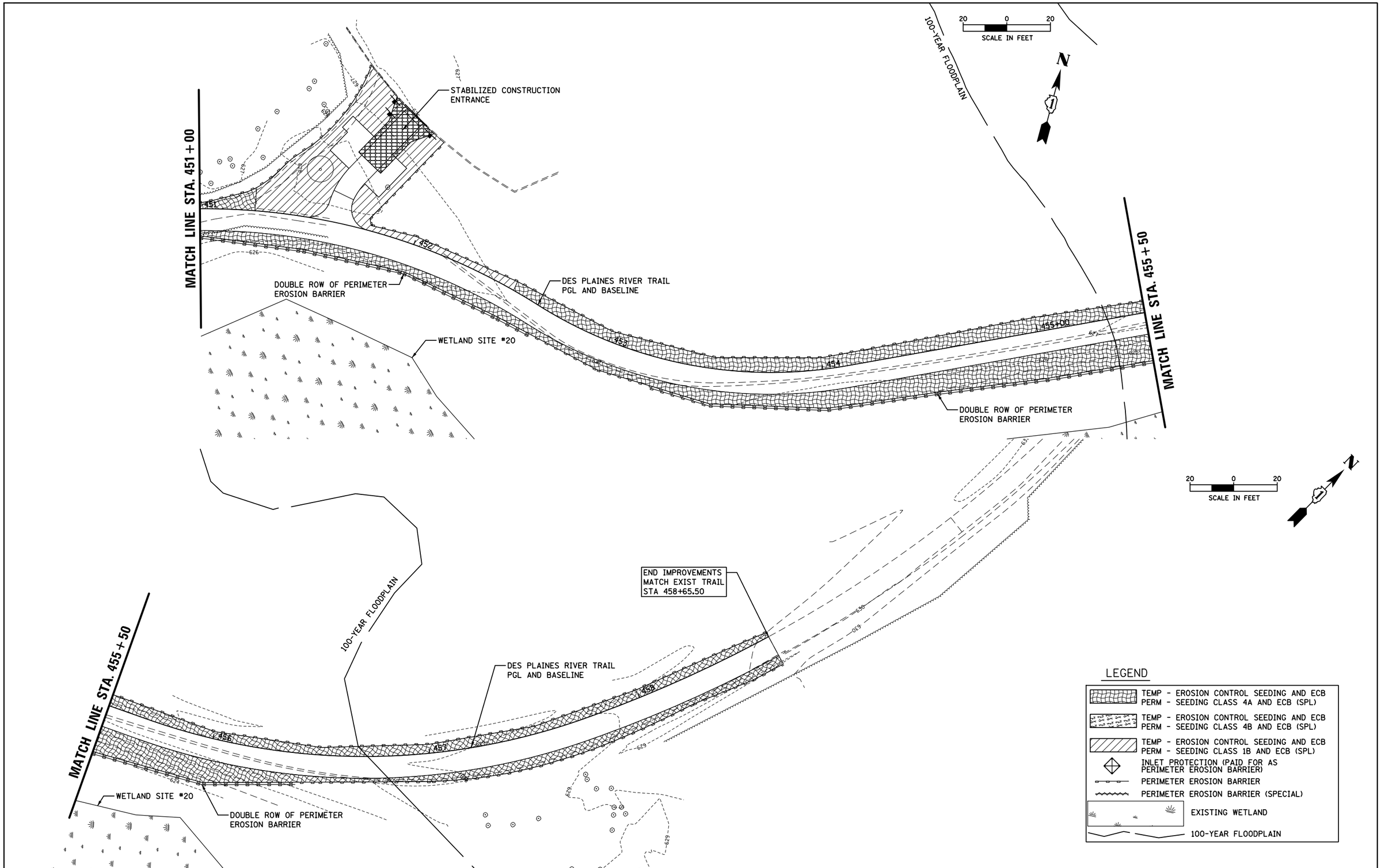

FILE NAME = N:\SCHILLERPARK\230454\Civil\ECP_230454_07.SHT	USER NAME = mthomas	DESIGNED -	REVISED -
		DRAWN -	REVISED -
	PLOT SCALE = 40'	CHECKED -	REVISED -
Default	PLOT DATE = 9/6/2024	DATE -	REVISED -

STATE OF ILLINOIS
DEPARTMENT OF TRANSPORTATION

DES PLAINES RIVER TRAIL – SEGMENT 4

EROSION CONTROL PLAN

SCALE: 1:40 | SHEET OF SHEETS | STA. TO STA.

F.A. RTE.	SECTION	COUNTY	TOTAL SHEETS	SHEET NO.
N/A	17-00034-05-BT	COOK	86	43

CONTRACT NO. 61K54

ILLINOIS FED. AID PROJECT

Benchmark: OSBM 7031 X-Cut on conc. walk at the Southwest corner of the intersection of Lawrence Avenue & the drive to Forest Preserve parking area just East of the Des Plaines River.

Existing Structure: None
Traffic Control: None
Salvage: None

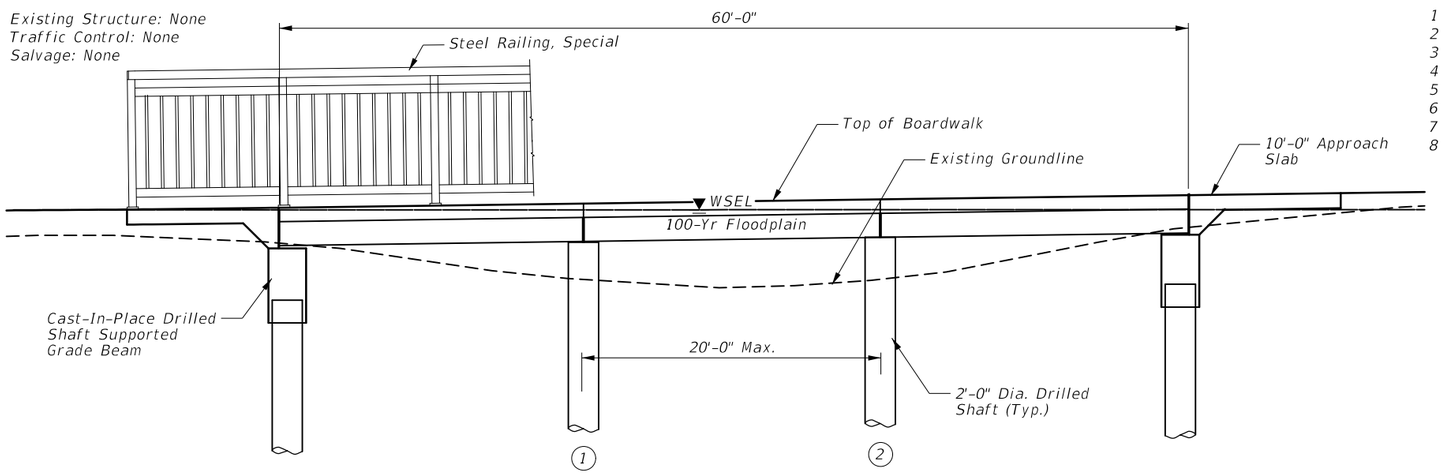

ELEVATION

INDEX OF SHEETS

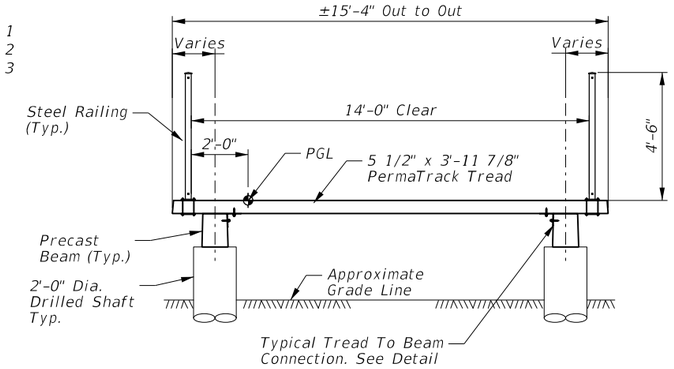

TYPICAL SECTION

SCOUR TABLE

Event / Limit	Design Scour Elevations (ft.)				
State	S. Abut.	Pier 1	Pier 2	N. Abut.	Item 113
Q100	625.60	621.03	620.53	626.20	8
Q200	625.60	620.87	620.37	626.20	
Design	625.60	621.03	620.53	626.20	

SEISMIC DATA

Seismic Performance Zone (SPZ) = 1
Design Spectral Acceleration at 1.0 sec. (SD1) = 0.086g
Design Spectral Acceleration at 0.2 sec. (SDS) = 0.144g
Soil Site Class = D

DESIGN STRESSES

FIELD UNITS

f'c = 3,500 psi (Substructure)
f'c = 4,000 psi (Drilled Shafts and Approaches)
fy = 60,000 psi (Reinforcement)

PRECAST UNITS

f'c = 4,500 psi

DESIGN LOADING

Unifom Live Load: 90 lb/sq. ft.
Vehicle Live Load: AASHTO H10

DESIGN SPECIFICATIONS

2020 AASHTO LRFD Bridge Design Specifications, 9th Edition
2009 AASHTO LRFD Guide Specifications for the Design of Pedestrian Bridge.

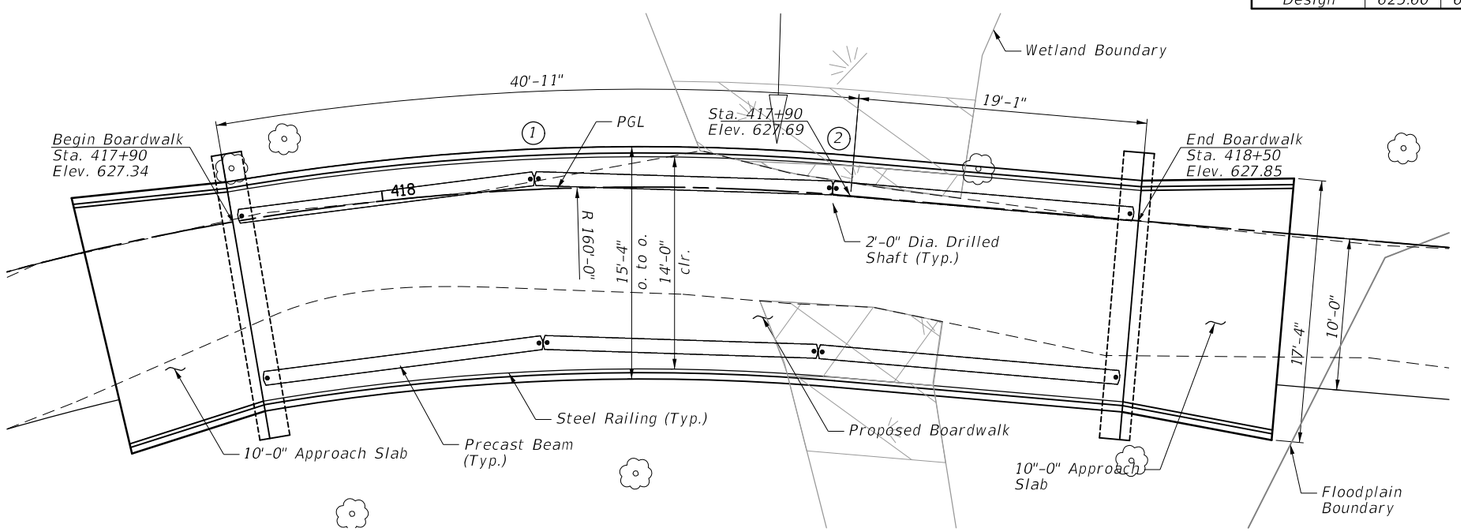

PLAN

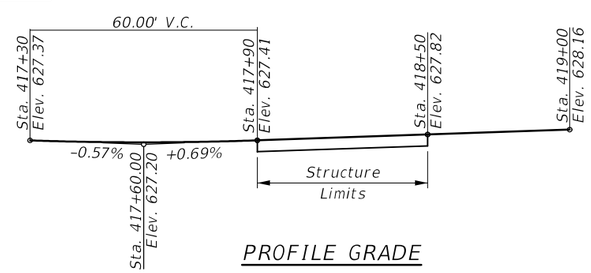

PROFILE GRADE
DESPLAINES RIVER TRAIL

WATERWAY INFORMATION

Drainage Area = 0.11 sq. mi. Low Grade Elev. 626.99 @ Sta. 417+50									
Flood	Freq. Yr.	Q C.F.S.	Opening Ft² Exist.	Opening Ft² Prop.	Nat. H.W.E.	Head - Ft. Exist.	Head - Ft. Prop.	Headwater El. Exist.	Headwater El. Prop.
	10	17	n/a	6	625.14	0.0	0.10	-	625.24
Design	30	24	n/a	7	625.22	0.0	0.12	-	625.34
Base	100	31	n/a	9	625.30	0.0	0.15	-	625.45
Overtopping	n/a	n/a	n/a	-	-	-	-	-	-
Max. Calc.	500	41	n/a	11	625.41	0.0	0.20	-	625.61

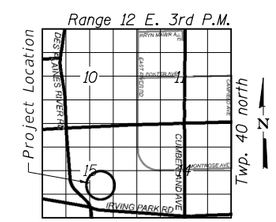

LOCATION SKETCH

STATE OF ILLINOIS
MAJID MOBASSERI
081-005058
CHAMPAIGN, ILLINOIS
LICENSED STRUCTURAL ENGINEER

MAJID MOBASSERI
ILLINOIS REGISTRATION No. 081-005058 STRUCTURAL ENGINEER
EXPIRATION DATE: 11/30/24

GENERAL PLAN & ELEVATION
DES PLAINES RIVER TRAIL
PROPOSED BOARDWALK
SECTION 17-00034-00-BT
COOK COUNTY
STA. 417+90.00 to STA. 418+50.00

FILE NAME = N:\SCHILLERPARK\230454\Struct\230454 - 01 - GPE1.dgn	USER NAME = mthomas	DESIGNED -	REVISED -	STATE OF ILLINOIS DEPARTMENT OF TRANSPORTATION
	PLOT SCALE = 10'	DRAWN -	REVISED -	
		CHECKED -	REVISED -	
Default	PLOT DATE = 9/6/2024	DATE -	REVISED -	

DES PLAINES RIVER TRAIL – SEGMENT 4
GENERAL PLAN AND ELEVATION 1

SCALE: 1:10 | SHEET OF SHEETS | STA. TO STA.

F.A. RTE.	SECTION	COUNTY	TOTAL SHEETS	SHEET NO.
N/A	17-00034-05-BT	COOK	86	44

CONTRACT NO. 61K54
ILLINOIS FED. AID PROJECT

Benchmark: OSBM-7031 X-cut on concrete walk at the southwest corner of the intersection of Lawrence Ave. and the drive to the East of the Des Plaines River. Elevation 628.77

Existing Structure: None

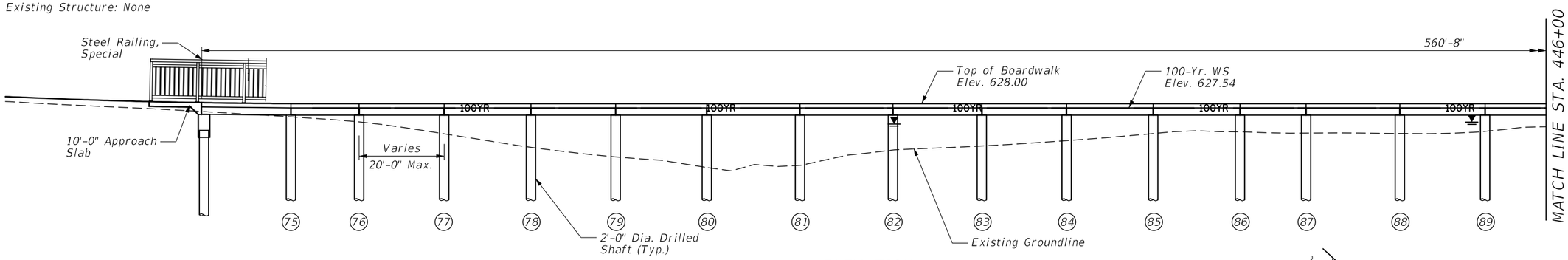

ELEVATION

WATERWAY INFORMATION

Drainage Area = 1.34 sq.mi. Low Grade Elev. 639.50 @ Sta. 447+00

Flood	Freq. Yr.	Q C.F.S.	Opening Ft² Exist.	Opening Ft² Prop.	Nat. H.W.E.	Head - Ft. Exist.	Head - Ft. Prop.	Headwater El. Exist.	Headwater El. Prop.
	10	219	-	245	617.8	-	0.0	-	617.8
Design	30	337	-	348	619.0	-	0.0	-	619.0
Base	100	435	-	447	620.1	-	0.0	-	620.1
Overtopping	n/a	n/a	-	n/a	n/a	-	n/a	-	-
Max. Calc.	500	651	-	849	622.4	-	0.0	-	622.4

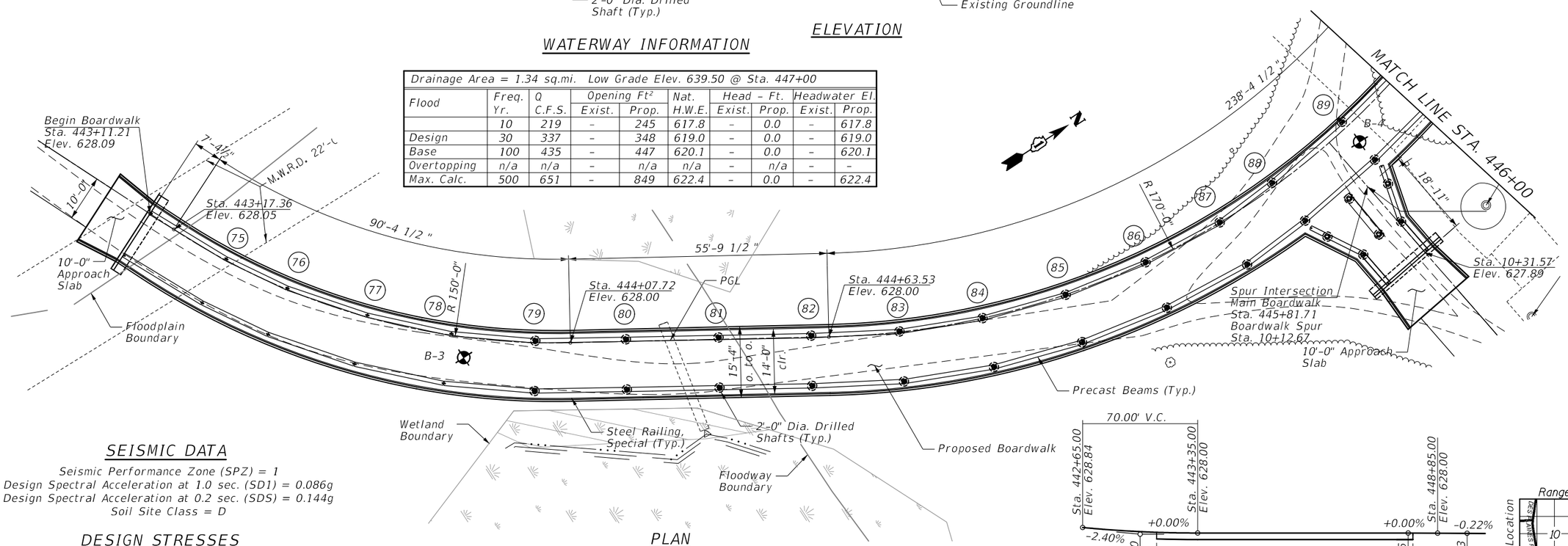

PLAN

SEISMIC DATA

Seismic Performance Zone (SPZ) = 1
Design Spectral Acceleration at 1.0 sec. (SD1) = 0.086g
Design Spectral Acceleration at 0.2 sec. (SDS) = 0.144g
Soil Site Class = D

DESIGN STRESSES

FIELD UNITS

f'c = 3,500 psi (Substructure)
f'c = 4,000 psi (Drilled Shafts and Approaches)
fy = 60,000 psi (Reinforcement)

PRECAST UNITS

f'c = 4,500 psi

DESIGN LOADING

Unifom Live Load: 90 lb/sq. ft.
Vehicle Live Load: AASHTO H10

DESIGN SPECIFICATIONS

2020 AASHTO LRFD Bridge Design Specifications, 9th Edition
2009 AASHTO LRFD Guide Specifications for the Design of Pedestrian Bridge.

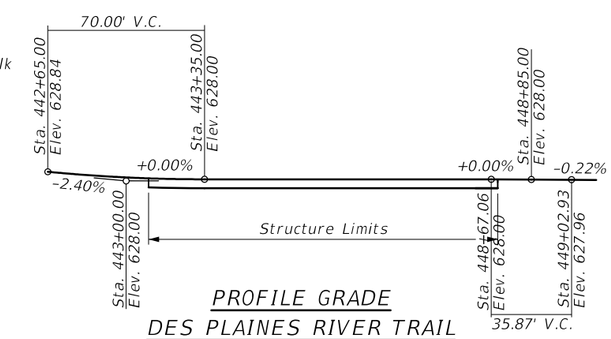

PROFILE GRADE
DES PLAINES RIVER TRAIL

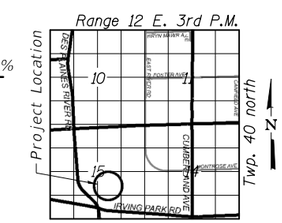

LOCATION SKETCH

SCOUR TABLE

Event/ Limit State	Design Scour Elevation (ft.) S. Abut.	Pier 75	Pier 76	Pier 77	Pier 78	Pier 79	Pier 80	Pier 81	Pier 82	Pier 83	Pier 84	Pier 85	Pier 86	Pier 87	Pier 88	Pier 89	Item 113
Q100	627.65	627.65	627.65	627.65	627.65	624.06	620.14	618.88	618.29	618.90	619.61	622.29	622.29	622.29	622.29	622.29	8
Q200	627.56	627.56	627.56	627.56	627.56	623.99	620.07	618.81	618.22	618.83	619.54	622.22	622.22	622.22	622.22	622.22	
Design	627.65	627.65	627.65	627.65	627.65	624.06	620.14	618.88	618.29	618.90	619.61	622.29	622.29	622.29	622.29	622.29	
Check	627.56	627.56	627.56	627.56	627.56	623.99	620.07	618.81	618.22	618.83	619.54	622.22	622.22	622.22	622.22	622.22	

GENERAL PLAN & ELEVATION
DES PLAINES RIVER TRAIL
PROPOSED BOARDWALK
SECTION 17-00034-00-BT
COOK COUNTY
STA. 443+11.21 to STA. 448+71.91

FILE NAME = N:\SCHILLERPARK\230454\Struct\230454 - 02 - GPE2 .dgn	USER NAME = mthomas	DESIGNED -	REVISED -	STATE OF ILLINOIS DEPARTMENT OF TRANSPORTATION	DES PLAINES RIVER TRAIL - SEGMENT 4 GENERAL PLAN & ELEVATION 2	F.A. RTE.	SECTION	COUNTY	TOTAL SHEETS / SHEET NO.
	PLOT SCALE = 24'	DRAWN -	REVISED -			N/A	17-00034-05-BT	COOK	86 / 45
Default	PLOT DATE = 9/6/2024	CHECKED -	REVISED -					CONTRACT NO. 61K54	
		DATE -	REVISED -		SCALE: 1:24 SHEET OF SHEETS STA. TO STA.		ILLINOIS	FED. AID PROJECT	

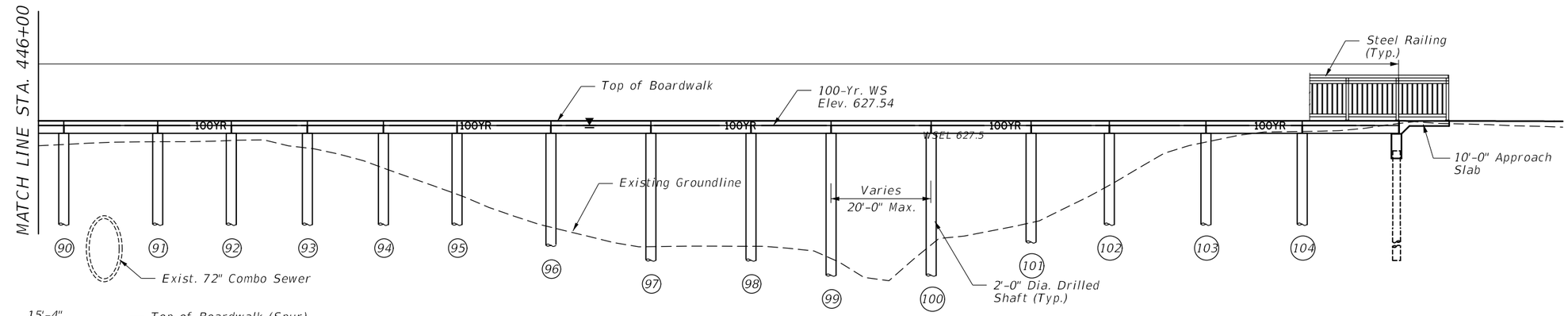

ELEVATION

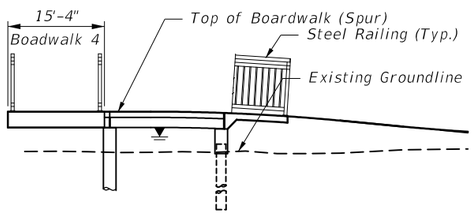

ELEVATION - SPUR

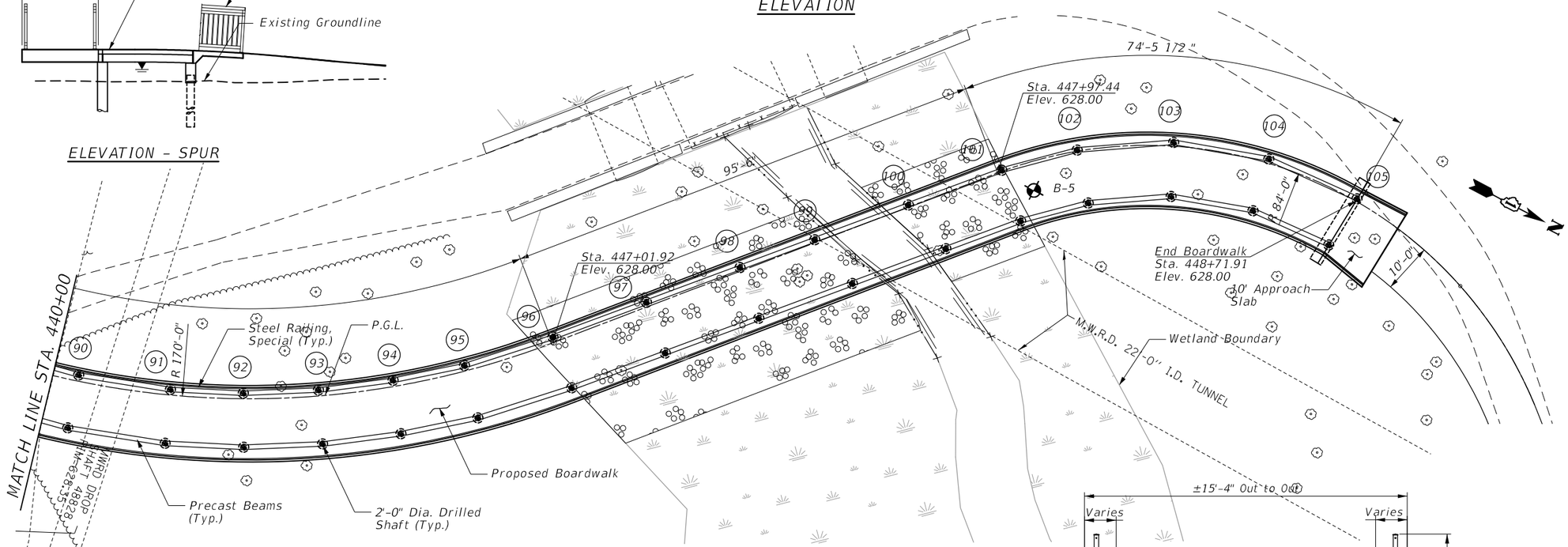

PLAN

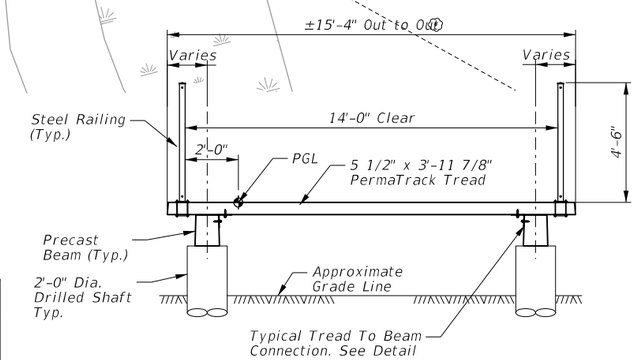

TYPICAL SECTION

SCOUR TABLE

Event/ Limit State	Design Scour Elevation (ft.)																Item 113
	Pier 90	Pier 91	Pier 92	Pier 93	Pier 94	Pier 95	Pier 96	Pier 97	Pier 98	Pier 99	Pier 100	Pier 101	Pier 102	Pier 103	Pier 104	N. Abut.	
Q100	624.29	624.29	624.21	624.21	624.21	623.21	621.21	616.90	613.87	612.60	611.21	614.21	618.39	620.49	620.49	620.49	8
Q200	624.22	624.22	624.24	624.24	624.24	623.24	621.24	616.93	613.90	612.57	619.54	614.24	618.42	620.52	620.52	620.52	
Design	624.29	624.29	624.21	624.21	624.21	623.21	621.21	616.90	613.87	612.60	611.21	614.21	618.39	620.49	620.49	620.49	
Check	624.22	624.22	624.24	624.24	624.24	623.24	621.24	616.93	613.90	612.57	619.54	614.24	618.42	620.52	620.52	620.52	

GENERAL PLAN & ELEVATION
DES PLAINES RIVER TRAIL
PROPOSED BOARDWALK
SECTION 17-00034-00-BT
COOK COUNTY
STA. 440+00 to STA. 448+71.91

FILE NAME = N:\SCHILLERPARK\230454\Struct\230454 - Default	USER NAME = mthomas	DESIGNED -	REVISED -
	03 - GPE3.dgn	DRAWN -	REVISED -
	PLOT SCALE = 24'	CHECKED -	REVISED -
	PLOT DATE = 9/6/2024	DATE -	REVISED -

STATE OF ILLINOIS
DEPARTMENT OF TRANSPORTATION

DES PLAINES RIVER TRAIL - SEGMENT 4
GENERAL PLAN & ELEVATION 3

SCALE: 1:24 | SHEET OF SHEETS | STA. TO STA.

F.A. RTE.	SECTION	COUNTY	TOTAL SHEETS	SHEET NO.
N/A	17-00034-05-BT	COOK	86	46

CONTRACT NO. 61K54

ILLINOIS FED. AID PROJECT

I General Notes

1. All work shall be done in accordance to the Illinois Department of Transportation (IDOT) Standard Specification for Road and Bridge Construction. Adopted January 1, 2022, and the January 1, 2024 Supplemental Specifications and Recurring Special Provisions, unless noted otherwise. Construction Plans and Subsequent Details are all to be considered as part of the Contract. Incidental Items or Accessories necessary to complete this work may not be specifically noted but are considered a part of this Contract.

2. No Construction Plans shall be used for Construction unless specifically Marked for Construction. Prior to commencement of construction, the Contractor shall verify all dimensions and conditions affecting the work with the actual conditions, if there are discrepancies between the Job site and what Is shown on the construction plans, the contractor must Immediately report to Engineer before doing any work, otherwise the Contractor shall assume full responsibility. In the event of disagreement between the plans and existing conditions and or details, the Contractor shall secure written Instruction from the Engineer prior to proceeding with any part of the work affected by omissions or discrepancies. In failing to secure such instruction, the Contractor will be considered to have proceeded at his own risk and expense. In the event of any doubt or questions arising with respect to the true meaning of the Construction Plans or Specifications, the decision of the Engineer shall be final and conclusive.

3. Contractor shall verify all topographic Information and grade elevations adjacent to bridge prior to proceeding, Inform Engineer of any variation.

II CAST-IN-PLACE CONCRETE

1. All cast-In-place concrete work and reinforcing steel work shall be in accordance with Sections 503 and 508 respectively of the IDOT Standard Specifications for Road and Bridge Construction, adopted January 1, 2022, and Supplemental Specifications and Recurring Special Provisions and as noted below.

2. Cover from the face of concrete to face of reinforcement bars shall be 3" for surfaces cast against earth and 2" for all other surfaces unless otherwise shown.

3. Reinforcement Bars designated (E) shall be Epoxy Coated.

4. Reinforcing bar bending dimensions are out to out.

5. All exposed concrete edges shall be beveled ¾"".

III PRECAST CONCRETE BOARDWALK

1. Only PermaTrak North America may provide the precast structure shown in the plans.

2. Abutments and Drilled Shafts shall be designed for lateral earth pressure, live load surcharge, and structure loads.

   Pier loads are based upon a maximum longitudinal spacing of 20'-0".

   Compression: 33.9 kips (Service)
   Lateral: 2.2 kips (Service)

   The Contractor shall be responsible for the design, materials, and installation of the drilled shaft foundation piers, cast in place concrete grade beam supports, and railing for the Boardwalk Structure. All foundation locations shown in the boardwalk plans are approximate and shall be determined in the final boardwalk design. All details are approximate and are to be used for estimate purposes only. Contractor shall coordinate design of support foundations and railings with PermaTrak prior to delivery of final design package for review. See Special Provisions for more details.

3. All bolts, nuts, washers, and hardware shall be hot-dipped galvanized after fabrication in accordance with ASTM A153.

4. Contractor shall accommodate thermal expansion and meet all code requirements for pedestrian rail loading and configuration requirements, including the limits on the size of opening allowed. Cost for the design, fabrication and installation of rail is included in BOARDWALK STRUCTURE. See Boardwalk structure special provisions for more information.

IV CONSTRUCTION

1. Do not scale dimensions for construction. Scale, if shown, applies only to full size drawings.

2. No construction joints, except those shown on the plans, will be allowed unless directed by the Engineer.

3. Any information concerning type or location of underground and other utilities is not guaranteed to be accurate or all inclusive. The Contractor is responsible for making his own determinations as to the type and location of the utilities as may be necessary to avoid damage thereto. Contractor shall call J.U.L.I.E. and the Engineer prior to excavation.

4. Shop working or layout drawings pertaining to the construction of the work, as may be required, shall be submitted to the Engineer for approval prior to the start of construction. Shop drawing shall be signed and sealed by a Structural Engineer licensed in State of Illinois.

5. Upon completion, the contractor shall collect and remove all construction debris and excess material from the site. Damaged trees, shrubs, and other landscape features resulting from construction activities shall be replaced or repaired.

6. All bearing surfaces must be true and level.

7. Contractor must coordinate with Bridge Manufacturer to ensure proper placement of cast-in-place anchors. If the contractor elects to use post-installed anchors in lieu of cast-in-place anchors, he must coordinate the plate dimensions, bolt spacing and bolt quantity with the Bridge Manufacturer prior to construction.

8. Contractor shall watch and protect existing 6'-6" diameter watermain tunnel at Station 337+02.50. Contractor shall locate drilled shafts such that watermain remains centered between shafts. Depth of tunnel is unknown. Contractor shall contact the owner if excavation or testing is required to determine exact location and depth of watermain tunnel.

9. Minimal disturbance of the wetlands and conservation of trees is critical. Given the limited working space for boardwalk construction, the Contractor shall utilize top-down construction methods. The Contractor shall remain in the working area and minimize wetland disturbance by placing protective mats or other measures for installation of the drilled shaft foundations. No additional compensation will be provided based on the limited access and construction area. All precast elements of the boardwalk shall be installed using equipment operating from the top of the new boardwalk structure.

ABBREVIATIONS

Appr.	Approach
Approx.	Approximate
Conc.	Concrete
℄	Centerline
Clr.	Clearance
Cts.	Centers
Dia.	Diameter
∅	Diameter
El.	Elevation
Exist.	Existing
Galv.	Galvanized
HDG	Hot Dip Galvanized
Min.	Minimum
O.C.	On Center
PL	Plate
S.S.	Stainless Steel
Sta.	Station
Typ.	Typical
UNO	Unless Noted Otherwise
Ws	Water Surface

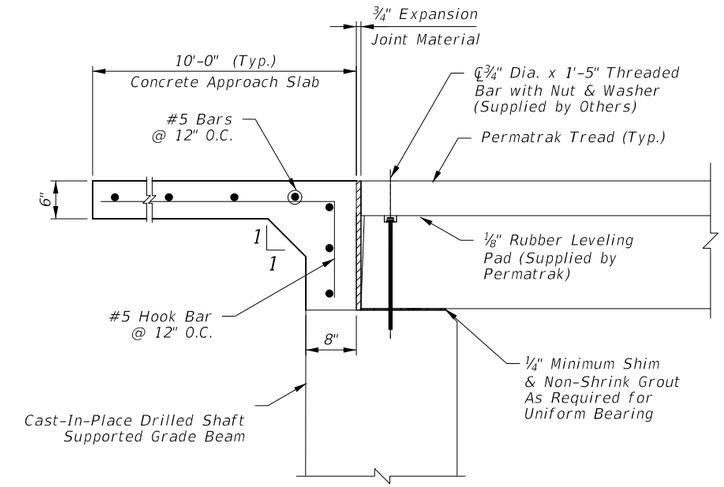

TYPICAL APPROACH DETAIL

NOTES:

1. Threaded Bar Shall Be Set in Epoxy Adhesive Anchoring System.
2. Threaded Bar Shall Be Embedded a Minimum of 3" Deep.
3. Drilled Hole Shall Be⅞" in Diameter.
4. Completely Cover the Threaded Bar, Nut and Washer and Fill the Void Around the Threaded Bar with Epoxy Adhesive or Non-Shrink Grout.

TOTAL BILL OF MATERIAL

PAY ITEM	DESCRIPTION	UNIT	QUANTITY
50200100	Structure Excavation	Cu. Yd.	70
50301350	Concrete Superstructure (Approach Slab)	Cu. Yd.	20.0
50800205	Reinforcement Bars, Epoxy Coated	Lbs.	2,400
XX008287	Boardwalk Structure	Sq. Ft.	9,805

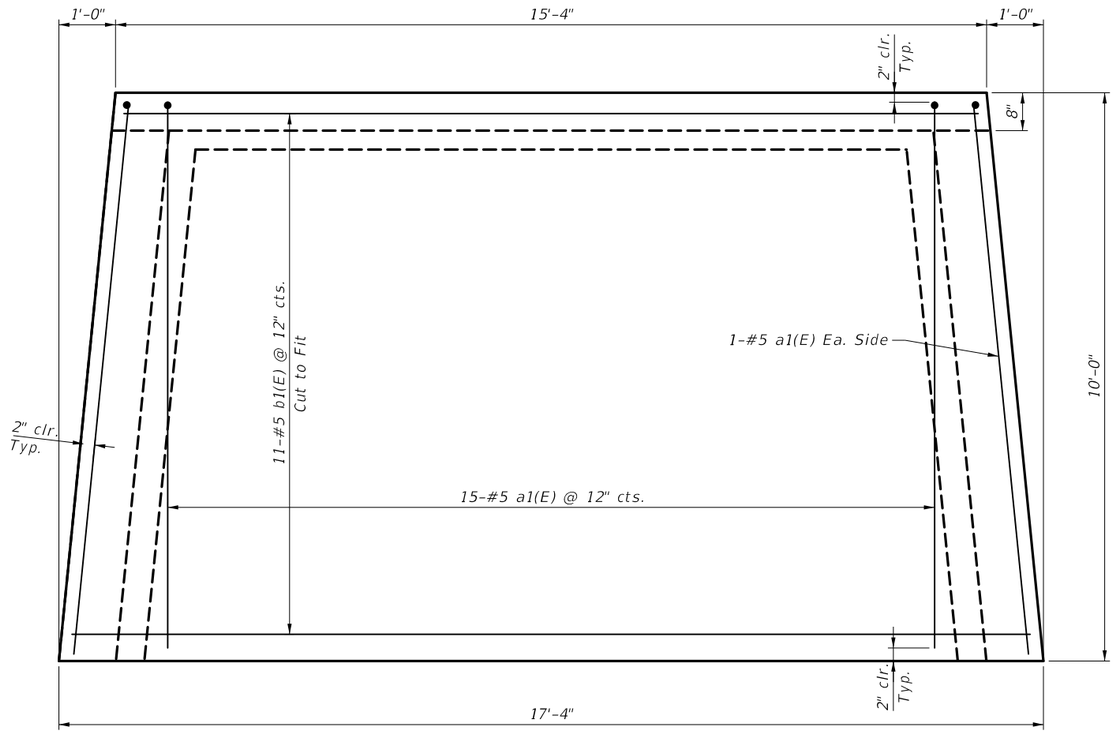

APPROACH SLAB PLAN

BILL OF MATERIAL FOR ONE APPROACH SLAB

Bar	No.	Size	Length	Shape
a1(E)	17	#5	10'-11"	
a2(E)	4	#5	9'-8"	
b1(E)	11	#5	17'-0"	
Concrete Superstructure (Approach Slab)			Cu. Yd.	4.0
Reinforcement Bars, Epoxy Coated			Lb	480

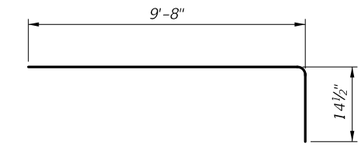

BAR a1(E)

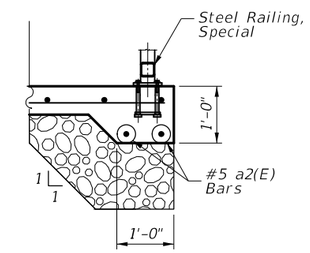

THICKENED EDGE ELEVATION

See Steel Railing Details for Anchor Bolt Dimensions

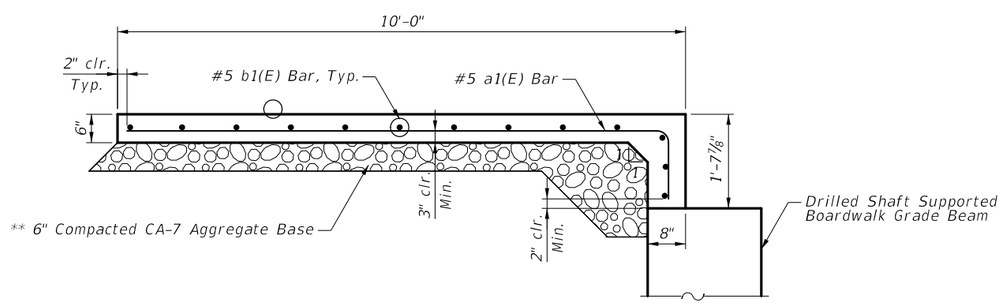

CONCRETE SLAB ELEVATION

** Cost included with CONCRETE SUPERSTRUCTURE (APPROACH SLAB)

NOTES:

1. Approach Slab Typical at Each Boardwalk Termination. See General Plan and Elevation Sheets.
2. Proposed Path at Boardwalk Terminations has 1½% Cross Slope. See Civil Plans for Details.

FILE NAME = N:\SCHILLERPARK\230454\Struct\230454 - 05 - Approach.dgn	USER NAME = mthomas	DESIGNED -	REVISED -	STATE OF ILLINOIS DEPARTMENT OF TRANSPORTATION	DES PLAINES RIVER TRAIL – SEGMENT 4	F.A. RTE.	SECTION	COUNTY	TOTAL SHEETS	SHEET NO.
		DRAWN -	REVISED -		APPROACH SLAB DETAILS	N/A	17-00034-05-BT	COOK	86	48
	PLOT SCALE = 2'	CHECKED -	REVISED -					CONTRACT NO. 61K54		
Default	PLOT DATE = 9/6/2024	DATE -	REVISED -		SCALE: 1:2 SHEET OF SHEETS STA. TO STA.		ILLINOIS FED. AID PROJECT			

Non-Shrink Grout.

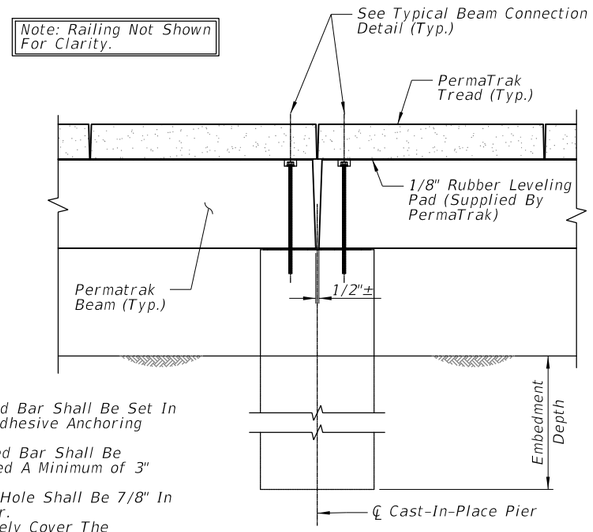

Notes:
1. Threaded Bar Shall Be Set In Epoxy Adhesive Anchoring System.
2. Threaded Bar Shall Be Embedded A Minimum of 3" Deep.
3. Drilled Hole Shall Be 7/8" In Diameter.
4. Completely Cover The Threaded Bar, Nut and Washer And Fill The Void Around The Threaded Bar With Epoxy Adhesive Or Non-Shrink Grout.

TYPICAL PIER CONNECTION DETAIL

Scale: Not To Scale

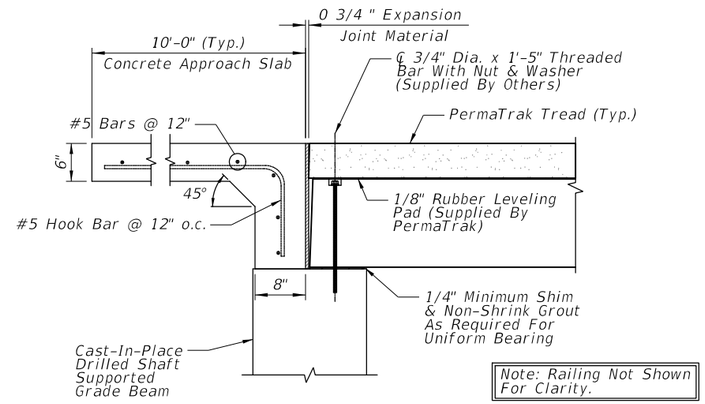

TYPICAL APPROACH

Scale: 1" = 1'-0"

Notes:
1. Threaded Bar Shall Be Set In Epoxy Adhesive Anchoring System.
2. Threaded Bar Shall Be Embedded A Minimum of 3" Deep.
3. Drilled Hole Shall Be 7/8" In Diameter.
4. Completely Cover The Threaded Bar, Nut and Washer And Fill The Void Around The Threaded Bar With Epoxy Adhesive Or Non-Shrink Grout.
5. Approach slab reinforcement shown will be included in the cost of sidewalk. 6".

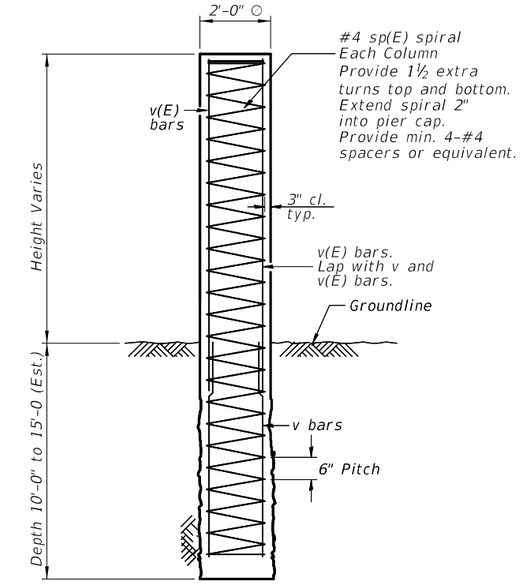

TYPICAL CONCRETE DRILLED SHAFT DETAIL

** Cost of Drilled Shaft Design and Construction is Included with BOARDWALK STRUCTURE.

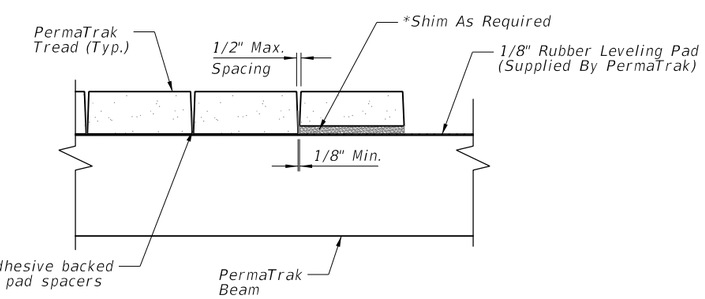

*Note:

Due to tolerances and variance in precast production and installation accuracy, shims may be required. Additional rubber leveling pads maybe used for shimming.

TYPICAL SHIM (UNDER TREAD) AND TREAD SPACING DETAIL

Scale: Not To Scale

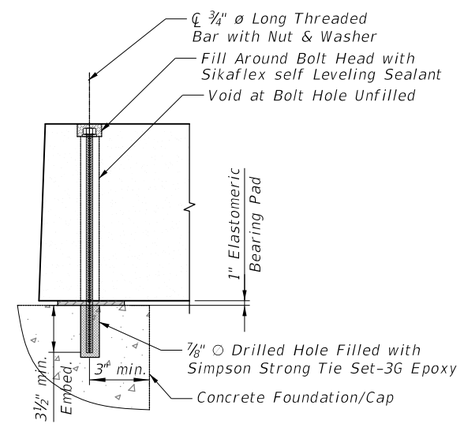

TYPICAL BEAM TO CONCRETE FOUNDATION/CAP CONNECTION DETAIL

Scale: Not To Scale

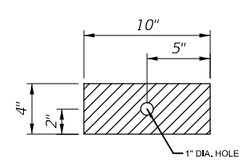

ELASTOMERIC PAD PLAN

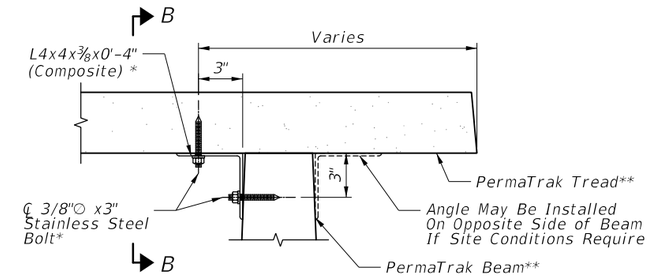

TREAD TO BEAM CONNECTION

Scale: Not To Scale

* Adhesive Not Supplied By Permatrak. Clip Angles, Threaded Rods and Nuts Supplied By Permatrak.

** Indicates Supplied by Boardwalk Manufacturer and Installed by Contractor.

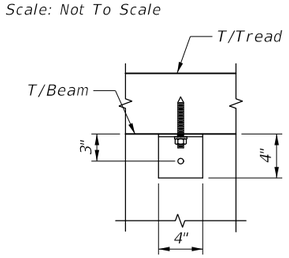

SECTION B-B

FILE NAME = N:\SCHILLERPARK\230454\Struct\230454 - 06 - Bwalk Details.dgn	USER NAME = mthomas	DESIGNED -	REVISED -	STATE OF ILLINOIS DEPARTMENT OF TRANSPORTATION
	PLOT SCALE = 2'	DRAWN -	REVISED -	
Default	PLOT DATE = 9/6/2024	CHECKED -	REVISED -	
		DATE -	REVISED -	

DES PLAINES RIVER TRAIL – SEGMENT 4
BOARDWALK DETAILS

SCALE: 1:2 | SHEET OF SHEETS | STA. TO STA.

F.A. RTE.	SECTION	COUNTY	TOTAL SHEETS	SHEET NO.
N/A	17-00034-05-BT	COOK	86	49

CONTRACT NO. 61K54

ILLINOIS FED. AID PROJECT

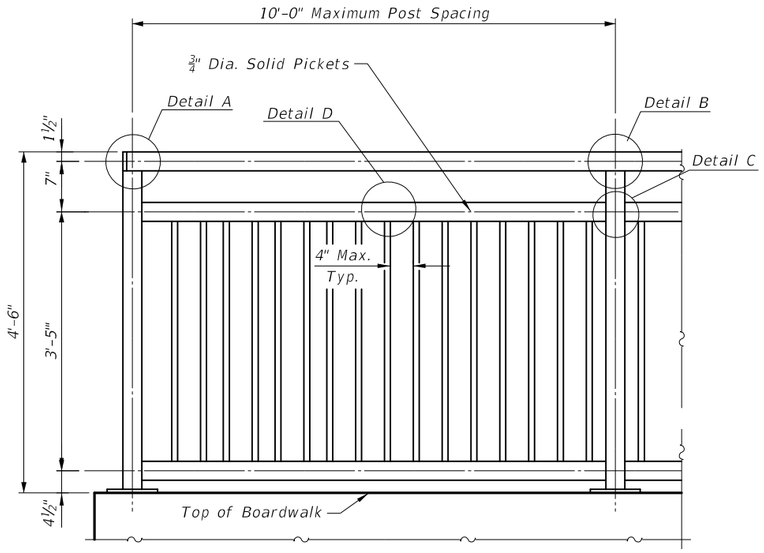

BRIDGE FENCE RAILING (SIDEWALK)

Maximum Post Spacing = 10'-0"

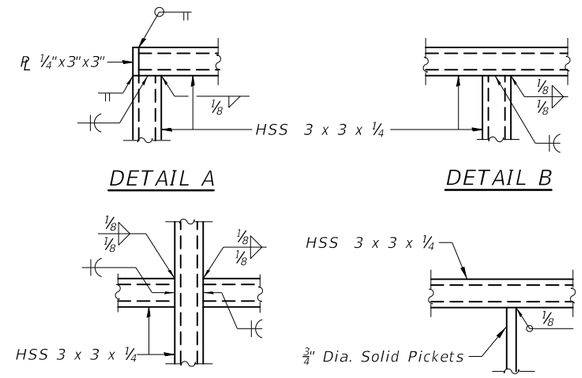

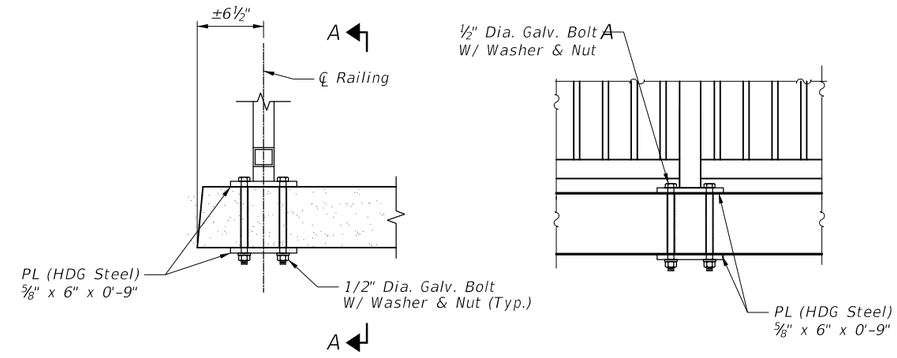

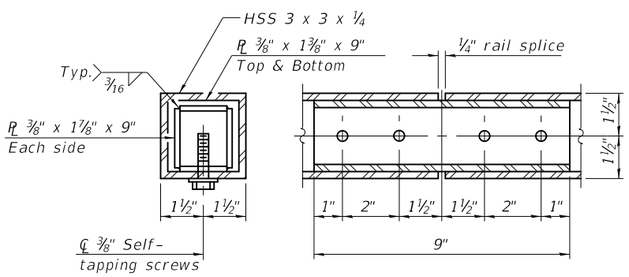

RAIL SPLICE

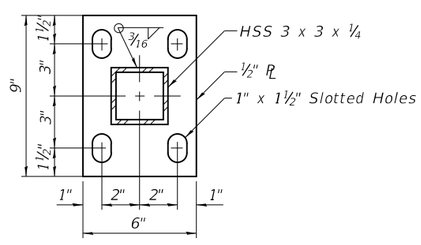

BASE PL

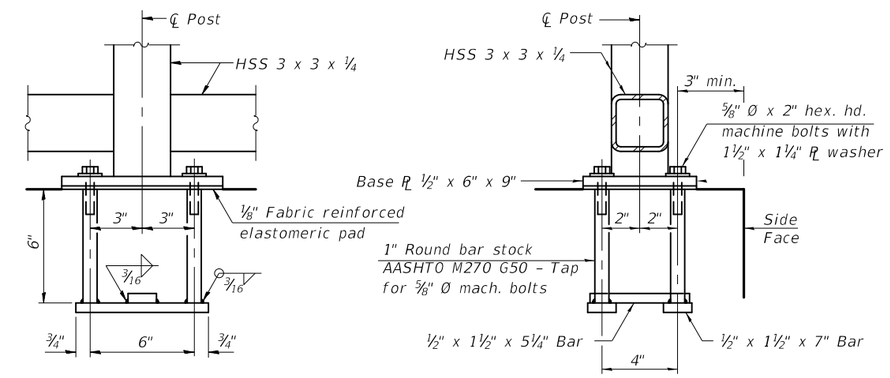

ANCHOR BOLT DETAILS (FOR APPROACHES)

In lieu of the cast-in-place anchor device shown, the Contractor has the option of drilling and setting ⅝" Ø anchor rods according to Article 509.06 of the Standard Specifications. Embedment shall be according to the manufacturer's specifications.

NOTES:

1. All Steel Rail Elements shalll be Galvanized According to Article 509.05 of the Standard Specifications.
2. All Holes Shall be Drilled by Contractor.
3. One (1) Clip Angle is Required on Each End of Any Tread with a Handrail post Attachment. Two (@) Clip Angles Total Per Individual Tread U.N.O. in Plan View.
4. Contractor Shall Ensure Placement of Clip Angles and Anchors Does Not Interfere with Steel Railing Post Anchors.
5. Cost of Steel Railing, Special and Anchorage Design, Materials and Construction is Included with BOARDWAK STRUCTURE or with CONCRETE SUPERSTRUCTURE (APPROACH SLAB).

FILE NAME = N:\SCHILLERPARK\230454\Struct\230454 - 07 - Railing.dgn	USER NAME = mthomas	DESIGNED -	REVISED -	STATE OF ILLINOIS DEPARTMENT OF TRANSPORTATION	DES PLAINES RIVER TRAIL – SEGMENT 4	F.A. RTE.	SECTION	COUNTY	TOTAL SHEETS	SHEET NO.
	PLOT SCALE = 2'	DRAWN -	REVISED -		STEEL RAILING DETAILS	N/A	17-00034-05-BT	COOK	86	50
Default	PLOT DATE = 9/6/2024	CHECKED -	REVISED -					CONTRACT NO. 61K54		
		DATE -	REVISED -		SCALE: 1:2 SHEET OF SHEETS STA. TO STA.		ILLINOIS FED. AID PROJECT			

PROJECT Des Plaines River Trail - Segment 4, Lawrence Ave. to Irving Park Rd., Schiller Park, IL

CLIENT Christopher B. Burke Engineering, Ltd., 9575 W. Higgins Rd., Rosemont, IL

BORING 1 DATE STARTED 12-19-23 DATE COMPLETED 12-19-23 JOB L-96,255

ELEVATIONS: GROUND SURFACE 626.5; END OF BORING 596.5

WATER LEVEL OBSERVATIONS: WHILE DRILLING 8.0 '; AT END OF BORING 8.0 '; 24 HOURS

SAMPLE NO.	TYPE	N	WC	Qu	DEPTH	ELEV.	SOIL DESCRIPTIONS
					0.8	625.7	Black clayey TOPSOIL (OL)
1	SS	9	19.8	4.5+*			Hard brown and gray silty CLAY, little sand, trace gravel, occasional silt seams, moist (CL)
2	SS	14	21.9	4.5+*			
					5.5	621.0	
3	SS	15	16.4				Medium dense brownish-gray SAND, little gravel, moist to wet (SP)
					8.0	618.5	
4	SS	17					Medium dense gray SAND and GRAVEL, wet (SP/GP)
					10.5	616.0	
5	SS	12	17.5	1.75*			Stiff to very stiff gray silty CLAY, little sand and gravel, occasional silt and sand seams, moist (CL)
6	SS	14	17.0	1.77 1.75*			
7	SS	17	19.7	2.56 2.75*			
8	SS	20	17.2	3.75*			
					27.0	599.5	
9	SS	66	16.9				Very dense gray SILT, little sand, moist (ML)
							End of Boring at 30.0'

* Approximate unconfined compressive strength based on measurements with a calibrated pocket penetrometer.

DRILL RIG NO. 314

Division lines between deposits represent approximate boundaries between soil types; in-situ, the transition may be gradual.

DISTANCE BELOW SURFACE IN FEET

TSC 96255.GPJ TSC_ALL.GDT 19/24

PROJECT Des Plaines River Trail - Segment 4, Lawrence Ave. to Irving Park Rd., Schiller Park, IL

CLIENT Christopher B. Burke Engineering, Ltd., 9575 W. Higgins Rd., Rosemont, IL

BORING 2 DATE STARTED 12-19-23 DATE COMPLETED 12-19-23 JOB L-96,255

ELEVATIONS: GROUND SURFACE 626.5; END OF BORING 596.5

WATER LEVEL OBSERVATIONS: WHILE DRILLING 8.0 '; AT END OF BORING 10.0 '; 24 HOURS

SAMPLE NO.	TYPE	N	WC	Qu	DEPTH	ELEV.	SOIL DESCRIPTIONS
					0.6	625.9	Black clayey TOPSOIL (OL)
1	SS	14	21.9	4.5+*			Hard brown and gray silty CLAY, little sand, trace gravel, occasional silt seams, moist (CL)
2	SS	17	18.6	4.5+*			
					5.5	621.0	
3	SS	16	21.9				Medium dense brown and gray clayey SILT, little sand, occasional sand seams, moist to very moist (ML)
					8.0	618.5	
4	SS	14					Medium dense brownish-gray SAND, little gravel, wet (SP)
					10.5	616.0	
5	SS	12	23.2	2.49 2.25*			Very stiff gray silty CLAY, little sand, trace gravel, moist (CL)
6	SS	14	25.4	2.34 2.25*			
					17.0	609.5	
7	SS	20	14.8	2.25*			Very stiff gray silty CLAY, little sand and gravel, moist (CL)
8	SS	24	13.6	3.63 3.75*			
					27.0	599.5	
9	SS	63	17.0				Very dense gray SILT, little sand, moist (ML)
							End of Boring at 30.0'

* Approximate unconfined compressive strength based on measurements with a calibrated pocket penetrometer.

DRILL RIG NO. 314

Division lines between deposits represent approximate boundaries between soil types; in-situ, the transition may be gradual.

DISTANCE BELOW SURFACE IN FEET

TSC 96255.GPJ TSC_ALL.GDT 19/24

PROJECT Des Plaines River Trail - Segment 4, Lawrence Ave. to Irving Park Rd., Schiller Park, IL

CLIENT Christopher B. Burke Engineering, Ltd., 9575 W. Higgins Rd., Rosemont, IL

BORING 3 DATE STARTED 12-20-23 DATE COMPLETED 12-20-23 JOB L-96,255

ELEVATIONS: GROUND SURFACE 622.5; END OF BORING 592.5

WATER LEVEL OBSERVATIONS: WHILE DRILLING 10.5 '; AT END OF BORING 20.0 '; 24 HOURS

SAMPLE NO.	TYPE	N	WC	Qu	DEPTH	ELEV.	SOIL DESCRIPTIONS
					0.5	622.0	Dark brown clayey TOPSOIL (OL)
1	SS	10	15.5	3.0*			Very stiff brown sandy CLAY, trace gravel, moist (CL-ML)
					3.0	619.5	
2	SS	9	17.5				Loose brown clayey SAND, trace gravel, trace roots, moist (SC)
					5.5	617.0	
3	SS	11	16.4	2.82 2.75*			Very stiff brown and gray silty CLAY, little sand and gravel, moist (CL)
					8.0	614.5	
4	SS	14	22.8	2.69 3.0*			Very stiff gray silty CLAY, little sand, trace gravel, moist (CL)
					10.5	612.0	
5	SS	13	15.7	2.0*			Stiff to very stiff gray silty CLAY, little sand and gravel, occasional silt seams, moist (CL)
6	SS	17	15.8	2.62 2.75*			
					17.0	605.5	
7	SS	23	13.7				Medum dense gray clayey SILT, little sand, trace gravel, very moist (ML)
					22.0	600.5	
8	SS	55	17.1				Very dense gray SILT, little sand, moist (ML)
					27.0	595.5	
9	SS	73	13.2				Very dense gray sandy SILT, little gravel, moist (ML)
							End of Boring at 30.0'

* Approximate unconfined compressive strength based on measurements with a calibrated pocket penetrometer.

DRILL RIG NO. 314

Division lines between deposits represent approximate boundaries between soil types; in-situ, the transition may be gradual.

DISTANCE BELOW SURFACE IN FEET

TSC 96255.GPJ TSC_ALL.GDT 19/24

PROJECT Des Plaines River Trail - Segment 4, Lawrence Ave. to Irving Park Rd., Schiller Park, IL

CLIENT Christopher B. Burke Engineering, Ltd., 9575 W. Higgins Rd., Rosemont, IL

BORING 4 DATE STARTED 12-20-23 DATE COMPLETED 12-20-23 JOB L-96,255

ELEVATIONS: GROUND SURFACE 625.5; END OF BORING 595.5

WATER LEVEL OBSERVATIONS: WHILE DRILLING 8.0 '; AT END OF BORING 18.0 '; 24 HOURS

SAMPLE NO.	TYPE	N	WC	Qu	DEPTH	ELEV.	SOIL DESCRIPTIONS
					0.5	625.0	Dark brown clayey TOPSOIL (OL)
1	SS	12	20.0	2.43 2.5*			Very stiff brown silty CLAY, little sand, trace gravel, occasional sand seams, moist (CL)
					3.0	622.5	
2	SS	11	10.8	4.5+*			Hard brown sandy CLAY, trace gravel, moist (CL-ML)
					5.5	620.0	
3	SS	16	7.9				Medium dense brown fine to medium SAND, moist to very moist (SP)
					8.0	617.5	
A 4 B	SS	14	18.1	2.16 2.0*	9.0	616.5	Medium dense brown and gray SAND and GRAVEL, wet (SP/GP)
5	SS	15	18.7	1.97 2.0*			Very stiff to stiff gray silty CLAY, little sand, trace gravel, moist to very moist (CL)
6	SS	13	18.5	1.5*			
					17.0	608.5	
7	SS	24	18.1				Medium dense gray clayey SILT, little sand, very moist (ML)
					22.0	603.5	
8	SS	61	16.7				Very dense gray SILT, little sand, moist (ML)
					27.0	598.5	
9	SS	78	9.8				Very dense gray sandy SILT, little gravel, moist (ML)
							End of Boring at 30.0'

* Approximate unconfined compressive strength based on measurements with a calibrated pocket penetrometer.

DRILL RIG NO. 314

Division lines between deposits represent approximate boundaries between soil types; in-situ, the transition may be gradual.

DISTANCE BELOW SURFACE IN FEET

TSC 96255.GPJ TSC_ALL.GDT 19/24

PROJECT Des Plaines River Trail - Segment 4, Lawrence Ave. to Irving Park Rd., Schiller Park, IL

CLIENT Christopher B. Burke Engineering, Ltd., 9575 W. Higgins Rd., Rosemont, IL

BORING 5 DATE STARTED 12-20-23 DATE COMPLETED 12-20-23 JOB L-96,255

ELEVATIONS: GROUND SURFACE 617.0; END OF BORING 587.0

WATER LEVEL OBSERVATIONS: WHILE DRILLING 13.0 '; AT END OF BORING 25.0 '; 24 HOURS

SAMPLE NO.	TYPE	N	WC	Qu	DEPTH	ELEV.	SOIL DESCRIPTIONS
					1.3	615.7	Black clayey TOPSOIL (OL)
1	SS	9	18.6	1.97 2.0*			Stiff to very stiff brown trace gray silty CLAY, little sand, trace gravel, moist (CL)
2	SS	13	25.4	2.96 3.0*			
3	SS	11	19.1	2.75*			
					8.0	609.0	
4	SS	12	17.6	2.56 3.0*			Very stiff gray silty CLAY, little sand and gravel, moist (CL)
5	SS	13	17.5	2.5*			
					13.0	604.0	
6	SS	49	17.2				Dense gray SILT, little sand, very moist (ML)
7	SS	30	18.6				
					22.0	595.0	
8	SS	32	9.5	4.5+*			Hard gray sandy CLAY, trace gravel, occasional silt seams, moist (CL-ML)
9	SS	30	12.7	6.54 4.5+*			
							End of Boring at 30.0'

* Approximate unconfined compressive strength based on measurements with a calibrated pocket penetrometer.

DRILL RIG NO. 314

Division lines between deposits represent approximate boundaries between soil types; in-situ, the transition may be gradual.

DISTANCE BELOW SURFACE IN FEET

TSC 96255.GPJ TSC_ALL.GDT 19/24

FILE NAME = N:\SCHILLERPARK\230454\Struct\230454 - 08 - Borings.dgn	USER NAME = mthomas	DESIGNED -	REVISED -
	PLOT SCALE = 2'	DRAWN -	REVISED -
Default	PLOT DATE = 9/6/2024	CHECKED -	REVISED -
		DATE -	REVISED -

STATE OF ILLINOIS
DEPARTMENT OF TRANSPORTATION

DES PLAINES RIVER TRAIL – SEGMENT 4

BORING LOGS

SCALE: 1:2 SHEET OF SHEETS STA. TO STA.

F.A. RTE.	SECTION	COUNTY	TOTAL SHEETS	SHEET NO.
N/A	17-00034-05-BT	COOK	86	51

CONTRACT NO. 61K54

ILLINOIS FED. AID PROJECT

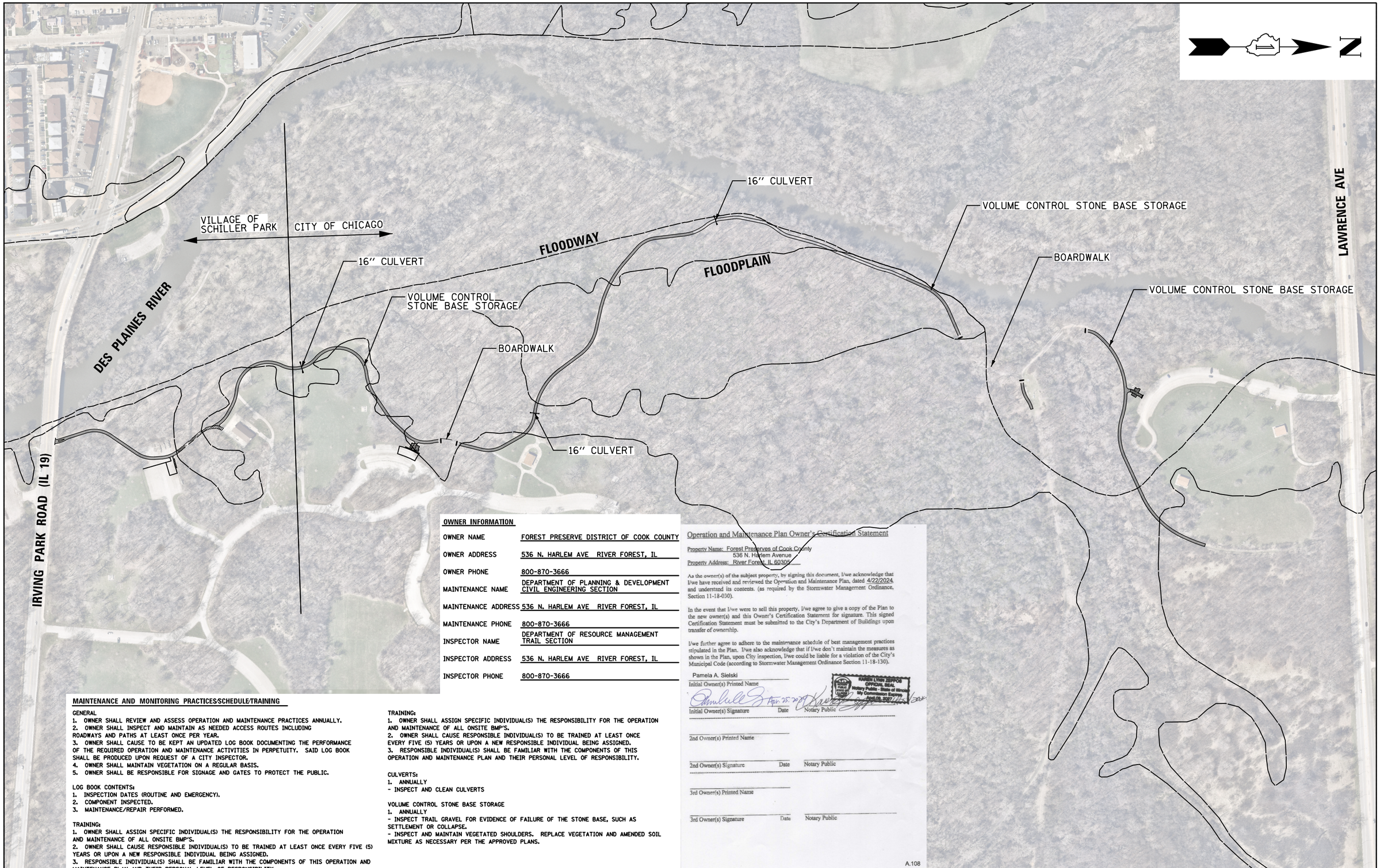

OWNER INFORMATION

OWNER NAME	FOREST PRESERVE DISTRICT OF COOK COUNTY
OWNER ADDRESS	536 N. HARLEM AVE RIVER FOREST, IL
OWNER PHONE	800-870-3666
MAINTENANCE NAME	DEPARTMENT OF PLANNING & DEVELOPMENT CIVIL ENGINEERING SECTION
MAINTENANCE ADDRESS	536 N. HARLEM AVE RIVER FOREST, IL
MAINTENANCE PHONE	800-870-3666
INSPECTOR NAME	DEPARTMENT OF RESOURCE MANAGEMENT TRAIL SECTION
INSPECTOR ADDRESS	536 N. HARLEM AVE RIVER FOREST, IL
INSPECTOR PHONE	800-870-3666

MAINTENANCE AND MONITORING PRACTICES/SCHEDULE/TRAINING

GENERAL
1. OWNER SHALL REVIEW AND ASSESS OPERATION AND MAINTENANCE PRACTICES ANNUALLY.
2. OWNER SHALL INSPECT AND MAINTAIN AS NEEDED ACCESS ROUTES INCLUDING ROADWAYS AND PATHS AT LEAST ONCE PER YEAR.
3. OWNER SHALL CAUSE TO BE KEPT AN UPDATED LOG BOOK DOCUMENTING THE PERFORMANCE OF THE REQUIRED OPERATION AND MAINTENANCE ACTIVITIES IN PERPETUITY. SAID LOG BOOK SHALL BE PRODUCED UPON REQUEST OF A CITY INSPECTOR.
4. OWNER SHALL MAINTAIN VEGETATION ON A REGULAR BASIS.
5. OWNER SHALL BE RESPONSIBLE FOR SIGNAGE AND GATES TO PROTECT THE PUBLIC.

LOG BOOK CONTENTS:
1. INSPECTION DATES (ROUTINE AND EMERGENCY).
2. COMPONENT INSPECTED.
3. MAINTENANCE/REPAIR PERFORMED.

TRAINING:
1. OWNER SHALL ASSIGN SPECIFIC INDIVIDUAL(S) THE RESPONSIBILITY FOR THE OPERATION AND MAINTENANCE OF ALL ONSITE BMP'S.
2. OWNER SHALL CAUSE RESPONSIBLE INDIVIDUAL(S) TO BE TRAINED AT LEAST ONCE EVERY FIVE (5) YEARS OR UPON A NEW RESPONSIBLE INDIVIDUAL BEING ASSIGNED.
3. RESPONSIBLE INDIVIDUAL(S) SHALL BE FAMILIAR WITH THE COMPONENTS OF THIS OPERATION AND MAINTENANCE PLAN AND THEIR PERSONAL LEVEL OF RESPONSIBILITY.

TRAINING:
1. OWNER SHALL ASSIGN SPECIFIC INDIVIDUAL(S) THE RESPONSIBILITY FOR THE OPERATION AND MAINTENANCE OF ALL ONSITE BMP'S.
2. OWNER SHALL CAUSE RESPONSIBLE INDIVIDUAL(S) TO BE TRAINED AT LEAST ONCE EVERY FIVE (5) YEARS OR UPON A NEW RESPONSIBLE INDIVIDUAL BEING ASSIGNED.
3. RESPONSIBLE INDIVIDUAL(S) SHALL BE FAMILIAR WITH THE COMPONENTS OF THIS OPERATION AND MAINTENANCE PLAN AND THEIR PERSONAL LEVEL OF RESPONSIBILITY.

CULVERTS:
1. ANNUALLY
- INSPECT AND CLEAN CULVERTS

VOLUME CONTROL STONE BASE STORAGE
1. ANNUALLY
- INSPECT TRAIL GRAVEL FOR EVIDENCE OF FAILURE OF THE STONE BASE, SUCH AS SETTLEMENT OR COLLAPSE.
- INSPECT AND MAINTAIN VEGETATED SHOULDERS. REPLACE VEGETATION AND AMENDED SOIL MIXTURE AS NECESSARY PER THE APPROVED PLANS.

Operation and Maintenance Plan Owner's Certification Statement

Property Name: Forest Preserves of Cook County
536 N. Harlem Avenue
Property Address: River Forest, IL 60305

As the owner(s) of the subject property, by signing this document, I/we acknowledge that I/we have received and reviewed the Operation and Maintenance Plan, dated 4/22/2024, and understand its contents. (as required by the Stormwater Management Ordinance, Section 11-18-030).

In the event that I/we were to sell this property, I/we agree to give a copy of the Plan to the new owner(s) and this Owner's Certification Statement for signature. This signed Certification Statement must be submitted to the City's Department of Buildings upon transfer of ownership.

I/we further agree to adhere to the maintenance schedule of best management practices stipulated in the Plan. I/we also acknowledge that if I/we don't maintain the measures as shown in the Plan, upon City inspection, I/we could be liable for a violation of the City's Municipal Code (according to Stormwater Management Ordinance Section 11-18-130).

Pamela A. Sielski
Initial Owner(s) Printed Name

Initial Owner(s) Signature — Date Apr. 25, 2024 — Notary Public

KAREN LYNN ZEPPOS
OFFICIAL SEAL
Notary Public - State of Illinois
My Commission Expires
April 25, 2027

2nd Owner(s) Printed Name

2nd Owner(s) Signature — Date — Notary Public

3rd Owner(s) Printed Name

3rd Owner(s) Signature — Date — Notary Public

A.108

FILE NAME = N:\SCHILLERPARK\230454\Civil\O-M_PLAN_230454_01.SHT	USER NAME = mthomas	DESIGNED -	REVISED -
	PLOT SCALE = 320'	DRAWN -	REVISED -
Default	PLOT DATE = 9/6/2024	CHECKED -	REVISED -
		DATE -	REVISED -

STATE OF ILLINOIS
DEPARTMENT OF TRANSPORTATION

DES PLAINES RIVER TRAIL – SEGMENT 4
OPERATIONS AND MAINTENANCE PLAN

SCALE: 1:320 | SHEET OF SHEETS | STA. TO STA.

F.A. RTE.	SECTION	COUNTY	TOTAL SHEETS	SHEET NO.
N/A	17-00034-05-BT	COOK	86	52

CONTRACT NO. 61K54

ILLINOIS FED. AID PROJECT

AUTOCAD2006

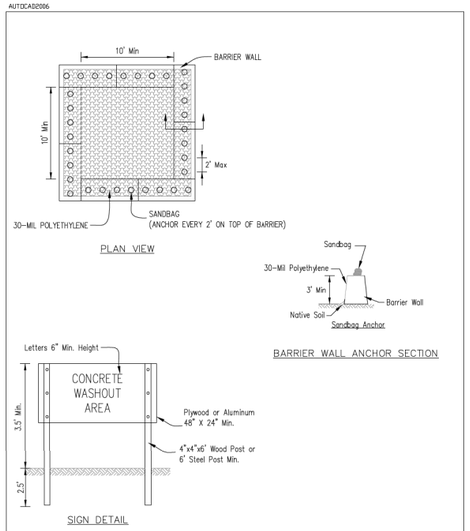

NOTES:

1. Maintaining temporary concrete washout facilities shall include removing and disposing of hardend concrete and/or slurry and returning the facilities to a functional condition.
2. Facility shall be cleaned or reconstructed in a new area once washout becomes two-thirds full.

Date	No.	Revisions	By
8/08	1		

TEMPORARY CONCRETE WASHOUT FACILITY – BARRIER WALL

Designed L. JOHNSON 8/08
Checked
Approved

WASHOUT BASIN

AUTOCAD2006

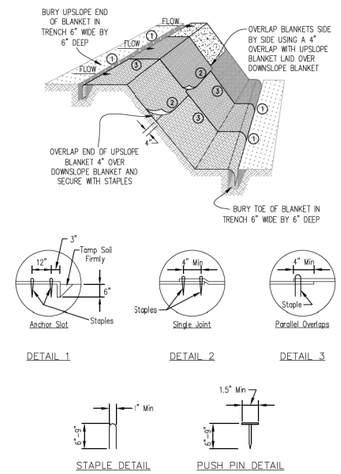

NOTES:

1. Staples shall be placed in a diamond pattern at 2 per s.y. for stiched blankets. Non-stiched shall use 4 staples per s.y. of material. This equates to 200 staples with stiched blanket and 400 stapels with non-stiched blanket per 100 s.y. of material.
2. Staple or push pin lengths shall be selected based on soil type and conditions. (minimum staple length is 6")
3. Erosion control material shall be placed in contact with the soil over a prepared seedbed.
4. All anchor slots shall be stapled at approximately 12" intervals.

Date	No.	Revisions	By
11/08	1		

EROSION CONTROL BLANKET INSTALLATION DETAILS

Designed L. JOHNSON 11/08
Checked
Approved

STABILIZED CONSTRUCTION ENTRANCE PLAN

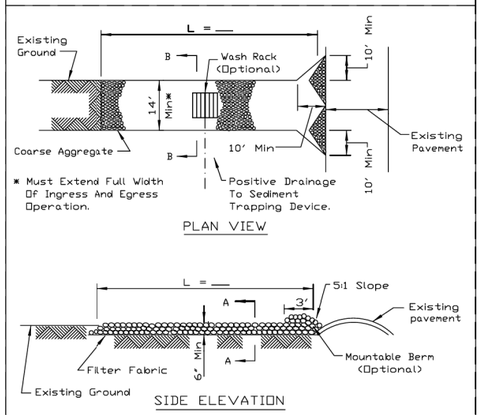

NOTES:

1. Filter fabric shall meet the requirements of material specification 592 GEOTEXTILE, Table I or 2, Class I, II or IV and shall be placed over the cleared area prior to the placing of rock.
2. Rock or reclaimed concrete shall meet one of the following IDOT coarse aggregate gradation, CA-1, CA-2, CA-3 or CA-4 and be placed according to construction specification 25 ROCKFILL using placement Method 1 and Class III compaction.
3. Any drainage facilities required because of washing shall be constructed according to manufacturers specifications.
4. If wash racks are used they shall be installed according to the manufacturer's specifications.

REFERENCE
Project
Designed Date
Checked Date
Approved Date

NRCS Natural Resources Conservation Service

STANDARD DWG. NO. IL-630
SHEET 1 OF 2
DATE 8-18-94

STABILIZED CONSTRUCTION ENTRANCE PLAN

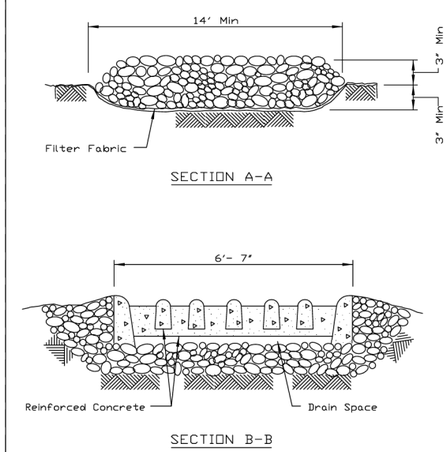

REFERENCE
Project
Designed Date
Checked Date
Approved Date

NRCS Natural Resources Conservation Service

STANDARD DWG. NO. IL-630
SHEET 2 OF 2
DATE 8-18-94

SILT FENCE PLAN

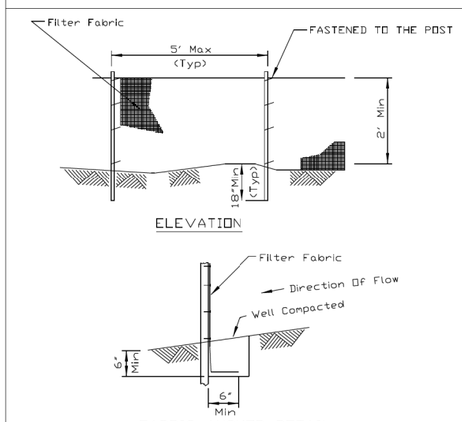

NOTES:

1. Temporary sediment fence shall be installed prior to any grading work in the area to be protected. They shall be maintained throughout the construction period and removed in conjunction with the final grading and site stabilization.
2. Filter fabric shall meet the requirements of material specification 592 Geotextile Table 1, Class 2.
3. Fence posts shall be either standard steel post or wood post 2" X 2" nominal.

REFERENCE
Project
Designed Date
Checked Date
Approved Date

STANDARD DWG. NO. IUM-620A
SHEET 1 OF 2
DATE 04-15-2021

PERIMETER EROSION BARRIER

SILT FENCE - SPLICING TWO FENCES

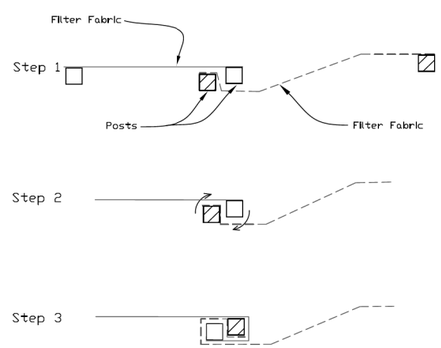

1. Place the end post of the second fence inside the end post of the first fence.
2. Rotate both posts at least 180 degrees in a clockwise direction to create a tight seal with the fabric material.
3. Cut the fabric near the bottom of the stakes to accommodate the 6" flap.
4. Drive both posts a minimum of 18 inches into the ground and bury the flap.
5. Compact backfill (particularly at splices) completely to prevent stormwater piping.

REFERENCE
Project
Designed Date
Checked Date
Approved Date

STANDARD DWG. NO. IUM-620B(W)
SHEET 1 OF 1
DATE 3-16-2012

PIPE OUTLET TO FLAT AREA

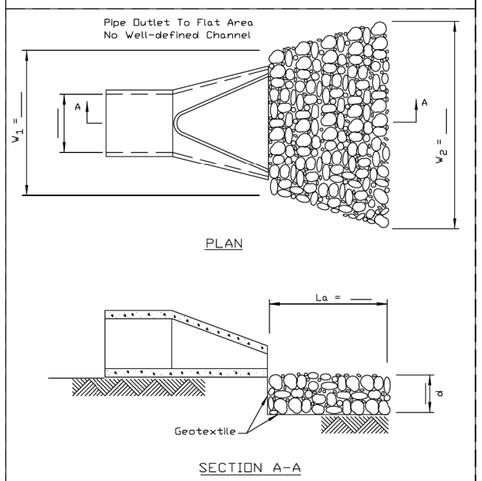

NOTES:

1. The filter fabric shall meet the requirements in material specifications 592 GEOTEXTILE Table 1 or 2, class I, II or III .
2. The rock riprap shall shall meet the IDOT requirements for the following gradation: RR _____ , Quality _____ .
3. The riprap shall be placed according to construction specification 61 LOOSE ROCK RIPRAP. The rock may be equipment placed.

REFERENCE
Project
Designed Date
Checked Date
Approved Date

NRCS Natural Resources Conservation Service

STANDARD DWG. NO. IL-610
SHEET 1 OF 1
DATE 9-15-93

INLET PROTECTION - PAVED AREAS DROP-IN PROTECTION

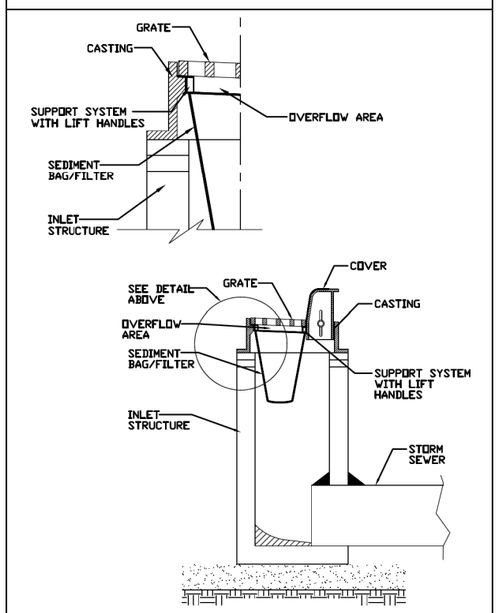

REFERENCE
Project
Designed Date
Checked Date
Approved Date

STANDARD DWG. NO. IUM-561D
SHEET 1 OF 1
DATE 01-11-11

FILE NAME =	USER NAME = mthomas	DESIGNED -	REVISED -
N:\SCHILLERPARK\230454\Civil\DET_230454_01.SHT		DRAWN -	REVISED -
	PLOT SCALE = 40'	CHECKED -	REVISED -
Default	PLOT DATE = 9/6/2024	DATE -	REVISED -

STATE OF ILLINOIS
DEPARTMENT OF TRANSPORTATION

DES PLAINES RIVER TRAIL – SEGMENT 4
CONSTRUCTION DETAILS

SCALE: 1:40 | SHEET OF SHEETS | STA. TO STA.

F.A. RTE.	SECTION	COUNTY	TOTAL SHEETS	SHEET NO.
N/A	17-00034-05-BT	COOK	86	53

CONTRACT NO. 61K54

ILLINOIS FED. AID PROJECT

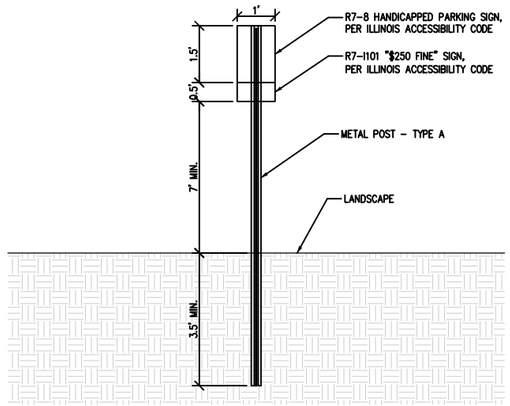

NOTES
1. REFER TO IDOT METAL POSTS FOR SIGNS, MARKERS & DELINEATORS STANDARD FOR MORE INFORMATION.
2. REFER TO IDOT APPLICATIONS OF TYPES A & B METAL POSTS STANDARD FOR MORE INFORMATION

ADA SIGNS AND POSTS

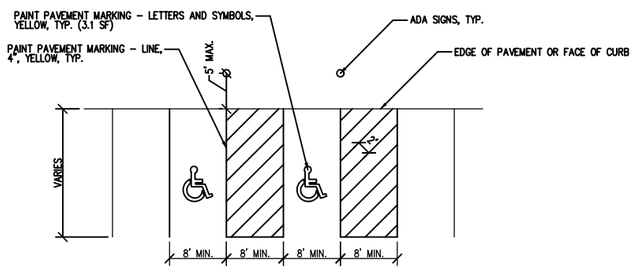

ADA PAVEMENT MARKINGS

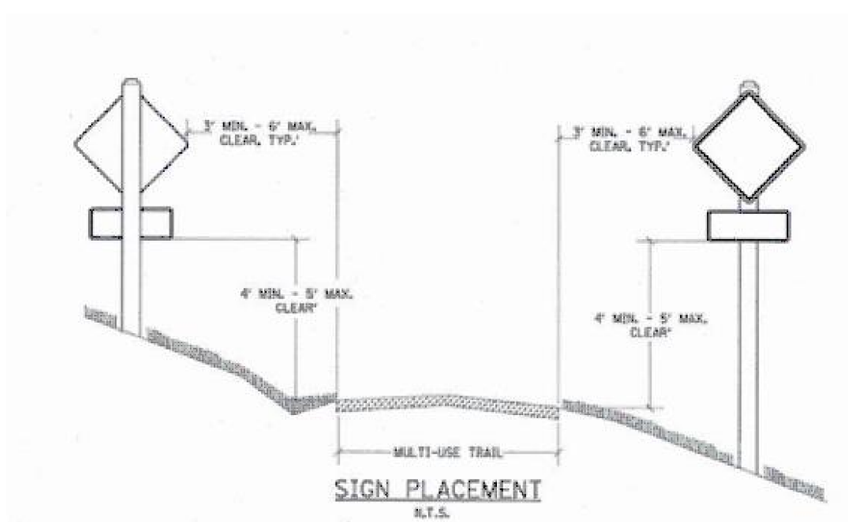

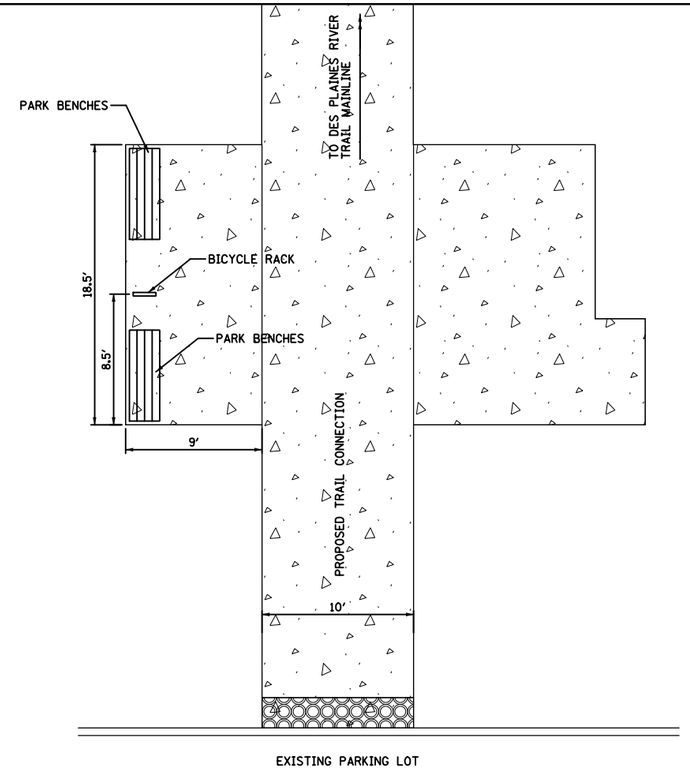

PARK BENCH AND BICYCLE RACK PLACEMENT

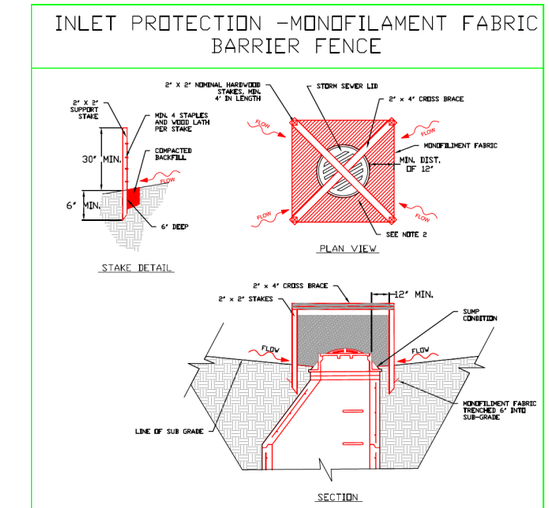

NOTES:
1. 2 x 2 nominal hardwood stakes, 4 foot minimum length, driven into ground approximately 18 inches, stakes driven a minimum width of 12 inches away from the drop inlet.
2. Area inside the fence, from edge of fabric to structure, must be stabilized with Erosion Control Blanket, Turf Reinforcement Mat, Geotextile 592 Table 2 Class 2 or CA-7 stone
3. Maximum height of the fabric above the crest of the drop inlet shall be 30". Place the bottom 6 inches of the fabric in a trench and backfill with 6 inches of 95% compacted soil.
4. Stakes must be a maximum of 4 feet apart.
5. A maintenance schedule must maintain a sediment accumulation of less than 50% of the height of the monofilment fabric.
6. Monofilment fabric shall meet the requirement of Material Specification 592 Geotextile Table 1, Class 4.
7. Monofilment fabric shall be secured to each 2" x 2" nominal hardwood stake with a minimum of 4 steel staple fasteners and wood lath. Wood lath shall be a minimum length of 10 inches. Wire fasteners should be used if metal T-Posts are installed in place of hardwood stakes.

REFERENCE		STANDARD DWG. NO.
Project		IUM-531
Designed ____ Date ____		SHEET 1 OF 1
Checked ____ Date ____		DATE 04-6-15
Approved ____ Date ____		

INLET PROTECTION (PAID FOR AS PERIMETER EROSION BARRIER)

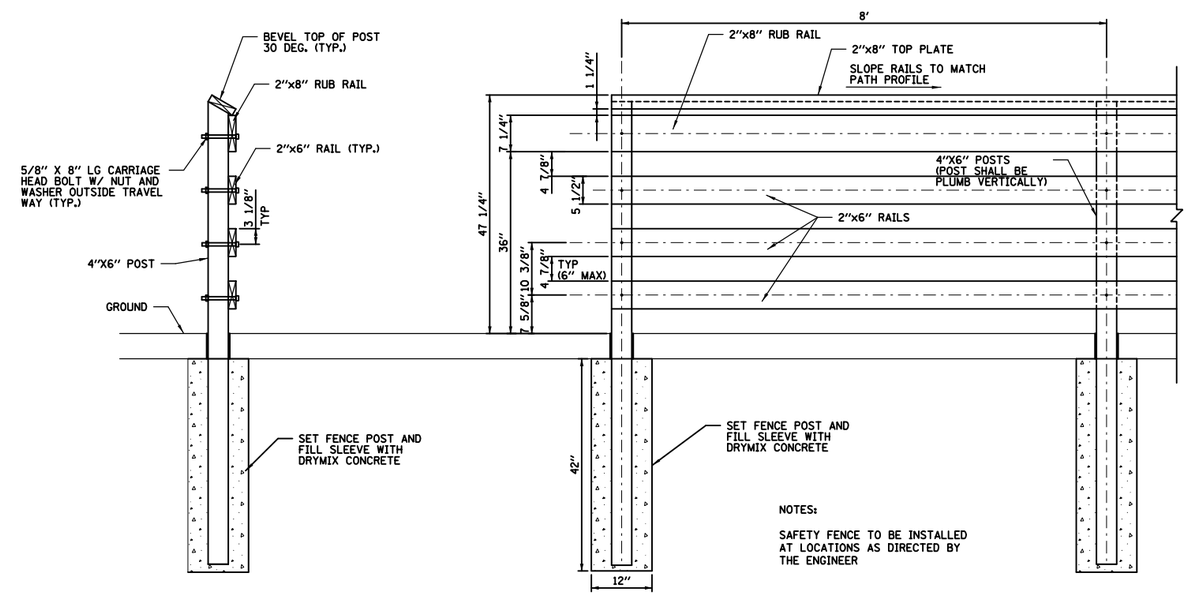

NOTES:

SAFETY FENCE TO BE INSTALLED AT LOCATIONS AS DIRECTED BY THE ENGINEER

SAFETY FENCE

FILE NAME = N:\SCHILLERPARK\230454\Civil\DET_230454_02.SHT	USER NAME = mthomas	DESIGNED -	REVISED -
	PLOT SCALE = 40'	DRAWN -	REVISED -
Default	PLOT DATE = 9/6/2024	CHECKED -	REVISED -
		DATE -	REVISED -

STATE OF ILLINOIS
DEPARTMENT OF TRANSPORTATION

DES PLAINES RIVER TRAIL - SEGMENT 4
CONSTRUCTION DETAILS

SCALE: 1:40 | SHEET OF SHEETS | STA. TO STA.

F.A. RTE.	SECTION	COUNTY	TOTAL SHEETS	SHEET NO.
N/A	17-00034-05-BT	COOK	86	54
		CONTRACT NO. 61K54		
	ILLINOIS	FED. AID PROJECT		

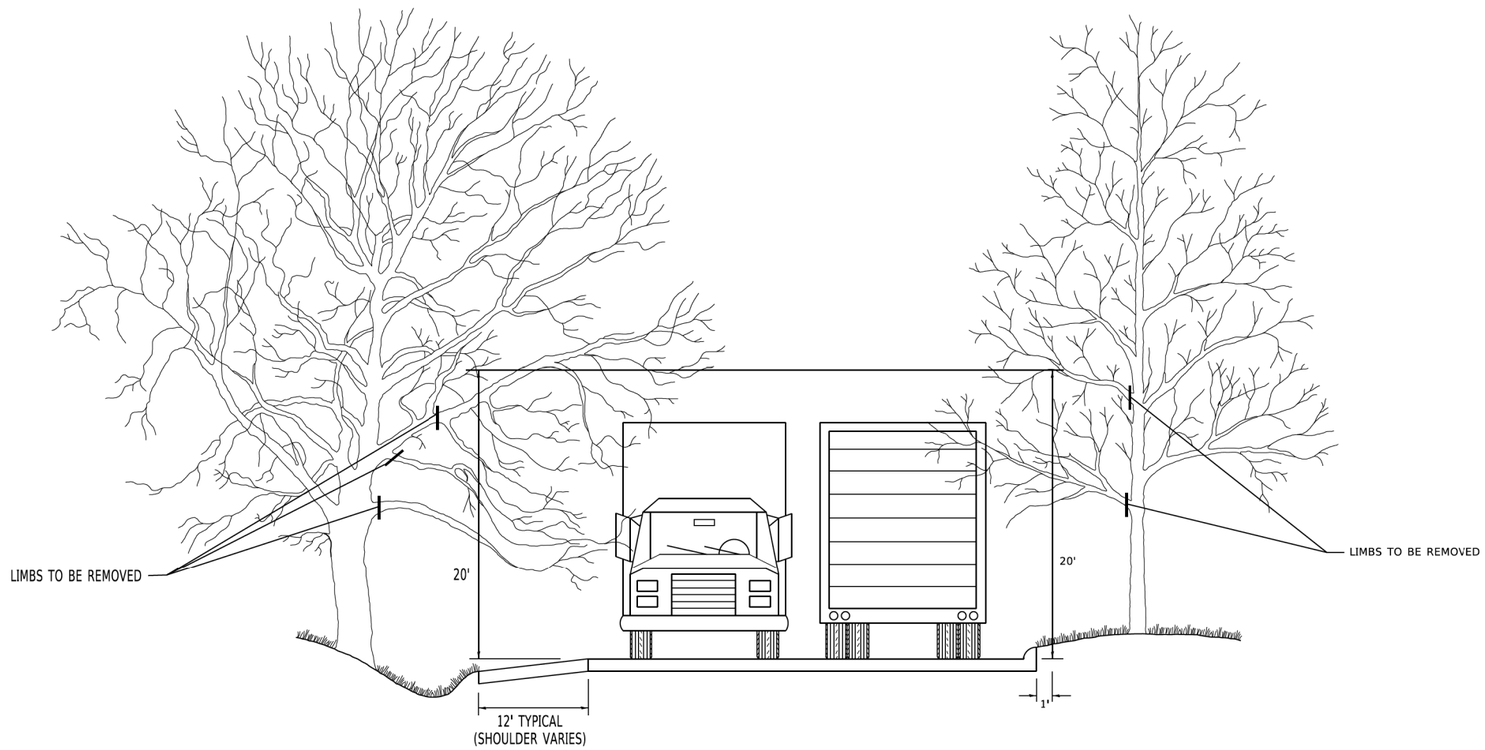

NOTE:
TREE PRUNING DETAIL TO BE USED FOR TRAIL INSTEAD OF ROADWAY

MODEL: Default
FILE NAME: pw:\\planroom.dot.illinois.gov:PWIDOT\Documents\IDOT Offices\District 1\Projects\DistStd22x34\CADData\CADsheets\bm20.dgn

USER NAME = footemj	DESIGNED -	REVISED - R. BORO 10-31-06	
	DRAWN -	REVISED -	
PLOT SCALE = 50.0000 ' / in.	CHECKED -	REVISED -	
PLOT DATE = 3/11/2019	DATE -	REVISED -	

STATE OF ILLINOIS
DEPARTMENT OF TRANSPORTATION

PRUNING FOR SAFETY AND EQUIPMENT CLEARANCE

SCALE: NONE | SHEET 1 OF 1 SHEETS | STA. TO STA.

F.A. RTE.	SECTION	COUNTY	TOTAL SHEETS	SHEET NO.
	17-00034-05-BT	COOK	86	55
	BM-20	CONTRACT NO. 61K54		
	ILLINOIS	FED. AID PROJECT		

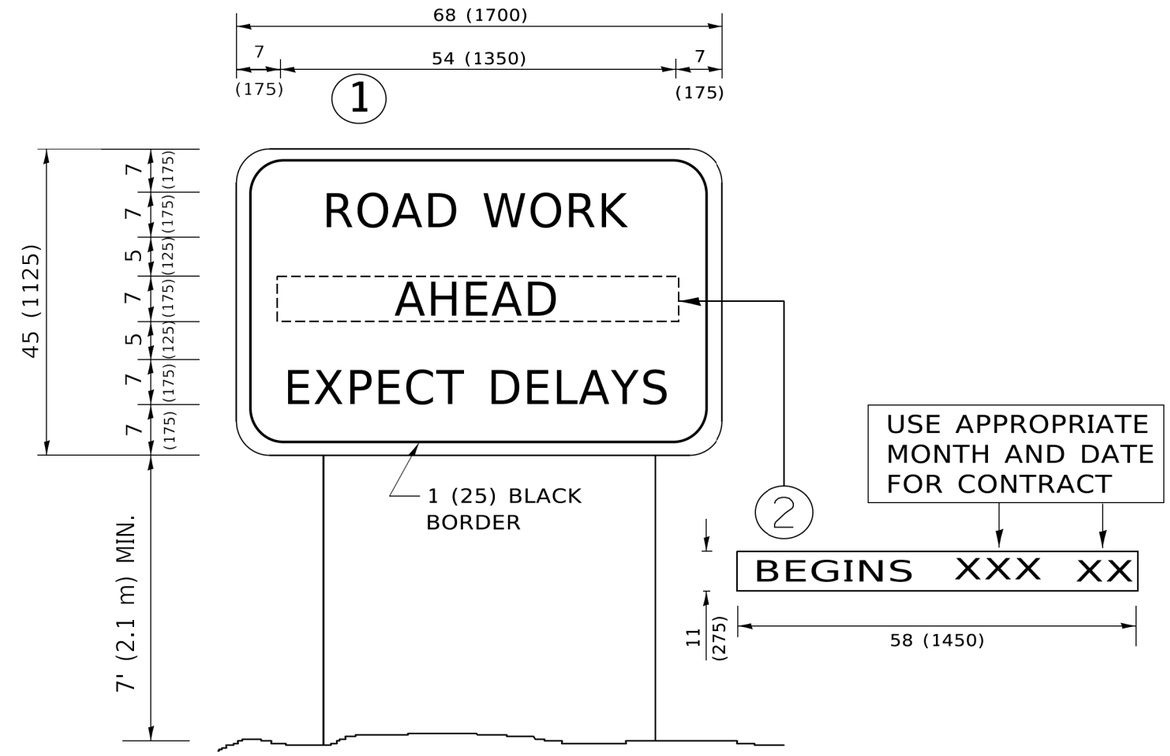

NOTES:

1. USE BLACK LETTERING ON ORANGE BACKGROUND.
2. ERECT SIGNS IN ADVANCE OF THE LOCATION FOR THE "ROAD CONSTRUCTION AHEAD" SIGN AT LOCATIONS AS DIRECTED BY THE ENGINEER.
3. ERECT SIGN (1) WITH INSTALLED PANEL (2) ONE WEEK PRIOR TO THE START OF CONSTRUCTION.
4. REMOVE PANEL (2) SOON AFTER THE START OF CONSTRUCTION.
5. SEE SPECIAL PROVISION FOR "TEMPORARY INFORMATION SIGNING" FOR ADDITIONAL INFORMATION.
6. ONE SIGN ASSEMBLY EQUALS 25.70 SQ. FT. (2.3 SQ. M.)
7. SHALL BE PAID FOR AS TEMPORARY INFORMATION SIGNING.

ALL DIMENSIONS ARE IN INCHES (MILLIMETERS) UNLESS OTHERWISE SHOWN.

MODEL: Default
FILE NAME: pw:\\IL084EBIDINTEG.illinois.gov:PWIDOT\Documents\IDOT Offices\District 1\Projects\Dist5\d22x34\CADdata\CADsheets\tc22.dgn

USER NAME = footemj	DESIGNED -	REVISED - R. MIRS 09-15-97	STATE OF ILLINOIS DEPARTMENT OF TRANSPORTATION	ARTERIAL ROAD INFORMATION SIGN			F.A. RTE.	SECTION	COUNTY	TOTAL SHEETS / SHEET NO.
	DRAWN -	REVISED - R. MIRS 12-11-97						17-00034-05-BT	C00K	86 / 56
PLOT SCALE = 50.0000 ' / in.	CHECKED -	REVISED - T. RAMMACHER 02-02-99					TC-22		CONTRACT NO. 61K54	
PLOT DATE = 3/4/2019	DATE -	REVISED - C. JUCIUS 01-31-07		SCALE: NONE	SHEET 1 OF 1 SHEETS	STA. TO STA.		ILLINOIS	FED. AID PROJECT	

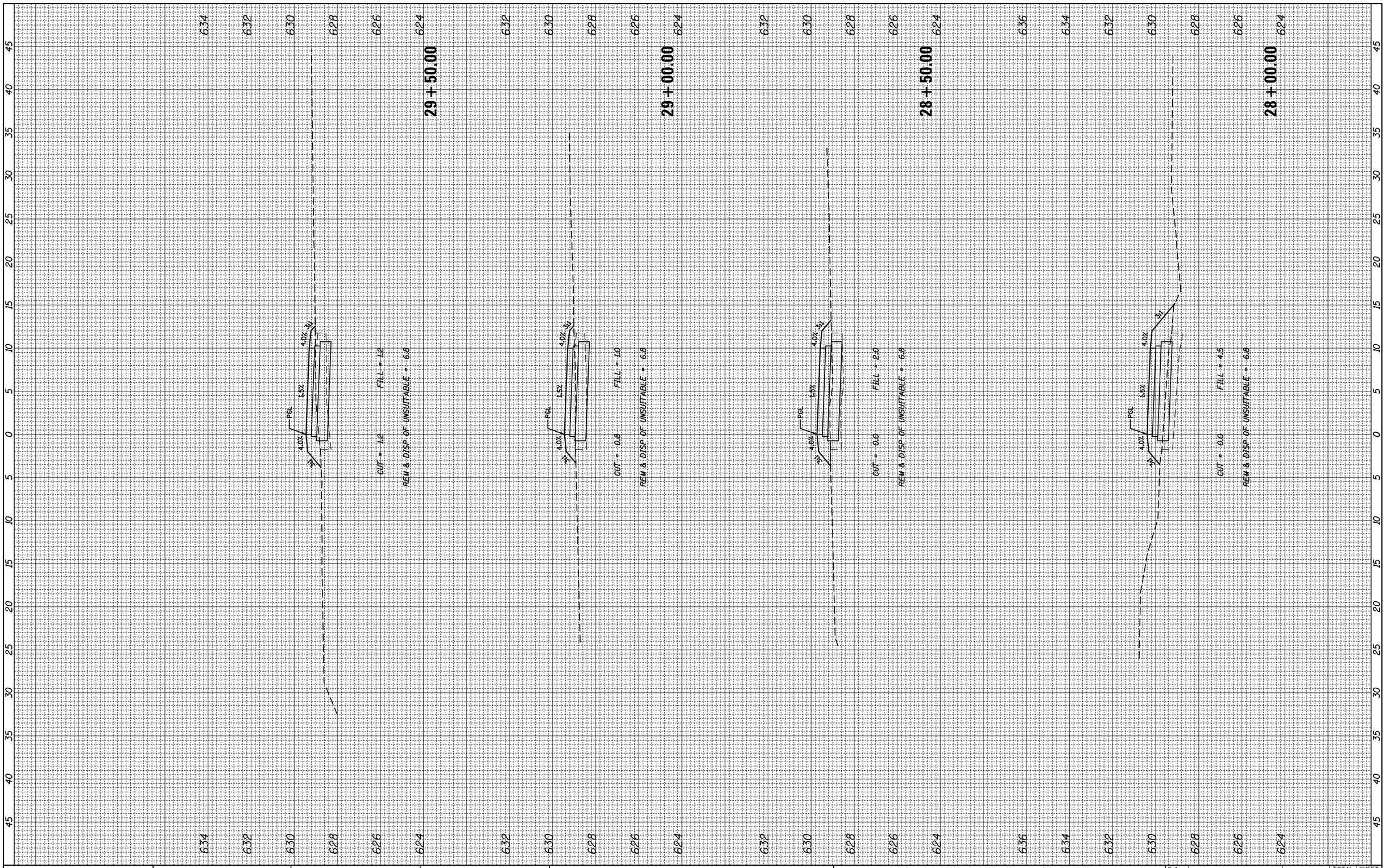

FINAL SURVEY		BY	DATE
	SURVEYED		
	PLOTTED		
NOTE BOOK	TEMPLATE		
	AREAS		
	AREAS CHECKED		
NO.			

ORIGINAL SURVEY		BY	DATE
	SURVEYED		
	PLOTTED		
NOTE BOOK	TEMPLATE		
	AREAS		
	AREAS CHECKED		
NO.			

FILE NAME = N:\SCHILLERPARK\230454\Civil\XS_IRV_230454.SHT	USER NAME = mthomas	DESIGNED -	REVISED -
		DRAWN -	REVISED -
	PLOT SCALE = 10'	CHECKED -	REVISED -
Default	PLOT DATE = 9/18/2024	DATE -	REVISED -

STATE OF ILLINOIS
DEPARTMENT OF TRANSPORTATION

DES PLAINES RIVER TRAIL SEGMENT 4
CROSS SECTIONS
IRVING PARK ROAD CONNECTOR TRAIL

SCALE: | SHEET OF SHEETS | STA. 28+00.00 TO STA. 29+50.00

F.A. RTE.	SECTION	COUNTY	TOTAL SHEETS	SHEET NO.
N/A	17-00034-05-BT	COOK	86	57

CONTRACT NO. 61K54

ILLINOIS FED. AID PROJECT

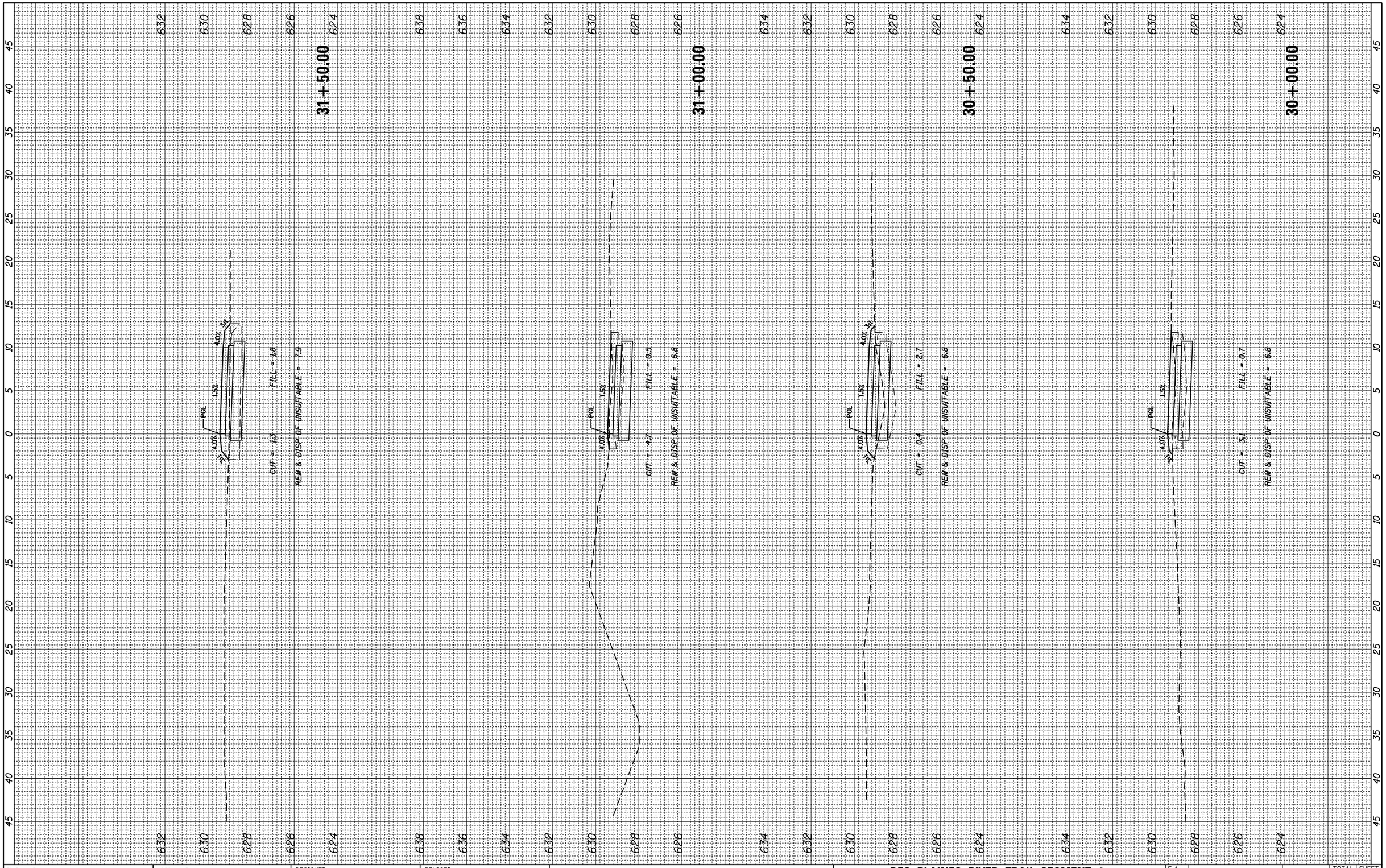

FINAL SURVEY	BY	DATE
SURVEYED		
PLOTTED		
TEMPLATE		
AREAS		
AREAS CHECKED		
NOTE BOOK		
NO.		

ORIGINAL SURVEY	BY	DATE
SURVEYED		
PLOTTED		
TEMPLATE		
AREAS		
AREAS CHECKED		
NOTE BOOK		
NO.		

FILE NAME = N:\SCHILLERPARK\230454\Civil\XS_IRV_230454.SHT	USER NAME = mthomas	DESIGNED -	REVISED -
		DRAWN -	REVISED -
	PLOT SCALE = 10'	CHECKED -	REVISED -
Default	PLOT DATE = 9/18/2024	DATE -	REVISED -

STATE OF ILLINOIS
DEPARTMENT OF TRANSPORTATION

DES PLAINES RIVER TRAIL SEGMENT 4
CROSS SECTIONS
IRVING PARK ROAD CONNECTOR TRAIL

SCALE: | SHEET OF SHEETS | STA. 30+00.00 TO STA. 31+50.00

F.A. RTE.	SECTION	COUNTY	TOTAL SHEETS	SHEET NO.
N/A	17-00034-05-BT	COOK	86	58
		CONTRACT NO. 61K54		
		ILLINOIS FED. AID PROJECT		

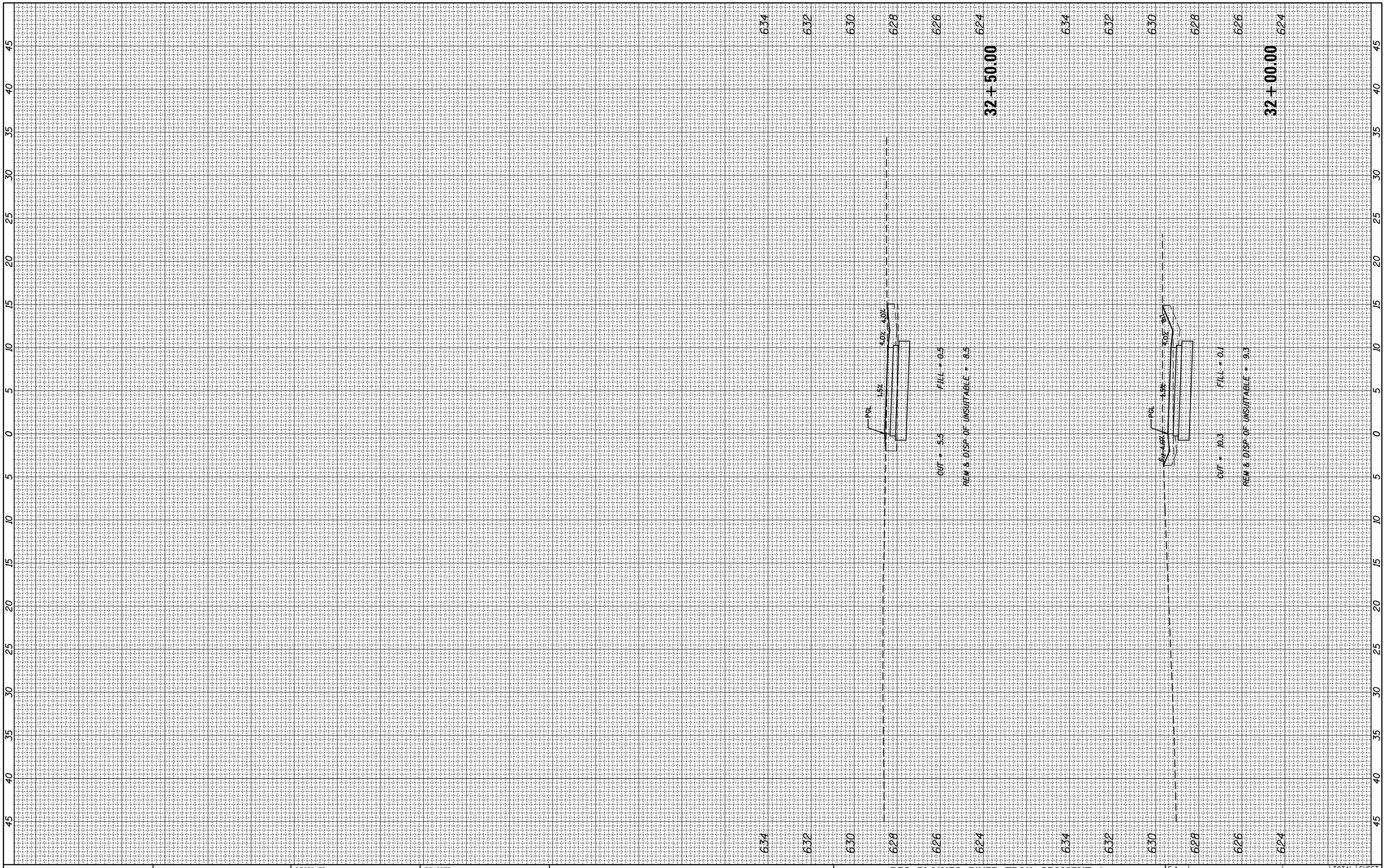

FINAL SURVEY	BY	DATE
SURVEYED		
PLOTTED		
TEMPLATE		
AREAS		
AREAS CHECKED		

NOTE BOOK
NO.

ORIGINAL SURVEY	BY	DATE
SURVEYED		
PLOTTED		
TEMPLATE		
AREAS		
AREAS CHECKED		

NOTE BOOK
NO.

FILE NAME = N:\SCHILLERPARK\230454\Civil\XS_IRV_230454.SHT	USER NAME = mthomas	DESIGNED -	REVISED -
		DRAWN -	REVISED -
	PLOT SCALE = 10'	CHECKED -	REVISED -
Default	PLOT DATE = 9/18/2024	DATE -	REVISED -

STATE OF ILLINOIS
DEPARTMENT OF TRANSPORTATION

DES PLAINES RIVER TRAIL SEGMENT 4
CROSS SECTIONS
IRVING PARK ROAD CONNECTOR TRAIL

SCALE: | SHEET OF SHEETS | STA. 32+00.00 TO STA. 32+50.00

F.A. RTE.	SECTION	COUNTY	TOTAL SHEETS	SHEET NO.
N/A	17-00034-05-BT	COOK	86	59
		CONTRACT NO. 61K54		
	ILLINOIS	FED. AID PROJECT		

FINAL SURVEY		BY	DATE
	SURVEYED		
	PLOTTED		
NOTE BOOK	TEMPLATE		
	AREAS		
	AREAS CHECKED		
NO.			

ORIGINAL SURVEY		BY	DATE
	SURVEYED		
	PLOTTED		
NOTE BOOK	TEMPLATE		
	AREAS		
	AREAS CHECKED		
NO.			

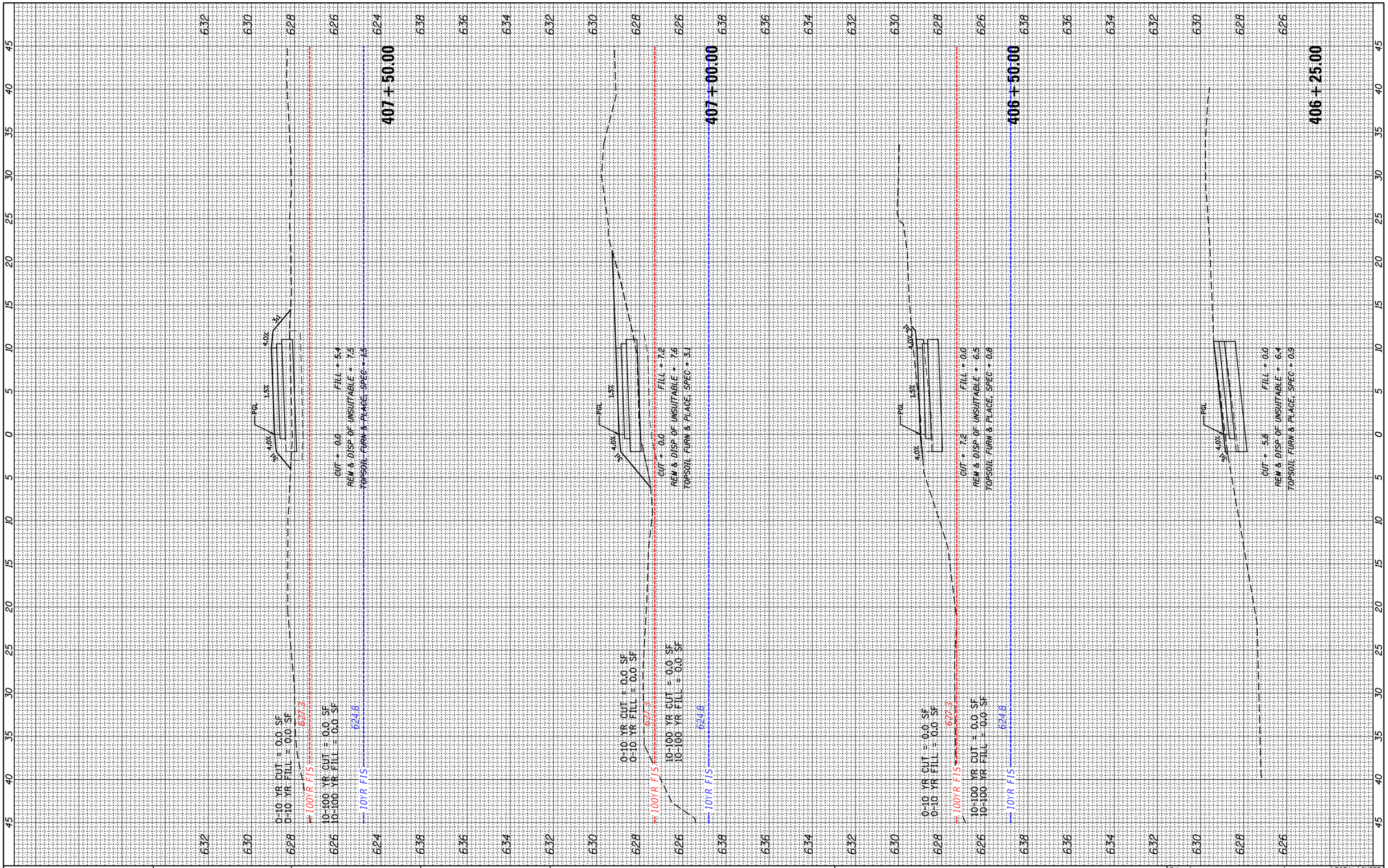

FILE NAME = N:\SCHILLERPARK\230454\Civil\XS_DPRT4_230454.SHT	USER NAME = mthomas	DESIGNED -	REVISED -
		DRAWN -	REVISED -
	PLOT SCALE = 10'	CHECKED -	REVISED -
Default	PLOT DATE = 9/18/2024	DATE -	REVISED -

STATE OF ILLINOIS
DEPARTMENT OF TRANSPORTATION

DES PLAINES RIVER TRAIL SEGMENT 4
CROSS SECTIONS
DES PLAINES RIVER TRAIL

SCALE: | SHEET OF SHEETS | STA. 406+25.00 TO STA. 407+50.00

F.A. RTE.	SECTION	COUNTY	TOTAL SHEETS	SHEET NO.
N/A	17-00034-05-BT	COOK	86	60
		CONTRACT NO. 61K54		
		ILLINOIS FED. AID PROJECT		

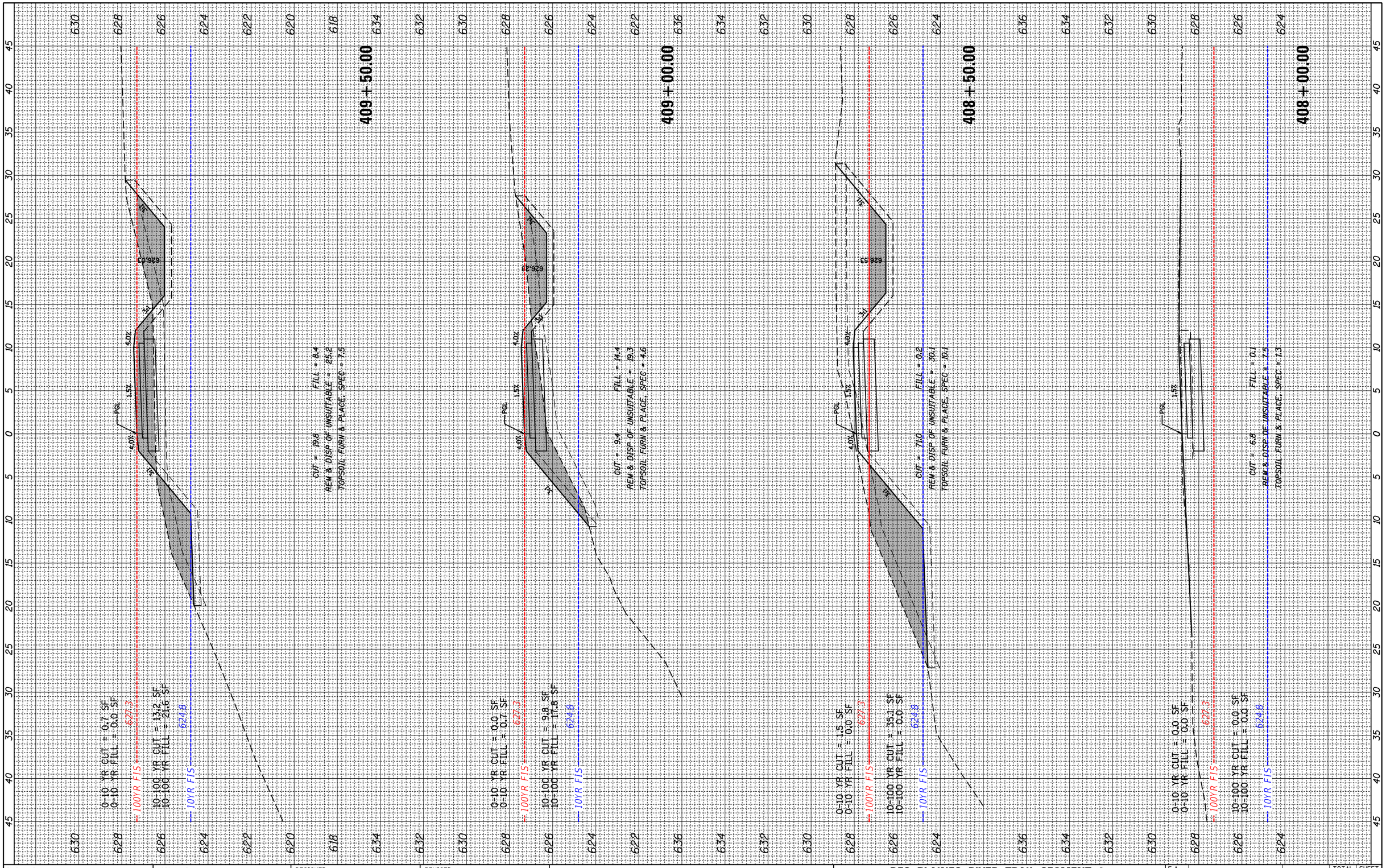

FINAL SURVEY	BY	DATE
SURVEYED		
PLOTTED		
TEMPLATE		
AREAS		
AREAS CHECKED		

NOTE BOOK
NO.

ORIGINAL SURVEY	BY	DATE
SURVEYED		
PLOTTED		
TEMPLATE		
AREAS		
AREAS CHECKED		

NOTE BOOK
NO.

FILE NAME = N:\SCHILLERPARK\230454\Civil\XS_DPRT4_230454.SHT	USER NAME = mthomas	DESIGNED -	REVISED -
		DRAWN -	REVISED -
	PLOT SCALE = 10'	CHECKED -	REVISED -
Default	PLOT DATE = 9/18/2024	DATE -	REVISED -

STATE OF ILLINOIS
DEPARTMENT OF TRANSPORTATION

DES PLAINES RIVER TRAIL SEGMENT 4
CROSS SECTIONS
DES PLAINES RIVER TRAIL

SCALE: | SHEET OF SHEETS | STA. 408+00.00 TO STA. 409+50.00

F.A. RTE.	SECTION	COUNTY	TOTAL SHEETS	SHEET NO.
N/A	17-00034-05-BT	COOK	86	61

CONTRACT NO. 61K54

ILLINOIS FED. AID PROJECT

FINAL SURVEY		BY	DATE
	SURVEYED		
	PLOTTED		
NOTE BOOK	TEMPLATE		
	AREAS		
	AREAS CHECKED		
NO.			

ORIGINAL SURVEY		BY	DATE
	SURVEYED		
	PLOTTED		
NOTE BOOK	TEMPLATE		
	AREAS		
	AREAS CHECKED		
NO.			

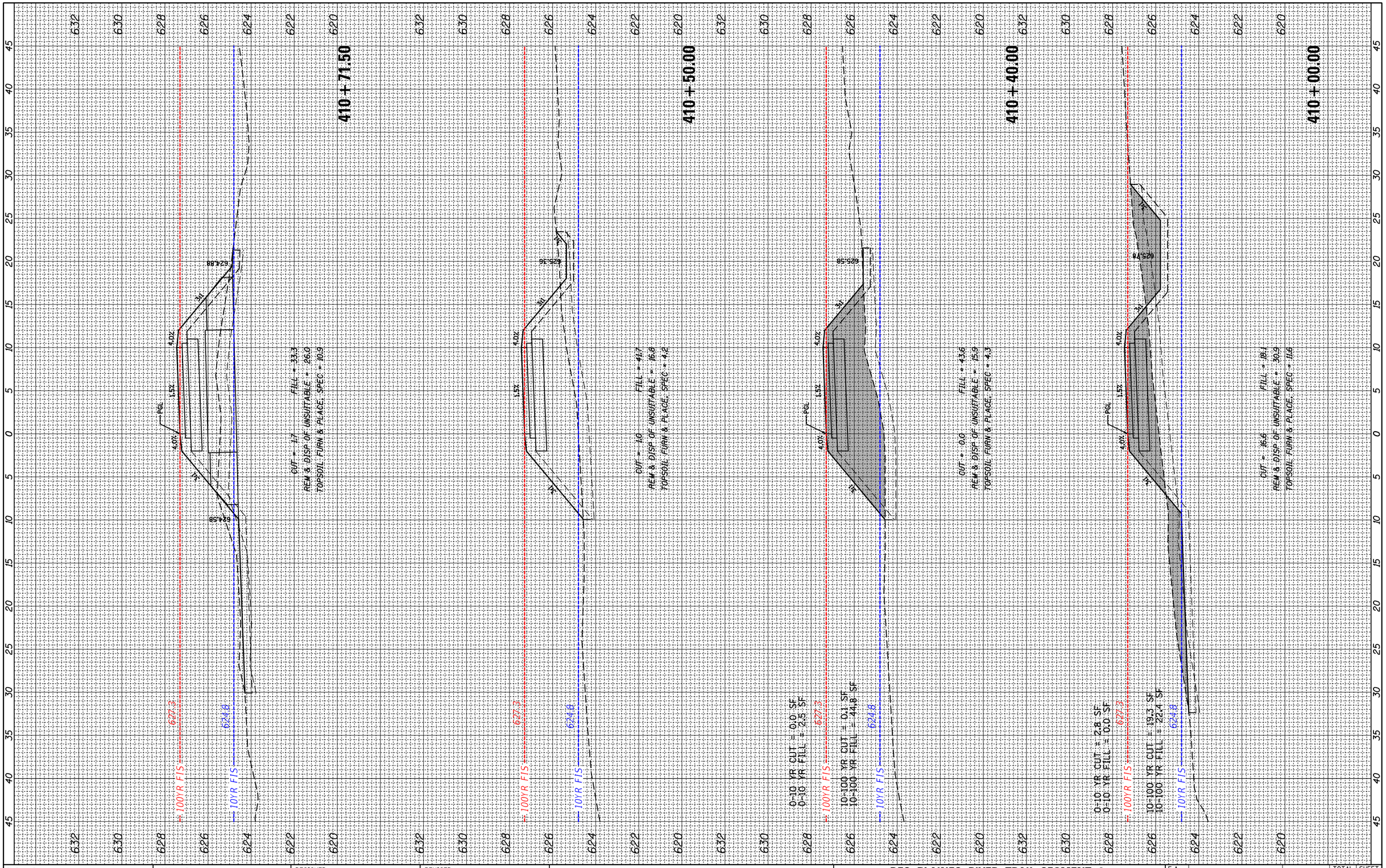

FILE NAME = N:\SCHILLERPARK\230454\Civil\XS_DPRT4_230454.SHT	USER NAME = mthomas	DESIGNED -	REVISED -
		DRAWN -	REVISED -
	PLOT SCALE = 10'	CHECKED -	REVISED -
Default	PLOT DATE = 9/18/2024	DATE -	REVISED -

STATE OF ILLINOIS
DEPARTMENT OF TRANSPORTATION

DES PLAINES RIVER TRAIL SEGMENT 4
CROSS SECTIONS
DES PLAINES RIVER TRAIL

SCALE: | SHEET OF SHEETS | STA. 410+00.00 TO STA. 410+71.50

F.A. RTE.	SECTION	COUNTY	TOTAL SHEETS	SHEET NO.
N/A	17-00034-05-BT	COOK	86	62
		CONTRACT NO. 61K54		
		ILLINOIS FED. AID PROJECT		

FINAL SURVEY		BY	DATE
	SURVEYED		
	PLOTTED		
NOTE BOOK	TEMPLATE		
	AREAS		
	AREAS CHECKED		
NO.			

ORIGINAL SURVEY		BY	DATE
	SURVEYED		
	PLOTTED		
NOTE BOOK	TEMPLATE		
	AREAS		
	AREAS CHECKED		
NO.			

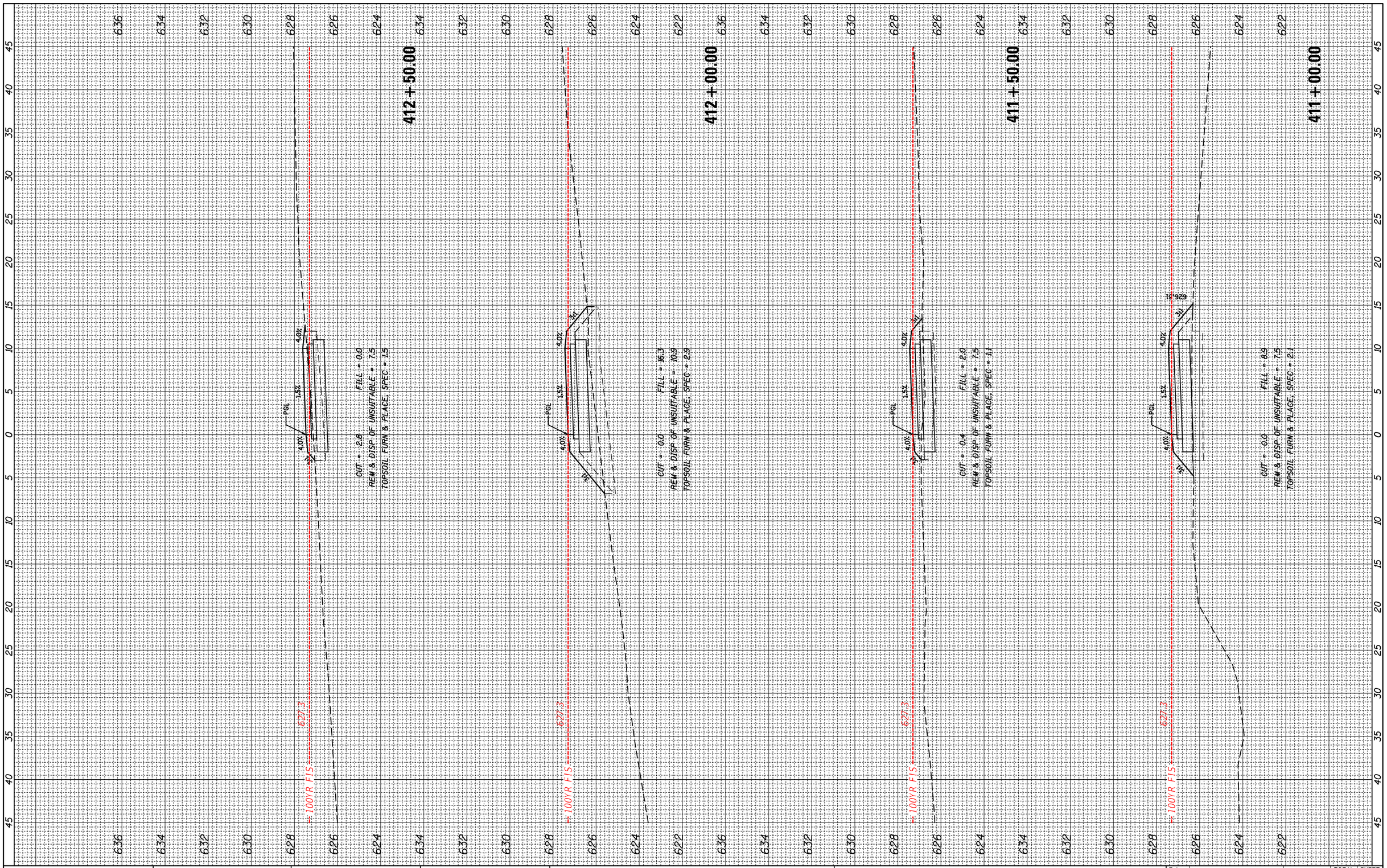

FILE NAME = N:\SCHILLERPARK\230454\Civil\XS_DPRT4_230454.SMT	USER NAME = mthomas	DESIGNED -	REVISED -
		DRAWN -	REVISED -
	PLOT SCALE = 10'	CHECKED -	REVISED -
Default	PLOT DATE = 9/18/2024	DATE -	REVISED -

STATE OF ILLINOIS
DEPARTMENT OF TRANSPORTATION

DES PLAINES RIVER TRAIL SEGMENT 4
CROSS SECTIONS
DES PLAINES RIVER TRAIL

SCALE: | SHEET OF SHEETS | STA. 411+00.00 TO STA. 412+50.00

F.A. RTE.	SECTION	COUNTY	TOTAL SHEETS	SHEET NO.
N/A	17-00034-05-BT	COOK	86	63
		CONTRACT NO. 61K54		
		ILLINOIS FED. AID PROJECT		

FINAL SURVEY		BY	DATE
NOTE BOOK	SURVEYED		
	PLOTTED		
	TEMPLATE		
	AREAS		
	AREAS CHECKED		
NO.			

ORIGINAL SURVEY		BY	DATE
NOTE BOOK	SURVEYED		
	PLOTTED		
	TEMPLATE		
	AREAS		
	AREAS CHECKED		
NO.			

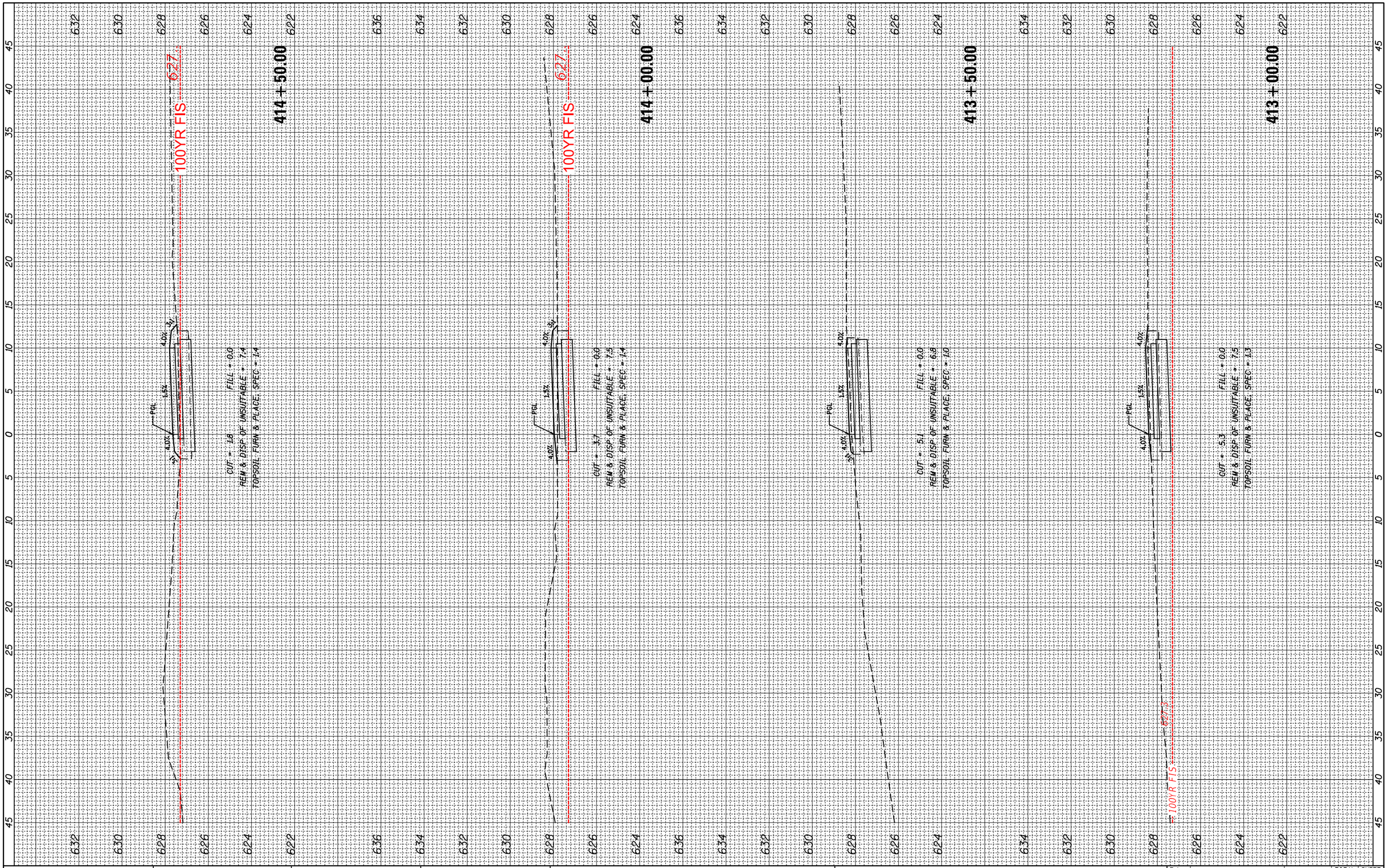

FILE NAME = N:\SCHILLERPARK\230454\Civil\XS_DPRT4_230454.SMT	USER NAME = mthomas	DESIGNED -	REVISED -
		DRAWN -	REVISED -
	PLOT SCALE = 10'	CHECKED -	REVISED -
Default	PLOT DATE = 9/18/2024	DATE -	REVISED -

STATE OF ILLINOIS
DEPARTMENT OF TRANSPORTATION

DES PLAINES RIVER TRAIL SEGMENT 4
CROSS SECTIONS
DES PLAINES RIVER TRAIL

SCALE: | SHEET OF SHEETS | STA. 413+00.00 TO STA. 414+50.00

F.A. RTE.	SECTION	COUNTY	TOTAL SHEETS	SHEET NO.
N/A	17-00034-05-BT	COOK	86	64
		CONTRACT NO. 61K54		
		ILLINOIS FED. AID PROJECT		

FINAL SURVEY		BY	DATE
NOTE BOOK	SURVEYED		
	PLOTTED		
	TEMPLATE		
	AREAS		
	AREAS CHECKED		
NO.			

ORIGINAL SURVEY		BY	DATE
NOTE BOOK	SURVEYED		
	PLOTTED		
	TEMPLATE		
	AREAS		
	AREAS CHECKED		
NO.			

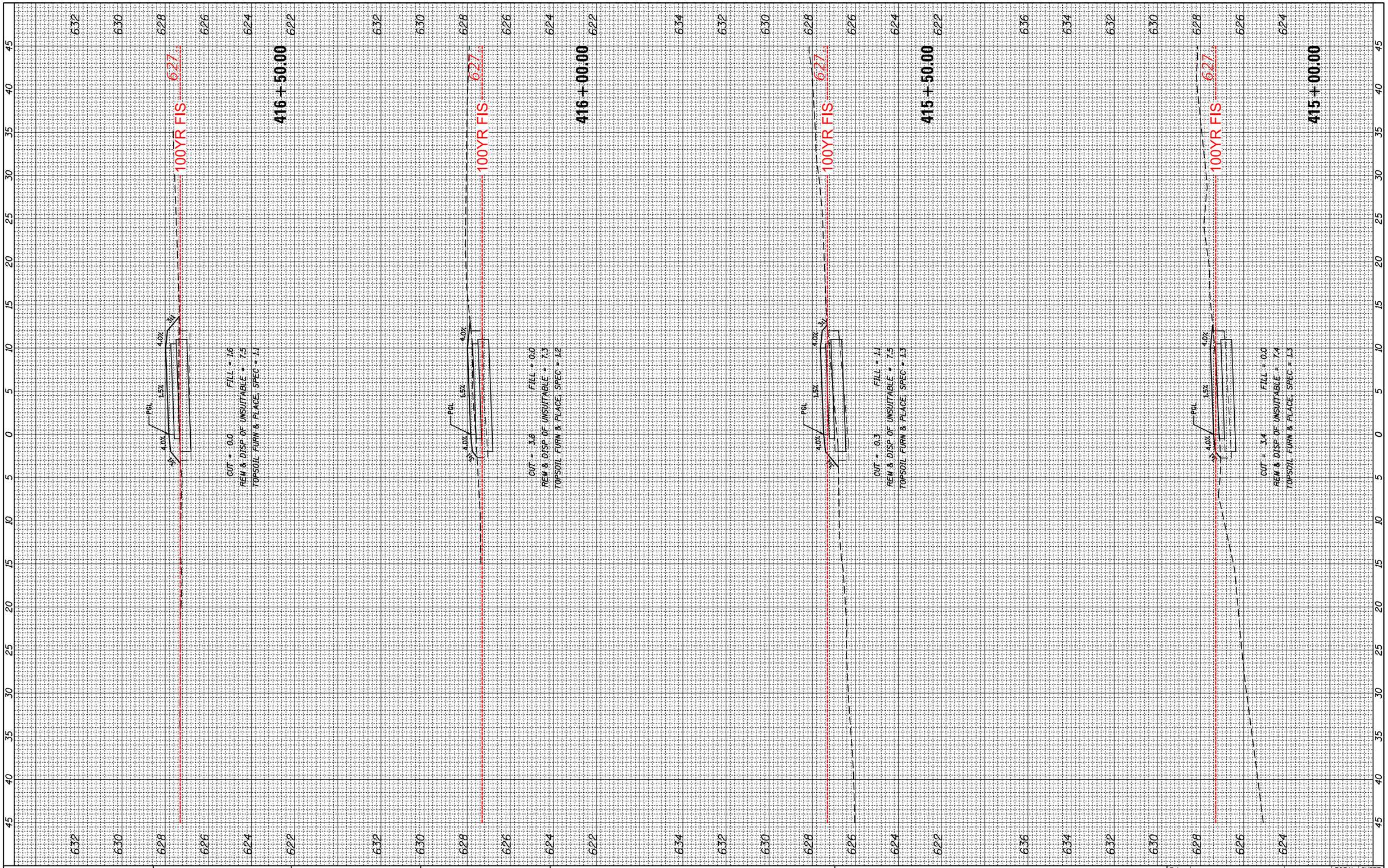

FILE NAME = N:\SCHILLERPARK\230454\Civil\XS_DPRT4_230454.SHT	USER NAME = mthomas	DESIGNED -	REVISED -
		DRAWN -	REVISED -
	PLOT SCALE = 10'	CHECKED -	REVISED -
Default	PLOT DATE = 9/18/2024	DATE -	REVISED -

STATE OF ILLINOIS
DEPARTMENT OF TRANSPORTATION

DES PLAINES RIVER TRAIL SEGMENT 4
CROSS SECTIONS
DES PLAINES RIVER TRAIL

SCALE: | SHEET OF SHEETS | STA. 415+00.00 TO STA. 416+50.00

F.A. RTE.	SECTION	COUNTY	TOTAL SHEETS	SHEET NO.
N/A	17-00034-05-BT	COOK	86	65

CONTRACT NO. 61K54

ILLINOIS FED. AID PROJECT

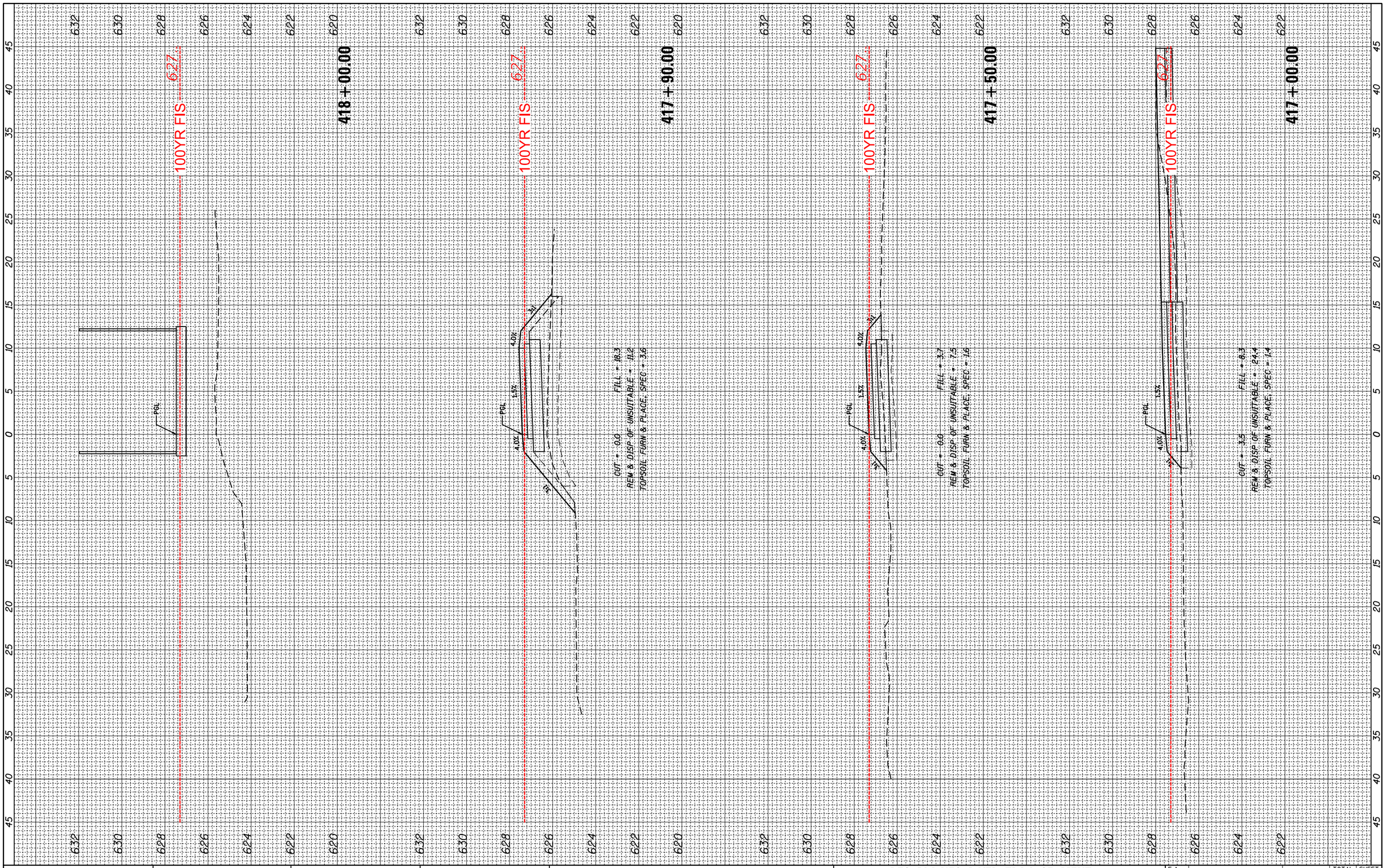

FINAL SURVEY		BY	DATE
	SURVEYED		
	PLOTTED		
NOTE BOOK	TEMPLATE		
	AREAS		
	AREAS CHECKED		
NO.			

ORIGINAL SURVEY		BY	DATE
	SURVEYED		
	PLOTTED		
NOTE BOOK	TEMPLATE		
	AREAS		
	AREAS CHECKED		
NO.			

FILE NAME = N:\SCHILLERPARK\230454\Civil\XS_DPRT4_230454.SHT	USER NAME = mthomas	DESIGNED -	REVISED -
		DRAWN -	REVISED -
	PLOT SCALE = 10'	CHECKED -	REVISED -
Default	PLOT DATE = 9/18/2024	DATE -	REVISED -

STATE OF ILLINOIS
DEPARTMENT OF TRANSPORTATION

DES PLAINES RIVER TRAIL SEGMENT 4
CROSS SECTIONS
DES PLAINES RIVER TRAIL

SCALE: | SHEET OF SHEETS | STA. 417+00.00 TO STA. 418+00.00

F.A. RTE.	SECTION	COUNTY	TOTAL SHEETS	SHEET NO.
N/A	17-00034-05-BT	COOK	86	66
		CONTRACT NO. 61K54		
		ILLINOIS FED. AID PROJECT		

FINAL SURVEY		BY	DATE
NOTE BOOK	SURVEYED		
	PLOTTED		
	TEMPLATE		
	AREAS		
	AREAS CHECKED		
NO.			

ORIGINAL SURVEY		BY	DATE
NOTE BOOK	SURVEYED		
	PLOTTED		
	TEMPLATE		
	AREAS		
	AREAS CHECKED		
NO.			

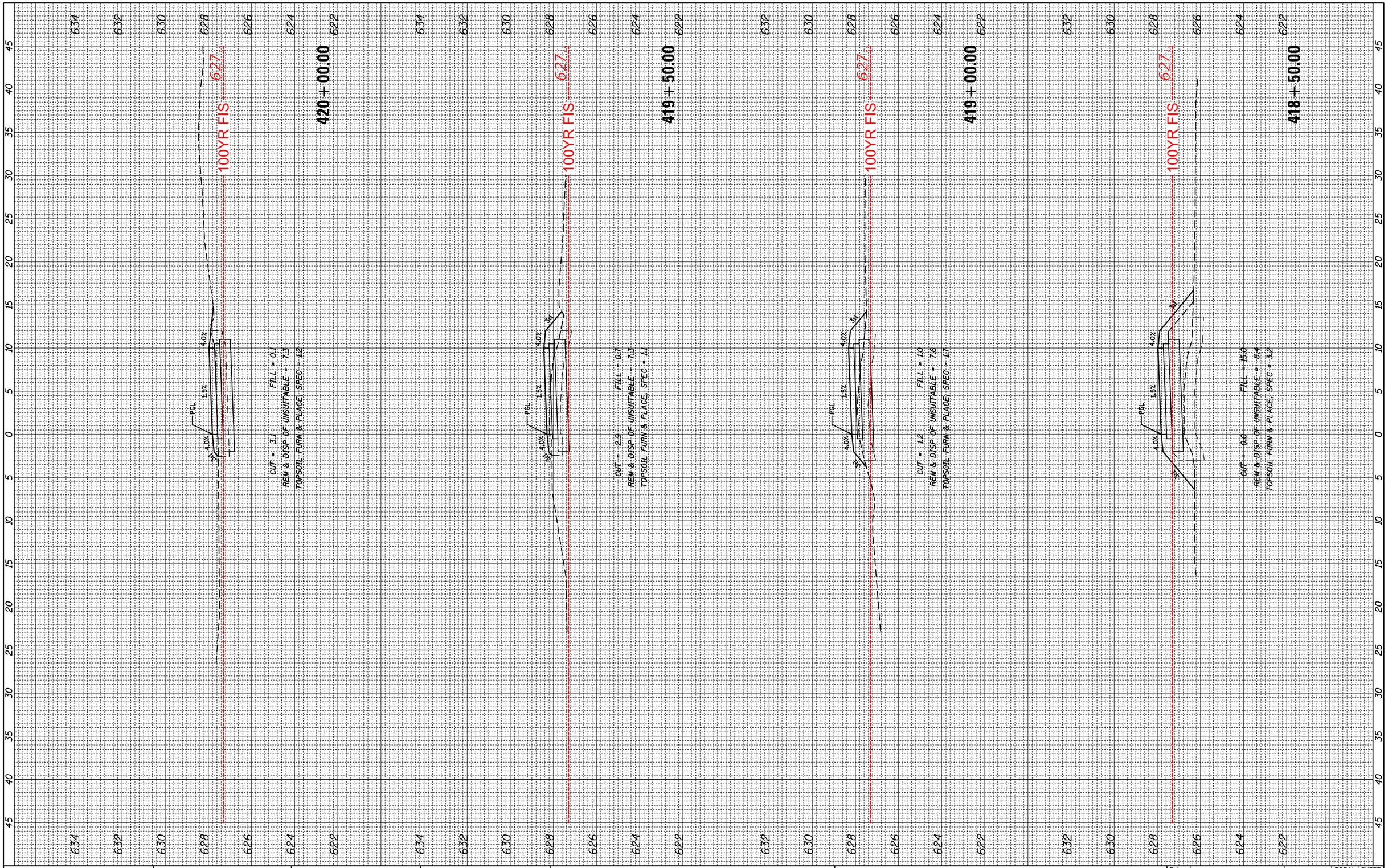

FILE NAME = N:\SCHILLERPARK\230454\Civil\XS_DPRT4_230454.SHT	USER NAME = mthomas	DESIGNED -	REVISED -
		DRAWN -	REVISED -
	PLOT SCALE = 10'	CHECKED -	REVISED -
Default	PLOT DATE = 9/18/2024	DATE -	REVISED -

STATE OF ILLINOIS
DEPARTMENT OF TRANSPORTATION

DES PLAINES RIVER TRAIL SEGMENT 4
CROSS SECTIONS
DES PLAINES RIVER TRAIL

SCALE: | SHEET OF SHEETS | STA. 418+50.00 TO STA. 420+00.00

F.A. RTE.	SECTION	COUNTY	TOTAL SHEETS	SHEET NO.
N/A	17-00034-05-BT	COOK	86	67

CONTRACT NO. 61K54

ILLINOIS FED. AID PROJECT

FINAL SURVEY		BY	DATE
NOTE BOOK	SURVEYED		
	PLOTTED		
	TEMPLATE		
	AREAS		
	AREAS CHECKED		
NO.			

ORIGINAL SURVEY		BY	DATE
NOTE BOOK	SURVEYED		
	PLOTTED		
	TEMPLATE		
	AREAS		
	AREAS CHECKED		
NO.			

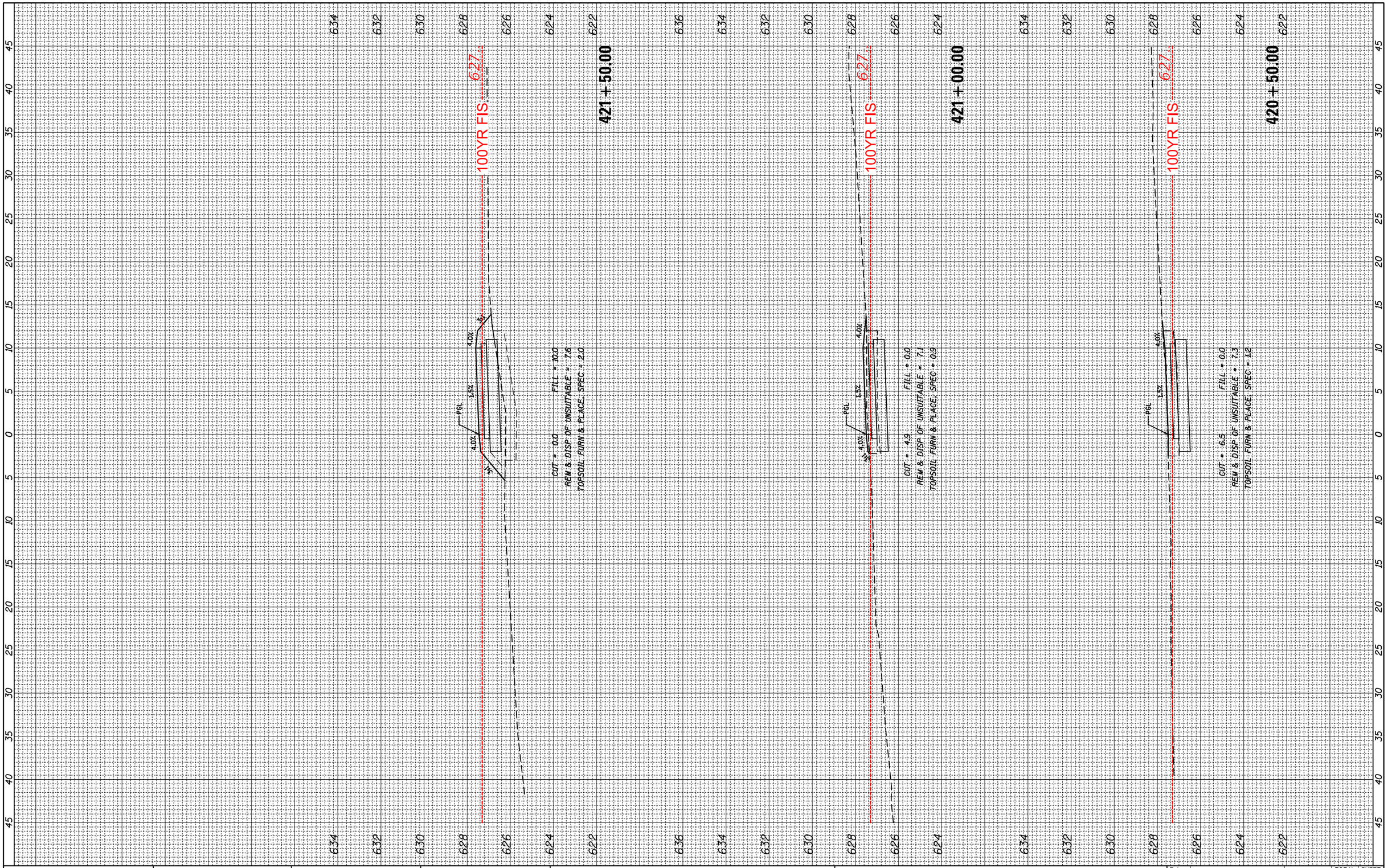

FILE NAME = N:\SCHILLERPARK\230454\Civil\XS_DPRT4_230454.SHT	USER NAME = mthomas	DESIGNED -	REVISED -
		DRAWN -	REVISED -
	PLOT SCALE = 10'	CHECKED -	REVISED -
Default	PLOT DATE = 9/18/2024	DATE -	REVISED -

STATE OF ILLINOIS
DEPARTMENT OF TRANSPORTATION

DES PLAINES RIVER TRAIL SEGMENT 4
CROSS SECTIONS
DES PLAINES RIVER TRAIL

SCALE: | SHEET OF SHEETS | STA. 420+50.00 TO STA. 421+50.00

F.A. RTE.	SECTION	COUNTY	TOTAL SHEETS	SHEET NO.
N/A	17-00034-05-BT	COOK	86	68
		CONTRACT NO. 61K54		
		ILLINOIS FED. AID PROJECT		

FINAL SURVEY		BY	DATE
NOTE BOOK	SURVEYED		
	PLOTTED		
	TEMPLATE		
	AREAS		
	AREAS CHECKED		
NO.			

ORIGINAL SURVEY		BY	DATE
NOTE BOOK	SURVEYED		
	PLOTTED		
	TEMPLATE		
	AREAS		
	AREAS CHECKED		
NO.			

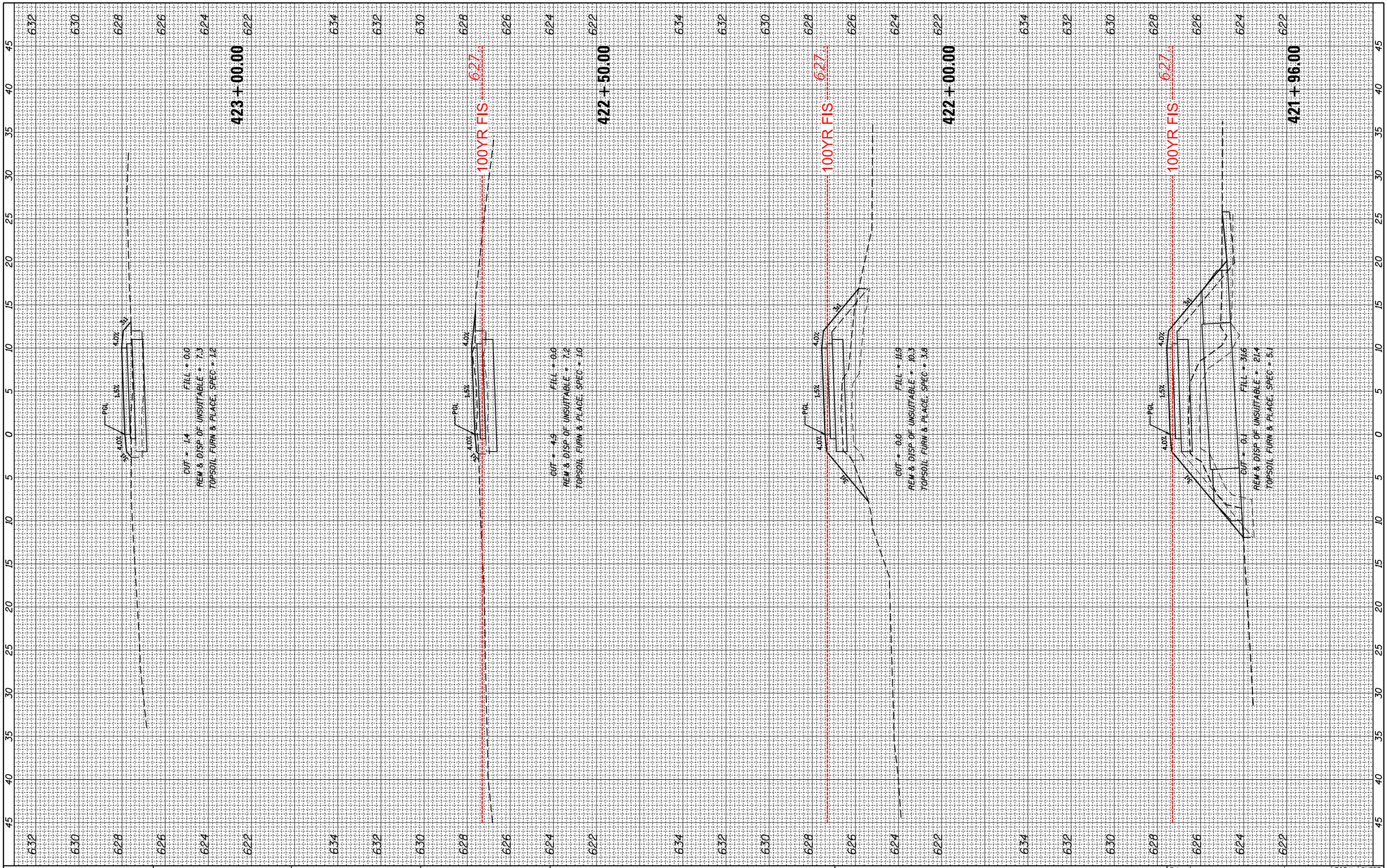

FILE NAME = N:\SCHILLERPARK\230454\Civil\XS_DPRT4_230454.SMT	USER NAME = mthomas	DESIGNED -	REVISED -
		DRAWN -	REVISED -
	PLOT SCALE = 10'	CHECKED -	REVISED -
Default	PLOT DATE = 9/18/2024	DATE -	REVISED -

STATE OF ILLINOIS
DEPARTMENT OF TRANSPORTATION

DES PLAINES RIVER TRAIL SEGMENT 4
CROSS SECTIONS
DES PLAINES RIVER TRAIL

SCALE: | SHEET OF SHEETS | STA. 421+96.00 TO STA. 423+00.00

F.A. RTE.	SECTION	COUNTY	TOTAL SHEETS	SHEET NO.
N/A	17-00034-05-BT	COOK	86	69

CONTRACT NO. 61K54

ILLINOIS FED. AID PROJECT

FINAL SURVEY		BY	DATE
NOTE BOOK	SURVEYED		
	PLOTTED		
	TEMPLATE		
	AREAS		
	AREAS CHECKED		
NO.			

ORIGINAL SURVEY		BY	DATE
NOTE BOOK	SURVEYED		
	PLOTTED		
	TEMPLATE		
	AREAS		
	AREAS CHECKED		
NO.			

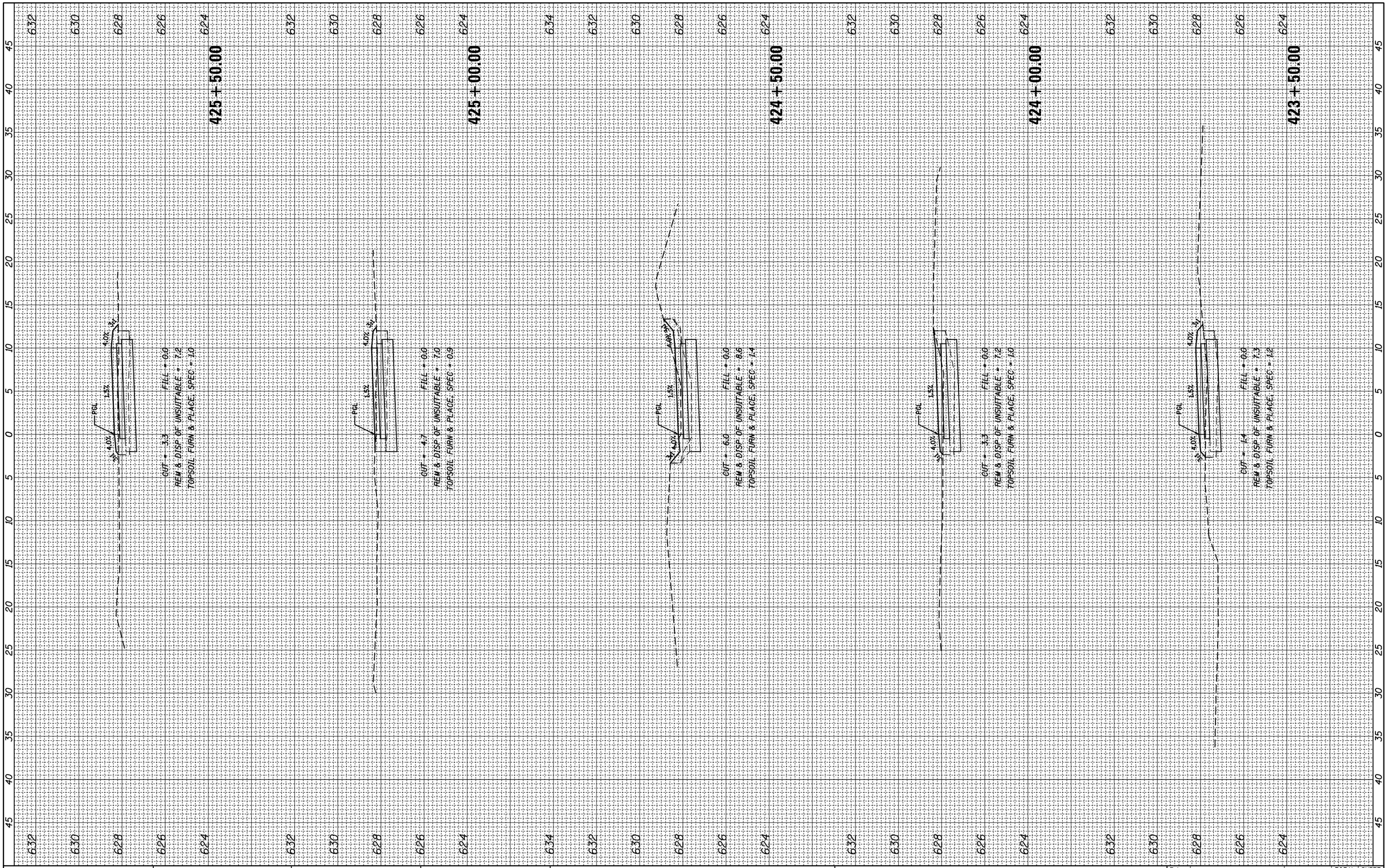

FILE NAME = N:\SCHILLERPARK\230454\Civil\XS_DPRT4_230454.SMT	USER NAME = mthomas	DESIGNED -	REVISED -
		DRAWN -	REVISED -
	PLOT SCALE = 10'	CHECKED -	REVISED -
Default	PLOT DATE = 9/18/2024	DATE -	REVISED -

STATE OF ILLINOIS
DEPARTMENT OF TRANSPORTATION

DES PLAINES RIVER TRAIL SEGMENT 4
CROSS SECTIONS
DES PLAINES RIVER TRAIL

SCALE: | SHEET OF SHEETS | STA. 423+50.00 TO STA. 425+50.00

F.A. RTE.	SECTION	COUNTY	TOTAL SHEETS	SHEET NO.
N/A	17-00034-05-BT	COOK	86	70

CONTRACT NO. 61K54

ILLINOIS | FED. AID PROJECT

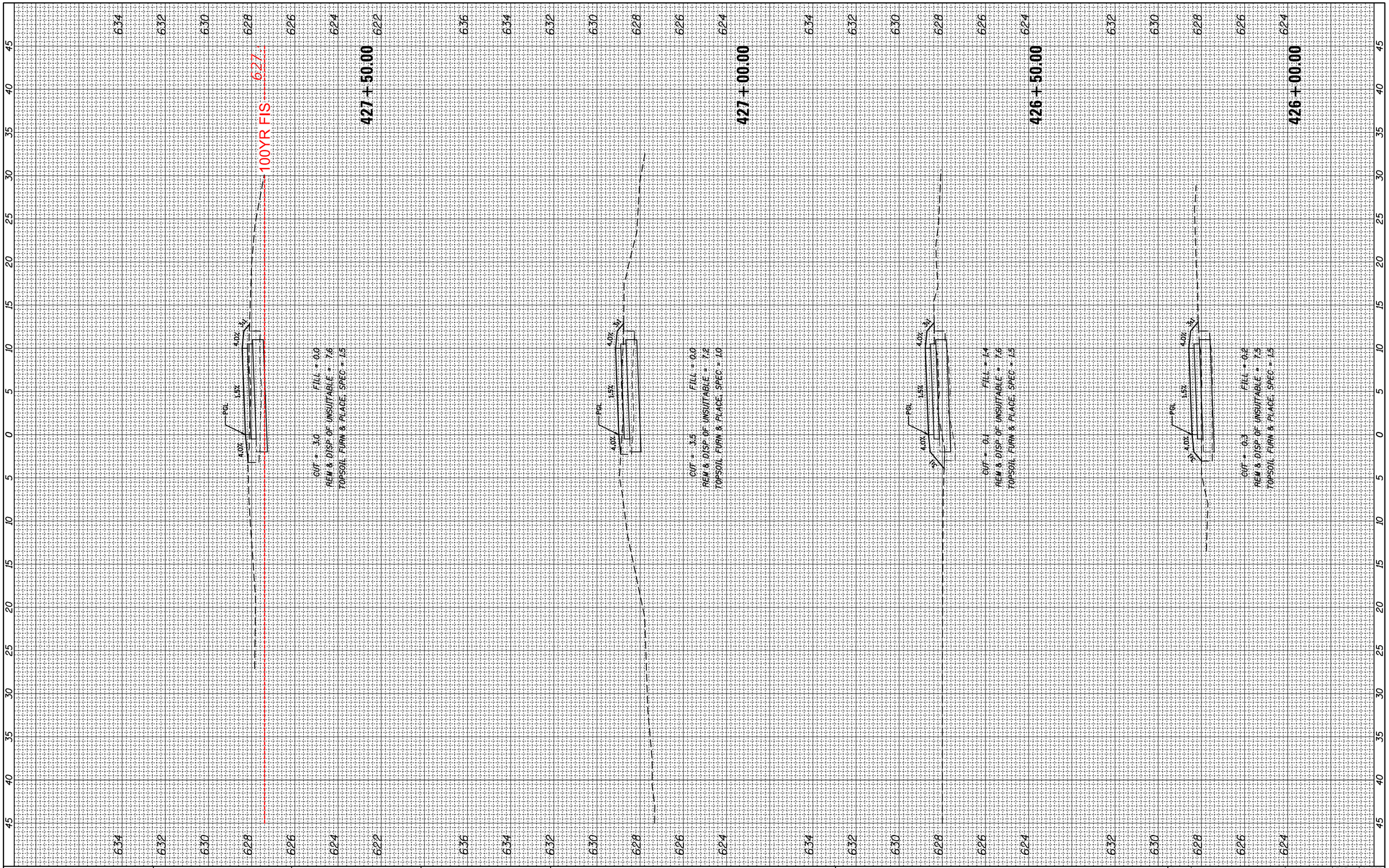

FINAL SURVEY		BY	DATE
NOTE BOOK	SURVEYED		
	PLOTTED		
	TEMPLATE		
	AREAS		
	AREAS CHECKED		
NO.			

ORIGINAL SURVEY		BY	DATE
NOTE BOOK	SURVEYED		
	PLOTTED		
	TEMPLATE		
	AREAS		
	AREAS CHECKED		
NO.			

FILE NAME =	USER NAME = mthomas	DESIGNED -	REVISED -
N:\SCHILLERPARK\230454\Civil\XS_DPRT4_230454.SHT		DRAWN -	REVISED -
	PLOT SCALE = 10'	CHECKED -	REVISED -
Default	PLOT DATE = 9/18/2024	DATE -	REVISED -

STATE OF ILLINOIS
DEPARTMENT OF TRANSPORTATION

DES PLAINES RIVER TRAIL SEGMENT 4
CROSS SECTIONS
DES PLAINES RIVER TRAIL

SCALE: | SHEET OF SHEETS | STA. 426+00.00 TO STA. 427+50.00

F.A. RTE.	SECTION	COUNTY	TOTAL SHEETS	SHEET NO.
N/A	17-00034-05-BT	COOK	86	71

CONTRACT NO. 61K54

ILLINOIS FED. AID PROJECT

FINAL SURVEY		BY	DATE
NOTE BOOK	SURVEYED		
	PLOTTED		
	TEMPLATE		
	AREAS		
	AREAS CHECKED		
NO.			

ORIGINAL SURVEY		BY	DATE
NOTE BOOK	SURVEYED		
	PLOTTED		
	TEMPLATE		
	AREAS		
	AREAS CHECKED		
NO.			

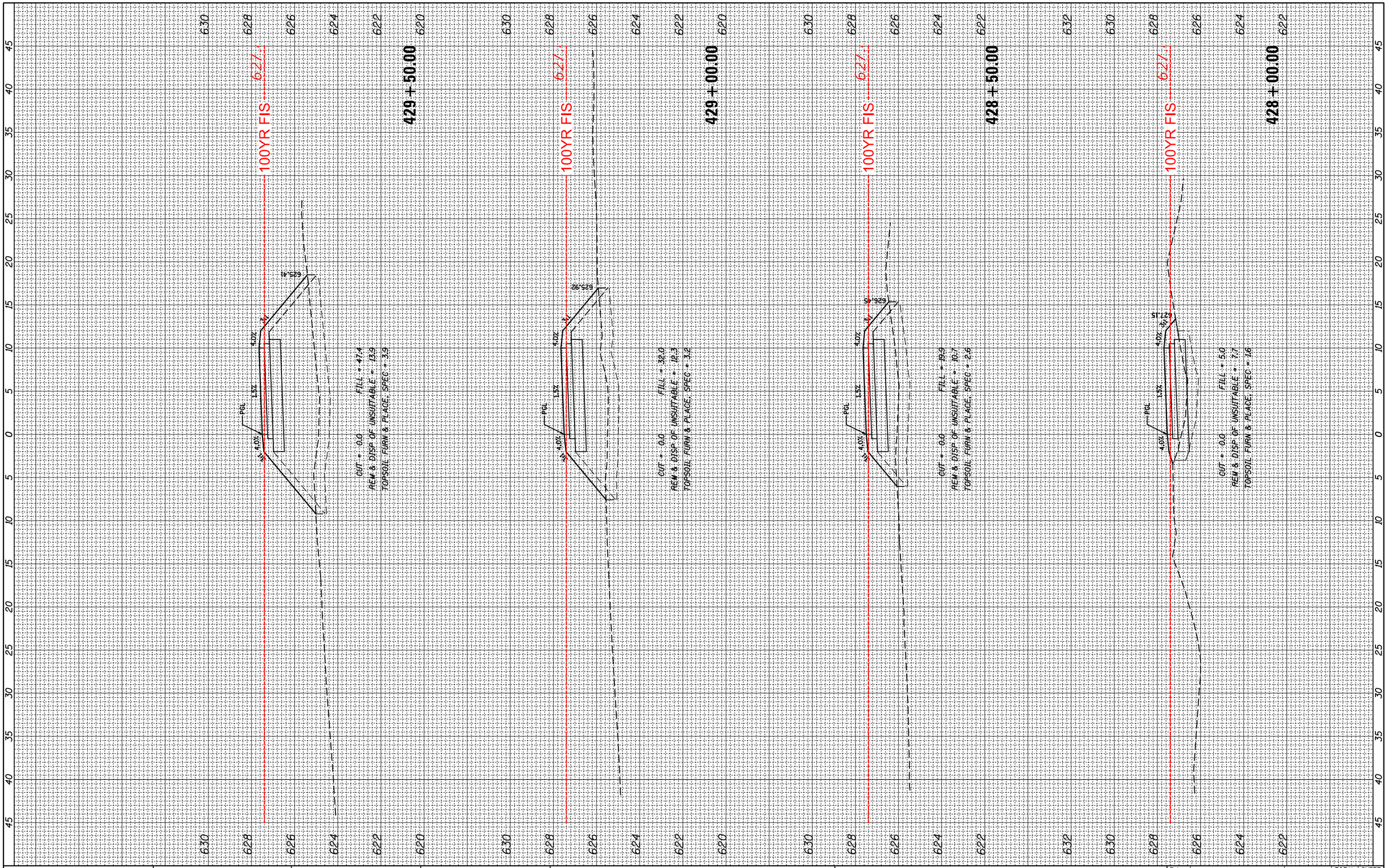

FILE NAME = N:\SCHILLERPARK\230454\Civil\XS_DPRT4_230454.SHT	USER NAME = mthomas	DESIGNED -	REVISED -
		DRAWN -	REVISED -
	PLOT SCALE = 10'	CHECKED -	REVISED -
Default	PLOT DATE = 9/18/2024	DATE -	REVISED -

STATE OF ILLINOIS
DEPARTMENT OF TRANSPORTATION

DES PLAINES RIVER TRAIL SEGMENT 4
CROSS SECTIONS
DES PLAINES RIVER TRAIL

SCALE: | SHEET OF SHEETS | STA. 428+00.00 TO STA. 429+50.00

F.A. RTE.	SECTION	COUNTY	TOTAL SHEETS	SHEET NO.
N/A	17-00034-05-BT	COOK	86	72
		CONTRACT NO. 61K54		
		ILLINOIS FED. AID PROJECT		

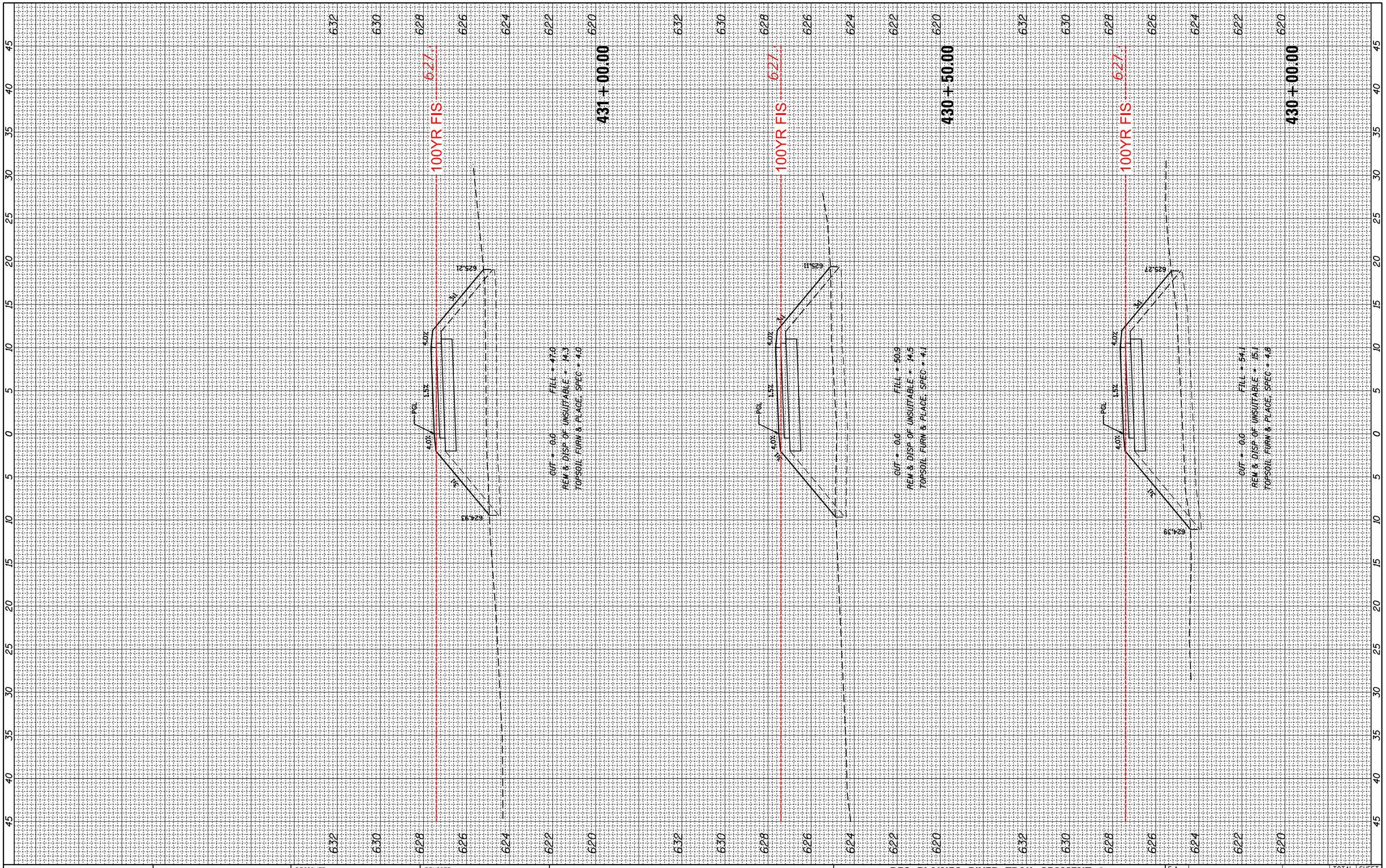

FINAL SURVEY		BY	DATE
	SURVEYED		
	PLOTTED		
NOTE BOOK	TEMPLATE		
	AREAS		
	AREAS CHECKED		
NO.			

ORIGINAL SURVEY		BY	DATE
	SURVEYED		
	PLOTTED		
NOTE BOOK	TEMPLATE		
	AREAS		
	AREAS CHECKED		
NO.			

FILE NAME = N:\SCHILLERPARK\230454\Civil\XS_DPRT4_230454.SHT	USER NAME = mthomas	DESIGNED -	REVISED -
		DRAWN -	REVISED -
	PLOT SCALE = 10'	CHECKED -	REVISED -
Default	PLOT DATE = 9/18/2024	DATE -	REVISED -

STATE OF ILLINOIS
DEPARTMENT OF TRANSPORTATION

DES PLAINES RIVER TRAIL SEGMENT 4
CROSS SECTIONS
DES PLAINES RIVER TRAIL

SCALE: | SHEET OF SHEETS | STA. 430+00.00 TO STA. 431+00.00

F.A. RTE.	SECTION	COUNTY	TOTAL SHEETS	SHEET NO.
N/A	17-00034-05-BT	COOK	86	73
		CONTRACT NO. 61K54		
	ILLINOIS	FED. AID PROJECT		

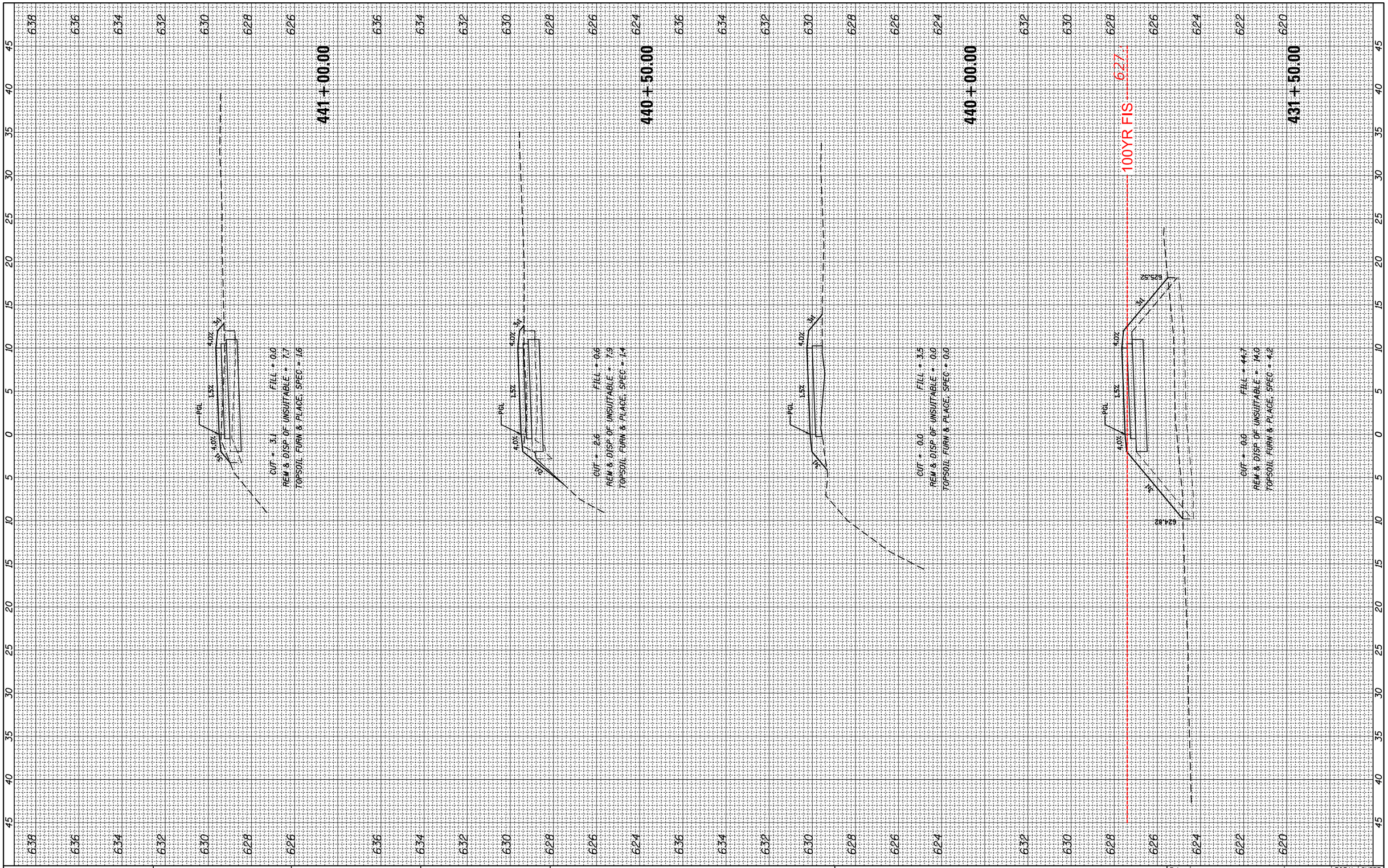

FINAL SURVEY		BY	DATE
	SURVEYED		
	PLOTTED		
NOTE BOOK	TEMPLATE		
	AREAS		
	AREAS CHECKED		
NO.			

ORIGINAL SURVEY		BY	DATE
	SURVEYED		
	PLOTTED		
NOTE BOOK	TEMPLATE		
	AREAS		
	AREAS CHECKED		
NO.			

FILE NAME =	USER NAME = mthomas	DESIGNED -	REVISED -
N:\SCHILLERPARK\230454\Civil\XS_DPRT4_230454.SHT		DRAWN -	REVISED -
	PLOT SCALE = 10'	CHECKED -	REVISED -
Default	PLOT DATE = 9/18/2024	DATE -	REVISED -

STATE OF ILLINOIS
DEPARTMENT OF TRANSPORTATION

DES PLAINES RIVER TRAIL SEGMENT 4
CROSS SECTIONS
DES PLAINES RIVER TRAIL

SCALE: | SHEET OF SHEETS | STA. 431+50.00 TO STA. 441+00.00

F.A. RTE.	SECTION	COUNTY	TOTAL SHEETS	SHEET NO.
N/A	17-00034-05-BT	COOK	86	74
		CONTRACT NO. 61K54		
		ILLINOIS FED. AID PROJECT		

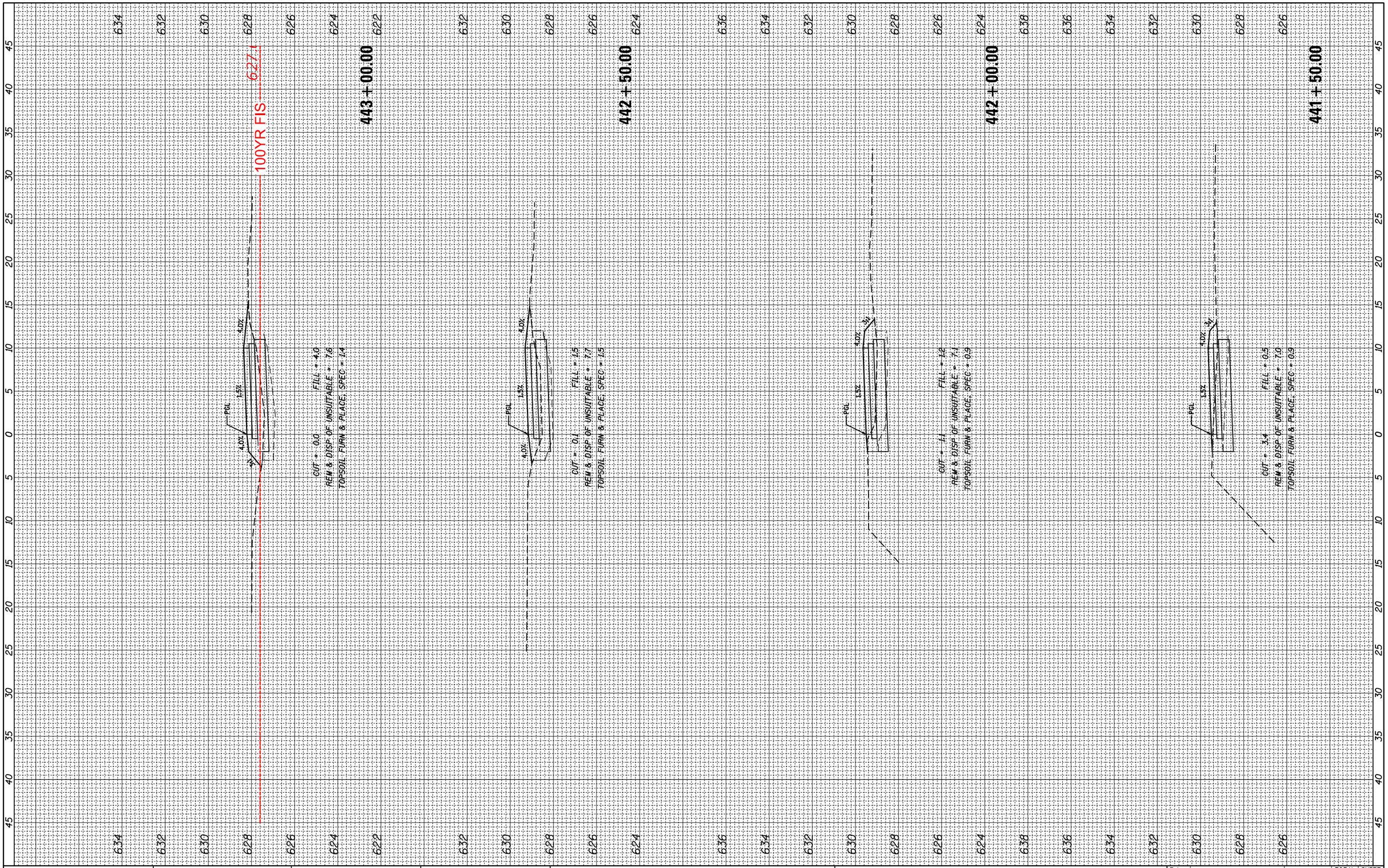

FINAL SURVEY		BY	DATE
NOTE BOOK	SURVEYED		
	PLOTTED		
	TEMPLATE		
	AREAS		
	AREAS CHECKED		
NO.			

ORIGINAL SURVEY		BY	DATE
NOTE BOOK	SURVEYED		
	PLOTTED		
	TEMPLATE		
	AREAS		
	AREAS CHECKED		
NO.			

FILE NAME = N:\SCHILLERPARK\230454\Civil\XS_DPRT4_230454.SHT	USER NAME = mthomas	DESIGNED -	REVISED -
		DRAWN -	REVISED -
	PLOT SCALE = 10'	CHECKED -	REVISED -
Default	PLOT DATE = 9/18/2024	DATE -	REVISED -

STATE OF ILLINOIS
DEPARTMENT OF TRANSPORTATION

DES PLAINES RIVER TRAIL SEGMENT 4
CROSS SECTIONS
DES PLAINES RIVER TRAIL

SCALE: | SHEET OF SHEETS | STA. 441+50.00 TO STA. 443+00.00

F.A. RTE.	SECTION	COUNTY	TOTAL SHEETS	SHEET NO.
N/A	17-00034-05-BT	COOK	86	75

CONTRACT NO. 61K54

ILLINOIS FED. AID PROJECT

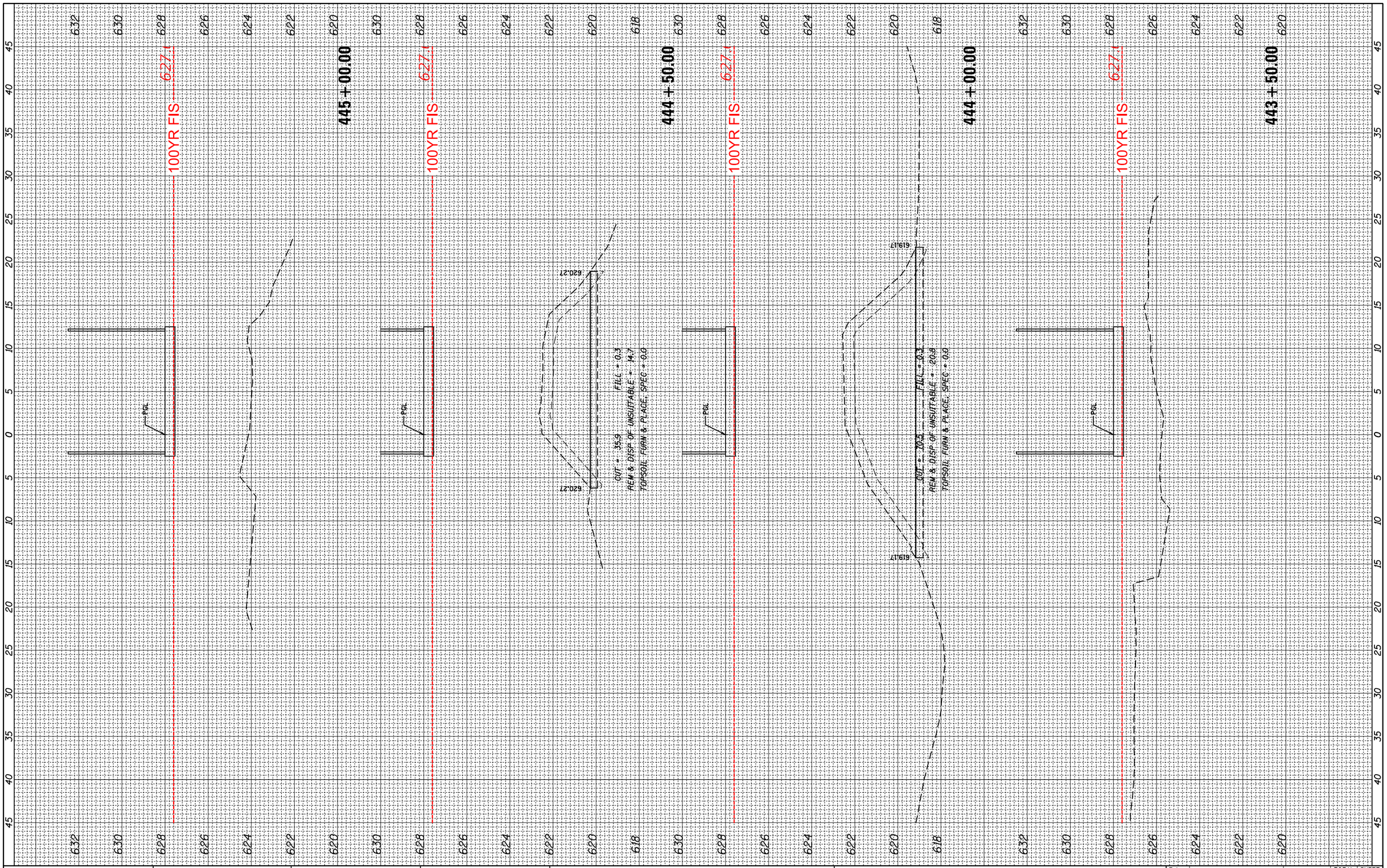

FINAL SURVEY	BY	DATE
SURVEYED		
PLOTTED		
TEMPLATE		
AREAS		
AREAS CHECKED		

NOTE BOOK
NO.

ORIGINAL SURVEY	BY	DATE
SURVEYED		
PLOTTED		
TEMPLATE		
AREAS		
AREAS CHECKED		

NOTE BOOK
NO.

FILE NAME =
N:\SCHILLERPARK\230454\Civil\XS_DPRT4_230454.SMT
Default

USER NAME = mthomas
PLOT SCALE = 10'
PLOT DATE = 9/18/2024

DESIGNED -
DRAWN -
CHECKED -
DATE -

REVISED -
REVISED -
REVISED -
REVISED -

STATE OF ILLINOIS
DEPARTMENT OF TRANSPORTATION

DES PLAINES RIVER TRAIL SEGMENT 4
CROSS SECTIONS
DES PLAINES RIVER TRAIL

SCALE: | SHEET OF SHEETS | STA. 443+50.00 TO STA. 445+00.00

F.A. RTE.	SECTION	COUNTY	TOTAL SHEETS	SHEET NO.
N/A	17-00034-05-BT	COOK	86	76

CONTRACT NO. 61K54

ILLINOIS FED. AID PROJECT

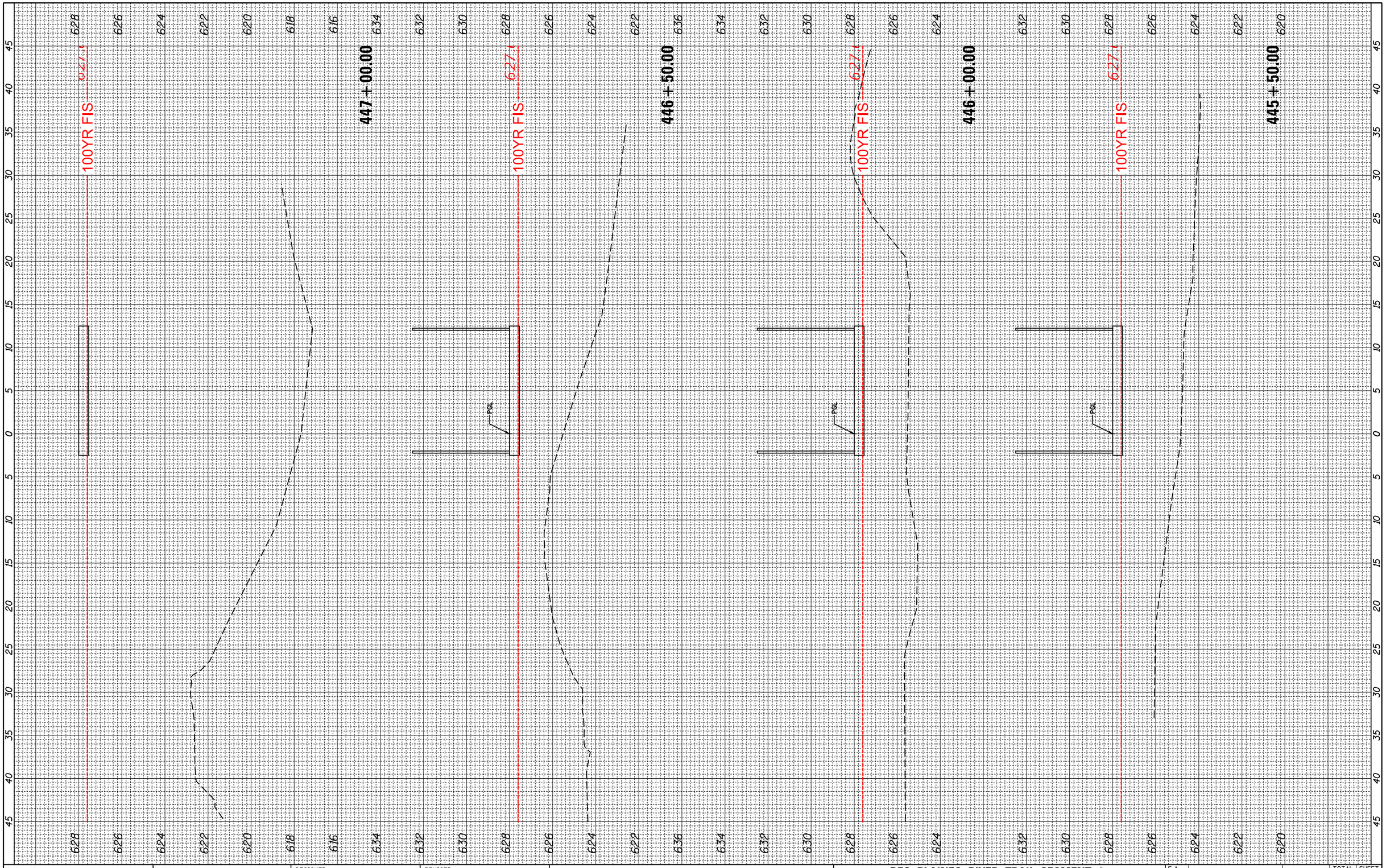

FINAL SURVEY		BY	DATE
	SURVEYED		
	PLOTTED		
NOTE BOOK	TEMPLATE		
	AREAS		
	AREAS CHECKED		
NO.			

ORIGINAL SURVEY		BY	DATE
	SURVEYED		
	PLOTTED		
NOTE BOOK	TEMPLATE		
	AREAS		
	AREAS CHECKED		
NO.			

FILE NAME = N:\SCHILLERPARK\230454\Civil\XS_DPRT4_230454.SHT	USER NAME = mthomas	DESIGNED -	REVISED -
		DRAWN -	REVISED -
	PLOT SCALE = 10'	CHECKED -	REVISED -
Default	PLOT DATE = 9/18/2024	DATE -	REVISED -

STATE OF ILLINOIS
DEPARTMENT OF TRANSPORTATION

DES PLAINES RIVER TRAIL SEGMENT 4
CROSS SECTIONS
DES PLAINES RIVER TRAIL

SCALE: | SHEET OF SHEETS | STA. 445+50.00 TO STA. 447+00.00

F.A. RTE.	SECTION	COUNTY	TOTAL SHEETS	SHEET NO.
N/A	17-00034-05-BT	COOK	86	77

CONTRACT NO. 61K54

ILLINOIS FED. AID PROJECT

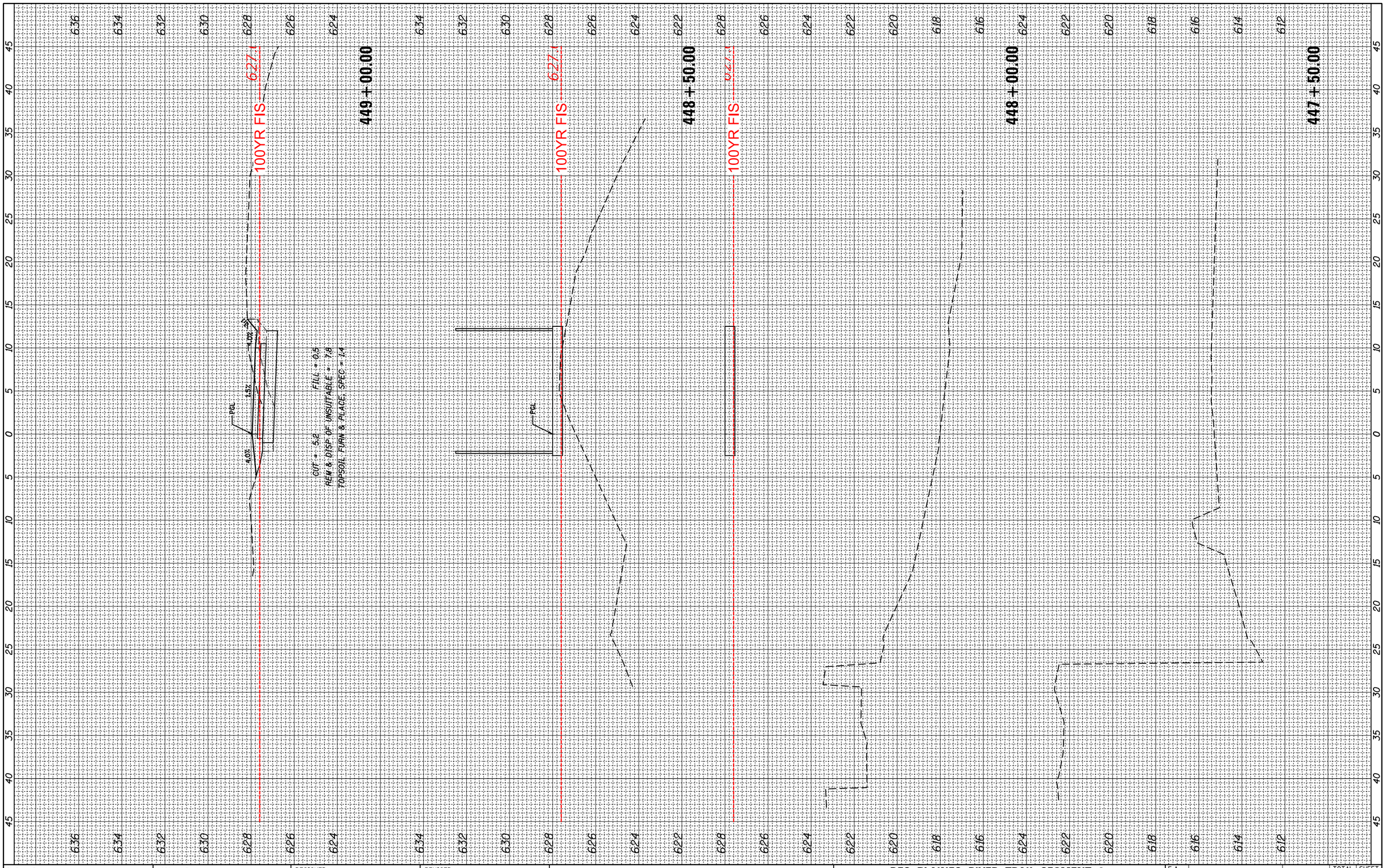

FINAL SURVEY		BY	DATE
	SURVEYED		
	PLOTTED		
NOTE BOOK	TEMPLATE		
	AREAS		
NO.	AREAS CHECKED		

ORIGINAL SURVEY		BY	DATE
	SURVEYED		
	PLOTTED		
NOTE BOOK	TEMPLATE		
	AREAS		
NO.	AREAS CHECKED		

FILE NAME = N:\SCHILLERPARK\230454\Civil\XS_DPRT4_230454.SHT	USER NAME = mthomas	DESIGNED -	REVISED -
		DRAWN -	REVISED -
	PLOT SCALE = 10'	CHECKED -	REVISED -
Default	PLOT DATE = 9/18/2024	DATE -	REVISED -

STATE OF ILLINOIS
DEPARTMENT OF TRANSPORTATION

DES PLAINES RIVER TRAIL SEGMENT 4
CROSS SECTIONS
DES PLAINES RIVER TRAIL

SCALE: | SHEET OF SHEETS | STA. 447+50.00 TO STA. 449+00.00

F.A. RTE.	SECTION	COUNTY	TOTAL SHEETS	SHEET NO.
N/A	17-00034-05-BT	COOK	86	78
		CONTRACT NO. 61K54		
		ILLINOIS FED. AID PROJECT		

FINAL SURVEY		BY	DATE
NOTE BOOK	SURVEYED		
	PLOTTED		
	TEMPLATE		
	AREAS		
	AREAS CHECKED		
NO.			

ORIGINAL SURVEY		BY	DATE
NOTE BOOK	SURVEYED		
	PLOTTED		
	TEMPLATE		
	AREAS		
	AREAS CHECKED		
NO.			

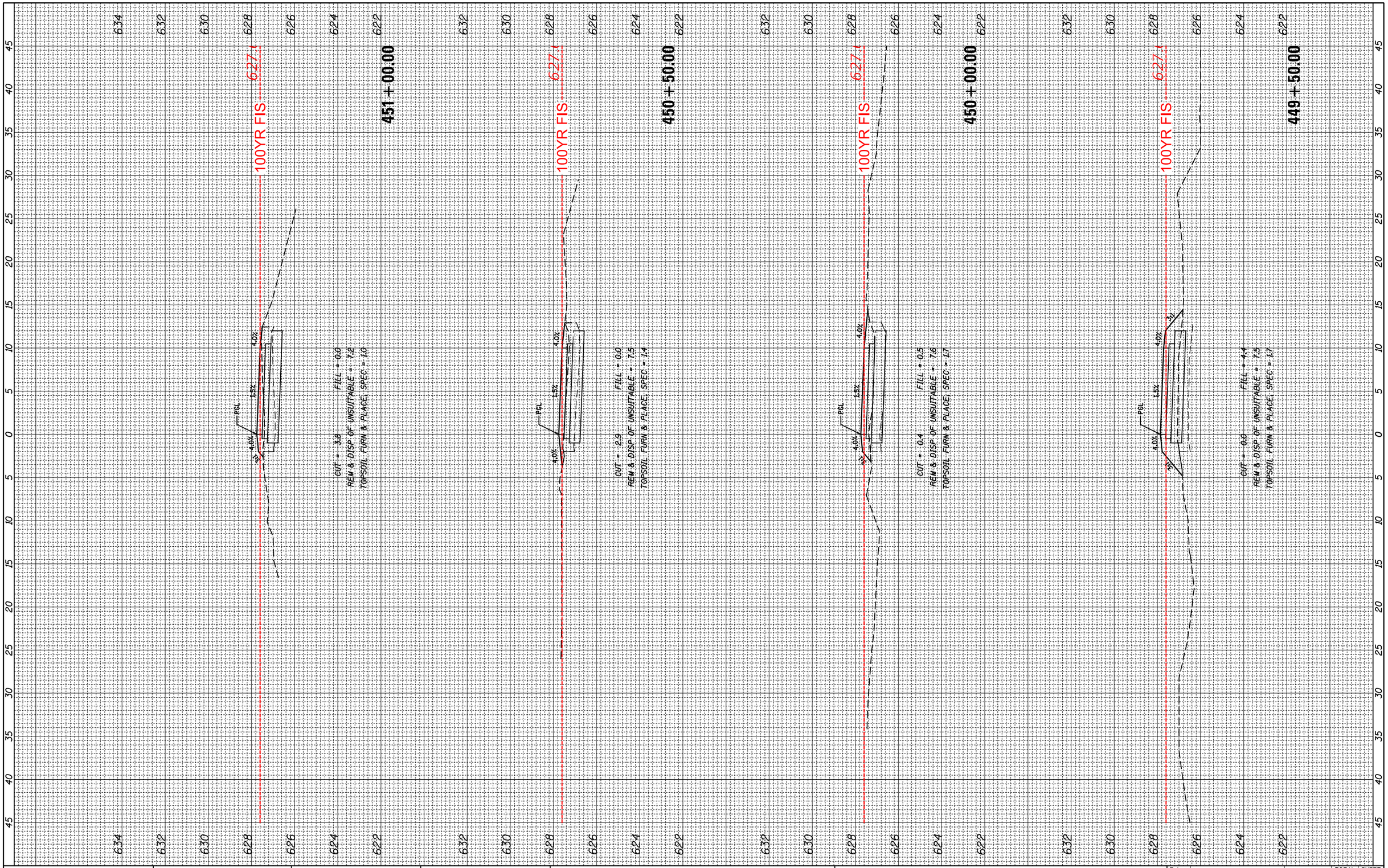

FILE NAME = N:\SCHILLERPARK\230454\Civil\XS_DPRT4_230454.SHT	USER NAME = mthomas	DESIGNED -	REVISED -
		DRAWN -	REVISED -
	PLOT SCALE = 10'	CHECKED -	REVISED -
Default	PLOT DATE = 9/18/2024	DATE -	REVISED -

STATE OF ILLINOIS
DEPARTMENT OF TRANSPORTATION

DES PLAINES RIVER TRAIL SEGMENT 4
CROSS SECTIONS
DES PLAINES RIVER TRAIL

SCALE: | SHEET OF SHEETS | STA. 449+50.00 TO STA. 451+00.00

F.A. RTE.	SECTION	COUNTY	TOTAL SHEETS	SHEET NO.
N/A	17-00034-05-BT	COOK	86	79
		CONTRACT NO. 61K54		
		ILLINOIS FED. AID PROJECT		

FINAL SURVEY		BY	DATE
NOTE BOOK	SURVEYED		
	PLOTTED		
	TEMPLATE		
	AREAS		
	AREAS CHECKED		
NO.			

ORIGINAL SURVEY		BY	DATE
NOTE BOOK	SURVEYED		
	PLOTTED		
	TEMPLATE		
	AREAS		
	AREAS CHECKED		
NO.			

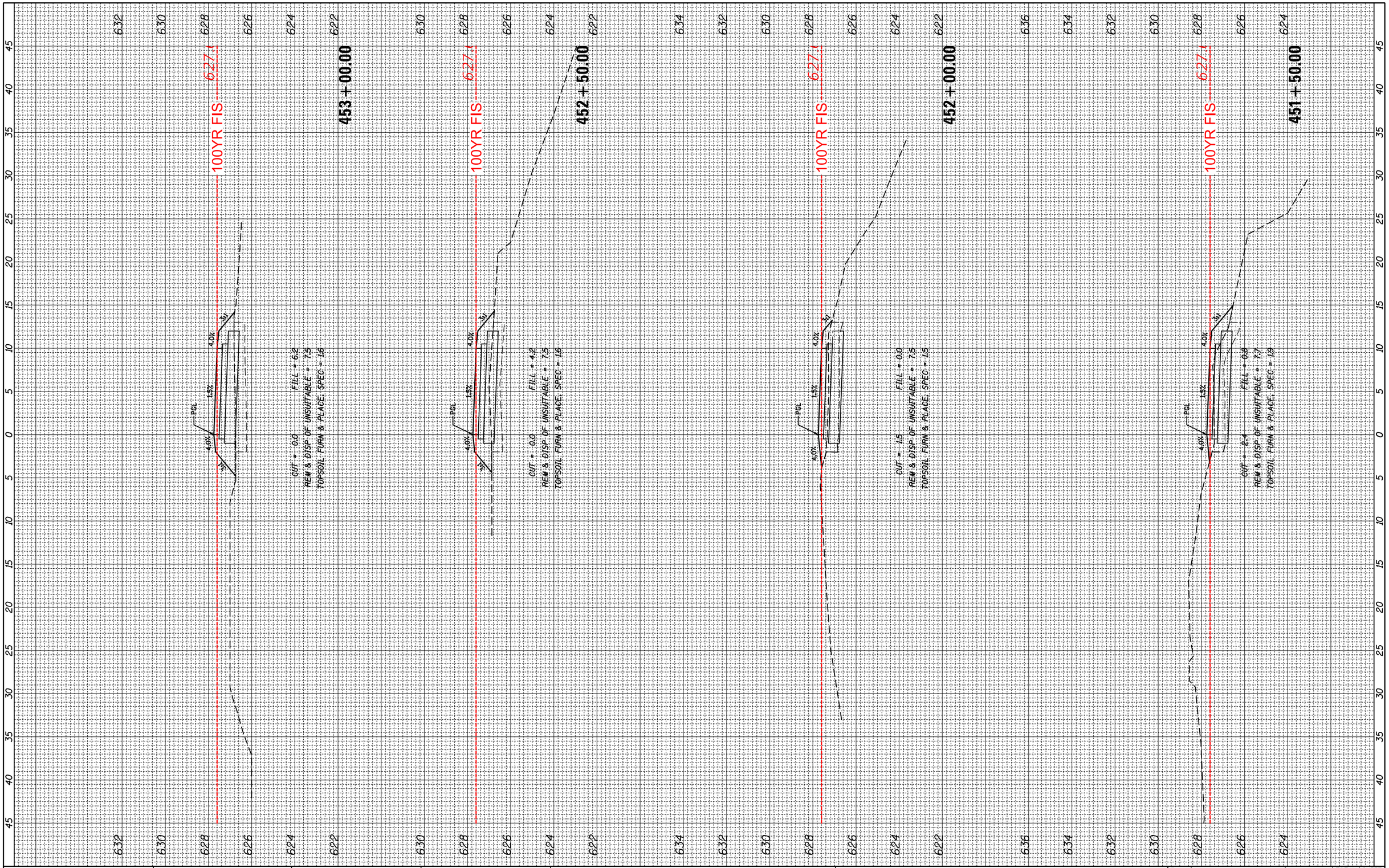

FILE NAME = N:\SCHILLERPARK\230454\Civil\XS_DPRT4_230454.SHT	USER NAME = mthomas	DESIGNED -	REVISED -
		DRAWN -	REVISED -
	PLOT SCALE = 10'	CHECKED -	REVISED -
Default	PLOT DATE = 9/18/2024	DATE -	REVISED -

STATE OF ILLINOIS
DEPARTMENT OF TRANSPORTATION

DES PLAINES RIVER TRAIL SEGMENT 4
CROSS SECTIONS
DES PLAINES RIVER TRAIL

SCALE: | SHEET OF SHEETS | STA. 451+50.00 TO STA. 453+00.00

F.A. RTE.	SECTION	COUNTY	TOTAL SHEETS	SHEET NO.
N/A	17-00034-05-BT	COOK	86	80

CONTRACT NO. 61K54

ILLINOIS FED. AID PROJECT

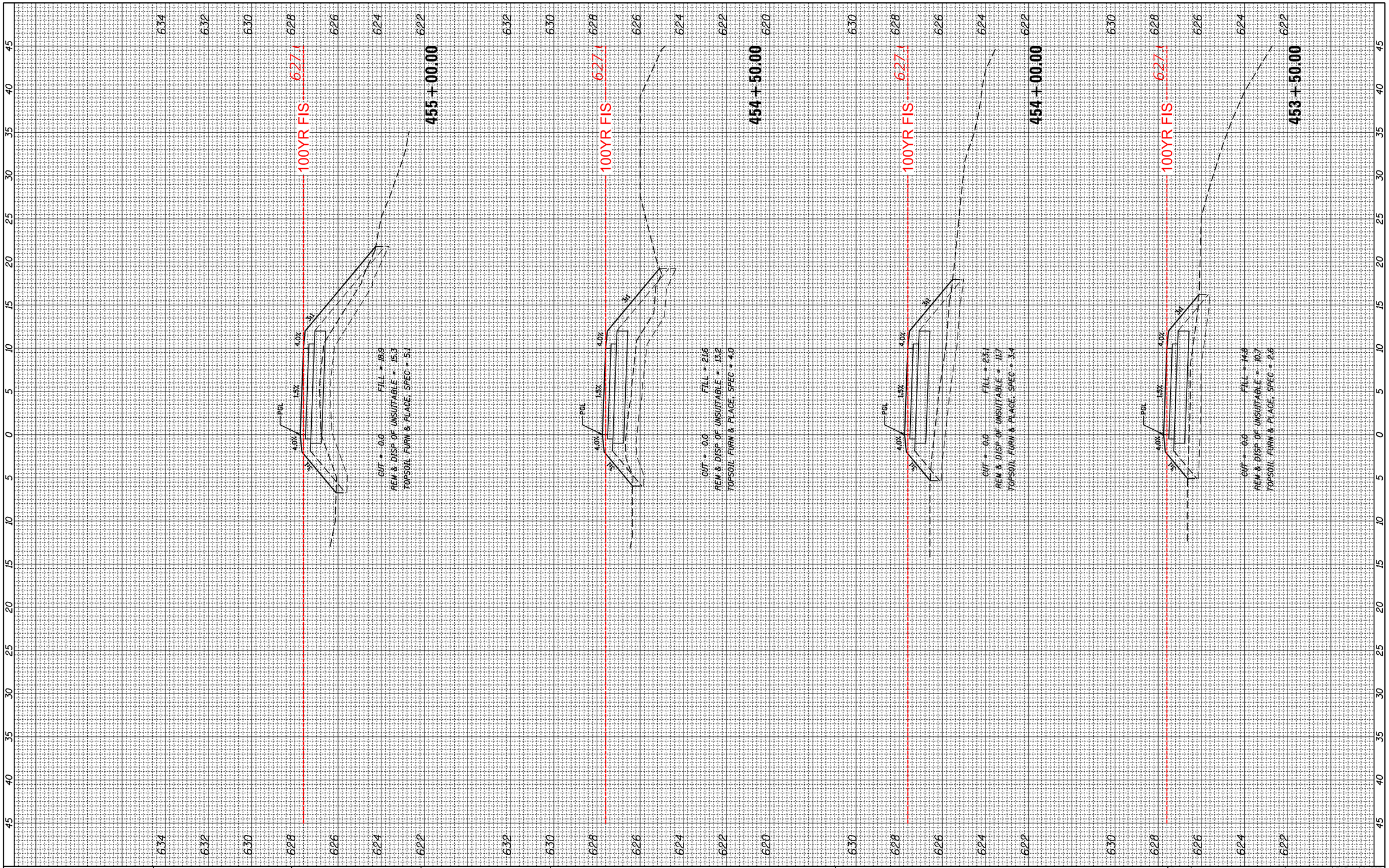

FINAL SURVEY		BY	DATE
NOTE BOOK	SURVEYED		
	PLOTTED		
	TEMPLATE		
	AREAS		
	AREAS CHECKED		
NO.			

ORIGINAL SURVEY		BY	DATE
NOTE BOOK	SURVEYED		
	PLOTTED		
	TEMPLATE		
	AREAS		
	AREAS CHECKED		
NO.			

FILE NAME = N:\SCHILLERPARK\230454\Civil\XS_DPRT4_230454.SHT	USER NAME = mthomas	DESIGNED -	REVISED -
		DRAWN -	REVISED -
	PLOT SCALE = 10'	CHECKED -	REVISED -
Default	PLOT DATE = 9/18/2024	DATE -	REVISED -

STATE OF ILLINOIS
DEPARTMENT OF TRANSPORTATION

DES PLAINES RIVER TRAIL SEGMENT 4
CROSS SECTIONS
DES PLAINES RIVER TRAIL

SCALE: | SHEET OF SHEETS | STA. 453+50.00 TO STA. 455+00.00

F.A. RTE.	SECTION	COUNTY	TOTAL SHEETS	SHEET NO.
N/A	17-00034-05-BT	COOK	86	81

CONTRACT NO. 61K54

ILLINOIS FED. AID PROJECT

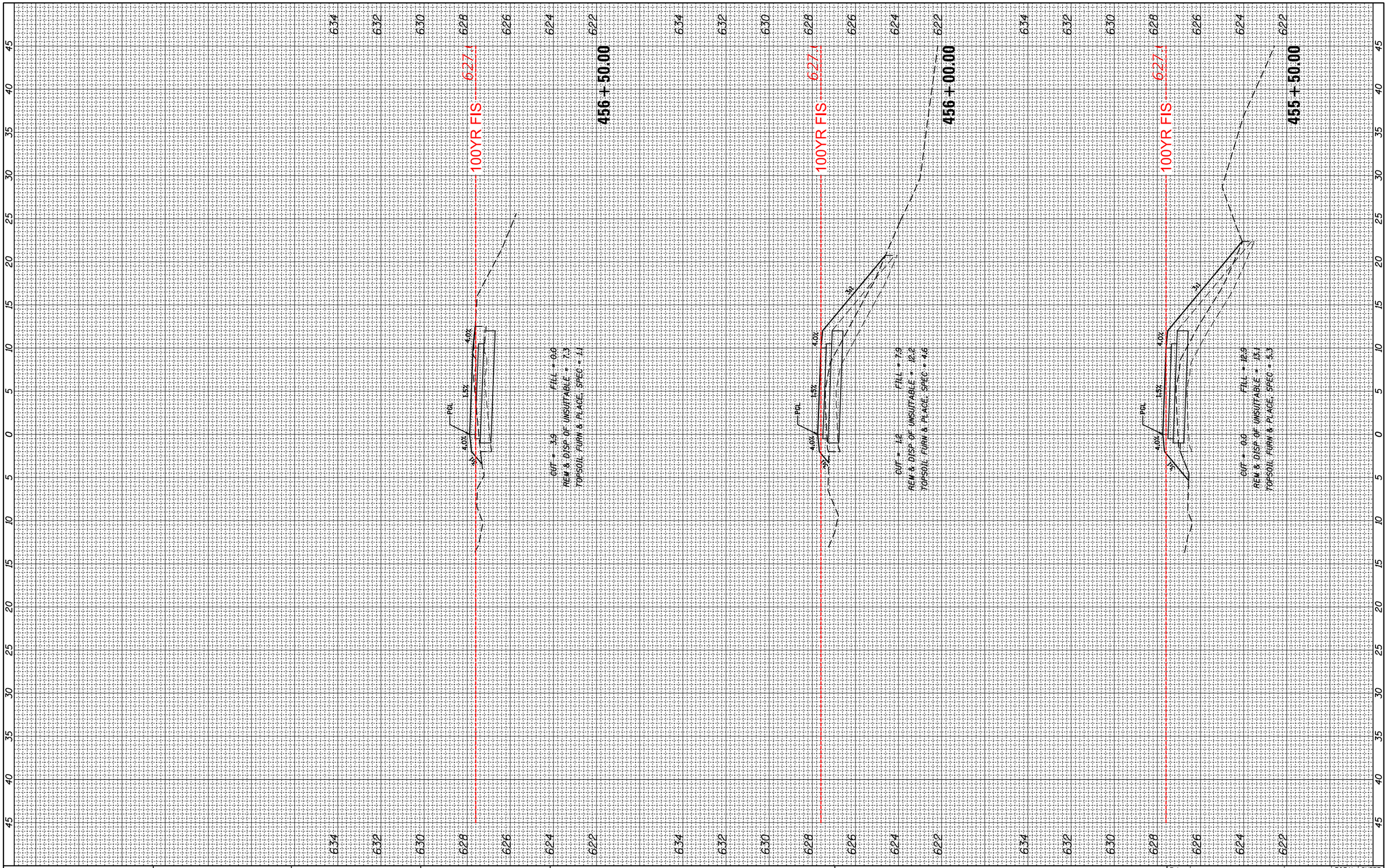

FINAL SURVEY		BY	DATE
NOTE BOOK	SURVEYED		
	PLOTTED		
	TEMPLATE		
	AREAS		
	AREAS CHECKED		
NO.			

ORIGINAL SURVEY		BY	DATE
NOTE BOOK	SURVEYED		
	PLOTTED		
	TEMPLATE		
	AREAS		
	AREAS CHECKED		
NO.			

FILE NAME = N:\SCHILLERPARK\230454\Civil\XS_DPRT4_230454.SHT	USER NAME = mthomas	DESIGNED -	REVISED -
		DRAWN -	REVISED -
	PLOT SCALE = 10'	CHECKED -	REVISED -
Default	PLOT DATE = 9/18/2024	DATE -	REVISED -

STATE OF ILLINOIS
DEPARTMENT OF TRANSPORTATION

DES PLAINES RIVER TRAIL SEGMENT 4
CROSS SECTIONS
DES PLAINES RIVER TRAIL

SCALE: | SHEET OF SHEETS | STA. 455+50.00 TO STA. 456+50.00

F.A. RTE.	SECTION	COUNTY	TOTAL SHEETS	SHEET NO.
N/A	17-00034-05-BT	COOK	86	82

CONTRACT NO. 61K54

ILLINOIS FED. AID PROJECT

FINAL SURVEY		BY	DATE
	SURVEYED		
	PLOTTED		
NOTE BOOK	TEMPLATE		
	AREAS		
	AREAS CHECKED		
NO.			

ORIGINAL SURVEY		BY	DATE
	SURVEYED		
	PLOTTED		
NOTE BOOK	TEMPLATE		
	AREAS		
	AREAS CHECKED		
NO.			

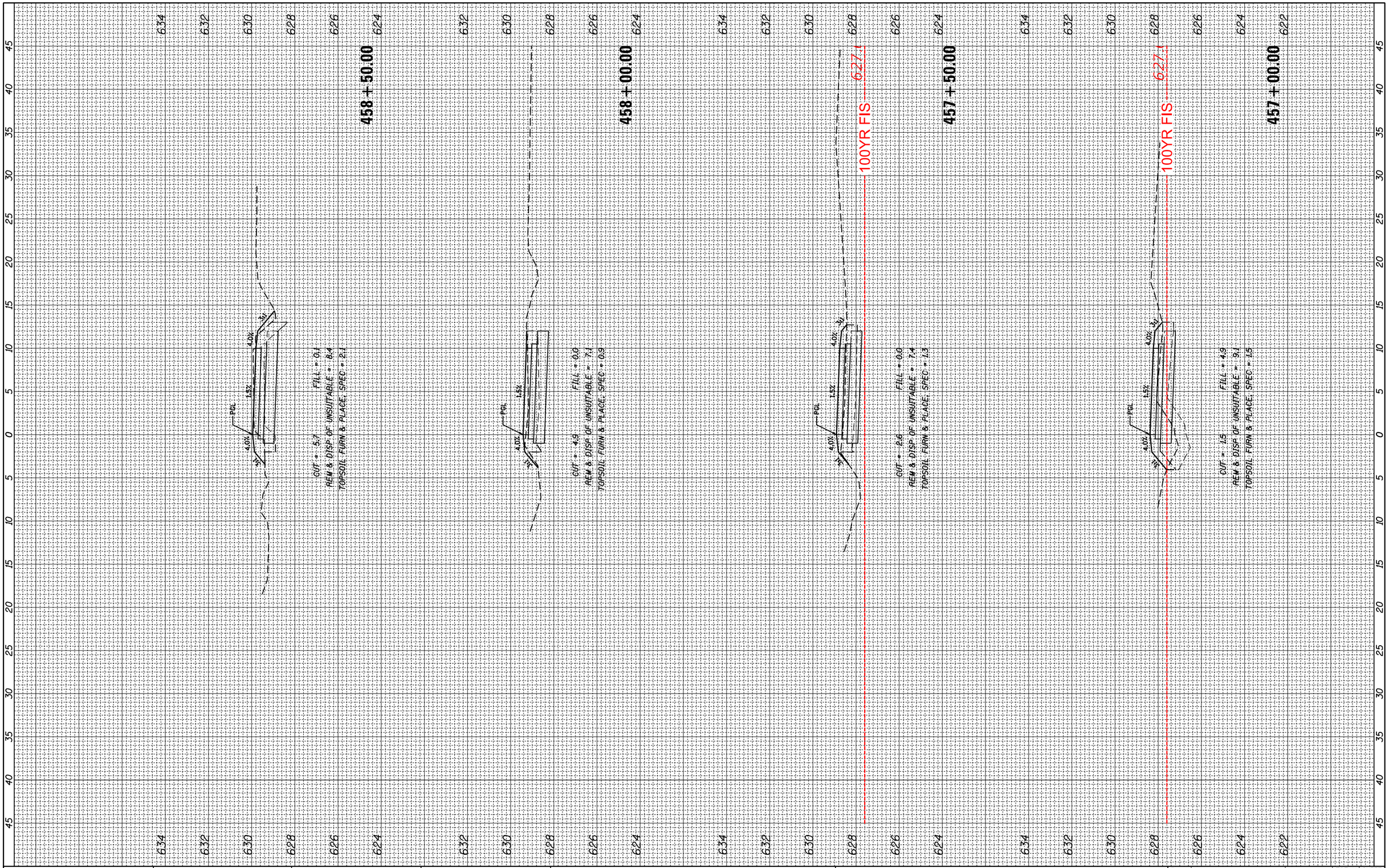

FILE NAME = N:\SCHILLERPARK\230454\Civil\XS_DPRT4_230454.SHT	USER NAME = mthomas	DESIGNED -	REVISED -
		DRAWN -	REVISED -
	PLOT SCALE = 10'	CHECKED -	REVISED -
Default	PLOT DATE = 9/18/2024	DATE -	REVISED -

STATE OF ILLINOIS
DEPARTMENT OF TRANSPORTATION

DES PLAINES RIVER TRAIL SEGMENT 4
CROSS SECTIONS
DES PLAINES RIVER TRAIL

SCALE: | SHEET OF SHEETS | STA. 457+00.00 TO STA. 458+50.00

F.A. RTE.	SECTION	COUNTY	TOTAL SHEETS	SHEET NO.
N/A	17-00034-05-BT	COOK	86	83
		CONTRACT NO. 61K54		
		ILLINOIS FED. AID PROJECT		

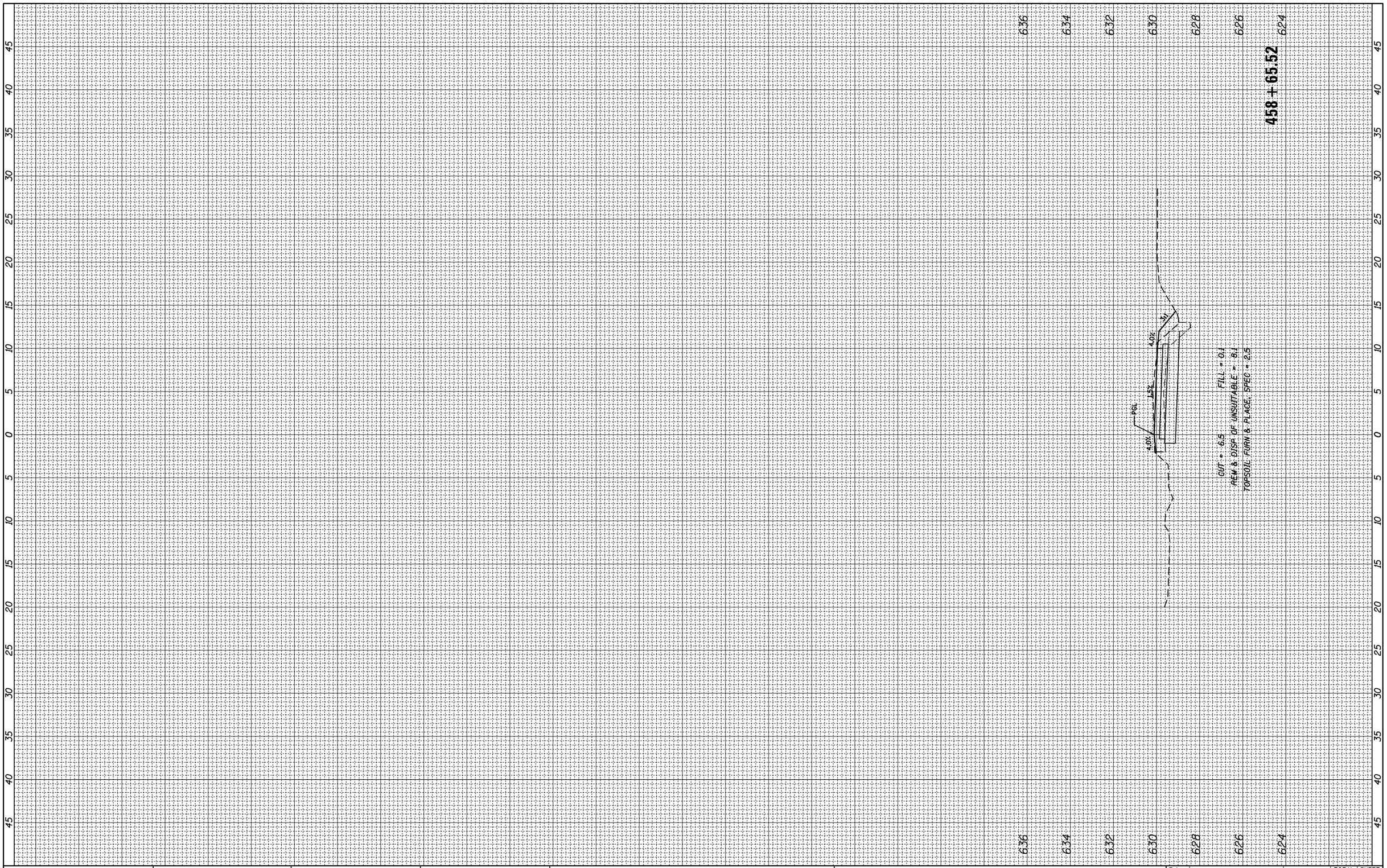

FINAL SURVEY		BY	DATE
NOTE BOOK NO.	SURVEYED		
	PLOTTED		
	TEMPLATE		
	AREAS		
	AREAS CHECKED		

ORIGINAL SURVEY		BY	DATE
NOTE BOOK NO.	SURVEYED		
	PLOTTED		
	TEMPLATE		
	AREAS		
	AREAS CHECKED		

FILE NAME = N:\SCHILLERPARK\230454\Civil\XS_DPRT4_230454.SHT	USER NAME = mthomas	DESIGNED -	REVISED -
		DRAWN -	REVISED -
	PLOT SCALE = 10'	CHECKED -	REVISED -
Default	PLOT DATE = 9/18/2024	DATE -	REVISED -

STATE OF ILLINOIS
DEPARTMENT OF TRANSPORTATION

DES PLAINES RIVER TRAIL SEGMENT 4
CROSS SECTIONS
DES PLAINES RIVER TRAIL

SCALE: | SHEET OF SHEETS | STA. 458+65.52 TO STA. 458+65.52

F.A. RTE.	SECTION	COUNTY	TOTAL SHEETS	SHEET NO.
N/A	17-00034-05-BT	COOK	86	84
		CONTRACT NO. 61K54		
		ILLINOIS FED. AID PROJECT		

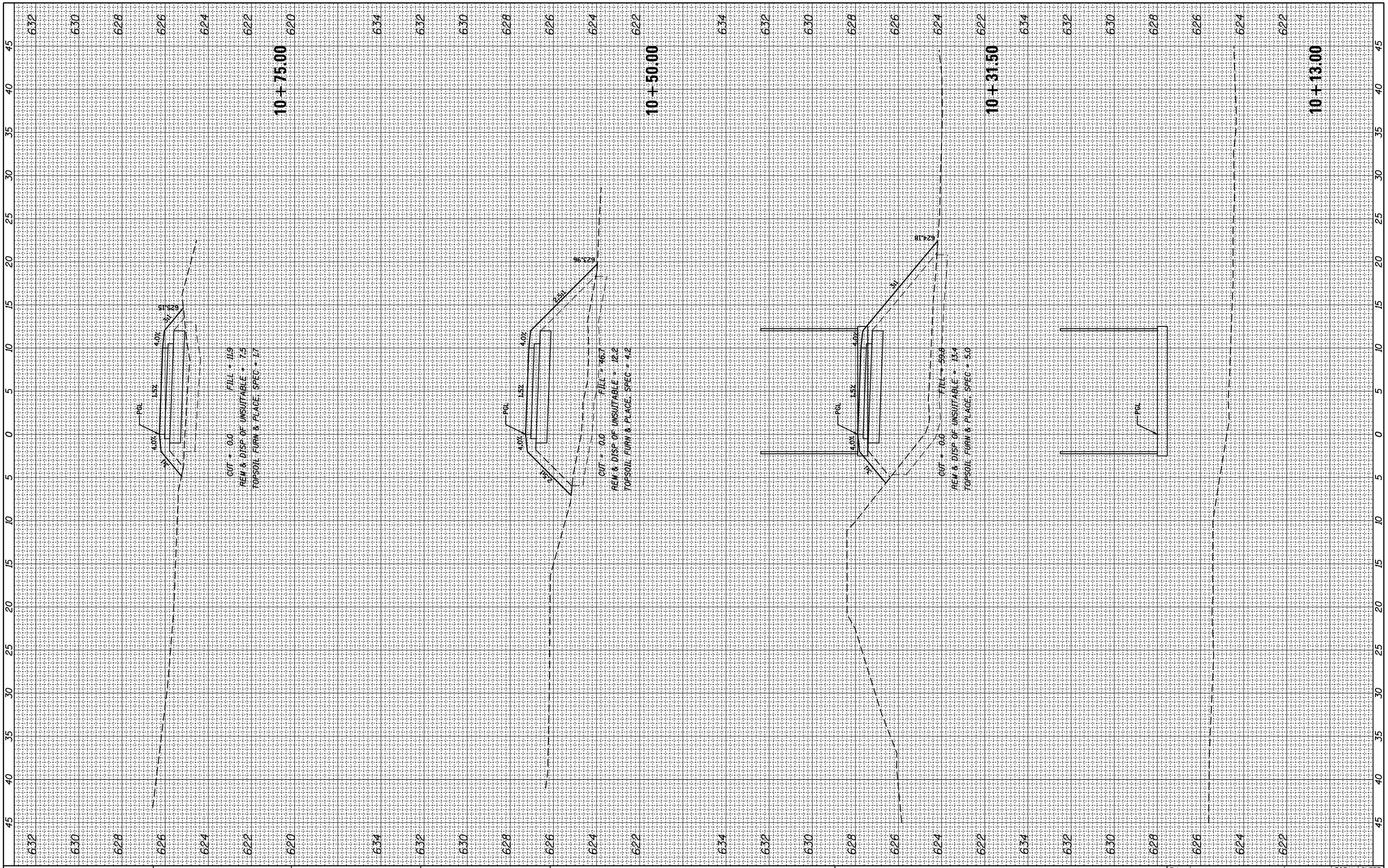

FINAL SURVEY		BY	DATE
	SURVEYED		
	PLOTTED		
NOTE BOOK	TEMPLATE		
	AREAS		
	AREAS CHECKED		
NO.			

ORIGINAL SURVEY		BY	DATE
	SURVEYED		
	PLOTTED		
NOTE BOOK	TEMPLATE		
	AREAS		
	AREAS CHECKED		
NO.			

FILE NAME = N:\SCHILLERPARK\230454\Civil\XS_SPUR_230454.SH	USER NAME = mthomas	DESIGNED -	REVISED -
		DRAWN -	REVISED -
	PLOT SCALE = 10'	CHECKED -	REVISED -
Default	PLOT DATE = 9/18/2024	DATE -	REVISED -

STATE OF ILLINOIS
DEPARTMENT OF TRANSPORTATION

DES PLAINES RIVER TRAIL SEGMENT 4
CROSS SECTIONS
SPUR TRAIL

SCALE: | SHEET OF SHEETS | STA. 10+13.00 TO STA. 10+75.00

F.A. RTE.	SECTION	COUNTY	TOTAL SHEETS	SHEET NO.
N/A	17-00034-05-BT	COOK	86	85

CONTRACT NO. 61K54

ILLINOIS FED. AID PROJECT

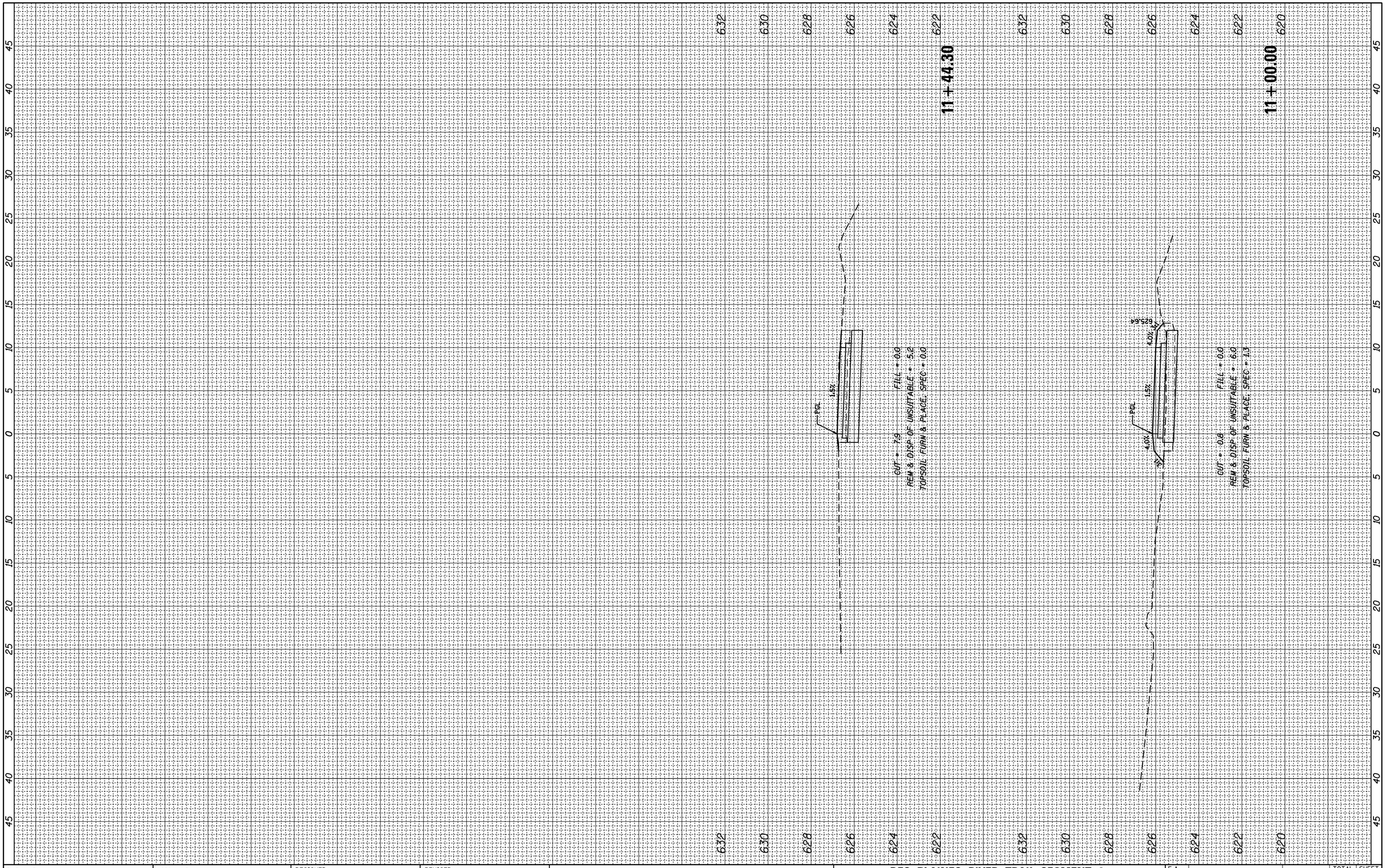

FINAL SURVEY		BY	DATE
	SURVEYED		
	PLOTTED		
NOTE BOOK	TEMPLATE		
	AREAS		
	AREAS CHECKED		
NO.			

ORIGINAL SURVEY		BY	DATE
	SURVEYED		
	PLOTTED		
NOTE BOOK	TEMPLATE		
	AREAS		
	AREAS CHECKED		
NO.			

FILE NAME = N:\SCHILLERPARK\230454\Civil\XS_SPUR_230454.SH	USER NAME = mthomas	DESIGNED -	REVISED -
		DRAWN -	REVISED -
	PLOT SCALE = 10'	CHECKED -	REVISED -
Default	PLOT DATE = 9/18/2024	DATE -	REVISED -

STATE OF ILLINOIS
DEPARTMENT OF TRANSPORTATION

DES PLAINES RIVER TRAIL SEGMENT 4
CROSS SECTIONS
SPUR TRAIL

SCALE: | SHEET OF SHEETS | STA. 11+00.00 TO STA. 11+44.30

F.A. RTE.	SECTION	COUNTY	TOTAL SHEETS	SHEET NO.
N/A	17-00034-05-BT	COOK	86	86
		CONTRACT NO. 61K54		
	ILLINOIS	FED. AID PROJECT		