11-08-2024 LETTING ITEM 081

FAI RTE.	SECTION	COUNTY	TOTAL SHEETS	SHEET NO.
70	3-4BI	BOND	31	1
	ILLINOIS	CONTRACT NO. 76T82		

NHPP-P792(909)

STATE OF ILLINOIS
DEPARTMENT OF TRANSPORTATION

D-98-056-24

PROPOSED HIGHWAY PLANS

FOR INDEX OF SHEETS, SEE SHEET NO. 2

FOR HIGHWAY STANDARDS, SEE SHEET NO. 2

FAI ROUTE 70 (I-70)
SECTION 3-4BI
PROJECT NHPP-P792(909)
BRIDGE APPROACH REPLACEMENT
BOND COUNTY

C-98-121-24

LICENSED PROFESSIONAL ENGINEER
RICHARD K. ALLENDER III
062-054436
STATE OF ILLINOIS

Expires: 11/30/2025

BRIDGE REPAIR
SN 003-0010 (WB)
BEGIN STA. 2621+81.50
END STA. 2623+76.50
LAT: 38°52'12.45"N
LONG: 89°23'17.57"W

BRIDGE REPAIR
SN 003-0009 (EB)
BEGIN STA. 2621+81.50
END STA. 2623+76.50
LAT: 38°52'11.68"N
LONG: 89°23'17.02"W

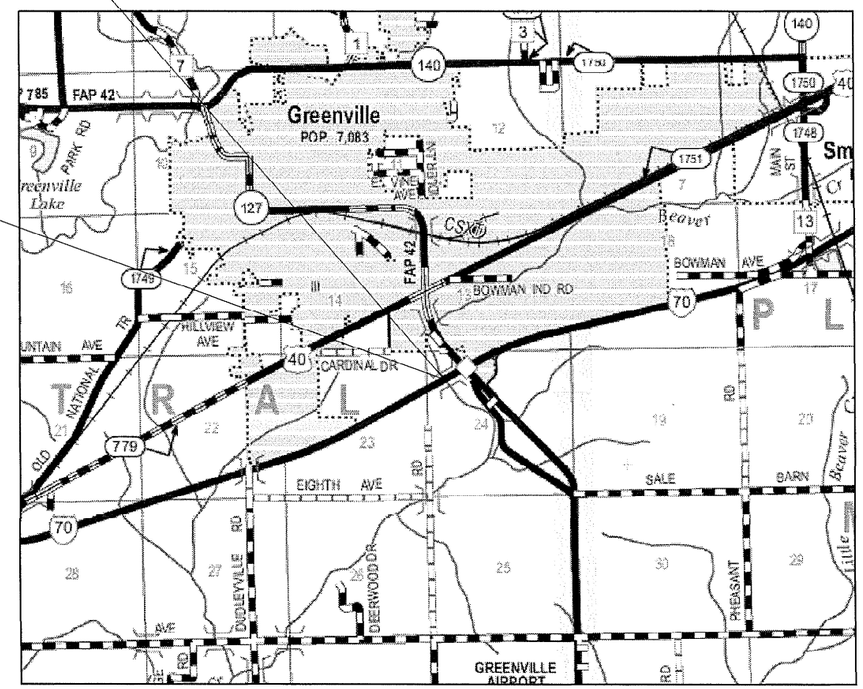

N

LOCATION MAP
NOT TO SCALE

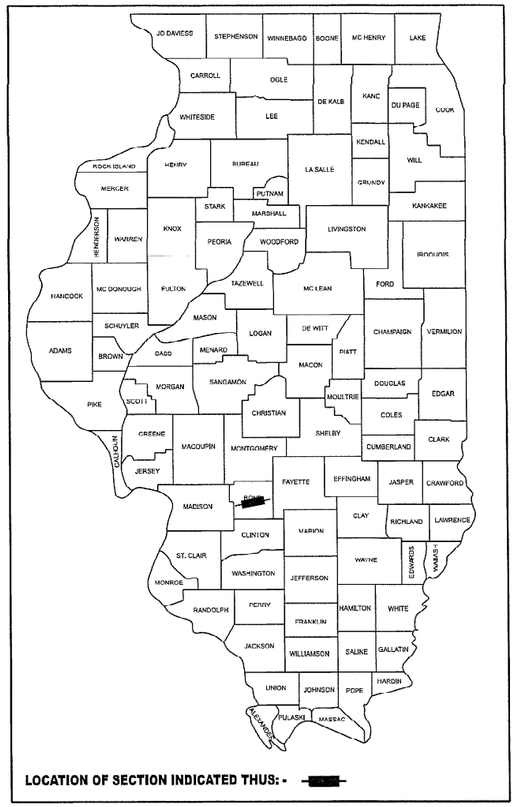

LOCATION OF SECTION INDICATED THUS: -

FUNCTIONAL CLASSIFICATION: INTERSTATE

I-70 EB / WB
ADT: 24,100 (2023)
MU: 10,002 (41.5%)
SU: 795 (3.3%)
PV: 13,303 (55.2%)

0 100' 200' 300' — 1"= 100'
0 10' 20' 30' — 1"= 10'
0 50' 100' — 1"= 50'
0 50' 100' — 1"= 40'
0 50' 100' — 1"= 30'
0 50' 100' — 1"= 20'

FULL SIZE PLANS HAVE BEEN PREPARED USING STANDARD ENGINEERING SCALES. REDUCED SIZED PLANS WILL NOT CONFORM TO STANDARD SCALES. IN MAKING MEASUREMENTS ON REDUCED PLANS, THE ABOVE SCALES MAY BE USED.

J.U.L.I.E.
JOINT UTILITY LOCATION INFORMATION FOR EXCAVATION
1-800-892-0123
OR 811

STATE OF ILLINOIS
DEPARTMENT OF TRANSPORTATION

SUBMITTED Aug 12 20 24
REGIONAL ENGINEER

October 4, 2024
ENGINEER OF DESIGN AND ENVIRONMENT

October 4, 2024
DIRECTOR OF HIGHWAYS PROJECT IMPLEMENTATION

PROJECT ENGINEER: BILLIE OWEN
PROJECT MANAGER: STEVEN KEEL

CONTRACT NO. 76T82

design firm no. 184001036
whks
engineers + planners + land surveyors

GROSS LENGTH = 390.00 FT. = 0.073 MILE
NET LENGTH = 390.00 FT. = 0.073 MILE

PRINTED BY THE AUTHORITY OF THE STATE OF ILLINOIS

INDEX OF SHEETS

HIGHWAY STANDARDS

000001-08	STANDARD SYMBOLS, ABBREVIATIONS AND PATTERNS
001001-02	AREAS OF REINFORCEMENT BARS
001006	DECIMAL OF AN INCH AND OF A FOOT
420401-13	PAVEMENT CONNECTOR (PCC) FOR BRIDGE APPROACH SLAB
601101-02	CONCRETE HEADWALL FOR PIPE UNDERDRAIN
630001-13	STEEL PLATE BEAM GUARDRAIL
631031-18	TRAFFIC BARRIER TERMINAL, TYPE 6
701400-12	APPROACH TO LANE CLOSURE, FREEWAY/EXPRESSWAY
701402-12	LANE CLOSURE, FREEWAY/EXPRESSWAY, WITH BARRIER
701411-09	LANE CLOSURE, MULTILANE, AT ENTRANCE OR EXIT RAMP, FOR SPEEDS > 45 MPH
701901-09	TRAFFIC CONTROL DEVICES
704001-08	TEMPORARY CONCRETE BARRIER
780001-05	TYPICAL PAVEMENT MARKINGS
781001-04	TYPICAL APPLICATIONS RAISED REFLECTIVE PAVEMENT MARKERS
782006-01	GUARDRAIL AND BARRIER WALL REFLECTOR MOUNTING DETAILS
420001-10	PAVEMENT JOINTS
420701-03	PAVEMENT WELDED WIRE REINFORCEMENT
631011-10	TRAFFIC BARRIER TERMINAL, TYPE 2
642001-03	SHOULDER RUMBLE STRIPS, 16IN.

GENERAL NOTES

1. UNLESS NOTED OTHERWISE, STATIONS AND OFFSETS REFER TO CENTERLINE OF PROJECT.
2. UTILITIES KNOWN TO HAVE FACILITIES WITHIN THE PROJECT AREA:
   AT&T ILLINOIS - COMMUNICATIONS
   DEPARTMENT OF CENTRAL MANAGEMENT SERVICES - COMMUNICATIONS
   COMPUTER TECHNIQUES, LLC - COMMUNICATIONS

COMMITMENTS

1. NO COMMITMENTS FOR THIS PROJECT.

MIX DESIGN TABLE

LOCATION:	I-70
MIXTURE USE(S):	SHOULDER (SURFACE)
AC/PG:	PG 64-22
DESIGN AIR VOIDS:	4% @ Ndes=90
MIXTURE COMPOSITION (GRADATION)	IL 9.5
FRICTION AGGREGATE:	
QUALITY MANAGEMENT:	QC/QA
MTD:	NO

PLAN QUANTITIES FOR HOT-MIX ASPHALT ITEMS ARE CALCULATED USING A UNIT WEIGHT OF 112 LB/SQ YD/IN (59.8 KG/SQ M/25 MM THICKNESS).

ANY QCP PAY ITEM THAT HAS A QUANTITY OF 1600 TONS OR LESS WILL HAVE TWO SUBLOTS EACH OF WHICH WILL BE HALF OF THE PLAN QUANTITY OR HALF OF THE ADJUSTED QUANTITY BY THE RESIDENT ENGINEER/TECHNICIAN.

REV - MS

CODE NO.	ITEM	UNIT	TOTAL QUANTITY	CONSTR. CODE 90% FED 10% STATE BRIDGE 0013 003-0009 URBAN	CONSTR. CODE 90% FED 10% STATE BRIDGE 0013 003-0010 URBAN
20700220	POROUS GRANULAR EMBANKMENT	CU YD	181	90	91
21001000	GEOTECHNICAL FABRIC FOR GROUND STABILIZATION	SQ YD	815	407	408
40600290	BITUMINOUS MATERIALS (TACK COAT)	POUND	394	241	153
42000060	WELDED WIRE REINFORCEMENT	SQ YD	276	138	138
42000080	PAVEMENT CONNECTOR (PCC) FOR BRIDGE APPROACH SLAB	SQ YD	276	138	138
42001300	PROTECTIVE COAT	SQ YD	276	138	138
44000100	PAVEMENT REMOVAL	SQ YD	130	74	56
44000157	HOT-MIX ASPHALT SURFACE REMOVAL, 2"	SQ YD	1745	1067	678
44004250	PAVED SHOULDER REMOVAL	SQ YD	51	29	22
48203100	HOT-MIX ASPHALT SHOULDERS	TON	200	122	78
50102400	CONCRETE REMOVAL	CU YD	13.4	6.7	6.7
50300225	CONCRETE STRUCTURES	CU YD	66.3	33	33.3
50300255	CONCRETE SUPERSTRUCTURE	CU YD	13.4	6.7	6.7
50300260	BRIDGE DECK GROOVING	SQ YD	513	256	257

* SPECIALTY ITEMS

CODE NO.	ITEM	UNIT	TOTAL QUANTITY	CONSTR. CODE 90% FED 10% STATE BRIDGE 0013 003-0009 URBAN	CONSTR. CODE 90% FED 10% STATE BRIDGE 0013 003-0010 URBAN
50300300	PROTECTIVE COAT	SQ YD	594	296	298
50301350	CONCRETE SUPERSTRUCTURE (APPROACH SLAB)	CU YD	211.3	105.4	105.9
50800205	REINFORCEMENT BARS, EPOXY COATED	POUND	57620	28720	28900
50800515	BAR SPLICERS	EACH	496	248	248
52000110	PREFORMED JOINT STRIP SEAL	FOOT	165	82	83
60100060	CONCRETE HEADWALLS FOR PIPE DRAINS	EACH	10	5	5
60146304	PIPE UNDERDRAINS FOR STRUCTURES 4"	FOOT	503	251	252
* 63000001	STEEL PLATE BEAM GUARDRAIL, TYPE A, 6 FOOT POSTS	FOOT	112.5	62.5	50
* 63100045	TRAFFIC BARRIER TERMINAL, TYPE 2	EACH	1	1	
* 63100085	TRAFFIC BARRIER TERMINAL, TYPE 6	EACH	5	3	2
63200310	GUARDRAIL REMOVAL	FOOT	313	189	124
64200116	SHOULDER RUMBLE STRIPS, 16 INCH	FOOT	1980	1165	815
67000400	ENGINEER'S FIELD OFFICE, TYPE A	CAL MO	6	3	3
67100100	MOBILIZATION	L SUM	1	0.5	0.5

* SPECIALTY ITEMS

CODE NO.	ITEM	UNIT	TOTAL QUANTITY	CONSTR. CODE 90% FED 10% STATE BRIDGE 0013 003-0009 URBAN	CONSTR. CODE 90% FED 10% STATE BRIDGE 0013 003-0010 URBAN
70100207	TRAFFIC CONTROL AND PROTECTION, STANDARD 701402	EACH	2	1	1
70100420	TRAFFIC CONTROL AND PROTECTION, STANDARD 701411	EACH	2	1	1
70107007	PAVEMENT MARKING BLACKOUT TAPE, 7"	FOOT	11722	5175	6547
70107009	PAVEMENT MARKING BLACKOUT TAPE, 9"	FOOT	564		564
70107025	CHANGEABLE MESSAGE SIGN	CAL DA	120	60	60
70300150	SHORT TERM PAVEMENT MARKING REMOVAL	SQ FT	7229	2985	4244
70300241	TEMPORARY PAVEMENT MARKING - LINE 6"- PAINT	FOOT	13490	5969	7521
70300251	TEMPORARY PAVEMENT MARKING - LINE 8"- PAINT	FOOT	720		720
70400100	TEMPORARY CONCRETE BARRIER	FOOT	862.5	437.5	425
70400200	RELOCATE TEMPORARY CONCRETE BARRIER	FOOT	800	400	400
70600260	IMPACT ATTENUATORS, TEMPORARY (FULLY REDIRECTIVE, NARROW), TEST LEVEL 3	EACH	2	1	1
70600332	IMPACT ATTENUATORS, RELOCATE (FULLY REDIRECTIVE, NARROW), TEST LEVEL 3	EACH	2	1	1
* 78009006	MODIFIED URETHANE PAVEMENT MARKING - LINE 6"	FOOT	878	439	439
* 78011035	GROOVING FOR RECESSED PAVEMENT MARKING 7"	FOOT	406	203	203

* SPECIALTY ITEMS

	CODE NO.	ITEM	UNIT	TOTAL QUANTITY	CONSTR. CODE 90% FED 10% STATE BRIDGE 0013 003-0009 URBAN	CONSTR. CODE 90% FED 10% STATE BRIDGE 0013 003-0010 URBAN
*	78100100	RAISED REFLECTIVE PAVEMENT MARKER	EACH	8	4	4
*	78100300	REPLACEMENT REFLECTOR	EACH	160	60	100
*	78200005	GUARDRAIL REFLECTORS, TYPE A	EACH	10	6	4
*	78200011	BARRIER WALL REFLECTORS, TYPE C	EACH	8	4	4
	78300200	RAISED REFLECTIVE PAVEMENT MARKER REMOVAL	EACH	3	3	
	X0327487	TRIAXIAL GEOGRID REINFORCEMENT, TYPE I	SQ YD	815	407	408
	X4811300	AGGREGATE SHOULDERS, TYPE B (SPECIAL)	TON	74	36	38
	X7200201	WIDTH RESTRICTION SIGNING	L SUM	1	0.5	0.5
	X7830050	RAISED REFLECTIVE PAVEMENT MARKER, REFLECTOR REMOVAL	EACH	160	60	100
	Z0004552	APPROACH SLAB REMOVAL	SQ YD	676.7	344.5	332.2
	Z0013798	CONSTRUCTION LAYOUT	L SUM	1	0.5	0.5
Ø	Z0076600	TRAINEES	HOUR	500	500	
Ø	Z0076604	TRAINEES TRAINING PROGRAM GRADUATE	HOUR	500	500	

* SPECIALTY ITEMS

Ø 0042

REV - MS

MODEL: SOQ-4 [Sheet]
FILE NAME: C:\SP\WHKS & CO\Jobs-Spring - Projects\IDOT D-89167 PTB 197-041\9167.14 I70 over Beaver Creek\CADD10.12\CADD Data\Sheets\D876T82-sht-SOQ.dgn

design firm no. 184001036 whks engineers + planners + land surveyors

USER NAME = bjohnson	DESIGNED – GSJ/BJJ	REVISED –	
	DRAWN – GSJ/BJJ	REVISED –	
PLOT SCALE = 0.16666633 ' / in.	CHECKED – RKA	REVISED –	
PLOT DATE = 6/14/2024	DATE – 3/21/2024	REVISED –	

STATE OF ILLINOIS
DEPARTMENT OF TRANSPORTATION

SUMMARY OF QUANTITIES
I-70 BRIDGE APPROACH REPLACEMENTS

SCALE: 1"=50' | SHEET 4 OF 4 SHEETS | STA. TO STA.

FAI RTE.	SECTION	COUNTY	TOTAL SHEETS	SHEET NO.
70	3-4BI	BOND	31	6

CONTRACT NO. 76T82

ILLINOIS | FED. AID PROJECT

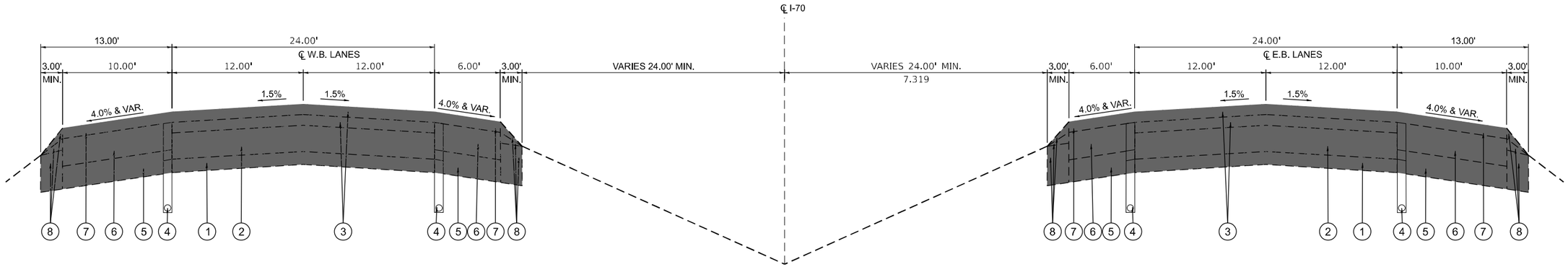

EXISTING TYPICAL TANGENT CROSS SECTION

W.B. STA 2621+81.50 TO STA 2621+96.50 E.B. STA 2621+81.50 TO STA 2621+96.50
W.B. STA 2621+96.50 TO STA 2623+61.50 E.B. STA 2621+96.50 TO STA 2623+61.50 - BRIDGE OMISSION
W.B. STA 2623+61.50 TO STA 2623+76.50 E.B. STA 2623+61.50 TO STA 2623+76.50

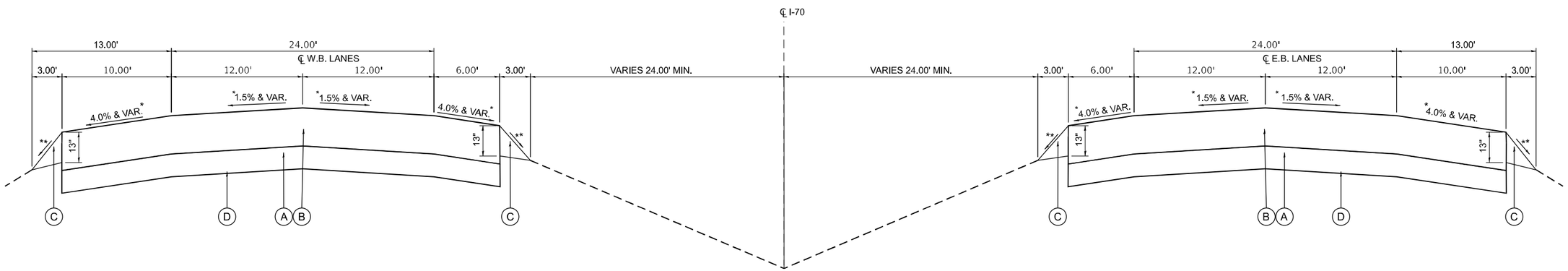

PROPOSED TYPICAL TANGENT CROSS SECTION

W.B. STA 2621+81.50 TO STA 2621+96.50 E.B. STA 2621+81.50 TO STA 2621+96.50
W.B. STA 2621+96.50 TO STA 2623+61.50 E.B. STA 2621+96.50 TO STA 2623+61.50 - BRIDGE OMISSION
W.B. STA 2623+61.50 TO STA 2623+76.50 E.B. STA 2623+61.50 TO STA 2623+76.50

EXISTING LEGEND

1. EXISTING STABILIZED SUBBASE 4"
2. EXISTING CONTINUOUSLY REINFORCED P.C.C. PAVEMENT 8"
3. EXISTING HMA OVERLAY 3/4"
4. EXISTING PIPE UNDERDRAIN
5. EXISTING AGGREGATE SUBBASE
6. EXISTING HMA SHOULDER
7. EXISTING HMA SHOULDER 3-1/4"
8. EXISTING AGGREGATE SHOULDER

TO BE REMOVED

PROPOSED LEGEND

- (A) PCC PAVEMENT CONNECTOR - AGGREGATE BASE
- (B) PCC PAVEMENT CONNECTOR
- (C) AGGREGATE SHOULDERS, TYPE B (SPECIAL)
- (D) TRIAXIAL GEOGRID REINFORCEMENT, TYPE I

* VARIES FOR TRANSITION TO PROPOSED APPROACH PAVEMENT
** VARIES (9% MAX)

MODEL: TYP-1 [Sheet]
FILE NAME: C:\SP\WHKS & COUjobs-Spring - Projects\IDOT D-8\9167 PTB 197-041\9167.14 I70 over Beaver Creek\CADD10.12\CADD Data\Sheets\D876T82-sht-typical-100scale.dgn

design firm no. 184001036 whks engineers • planners • land surveyors

USER NAME = bjohnson	DESIGNED - GSJ/BJJ	REVISED -	
	DRAWN - GSJ/BJJ	REVISED -	
PLOT SCALE = 0.16666633 ' / in.	CHECKED - RKA	REVISED -	
PLOT DATE = 6/19/2024	DATE - 3/21/2024	REVISED -	

STATE OF ILLINOIS
DEPARTMENT OF TRANSPORTATION

TYPICAL SECTIONS
I-70 BRIDGE APPROACH REPLACEMENTS

SCALE: 1"=5' | SHEET 1 OF 1 SHEETS | STA. TO STA.

FAI RTE.	SECTION	COUNTY	TOTAL SHEETS	SHEET NO.
70	3-4BI	BOND	31	7
		CONTRACT NO. 76T82		
		ILLINOIS FED. AID PROJECT		

40600290 BITUMINOUS MATERIALS (TACK COAT)

FAI ROUTE 70					POUND
SN 003-0009 (I-70 E.B.)					
LT	2620+21.50	TO	LT	2622+36.50	33
RT	2618+31.50	TO	RT	2621+81.50	88
LT	2623+41.50	TO	LT	2626+41.50	45
RT	2623+76.50	TO	RT	2626+76.50	75
SN 003-0010 (I-70 W.B.)					
LT	2618+81.50	TO	LT	2621+81.50	75
RT	2619+36.50	TO	RT	2622+36.50	45
RT	2623+41.50	TO	RT	2625+56.50	33
				TOTAL	394

42000060 WELDED WIRE REINFORCEMENT

FAI ROUTE 70					SQ YD
SN 003-0009 (I-70 E.B.)					
CL	2621+81.50	TO	CL	2621+96.50	69
CL	2623+61.50	TO	CL	2623+76.50	69
SN 003-0010 (I-70 W.B.)					
CL	2621+81.50	TO	CL	2621+96.50	69
CL	2623+61.50	TO	CL	2623+76.50	69
				TOTAL	276

42000080 PAVEMENT CONNECTOR (PCC) FOR BRIDGE APPROACH SLAB

FAI ROUTE 70					SQ YD
SN 003-0009 (I-70 E.B.)					
CL	2621+81.50	TO	CL	2621+96.50	69
CL	2623+61.50	TO	CL	2623+76.50	69
SN 003-0010 (I-70 W.B.)					
CL	2621+81.50	TO	CL	2621+96.50	69
CL	2623+61.50	TO	CL	2623+76.50	69
				TOTAL	276

42001300 PROTECTIVE COAT

FAI ROUTE 70					SQ YD
SN 003-0009 (I-70 E.B.)					
CL	2621+81.50	TO	CL	2621+96.50	69
CL	2623+61.50	TO	CL	2623+76.50	69
SN 003-0010 (I-70 W.B.)					
CL	2621+81.50	TO	CL	2621+96.50	69
CL	2623+61.50	TO	CL	2623+76.50	69
				TOTAL	276

44000100 PAVEMENT REMOVAL

FAI ROUTE 70					SQ YD
SN 003-0009 (I-70 E.B.)					
CL	2621+81.50	TO	CL	2621+87.50	28
CL	2623+66.50	TO	CL	2623+76.50	46
SN 003-0010 (I-70 W.B.)					
CL	2621+81.50	TO	CL	2621+87.50	28
CL	2623+70.50	TO	CL	2623+76.50	28
				TOTAL	130

44000157 HOT-MIX ASPHALT SURFACE REMOVAL, 2"

FAI ROUTE 70					SQ YD
SN 003-0009 (I-70 E.B.)					
LT	2619+66.50	TO	LT	2621+81.50	144
RT	2618+31.50	TO	RT	2621+81.50	389
LT	2623+76.50	TO	LT	2626+76.50	200
RT	2623+76.50	TO	RT	2626+76.50	334
SN 003-0010 (I-70 W.B.)					
LT	2618+81.50	TO	LT	2621+81.50	334
RT	2618+81.50	TO	RT	2621+81.50	200
RT	2623+76.50	TO	RT	2625+91.50	144
				TOTAL	1,745

44004250 PAVED SHOULDER REMOVAL

FAI ROUTE 70					SQ YD
SN 003-0009 (I-70 E.B.)					
LT/RT	2621+81.50	TO	LT/RT	2621+87.50	11
LT/RT	2623+66.50	TO	LT/RT	2623+76.50	18
SN 003-0010 (I-70 W.B.)					
LT/RT	2621+81.50	TO	LT/RT	2621+87.50	11
LT/RT	2623+70.50	TO	LT/RT	2623+76.50	11
				TOTAL	51

48203100 HOT-MIX ASPHALT SHOULDERS

FAI ROUTE 70					TON
SN 003-0009 (I-70 E.B.)					
LT	2620+21.50	TO	LT	2622+36.50	17
RT	2618+31.50	TO	RT	2621+81.50	44
LT	2623+41.50	TO	LT	2626+41.50	23
RT	2623+76.50	TO	RT	2626+76.50	38
SN 003-0010 (I-70 W.B.)					
LT	2618+81.50	TO	LT	2621+81.50	38
RT	2619+36.50	TO	RT	2622+36.50	23
RT	2623+41.50	TO	RT	2625+56.50	17
				TOTAL	200

63000001 STEEL PLATE BEAM GUARDRAIL, TYPE A, 6 FOOT POSTS

FAI ROUTE 70					FOOT
SN 003-0009 (I-70 E.B.)					
LT	2621+74.61	TO	LT	2621+99.61	25.0
RT	2621+74.61	TO	RT	2621+99.61	25.0
RT	2623+78.39	TO	RT	2623+90.89	12.5
SN 003-0010 (I-70 W.B.)					
LT	2623+78.39	TO	LT	2624+03.39	25.0
RT	2623+78.39	TO	RT	2624+03.39	25.0
				TOTAL	112.5

63100045 TRAFFIC BARRIER TERMINAL, TYPE 2

FAI ROUTE 70					EACH
SN 003-0009 (I-70 E.B.)					
RT	2623+90.89	TO	RT	2624+03.39	1
				TOTAL	1

63100085 TRAFFIC BARRIER TERMINAL, TYPE 6

FAI ROUTE 70					EACH
SN 003-0009 (I-70 E.B.)					
LT	2621+99.61	TO	LT	2622+36.50	1
RT	2621+99.61	TO	RT	2622+36.50	1
RT	2623+41.50	TO	RT	2623+78.39	1
SN 003-0010 (I-70 W.B.)					
LT	2623+41.50	TO	LT	2623+78.39	1
RT	2623+41.50	TO	RT	2623+78.39	1
				TOTAL	5

63200310 GUARDRAIL REMOVAL

FAI ROUTE 70					FOOT
SN 003-0009 (I-70 E.B.)					
LT	2621+74.61	TO	LT	2622+36.50	62
RT	2621+74.61	TO	RT	2622+36.50	62
RT	2623+41.50	TO	RT	2623+78.39	65
SN 003-0010 (I-70 W.B.)					
LT	2623+41.50	TO	LT	2624+03.39	62
RT	2623+41.50	TO	RT	2624+03.39	62
				TOTAL	313

64200116 SHOULDER RUMBLE STRIPS, 16 INCH

FAI ROUTE 70					FOOT
SN 003-0009 (I-70 E.B.)					
LT	2619+66.50	TO	LT	2621+81.50	215
RT	2618+31.50	TO	RT	2621+81.50	350
LT	2623+76.50	TO	LT	2626+76.50	300
RT	2623+76.50	TO	RT	2626+76.50	300
SN 003-0010 (I-70 W.B.)					
LT	2618+81.50	TO	LT	2621+81.50	300
RT	2618+81.50	TO	RT	2621+81.50	300
RT	2623+76.50	TO	RT	2625+91.50	215
				TOTAL	1,980

67000400 ENGINEER'S FIELD OFFICE, TYPE A

FAI ROUTE 70	CAL MO
SN 003-0009 (I-70 E.B.)	3
SN 003-0010 (I-70 W.B.)	3
TOTAL	6

67100100 MOBILIZATION

FAI ROUTE 70	L SUM
SN 003-0009 (I-70 E.B.)	0.5
SN 003-0010 (I-70 W.B.)	0.5
TOTAL	1

70100207 TRAFFIC CONTROL AND PROTECTION, STANDARD 701402

FAI ROUTE 70	EACH
SN 003-0009 (I-70 E.B.)	1
SN 003-0010 (I-70 W.B.)	1
TOTAL	2

70100420 TRAFFIC CONTROL AND PROTECTION, STANDARD 701411

FAI ROUTE 70	EACH
SN 003-0009 (I-70 E.B.)	1
SN 003-0010 (I-70 W.B.)	1
TOTAL	2

70107007 PAVEMENT MARKING BLACKOUT TAPE, 7"

FAI ROUTE 70					FOOT
SN 003-0009 (I-70 E.B.)					
LT	2604+00.00	TO	LT	2627+00.00	2,300
CL	2604+00.00	TO	CL	2627+00.00	575
RT	2604+00.00	TO	RT	2627+00.00	2,300
SN 003-0010 (I-70 W.B.)					
LT	2618+00.00	TO	LT	2629+80.00	1,180
LT	2634+89.00	TO	LT	2646+00.00	1,111
CL	2618+00.00	TO	CL	2646+00.00	700
RT	2618+00.00	TO	RT	2646+00.00	2,800
LT	14+00.00	TO	LT	20+00.00	600
LT	14+00.00	TO	LT	15+00.00	100
LT	17+75.00	TO	LT	20+00.00	56
				TOTAL	11,722

70107009 PAVEMENT MARKING BLACKOUT TAPE, 9"

FAI ROUTE 70					FOOT
SN 003-0010 (I-70 W.B.)					
LT	2632+00.00	TO	LT	2634+89.00	289
LT	15+00.00	TO	LT	17+75.00	275
				TOTAL	564

70107025 CHANGEABLE MESSAGE SIGN

FAI ROUTE 70	CAL DA
SN 003-0009 (I-70 E.B.)	60
SN 003-0010 (I-70 W.B.)	60
TOTAL	120

70300150 SHORT TERM PAVEMENT MARKING REMOVAL

FAI ROUTE 70						SQ FT
STAGE I - SN 003-0009 (I-70 E.B.)						
RT	2605+44.50	TO	RT	2615+44.50	6"	500
RT	2615+44.50	TO	RT	2624+01.50	6"	429
LT	2615+44.50	TO	LT	2626+72.50	6"	564
STAGE II - SN 003-0009 (I-70 E.B.)						
LT	2604+09.50	TO	LT	2624+01.50	6"	996
RT	2614+09.50	TO	RT	2624+01.50	6"	496
STAGE I - SN 003-0010 (I-70 W.B.)						
RT	2619+00.00	TO	RT	2636+05.00	6"	853
LT	2621+56.50	TO	LT	2625+13.50	6"	179
LT	2625+13.50	TO	LT	2631+75.00	6"	331
LT	2635+13.50	TO	LT	2645+13.50	6"	500
STAGE II - SN 003-0010 (I-70 W.B.)						
RT	2619+00.00	TO	RT	2634+55.00	6"	778
LT	2622+71.50	TO	LT	2635+13.50	6"	621
LT	2635+13.50	TO	LT	2645+13.50	6"	500
STAGE I - SN 003-0010 (I-70 W.B.)						
LT	2633+00.00	TO	LT	2635+15.00	8"	144
LT	2633+00.00	TO	LT	2634+70.00	8"	114
STAGE II - SN 003-0010 (I-70 W.B.)						
LT	2633+00.00	TO	LT	2635+00.00	8"	134
LT	2633+00.00	TO	LT	2634+35.00	8"	90
					TOTAL	7,229

70300241 TEMPORARY PAVEMENT MARKING - LINE 6"- PAINT

FAI ROUTE 70					FOOT
STAGE I - SN 003-0009 (I-70 E.B.)					
RT	2605+44.50	TO	RT	2615+44.50	1,000
RT	2615+44.50	TO	RT	2624+01.50	857
LT	2615+44.50	TO	LT	2626+72.50	1,128
STAGE II - SN 003-0009 (I-70 E.B.)					
LT	2604+09.50	TO	LT	2624+01.50	1,992
RT	2614+09.50	TO	RT	2624+01.50	992
STAGE I - SN 003-0010 (I-70 W.B.)					
RT	2619+00.00	TO	RT	2636+05.00	1,705
LT	2621+56.50	TO	LT	2625+13.50	357
LT	2625+13.50	TO	LT	2631+75.00	662
LT	2635+13.50	TO	LT	2645+13.50	1,000
STAGE II - SN 003-0010 (I-70 W.B.)					
RT	2619+00.00	TO	RT	2634+55.00	1,555
LT	2622+71.50	TO	LT	2635+13.50	1,242
LT	2635+13.50	TO	LT	2645+13.50	1,000
				TOTAL	13,490

70300251 TEMPORARY PAVEMENT MARKING - LINE 8"- PAINT

FAI ROUTE 70					FOOT
STAGE I - SN 003-0010 (I-70 W.B.)					
LT	2633+00.00	TO	LT	2635+15.00	215
LT	2633+00.00	TO	LT	2634+70.00	170
STAGE II - SN 003-0010 (I-70 W.B.)					
LT	2633+00.00	TO	LT	2635+00.00	200
LT	2633+00.00	TO	LT	2634+35.00	135
				TOTAL	720

70400100 TEMPORARY CONCRETE BARRIER

FAI ROUTE 70					FOOT
STAGE I - SN 003-0009 (I-70 E.B.)					
LT	262+00.00	TO	LT	263+50.00	150
RT	263+50.00	TO	RT	266+00.00	250
STAGE II - SN 003-0009 (I-70 E.B.)					
LT	2623+65.00	TO	LT	2624+02.50	37.5
STAGE I - SN 003-0010 (I-70 W.B.)					
LT	2621+50.00	TO	LT	2624+00.00	250
LT	2624+00.00	TO	LT	2625+50.00	150
STAGE II - SN 003-0010 (I-70 W.B.)					
LT	2625+50.00	TO	LT	2625+75.00	25
				TOTAL	862.5

70400200 RELOCATE TEMPORARY CONCRETE BARRIER

FAI ROUTE 70					FOOT
STAGE II - SN 003-0009 (I-70 E.B.)					
LT	2619+65.00	TO	LT	2621+52.50	187.5
RT	2621+52.50	TO	RT	2623+65.00	212.5
STAGE II - SN 003-0010 (I-70 W.B.)					
LT	2621+50.00	TO	LT	2624+00.00	250
RT	2624+00.00	TO	RT	2625+50.00	150
				TOTAL	800

70600260 IMPACT ATTENUATORS, TEMPORARY (FULLY REDIRECTIVE, NARROW), TEST LEVEL 3

FAI ROUTE 70		EACH
STAGE I - SN 003-0009 (I-70 E.B.)		
RT	2619+92.50	1
STAGE I - SN 003-0010 (I-70 W.B.)		
LT	2625+65.00	1
	TOTAL	2

70600332 IMPACT ATTENUATORS, RELOCATE (FULLY REDIRECTIVE, NARROW), TEST LEVEL 3

FAI ROUTE 70		EACH
STAGE I - SN 003-0009 (I-70 E.B.)		
RT	2619+56.00	1
STAGE I - SN 003-0010 (I-70 W.B.)		
LT	2625+91.00	1
	TOTAL	2

78009006 MODIFIED URETHANE PAVEMENT MARKING - LINE 6"

FAI ROUTE 70					FOOT
SN 003-0009 (I-70 E.B.)					
LT	2621+81.50	TO	LT	2623+76.50	195
CL	2621+81.50	TO	CL	2623+76.50	49
RT	2621+81.50	TO	RT	2623+76.50	195
SN 003-0010 (I-70 W.B.)					
LT	2621+81.50	TO	LT	2623+76.50	195
CL	2621+81.50	TO	CL	2623+76.50	49
RT	2621+81.50	TO	RT	2623+76.50	195
				TOTAL	878

78011035 GROOVING FOR RECESSED PAVEMENT MARKING 7"

FAI ROUTE 70					FOOT
SN 003-0009 (I-70 E.B.)					
LT	2621+81.50	TO	LT	2622+36.50	55
CL	2621+81.50	TO	CL	2622+36.50	14
RT	2621+81.50	TO	RT	2622+36.50	55
LT	2623+41.50	TO	LT	2623+76.50	35
CL	2623+41.50	TO	CL	2623+76.50	9
RT	2623+41.50	TO	RT	2623+76.50	35
SN 003-0010 (I-70 W.B.)					
LT	2621+81.50	TO	LT	2622+36.50	55
CL	2621+81.50	TO	CL	2622+36.50	14
RT	2621+81.50	TO	RT	2622+36.50	55
LT	2623+41.50	TO	LT	2623+76.50	35
CL	2623+41.50	TO	CL	2623+76.50	9
RT	2623+41.50	TO	RT	2623+76.50	35
				TOTAL	406

78100100 RAISED REFLECTIVE PAVEMENT MARKER

FAI ROUTE 70					EACH
SN 003-0009 (I-70 E.B.)					
CL	2621+96.50	TO	CL	2622+36.50	2
CL	2623+41.50	TO	CL	2623+61.50	2
SN 003-0010 (I-70 W.B.)					
CL	2621+96.50	TO	CL	2622+36.50	2
CL	2623+41.50	TO	CL	2623+61.50	2
				TOTAL	8

78100300 REPLACEMENT REFLECTOR

FAI ROUTE 70					EACH
SN 003-0009 (I-70 E.B.)					
CL	2604+00.00	TO	CL	2627+00.00	60
SN 003-0010 (I-70 W.B.)					
CL	2618+00.00	TO	CL	2646+00.00	72
LT	15+00.00	TO	LT	20+00.00	28
				TOTAL	160

78200005 GUARDRAIL REFLECTORS, TYPE A

FAI ROUTE 70					EACH
SN 003-0009 (I-70 E.B.)					
LT	2621+74.61	TO	LT	2622+36.50	2
RT	2621+74.61	TO	RT	2622+36.50	2
RT	2623+41.50	TO	RT	2623+78.39	2
SN 003-0010 (I-70 W.B.)					
LT	2623+41.50	TO	LT	2624+03.39	2
RT	2623+41.50	TO	RT	2624+03.39	2
				TOTAL	10

78200011 BARRIER WALL REFLECTORS, TYPE C

FAI ROUTE 70					EACH
SN 003-0009 (I-70 E.B.)					
LT	262+00.00	TO	LT	263+50.00	4
RT	263+50.00	TO	RT	266+00.00	
SN 003-0010 (I-70 W.B.)					
LT	2621+50.00	TO	LT	2624+00.00	4
LT	2624+00.00	TO	LT	2625+50.00	
				TOTAL	8

78300200 RAISED REFLECTIVE PAVEMENT MARKER REMOVAL

FAI ROUTE 70					EACH
SN 003-0009 (I-70 E.B.)					
CL	2622+36.50	TO	CL	2623+41.50	3
				TOTAL	3

X4811300 AGGREGATE SHOULDERS, TYPE B (SPECIAL)

FAI ROUTE 70					TON
SN 003-0009 (I-70 E.B.)					
LT	2621+74.61	TO	LT	2622+36.50	10
RT	2621+74.61	TO	RT	2622+36.50	10
LT	2623+41.50	TO	LT	2623+76.50	6
RT	2623+41.50	TO	RT	2624+06.55	10
SN 003-0010 (I-70 W.B.)					
LT	2621+81.50	TO	LT	2622+36.50	9
RT	2621+81.50	TO	RT	2622+36.50	9
LT	2623+41.50	TO	LT	2624+03.39	10
RT	2623+41.50	TO	RT	2624+03.39	10
				TOTAL	74

X7200201 WIDTH RESTRICTION SIGNING

FAI ROUTE 70	L SUM
SN 003-0009 (I-70 E.B.)	0.5
SN 003-0010 (I-70 W.B.)	0.5
TOTAL	1

X7830050 RAISED REFLECTIVE PAVEMENT MARKER, REFLECTOR REMOVAL

FAI ROUTE 70					EACH
SN 003-0009 (I-70 E.B.)					
CL	2604+00.00	TO	CL	2627+00.00	60
SN 003-0010 (I-70 W.B.)					
CL	2618+00.00	TO	CL	2646+00.00	72
LT	15+00.00	TO	LT	20+00.00	28
				TOTAL	160

Z0013798 CONSTRUCTION LAYOUT

FAI ROUTE 70	L SUM
SN 003-0009 (I-70 E.B.)	0.5
SN 003-0010 (I-70 W.B.)	0.5
TOTAL	1

REV - MS

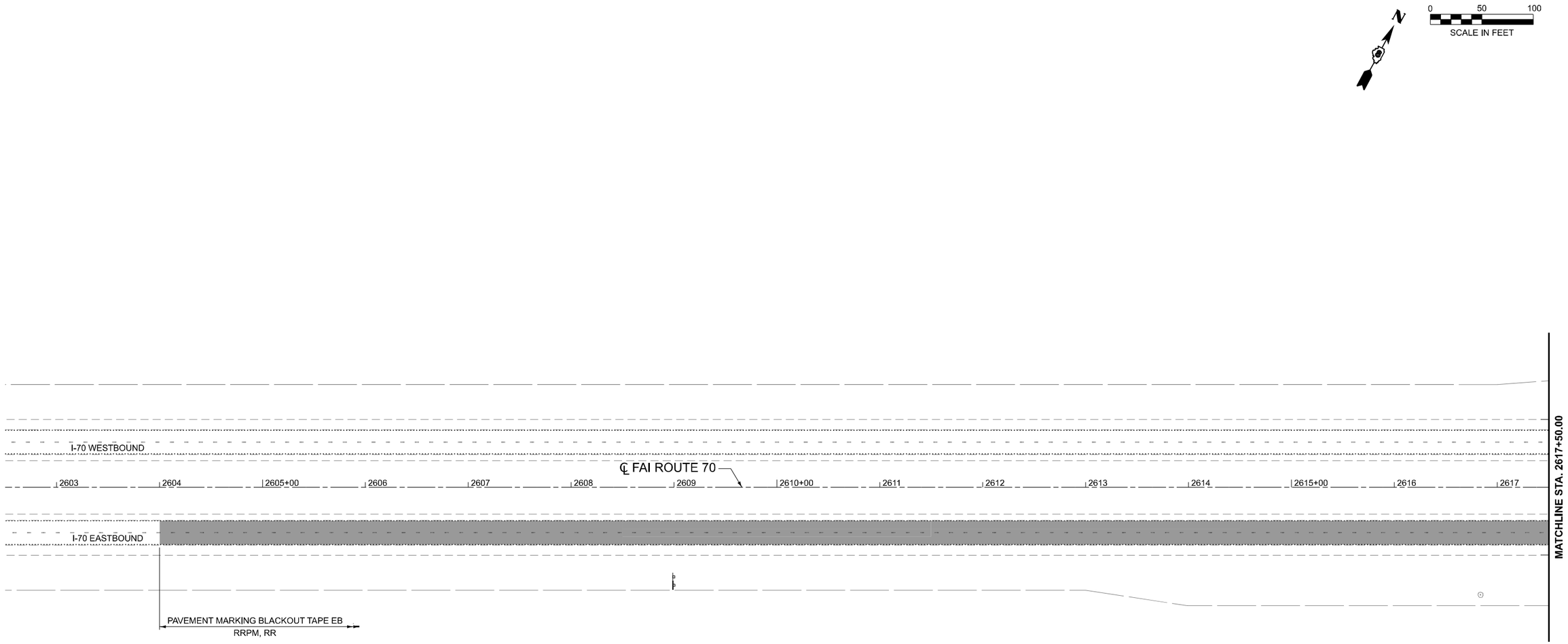

LEGEND

- APPROACH SLAB REMOVAL
- PAVEMENT / PAVED SHOULDER REMOVAL
- PAVEMENT MARKING REMOVAL & RAISED REFLECTIVE PAVEMENT MARKER, REFLECTOR REMOVAL
- GUARDRAIL REMOVAL
- HMA SURFACE REMOVAL

MODEL: I70 - Plan 1 [Sheet]
FILE NAME: C:\SP\WHKS & CO\Jobs-Spring - Projects\IDOT D-8\9167 PTB 197-041\9167.14 I70 over Beaver Creek\CADD10.12\CADD Data\Sheets\D876T82-sht-removal.dgn

design firm no. 184001036
whks
engineers + planners + land surveyors

USER NAME = bjohnson	DESIGNED - GSJ/BJJ	REVISED -	
	DRAWN - GSJ/BJJ	REVISED -	
PLOT SCALE = 0.16666633 ' / in.	CHECKED - RKA	REVISED -	
PLOT DATE = 6/14/2024	DATE - RKA	REVISED -	

STATE OF ILLINOIS
DEPARTMENT OF TRANSPORTATION

ROADWAY REMOVAL PLAN
I-70 BRIDGE APPROACH REPLACEMENTS

SCALE: 1"=50' | SHEET 1 OF 3 SHEETS | STA. 2602+50.00 TO STA. 2617+50.00

FAI RTE.	SECTION	COUNTY	TOTAL SHEETS	SHEET NO.
70	3-4BI	BOND	31	10
		CONTRACT NO. 76T82		
		ILLINOIS	FED. AID PROJECT	

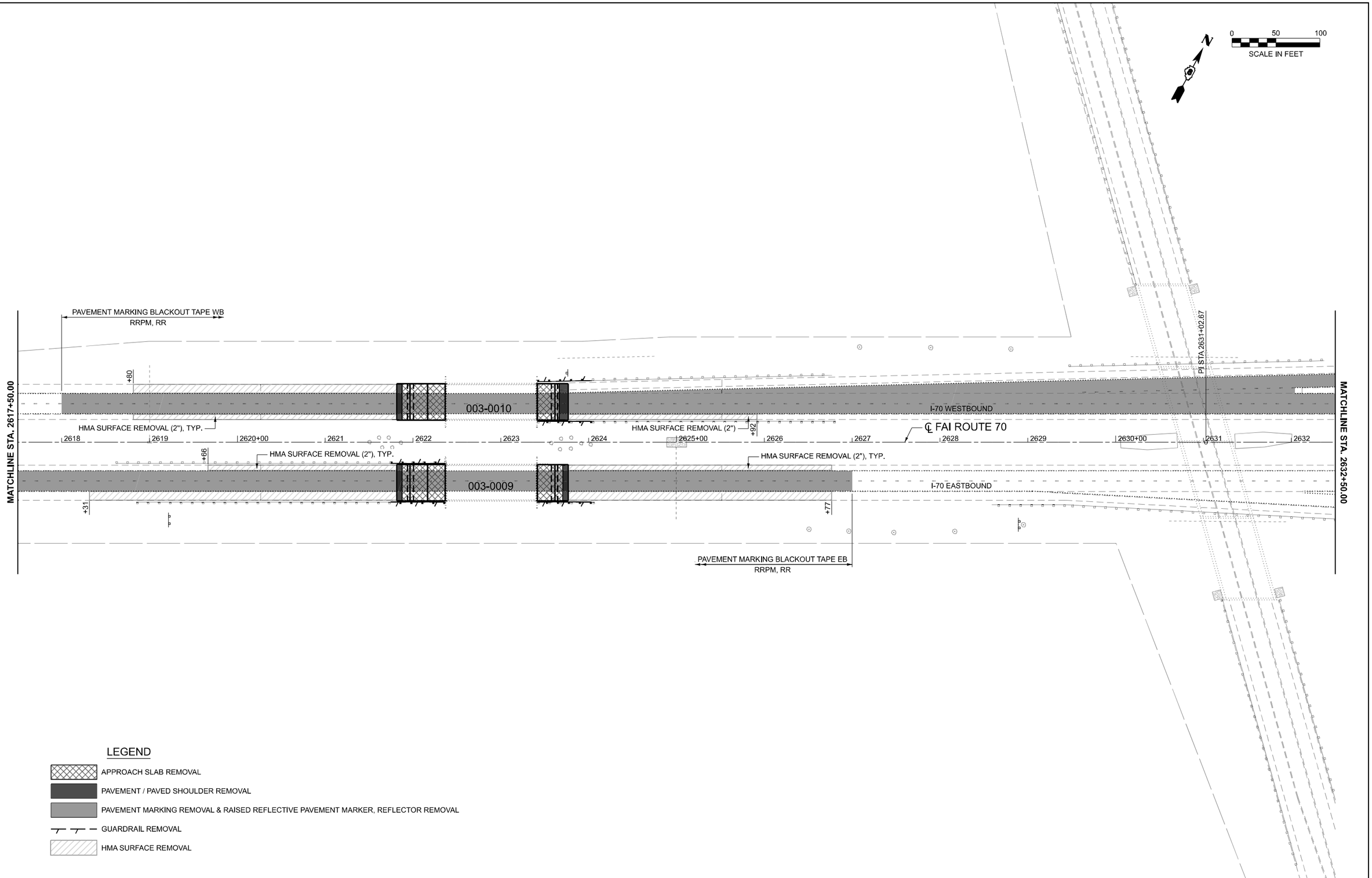

LEGEND

- APPROACH SLAB REMOVAL
- PAVEMENT / PAVED SHOULDER REMOVAL
- PAVEMENT MARKING REMOVAL & RAISED REFLECTIVE PAVEMENT MARKER, REFLECTOR REMOVAL
- GUARDRAIL REMOVAL
- HMA SURFACE REMOVAL

MODEL: I70 - Plan 2 [Sheet]
FILE NAME: C:\SP\WHKS & CO\Jobs-Spring - Projects\IDOT D-8\9167 PTB 197-041\9167.14 I70 over Beaver Creek\CADD10.12\CADD Data\Sheets\D876T82-sht-removal.dgn

design firm no. 184001036
whks
engineers + planners + land surveyors

USER NAME = bjohnson	DESIGNED - GSJ/BJJ	REVISED -	
	DRAWN - GSJ/BJJ	REVISED -	
PLOT SCALE = 0.16666633 ' / in.	CHECKED - RKA	REVISED -	
PLOT DATE = 6/17/2024	DATE - RKA	REVISED -	

STATE OF ILLINOIS
DEPARTMENT OF TRANSPORTATION

ROADWAY REMOVAL PLAN
I-70 BRIDGE APPROACH REPLACEMENTS

SCALE: 1"=50' | SHEET 2 OF 3 SHEETS | STA. 2617+50.00 TO STA. 2632+50.00

FAI RTE.	SECTION	COUNTY	TOTAL SHEETS	SHEET NO.
70	3-4BI	BOND	31	11
		CONTRACT NO. 76T82		
		ILLINOIS	FED. AID PROJECT	

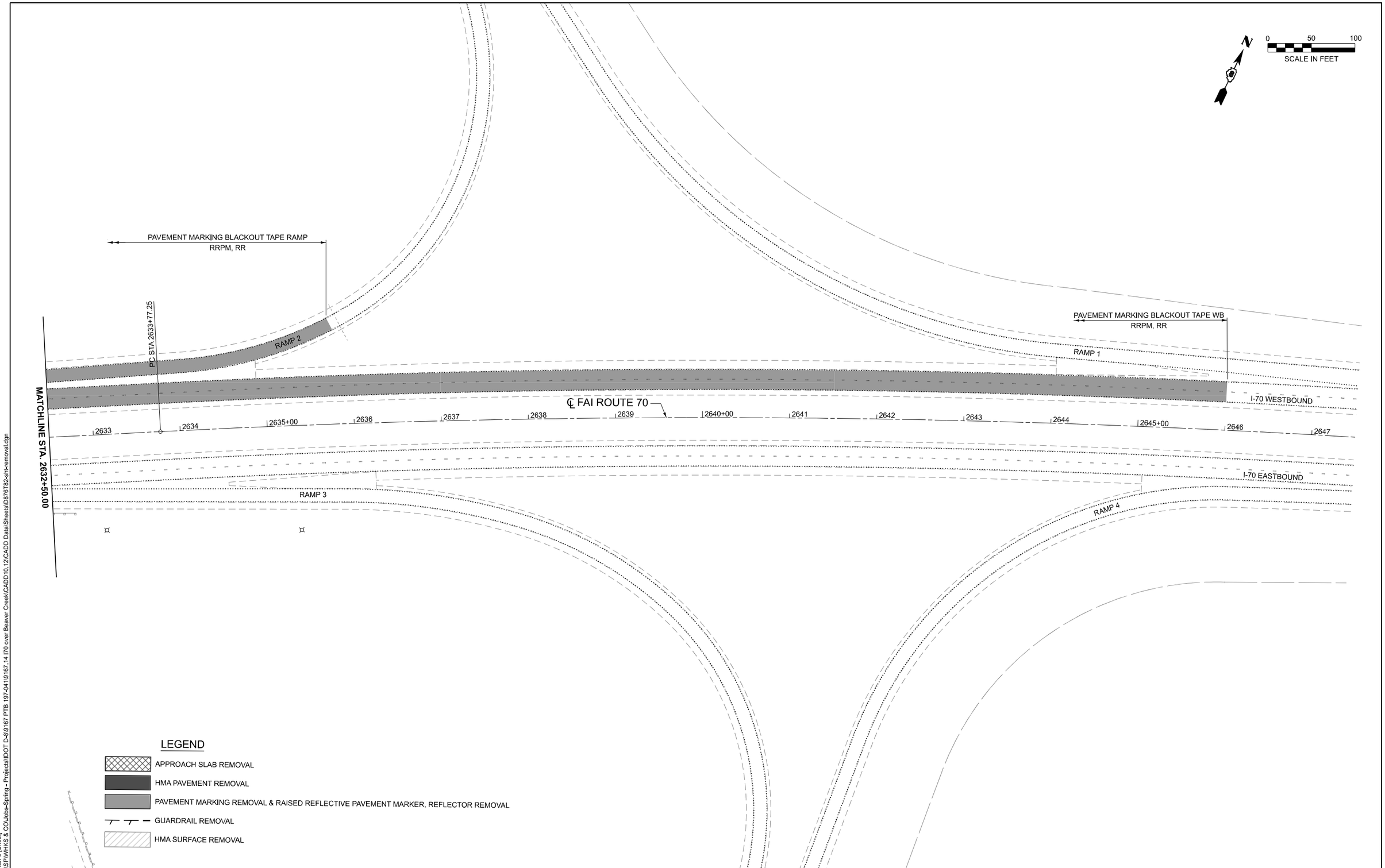

MODEL: I70 - Plan 3 [Sheet]
FILE NAME: C:\SP\WHKS & CO\Jobs-Spring - Projects\IDOT D-8\9167 PTB 197-041\9167.14 I70 over Beaver Creek\CADD10.12\CADD Data\Sheets\D76T82-sht-removal.dgn

design firm no. 184001036
whks
engineers + planners + land surveyors

USER NAME = bjohnson	DESIGNED - GSJ/BJJ	REVISED -	
	DRAWN - GSJ/BJJ	REVISED -	
PLOT SCALE = 0.16666633 ' / in.	CHECKED - RKA	REVISED -	
PLOT DATE = 6/17/2024	DATE - RKA	REVISED -	

STATE OF ILLINOIS
DEPARTMENT OF TRANSPORTATION

ROADWAY REMOVAL PLAN
I-70 BRIDGE APPROACH REPLACEMENTS

SCALE: 1"=50' | SHEET 3 OF 3 SHEETS | STA. 2632+50.00 TO STA. 2647+50.00

FAI RTE.	SECTION	COUNTY	TOTAL SHEETS	SHEET NO.
70	3-4BI	BOND	31	12
		CONTRACT NO. 76T82		
		ILLINOIS	FED. AID PROJECT	

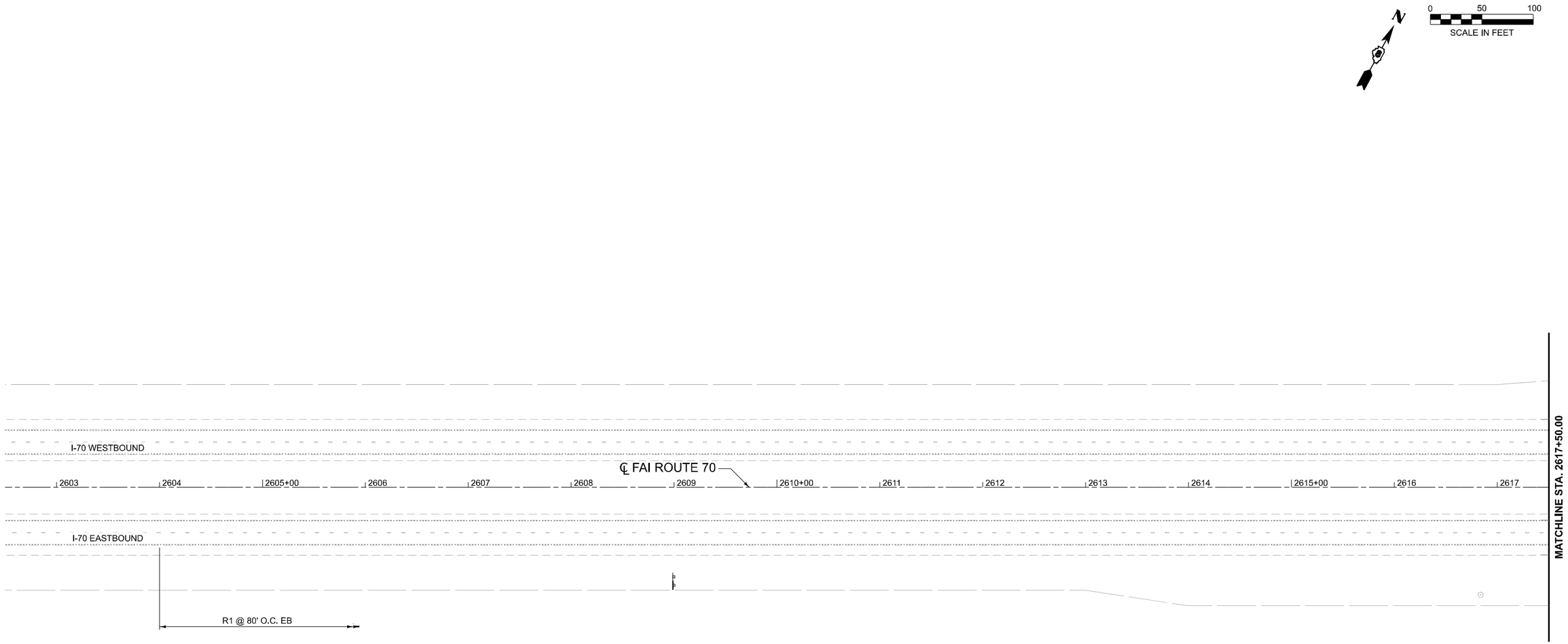

GUARDRAIL LEGEND

(A) PAY LIMITS FOR TRAFFIC BARRIER TERMINAL, TYPE 6

(B) PAY LIMITS FOR STEEL PLATE BEAM GUARDRAIL, TYPE A, 6 FOOT POSTS

(C) PAY LIMITS FOR TRAFFIC BARRIER TERMINAL, TYPE 2

PAVEMENT MARKING LEGEND

R1 REPLACEMENT REFLECTOR (DOUBLE 1-WAY CRYSTAL)
R2 RAISED REFLECTIVE PAVEMENT MARKER (DOUBLE 1-WAY CRYSTAL)

G1 GROOVING FOR RECESSED PAVEMENT MARK 7"

M1 MODIFIED URETHANE PAVEMENT MARK-LINE 6", YELLOW (SOLID)
M2 MODIFIED URETHANE PAVEMENT MARK-LINE 6", WHITE (10' DASH-30' SKIP)
M3 MODIFIED URETHANE PAVEMENT MARK-LINE 6", WHITE (SOLID)

MODEL: I70 - Plan 1 [Sheet]
FILE NAME: C:\SP\WHKS & CO\Jobs-Spring - Projects\IDOT D-8\9167 PTB 197-041\9167.14 I70 over Beaver Creek\CADD10.12\CADD Data\Sheets\D876T82-sht-plan.dgn

design firm no. 184001036
whks
engineers + planners + land surveyors

USER NAME = bjohnson	DESIGNED - GSJ/BJJ	REVISED -	
	DRAWN - GSJ/BJJ	REVISED -	
PLOT SCALE = 0.16666633 ' / in.	CHECKED - RKA	REVISED -	
PLOT DATE = 6/20/2024	DATE - RKA	REVISED -	

STATE OF ILLINOIS
DEPARTMENT OF TRANSPORTATION

PROPOSED ROADWAY PLAN
I-70 BRIDGE APPROACH REPLACEMENTS

SCALE: 1"=50' | SHEET 1 OF 3 SHEETS | STA. 2602+50.00 TO STA. 2617+50.00

FAI RTE.	SECTION	COUNTY	TOTAL SHEETS	SHEET NO.
70	3-4BI	BOND	31	13
		CONTRACT NO. 76T82		
		ILLINOIS	FED. AID PROJECT	

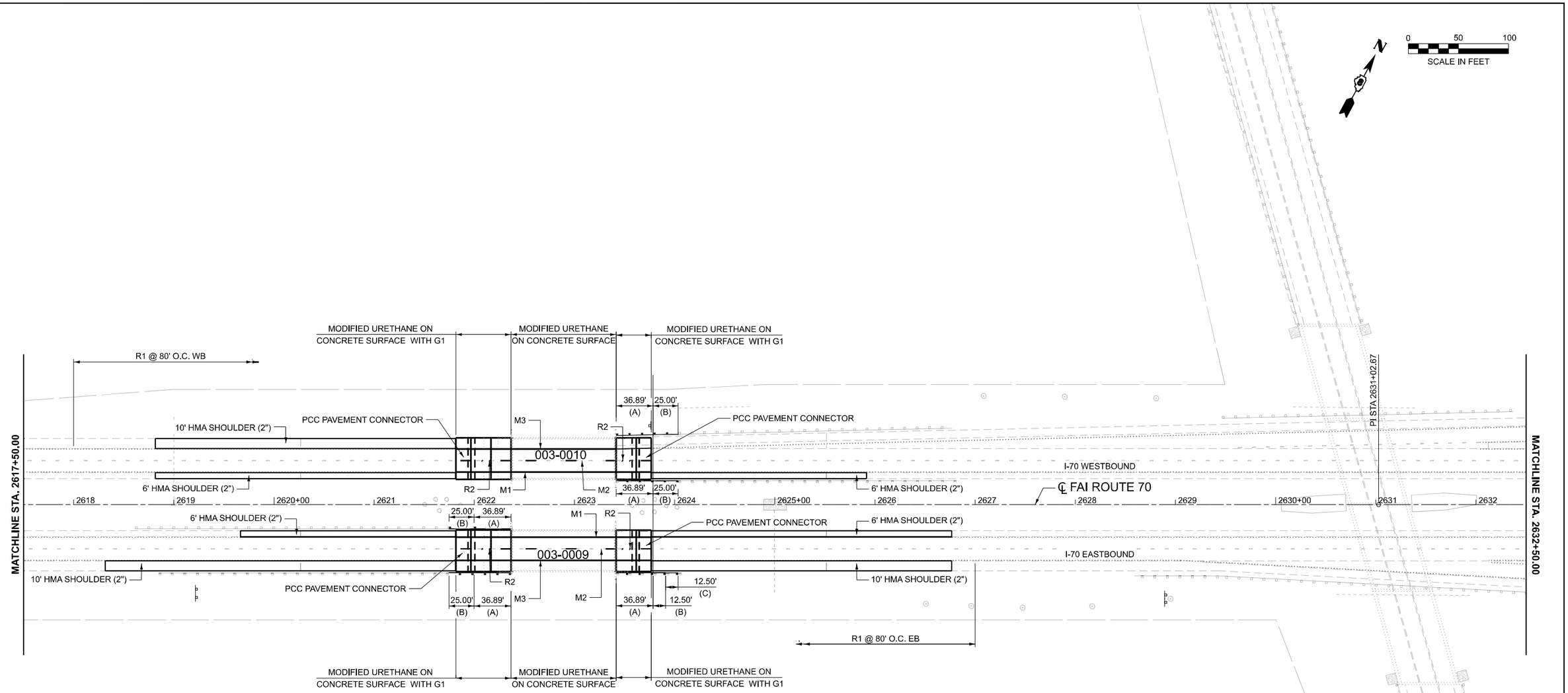

GUARDRAIL LEGEND

(A) PAY LIMITS FOR TRAFFIC BARRIER TERMINAL, TYPE 6

(B) PAY LIMITS FOR STEEL PLATE BEAM GUARDRAIL, TYPE A, 6 FOOT POSTS

(C) PAY LIMITS FOR TRAFFIC BARRIER TERMINAL, TYPE 2

PAVEMENT MARKING LEGEND

R1 REPLACEMENT REFLECTOR (DOUBLE 1-WAY CRYSTAL)
R2 RAISED REFLECTIVE PAVEMENT MARKER (DOUBLE 1-WAY CRYSTAL)

G1 GROOVING FOR RECESSED PAVEMENT MARK 7"

M1 MODIFIED URETHANE PAVEMENT MARK-LINE 6", YELLOW (SOLID)
M2 MODIFIED URETHANE PAVEMENT MARK-LINE 6", WHITE (10' DASH-30' SKIP)
M3 MODIFIED URETHANE PAVEMENT MARK-LINE 6", WHITE (SOLID)

MODEL: I70 - Plan 2 [Sheet]
FILE NAME: C:\SP\WHKS & COU\obs-Spring - Projects\IDOT D-8\9167 PTB 197-041\9167.14 I70 over Beaver Creek\CADD10.12\CADD Data\Sheets\D876T82-sht-plan.dgn

design firm no. 184001036
whks
engineers + planners + land surveyors

USER NAME = bjohnson	DESIGNED - GSJ/BJJ	REVISED -	
	DRAWN - GSJ/BJJ	REVISED -	
PLOT SCALE = 0.16666633 ' / in.	CHECKED - RKA	REVISED -	
PLOT DATE = 6/17/2024	DATE - RKA	REVISED -	

STATE OF ILLINOIS
DEPARTMENT OF TRANSPORTATION

PROPOSED ROADWAY PLAN
I-70 BRIDGE APPROACH REPLACEMENTS

SCALE: 1"=50' | SHEET 2 OF 3 SHEETS | STA. 2617+50.00 TO STA. 2632+50.00

FAI RTE.	SECTION	COUNTY	TOTAL SHEETS	SHEET NO.
70	3-4BI	BOND	31	14

CONTRACT NO. 76T82

ILLINOIS | FED. AID PROJECT

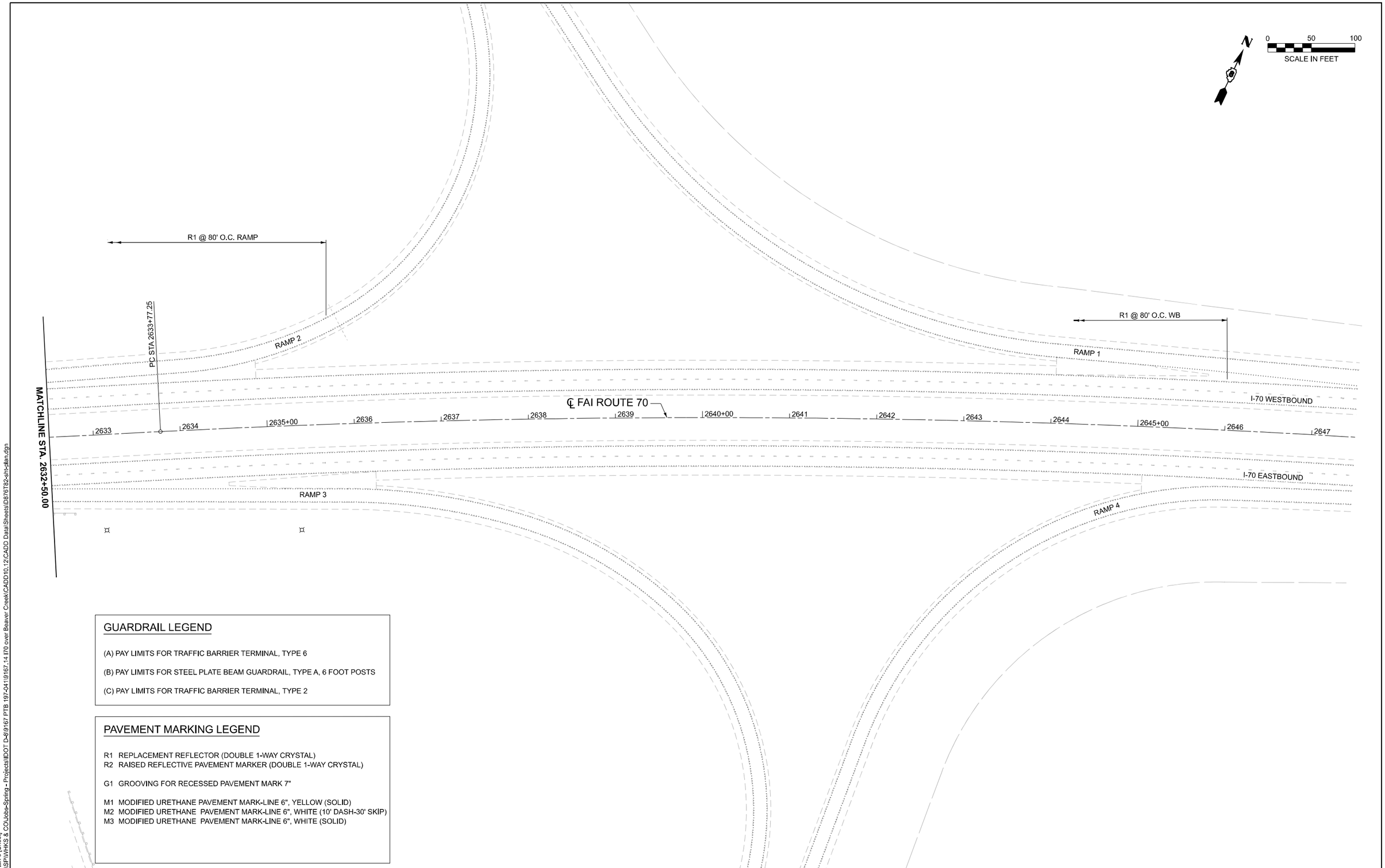

GUARDRAIL LEGEND

(A) PAY LIMITS FOR TRAFFIC BARRIER TERMINAL, TYPE 6

(B) PAY LIMITS FOR STEEL PLATE BEAM GUARDRAIL, TYPE A, 6 FOOT POSTS

(C) PAY LIMITS FOR TRAFFIC BARRIER TERMINAL, TYPE 2

PAVEMENT MARKING LEGEND

R1 REPLACEMENT REFLECTOR (DOUBLE 1-WAY CRYSTAL)
R2 RAISED REFLECTIVE PAVEMENT MARKER (DOUBLE 1-WAY CRYSTAL)

G1 GROOVING FOR RECESSED PAVEMENT MARK 7"

M1 MODIFIED URETHANE PAVEMENT MARK-LINE 6", YELLOW (SOLID)
M2 MODIFIED URETHANE PAVEMENT MARK-LINE 6", WHITE (10' DASH-30' SKIP)
M3 MODIFIED URETHANE PAVEMENT MARK-LINE 6", WHITE (SOLID)

MODEL: I70 - Plan 3 [Sheet]
FILE NAME: C:\SP\WHKS & CO\Jobs-Spring - Projects\IDOT D4\9167 PTB 197-041\9167.14 I70 over Beaver Creek\CADD10.12\CADD Data\Sheets\D876T82-sht-plan.dgn

design firm no. 184001036
whks
engineers + planners + land surveyors

USER NAME = bjohnson	DESIGNED - GSJ/BJJ	REVISED -	
	DRAWN - GSJ/BJJ	REVISED -	
PLOT SCALE = 0.16666633 ' / in.	CHECKED - RKA	REVISED -	
PLOT DATE = 6/17/2024	DATE - RKA	REVISED -	

STATE OF ILLINOIS
DEPARTMENT OF TRANSPORTATION

PROPOSED ROADWAY PLAN
I-70 BRIDGE APPROACH REPLACEMENTS

SCALE: 1"=50' | SHEET 3 OF 3 SHEETS | STA. 2632+50.00 TO STA. 2647+50.00

FAI RTE.	SECTION	COUNTY	TOTAL SHEETS	SHEET NO.
70	3-4BI	BOND	31	15
		CONTRACT NO. 76T82		
		ILLINOIS FED. AID PROJECT		

TRAFFIC CONTROL GENERAL NOTES

1. THE MAINTENANCE OF TRAFFIC PLANS SHALL SERVE AS A GUIDE FOR THE SAFE DIVERSION OF TRAFFIC DURING THE EXECUTION OF THIS CONTRACT. THE CONTRACTOR MAY MODIFY THE MAINTENANCE OF TRAFFIC PLANS TO MEET CONSTRUCTION NEEDS BUT NOT AT THE EXPENSE OF PUBLIC SAFETY OR CONVENIENCE. ANY CHANGES TO THE TRAFFIC CONTROL PLANS SHALL BE SUBMITTED TO THE ENGINEER FOR APPROVAL.

2. THE CONTRACTOR SHALL COVER ALL PAVEMENT MARKINGS THAT CONFLICT WITH THE FOLLOWING STAGE TEMPORARY PAVEMENT MARKING. THIS WORK WILL BE PAID FOR AT THE CONTRACT UNIT PRICE PER FOOT FOR PAVEMENT MARKING BLACKOUT TAPE, 7" AND 9".

3. ALL DRUMS, VERTICAL PANELS, AND BARRICADES ADJACENT TO THE EDGE OF THE TRAVELED WAY SHALL BE EQUIPPED WITH MONO-DIRECTIONAL STEADY BURNING LIGHTS.

4. FOUR (4) CHANGEABLE MESSAGE SIGNS SHALL BE REQUIRED FOR THIS PROJECT AND SHALL BE PLACED TWO (2) WEEKS PRIOR TO ANY LANE CLOSURE. THE CHANGEABLE MESSAGE SIGNS SHALL BE PLACED ON THE FOLLOWING ROUTES AT LOCATIONS DETERMINED BY THE ENGINEER:
   1- EASTBOUND I-70
   2 - WESTBOUND I-70
   3 - NORTHBOUND IL 127
   4 - SOUTHBOUND IL 127

5. SEE STRUCTURAL PLANS FOR ADDITIONAL BRIDGE STAGING INFORMATION.

MAINTENANCE OF TRAFFIC

PRESTAGE
REMOVE EXISTING HMA SHOULDER AND CONSTRUCT NEW SHOULDER FOR STAGE I TRAFFIC.

STAGE I
INSTALL TRAFFIC CONTROL FOR STAGE I AND SHIFT TRAFFIC AS SHOWN WITH THE APPLICABLE PORTIONS OF THE HIGHWAY STANDARDS USED.

REMOVE EXISTING APPROACH SLAB, PAVEMENT, AND SHOULDER. CONTRUCT THE PROPOSED APPROACH SLAB, PAVEMENT CONNECTOR AND SHOULDER.

TRAFFIC CONTROL DETAILS (SIGN, PAVEMENT MARKINGS, ETC.) NOT SHOWN IN THESE STAGE CONSTRUCTION DETAILS SHALL BE AS PER THE HIGHWAY STANDARDS LISTED ABOVE.

STAGE II
RELOCATE TRAFFIC CONTROL FOR STAGE II AND SHIFT TRAFFIC AS SHOWN WITH THE APPLICABLE PORTIONS OF THE HIGHWAY STANDARDS USED.

REMOVE EXISTING APPROACH SLAB AND PAVEMENT. CONTRUCT THE PROPOSED APPROACH SLAB AND PAVEMENT CONNECTOR.

TRAFFIC CONTROL DETAILS (SIGN, PAVEMENT MARKINGS, ETC.) NOT SHOWN IN THESE STAGE CONSTRUCTION DETAILS SHALL BE AS PER THE HIGHWAY STANDARDS LISTED ABOVE.

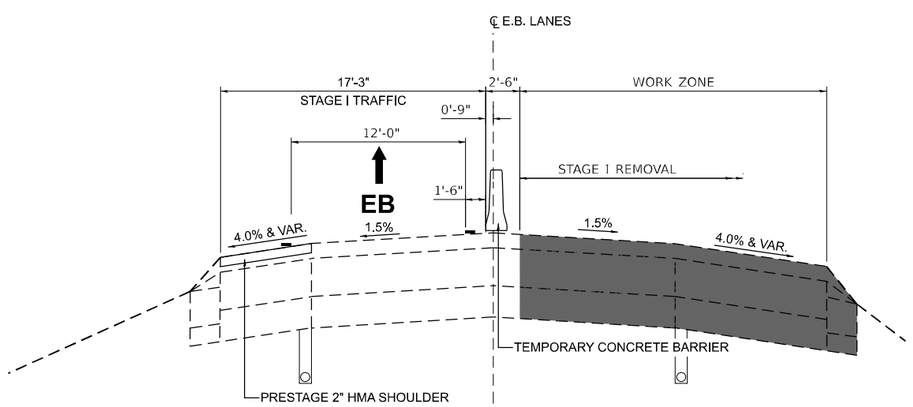

MAINTENANCE OF TRAFFIC - STAGE I
(I-70 EASTBOUND)

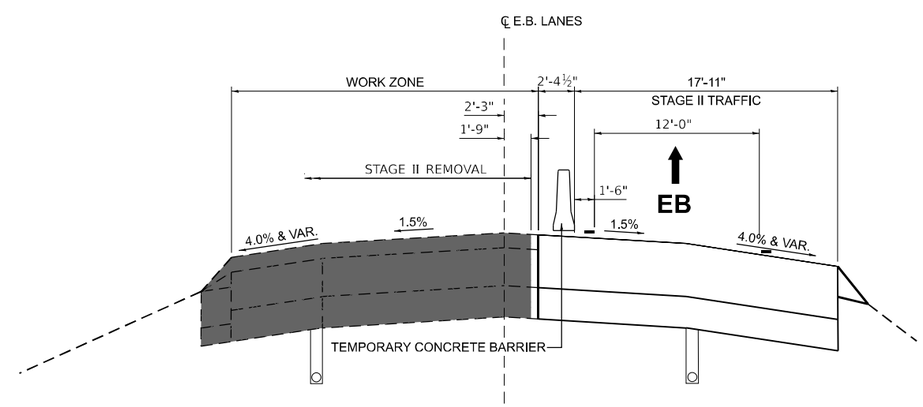

MAINTENANCE OF TRAFFIC - STAGE II
(I-70 EASTBOUND)

MODEL: GEN-1 [Sheet]
FILE NAME: C:\SP\WHKS & CO\Jobs-Spring - Projects\IDOT D-8/9/67 PTB 197-041\9167.14 I70 over Beaver Creek\CADD10.12\CADD Data\Sheets\D876T82-sht-genmote-staging.dgn

design firm no. 184001036 whks engineers + planners + land surveyors	USER NAME = bjohnson	DESIGNED - GSJ/BJJ	REVISED -	STATE OF ILLINOIS DEPARTMENT OF TRANSPORTATION	TRAFFIC CONTROL GENERAL NOTES I-70 BRIDGE APPROACH REPLACEMENTS
		DRAWN - GSJ/BJJ	REVISED -		
	PLOT SCALE = 0.16666633 ' / in.	CHECKED - RKA	REVISED -		
	PLOT DATE = 6/17/2024	DATE - 3/21/2024	REVISED -		SCALE: 1"=50' SHEET 1 OF 6 SHEETS STA. TO STA.

FAI RTE.	SECTION	COUNTY	TOTAL SHEETS	SHEET NO.
70	3-4BI	BOND	31	16
		CONTRACT NO. 76T82		
	ILLINOIS	FED. AID PROJECT		

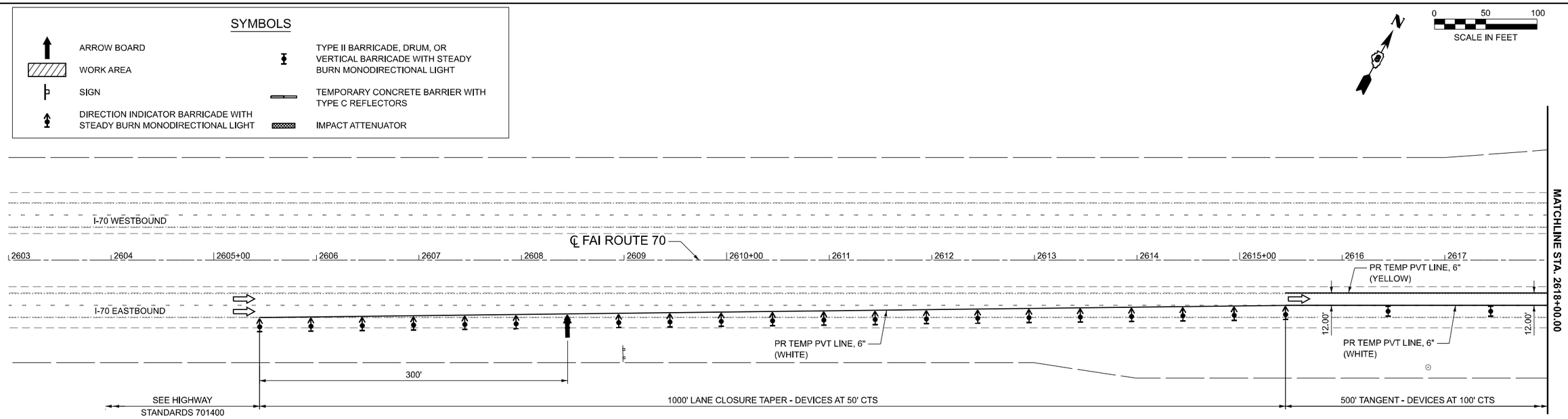

MAINTENANCE OF TRAFFIC - STAGE I
(I-70 EASTBOUND)

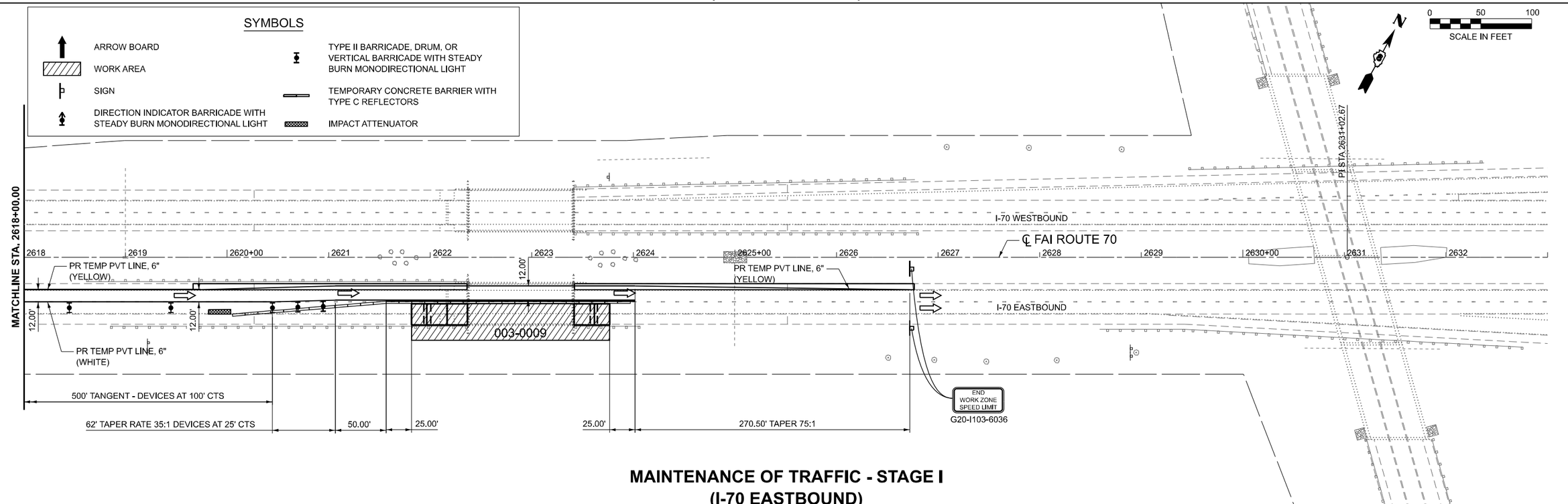

MAINTENANCE OF TRAFFIC - STAGE I
(I-70 EASTBOUND)

MODEL: 0009 - Plan 1 [Sheet]
FILE NAME: C:\SP\WHKS & CO\Jobs-Spring - Projects\IDOT D-89167 PTB 197-041\9167.14 I70 over Beaver Creek\CADD10.12\CADD Data\Sheets\D876T82-sht-staging1-0009.dgn

design firm no. 184001036
whks
engineers + planners + land surveyors

USER NAME = bjohnson	DESIGNED - GSJ/BJJ	REVISED -	
	DRAWN - GSJ/BJJ	REVISED -	
PLOT SCALE = 0.16666633 ' / in.	CHECKED - RKA	REVISED -	
PLOT DATE = 6/17/2024	DATE - 3/21/2024	REVISED -	

STATE OF ILLINOIS
DEPARTMENT OF TRANSPORTATION

SUGGESTED STAGES OF CONSTRUCTION & TRAFFIC CONTROL
I-70 BRIDGE APPROACH REPLACEMENTS

SCALE: 1"=50' | SHEET 2 OF 6 SHEETS | STA. 2603+00.00 TO STA. 2633+00.00

FAI RTE.	SECTION	COUNTY	TOTAL SHEETS	SHEET NO.
70	3-4BI	BOND	31	17

CONTRACT NO. 76T82

ILLINOIS | FED. AID PROJECT

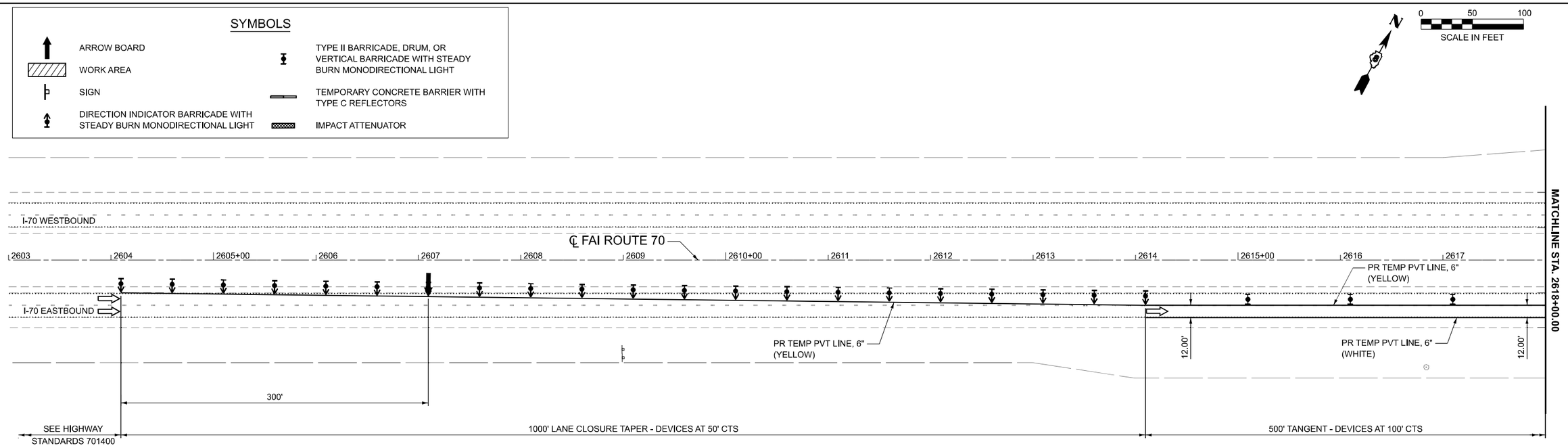

MAINTENANCE OF TRAFFIC - STAGE II
(I-70 EASTBOUND)

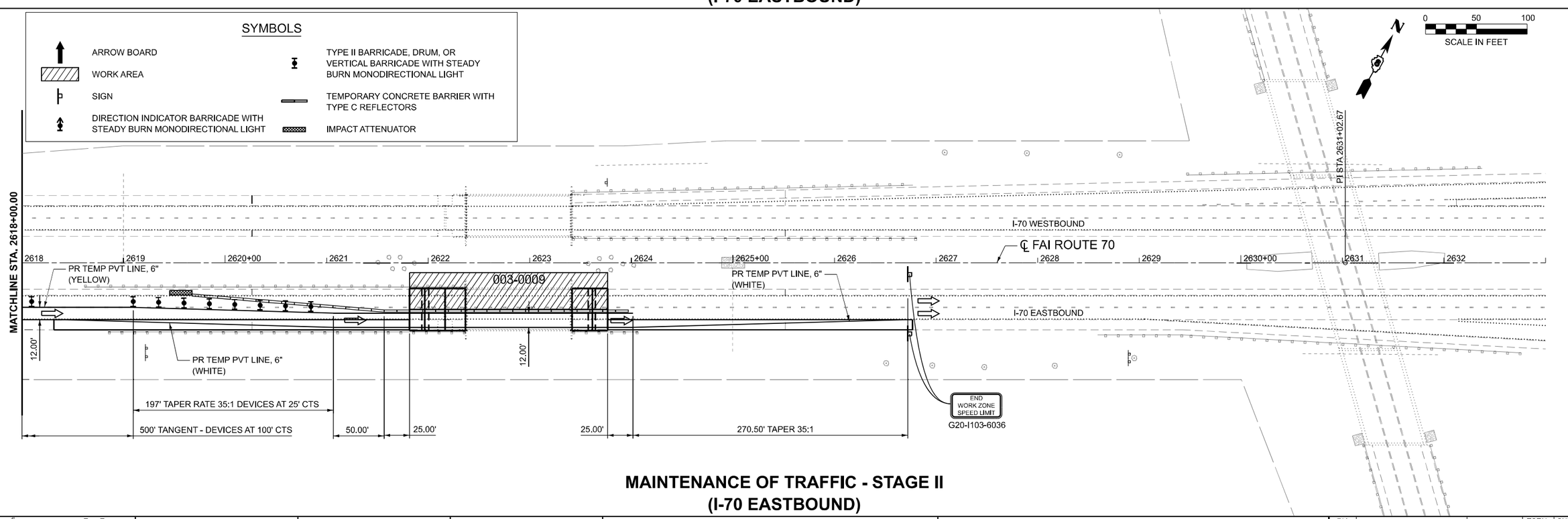

MAINTENANCE OF TRAFFIC - STAGE II
(I-70 EASTBOUND)

MODEL: 0009 - Plan 1 [Sheet]
FILE NAME: C:\SP\WHKS & CO\Jobs-Spring - Projects\IDOT D-89167 PTB 197-041\9167.14 I70 over Beaver Creek\CADD10.12\CADD Data\Sheets\D876T82-sht-staging2-0009.dgn

design firm no. 184001036
whks
engineers + planners + land surveyors

USER NAME = bjohnson	DESIGNED - GSJ/BJJ	REVISED -	
	DRAWN - GSJ/BJJ	REVISED -	
PLOT SCALE = 0.16666633 ' / in.	CHECKED - RKA	REVISED -	
PLOT DATE = 6/17/2024	DATE - 3/21/2024	REVISED -	

STATE OF ILLINOIS
DEPARTMENT OF TRANSPORTATION

SUGGESTED STAGES OF CONSTRUCTION & TRAFFIC CONTROL
I-70 BRIDGE APPROACH REPLACEMENTS

SCALE: 1"=50' | SHEET 3 OF 6 SHEETS | STA. 2603+00.00 TO STA. 2633+00.00

FAI RTE.	SECTION	COUNTY	TOTAL SHEETS	SHEET NO.
70	3-4BI	BOND	31	18

CONTRACT NO. 76T82

ILLINOIS | FED. AID PROJECT

TRAFFIC CONTROL GENERAL NOTES

1. THE MAINTENANCE OF TRAFFIC PLANS SHALL SERVE AS A GUIDE FOR THE SAFE DIVERSION OF TRAFFIC DURING THE EXECUTION OF THIS CONTRACT. THE CONTRACTOR MAY MODIFY THE MAINTENANCE OF TRAFFIC PLANS TO MEET CONSTRUCTION NEEDS BUT NOT AT THE EXPENSE OF PUBLIC SAFETY OR CONVENIENCE. ANY CHANGES TO THE TRAFFIC CONTROL PLANS SHALL BE SUBMITTED TO THE ENGINEER FOR APPROVAL.

2. THE CONTRACTOR SHALL COVER ALL PAVEMENT MARKINGS THAT CONFLICT WITH THE FOLLOWING STAGE TEMPORARY PAVEMENT MARKING. THIS WORK WILL BE PAID FOR AT THE CONTRACT UNIT PRICE PER FOOT FOR PAVEMENT MARKING BLACKOUT TAPE, 7" AND 9".

3. ALL DRUMS, VERTICAL PANELS, AND BARRICADES ADJACENT TO THE EDGE OF THE TRAVELED WAY SHALL BE EQUIPPED WITH MONO-DIRECTIONAL STEADY BURNING LIGHTS.

4. FOUR (4) CHANGEABLE MESSAGE SIGNS SHALL BE REQUIRED FOR THIS PROJECT AND SHALL BE PLACED TWO (2) WEEKS PRIOR TO ANY LANE CLOSURE. THE CHANGEABLE MESSAGE SIGNS SHALL BE PLACED ON THE FOLLOWING ROUTES AT LOCATIONS DETERMINED BY THE ENGINEER:
   1 - EASTBOUND I-70
   2 - WESTBOUND I-70
   3 - NORTHBOUND IL 127
   4 - SOUTHBOUND IL 127

5. SEE STRUCTURAL PLANS FOR ADDITIONAL BRIDGE STAGING INFORMATION.

MAINTENANCE OF TRAFFIC

PRESTAGE
REMOVE EXISTING HMA SHOULDER AND CONSTRUCT NEW SHOULDER FOR STAGE I TRAFFIC.

STAGE I
INSTALL TRAFFIC CONTROL FOR STAGE I AND SHIFT TRAFFIC AS SHOWN WITH THE APPLICABLE PORTIONS OF THE HIGHWAY STANDARDS USED.

REMOVE EXISTING APPROACH SLAB, PAVEMENT, AND SHOULDER. CONTRUCT THE PROPOSED APPROACH SLAB, PAVEMENT CONNECTOR AND SHOULDER.

TRAFFIC CONTROL DETAILS (SIGN, PAVEMENT MARKINGS, ETC.) NOT SHOWN IN THESE STAGE CONSTRUCTION DETAILS SHALL BE AS PER THE HIGHWAY STANDARDS LISTED ABOVE.

STAGE II
RELOCATE TRAFFIC CONTROL FOR STAGE II AND SHIFT TRAFFIC AS SHOWN WITH THE APPLICABLE PORTIONS OF THE HIGHWAY STANDARDS USED.

REMOVE EXISTING APPROACH SLAB AND PAVEMENT. CONTRUCT THE PROPOSED APPROACH SLAB AND PAVEMENT CONNECTOR.

TRAFFIC CONTROL DETAILS (SIGN, PAVEMENT MARKINGS, ETC.) NOT SHOWN IN THESE STAGE CONSTRUCTION DETAILS SHALL BE AS PER THE HIGHWAY STANDARDS LISTED ABOVE.

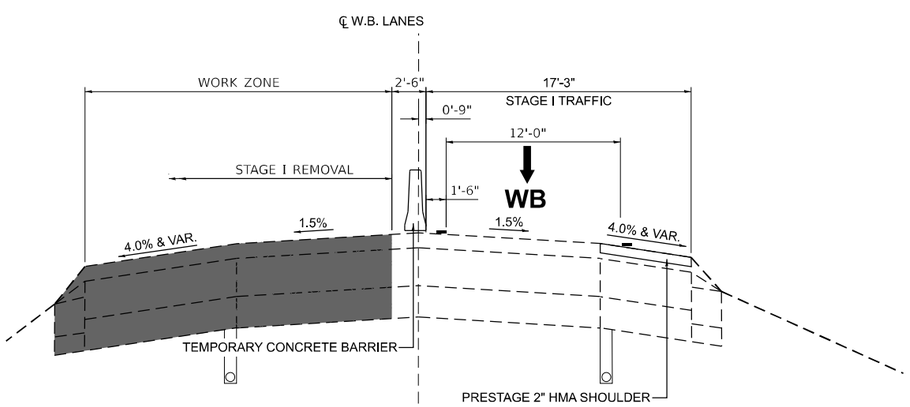

MAINTENANCE OF TRAFFIC - STAGE I
(I-70 WESTBOUND)

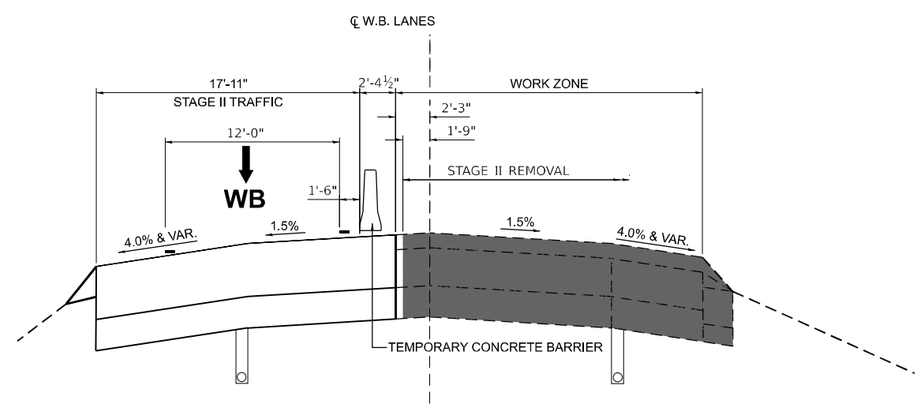

MAINTENANCE OF TRAFFIC - STAGE II
(I-70 WESTBOUND)

MODEL: GEN-2 [Sheet]
FILE NAME: C:\SP\WHKS & CO\Jobs-Spring - Projects\IDOT D-8/9/67 PTB 197-041\9167.14 I70 over Beaver Creek\CADD10.12\CADD Data\Sheets\D876T82-sht-gemote-staging.dgn

design firm no. 184001036 whks engineers + planners + land surveyors	USER NAME = bjohnson	DESIGNED - GSJ/BJJ	REVISED -	STATE OF ILLINOIS DEPARTMENT OF TRANSPORTATION	SUGGESTED STAGES OF CONSTRUCTION & TRAFFIC CONTROL I-70 BRIDGE APPROACH REPLACEMENTS
		DRAWN - GSJ/BJJ	REVISED -		
	PLOT SCALE = 0.16666633 ' / in.	CHECKED - RKA	REVISED -		
	PLOT DATE = 6/17/2024	DATE - 3/21/2024	REVISED -		SCALE: 1"=50' SHEET 4 OF 6 SHEETS STA. TO STA.

FAI RTE.	SECTION	COUNTY	TOTAL SHEETS	SHEET NO.
70	3-4BI	BOND	31	19
		CONTRACT NO. 76T82		
		ILLINOIS FED. AID PROJECT		

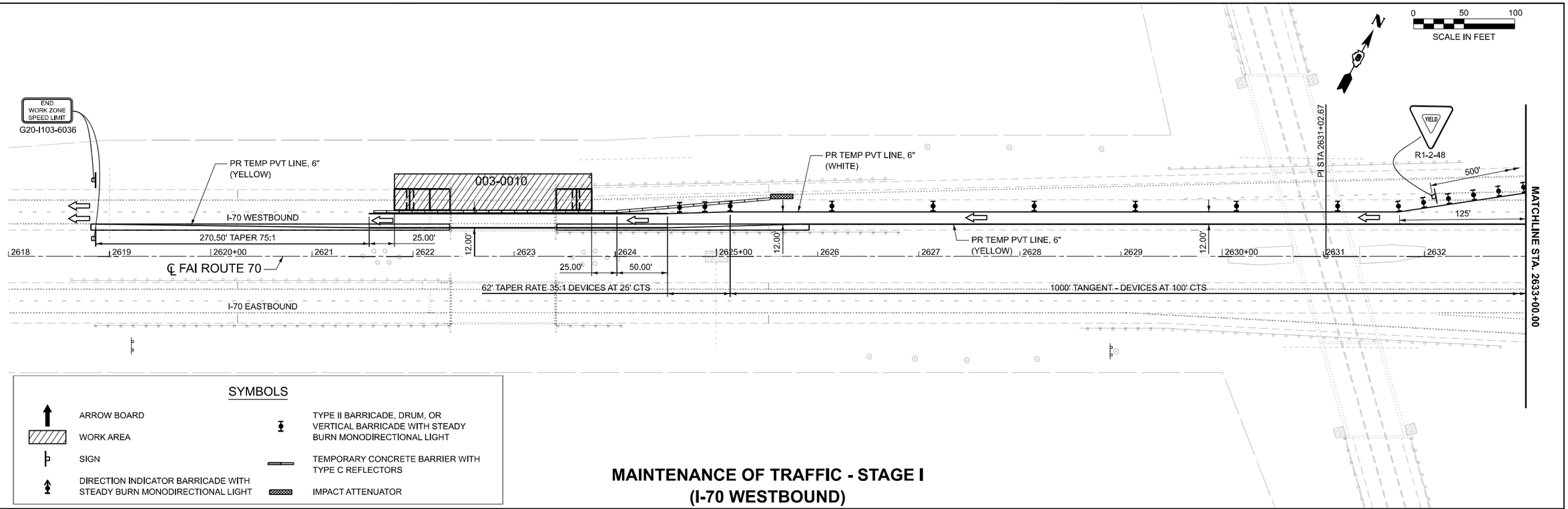

MAINTENANCE OF TRAFFIC - STAGE I
(I-70 WESTBOUND)

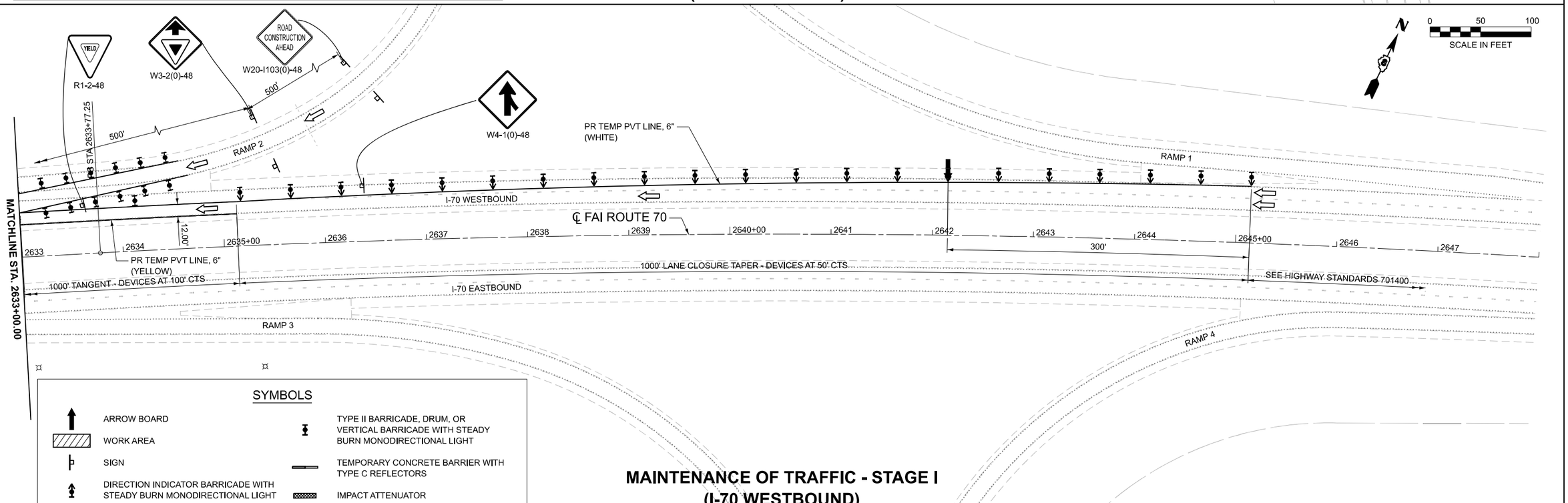

MAINTENANCE OF TRAFFIC - STAGE I
(I-70 WESTBOUND)

MODEL: 703 - 0010 [Sheet]
FILE NAME: C:\SP\WHKS & CO\Jobs-Spring - Projects\IDOT D-89167 PTB 197-041\9167.14 I70 over Beaver Creek\CADD10.12\CADD Data\Sheets\D876T82-sht-staging1-0010.dgn

design firm no. 184001036
whks
engineers + planners + land surveyors

USER NAME = bjohnson	DESIGNED - GSJ/BJJ	REVISED -	
	DRAWN - GSJ/BJJ	REVISED -	
PLOT SCALE = 0.16666633 ' / in.	CHECKED - RKA	REVISED -	
PLOT DATE = 6/19/2024	DATE - 3/21/2024	REVISED -	

STATE OF ILLINOIS
DEPARTMENT OF TRANSPORTATION

SUGGESTED STAGES OF CONSTRUCTION & TRAFFIC CONTROL
I-70 BRIDGE APPROACH REPLACEMENTS

SCALE: 1"=50' | SHEET 5 OF 6 SHEETS | STA. 2618+00.00 TO STA. 2648+00.00

FAI RTE.	SECTION	COUNTY	TOTAL SHEETS	SHEET NO.
70	3-4BI	BOND	31	20

CONTRACT NO. 76T82

ILLINOIS | FED. AID PROJECT

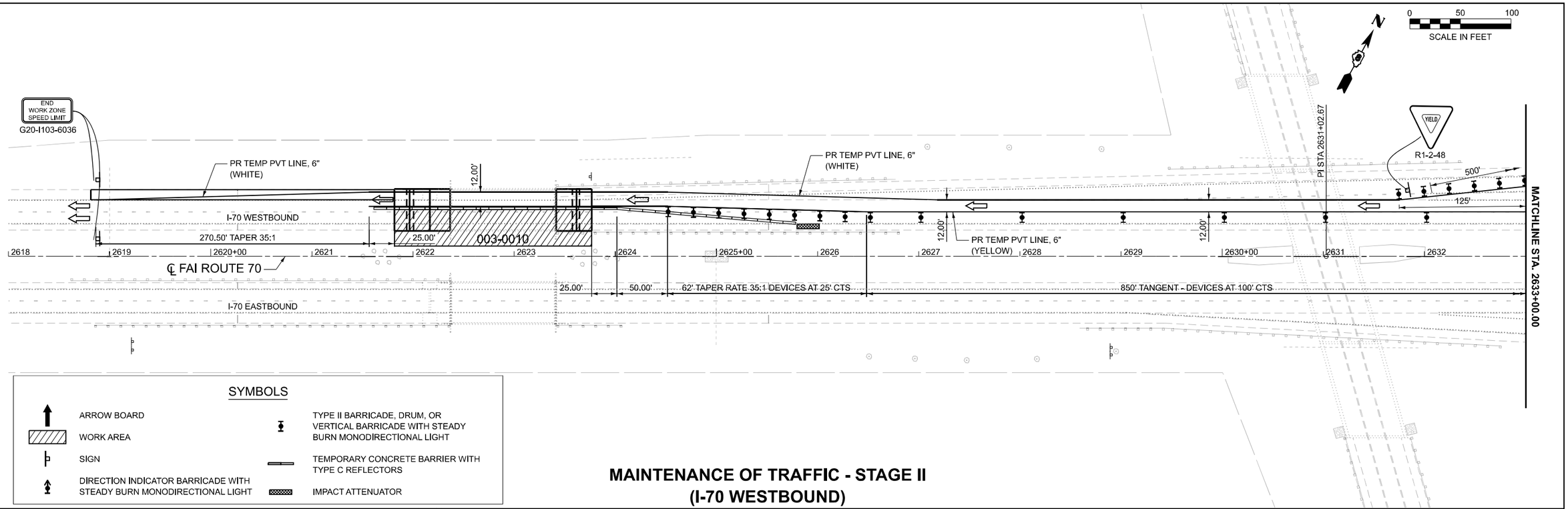

MAINTENANCE OF TRAFFIC - STAGE II
(I-70 WESTBOUND)

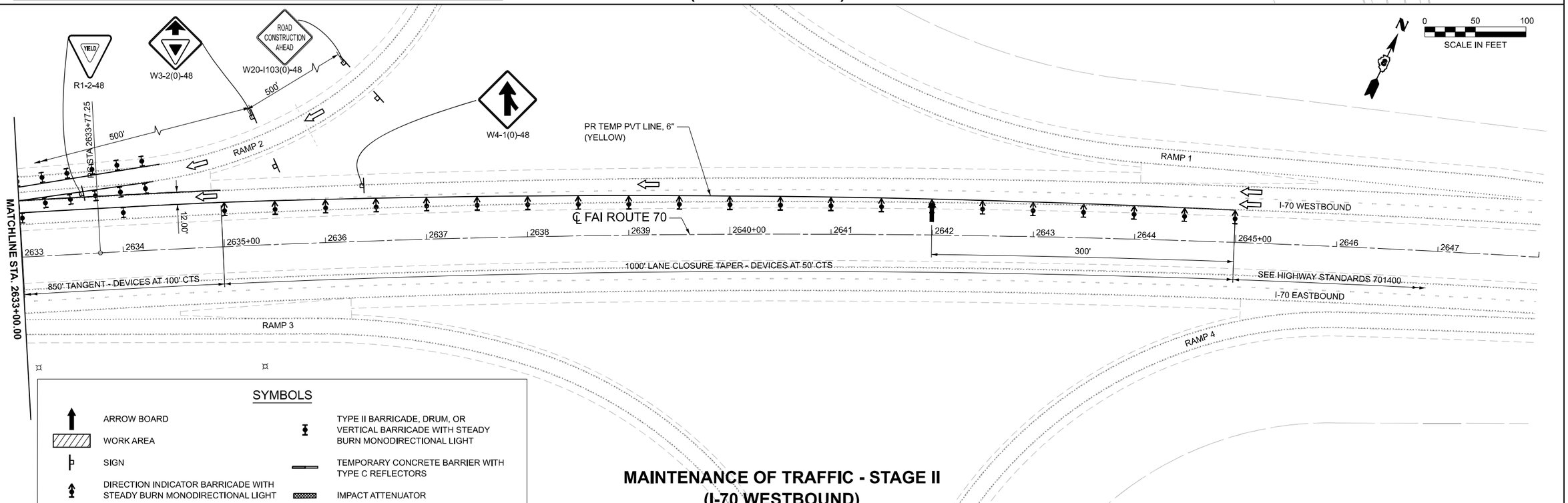

MAINTENANCE OF TRAFFIC - STAGE II
(I-70 WESTBOUND)

MODEL: 0010 - 0010 [Sheet]
FILE NAME: C:\SP\WHKS & CO\Jobs-Spring - Projects\IDOT D-89167 PTB 197-041\9167.14 I70 over Beaver Creek\CADD10.12\CADD Data\Sheets\D876T82-sht-staging2-0010.dgn

design firm no. 184001036
whks
engineers + planners + land surveyors

USER NAME = bjohnson	DESIGNED - GSJ/BJJ	REVISED -	
	DRAWN - GSJ/BJJ	REVISED -	
PLOT SCALE = 0.16666633 ' / in.	CHECKED - RKA	REVISED -	
PLOT DATE = 6/17/2024	DATE - 3/21/2024	REVISED -	

STATE OF ILLINOIS
DEPARTMENT OF TRANSPORTATION

SUGGESTED STAGES OF CONSTRUCTION & TRAFFIC CONTROL
I-70 BRIDGE APPROACH REPLACEMENTS

SCALE: 1"=50' | SHEET 6 OF 6 SHEETS | STA. 2618+00.00 TO STA. 2648+00.00

FAI RTE.	SECTION	COUNTY	TOTAL SHEETS	SHEET NO.
70	3-4BI	BOND	31	21

CONTRACT NO. 76T82

ILLINOIS | FED. AID PROJECT

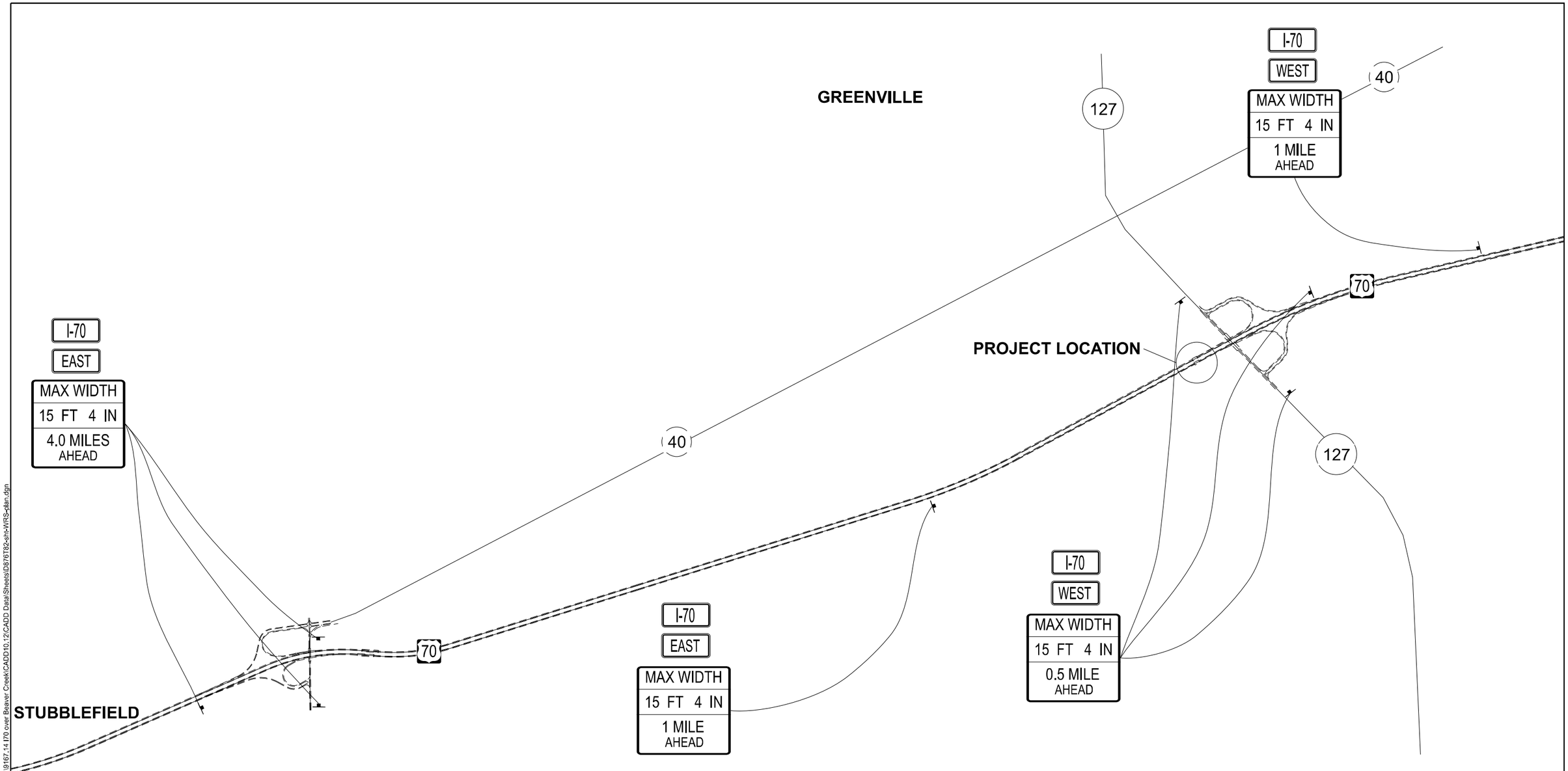

SIGNS REQUIRED

MAX WIDTH 15 FT 4 IN 0.5 MILES AHEAD	MAX WIDTH 15 FT 4 IN 1.0 MILES AHEAD	MAX WIDTH 15 FT 4 IN 4.0 MILES AHEAD	I-70	EAST
(3)	(2)	(4)	(8)	(4)
				WEST
				(4)

DUDLEYVILLE

N

MODEL: WRS-01 [Sheet]
FILE NAME: C:\SP\WHKS & CO\Jobs-Spring - Projects\IDOT D-9\9167 PTB 197-041\9167-14 I70 over Beaver Creek\CADD10.12\CADD Data\Sheets\D76T82-sht-WRS-plan.dgn

design firm no. 184001036 whks engineers + planners + land surveyors

USER NAME = bjohnson	DESIGNED - GSJ/BJJ	REVISED -	STATE OF ILLINOIS DEPARTMENT OF TRANSPORTATION	WIDTH RESTRICTION SIGNING I-70 BRIDGE APPROACH REPLACEMENTS	
	DRAWN - GSJ/BJJ	REVISED -			
PLOT SCALE = 0.16666633 ' / in.	CHECKED - RKA	REVISED -			
PLOT DATE = 6/14/2024	DATE - 3/21/2024	REVISED -		SCALE: SHEET 1 OF 1 SHEETS STA. TO STA.	

FAI RTE.	SECTION	COUNTY	TOTAL SHEETS	SHEET NO.
70	3-4BI	BOND	31	22
		CONTRACT NO. 76T82		
		ILLINOIS FED. AID PROJECT		

Benchmark: None

Existing Structure: S.N. 003-0009 & 003-0010 were originally constructed in 1966 as part of F.A.I. Rte. 70, Section 3-4B, Station 2622+90. The 3-span slab bridge structures each have an out-to-out width of 42'-4" and back-to-back abutment length of 106'-0". The superstructure is supported by solid wall piers and pile-bent abutments on concrete piles. The approach slabs, footings, and joints are to be removed and replaced. Stage Construction will be utilized.

No Salvage

INDEX OF SHEETS

DESIGN SPECIFICATIONS

2002 AASHTO Standard Specifications for Highway Bridges (17th Edition)

DESIGN STRESSES

FIELD UNITS

fy = 60,000 psi (Reinforcement)

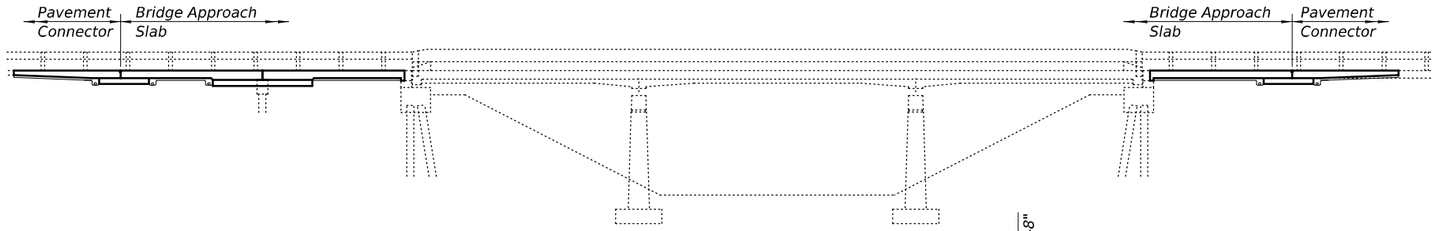

ELEVATION

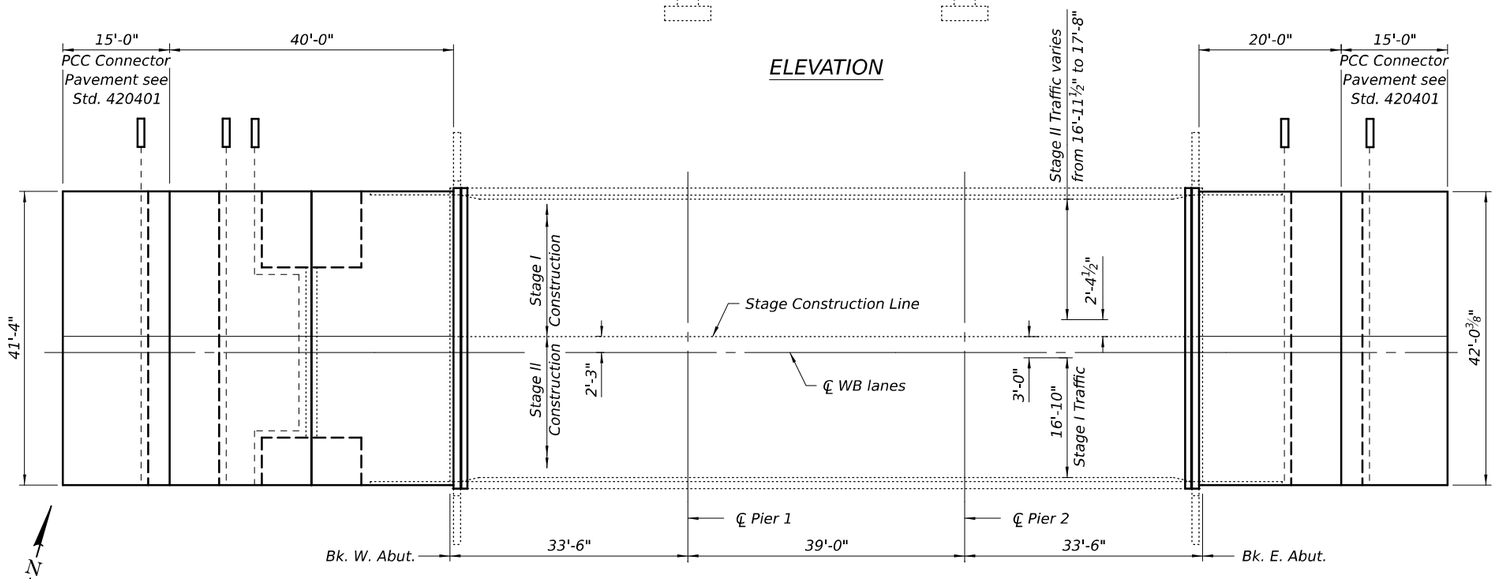

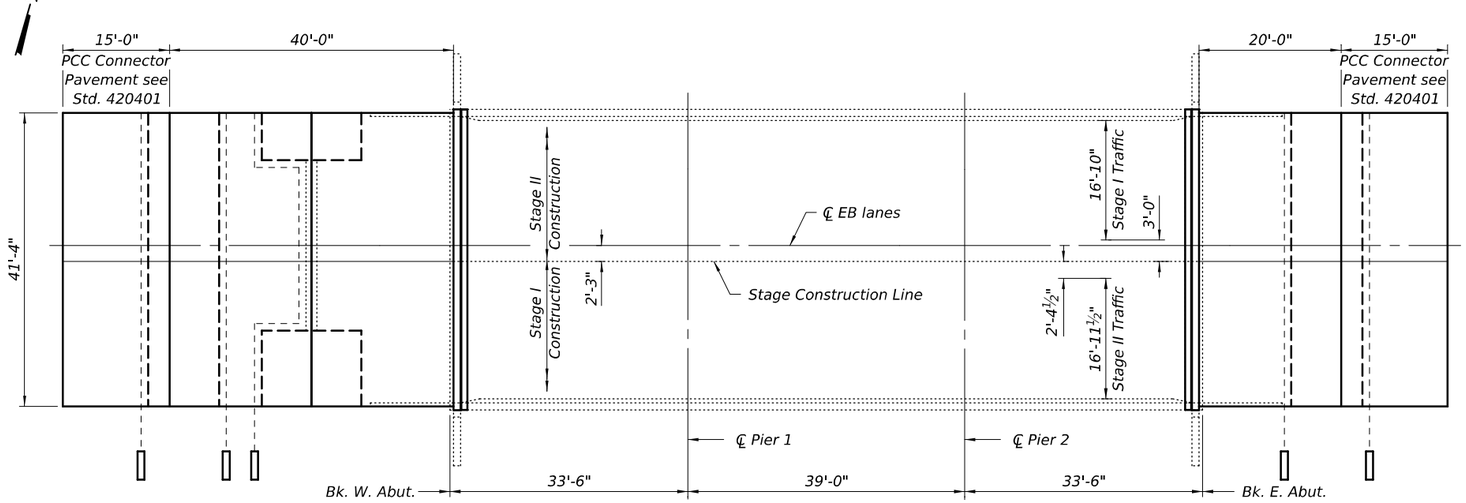

PLAN

GENERAL NOTES

1. Reinforcement bars designated (E) shall be epoxy coated.
2. Plan dimensions and details relative to the existing structure have been taken from existing plans and are subject to nominal construction variations. The Contractor shall field verify existing dimensions and details affecting new construction and make necessary approved adjustments prior to construction or ordering of materials. Such variations shall not be cause for additional compensation for a change in scope of the work, however, the Contractor will be paid for the quantity actually furnished at the unit price bid for the work.
3. Existing reinforcement bars extending into the removal area shall be cleaned, straightened and incorporated into the new construction. Any existing reinforcement bars intended for reuse and damaged during the concrete removal operations shall be repaired or replaced using an approved bar splicer or anchorage system to the satisfaction of the Engineer. Cost included with Concrete Removal.
4. Prior to commencing approach slab removal, the Contractor shall survey the removal areas and adjacent remaining elements to establish a profile and cross slopes for the proposed approach slab and PCC pavement connector that results in a smooth transition between the existing bridge deck and pavement. The proposed profile and cross slopes shall be submitted to the Engineer for review and approval. Cost included with Approach Slab Removal.

TOTAL BILL OF MATERIAL

Item	Unit	Super	Sub	Total
Porous Granular Embankment	Cu. Yd.		181	181
Geotechnical Fabric for Ground Stabilization	Sq. Yd.		815	815
Concrete Removal	Cu. Yd.	13.4		13.4
Concrete Structures	Cu. Yd.		66.3	66.3
Concrete Superstructure	Cu. Yd.	13.4		13.4
Bridge Deck Grooving	Sq. Yd.		513	513
Protective Coat	Sq. Yd.		594	594
Concrete Superstructure (Approach Slab)	Cu. Yd.	211.3		211.3
Reinforcement Bars, Epoxy Coated	Pound	45,890	11,730	57,620
Bar Splicers	Each	336	160	496
Preformed Joint Strip Seal	Foot	165		165
Concrete Headwalls for Pipe Drains	Each		10	10
Pipe Underdrains for Structures 4"	Foot		503	503
Approach Slab Removal	Sq. Yd.		676.7	676.7
Triaxial Geogrid Reinforcement, Type I	Sq. Yd.		815	815

LICENSED STRUCTURAL ENGINEER
CORY W. CHAMBERLAIN
081-005882
STATE OF ILLINOIS

Cory W. Chamberlain 7-17-2024

Expires: 11/30/2024

GENERAL PLAN AND ELEVATION
FAI 70 OVER BEAVER CREEK
SECTION 3-4B1
BOND COUNTY
STRUCTURE NO. 003-0009 (EB)
STRUCTURE NO. 003-0010 (WB)

FILE NAME: C:\SPWORKS & CO\Jobs-Spring - Projects\IDOT D-89167 PTB 197-041\9167_14 I70 over Beaver Creek\CADD10.12\CADD Data\B-Edge\003_0009.dgn

design firm no. 184001036 whks engineers + planners + land surveyors	USER NAME = karte	DESIGNED - JLM	REVISED -	ILLINOIS DEPARTMENT OF TRANSPORTATION	STRUCTURE NO. 003–0009 & 003–0010
		CHECKED - SBC	REVISED -		
	PLOT DATE = 8/9/2024	DRAWN - DLH	REVISED -		
	PLOT DATE = 7:32:24 AM	CHECKED - JLM	REVISED -		SHEET 1 OF 9 SHEETS

FAI RTE.	SECTION	COUNTY	TOTAL SHEETS	SHEET NO.
70	3-4B1	BOND	31	23
		CONTRACT NO. 76T82		
		ILLINOIS	FED. AID PROJECT	

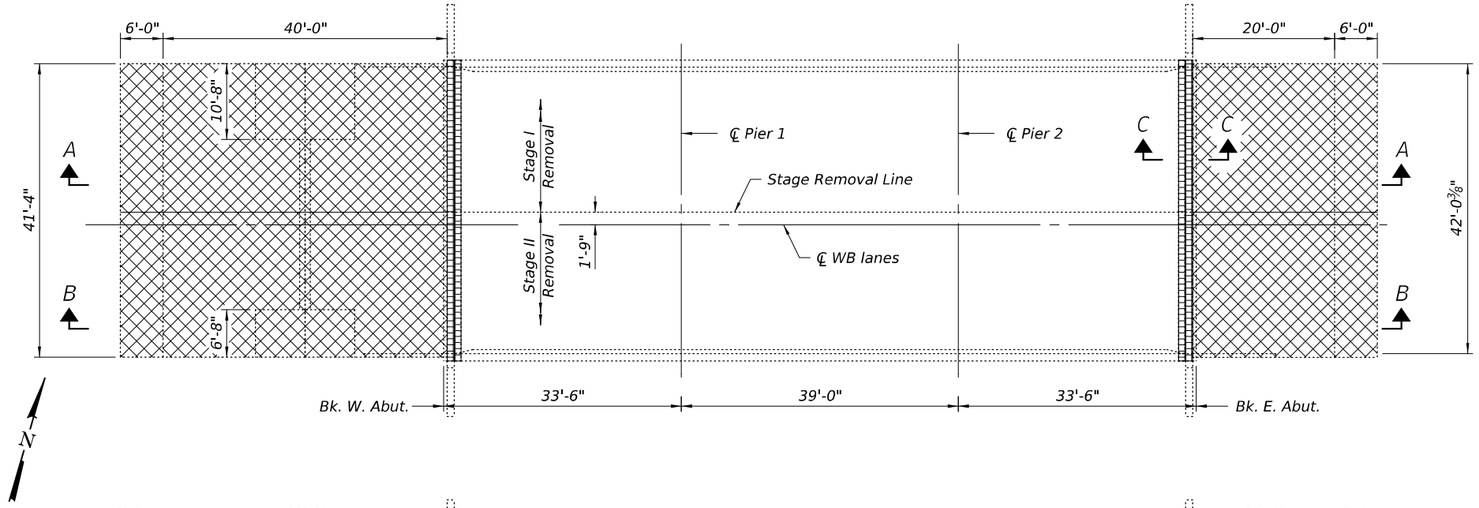

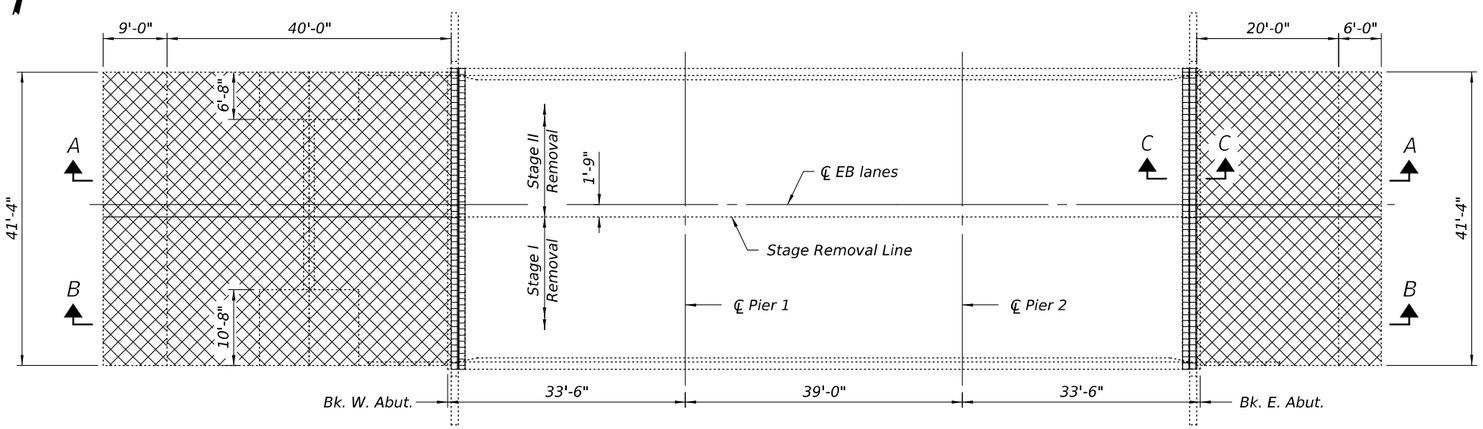

PLAN

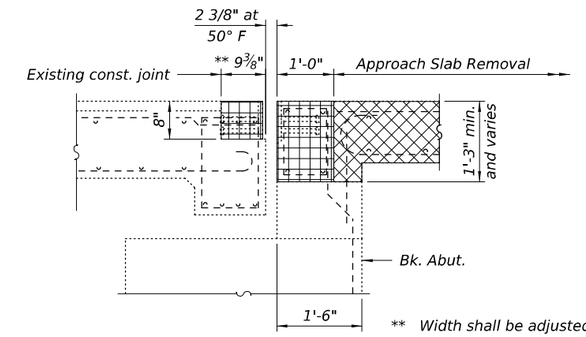

** Width shall be adjusted in field to remove concrete to existing construction joint.

SECTION C-C

(E. abutment shown, W. abutment similar)

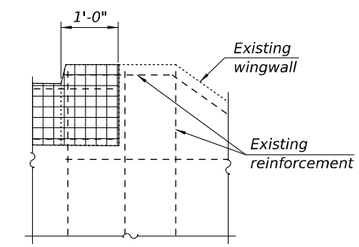

REMOVAL AT WINGWALL

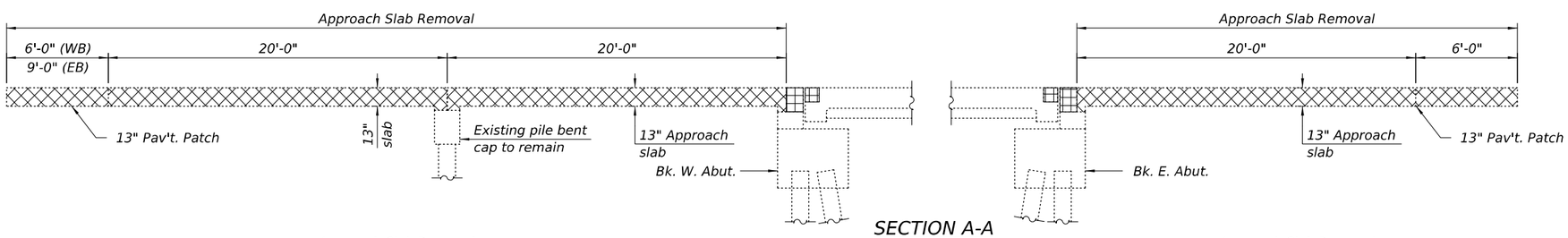

SECTION A-A

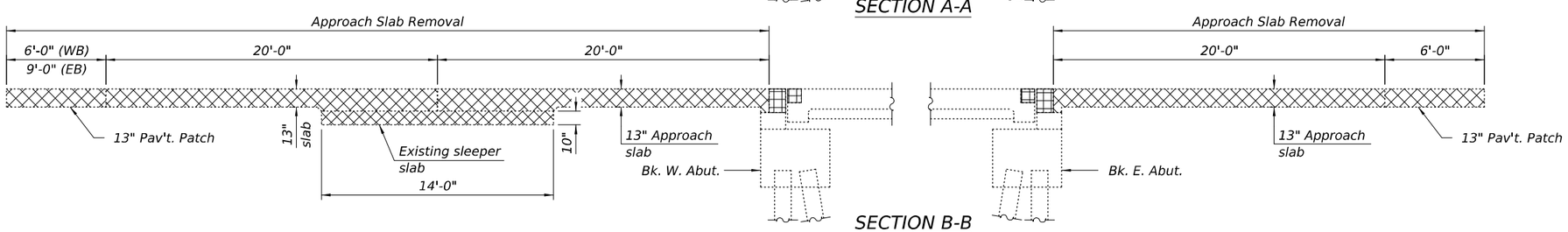

SECTION B-B

LEGEND

Approach Slab Removal

Concrete Removal

FILE NAME: C:\SPWHKS & CO\bbs-Spring - Projects\IDOT D-89367 PTB 197-041\9367_14 I70 over Beaver Creek\CADD10.12\CADD Data\Bridge\003_0009.dgn

design firm no. 184001036 whks engineers + planners + land surveyors	USER NAME = karte	DESIGNED - JLM	REVISED -	ILLINOIS DEPARTMENT OF TRANSPORTATION	REMOVAL DETAILS STRUCTURE NO. 003–0009 & 003–0010	FAI RTE.	SECTION	COUNTY	TOTAL SHEETS	SHEET NO.
		CHECKED - SBC	REVISED -			70	3-4BI	BOND	31	24
	PLOT DATE = 8/8/2024	DRAWN - DLH	REVISED -			CONTRACT NO. 76T82				
	PLOT DATE = 7:50:13 AM	CHECKED - JLM	REVISED -		SHEET 2 OF 9 SHEETS	ILLINOIS	FED. AID PROJECT			

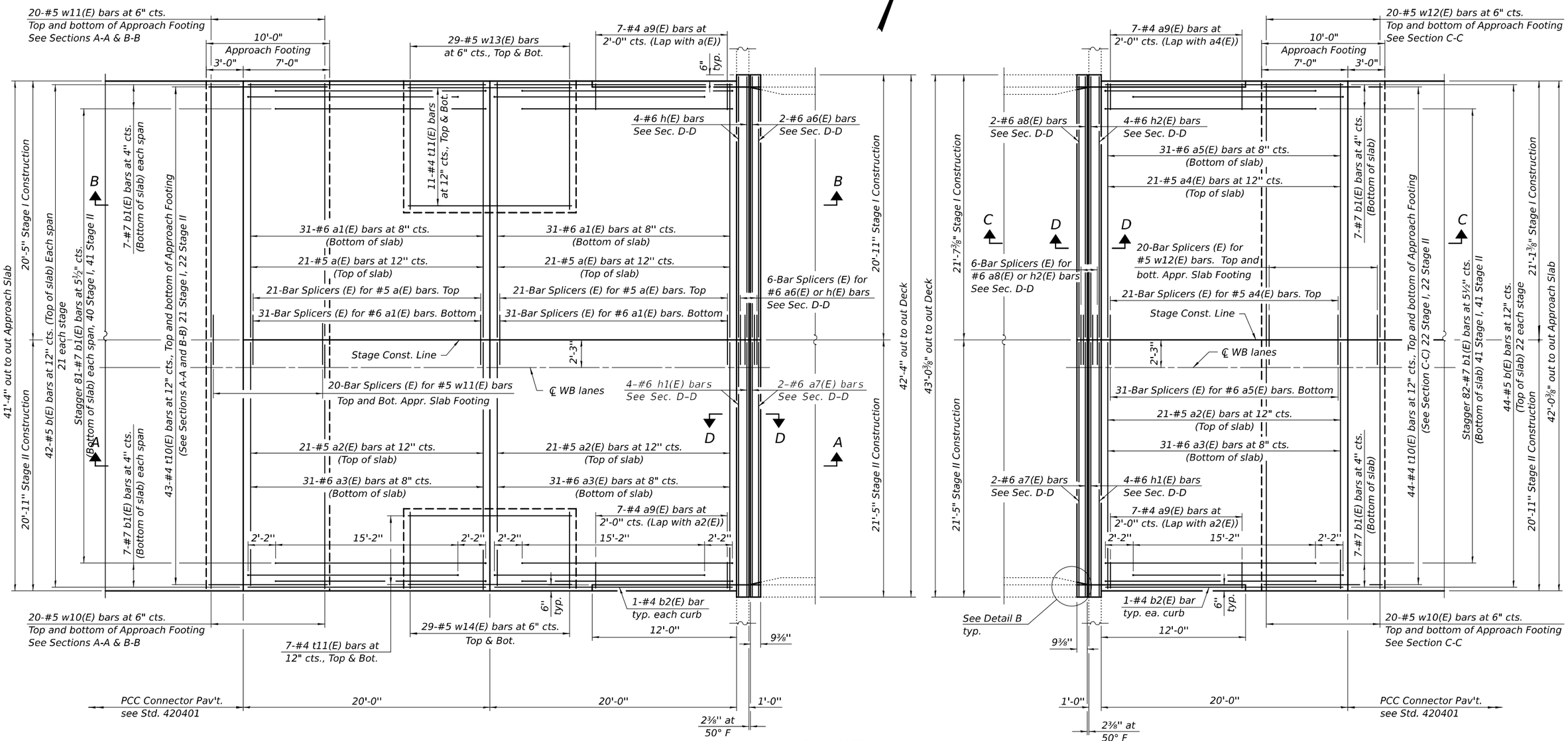

PLAN
West approach

PLAN
East approach

For Sections A-A, B-B, C-C and D-D, see sheet 5 of 9.
For Detail B, see sheet 6 of 9.

FILE NAME: C:\SPWHKS & CO\Jobs-Spring - Projects\IDOT D-89167 PTB 197-041\9167.14 170 over Beaver Creek\CADD10.12\CADD Data\Bridge\003_0009.dgn

design firm no. 184001036
whks engineers + planners + land surveyors

USER NAME = karte	DESIGNED - JLM	REVISED -	
	CHECKED - SBC	REVISED -	
PLOT DATE = 8/8/2024	DRAWN - DLH	REVISED -	
PLOT DATE = 7:50:36 AM	CHECKED - JLM	REVISED -	

ILLINOIS DEPARTMENT OF TRANSPORTATION

PROPOSED PLAN (WB)
STRUCTURE NO. 003–0009 & 003–0010

SHEET 3 OF 9 SHEETS

FAI RTE.	SECTION	COUNTY	TOTAL SHEETS	SHEET NO.
70	3-4BI	BOND	31	25
		CONTRACT NO. 76T82		
		ILLINOIS	FED. AID PROJECT	

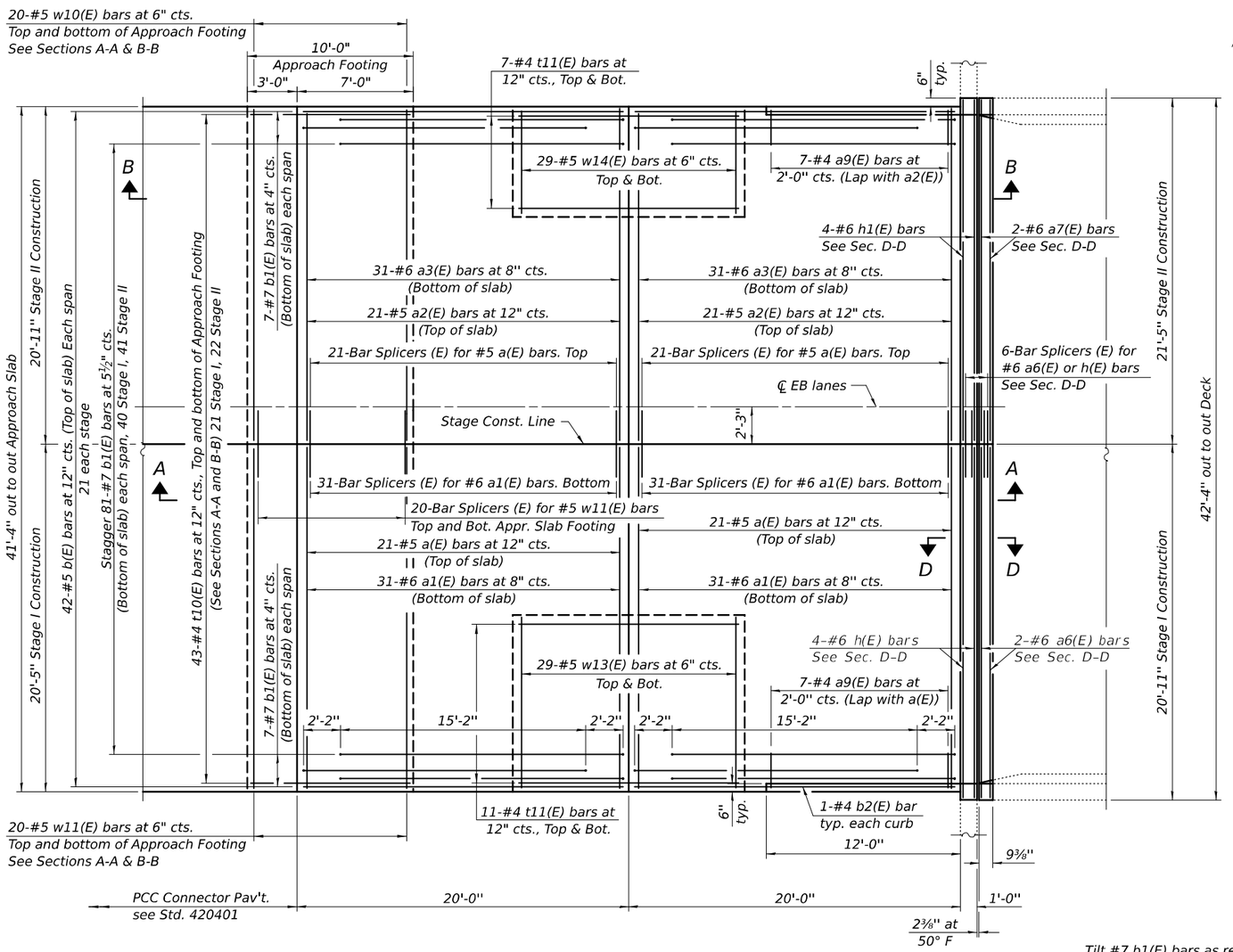

PLAN
West approach

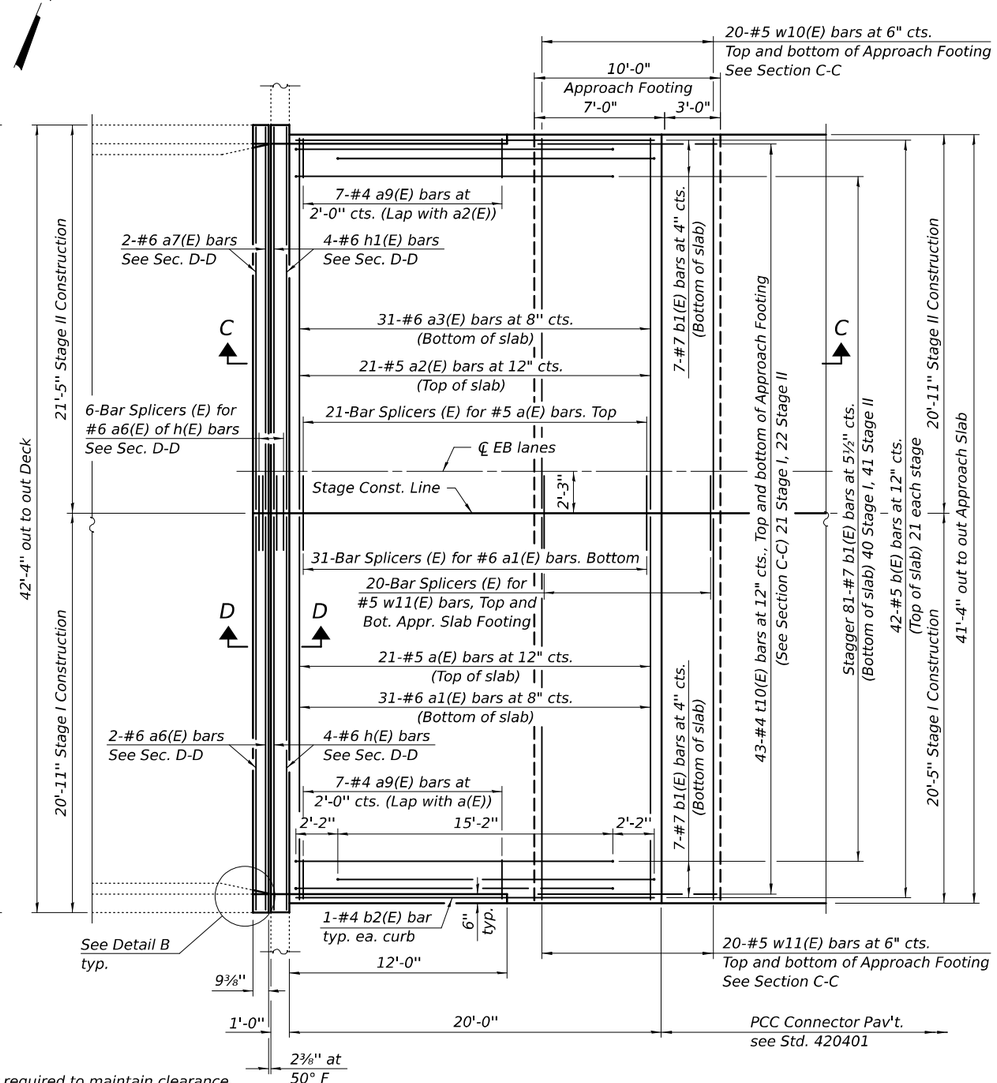

PLAN
East approach

For Sections A-A, B-B, C-C and D-D, see sheet 5 of 9.
For Detail B, see sheet 6 of 9.

FILE NAME: C:\SPWORKS & CO\Jobs-Spring - Projects\IDOT D-89167 PTB 197-041\9167_14 I70 over Beaver Creek\CADD10.12\CADD Data\B-Edge\003_0009.dgn

design firm no. 184001036 whks engineers + planners + land surveyors	USER NAME = karte	DESIGNED - JLM	REVISED -	ILLINOIS DEPARTMENT OF TRANSPORTATION	PROPOSED PLAN (EB) STRUCTURE NO. 003–0009 & 003–0010	FAI RTE.	SECTION	COUNTY	TOTAL SHEETS / SHEET NO.
		CHECKED - SBC	REVISED -			70	3-4BI	BOND	31 / 26
	PLOT DATE = 8/8/2024	DRAWN - DLH	REVISED -					CONTRACT NO. 76T82	
	PLOT DATE = 7:50:56 AM	CHECKED - JLM	REVISED -		SHEET 4 OF 9 SHEETS		ILLINOIS	FED. AID PROJECT	

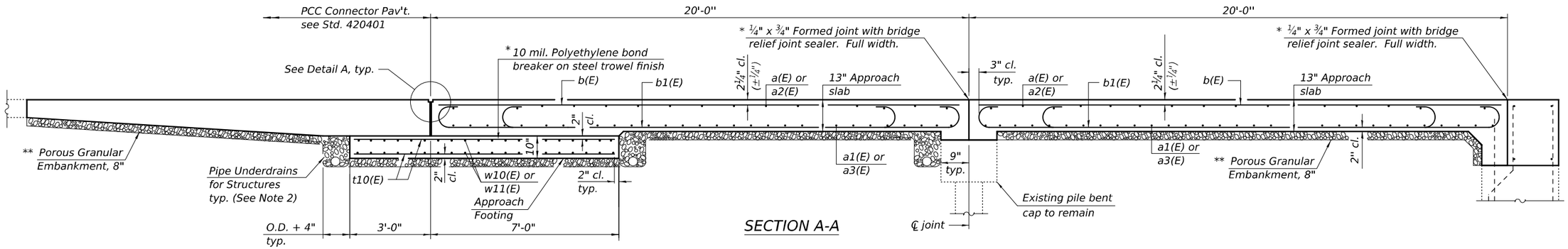

SECTION A-A

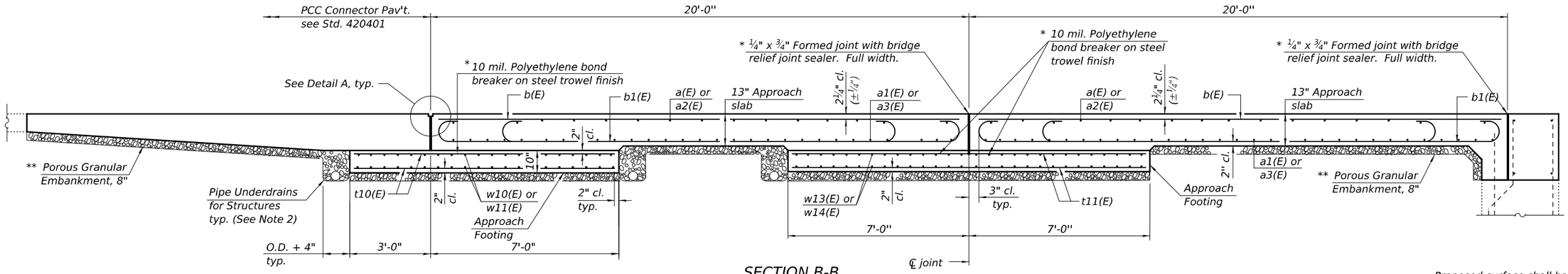

SECTION B-B

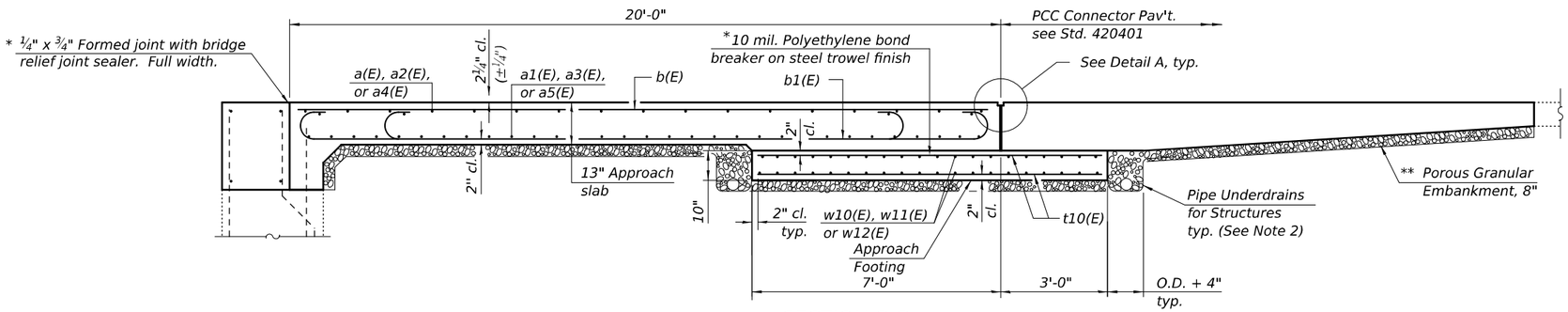

SECTION C-C

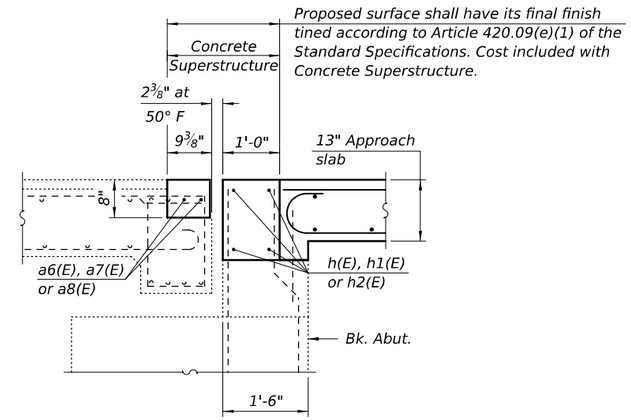

SECTION D-D

* Cost included with Concrete Superstructure (Approach Slab).

** Porous granular embankment shall be installed on top of geogrid and geotechnical fabric for ground stabilization.

Notes:

1. For Detail A, see Sheet 6 of 9.
2. All drainage system components shall extend 2'-0" from the outer edge of each approach slab except an outlet pipe shall extend until intersecting with the side slopes. The pipes shall be sloped a minimum 0.5% under the approach slabs to drain towards the exterior side slopes and drain into concrete headwalls. (See Article 601.05 of the Standard Specifications and Highway Standard 601101).
3. Cost of excavation necessary for placing Porous Granular Embankment will not be paid for separately but shall be included in the cost of Porous Granular Embankment.

TWO STRUCTURES BILL OF MATERIAL

Item	Unit	Total
Pipe Underdrain for Structures, 4"	Foot	503
Concrete Headwalls for Pipe Drains	Each	10
Geotechnical Fabric for Ground Stabilization	Sq. Yd.	815
Triaxial Geogrid Reinforcement, Type 1	Sq. Yd.	815
Porous Granular Embankment	Cu. Yd.	181

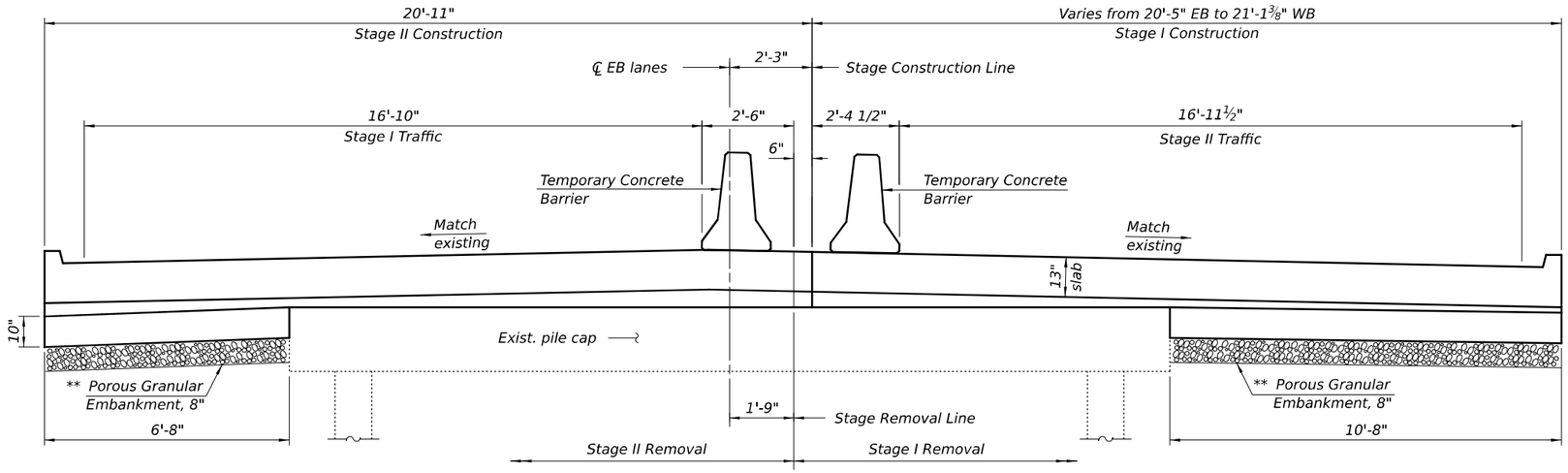

BRIDGE APPROACH CROSS SECTION

EB structure shown (Looking East), WB similar.

** Porous granular embankment shall be installed on top of geogrid and geotechnical fabric for ground stabilization.

Notes:

1. Approach slab shall be paid for as Concrete Superstructure (Approach Slab).
2. Approach footing concrete shall be paid for as Concrete Structures.
3. Cost of excavation for approach footing included with Concrete Structures.
4. For drainage treatment details, see sheet 5 of 9.

TWO STRUCTURES BILL OF MATERIAL

Bar	No.	Size	Length	Shape
a(E)	105	#5	20'-2"	
a1(E)	155	#6	20'-2"	
a2(E)	126	#5	20'-8"	
a3(E)	186	#6	20'-8"	
a4(E)	21	#5	20'-10"	
a5(E)	31	#6	20'-10"	
a6(E)	6	#6	20'-7"	
a7(E)	8	#6	21'-1"	
a8(E)	2	#6	21'-3"	
a9(E)	56	#4	3'-0"	
b(E)	254	#5	19'-8"	
b1(E)	571	#7	19'-0"	
b2(E)	8	#4	11'-8"	
h(E)	12	#6	20'-7"	
h1(E)	16	#6	21'-1"	
h2(E)	4	#6	21'-3"	
t10(E)	346	#4	9'-8"	
t11(E)	72	#4	13'-9"	
w10(E)	160	#5	20'-7"	
w11(E)	120	#5	20'-1"	
w12(E)	40	#5	20'-9"	
w13(E)	116	#5	10'-4"	
w14(E)	116	#5	6'-4"	
Approach Slab Removal			Sq. Yd.	676.7
Concrete Removal			Cu. Yd.	13.4
Concrete Structures			Cu. Yd.	66.3
Concrete Superstructure			Cu. Yd.	13.4
Concrete Superstructure (Approach Slab)			Cu. Yd.	211.3
Reinforcement Bars, Epoxy Coated			Pound	57,620

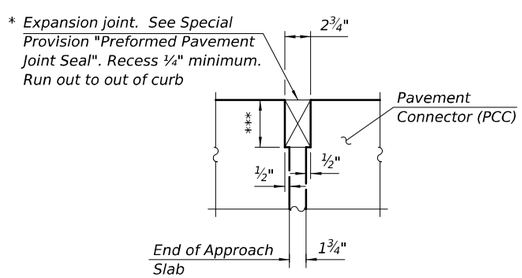

DETAIL A

* Cost included with Concrete Superstructure (Approach Slab)

*** Per manufacturer recommendations

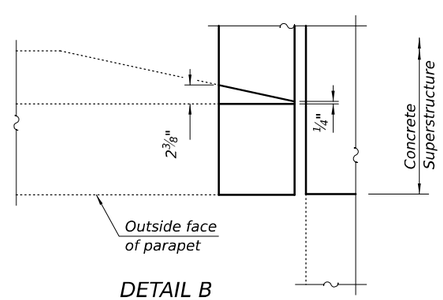

DETAIL B

(Cast proposed parapet and wingwall segment to match existing geometry.)

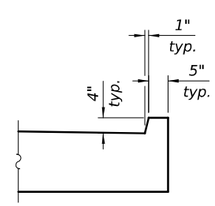

APROACH CURB DETAIL

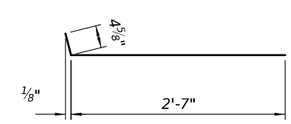

BAR a9(E)

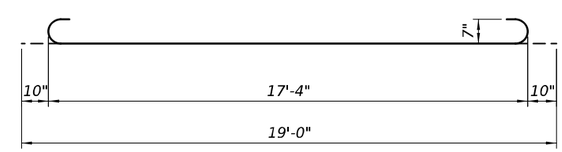

BAR b1(E)

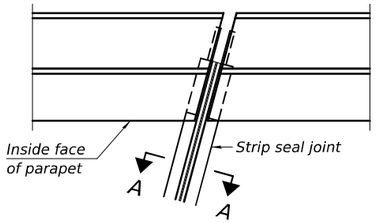

FOR SKEWS ≤ 30°

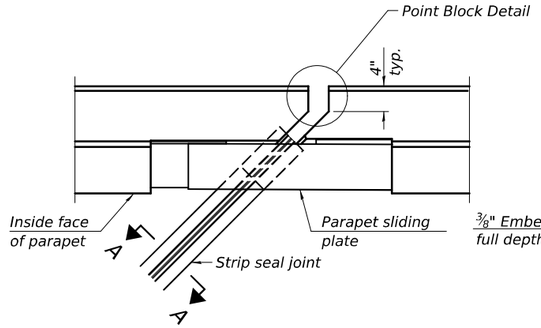

FOR SKEWS > 30°

PLAN AT PARAPET

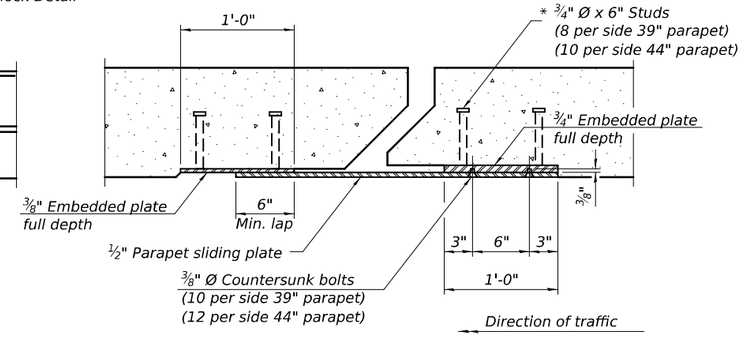

SECTION B-B

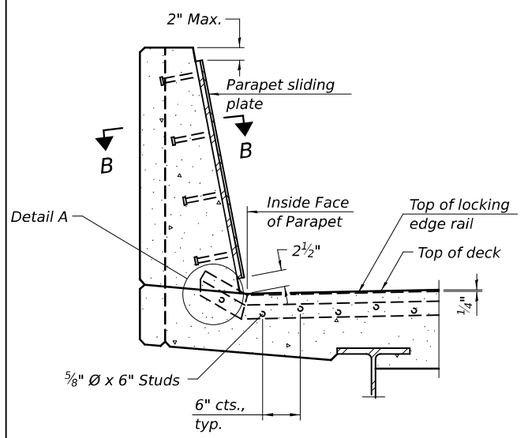

SECTION AT PARAPET

(Skews > 30° shown. Skews ≤ 30° similar except as shown in plan view.)

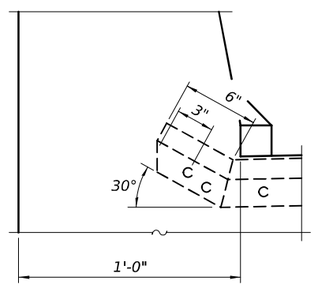

DETAIL A

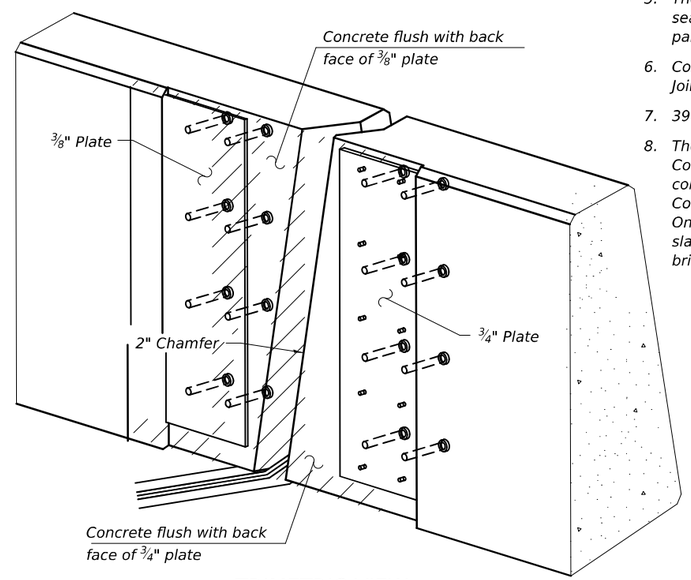

TRIMETRIC VIEW

(Showing embedded plates only)

Notes:

1. The strip seal shall be made continuous and shall have a minimum thickness of ¼". The configuration of the strip seal shall match the configuration of the locking edge rails. Open or "webbed" strip seal gland configurations are not permitted. The gland shall be sized for a maximum rated movement of 4 inches.
2. The locking edge rails depicted are configured for typical applications and are conceptual only. The actual configuration of the locking edge rails and matching strip seal may vary from manufacturer to manufacturer provided they fit the application and meet the minimum anchorage shown. Flanged edge rails, however, will not be allowed. Locking edge rails may exceed the 4½" maximum depth provided the anchorage system is revised according to the manufacturer's recommendation.
3. The manufacturer's recommended installation methods shall be followed.
4. All steel components shall be galvanized after fabrication according to Article 520.03 of the Standard Specifications.
5. The Maximum space between locking edge rail segments shall be c" and sealed with a suitable sealant; however, any rail joint within 10' measured perpendicular to the face of the curb or parapet shall be welded as shown in the locking edge rail splice detail.
6. Cost of parapet sliding plates, embedded plates, and anchorage studs included with Preformed Joint Strip Seal.
7. 39" constant slope barrier shown, 44" constant slope barrier similar as noted.
8. The concrete opening below the strip seal will vary basedon the locking edge rail chosen by the Contractor. Deck and parapet lengths shown elsewhere in the plans are dimensioned to the concrete opening, not the joint opening, and are based on the rolled locking edge rail. If the Contractor elects to use a different locking edge rail, dimensional adjustments may be required. One exception to this would be the strip seal joint at the end of the precast bridge approach slab. For these cases the pavement connector length shall be adjusted, not the length of the bridge approach slab.

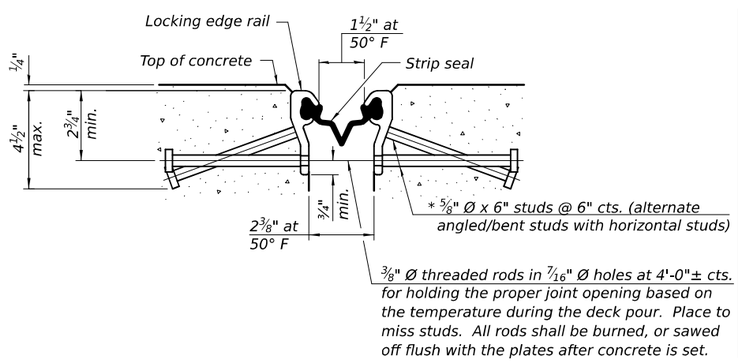

SHOWING ROLLED RAIL JOINT

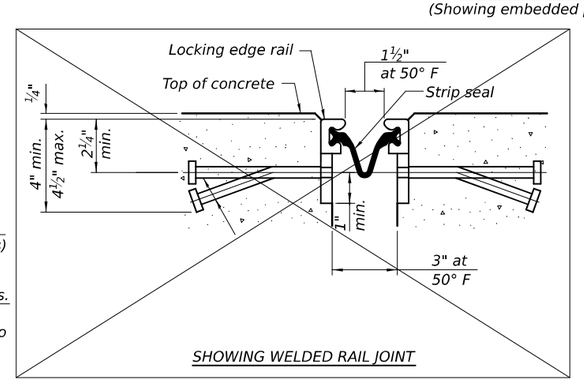

SHOWING WELDED RAIL JOINT

SECTION A-A

* Granular or solid flux filled headed studs conforming to Article 1006.32 of the Std. Specs., automatically end welded.

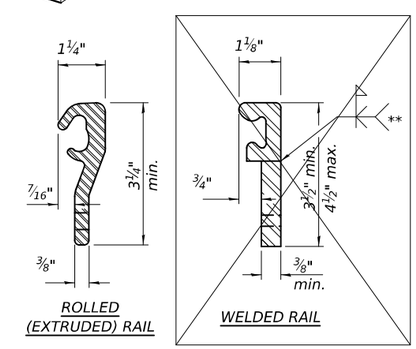

ROLLED (EXTRUDED) RAIL

WELDED RAIL

LOCKING EDGE RAILS

** Back gouge not required if complete joint penetration is verified by mock-up.

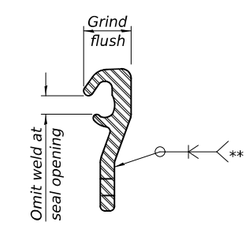

LOCKING EDGE RAIL SPLICE

The inside of the locking edge rail groove shall be free of weld residue. Rolled rail shown, welded rail similar.

BILL OF MATERIAL

Item	Unit	Total
Preformed Joint Strip Seal	Foot	165

EJ-SS

5-15-2023 (Modified)

FILE NAME: C:\SP\WHKS & CO\Abs-Spring - Projects\IDOT D-89167 PTB 197-041\9167_14 170 over Beaver Creek\CADD\10.12\CADD Data\Bridge\003_0009.dgn

design firm no. 184001036 whks engineers + planners + land surveyors

USER NAME = karte	DESIGNED - JLM	REVISED -	
	CHECKED - SBC	REVISED -	
PLOT DATE = 8/8/2024	DRAWN - DLH	REVISED -	
PLOT DATE = 7:52:05 AM	CHECKED - JLM	REVISED -	

ILLINOIS DEPARTMENT OF TRANSPORTATION

PREFORMED JOINT STRIP SEAL
STRUCTURE NO. 003–0009 & 003–0010

SHEET 7 OF 9 SHEETS

FAI RTE.	SECTION	COUNTY	TOTAL SHEETS	SHEET NO.
70	3-4BI	BOND	31	29

CONTRACT NO. 76T82

ILLINOIS | FED. AID PROJECT

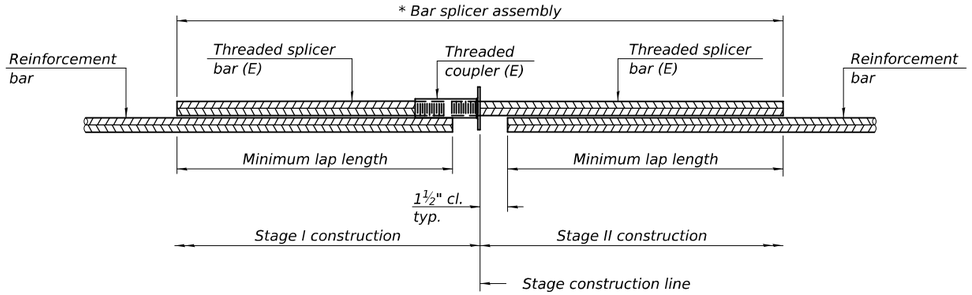

STANDARD BAR SPLICER ASSEMBLY PLAN

Only bar splicer assemblies as presented on the approved QPL list may be used.

Threaded splicer bar length = min. lap length + 1½" + thread length

* Epoxy not required on Bar Splicer Assembly components used in conjunction with black bars.

Location	Bar size	No. assemblies required	Minimum lap length
Approach Slab	#5	126	3'-0"
Approach Slab	#6	186	3'-7"
Joint	#6	24	4'-0"
Approach Footing	#5	160	3'-0"

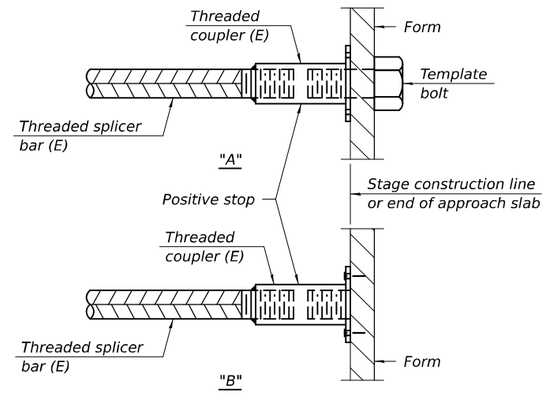

INSTALLATION AND SETTING METHODS

"A" : Set bar splicer assembly by means of a template bolt.
"B" : Set bar splicer assembly by nailing to wood forms or cementing to steel forms.
(E) : Indicates epoxy coating.

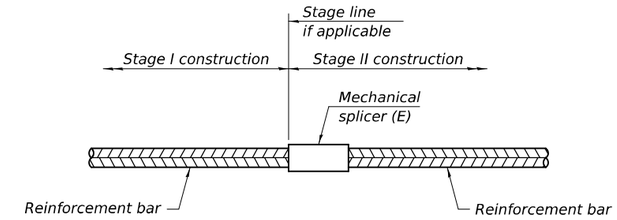

STANDARD MECHANICAL SPLICER

Location	Bar size	No. assemblies required

Notes:

1. Splicer bars shall be deformed with threaded ends and have a minimum 60 ksi yield strength.
2. All reinforcement shall be lapped and tied to the splicer bars.
3. Bar splicer assemblies shall be epoxy coated according to the requirements for reinforcement bars. See Section 508 of the Standard Specifications.
4. See approved list of bar splicer assemblies and mechanical splicers for alternatives.

BSD-1 5-15-2023

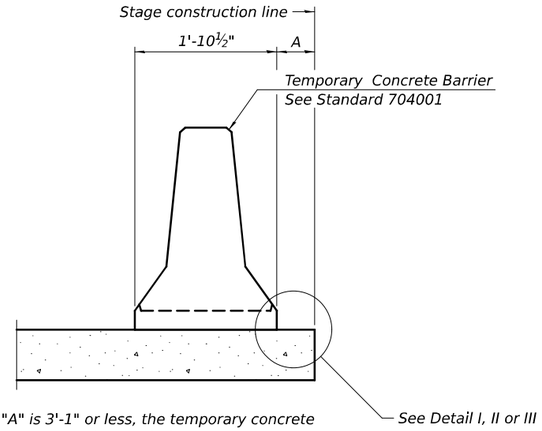

When "A" is 3'-1" or less, the temporary concrete barrier shall be restrained to the new slab according to Detail I, II or III. No restraint is required when "A" is greater than 3'-1".

NEW SLAB OR NEW DECK BEAM

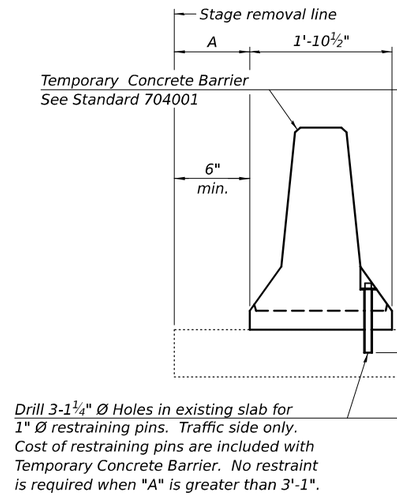

EXISTING SLAB

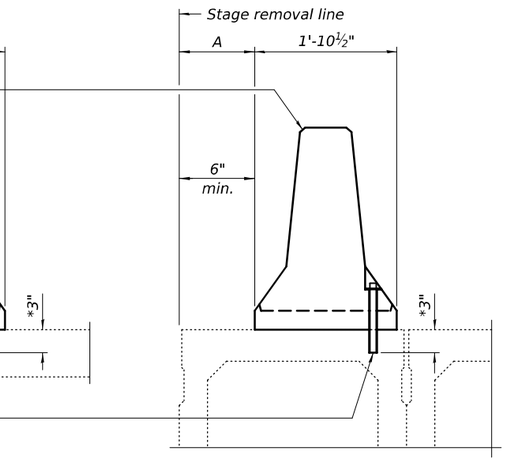

* When hot-mix asphalt wearing surface is present, embedment shall be 3" plus the wearing surface depth.

EXISTING DECK BEAM

SECTIONS THRU SLAB OR DECK BEAM

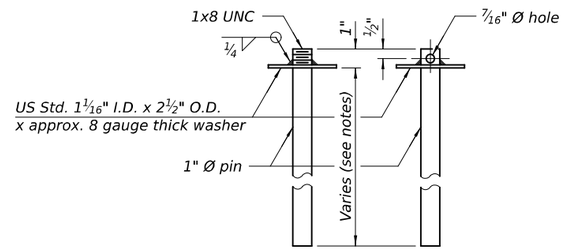

RESTRAINING PIN

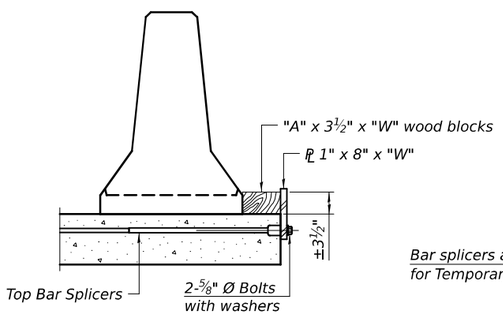

DETAIL I

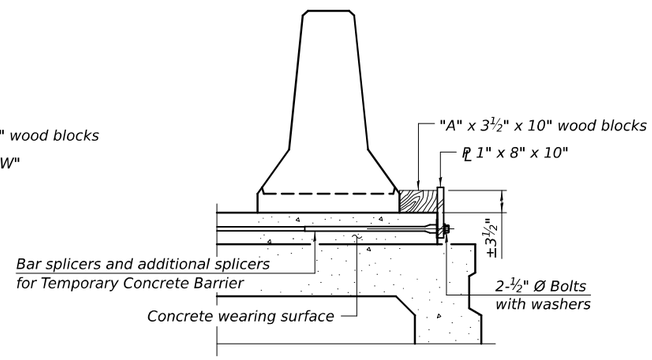

DETAIL II

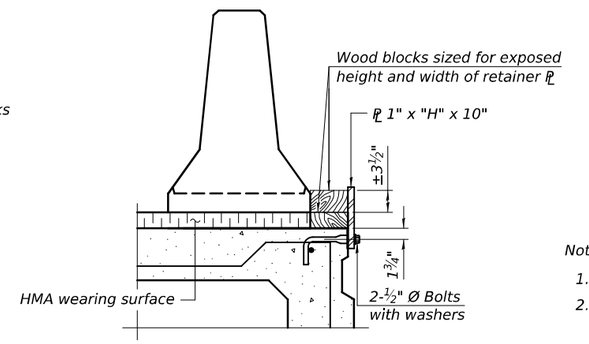

DETAIL III

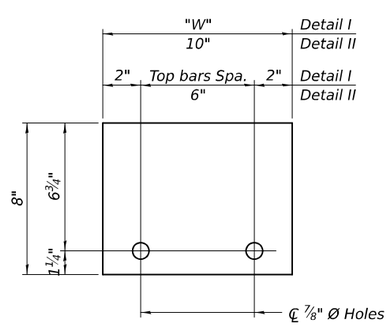

STEEL RETAINER PL 1" x 8" x "W"

(Detail I and II)

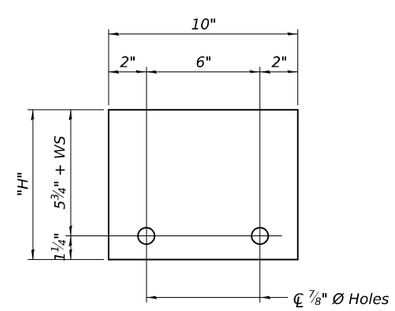

STEEL RETAINER PL 1" x "H" x 10"

(Detail III)

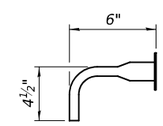

BAR SPLICER FOR #4 BAR - DETAIL III

Notes:

1. Cost of retainer assembly is included with Temporary Concrete Barrier.
2. A retainer assembly shall be located at the approximate ℄ of each temporary concrete barrier.
3. The retainer plate shall not be removed until the concrete on the adjacent stage is ready to be poured. For Detail III applications the retainer plate shall not be removed until just prior to placing the adjacent beam.
4. When the 'A' dimension is less than 1½", the wood block shall be omitted and the barrier shall be placed in direct contact with the steel retainer plate. For deck beam applications the minimum required 'A' distance is 6" to accommodate the shear key clamping device.

Detail I - Installation for a new bridge deck or bridge slab.

Detail II - Installation for a new deck beam with an initial concrete wearing surface. Additional bar splicers shall be provided at 6'-0" centers and paired with the bar splicers of the concrete wearing surface reinforcement to accommodate the installation of the retainer assemblies. The cost of the additional bar splicers is included with the concrete wearing surface.

Detail III - Installation for a new deck beam with no initial wearing surface or with an initial hot-mix asphalt (HMA) wearing surface present. The deck beam directly beneath the temporary concrete barrier shall be fabricated with bar splicer inserts in the side of the beam, as detailed, to accommodate the installation of the retainer assemblies. A pair of bar splicers, 6" apart, shall be placed at 6'-0" centers along the length of the beam. The cost of the bar splicers is included with the deck beam.

RAILING CRITERIA

NCHRP 350 Test Level	3
Railing Weight (plf)	440

R-27

5-15-2023

FILE NAME: C:\SPWHKS & CO\Jobs-Spring - Projects\DOT D-80167 PTB 197-041 9167.14 I70 over Beaver Creek\CADD10.12\CADD Data\Bridge\003_0009.dgn

design firm no. 184-001036

whks engineers + planners + land surveyors

USER NAME = karte	DESIGNED - JLM	REVISED -	
	CHECKED - SBC	REVISED -	
PLOT DATE = 8/8/2024	DRAWN - DLH	REVISED -	
PLOT DATE = 7:52:47 AM	CHECKED - JLM	REVISED -	

ILLINOIS DEPARTMENT OF TRANSPORTATION

TEMPORARY CONCRETE BARRIER

STRUCTURE NO. 003–0009 & 003–0010

SHEET 9 OF 9 SHEETS

FAI RTE.	SECTION	COUNTY	TOTAL SHEETS	SHEET NO.
70	3-4BI	BOND	31	31

CONTRACT NO. 76T82

ILLINOIS | FED. AID PROJECT