11-08-2024 LETTING ITEM 046

F.A. RTE.	SECTION	COUNTY	TOTAL SHEETS	SHEET NO.
VAR	D4 BRIDGE PAINTING 2025	*	52	1
		ILLINOIS	CONTRACT NO. 68J34	

* HENDERSON, MCDONOUGH, MERCER, WARREN

D-94-058-24

STATE OF ILLINOIS
DEPARTMENT OF TRANSPORTATION
DIVISION OF HIGHWAYS

PROPOSED
HIGHWAY PLANS

(VAR) ROUTE VARIOUS
SECTION D4 BRIDGE PAINTING 2025
FED. PROJECT NO.: STP-E5QK(085)
VARIOUS COUNTIES

C-94-086-24

INDEX OF SHEETS

1	COVER SHEET
2	GENERAL NOTES AND COMMITMENTS
3-4	SUMMARY OF QUANTITIES
5	LOCATION MAP
6-12	TRAFFIC CONTROL SHEETS
13-17	LOCATION 1 - STRUCTURE INFORMATION
18-22	LOCATION 2 - STRUCTURE INFORMATION
23-29	LOCATION 3 & 4 - STRUCTURE INFORMATION
30-43	LOCATION 5 - STRUCTURE INFORMATION
44-52	LOCATION 6 - STRUCTURE INFORMATION

HIGHWAY STANDARDS

000001-08	STANDARD SYMBOLS, ABBREVIATIONS AND PATTERNS
701001-02	OFF-RD OPERATIONS, 2L, 2W, MORE THAN 15' (4.5 m) AWAY
701006-05	OFF-RD OPERATIONS, 2L, 2W, 15' (4.5 m) TO 24" (600 mm) FROM PAVEMENT EDGE
701101-05	OFF-RD OPERATIONS, MULTILANE, 15' (4.5 m) TO 24" (600 mm) FROM PAVEMENT EDGE
701106-02	OFF-RD OPERATIONS, MULTILANE, MORE THAN 15' (4.5 m) AWAY
701321-18	LANE CLOSURE, 2L, 2W, BRIDGE REPAIR WITH BARRIER
701400-12	APPROACH TO LANE CLOSURE, FREEWAY/EXPRESSWAY
701402-12	LANE CLOSURE FREEWAY/EXPRESSWAY WITH BARRIER
701426-09	LANE CLOSURE, MULTILANE, INTERMITTENT OR MOVING OPER., FOR SPEEDS ≥ 45 MPH
701428-01	TRAFFIC CONTROL SETUP AND REMOVAL FREEWAY/EXPRESSWAY
701901-09	TRAFFIC CONTROL DEVICES
704001-08	TEMPORARY CONCRETE BARRIER
780001-05	TYPICAL PAVEMENT MARKINGS
781001-04	TYPICAL APPLICATIONS RAISED REFLECTIVE PAVEMENT MARKERS
782006-01	GUARDRAIL AND BARRIER WALL REFLECTOR MOUNTING DETAILS

TRAFFIC DATA - ADT

LOCATION 1 - 1500 (2023)
LOCATION 2 - 1600 (2023)
LOCATION 3 - 6350 (2023)
LOCATION 4 - 6350 (2023)
LOCATION 5 - 1500 (2023)
LOCATION 6 - 1300 (2023)

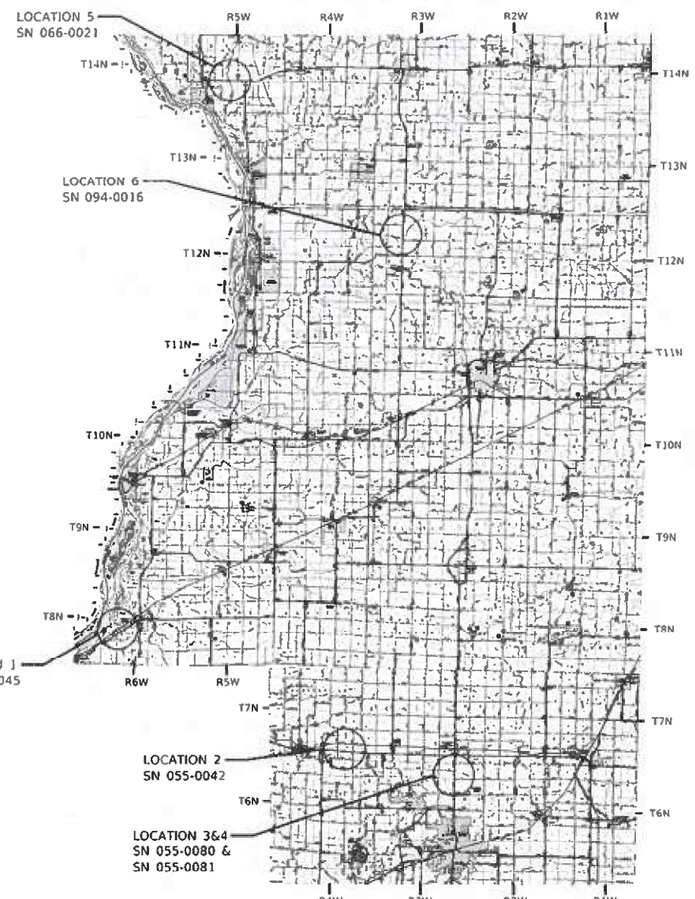

NOT TO SCALE

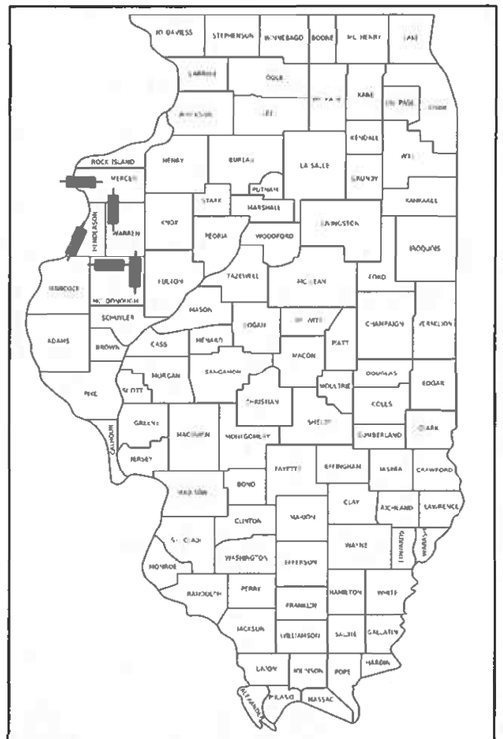

LOCATION OF SECTION INDICATED THUS:-

FULL SIZE PLANS HAVE BEEN PREPARED USING STANDARD ENGINEERING SCALES. REDUCED SIZED PLANS WILL NOT CONFORM TO STANDARD SCALES. IN MAKING MEASUREMENTS ON REDUCED PLANS, THE ABOVE SCALES MAY BE USED.

J.U.L.I.E.
JOINT UTILITY LOCATION INFORMATION FOR EXCAVATORS
1-800-892-0123
OR 811

PROJECT ENGINEER: BEN TELLEFSON
PROJECT MANAGER: MARK ECKHOFF

CONTRACT NO. 68J34
CATALOG NO. 036538-00D

LICENSED PROFESSIONAL ENGINEER TIMOTHY B. PADGETT 062-049162 STATE OF ILLINOIS

TIMOTHY B. PADGETT, P.E. EXPIRATION DATE
LICENSE NO. 062-049162 11-30-2025

PLANS PREPARED BY:

TWM ENGINEERING GEOSPATIAL SERVICES
4940 Old Collinsville Road
Swansea, Illinois 62226
Tel: 618.624.4488
www.twm-inc.com
Illinois Professional Design Firm
No. 184-001220
License Expires: 4/30/2025
ILLINOIS - MISSOURI - TENNESSEE

STATE OF ILLINOIS
DEPARTMENT OF TRANSPORTATION

SUBMITTED August 16 20 24
Kessil A. Garrett
REGIONAL ENGINEER

October 4, 2024
ENGINEER OF DESIGN AND ENVIRONMENT

October 4, 2024
DIRECTOR OF HIGHWAYS PROJECT IMPLEMENTATION

13

PRINTED BY THE AUTHORITY OF THE STATE OF ILLINOIS

COMMITMENTS

NO COMMITMENTS HAVE BEEN MADE FOR THIS PROJECT.

ADDITIONAL SUPPLEMENTAL TRAFFIC CONTROL

THE DEPARTMENT RESERVES THE RIGHT AT ANY TIME TO ADD ADDITIONAL TRAFFIC CONTROL SYSTEMS OR DEVICES WITHIN THE ACTIVE CONTRACT LIMITS, BY MEANS OF AN ADDITIONAL CONTRACT. ALL TERMS OF ARTICLE 105.08 OF THE STANDARD SPECIFICATIONS SHALL BE FOLLOWED BY EACH CONTRACTOR.

PROJECT SPECIFIC NOTES

DO NOT SCALE PLANS FOR CONSTRUCTION MEASUREMENTS. THE CONTRACTOR SHALL FIELD VERIFY EXISTING DIMENSIONS AND MAKE NECESSARY APPROVED ADJUSTMENTS PRIOR TO ORDERING OF MATERIALS. SUCH VARIATIONS SHALL NOT BE CAUSE FOR ADDITIONAL COMPENSATION FOR A CHANGE IN SCOPE.

LOCATION 1 SN 036-0045: BEAM ENDS PREVIOUSLY METALIZED. PAINT ENTIRE STRUCTURE.

LOCATION 2 SN 055-0042: PAINT ENTIRE STRUCTURE.

LOCATION 3 & 4 SN 055-0080 & SN 055-0081: PAINT ENTIRE STRUCTURE. EXISTING STEEL IS BARE WEATHERING STEEL

LOCATION 5 SN 066-0021: BEAM ENDS PREVIOUSLY METALIZED. PAINT ENTIRE STRUCTURE INCLUDING THE SUPPORTING STEEL FOR THE USGS GAGE HOUSE. THE USGS GAGE HOUSE DOES NOT GET PAINTED. EXISTING STEEL IS BARE WEATHERING STEEL.

LOCATION 6 SN 094-0016: BEAM ENDS PREVIOUSLY METALIZED. PAINT ENTIRE STRUCTURE.

THE EXISTING STRUCTURAL STEEL COATING ON LOCATIONS 1 THRU 6 DOES NOT CONTAIN LEAD.

FOR EXISTING SURFACES THAT HAVE BEEN PREVIOUSLY METALIZED WITH THERMAL METALLIC SPRAY, THE INTENT IS TO PREPARE THESE AREAS FOR OVERCOATING WITH THE PROPOSED NEW PAINT SYSTEM BY BRUSH-OFF BLAST CLEANING IN ACCORDANCE WITH SSPC-SP 16. ALL OTHER ASPECTS IN THE SPECIAL PROVISION "CLEANING AND PAINTING EXISTING STEEL STRUCTURES" STILL APPLY.

CLEANING AND PAINTING OF THE EXISTING STRUCTURAL STEEL SHALL BE AS SPECIFIED IN THE SPECIAL PROVISIONS FOR "CLEANING AND PAINTING EXISTING STEEL STRUCTURES". ALL BEAMS, BEARINGS AND OTHER STRUCTURAL STEEL, EXCEPT FOR THE METALIZED BEAM ENDS SHALL BE CLEANED PER NEAR WHITE BLAST CLEANING SSPC-SP10.

THE DESIGNATED AREAS CLEANED PER NEAR WHITE BLAST CLEANING SSPC-SPI0 SHALL BE PAINTED ACCORDING TO THE REQUIREMENTS OF PAINT SYSTEM 1 OZ/E/U.

FOR LOCATIONS 1-6, THE COLOR OF THE FINAL FINISH COAT FOR ALL INTERIOR AND EXTERIOR STEEL SURFACES SHALL BE LIGHT GREY (MUNSELL NO. 5B 7/1).

ONLY STRUCTURAL STEEL AND OTHER DESIGNATED SURFACES SHALL BE PAINTED. ALL OTHER SURFACES SHALL BE PROTECTED FROM CONTRACTOR'S BLASTING AND PAINTING OPERATIONS. ANY AREAS THAT ARE DAMAGED BY BLASTING OR OVERSPRAY WILL BE REMOVED OR REPAIRED AT THE CONTRACTOR'S EXPENSE AND NO ADDITIONAL COMPENSATION WILL BE ALLOWED.

CARE SHALL BE TAKEN NOT TO DAMAGE THE ELASTOMERIC BEARINGS OR JOINT COMPONENTS DURING BLASTING AND CLEANING OPERATIONS. ANY DAMAGE TO THESE COMPONENTS WILL BE REPAIRED AT THE CONTRACTOR'S EXPENSE.

THE SSPC-QP1 PAINTING CONTRACTOR CERTIFICATION WILL BE REQUIRED FOR THIS CONTRACT.

CONTAINMENT OF CLEANING RESIDUE IS REQUIRED TO CONTROL NUISANCE DUST. SEE SPECIAL PROVISIONS.

ALL TRASH AND PAINTING DEBRIS, EXCLUDING WASTE BARRELS OR ROLL-OFF DUMPSTERS, SHALL BE REMOVED BEFORE BEGINNING WORK AT ANOTHER LOCATION.

THE CONTRACTOR SHALL SUBMIT CALCULATIONS AND DETAILS DEMONSTRATING THE STRUCTURAL INTEGRITY OF THE BRIDGE IS MAINTAINED UNDER THE ADDITIONAL IMPOSED LOADS OF THE CONTAINMENT SYSTEM. SEE SPECIAL PROVISIONS.

CODE NO.	PAY ITEM	UNIT	TOTAL QUANTITY	CONSTRUCTION CODE				
				LOCATION 1	LOCATION 2	LOCATION 3 & 4	LOCATION 5	LOCATION 6
				IL 96	IL 9	NB / SB US 67	IL 17	IL 94 & 135
				SN 036-0045	SN 055-0042	SN 055-0080/055-0081	SN 066-0021	SN 094-0016
				HENDERSON	MCDONOUGH	MCDONOUGH	MERCER	WARREN
				RURAL	RURAL	RURAL	RURAL	RURAL
				80% FEDERAL	80% FEDERAL	80% FEDERAL	80% FEDERAL	80% FEDERAL
				20% STATE	20% STATE	20% STATE	20% STATE	20% STATE
				0047	0047	0047	0047	0047
67100100	MOBILIZATION	L SUM	1	0.20	0.20	0.20	0.20	0.20
70100405	TRAFFIC CONTROL AND PROTECTION, STANDARD 701321	EACH	4	1	1		1	1
70106500	TEMPORARY BRIDGE TRAFFIC SIGNALS	EACH	4	1	1		1	1
70106700	TEMPORARY RUMBLE STRIPS	EACH	24	6	6		6	6
70107005	PAVEMENT MARKING BLACKOUT TAPE, 5"	FOOT	2462	709	863	570	80	240
70107025	CHANGEABLE MESSAGE SIGN	CAL DA	374	46	42	82	142	62
70300150	SHORT TERM PAVEMENT MARKING REMOVAL	SQ FT	1026	295	360	238	33	100
70400100	TEMPORARY CONCRETE BARRIER	FOOT	2912.5	387.5	325	837.5	837.5	525
70400200	RELOCATE TEMPORARY CONCRETE BARRIER	FOOT	2875	387.5	325	800	837.5	525
70600250	IMPACT ATTENUATORS, TEMPORARY (NON- REDIRECTIVE), TEST LEVEL 3	EACH	11	2	2	3	2	2
70600350	IMPACT ATTENUATORS, RELOCATE (NON- REDIRECTIVE), TEST LEVEL 3	EACH	11	2	2	3	2	2
X5060601	CONTAINMENT AND DISPOSAL OF NON-LEAD PAINT CLEANING RESIDUES NO. 1	L SUM	1	1				
X5060602	CONTAINMENT AND DISPOSAL OF NON-LEAD PAINT CLEANING RESIDUES NO. 2	L SUM	1		1			
X5060603	CONTAINMENT AND DISPOSAL OF NON-LEAD PAINT CLEANING RESIDUES NO. 3	L SUM	1			1		
X5060604	CONTAINMENT AND DISPOSAL OF NON-LEAD PAINT CLEANING RESIDUES NO. 4	L SUM	1			1		
X5060605	CONTAINMENT AND DISPOSAL OF NON-LEAD PAINT CLEANING RESIDUES NO. 5	L SUM	1				1	
X5060606	CONTAINMENT AND DISPOSAL OF NON-LEAD PAINT CLEANING RESIDUES NO. 6	L SUM	1					1
X7010208	TRAFFIC CONTROL AND PROTECTION, STANDARD 701402 (SPECIAL)	EACH	1			1		

MODEL: Default
FILE NAME: P:\2023\23098AID - Bridge Painting (FY 2023)\4 CADD - DWG\4.7 Trans\Sheets\046834\0468J34-sht-SOQ.dgn

TWM ENGINEERING GEOSPATIAL SERVICES
TWM, INC.
WWW.TWM-INC.COM
IL DESIGN FIRM LICENSE NO: 184-001220

USER NAME = dlee	DESIGNED - JCL	REVISED -
	DRAWN - JCL	REVISED -
PLOT SCALE = 10.0000 ' / in.	CHECKED - TBP	REVISED -
PLOT DATE = 8/14/2024	DATE - JULY 2024	REVISED -

STATE OF ILLINOIS
DEPARTMENT OF TRANSPORTATION

SUMMARY OF QUANTITIES

SCALE: | SHEET 1 OF 2 SHEETS | STA. TO STA.

F.A. RTE.	SECTION	COUNTY	TOTAL SHEETS	SHEET NO.
VAR	D4 BRIDGE PAINTING 2025	*	52	3
* HENDERSON, MCDONOUGH, MERCER, WARREN		CONTRACT NO. 68J34		
	ILLINOIS	FED. AID PROJECT		

CODE NO.	PAY ITEM	UNIT	TOTAL QUANTITY	CONSTRUCTION CODE				
				LOCATION 1	LOCATION 2	LOCATION 3 & 4	LOCATION 5	LOCATION 6
				IL 96	IL 9	NB / SB US 67	IL 17	IL 94 & 135
				SN 036-0045	SN 055-0042	SN 055-0080/055-0081	SN 066-0021	SN 094-0016
				HENDERSON	MCDONOUGH	MCDONOUGH	MERCER	WARREN
				RURAL	RURAL	RURAL	RURAL	RURAL
				80% FEDERAL	80% FEDERAL	80% FEDERAL	80% FEDERAL	80% FEDERAL
				20% STATE	20% STATE	20% STATE	20% STATE	20% STATE
				0047	0047	0047	0047	0047
Z0010501	CLEANING AND PAINTING STEEL BRIDGE NO. 1	L SUM	1	1				
Z0010502	CLEANING AND PAINTING STEEL BRIDGE NO. 2	L SUM	1		1			
Z0010503	CLEANING AND PAINTING STEEL BRIDGE NO. 3	L SUM	1			1		
Z0010504	CLEANING AND PAINTING STEEL BRIDGE NO. 4	L SUM	1			1		
Z0010505	CLEANING AND PAINTING STEEL BRIDGE NO. 5	L SUM	1				1	
Z0010506	CLEANING AND PAINTING STEEL BRIDGE NO. 6	L SUM	1					1

MODEL: Default
FILE NAME: P:\2023\3698AID - Bridge Painting (FY 2023)\4 CADD - DWG\4.7 TranSheets\D468J34\D468J34-sht-SQQ.dgn

TWM ENGINEERING & GEOSPATIAL SERVICES
TWM, INC.
WWW.TWM-INC.COM
IL DESIGN FIRM LICENSE NO: 184-001220

USER NAME = dlee	DESIGNED - JCL	REVISED -
	DRAWN - JCL	REVISED -
PLOT SCALE = 10.0000 ' / in.	CHECKED - TBP	REVISED -
PLOT DATE = 8/14/2024	DATE - JULY 2024	REVISED -

STATE OF ILLINOIS
DEPARTMENT OF TRANSPORTATION

SUMMARY OF QUANTITIES

SCALE: | SHEET 2 OF 2 SHEETS | STA. TO STA.

F.A. RTE.	SECTION	COUNTY	TOTAL SHEETS	SHEET NO.
VAR	D4 BRIDGE PAINTING 2025	*	52	4
* HENDERSON, MCDONOUGH, MERCER, WARREN		CONTRACT NO. 68J34		
	ILLINOIS	FED. AID PROJECT		

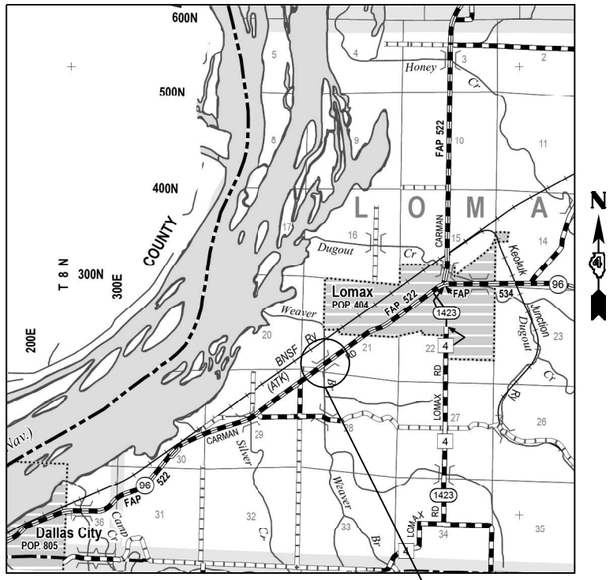

LOCATION 1
SN 036-0045
IL 96 OVER WEAVER CREEK

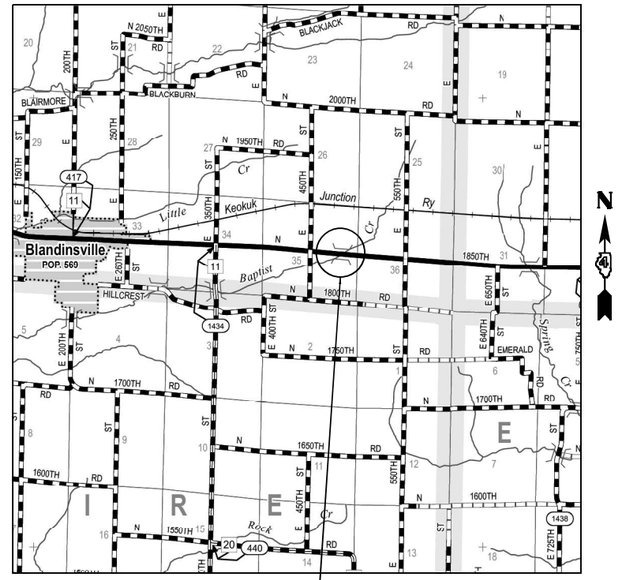

LOCATION 2
SN 055-0042
IL 9 OVER BAPTIST CREEK

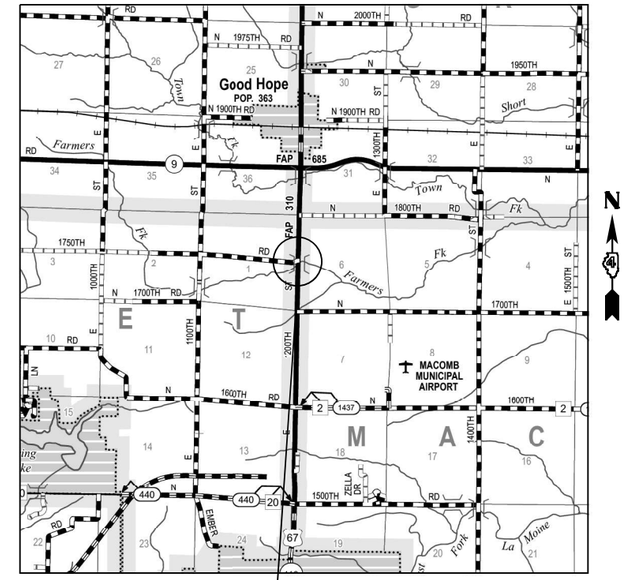

LOCATION 3 & 4
SN 055-0080 & SN 055-0081
NB US 67 OVER FARMERS FORK &
SB US 67 OVER FARMERS FORK

LOCATION 5
SN 066-0021
IL 17 OVER EDWARDS RIVER

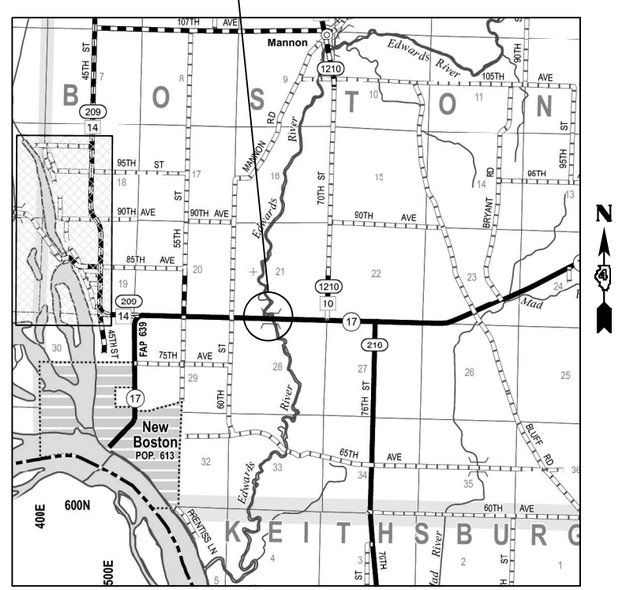

LOCATION 6
SN 094-0016
IL 94/135 OVER HENDERSON CREEK

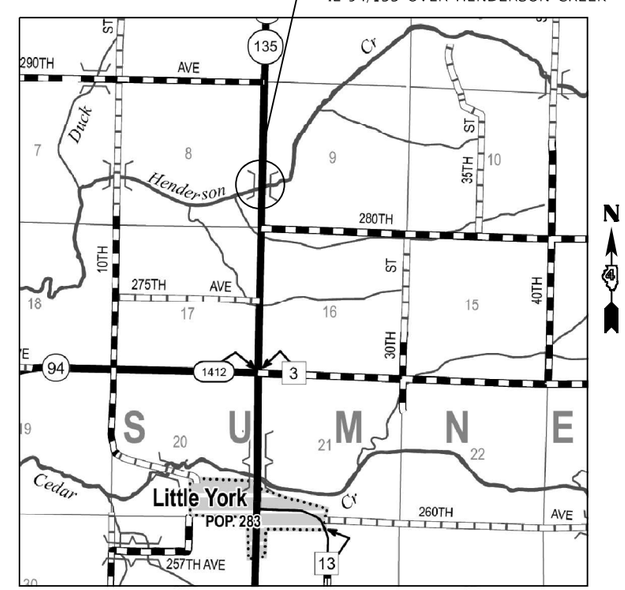

NOT TO SCALE

MODEL: Default
FILE NAME: P:\2023\23098AID - Bridge Painting (FY 2023)\4 CADD - DWG\4.7 Trans\Sheets\0468J34\0468J34-sht-loc-map.dgn

TWM ENGINEERING GEOSPATIAL SERVICES	TWM, INC. WWW.TWM-INC.COM IL DESIGN FIRM LICENSE NO: 184-001220	USER NAME = dlee	DESIGNED - JCL	REVISED -	STATE OF ILLINOIS DEPARTMENT OF TRANSPORTATION	LOCATION MAP STRUCTURE LOCATIONS 1, 2, 3, 4, 5 & 6	F.A. RTE.	SECTION	COUNTY	TOTAL SHEETS	SHEET NO.
			DRAWN - JCL	REVISED -			VAR	D4 BRIDGE PAINTING 2025	*	52	5
		PLOT SCALE = 40.0000 ' / in.	CHECKED - TBP	REVISED -			* HENDERSON, MCDONOUGH, MERCER, WARREN		CONTRACT NO. 68J34		
		PLOT DATE = 8/6/2024	DATE - JULY 2024	REVISED -		SCALE: NTS / SHEET 1 OF 1 SHEETS / STA. TO STA.		ILLINOIS	FED. AID PROJECT		

LEGEND

1. EXISTING PCC BRIDGE DECK, 7 1/2"
2. EXISTING PCC BRIDGE DECK, 8"
3. TEMPORARY CONCRETE BARRIER
4. WHITE TEMPORARY PAVEMENT MARKING TAPE, 5"
5. EXISTING PAVEMENT MARKING
6. EXISTING PCC BRIDGE DECK, 7.67'

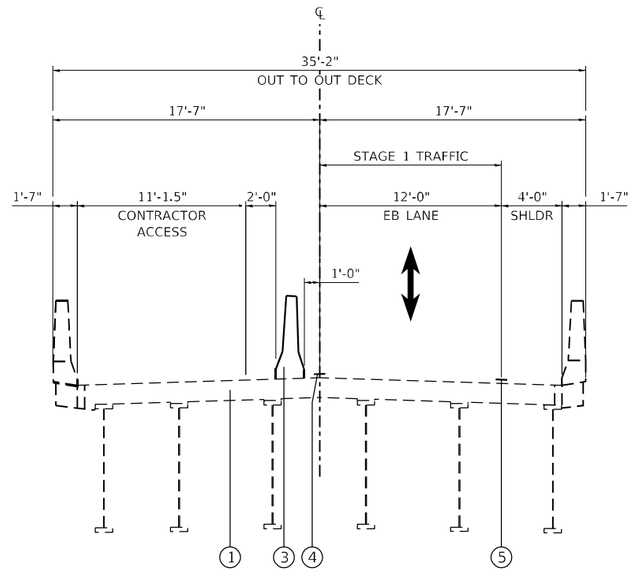

STAGE 1 TYPICAL SECTION

LOCATION 1 – IL 96 / WEAVER CREEK (LOOKING EAST)

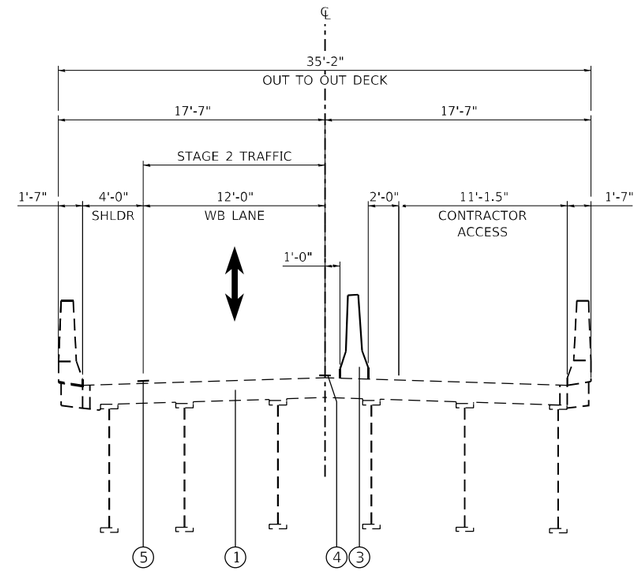

STAGE 2 TYPICAL SECTION

LOCATION 1 – IL 96 / WEAVER CREEK (LOOKING EAST)

NOTES

1. TRAFFIC CONTROL AND PROTECTION SHALL BE ACCORDING TO HIGHWAY STANDARD 701321

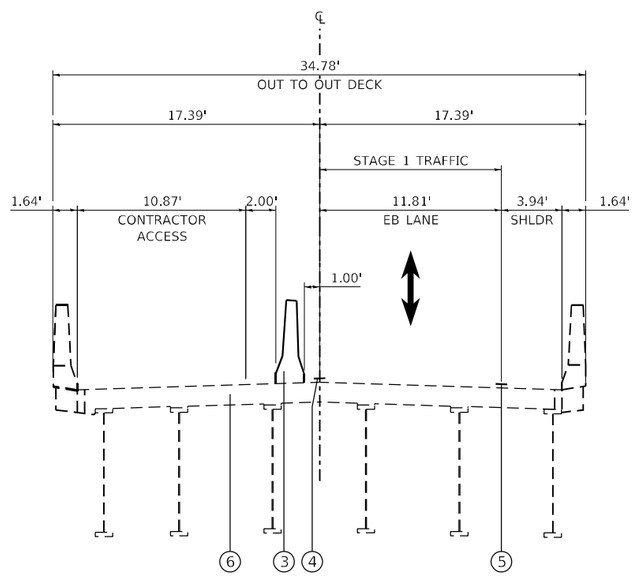

STAGE 1 TYPICAL SECTION

LOCATION 2 – IL 9 / BAPTIST CREEK (LOOKING EAST)

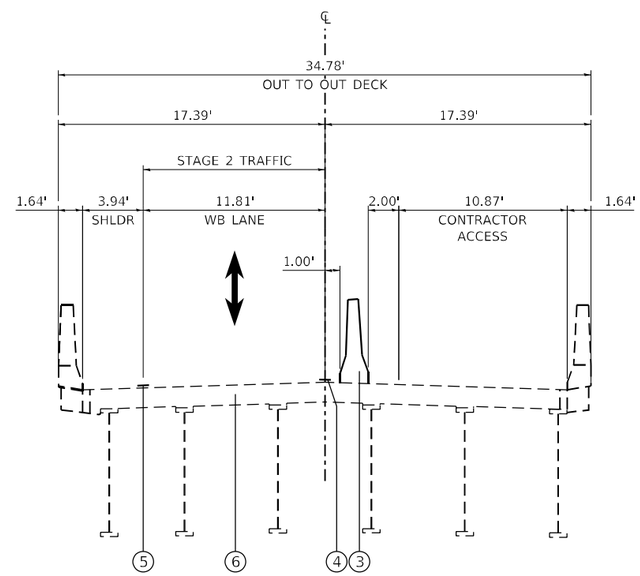

STAGE 2 TYPICAL SECTION

LOCATION 2 – IL 9 / BAPTIST CREEK (LOOKING EAST)

NOTES

1. TRAFFIC CONTROL AND PROTECTION SHALL BE ACCORDING TO HIGHWAY STANDARD 701321

MODEL: Default
FILE NAME: P:\2023\23098410 - Bridge Painting LFY 2025\4 CADD - DWG\4.7 TranSheets\D4683410468134-ctlr-traffic control typ.dgn

TWM ENGINEERING GEOSPATIAL SERVICES	TWM, INC. WWW.TWM-INC.COM IL DESIGN FIRM LICENSE NO: 184-001220	USER NAME = dlee	DESIGNED - JCL	REVISED -	STATE OF ILLINOIS DEPARTMENT OF TRANSPORTATION	STAGE 1 & 2 – STAGING TYPICAL SECTIONS STRUCTURE LOCATIONS 1 & 2	F.A. RTE.	SECTION	COUNTY	TOTAL SHEETS / SHEET NO.
			DRAWN - JCL	REVISED -			VAR	D4 BRIDGE PAINTING 2025	*	52 / 6
		PLOT SCALE = 10.0000 ' / in.	CHECKED - TBP	REVISED -			* HENDERSON, MCDONOUGH, MERCER, WARREN		CONTRACT NO. 68J34	
		PLOT DATE = 8/14/2024	DATE - JULY 2024	REVISED -		SCALE: 1"=5' SHEET 1 OF 7 SHEETS STA. TO STA.			ILLINOIS FED. AID PROJECT	

LEGEND

1. EXISTING PCC BRIDGE DECK, 7 1/2"
2. EXISTING PCC BRIDGE DECK, 8"
3. TEMPORARY CONCRETE BARRIER
4. WHITE TEMPORARY PAVEMENT MARKING TAPE, 5"
5. EXISTING PAVEMENT MARKING
6. EXISTING PCC BRIDGE DECK, 7.67'

NOTES

1. TRAFFIC CONTROL AND PROTECTION FOR STAGE 1 AND 2 SHALL BE PAID FOR AS TRAFFIC CONTROL AND PROTECTION STANDARD 701402 (SPECIAL).

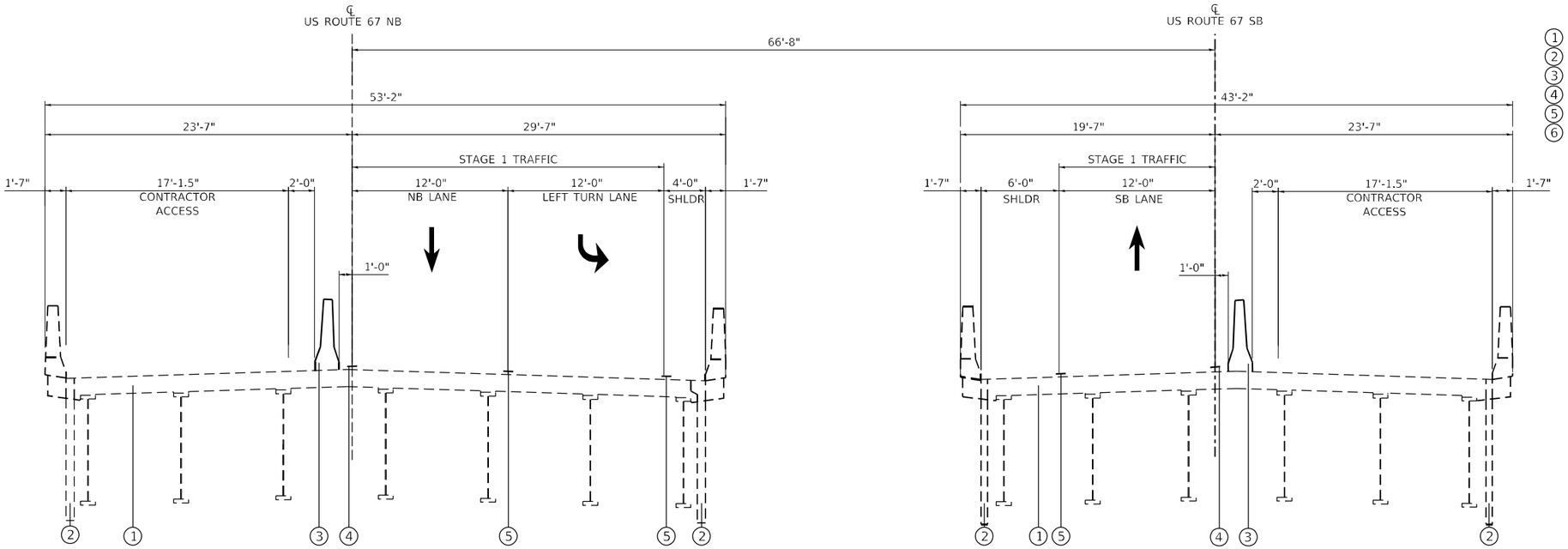

NORTHBOUND (LOOKING SOUTH)

STAGE 1 TYPICAL SECTION

LOCATION 3 /4 – US 67 OVER FARMERS FORK

SOUTHBOUND (LOOKING SOUTH)

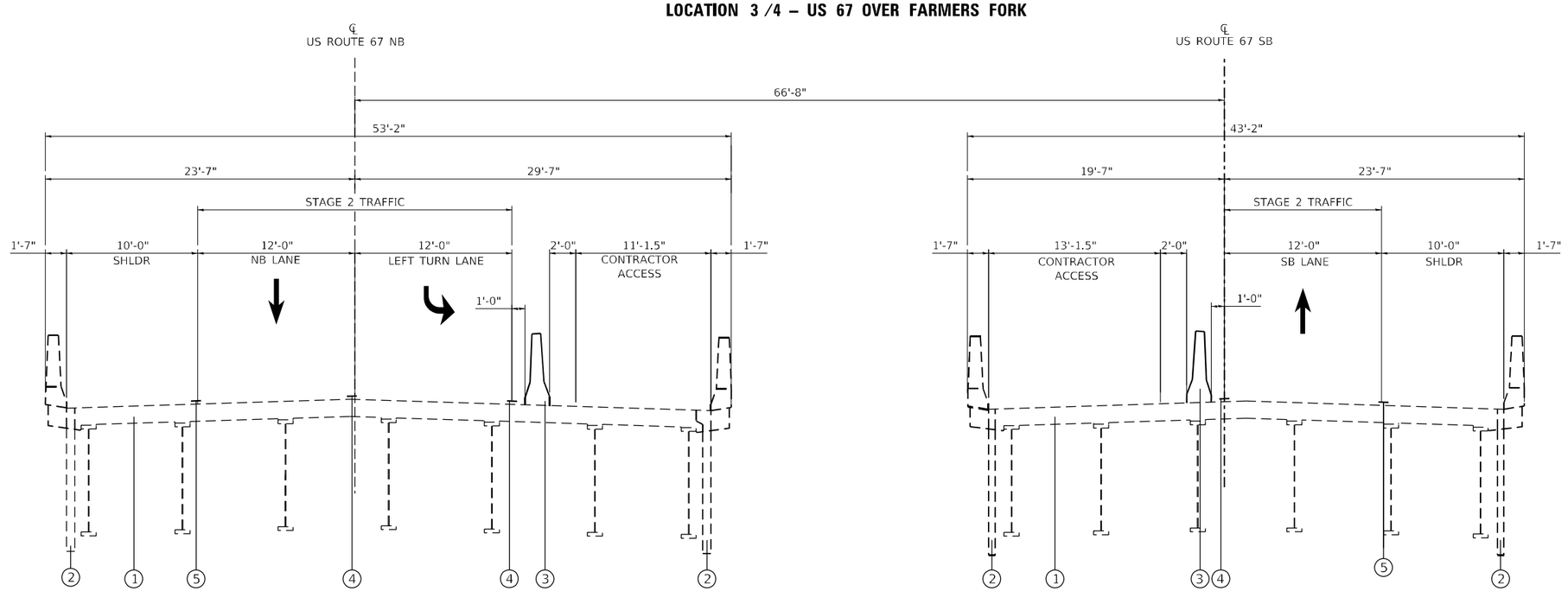

NORTHBOUND (LOOKING SOUTH)

STAGE 2 TYPICAL SECTION

LOCATION 3 /4 – US 67 OVER FARMERS FORK

SOUTHBOUND (LOOKING SOUTH)

MODEL: Default
FILE NAME: P:\2023\23098AID - Bridge Painting (FY 2023)\4 CADD - DWG\4.7 Traffic\Sheets\0468J34\0468J34-sht-traffic_control_typs.dgn

TWM ENGINEERING GEOSPATIAL SERVICES	TWM, INC. WWW.TWM-INC.COM IL DESIGN FIRM LICENSE NO: 184-001220	USER NAME = dlee	DESIGNED - JCL	REVISED -
			DRAWN - JCL	REVISED -
		PLOT SCALE = 10.0000 ' / in.	CHECKED - TBP	REVISED -
		PLOT DATE = 8/14/2024	DATE - JULY 2024	REVISED -

STATE OF ILLINOIS
DEPARTMENT OF TRANSPORTATION

STAGE 1 & 2 – STAGING TYPICAL SECTIONS
STRUCTURE LOCATIONS 3 & 4

SCALE: 1"=5' | SHEET 2 OF 7 SHEETS | STA. | TO STA.

F.A. RTE.	SECTION	COUNTY	TOTAL SHEETS	SHEET NO.
VAR	D4 BRIDGE PAINTING 2025	*	52	7
* HENDERSON, MCDONOUGH, MERCER, WARREN		CONTRACT NO. 68J34		
		ILLINOIS	FED. AID PROJECT	

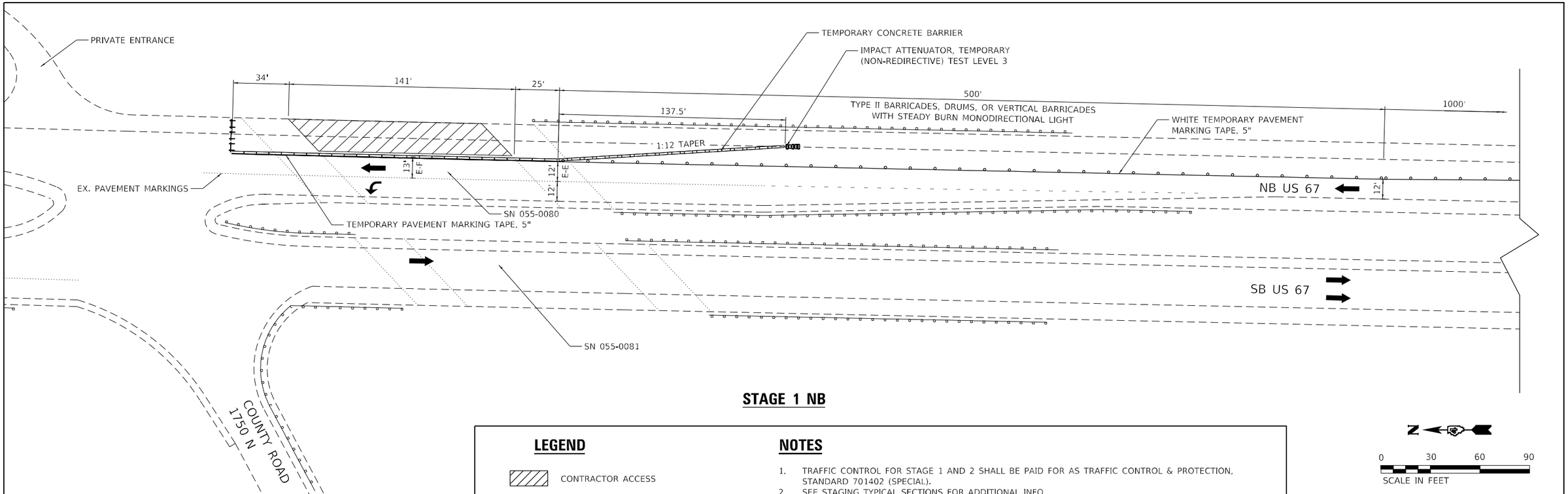

STAGE 1 NB

LEGEND

- CONTRACTOR ACCESS
- TEMPORARY CONCRETE BARRIER
- TEMPORARY IMPACT ATTENUATOR
- DIRECTION OF TRAFFIC
- TYPE III BARRICADE WITH FLASHING LIGHTS

NOTES

1. TRAFFIC CONTROL FOR STAGE 1 AND 2 SHALL BE PAID FOR AS TRAFFIC CONTROL & PROTECTION, STANDARD 701402 (SPECIAL).
2. SEE STAGING TYPICAL SECTIONS FOR ADDITIONAL INFO.
3. SEE HIGHWAY STANDARD 701402 FOR ADDITIONAL TRAFFIC CONTROL DETAILS.
4. SEE SPECIAL PROVISIONS FOR ADDITIONAL TRAFFIC CONTROL ITEMS.
5. TRAFFIC CONTROL MAY BE ADJUSTED DUE TO FIELD CONDITIONS AS APPROVED BY THE ENGINEER.

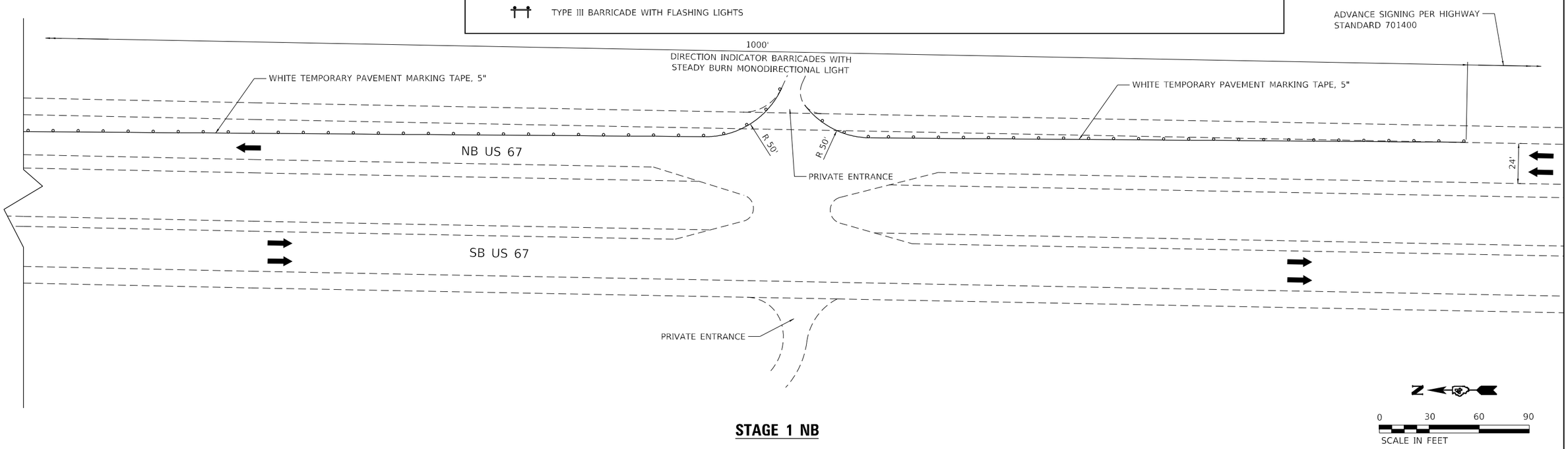

STAGE 1 NB

TWM ENGINEERING GEOSPATIAL SERVICES	TWM, INC. WWW.TWM-INC.COM IL DESIGN FIRM LICENSE NO: 184-001220	USER NAME = dlee	DESIGNED - JCL	REVISED -	STATE OF ILLINOIS DEPARTMENT OF TRANSPORTATION	STAGE 1 NB – STAGING PLAN STRUCTURE LOCATIONS 3 & 4	F.A. RTE.	SECTION	COUNTY	TOTAL SHEETS	SHEET NO.
			DRAWN - JCL	REVISED -			VAR	D4 BRIDGE PAINTING 2025	*	52	8
		PLOT SCALE = 60.0000 ' / in.	CHECKED - TBP	REVISED -			* HENDERSON, MCDONOUGH, MERCER, WARREN		CONTRACT NO. 68J34		
		PLOT DATE = 8/14/2024	DATE - JULY 2024	REVISED -		SCALE: 1"=30' SHEET 3 OF 7 SHEETS STA. TO STA.			ILLINOIS FED. AID PROJECT		

MODEL: Default
FILE NAME: P:\2023\23098A10 - Bridge Painting IFY 2025\14 CADD - DWG\47 TranSheets\D468J34\D468J34-sht-traffic control plan 1.dgn

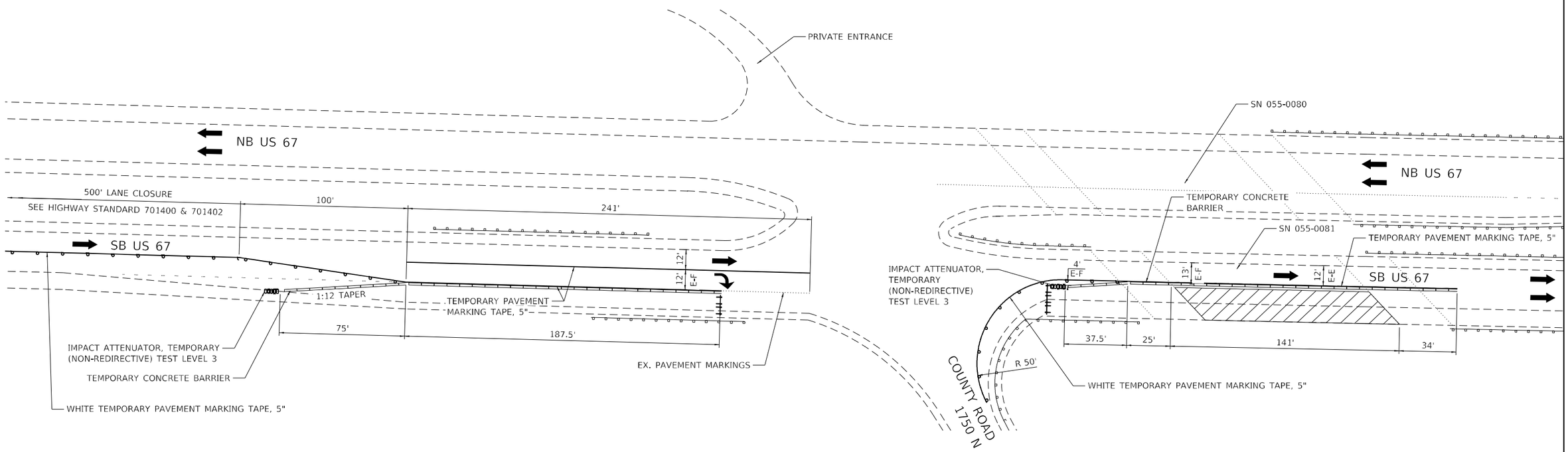

LEGEND

- CONTRACTOR ACCESS
- TEMPORARY CONCRETE BARRIER
- TEMPORARY IMPACT ATTENUATOR
- DIRECTION OF TRAFFIC
- TYPE III BARRICADE WITH FLASHING LIGHTS

NOTES

1. TRAFFIC CONTROL FOR STAGE 1 AND 2 SHALL BE PAID FOR AS TRAFFIC CONTROL & PROTECTION, STANDARD 701402 (SPECIAL).
2. SEE STAGING TYPICAL SECTIONS FOR ADDITIONAL INFO.
3. SEE HIGHWAY STANDARD 701402 FOR ADDITIONAL TRAFFIC CONTROL DETAILS.
4. SEE SPECIAL PROVISIONS FOR ADDITIONAL TRAFFIC CONTROL ITEMS.
5. TRAFFIC CONTROL MAY BE ADJUSTED DUE TO FIELD CONDITIONS AS APPROVED BY THE ENGINEER.

STAGE 1 SB

N

0 30 60 90
SCALE IN FEET

MODEL: Default
FILE NAME: P:\2023\2098AID - Bridge Painting (FY 2023)\4 CADD - DWG\4.7 TranSheets\D468134\D468134-sht-traffic_control_plan_1.2.dgn

TWM ENGINEERING GEOSPATIAL SERVICES	TWM, INC. WWW.TWM-INC.COM IL DESIGN FIRM LICENSE NO: 184-001220	USER NAME = dlee	DESIGNED - JCL	REVISED -	STATE OF ILLINOIS DEPARTMENT OF TRANSPORTATION
			DRAWN - JCL	REVISED -	
		PLOT SCALE = 60.0000 ' / in.	CHECKED - TBP	REVISED -	
		PLOT DATE = 8/14/2024	DATE - JULY 2024	REVISED -	

STAGE 1 SB – STAGING PLAN
STRUCTURE LOCATIONS 3 & 4

SCALE: 1"=30' | SHEET 4 OF 7 SHEETS | STA. | TO STA.

F.A. RTE.	SECTION	COUNTY	TOTAL SHEETS	SHEET NO.
VAR	D4 BRIDGE PAINTING 2025	*	52	9
* HENDERSON, MCDONOUGH, MERCER, WARREN		CONTRACT NO. 68J34		
	ILLINOIS	FED. AID PROJECT		

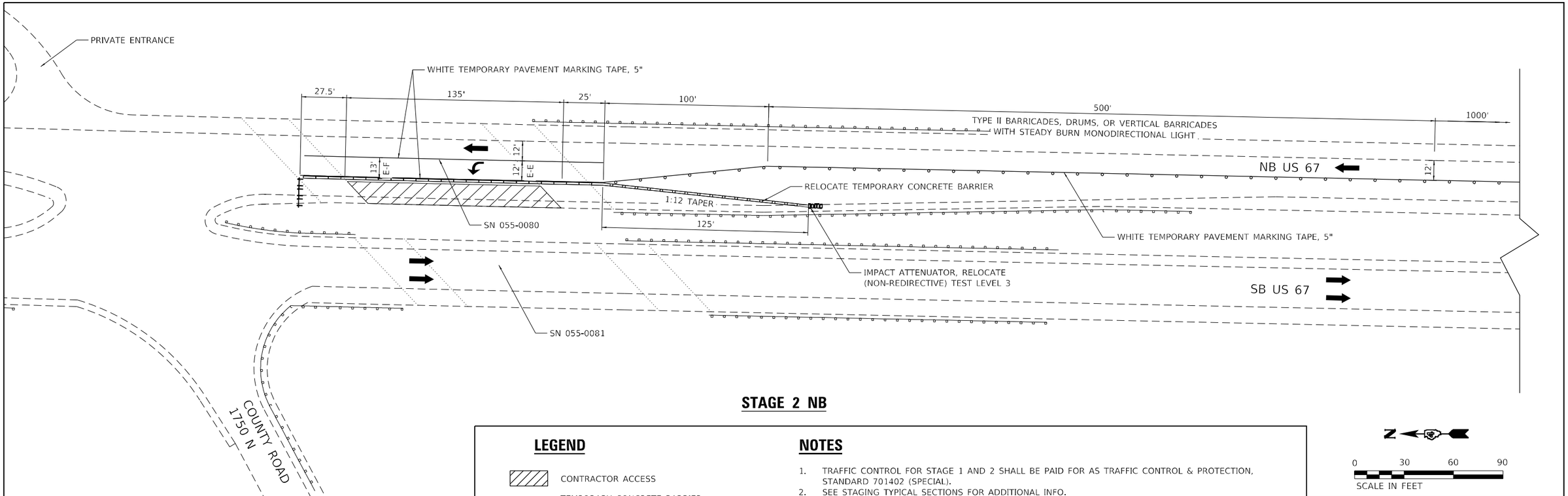

STAGE 2 NB

LEGEND

- CONTRACTOR ACCESS
- TEMPORARY CONCRETE BARRIER
- TEMPORARY IMPACT ATTENUATOR
- DIRECTION OF TRAFFIC
- TYPE III BARRICADE WITH FLASHING LIGHTS

NOTES

1. TRAFFIC CONTROL FOR STAGE 1 AND 2 SHALL BE PAID FOR AS TRAFFIC CONTROL & PROTECTION, STANDARD 701402 (SPECIAL).
2. SEE STAGING TYPICAL SECTIONS FOR ADDITIONAL INFO.
3. SEE HIGHWAY STANDARD 701402 FOR ADDITIONAL TRAFFIC CONTROL DETAILS.
4. SEE SPECIAL PROVISIONS FOR ADDITIONAL TRAFFIC CONTROL ITEMS.
5. TRAFFIC CONTROL MAY BE ADJUSTED DUE TO FIELD CONDITIONS AS APPROVED BY THE ENGINEER.

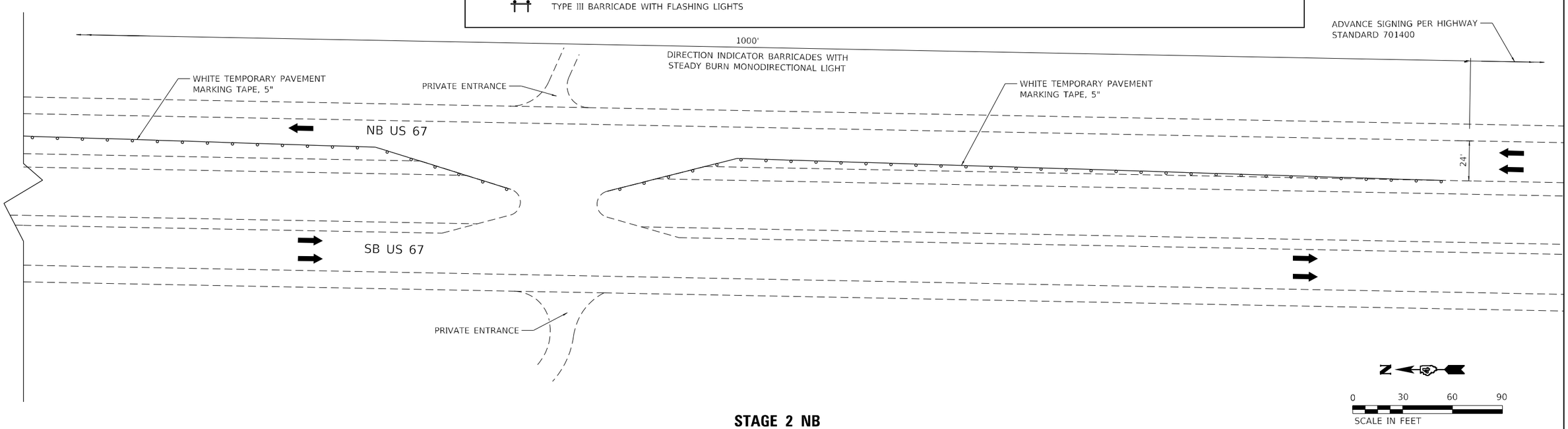

STAGE 2 NB

MODEL: Default
FILE NAME: P:\2023\23098A10 - Bridge Painting IPV 2025\14 CADD - DWG\4.7 TranSheets\D468J34\D468J34-ht-traffic control plan 2.dgn

TWM ENGINEERING GEOSPATIAL SERVICES	TWM, INC. WWW.TWM-INC.COM IL DESIGN FIRM LICENSE NO: 184-001220	USER NAME = dlee	DESIGNED - JCL	REVISED -	STATE OF ILLINOIS DEPARTMENT OF TRANSPORTATION	STAGE 2 NB – STAGING PLAN STRUCTURE LOCATIONS 3 & 4	F.A. RTE.	SECTION	COUNTY	TOTAL SHEETS	SHEET NO.
			DRAWN - JCL	REVISED -			VAR	D4 BRIDGE PAINTING 2025	*	52	10
		PLOT SCALE = 60.0000 ' / in.	CHECKED - TBP	REVISED -			* HENDERSON, MCDONOUGH, MERCER, WARREN		CONTRACT NO. 68J34		
		PLOT DATE = 8/14/2024	DATE - JULY 2024	REVISED -		SCALE: 1"=30' SHEET 5 OF 7 SHEETS STA. TO STA.			ILLINOIS FED. AID PROJECT		

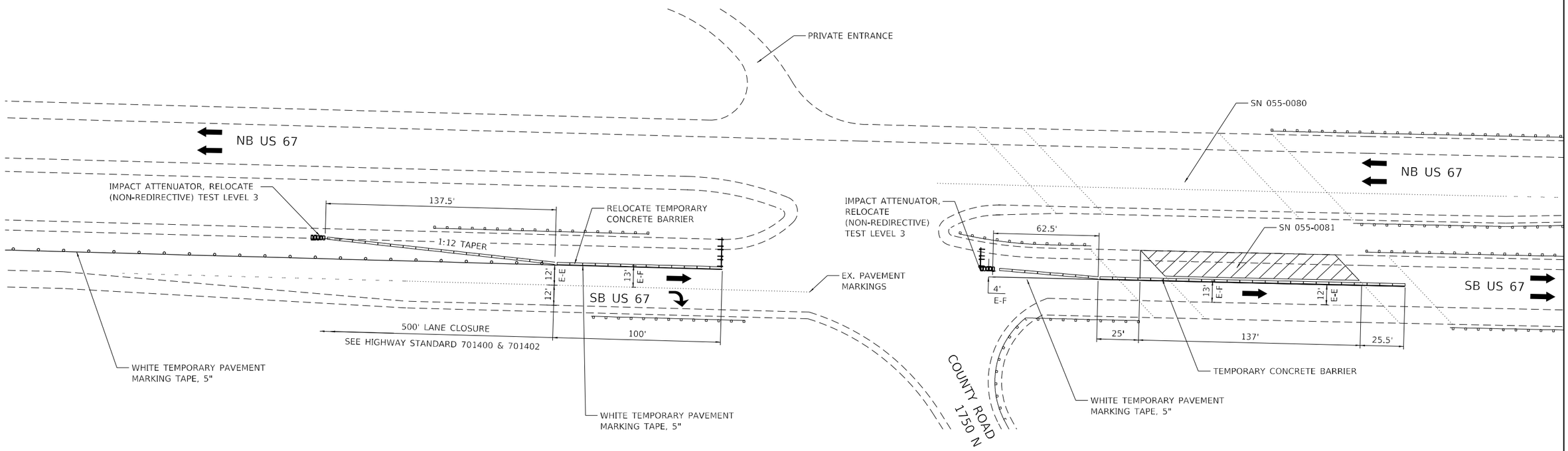

LEGEND

- CONTRACTOR ACCESS
- TEMPORARY CONCRETE BARRIER
- TEMPORARY IMPACT ATTENUATOR
- DIRECTION OF TRAFFIC
- TYPE III BARRICADE WITH FLASHING LIGHTS

NOTES

1. TRAFFIC CONTROL FOR STAGE 1 AND 2 SHALL BE PAID FOR AS TRAFFIC CONTROL & PROTECTION, STANDARD 701402 (SPECIAL).
2. SEE STAGING TYPICAL SECTIONS FOR ADDITIONAL INFO.
3. SEE HIGHWAY STANDARD 701402 FOR ADDITIONAL TRAFFIC CONTROL DETAILS.
4. SEE SPECIAL PROVISIONS FOR ADDITIONAL TRAFFIC CONTROL ITEMS.
5. TRAFFIC CONTROL MAY BE ADJUSTED DUE TO FIELD CONDITIONS AS APPROVED BY THE ENGINEER.

STAGE 2 SB

N

0 30 60 90

SCALE IN FEET

MODEL: Default
FILE NAME: P:\2023\3098410 - Bridge Painting IFY 2025\4 CADD - DWG\4.7 TransSheets\D468J34\D468J34-sht-traffic control plan 2.2.dgn

TWM ENGINEERING GEOSPATIAL SERVICES	TWM, INC. WWW.TWM-INC.COM IL DESIGN FIRM LICENSE NO: 184-001220	USER NAME = dlee	DESIGNED - JCL	REVISED -	STATE OF ILLINOIS DEPARTMENT OF TRANSPORTATION	STAGE 2 SB – STAGING PLAN STRUCTURE LOCATIONS 3 & 4	F.A. RTE.	SECTION	COUNTY	TOTAL SHEETS	SHEET NO.
			DRAWN - JCL	REVISED -			VAR	D4 BRIDGE PAINTING 2025	*	52	11
		PLOT SCALE = 60.0000 ' / in.	CHECKED - TBP	REVISED -			* HENDERSON, MCDONOUGH, MERCER, WARREN		CONTRACT NO. 68J34		
		PLOT DATE = 8/14/2024	DATE - JULY 2024	REVISED -		SCALE: 1"=30' SHEET 6 OF 7 SHEETS STA. TO STA.			ILLINOIS FED. AID PROJECT		

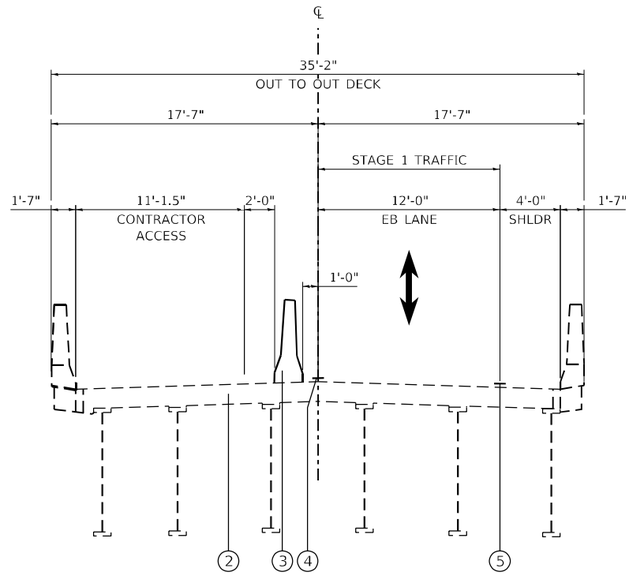

STAGE 1 TYPICAL SECTION

LOCATION 5 – IL 17 /EDWARDS RIVER (LOOKING EAST)

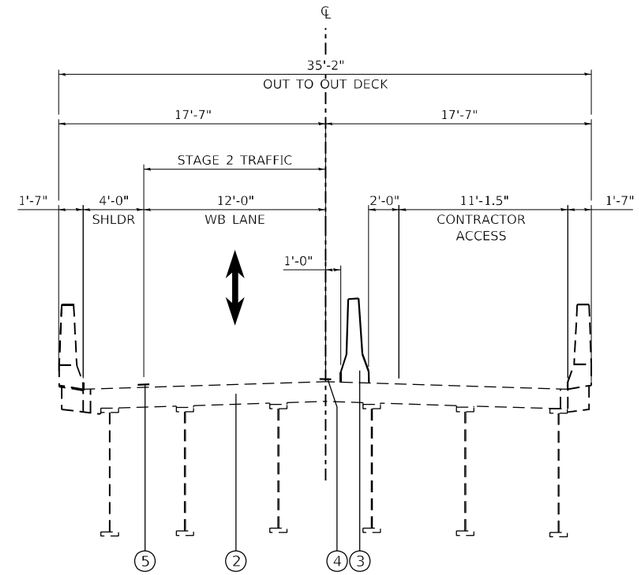

STAGE 2 TYPICAL SECTION

LOCATION 5 – IL 17 /EDWARDS RIVER (LOOKING EAST)

LEGEND

1. EXISTING PCC BRIDGE DECK, 7 1/2"
2. EXISTING PCC BRIDGE DECK, 8"
3. TEMPORARY CONCRETE BARRIER
4. WHITE TEMPORARY PAVEMENT MARKING TAPE, 5"
5. EXISTING PAVEMENT MARKING
6. EXISTING PCC BRIDGE DECK, 7.67'

NOTES

1. TRAFFIC CONTROL AND PROTECTION SHALL BE ACCORDING TO HIGHWAY STANDARD 701321

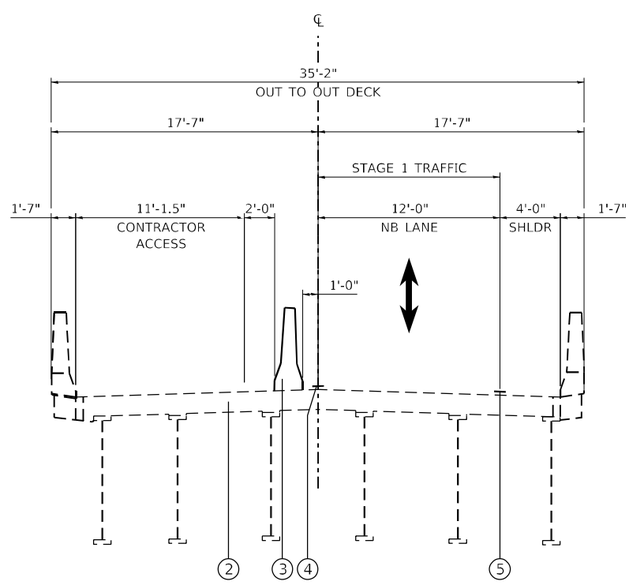

STAGE 1 TYPICAL SECTION

LOCATION 6 – IL 94 & 135 /HENDERSON CREEK (LOOKING NORTH)

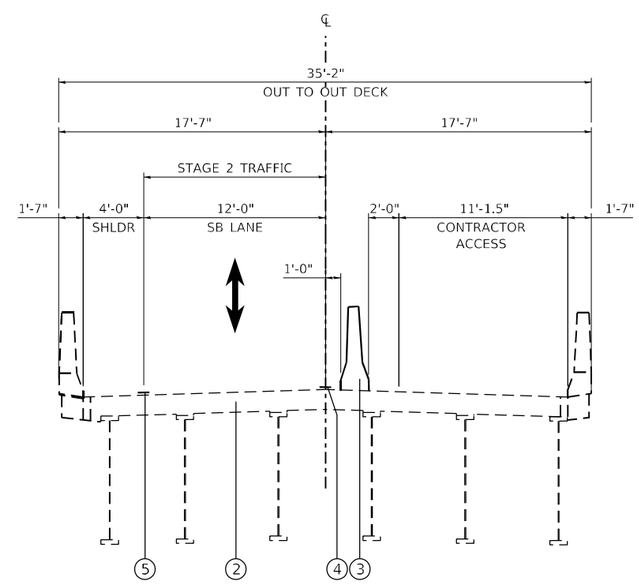

STAGE 2 TYPICAL SECTION

LOCATION 6 – IL 94 & 135 /HENDERSON CREEK (LOOKING NORTH)

NOTES

1. TRAFFIC CONTROL AND PROTECTION SHALL BE ACCORDING TO HIGHWAY STANDARD 701321

MODEL: Default
FILE NAME: P:\2023\23098410 - Bridge Painting FY 2025\4 CADD - DWG\4.7 TranSheets\D468J34\D468J34-cht-traffic_control_typ.dgn

TWM ENGINEERING GEOSPATIAL SERVICES	TWM, INC. WWW.TWM-INC.COM	USER NAME = dlee	DESIGNED - JCL	REVISED -	STATE OF ILLINOIS DEPARTMENT OF TRANSPORTATION	STAGE 1 & 2 – STAGING TYPICAL SECTIONS STRUCTURE LOCATIONS 5 & 6	F.A. RTE.	SECTION	COUNTY	TOTAL SHEETS / SHEET NO.
			DRAWN - JCL	REVISED -			VAR	D4 BRIDGE PAINTING 2025	*	52 / 12
	IL DESIGN FIRM LICENSE NO: 184-001220	PLOT SCALE = 10.0000 ' / in.	CHECKED - TBP	REVISED -			* HENDERSON, MCDONOUGH, MERCER, WARREN		CONTRACT NO. 68J34	
		PLOT DATE = 8/14/2024	DATE - JULY 2024	REVISED -		SCALE: 1"=5' SHEET 7 OF 7 SHEETS STA. TO STA.		ILLINOIS	FED. AID PROJECT	

FOR INFORMATION ONLY
LOCATION 1 (IL 96 OVER WEAVER CREEK)
SN 036–0045

BENCH MARK: U.S.G.S. DATUM CHISELED "□" ON N.E. WINGWALL OF EXIST. STRUCTURE. ELEV. = 533.16

EXISTING STRUCTURE No. 036-0008: BUILT AS S.A. RTE. 4, SECTION 6-B-NRS IN 1934 IS A SINGLE SPAN, STEEL I-BEAM W/ R.C. SLAB BRIDGE, 53.7' BACK TO BACK OF CLOSED ABUTMENTS, 27'-4" WIDE. STRUCTURE TO BE REMOVED USING STAGE CONSTRUCTION, NO SALVAGE.

STATE OF ILLINOIS
DEPARTMENT OF TRANSPORTATION

ROUTE NO.	SECTION	COUNTY	TOTAL SHEETS	SHEET NO.
F.A.P. 522	(6B-3)BR	HENDERSON	103	45
FED. ROAD DIST. NO. 7	ILLINOIS	FED. AID PROJECT		

SHEET NO. 1
SHEETS 19

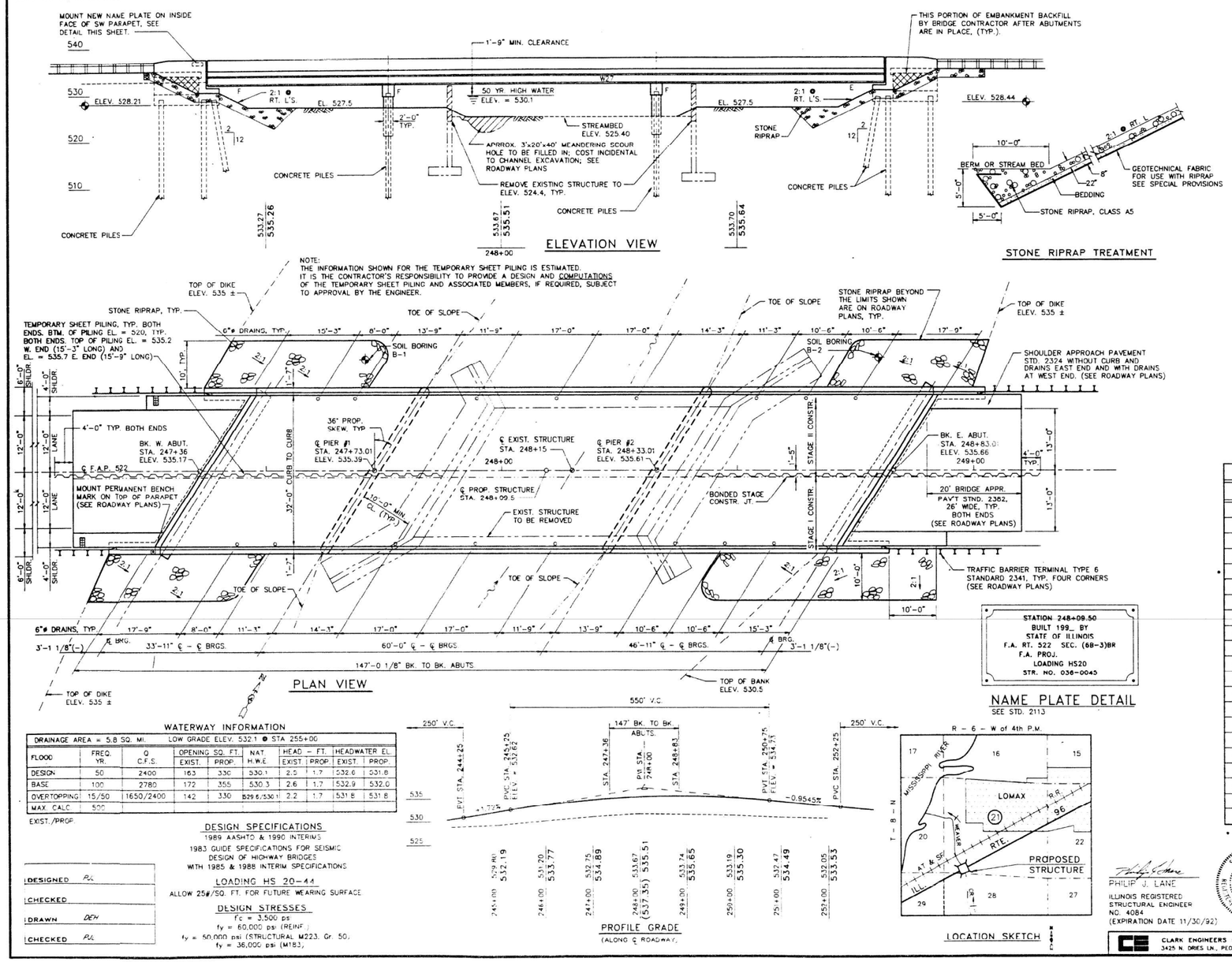

DESIGNED	PJL
CHECKED	
DRAWN	DEW
CHECKED	PJL

GENERAL NOTES

1. FASTENERS SHALL BE HIGH STRENGTH BOLTS. BOLTS 7/8"ø, OPEN HOLES 15/16"ø, UNLESS OTHERWISE NOTED.
2. CALCULATED WEIGHT OF STRUCTURAL STEEL = 75,880 LBS. (M223, GR50) 19,700 LBS. (M183)
3. THE ZINC-SILICATE AND VINYL PAINT SYSTEM SHALL BE USED FOR SHOP AND FIELD PAINTING OF STRUCTURAL STEEL EXCEPT WHERE OTHERWISE NOTED. THE COLOR OF THE VINYL FINISH COAT SHALL BE MUNSELL NO. 10B 3/8 BLUE.
4. FIELD WELDING OF CONSTRUCTION ACCESSORIES WILL NOT BE PERMITTED TO THE BOTTOM FLANGE OF BEAMS OR GIRDERS NOR TO THE TOP FLANGE FOR A DISTANCE EQUAL TO ONE-FOURTH THE SPAN LENGTH EACH WAY FROM THE PIER SUPPORTS. FIELD WELDING IN OTHER AREAS WILL BE PERMITTED ONLY WHEN APPROVED BY THE ENGINEER.
5. ANCHOR BOLTS SHALL BE SET BEFORE BOLTING DIAPHRAGMS OVER SUPPORTS.
6. THE MAIN LOAD CARRYING MEMBER COMPONENTS SUBJECT TO TENSILE STRESS SHALL CONFORM TO THE SUPPLEMENTAL REQUIREMENTS FOR NOTCH TOUGHNESS ZONE 2. THESE COMPONENTS ARE THE WIDE FLANGE BEAMS AND ALL SPLICE PLATE MATERIAL.
7. REINFORCEMENT BARS SHALL CONFORM TO THE REQUIREMENTS OF AASHTO M-31, M-42 OR M-53 GRADE 60.
8. LAYOUT OF SLOPE PROTECTION SYSTEM MAY BE VARIED IN THE FIELD TO SUIT GROUND CONDITIONS AS DIRECTED BY THE ENGINEER.
9. BEARING SEAT SURFACES SHALL BE CONSTRUCTED OR ADJUSTED TO THE DESIGNATED ELEVATIONS WITHIN A TOLERANCE OF 1/8 INCH. ADJUSTMENT SHALL BE MADE EITHER BY GRINDING THE SURFACE OR BY SHIMMING THE BEARING. TWO 1/8" ADJUSTING SHIMS, OF THE DIMENSIONS OF THE BOTTOM BEARING PLATE, SHALL BE PROVIDED FOR EACH BEARING IN ADDITION TO ALL OTHER PLATES OR SHIMS.
10. THE CONTRACTOR SHALL DRIVE 1 CONCRETE TEST PILE, IN A PERMANENT LOCATION AT THE WEST ABUT. AS DIRECTED BY THE ENGINEER BEFORE ORDERING THE REMAINDER OF PILES.
11. BRIDGE SEAT SEALER SHALL BE APPLIED TO THE SEAT AREA OF THE ABUTS. ESTIMATED QUANTITY = 232 SQ. FT.
12. SHOULDER TRANSITION TO WINGWALL SHALL BE SHAPED WITH STONE RIPRAP.

TOTAL BRIDGE BILL OF MATERIAL

ITEM	UNIT	SUPERSTR.	SUBSTR.	TOTAL
REMOVAL OF EXISTING STRUCTURE	EACH	1		1
STRUCTURE EXCAVATION	CU. YD.		231	231
CLASS X CONCRETE	CU. YD.		128.6	128.6
CLASS X CONCRETE SUPERSTRUCTURE	CU. YD.	155.8		155.8
* PROTECTIVE COAT	SQ. YD.	645		645
FLOOR DRAINS	EACH	16		16
BRIDGE DECK GROOVING	SQ. YD.	508		508
NEOPRENE EXPANSION JOINT, 2"	LIN. FT.	83		83
ELASTOMERIC BEARING ASSEMBLY, TYPE II	EACH	6		6
FURNISHING & ERECTING STRUCTURAL STEEL	L. SUM	1		1
STUD SHEAR CONNECTORS	EACH	2754		2754
REINFORCEMENT BARS, EPOXY COATED	LBS.	36,600	12,500	49,100
FURNISHING CONCRETE PILES	LIN. FT.		2,201	2,201
DRIVING CONCRETE PILES	LIN. FT.		2,201	2,201
TEST PILE CONCRETE	EACH		1	1
NAME PLATES	EACH	1		1
BRIDGE SEAT SEALER	L. SUM		1	1
STONE RIPRAP, CLASS A5	SQ. YD.		320	320
FILTER FABRIC FOR USE WITH RIPRAP	SQ. YD.		320	320
TEMPORARY SHEET PILING	SQ. FT.		2408	2408
TEMPORARY BRIDGE RAIL	LIN. FT.	215		215

* PROTECTIVE COAT QUANTITY IS BASED ON APPLICATION TO PARAPETS AND BRIDGE DECK.

PHILIP J. LANE
ILLINOIS REGISTERED STRUCTURAL ENGINEER NO. 4084
(EXPIRATION DATE 11/30/92)

STATE OF ILLINOIS PHILIP J. LANE 4084 STRUCTURAL ENGINEER

10-18-91
DATE

CLARK ENGINEERS INT., INC.
3425 N. DRIES LN., PEORIA, ILLINOIS

GENERAL PLAN AND ELEVATION

ILLINOIS ROUTE 96 OVER
WEAVER CREEK
F.A.P. RTE. 522 SECTION (6B-3)BR
HENDERSON COUNTY
STATION 248+09.5
STRUCTURE NUMBER 036-0045

Rev

MODEL: Default
FILE NAME: P:\0232308AID - Bridge Painting (FY 2023)\4 CADD - DWG\4.7 TranSheets\0468134\0468134-sht-structural detail 1.dgn

TWM
ENGINEERING GEOSPATIAL SERVICES
TWM, INC.
WWW.TWM-INC.COM
IL DESIGN FIRM LICENSE NO: 184-001220

USER NAME = dlee	DESIGNED - JCL	REVISED -	
	DRAWN - JCL	REVISED -	
PLOT SCALE = 10.0000 ' / in.	CHECKED - TBP	REVISED -	
PLOT DATE = 8/6/2024	DATE - JULY 2024	REVISED -	

STATE OF ILLINOIS
DEPARTMENT OF TRANSPORTATION

LOCATION 1 – STRUCTURE INFORMATION
SN 036–0045

SCALE: N/A | SHEET 1 OF 5 SHEETS | STA. TO STA.

F.A. RTE.	SECTION	COUNTY	TOTAL SHEETS	SHEET NO.
VAR	D4 BRIDGE PAINTING 2025	*	52	13
* HENDERSON, MCDONOUGH, MERCER, WARREN		CONTRACT NO. 68J34		
		ILLINOIS	FED. AID PROJECT	

FOR INFORMATION ONLY
LOCATION 1 (IL 96 OVER WEAVER CREEK)
SN 036–0045

STATE OF ILLINOIS
DEPARTMENT OF TRANSPORTATION

ROUTE NO.	SECTION	COUNTY	TOTAL SHEETS	SHEET NO.
S.B.I. 96 F.A. 522	(6B-3)BR	HENDERSON	103	48
FED. ROAD DIST. NO. 7	ILLINOIS	FED. AID PROJECT		

SHEET NO. 4
SHEETS 19

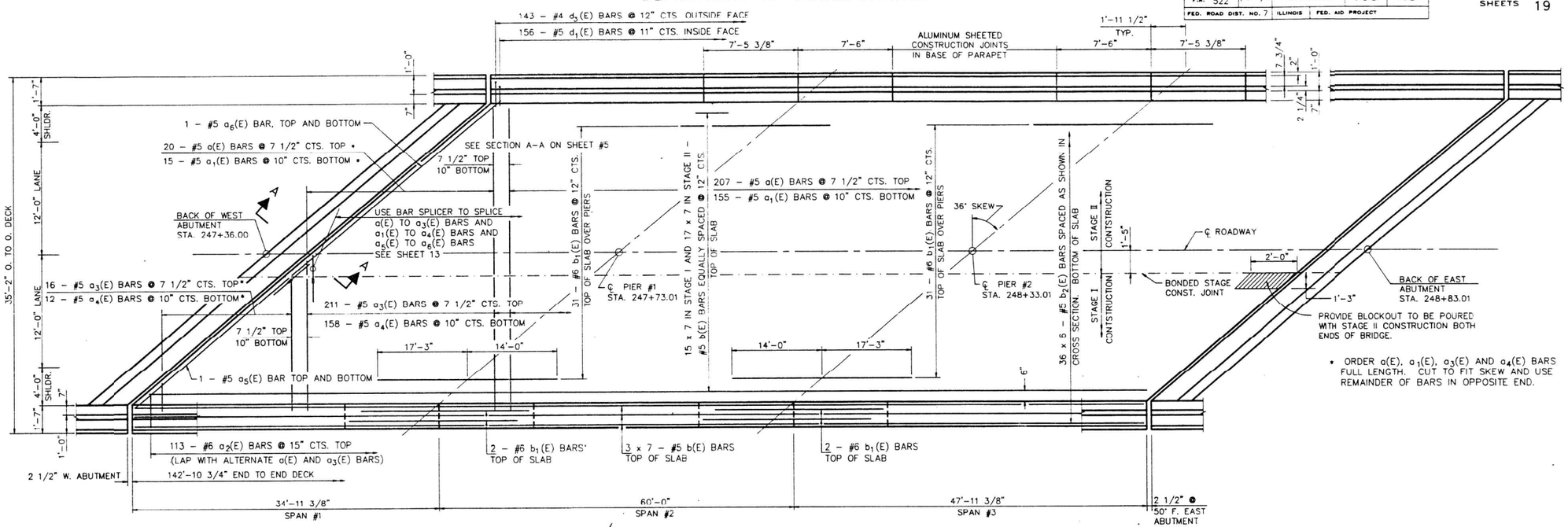

PLAN

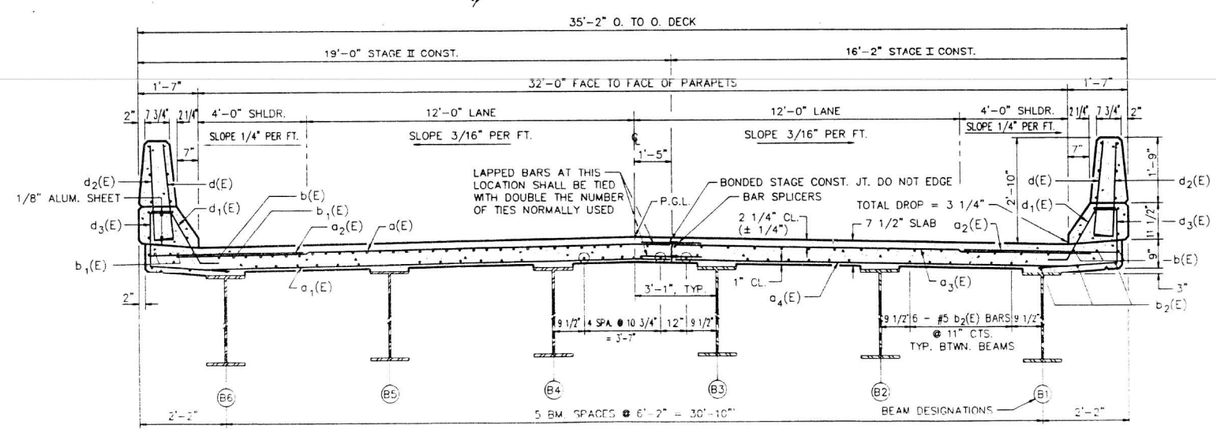

NEAR PIER

NEAR MIDSPAN

CROSS SECTION
(LOOKING EAST)

NOTES: SEE SHEET #5 FOR SUPERSTRUCTURE DETAILS AND BILL OF MATERIAL.
REINFORCEMENT BARS DESIGNATED (E) SHALL BE EXPOXY COATED.
BARS INDICATED THUS 20 x 3 – #5 ETC. INDICATES 20 LINES OF BARS WITH 3 LENGTHS PER LINE.
SEE SHEET #5 FOR PARAPET REINFORCEMENT.
FOR SECTION A–A SEE SHEET #5.
MIN. BAR LAPS
#4 = 1'–8" #7 = 3'–5"
#5 = 2'–2" #8 = 4'–6"
#6 = 2'–7"
SEE SHT. #13 FOR BAR SPLICERS.

DESIGNED	P.J.
CHECKED	
DRAWN	DEH
CHECKED	P.J.

DECK DETAILS
ILLINOIS ROUTE 96 OVER
WEAVER CREEK
F.A.P. RTE. 522 SECTION (6B–3)BR
HENDERSON COUNTY
STATION 248+09.5
STRUCTURE NUMBER 036–0045

FOR INFORMATION ONLY
LOCATION 1 (IL 96 OVER WEAVER CREEK)
SN 036–0045

STATE OF ILLINOIS
DEPARTMENT OF TRANSPORTATION

ROUTE NO.	SECTION	COUNTY	TOTAL SHEETS	SHEET NO.
S.B.I. 96 F.A. 522	(6B-3)BR	HENDERSON	103	49
FED. ROAD DIST. NO. 7	ILLINOIS	FED. AID PROJECT		

SHEET NO. 5
SHEETS 19

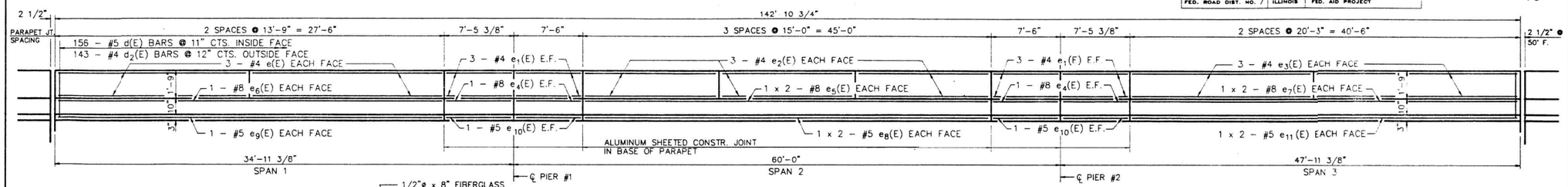

INSIDE ELEVATION OF PARAPET

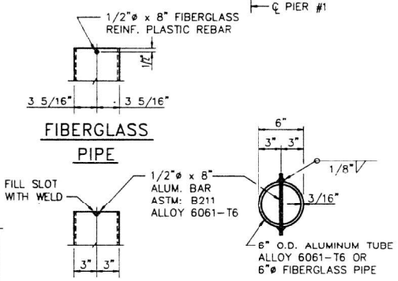

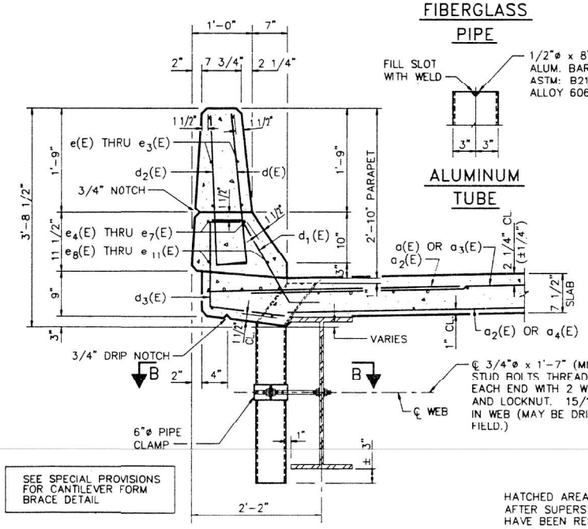

SECTION THRU PARAPET

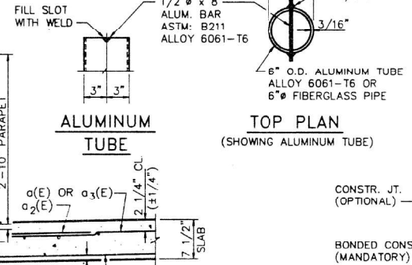

PARAPET JOINT DETAILS

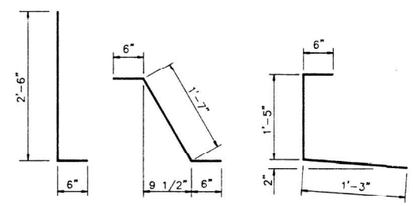

BARS d(E) & d2(E) BAR d1(E) BAR d3(E)

NOTES:

THE EXTERIOR SURFACES OF THE FLOOR DRAIN SHALL BE PAINTED WITH THE VINYL ENAMEL COAT PAINTING SPECIFIED FOR STRUCTURAL STEEL. THE EXTERIOR SURFACE OF THE ALUMINUM TUBE SHALL BE CLEANED AND GIVEN A WASHCOAT PRETREATMENT IN ACCORDANCE WITH STEEL STRUCTURAL PAINTING COUNCIL'S SPEC. SSPC-SPI & SSPC-PAINT 27 PRIOR TO PAINTING. FIBERGLASS TO HAVE PREWASH AS PER MIL-P-15328 PRIOR TO PAINTING.

FIBERGLASS PIPE SHALL CONFORM TO ASTM: D2996, WITH SHORT-TIME RUPTURE STRENGTH HOOP TENSILE STRESS OF 30,000 P.S.I. MINIMUM. THE SURFACE OF THE FIBERGLASS PIPE SHALL BE FREE OF BOND INHIBITING AGENTS.

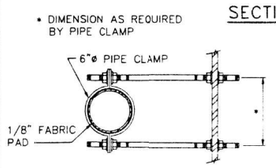

SECTION B-B

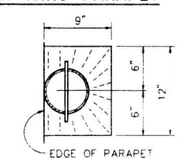

TOP PLAN

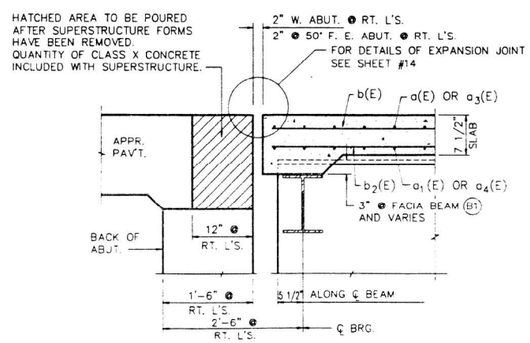

SECTION A-A

SUPERSTRUCTURE BILL OF MATERIAL

BAR	NO.	SIZE	LENGTH	SHAPE
a(E)	227	#5	18'-0"	
a1(E)	170	#5	17'-5"	
a2(E)	226	#6	4'-0"	
a3(E)	227	#5	15'-3"	
a4(E)	170	#5	14'-7"	
a5(E)	4	#5	16'-6"	
a6(E)	4	#5	23'-0"	
b(E)	266	#5	22'-3"	
b1(E)	70	#6	31'-3"	
b2(E)	216	#5	25'-7"	
d(E)	312	#5	3'-0"	
d1(E)	312	#5	2'-7"	
d2(E)	286	#4	3'-0"	
d3(E)	286	#4	3'-2"	
e(E)	24	#4	13'-5"	
e1(E)	48	#4	7'-1"	
e2(E)	36	#4	14'-8"	
e3(E)	24	#4	19'-11"	
e4(E)	16	#8	7'-1"	
e5(E)	8	#8	24'-8	
e6(E)	4	#8	27'-2"	
e7(E)	8	#8	22'-4"	
e8(E)	8	#5	23'-5"	
e9(E)	4	#5	27'-2"	
e10(E)	16	#5	7'-1"	
e11(E)	8	#5	21'-2"	
NEOPRENE EXPANSION JOINT, 2"			LIN. FT.	83
REINFORCEMENT BARS, EPOXY COATED			LBS.	36,600
CLASS X CONCRETE SUPERSTRUCTURE			CU. YDS.	155.8
BRIDGE DECK GROOVING			SQ. YDS.	508

REINFORCEMENT BARS DESIGNATED (E) SHALL BE EPOXY COATED.

BARS INDICATED THUS 1 x 3 - #5 ETC. INDICATES 1 LINE OF BARS WITH 3 LENGTHS PER LINE.

MIN. BAR LAP:
#5 = 2'-2"
#8 = 4'-6"

1029-510 1-1

DECK DETAILS

ILLINOIS ROUTE 96 OVER
WEAVER CREEK
F.A.P. RTE. 522 SECTION (6B-3)BR
HENDERSON COUNTY
STATION 248+09.5
STRUCTURE NUMBER 036-0045

DESIGNED	P.J.
CHECKED	
DRAWN	DEH
CHECKED	P.J.

S-2-D

MODEL: Default
FILE NAME: P:\2023\23098410 - Bridge Painting (FY 2025)\4 CADD - DWG\4.7 Tran\Sheets\D468J34\D468J34-sht-structural detail 1.dgn

TWM ENGINEERING GEOSPATIAL SERVICES
TWM, INC.
WWW.TWM-INC.COM
IL DESIGN FIRM LICENSE NO: 184-001220

USER NAME = dlee	DESIGNED - JCL	REVISED -	
	DRAWN - JCL	REVISED -	
PLOT SCALE = 10.0000 ' / in.	CHECKED - TBP	REVISED -	
PLOT DATE = 8/6/2024	DATE - JULY 2024	REVISED -	

STATE OF ILLINOIS
DEPARTMENT OF TRANSPORTATION

LOCATION 1 – STRUCTURE INFORMATION
SN 036–0045

SCALE: N/A | SHEET 3 OF 5 SHEETS | STA. TO STA.

F.A. RTE.	SECTION	COUNTY	TOTAL SHEETS	SHEET NO.
VAR	D4 BRIDGE PAINTING 2025	*	52	15
* HENDERSON, MCDONOUGH, MERCER, WARREN		CONTRACT NO. 68J34		
		ILLINOIS	FED. AID PROJECT	

FOR INFORMATION ONLY
LOCATION 1 (IL 96 OVER WEAVER CREEK)
SN 036–0045

STATE OF ILLINOIS
DEPARTMENT OF TRANSPORTATION

ROUTE NO.	SECTION	COUNTY	TOTAL SHEETS	SHEET NO.
S.B.I. 96 F.A. 522	(6B-3)BR	HENDERSON	103	50
FED. ROAD DIST. NO. 7	ILLINOIS	FED. AID PROJECT		

SHEET NO. 6
SHEETS 19

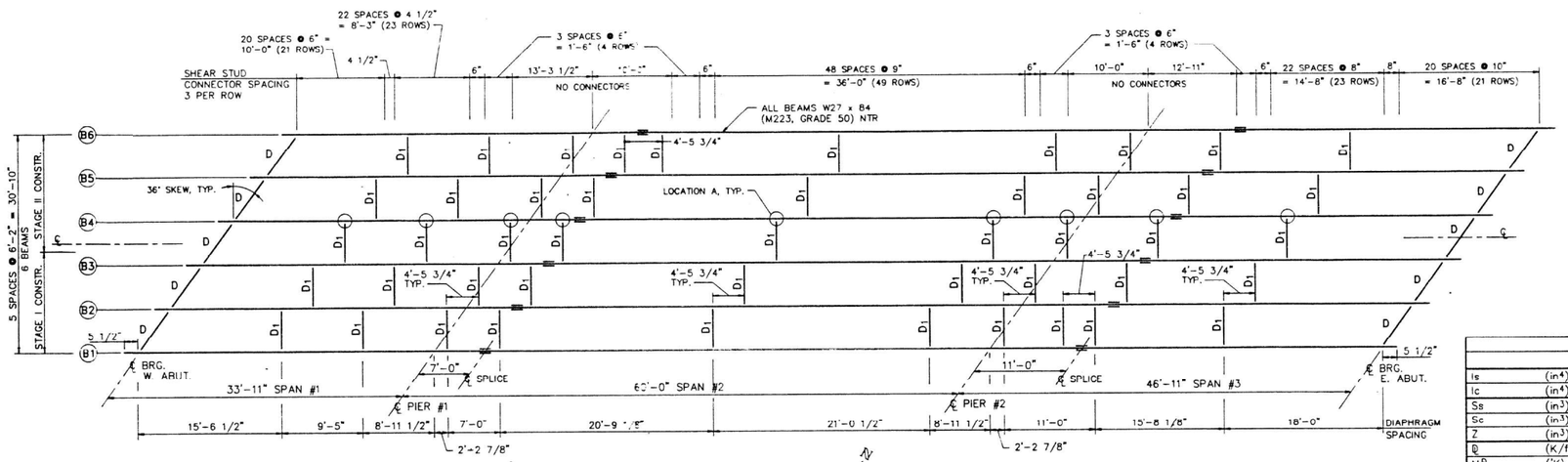

BEAM LAYOUT

TOP OF BEAM ELEVATIONS (FOR FABRICATION)						
BEAM	B1	B2	B3	B4	B5	B6
W. ABUT. BRG.	534.13	534.28	534.37	534.44	534.37	534.28
PIER #1 BRG.	534.35	534.49	534.56	534.56	534.56	534.47
SPLICE IN SPAN #2	534.40	534.53	534.60	534.58	534.60	534.51
PIER #2 BRG.	534.60	534.73	534.84	534.84	534.76	534.65
SPLICE IN SPAN #3	534.64	534.77	534.89	534.89	534.79	534.68
E. ABUT. BRG.	534.68	534.80	534.89	534.89	534.80	534.68

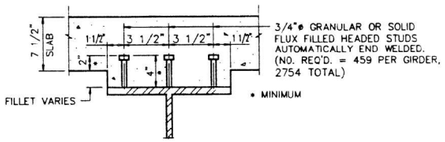

SHEAR STUDS

INTERIOR BEAM MOMENT TABLE						
		0.4 SP. 1	PIER #1	0.5 SP. 2	PIER #2	0.6 SP. 3
Is	(in⁴)	2850	2850	2850	2850	2850
Ic	(in⁴)	8613		8613		8613
Ss	(in³)	213	213	213	213	213
Sc	(in³)	333		333		333
Z	(in³)		244		244	
wℓ	(K/ft.)	0.70	0.97	0.70	0.97	0.70
Mℓ	('K)	34	218	124	274	101
swℓ	(K/ft.)	0.27		0.27		0.27
Msℓ	('K)	18		65		46
Mℓ	('K)	165	140	335	149	271
M (IMP)	('K)	50	41	90	42	79
5/3(Mℓ+I)	('K)	358	302	708	318	583
Ma	('K)	533	676	1166	770	949
Mu	('K)	1882	1017	1882	1017	1882
fsℓ NON-COMP	(k.s.i.)	1.9	12.3	7.0	15.4	5.7
fsℓ (COMP)	(k.s.i.)	0.6		2.3		1.7
fs5/3(ℓ+I)	(k.s.i.)	12.9	17.0	25.5	17.9	21.0
fs (OVERLOAD)	(k.s.i.)	15.4	29.3	34.8	33.3	28.4
VR	(K)	41.7		39		43.9

INTERIOR BEAM REACTION TABLE					
		W. ABUT.	PIER #1	PIER #2	E. ABUT.
Rℓ	(K)	10.0	50.8	58.4	16.9
RI	(K)	27.5	38.7	38.0	30.6
IMP.	(K)	8.2	11.2	10.6	8.9
R (TOTAL)	(K)	45.7	100.7	107.0	56.4

Is AND Ss ARE THE MOMENT OF INERTIA AND SECTION MODULUS OF THE STEEL SECTION USED IN COMPUTING fs (TOTAL AND OVERLOAD).

Ic AND Sc ARE THE MOMENT OF INERTIA AND SECTION MODULUS OF THE COMPOSITE SECTION USED IN COMPUTING fs (TOTAL AND OVERLOAD).

VR IS THE MAXIMUM LIVE LOAD + IMPACT SHEAR RANGE IN SPAN.

Z IS THE PLASTIC SECTION MODULUS USED TO DETERMINE THE FULLY PLASTIC MOMENTS IN THE NON-COMPOSITE AREAS.

Ma (APPLIED MOMENT) = 1.3[Mℓ + Msℓ + 5/3(MI + I)].

Mu IS THE FULL PLASTIC MOMENT CAPACITY FOR COMPACT, BRACED SECTION.

fs (OVERLOAD) IS THE SUM OF THE STRESSES DUE TO Mℓ + Msℓ + 5/3(MI + I).

fs (TOTAL) (NON-COMPACT SECTION) IS THE SUM OF THE STRESSES DUE TO 1.3[Mℓ + Msℓ + 5/3(MI + I)].

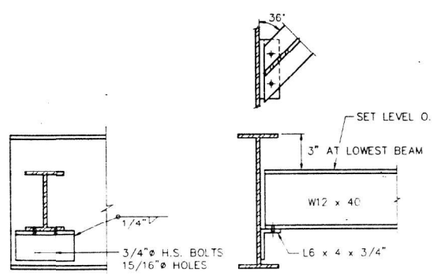

DIAPHRAGM D
10 REQUIRED

NOTE. TWO HARDENED WASHERS SHALL BE REQUIRED OVER ALL OVERSIZE HOLES FOR DIAPHRAGMS.

3/4"ø H.S. BOLTS 15/16"ø HOLES, TYP.; EXCEPT USE VERTICAL LONG SLOTTED HOLES (13/16" WIDE x 1 7/8" HIGH) IN Z4x4x1/2 AT BEAM (D4) THESE SLOTTED HOLES SHALL HAVE 5/16 INCH STRUCTURAL PLATE WASHER PLACED OVER THEM. THE BOLTS FOR THE SLOTTED HOLES SHALL BE FINGER-TIGHTENED PRIOR TO THE DECK SLAB POURING AND THEN BE FULLY-TIGHTENED AFTER COMPLETION OF THE POURING

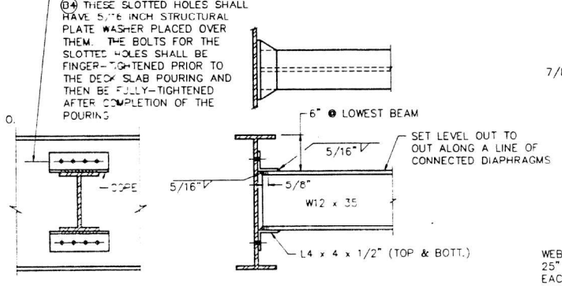

DIAPHRAGM D1
47 REQUIRED

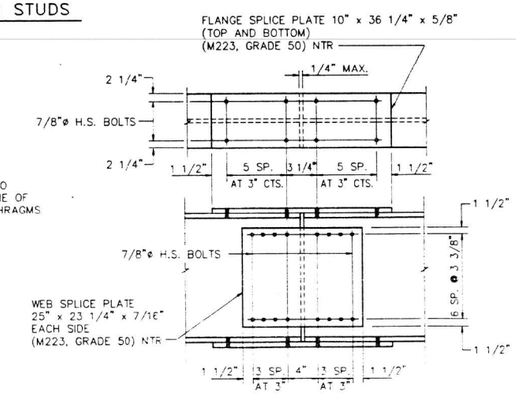

SPLICE
12 REQUIRED

DESIGNED	FJ
CHECKED	
DRAWN	JEF
CHECKED	PJL

1-2-D

BEAM DETAILS

ILLINOIS ROUTE 96 OVER
WEAVER CREEK
F.A.P. RTE. 522 SECTION (6B-3)BR
HENDERSON COUNTY
STATION 248+09.5
STRUCTURE NUMBER 036-0045

MODEL: Default
FILE NAME: P:\2023\23098410 - Bridge Painting (FY 2025)\4 CADD - DWG\4.7 TransSheets\D46B34\D46B34-dht-structural detail 1.dgn

TWM ENGINEERING GEOSPATIAL SERVICES
TWM, INC.
www.TWM-INC.COM
IL DESIGN FIRM LICENSE NO: 184-001220

USER NAME = dlee	DESIGNED - JCL	REVISED -	
	DRAWN - JCL	REVISED -	
PLOT SCALE = 10.0000 ' / in.	CHECKED - TBP	REVISED -	
PLOT DATE = 8/6/2024	DATE - JULY 2024	REVISED -	

STATE OF ILLINOIS
DEPARTMENT OF TRANSPORTATION

LOCATION 1 – STRUCTURE INFORMATION
SN 036–0045

SCALE: N/A | SHEET 4 OF 5 SHEETS | STA. TO STA.

F.A. RTE.	SECTION	COUNTY	TOTAL SHEETS	SHEET NO.
VAR	D4 BRIDGE PAINTING 2025	*	52	16
* HENDERSON, MCDONOUGH, MERCER, WARREN		CONTRACT NO. 68J34		
		ILLINOIS	FED. AID PROJECT	

FOR INFORMATION ONLY
LOCATION 1 (IL 96 OVER WEAVER CREEK)
SN 036-0045

STATE OF ILLINOIS
DEPARTMENT OF TRANSPORTATION

ROUTE NO.	SECTION	COUNTY	TOTAL SHEETS	SHEET NO.
S.B.I. 96 / F.A. 522	(6B-3)BR	HENDERSON	103	55
FED. ROAD DIST. NO. 7	ILLINOIS	FED. AID PROJECT		

SHEET NO. 11
SHEETS 19

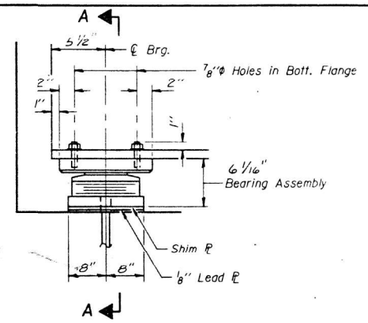

ELEVATION AT E. ABUT.
(6 Required)

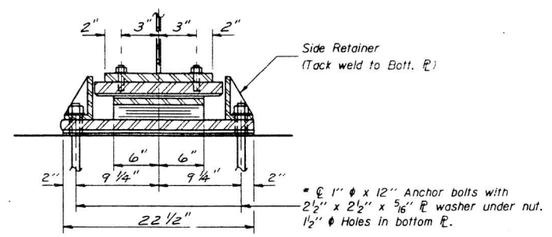

SECTION A-A

TYPE II TFE ELASTOMERIC EXP. BRG.

* Notes: Anchor bolts at fixed bearings may be built into the masonry.
See sheet #12 for Anchor Bolt installation.

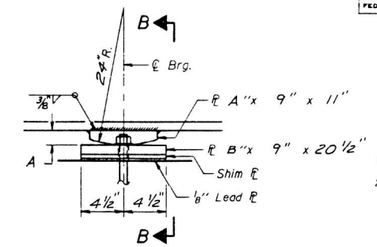

ELEVATION AT PIERS & W. ABUT

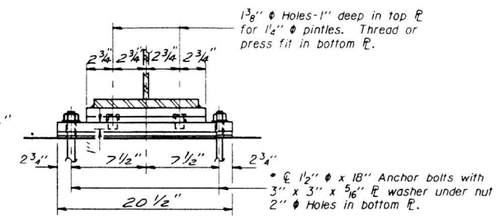

SECTION B-B

FIXED BEARING
(18 Required)

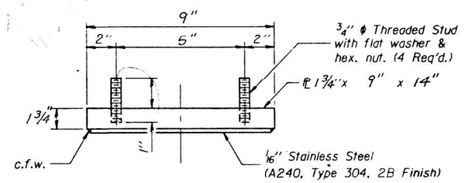

TOP BEARING ASSEMBLY

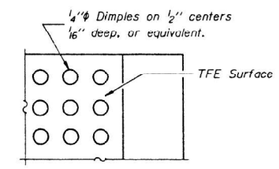

PLAN-TFE SURFACE

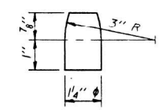

PINTLE

LOCATION	A TOP PLATE	B BTM. PLATE
W. ABUT.	1"	1 1/4"
Pier #1	1 5/8"	1 5/8"
Pier #2	1 5/8"	1 5/8"

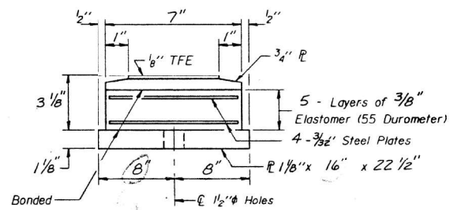

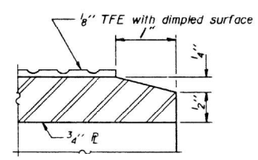

SECTION THRU TFE

West Abut [illegible]
[illegible]

BOTTOM BEARING ASSEMBLY

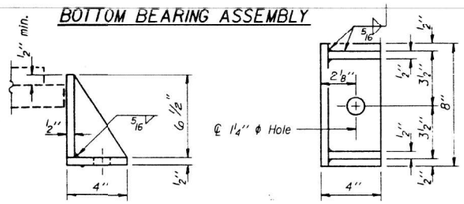

SIDE RETAINER

Equivalent rolled angle with stiffeners will be allowed in lieu of welded plates.

Note: The 1/8" TFE sheet shall be bonded directly to the top steel plate with a two-component, medium viscosity epoxy resin, conforming to the requirements of the Federal Specification MMM-A-134, Type I. The bond agent shall be applied on the full area of the contact surfaces.

Bonding of 1/8" TFE sheet during vulcanizing process will be permitted provided the process and method of adjusting assembly height is approved by the Engineer.

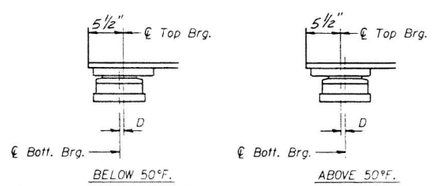

BELOW 50°F.
(Move bott. brg. away from fixed brg.)

ABOVE 50°F.
(Move bott. brg. toward fixed brg.)

SETTING ANCHOR BOLTS AT EXP. BRG.

D=1/8" per each 100' of expansion for every 15° temp. change from the normal temp. of 50°F.

BILL OF MATERIAL

Item	Unit	Total
Elastomeric Bearing Assembly Type II	Each	6

DESIGNED	PJL
CHECKED	
DRAWN	D.E.H.
CHECKED	

I-2-E2 12-1-83

BEARINGS
ILLINOIS ROUTE 96 OVER
WEAVER CREEK
F.A.P. RTE. 522 SECTION (6B-3)BR
HENDERSON COUNTY
STATION 248+09.5
STRUCTURE NUMBER 036-0045

MODEL: Default
FILE NAME: P:\2023\23098\D - Bridge Painting LFY 2023\4 CADD - DWG\4.7 Tran\Sheets\D468134\D468134-sht-structural detail 1.dgn

TWM ENGINEERING GEOSPATIAL SERVICES
TWM, INC.
WWW.TWM-INC.COM
IL DESIGN FIRM LICENSE NO: 184-001220

USER NAME = dlee	DESIGNED - JCL	REVISED -	
	DRAWN - JCL	REVISED -	
PLOT SCALE = 10.0000 ' / in.	CHECKED - TBP	REVISED -	
PLOT DATE = 8/6/2024	DATE - JULY 2024	REVISED -	

STATE OF ILLINOIS
DEPARTMENT OF TRANSPORTATION

LOCATION 1 – STRUCTURE INFORMATION
SN 036-0045

SCALE: N/A | SHEET 5 OF 5 SHEETS | STA. TO STA.

F.A. RTE.	SECTION	COUNTY	TOTAL SHEETS	SHEET NO.
VAR	D4 BRIDGE PAINTING 2025	*	52	17
* HENDERSON, MCDONOUGH, MERCER, WARREN		CONTRACT NO. 68J34		
		ILLINOIS	FED. AID PROJECT	

FOR INFORMATION ONLY
LOCATION 2 (IL 9 OVER BAPTIST CREEK)
SN 055–0042

ROUTE NO.	SECTION	COUNTY	TOTAL SHEETS	SHEET NO.
F.A.P. 685	(119B)BR-1	McDONOUGH	57	11
FED. ROAD DIST. NO. 7		ILLINOIS	FED. AID PROJECT-	

Sheet 1 of 20

Benchmark: Chisled "□" on Southeast Wingwall of Existing Structure: 5.3 m Rt. Sta. 8+046.50 Elev. 219.739

Existing Structure: S.N. 055-0013 Single Span 8.62 m bk. to bk. Abut., 9.81 m o.-o. slab bridge on closed concrete abutments. Built as SBI Route 95, Section 119B at Sta. 150+15 (English) in 1927. The Contractor shall remove the existing structure as required and replace it with a a single span steel wide flange I-Beam bridge on open spill thru abutments. The road shall be kept open to one lane traffic at all times utilizing stage Construction.

No Salvage.

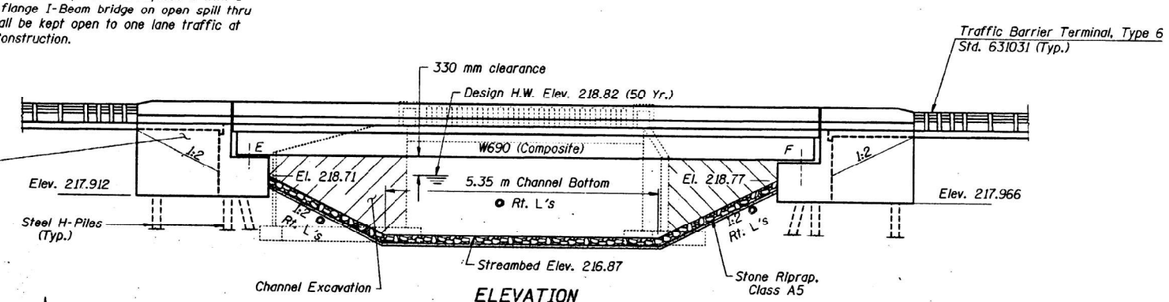

ELEVATION

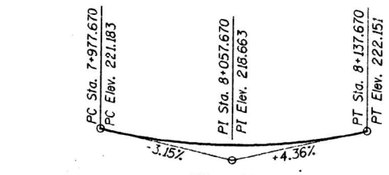

PROFILE GRADE

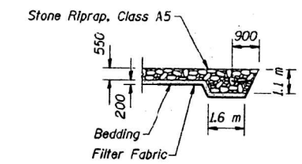

SECTION A-A

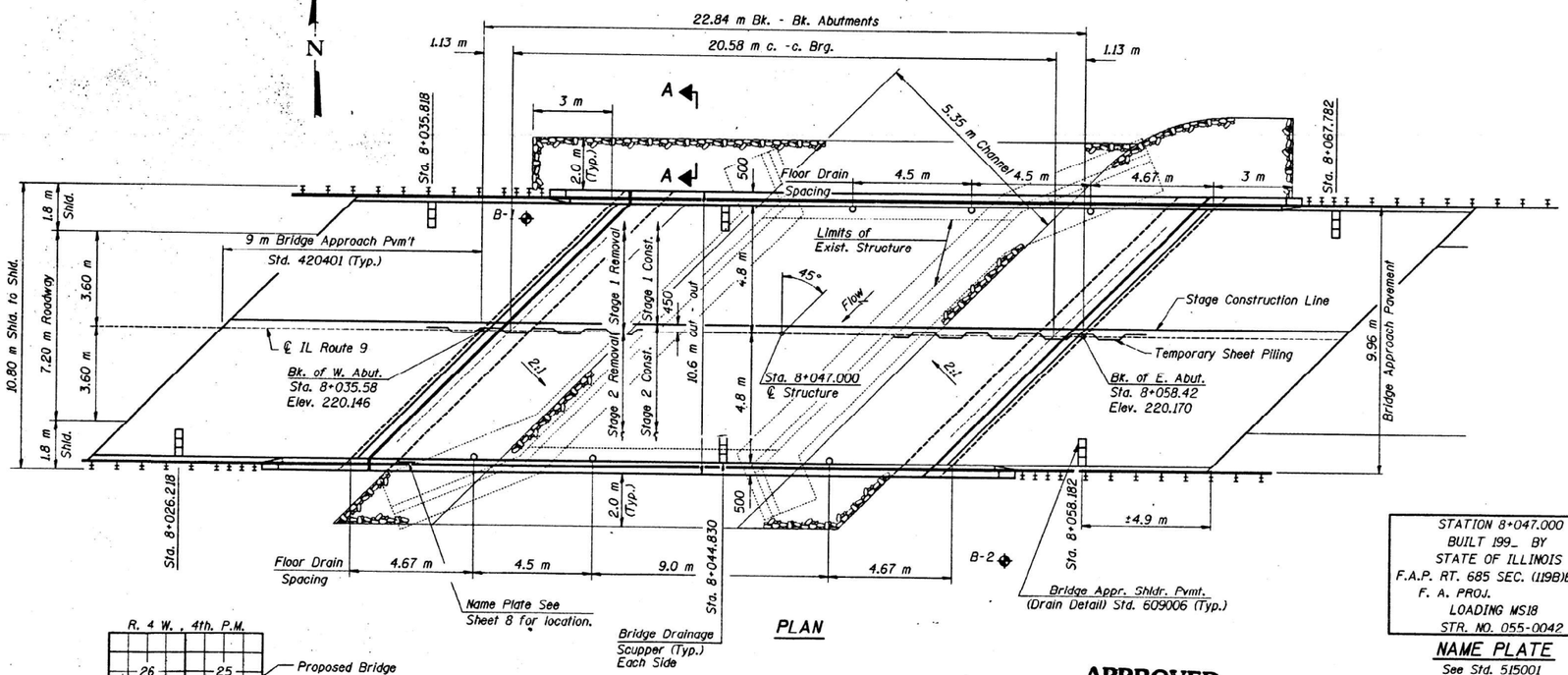

PLAN

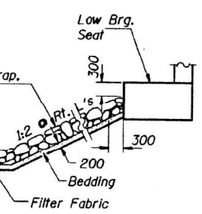

STONE RIPRAP ANCHOR DETAIL

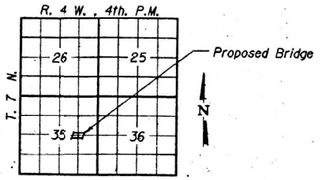

LOCATION SKETCH

WATERWAY INFORMATION

Drainage Area = 7.54 km² Low Grade Elev. 220.143 m @ Sta. 8+053.40

Flood	Freq. Yr.	Q cms	Opening Sq. m Exist.	Opening Sq. m Prop.	Nat. H.W.E. m	Head - m Exist.	Head - m Prop.	Headwater Elev. - m Exist.	Headwater Elev. - m Prop.
Design	50	35	10.3	20.3	218.82	1.16	0.18	219.98	219.00
Base	100	41	11.1	21.9	218.94	1.16	0.21	220.10	219.15
Overtopping	40	32	9.9		218.75	1.13		219.88	
Max. Calc.	500	55		24.9	219.18		0.37		219.55

APPROVED
FOR STRUCTURAL ADEQUACY ONLY

ENGINEER OF BRIDGES AND STRUCTURES

12/5/96
Illinois Structural No. 4745

JETN B. UZMAN 4745 LICENSED STRUCTURAL ENGINEER OF SPRINGFIELD ILLINOIS

Expires 11-30-98

STATION 8+047.000
BUILT 199_ BY
STATE OF ILLINOIS
F.A.P. RT. 685 SEC. (119B)BR-1
F. A. PROJ.
LOADING MS18
STR. NO. 055-0042

NAME PLATE
See Std. 515001

DESIGN SPECIFICATIONS

AASHTO 1992. 1993-1995 Interims

LOADING MS 18

Allow 1.2 kN/m² for future wearing surface.

DESIGN STRESSES

FIELD UNITS
f'_c = 24 MPa
f_y = 250 MPa (M270 Grade 250)
f_y = 345 MPa (M270 Grade 345)
f_y = 400 MPa (Reinf.)

SEISMIC DATA

SPC = A
A = 0.04
S = 1.0

All dimensions in millimeters (mm) except as noted.

Rice, Derry and Uzman
A Division of Hampton, Lenzini and Renwick, Inc.
Civil Engineers
Structural Engineers
Land Surveyors
801 S. Durkin Drive
Springfield, Illinois 62704
217-546-3400
Account Number 12-58-0001-i
DATE: 10-16-96
DESIGNED: S.W.M. CHECKED: T.B.U. DRAWN: D.B.

GENERAL PLAN AND ELEVATION
ILLINOIS ROUTE 9 OVER BAPTIST CREEK
FA ROUTE 685 SECTION (119B) BR-1
McDONOUGH COUNTY
STA. 8+047.000
STRUCTURE NO. 055-0042

MODEL: Default
FILE NAME: P:\2023\3098410 - Bridge Painting (FY 2023)\4 CADD - DWG\4.7 Trans\Sheets\D468J34\D468J34-jhl-structural detail 2.dgn

TWM ENGINEERING GEOSPATIAL SERVICES
TWM, INC. WWW.TWM-INC.COM
IL DESIGN FIRM LICENSE NO: 184-001220

USER NAME = dlee	DESIGNED - JCL	REVISED -	
	DRAWN - JCL	REVISED -	
PLOT SCALE = 10.0000 ' / in.	CHECKED - TBP	REVISED -	
PLOT DATE = 8/6/2024	DATE - JULY 2024	REVISED -	

STATE OF ILLINOIS
DEPARTMENT OF TRANSPORTATION

LOCATION 2 – STRUCTURE INFORMATION
SN 055–0042

SCALE: N/A | SHEET 1 OF 5 SHEETS | STA. TO STA.

F.A. RTE.	SECTION	COUNTY	TOTAL SHEETS	SHEET NO.
VAR	D4 BRIDGE PAINTING 2025	*	52	18
	* HENDERSON, MCDONOUGH, MERCER, WARREN	CONTRACT NO. 68J34		
	ILLINOIS	FED. AID PROJECT		

FOR INFORMATION ONLY
LOCATION 2 (IL 9 OVER BAPTIST CREEK)
SN 055–0042

ROUTE NO.	SECTION	COUNTY	TOTAL SHEETS	SHEET NO.
F.A.P. 685	(119B)BR-1	McDONOUGH	57	17
FED. ROAD DIST. NO. /	ILLINOIS	FED. AID PROJECT -		

Sheet 7 of 20

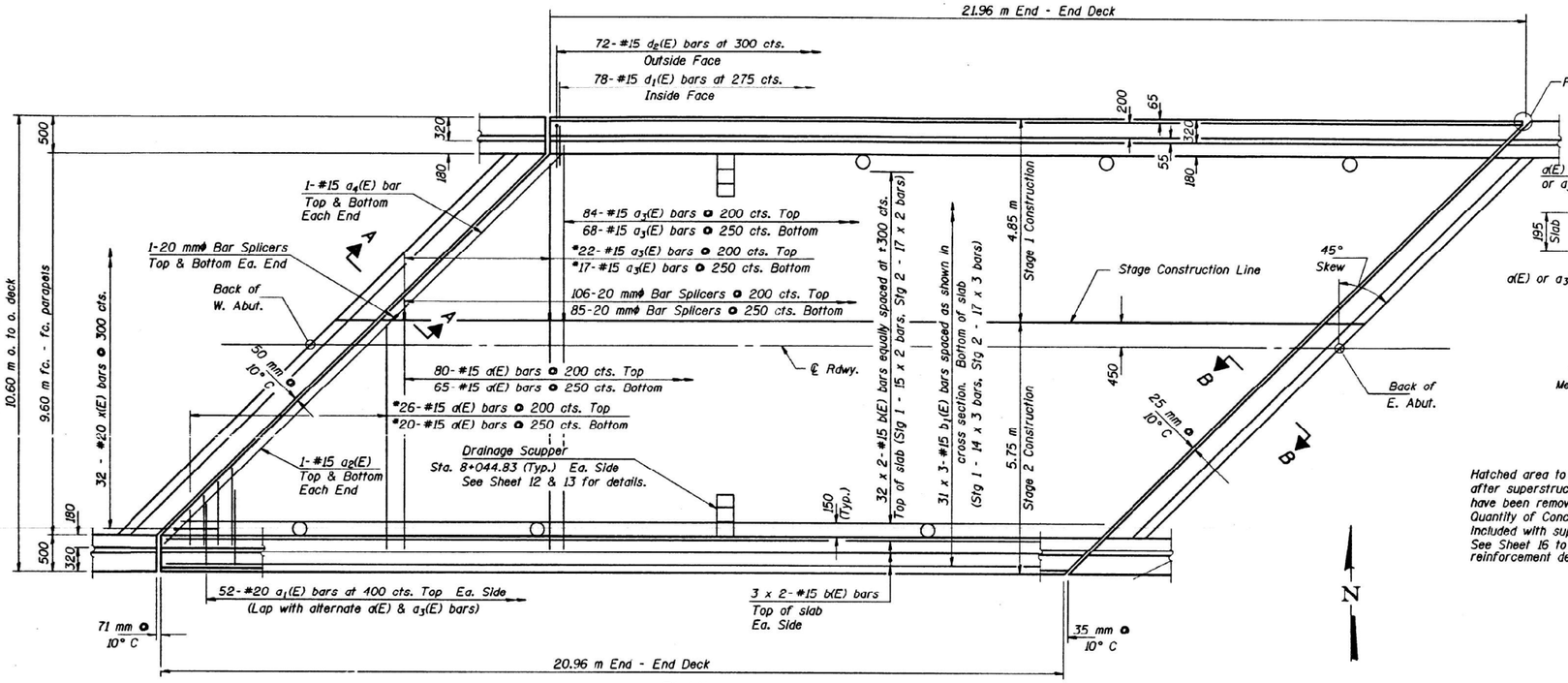

PLAN

* Order a(E) & a_3(E) bars full length. Cut to fit skew and use remainder of bars in opposite end.

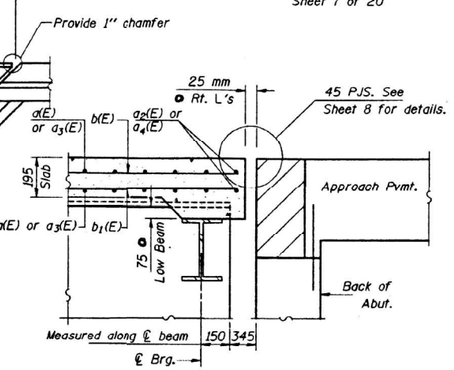

SECTION B-B

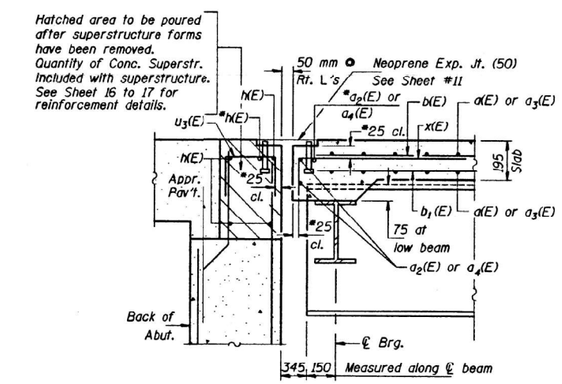

SECTION A-A

*Place a_2(E), a_4(E) and h(E) bars in back of anchor bolts as shown if required to maintain 25 mm cl. (+0-3 mm). Anchor bolts should be tied to a_2(E) or a_4(E), in slab and h(E) in backwall.

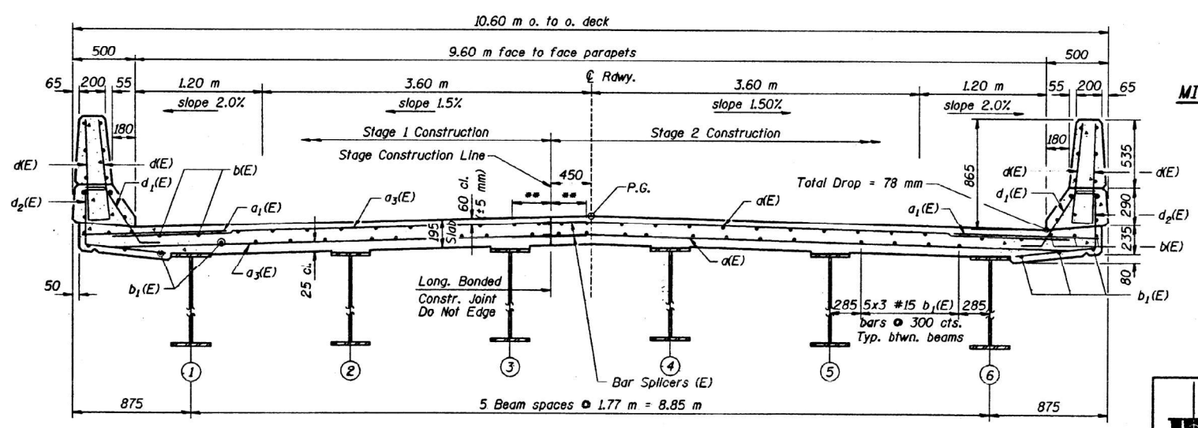

CROSS SECTION
(Looking East)

** Bars in the area shall be tied with twice the required number of ties.

MIN. BAR LAPS

#15 ___ 510
#25 ___ 850

Notes: See Sheet #8 for superstructure details and Bill of Material.
Reinforcement bars designated (E) shall be epoxy coated.
Bars indicated thus 20 x 3-#15 etc. indicates 20 lines of bars with 3 lengths per line.
See Sheet #8 for parapet reinforcement.
See Sheet #8 for scupper details.
See Sheet #1 for floor drain locations.

All dimensions in millimeters (mm) except as noted.

HLR
Rice, Berry and Uzman
A Division of Hampton, Lenzini and Renwick, Inc.
Civil Engineers
Structural Engineers
Land Surveyors
801 S. Durkin Drive
Springfield, Illinois 62704
217-546-3400
Account Number 12-58-0001-i
DATE: 10-16-96
DESIGNED: S.W.M. CHECKED: Z.B.U. DRAWN: D.B.

SUPERSTRUCTURE
ILLINOIS ROUTE 9 OVER BAPTIST CREEK
FA ROUTE 685 SECTION (119B) BR-1
McDONOUGH COUNTY
STA. 8+047.000
STRUCTURE NO. 055-0042

E:\p\125900011\0042\plans\super.dgn Dec. 3, 1996 18:44:52

MODEL: Default
FILE NAME: P:\2023\23098AID - Bridge Painting (FY 2023)\4 CADD - DWG\4.7 TranSheets\D468134\D468134-sht-structural detail 2.dgn

TWM ENGINEERING GEOSPATIAL SERVICES
TWM, INC.
WWW.TWM-INC.COM
IL DESIGN FIRM LICENSE NO: 184-001220

USER NAME = dlee	DESIGNED - JCL	REVISED -	
	DRAWN - JCL	REVISED -	
PLOT SCALE = 10.0000 ' / in.	CHECKED - TBP	REVISED -	
PLOT DATE = 8/6/2024	DATE - JULY 2024	REVISED -	

STATE OF ILLINOIS
DEPARTMENT OF TRANSPORTATION

LOCATION 2 – STRUCTURE INFORMATION
SN 055–0042

SCALE: N/A | SHEET 2 OF 5 SHEETS | STA. TO STA.

F.A. RTE.	SECTION	COUNTY	TOTAL SHEETS	SHEET NO.
VAR	D4 BRIDGE PAINTING 2025	*	52	19
* HENDERSON, MCDONOUGH, MERCER, WARREN		CONTRACT NO. 68J34		
		ILLINOIS	FED. AID PROJECT	

FOR INFORMATION ONLY
LOCATION 2 (IL 9 OVER BAPTIST CREEK)
SN 055–0042

ROUTE NO.	SECTION	COUNTY	TOTAL SHEETS	SHEET NO.
F.A.P. 685	(119B)BR-1	McDONOUGH	57	18
FED. ROAD DIST. NO. 7	ILLINOIS	FED. AID PROJECT		

Sheet 8 of 20

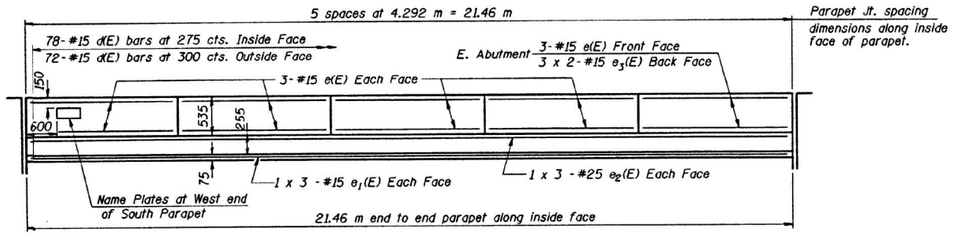

INSIDE ELEVATION OF PARAPET

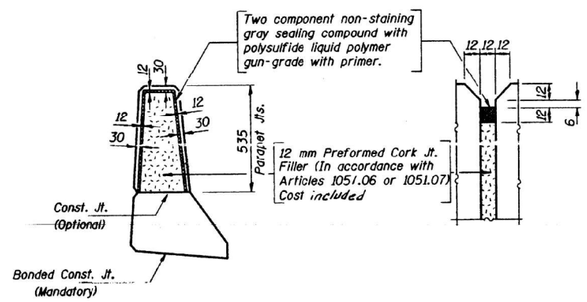

PARAPET JOINT DETAILS

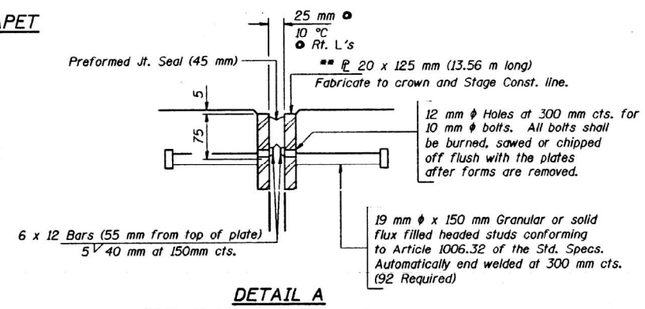

DETAIL A

** Furnish in segments of 6 m maximum length. Maximum space between installed segments shall be 5 mm. Seal space with Silicone Sealant suitable for Structural Steel.

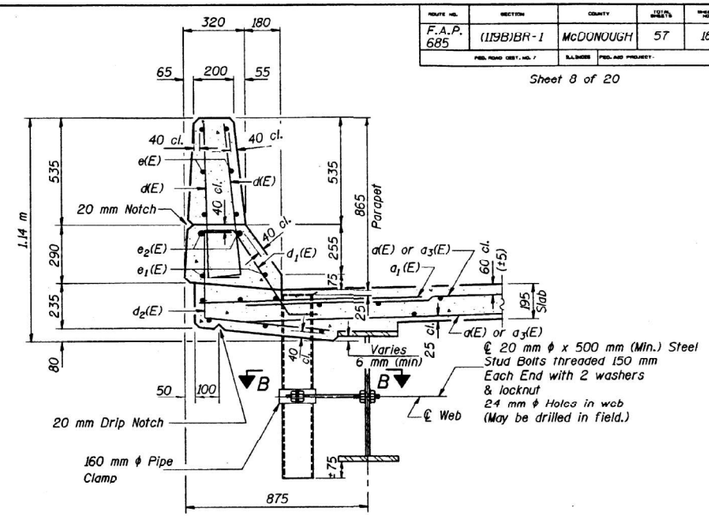

SECTION THRU PARAPET

SUPERSTRUCTURE BILL OF MATERIAL

Bar	No.	Size	Length (m)	Shape
d(E)	191	#15	5.43 m	
a_1(E)	104	#20	1.20 m	
a_2(E)	4	#15	7.40 m	
a_3(E)	191	#15	4.53 m	
a_4(E)	4	#15	6.41 m	
a_5(E)	16	#15	500	
b(E)	76	#15	10.94 m	
b_1(E)	93	#15	7.46 m	
d(E)	300	#15	910	
d_1(E)	156	#15	800	
d_2(E)	144	#15	1.18 m	
e(E)	54	#15	4.20 m	
e_1(E)	12	#15	8.17 m	
e_2(E)	12	#25	7.71 m	
e_3(E)	12	#15	2.67 m	
x(E)	32	#20	1.28 m	
Reinforcement Bars, Epoxy Coated			kg	7,690
Concrete Superstructure			m3	72.4
Bar Splicers			Each	195
Name Plates			Each	1

Reinforcement bars designated (E) shall be epoxy coated.
Bars indicated thus 5 x 3-#15 etc. indicates 5 line of bars with 3 lengths per line.

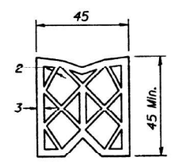

PREFORMED JOINT SEAL (45 mm)

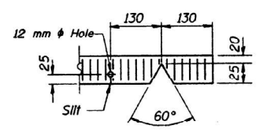

SEAL CUT-OUT

PREFORMED JOINT SEAL DETAILS

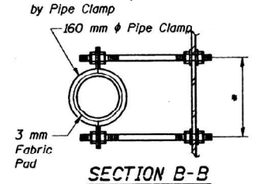

SECTION B-B

* Dimension as required by Pipe Clamp

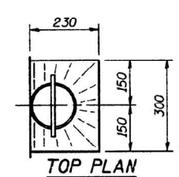

TOP PLAN

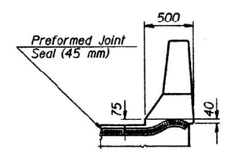

END TREATMENT

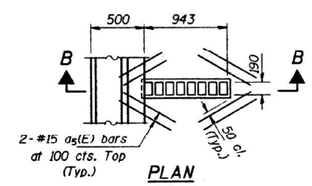

PLAN

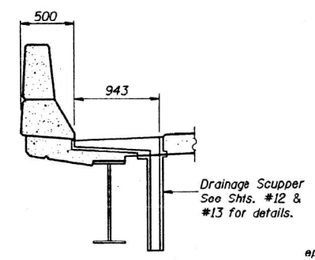

SECTION B-B

DRAINAGE SCUPPER DETAILS

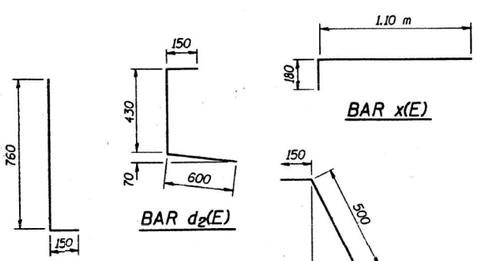

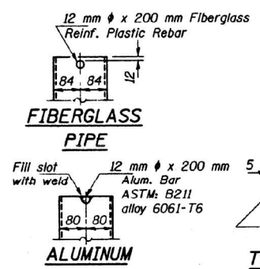

Notes:

The exterior surfaces of the floor drains shall be painted with the finish coat as specified in the special provisions for Cleaning and Painting Metal Structures. The exterior surfaces of the drain shall be cleaned and given a washcoat pretreatment in accordance with Steel Structures Painting Council's Spec. SSPC-SP1 & SSPC-Paint 27 prior to painting.

Fiberglass pipe shall conform to ASTM: D2996, with short-time rupture strength hoop tensile stress of 200 MPa minimum. The surface of the Fiberglass pipe shall be free of bond inhibiting agents.

All dimensions are in millimeters (mm) except as noted.

MIN. BAR LAPS

#15 ___ 640 mm
#25 ___ 1.32 m

All dimensions in millimeters (mm) except as noted.

HLR
Rice, Berry and Uzman
A Division of Hampton, Lenzini and Renwick, Inc.
Civil Engineers
Structural Engineers
Land Surveyors
Account Number 12-58-00011
DATE: 10-16-96
801 S. Durkin Drive
Springfield, Illinois 62704
217-546-3400
DESIGNED: S.W.M. CHECKED: Z.B.U. DRAWN: D.B.

SUPERSTRUCTURE DETAILS
ILLINOIS ROUTE 9 OVER BAPTIST CREEK
FA ROUTE 685 SECTION (119B) BR-1
McDONOUGH COUNTY
STA. 8+047.000
STRUCTURE NO. 055-0042

FOR INFORMATION ONLY
LOCATION 2 (IL 9 OVER BAPTIST CREEK)
SN 055–0042

ROUTE NO.	SECTION	COUNTY	TOTAL SHEETS	SHEET NO.
F.A.P. 685	(119B)BR-1	McDONOUGH	57	19
FED. ROAD DIST. NO. 7	ILLINOIS	FED. AID PROJECT-		

Sheet 9 of 20

INTERIOR GIRDER MOMENT TABLE

		0.5 Sp. 1
Is	(10^6 mm^4)	1980
Ic (n)	(10^6 mm^4)	5378
Ic (3n)	(10^6 mm^4)	3864
Ss	(10^3 mm^3)	5640
Sc (n)	(10^3 mm^3)	8436
Sc (3n)	(10^3 mm^3)	7547
Z	(10^3 mm^3)	6460
ℓ	(kN/m)	10.7
Mℓ	(kN·m)	567
sℓ	(kN/m)	4.2
Msℓ	(kN·m)	222
Mt	(kN·m)	674
M (Imp)	(kN·m)	175
S_3[Mt + M(Imp)]	(kN·m)	1415
Ma	(kN·m)	2865
Mu	(kN·m)	3300
fsℓ non-comp	(MPa)	100.5
fsℓ (comp)	(MPa)	29.4
fsS_3(t + Imp)	(MPa)	167.7
fs (Overload)	(MPa)	297.6
VR	(kN)	184

INTERIOR GIRDER REACTION TABLE

		Abut.
Rℓ	(kN)	154
Rt	(kN)	146
Imp.	(kN)	38
R (Total)	(kN)	338

Is and Ss are the moment of inertia and section modulus of the steel section used in computing fs (Total & Overload).

Ic(n) and Sc(n) are the moment of inertia and section modulus of the composite section used in computing stresses due to Live Load.

Ic(3n) and Sc(3n) are the moment of inertia and section modulus of the composite section used in computing stresses due to superimposed dead loads. (see AASHTO 10.38)

VR is the maximum Live Load + Impact shear range in span.

Z is the plastic section modulus used to determine the fully plastic moments in the non-composite areas.

Ma (Applied Moment)=1.3[Mℓ + Msℓ + S_3(Mt + M_{imp})].

The Plastic Moment capacity (Mu) is computed according to AASHTO 10.48.1 and 10.50.1.1.

fs (Overload) is the sum of the stresses due to Mℓ + Msℓ + S_3(Mt + M_{imp}).

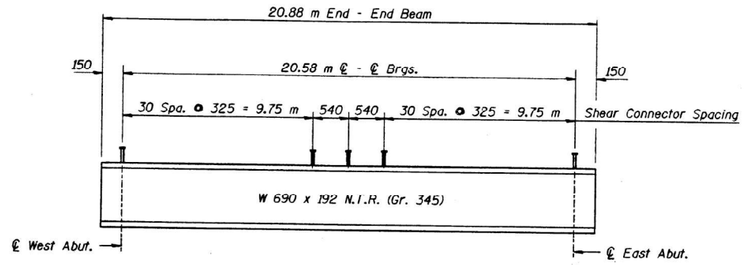

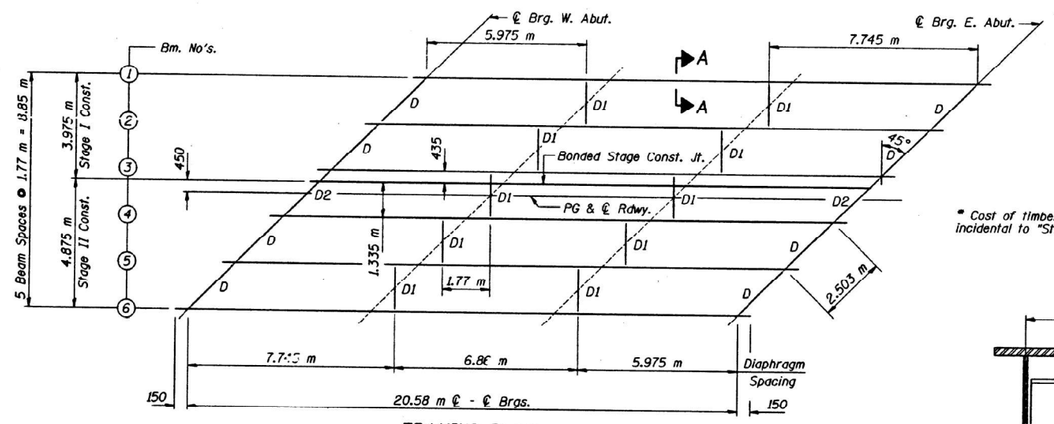

FRAMING PLAN

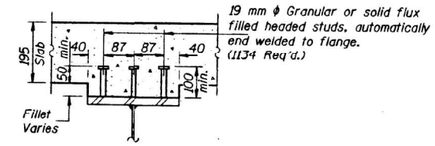

SECTION A-A

The Contractor shall order length for studs required after deck forms are in place and fillet heights have been determined.

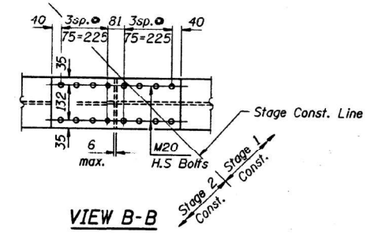

VIEW B-B

* Cost of timber block posts is incidental to "Structural Steel".

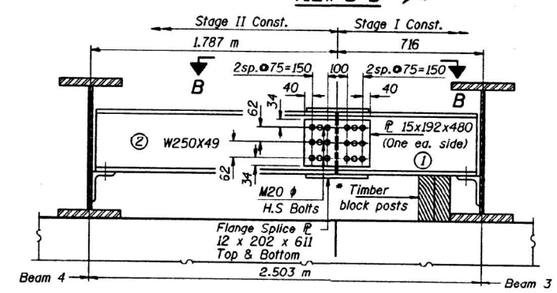

DIAPHRAGM D_2

2 Required
(Looking West)
For details of connections, see diaphragm D.

DIAPHRAGM D_2 CONSTRUCTION SEQUENCE

1.) Order Diaphragm D_2 in two sections with lengths of 716 mm and 1.787 m.
2.) Attach section ① of diaphragm to beam #3 and top flange splice ℄ during Stage I Construction.
3.) Place Timber block posts between section ① of diaphragm and abutment bearing seat.
4.) Attach section ② of diaphragm to both beam #4 and section ① of diaphragm during Stage II Construction with splice plates.
5.) Remove Timber block plates.

All dimensions in millimeters (mm) except as noted.

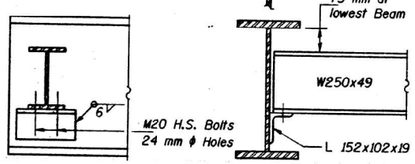

DIAPHRAGM D

8 Required

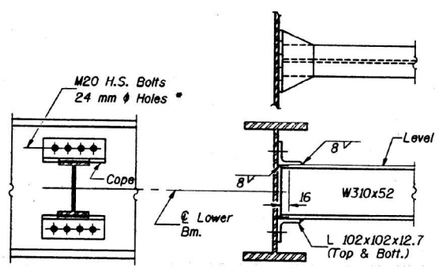

DIAPHRAGM D_1

10 Required

Note: Two hardened washers shall be required over all oversize holes for diaphragms.

* 40 mm x 22 mm slotted holes in beam 3. The bolts for the slotted holes shall only be fingered-tightened prior to the deck slab pouring and then be fully-tightened after the completion of the pouring. Use 8 mm thick washers @ these locations.

Notes:
N.T.R. - indicates Notch Toughness Requirements, Zone 2.

TOP OF BEAM ELEVATIONS

	Beam 1	Beam 2	Beam 3	Beam 4	Beam 5	Beam 6
℄ Brg. W. Abut.	219.814	219.848	219.880	219.887	219.868	219.847
℄ Brg. E. Abut.	219.878	219.895	219.910	219.899	219.864	219.826

For fabrication only.
Does not include dead load deflection.

Rice, Berry and Uzman
A Division of Hampton, Lenzini and Renwick, Inc.
Civil Engineers
Structural Engineers
Land Surveyors
801 S. Durkin Drive
Springfield, Illinois 62704
217-546-3400
Account Number 12-58-0001-1
DATE: 10-16-96
DESIGNED: S.W.M. CHECKED: Z.B.U. DRAWN: D.B.

STRUCTURAL STEEL
ILLINOIS ROUTE 9 OVER BAPTIST CREEK
FA ROUTE 685 SECTION (119B) BR-1
McDONOUGH COUNTY
STA. 8+047.000
STRUCTURE NO. 055-0042

FOR INFORMATION ONLY
LOCATION 2 (IL 9 OVER BAPTIST CREEK)
SN 055–0042

BEAM	t
1	—
2	—
3	12
4	19
5	—
6	—

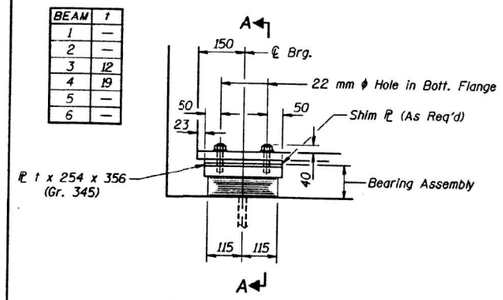

ELEVATION AT W. ABUT.

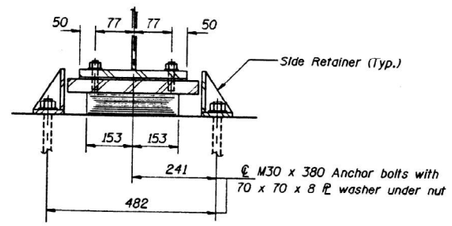

SECTION A-A

TYPE I ELASTOMERIC EXP. BRG.

BEAM	t_1
1	—
2	17
3	11
4	—
5	—
6	—

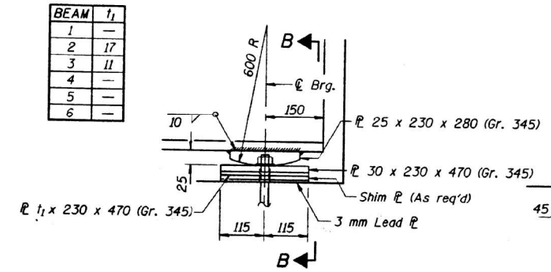

ELEVATION AT E. ABUT.

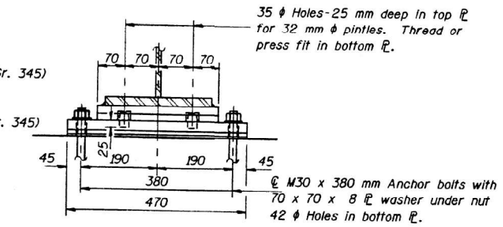

SECTION B-B

FIXED BEARING

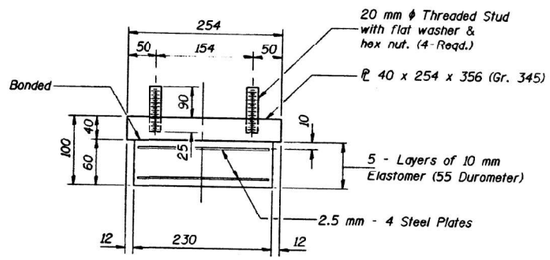

BEARING ASSEMBLY

Note: Shim plates shall not be placed under Bearing Assembly.

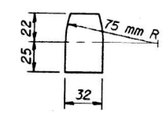

PINTLE

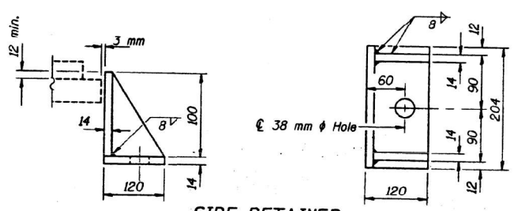

SIDE RETAINER

Equivalent rolled angle with stiffeners will be allowed in lieu of welded plates. Weight included with Structural Steel.

ROUTE NO.	SECTION	COUNTY	TOTAL SHEETS	SHEET NO.
F.A.P. 685	(119B)BR-1	McDONOUGH	57	20
FED. ROAD DIST. NO. 7	ILLINOIS	FED. AID PROJECT-		

Sheet 10 of 20

BILL OF MATERIAL

Item	Unit	Total
Elastomeric Bearing Assembly Type I	Each	6

All dimensions in millimeters (mm) except as noted.

Rice, Berry and Uzman
A Division of Hampton, Lenzini and Renwick, Inc.
Civil Engineers
Structural Engineers
Land Surveyors
801 S. Durkin Drive
Springfield, Illinois 62704
217-546-3400

Account Number 12-58-0001-i
DATE: 10-16-96
DESIGNED: S.W.M. CHECKED: Z.B.U. DRAWN: D.B.

BEARINGS
ILLINOIS ROUTE 9 OVER BAPTIST CREEK
FA ROUTE 685 SECTION (119B) BR-1
McDONOUGH COUNTY
STA. 8+047.000
STRUCTURE NO. 055-0042

d:\p\1258000\00420\plans\bearings. Dec. 3, 1996 18:46:14

MODEL: Default
FILE NAME: P:\2023\3098410 - Bridge Painting IFY 2023\14 CADD - DWG\4.7 Train\Sheets\D468134\D468134-sht-structural detail 2.dgn

TWM ENGINEERING GEOSPATIAL SERVICES
TWM, INC.
WWW.TWM-INC.COM
IL DESIGN FIRM LICENSE NO: 184-001220

USER NAME = dlee	DESIGNED - JCL	REVISED -	
	DRAWN - JCL	REVISED -	
PLOT SCALE = 10.0000 ' / in.	CHECKED - TBP	REVISED -	
PLOT DATE = 8/6/2024	DATE - JULY 2024	REVISED -	

STATE OF ILLINOIS
DEPARTMENT OF TRANSPORTATION

LOCATION 2 – STRUCTURE INFORMATION
SN 055–0042

SCALE: N/A | SHEET 5 OF 5 SHEETS | STA. TO STA.

F.A. RTE.	SECTION	COUNTY	TOTAL SHEETS	SHEET NO.
VAR	D4 BRIDGE PAINTING 2025	*	52	22
* HENDERSON, MCDONOUGH, MERCER, WARREN		CONTRACT NO. 68J34		
	ILLINOIS	FED. AID PROJECT		

FOR INFORMATION ONLY
LOCATION 3 & 4 (NB/SB US 67 OVER FARMERS FORK)
SN 055–0080 & SN 055–0081

Bench Mark: Chiseled "□" on top of northeast wingwall of S.N. 055-0003, Elev. 680.50. Chiseled "□" on top of southwest wingwall of S.N. 055-0027, Elev. 680.74.

Existing Structure: Structure Number 055-0003 was originally built in 1965 as S.B.I. Rte 3, Section 38BR over Farmers Fork Creek. In 1907 the structure was widened to accommodate a left turn lane when the two lane highway was upgraded to a four lane expressway under Sections 38-1, 37B-2, and 38B-2. In 2004, three deck beams were replaced on the structure under Section 38B-4. In 2008, two additional deck beams were replaced under Sections (37B)1 and (38B-2)1. The existing structure is a single span PPC deck beam bridge on closed abutments with pile-supported spread footings. 53'-0" out-to-out deck width, 52'-6" bk.-bk. abutment length. The structure is at a 45 degree right ahead skew.

Existing Structure: Structure Number 055-0027 was originally built in 1987 as F.A.P. Rte 10, Section 38-1, 37B-2, and 38B-2, over Farmers Fork Creek. In 2009 nine of the deck beams were replaced under Section (38B-2)1. The existing structure is a three simple span PPC deck beam bridge on pile bent abutments and piers. The out-to-out deck width is 40'-0" and the bk.-bk. abutment length is 94'-0". The structure is at a 45 degree right ahead skew.

The existing structures shall be removed and replaced.

Traffic to be maintained utilizing crossovers. Traffic will be maintained on existing S.N. 055-0003 while S.N. 055-0081 is constructed. Traffic will be maintained on S.N. 055-0081 while S.N. 055-0080 is constructed.

No Salvage.

DESIGN SCOUR ELEVATION TABLE

Design Scour Elevation (ft.)	S.N. 055-0080		S.N. 055-0081	
	N. Abut.	S. Abut.	N. Abut.	S. Abut.
	675.5	675.9	675.8	676.2

WATERWAY INFORMATION

Drainage Area = 4.12 Sq. Mi.

Exist. Low Grade Elev. 680.80 @ Sta. 153+16
Prop. Low Grade Elev. 683.66 @ Sta. 152+97

Flood	Freq. Yr.	Q C.F.S.	Opening Sq. Ft. Exist.	Opening Sq. Ft. Prop.	Nat. H.W.E.	Head - Ft. Exist.	Head - Ft. Prop.	Headwater El. Exist.	Headwater El. Prop.
	10	883	333	454	676.2	0.7	0.7	676.9	676.9
Design	50	1,373	369	504	676.9	1.3	1.0	678.2	677.9
Base	100	1,597	382	522	677.1	1.6	1.1	678.7	678.2
Overtop Exist.	400	1,997	402	-	677.5	3.7	-	681.2	-
Max. Calc.	500	2,130	-	560	677.6	-	1.4	-	679.0

INDEX OF SHEETS

1	General Plan & Elevation
2	General Data
3	Temporary Sheet Piling
4	Substructure Layout
5-7	Top of Slab Elevations
8	Top of North Approach Slab Elevations SN 055-0080
9	Top of South Approach Slab Elevations SN 055-0080
10	Top of North Approach Slab Elevations SN 055-0081
11	Top of South Approach Slab Elevations SN 055-0081
12	Superstructure SN 055-0080
13	Superstructure SN 055-0081
14	Superstructure Details
15	Diaphragm Details SN 055-0080
16	Diaphragm Details SN 055-0081
17	Drainage Scupper, DS-11
18-19	Bridge Approach Slab Details SN 055-0080
20-21	Bridge Approach Slab Details SN 055-0081
22	Framing Plan
23-24	Girder Details
25	North Abutment SN 055-0080
26	South Abutment SN 055-0080
27	North Abutment SN 055-0081
28	South Abutment SN 055-0081
29	Metal Shell Pile Details
30	Bar Splicer Assembly and Mechanical Splicer Details
31	Concrete Parapet Slipforming Option
32-35	Soil Boring Logs

DESIGN SPECIFICATIONS

2010 AASHTO LRFD Bridge Design Specifications 5th Edition

LOADING HL-93

Allow 50#/sq. ft. for future wearing surface.

DESIGN STRESSES

FIELD UNITS

f'c = 3,500 psi
fy = 60,000 psi (Reinforcement)
fy = 50,000 psi (M270 Grade 50W)

SEISMIC DATA

Seismic Performance Zone (SPZ) = 1
Design Spectral Acceleration at 1.0 sec. (S_{D1}) = 0.109g
Design Spectral Acceleration at 0.2 sec. (S_{DS}) = 0.164g
Soil Site Class = D

STATE OF ILLINOIS
ALAN D. LUKENS
081-005167
QUINCY, ILLINOIS
LICENSED STRUCTURAL ENGINEER

APPROVED
For Structural Adequacy Only
Engineer of Bridges & Structures

01-23-2012
Alan D. Lukens
Licensed Structural Engineer
State of Illinois No. 081-005167
License Expires 11/30/12
Date

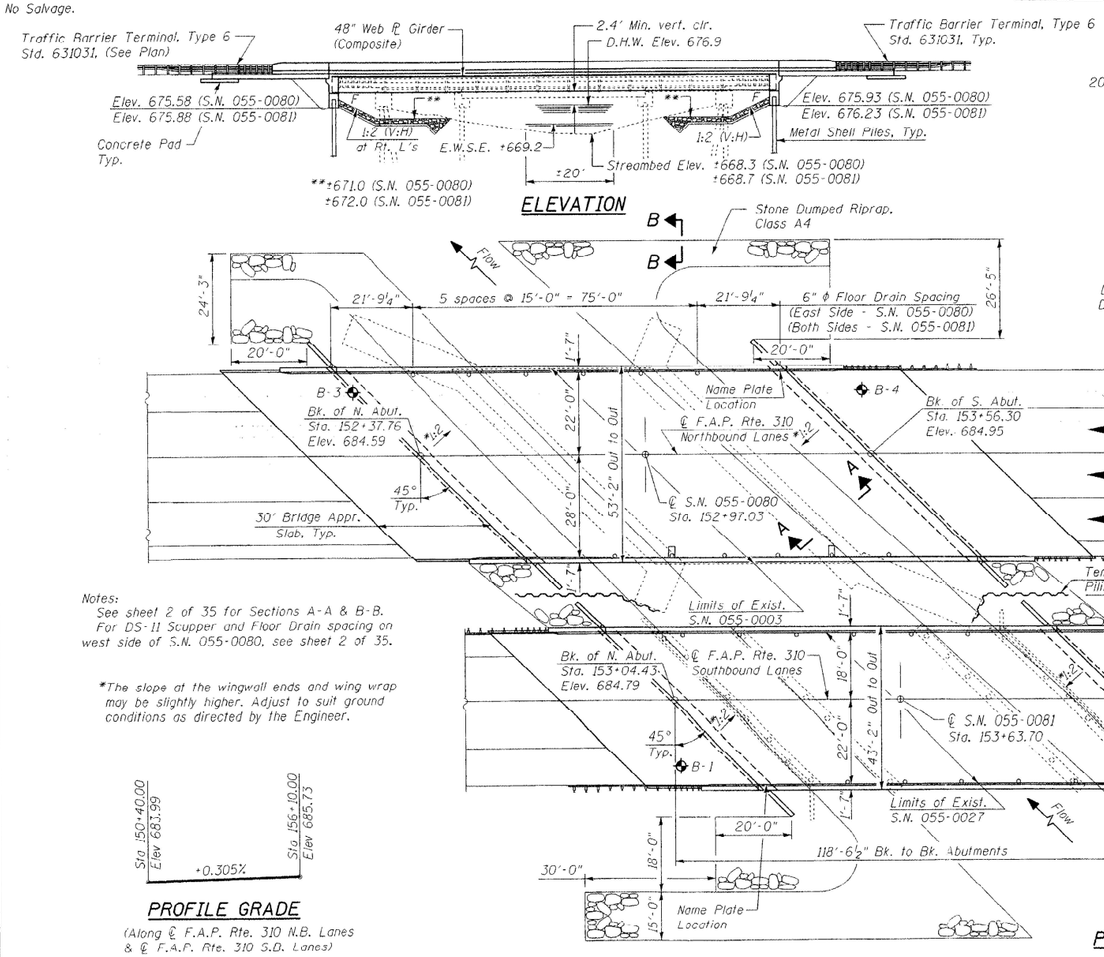

Notes:
See sheet 2 of 35 for Sections A-A & B-B.
For DS-11 Scupper and Floor Drain spacing on west side of S.N. 055-0080, see sheet 2 of 35.

*The slope at the wingwall ends and wing wrap may be slightly higher. Adjust to suit ground conditions as directed by the Engineer.

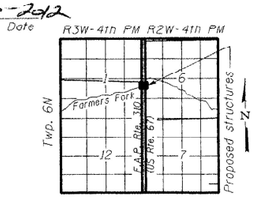

LOCATION SKETCH

GENERAL PLAN & ELEVATION
US 67 OVER FARMERS FORK CREEK
FAP ROUTE 310 SECTION (38B-2)BR
MCDONOUGH COUNTY
STATION 152+97.03 (SN 055-0080)
STATION 153+63.70 (SN 055-0081)
STRUCTURE NO. 055-0080 (N.B.)
STRUCTURE NO. 055-0081 (S.B)

FILE NAME = P:\07files\070286\Phase2\Bridge Plans\01_GPE_Plan&Elev.dgn	USER NAME = rjp	DESIGNED - KTH	REVISED -
	PLOT SCALE = 0:2.0624 ' / IN.	CHECKED - ADL	REVISED -
	PLOT DATE = 1/23/2012	DRAWN - BGJ	REVISED -
		CHECKED - RJP	REVISED -

STATE OF ILLINOIS
DEPARTMENT OF TRANSPORTATION

GENERAL PLAN & ELEVATION
S.N. 055–0080 (NB) & S.N. 055–0081 (SB)
SHEET NO. 1 OF 35 SHEETS

F.A.P. RTE.	SECTION	COUNTY	TOTAL SHEETS	SHEET NO.
310	(38B-2)BR	MCDONOUGH	130	58
		CONTRACT NO. 68691		
		ILLINOIS FED. AID PROJECT		

Klingner & Associates P.C.

MODEL: Default
FILE NAME: P:\0273\3098AID - Bridge Painting (FY 2023)\4 CADD - DWG\4.7 TranSheets\0468134\0468134-sht-structural detail 3.4.dgn

TWM, INC.
WWW.TWM-INC.COM
ENGINEERING & GEOSPATIAL SERVICES
IL DESIGN FIRM LICENSE NO: 184-001220

USER NAME = dlee	DESIGNED - JCL	REVISED -	
	DRAWN - JCL	REVISED -	
PLOT SCALE = 10.0000 ' / in.	CHECKED - TBP	REVISED -	
PLOT DATE = 8/6/2024	DATE - JULY 2024	REVISED -	

STATE OF ILLINOIS
DEPARTMENT OF TRANSPORTATION

LOCATION 3 & 4 – STRUCTURE INFORMATION
SN 055–0080 & SN 055–0081
SCALE: N/A | SHEET 1 OF 7 SHEETS | STA. | TO STA.

F.A. RTE.	SECTION	COUNTY	TOTAL SHEETS	SHEET NO.
VAR	D4 BRIDGE PAINTING 2025	*	52	23
* HENDERSON, MCDONOUGH, MERCER, WARREN		CONTRACT NO. 68J34		
		ILLINOIS FED. AID PROJECT		

FOR INFORMATION ONLY
LOCATION 3 & 4 (NB/SB US 67 OVER FARMERS FORK)
SN 055–0080 & SN 055–0081

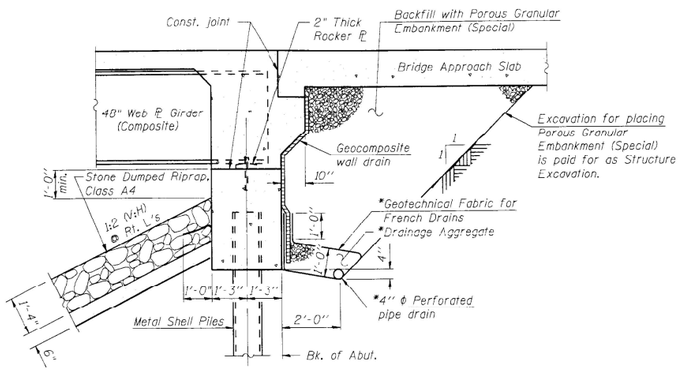

SECTION THRU INTEGRAL ABUTMENT

(Horiz. dim. ⌀ Rt. L's)

*Included in the cost of Pipe Underdrains for Structures.

Note:
All drainage system components shall extend to 2'-0" from the end of each wingwall except an outlet pipe shall extend until intersecting with the side slopes. The pipes shall drain into concrete headwalls. (See Article 601.05 of the Standard Specifications and Highway Standard 601101).

STATION 152+97.03
BUILT 201_ BY
STATE OF ILLINOIS
F.A.P. RT. 310 SEC. (38B-2)BR
LOADING HL-93
STRUCTURE NO. 055 0080

NAME PLATE - S.N. 055-0080
See Std. 515001

STATION 153+63.70
BUILT 201_ BY
STATE OF ILLINOIS
F.A.P. RT. 310 SEC. (38B-2)BR
LOADING HL-93
STRUCTURE NO. 055-0081

NAME PLATE - S.N. 055-0081
See Std. 515001

Current Ratings on File for Existing Structure

S.N. 055-0003:
Inventory - HS 21.0
Operating - HS 35.0
Live Load Restrictions: No
S.N. 055-0027:
Inventory - HS 12.0
Operating - HS 20.9
Live Load Restrictions: No

Inventory and Operating Ratings and Live Load Restrictions are provided for information only. Inventory and Operating Ratings are based on HS Loading and configuration. Live Load Restrictions are based on Illinois legal loads and configurations. The Ratings and Live Load Restrictions are not necessarily representative of capacities to support the Contractor's equipment.

GENERAL NOTES

Fasteners shall be AASHTO M164 Type 1, mechanically galvanized bolts in painted areas and M164 Type 3 in unpainted areas. Bolts $\frac{3}{4}$" ϕ, holes $\frac{13}{16}$" ϕ, unless otherwise noted.

Calculated weight of Structural Steel = 361,430 Pounds.

All structural steel shall be AASHTO M270 Grade 50W. All structural steel shall be cleaned as specified in the Special Provision for "Surface Preparation and Painting Requirements for Weathering Steel".

No field welding is permitted except as specified in the contract documents.

Reinforcement bars shall conform to the requirements of ASTM A 706 Gr 60. See Special Provisions.

Reinforcement bars designated (E) shall be epoxy coated.

If the Contractor elects to use cantilever forming brackets on the exterior beams or girders, the brackets shall be placed at the same locations as required for the hardwood blocks in Article 503.06(b) of the Standard Specifications. If additional cantilever forming brackets are required, hardwood blocking shall be wedged between the exterior and first interior beam at each of these additional bracket locations.

Structural steel shall only be painted for a distance equal to the depth of embedment into the concrete cap plus 3 inches. Painted areas shall be primed in the shop with a Department approved zinc rich primer. Field painting will not be required.

Layout of the slope protection system may be varied in the field to suit ground conditions as directed by the Engineer.

The embankment configuration shown shall be the minimum that must be placed and compacted prior to construction of the abutments.

The concrete for bridge decks finished according to Article 503.16(a) of the Standard Specifications shall be placed and compacted parallel to the skew in uniform increments along centerline of bridge. The machine used for finishing shall be set parallel to the skew for striking off and screeding the concrete.

The Contractor is advised that the existing PPC Deck beams are in a deteriorated condition with reduced load carrying capacity. It is the Contractor's responsibility to account for the condition of the beams when developing construction procedures for removal of the superstructure.

If the Contractor's procedures for existing deck beam removal involves placement of heavy equipment on the existing deck beams, a detailed procedure shall be submitted to the Engineer for approval. The procedure shall include calculations, sealed by an Illinois Licensed Structural Engineer, verifying the structural adequacy of the beams for the proposed loads. Cost included with Removal of Existing Structures.

Removal of existing bridge railing and wearing surface shall be included with Removal of Existing Structures.

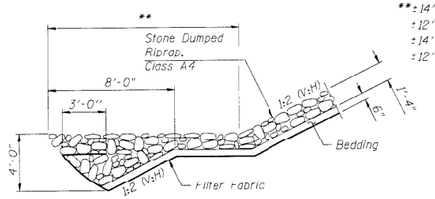

**±14' N. Abut. S.N. 055-0080
±12' S. Abut. S.N. 055-0080
±14' N. Abut. S.N. 055-0081
±12' S. Abut. S.N. 055-0081

SECTION A-A

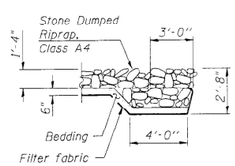

SECTION B-B

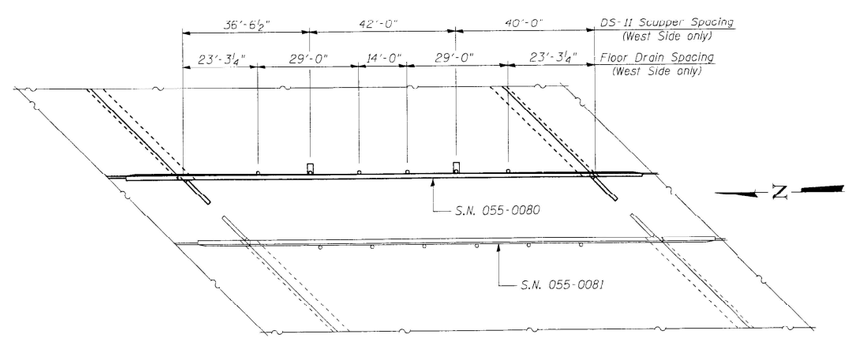

DS-11 SCUPPER SPACING S.N. 055-0080

TOTAL BILL OF MATERIAL

ITEM	UNIT	SUPER	SUB	TOTAL
Porous Granular Embankment, Special	Cu. Yd.		507	507
Stone Dumped Riprap, Class A4	Ton		1,613	1,613
Filter Fabric	Sq. Yd.		1,811	1,811
Removal of Existing Structures	Each			2
Structure Excavation	Cu. Yd.		178	178
Floor Drains	Each	22		22
Concrete Structures	Cu. Yd.		194.3	194.3
Concrete Superstructure	Cu. Yd.	781.8		781.8
Bridge Deck Grooving	Sq. Yd.	1,706		1,706
Protective Coat	Sq. Yd.	2,052		2,052
Furnishing and Erecting Structural Steel	L. Sum	1		1
Stud Shear Connectors	Each	5,499		5,499
Reinforcement Bars, Epoxy Coated	Pound	165,200	39,400	204,600
Bar Splicers	Each	204		204
Furnishing Metal Shell Piles, 14"x0.312"	Foot		2,785	2,785
Driving Piles	Foot		2,785	2,785
Test Pile Metal Shells	Each		4	4
Temporary Sheet Piling	Sq. Ft.		924	924
Name Plates	Each	2		2
Anchor Bolts, 1"	Each		52	52
Geocomposite Wall Drain	Sq. Yd.		254	254
Pipe Underdrains for Structures 4"	Foot		440	440
Drainage Scuppers, DS-11	Each	2		2
Asbestos Bearing Pad Removal	Each	9		9

1

FILE NAME = G:\07files\070286\Phase2\Bridge Plans\02_GenDeta.dgn	USER NAME = r_p	DESIGNED - KTH	REVISED - 1 1/5/12 ADL	STATE OF ILLINOIS DEPARTMENT OF TRANSPORTATION	GENERAL DATA S.N. 055–0080 (NB) & S.N. 055–0081 (SB)	F.A.P. RTE. 310	SECTION (38B-2)BR	COUNTY MCDONOUGH	TOTAL SHEETS 130	SHEET NO. 59
	PLOT SCALE = 60.0000 ' / IN.	CHECKED - ADL	REVISED -					CONTRACT NO. 68691		
	PLOT DATE = 7/6/2012	DRAWN - BGJ	REVISED -		SHEET NO. 2 OF 35 SHEETS			ILLINOIS FED. AID PROJECT		
		CHECKED - RJP	REVISED -					Klingner & Associates P.C.		

MODEL: Default
FILE NAME: P:\2023\23098410 - Bridge Painting (FY 2025)\4 CADD - DWG\4.7 Trans\Sheets\D4683H34\D4683H34-sht-structural detail 3.4.dgn

TWM ENGINEERING GEOSPATIAL SERVICES	TWM, INC. WWW.TWM-INC.COM IL DESIGN FIRM LICENSE NO: 184-001220	USER NAME = dlee	DESIGNED - JCL	REVISED -	STATE OF ILLINOIS DEPARTMENT OF TRANSPORTATION	LOCATION 3 & 4 – STRUCTURE INFORMATION SN 055–0080 & SN 055–0081	F.A. RTE. VAR	SECTION D4 BRIDGE PAINTING 2025	COUNTY *	TOTAL SHEETS 52	SHEET NO. 24
			DRAWN - JCL	REVISED -			* HENDERSON, MCDONOUGH, MERCER, WARREN		CONTRACT NO. 68J34		
		PLOT SCALE = 10.0000 ' / in.	CHECKED - TBP	REVISED -					ILLINOIS FED. AID PROJECT		
		PLOT DATE = 8/6/2024	DATE - JULY 2024	REVISED -		SCALE: N/A SHEET 2 OF 7 SHEETS STA. TO STA.					

FOR INFORMATION ONLY
LOCATION 3 & 4 (NB/SB US 67 OVER FARMERS FORK)
SN 055–0080 & SN 055–0081

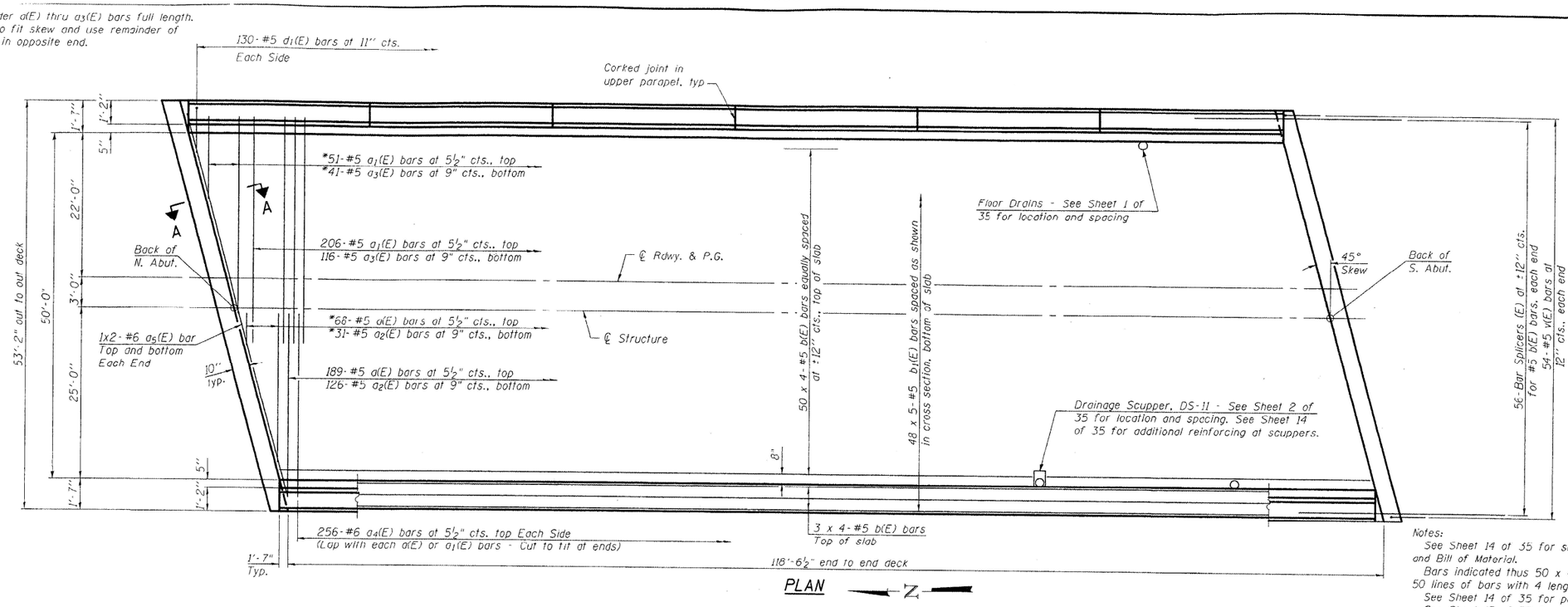

Notes:
See Sheet 14 of 35 for superstructure details and Bill of Material.
Bars indicated thus 50 x 4-#5 etc. indicates 50 lines of bars with 4 lengths per line.
See Sheet 14 of 35 for parapet reinforcement.
See Sheet 15 of 35 for Section A-A.

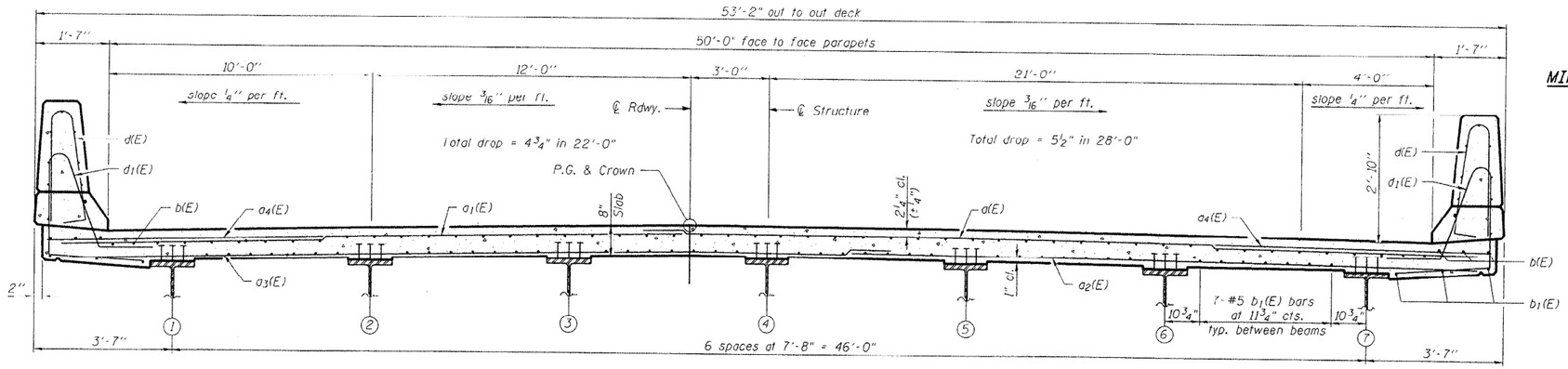

MINIMUM BAR LAP
#5 bar = 3'-3"
#6 bar = 3'-10"

CROSS SECTION
(Looking South)

FILE NAME = P:\07files\070286\Phase2\Bridge Plans\12.SuperStructurePlan.0080.dgn	USER NAME = sab	DESIGNED - KTH	REVISED -	STATE OF ILLINOIS DEPARTMENT OF TRANSPORTATION	SUPERSTRUCTURE S.N. 055–0080 (NB)	F.A.P. RTE.	SECTION	COUNTY	TOTAL SHEETS	SHEET NO.
		CHECKED - ADL	REVISED -			310	(38B-2)BR	MCDONOUGH	130	69
	PLOT SCALE = 0:2.0000 ':/ IN.	DRAWN - BGJ	REVISED -					CONTRACT NO. 68691		
	PLOT DATE = 12/7/2011	CHECKED - RJP	REVISED -		SHEET NO. 12 OF 35 SHEETS			ILLINOIS FED. AID PROJECT		

Klingner & Associates P.C.

TWM ENGINEERING & GEOSPATIAL SERVICES — TWM, INC. WWW.TWM-INC.COM IL DESIGN FIRM LICENSE NO: 184-001220	USER NAME = dlee	DESIGNED - JCL	REVISED -	STATE OF ILLINOIS DEPARTMENT OF TRANSPORTATION	LOCATION 3 & 4 – STRUCTURE INFORMATION SN 055–0080 & SN 055–0081	F.A. RTE.	SECTION	COUNTY	TOTAL SHEETS	SHEET NO.
		DRAWN - JCL	REVISED -			VAR	D4 BRIDGE PAINTING 2025	*	52	25
	PLOT SCALE = 10.0000 ' / in.	CHECKED - TBP	REVISED -			* HENDERSON, MCDONOUGH, MERCER, WARREN		CONTRACT NO. 68J34		
	PLOT DATE = 8/6/2024	DATE - JULY 2024	REVISED -		SCALE: N/A SHEET 3 OF 7 SHEETS STA. TO STA.			ILLINOIS FED. AID PROJECT		

MODEL: Default
FILE NAME: P:\2023\3938AID - Bridge Painting (FY 2023)\4 CADD - DWG\4.7 TranSheets\D468J34\D468J34-sht-structural detail 3.4.dgn

FOR INFORMATION ONLY
LOCATION 3 & 4 (NB/SB US 67 OVER FARMERS FORK)
SN 055–0080 & SN 055–0081

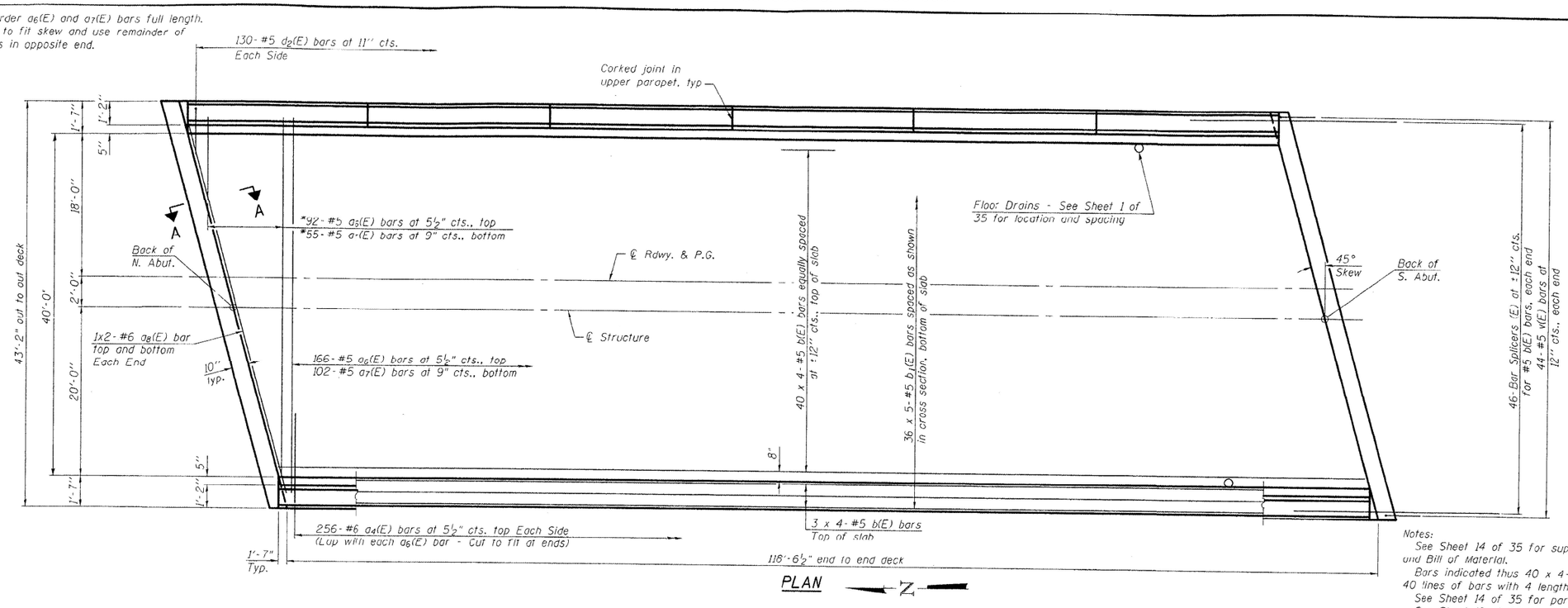

PLAN

Notes:
See Sheet 14 of 35 for superstructure details and Bill of Material.
Bars indicated thus 40 x 4-#5 etc. indicates 40 lines of bars with 4 lengths per line.
See Sheet 14 of 35 for parapet reinforcement.
See Sheet 16 of 35 for Section A-A.

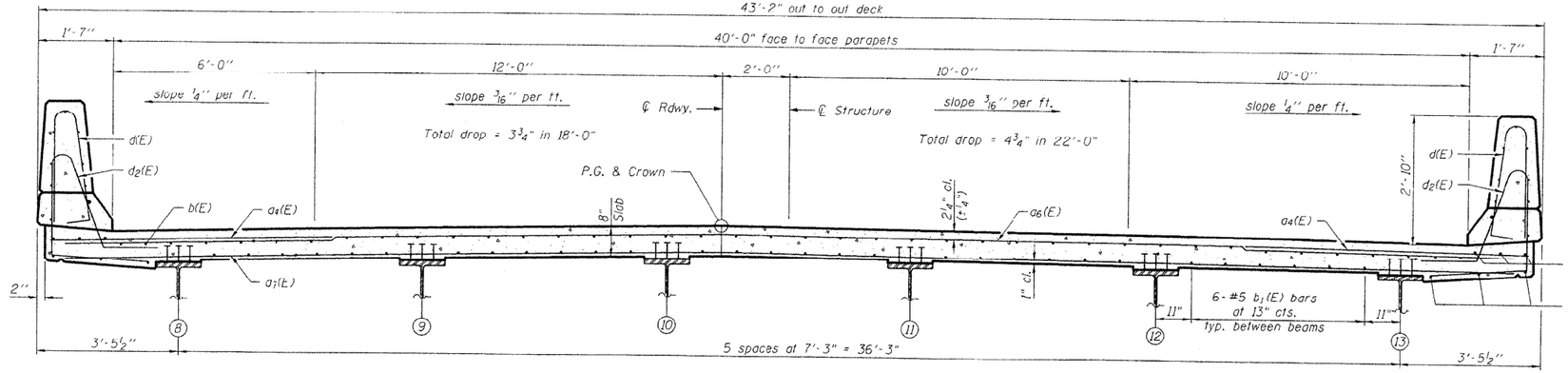

CROSS SECTION
(Looking South)

MINIMUM BAR LAP
#5 bar = 3'-3"
#6 bar = 3'-10"

FILE NAME = P:\07files\070286\Phase2\Bridge Plans\13.SuperStructurePlan.0081.dgn	USER NAME = seb	DESIGNED - KTH	REVISED -	STATE OF ILLINOIS DEPARTMENT OF TRANSPORTATION	SUPERSTRUCTURE S.N. 055–0081 (SB)	F.A.P. RTE.	SECTION	COUNTY	TOTAL SHEETS	SHEET NO.
	PLOT SCALE = 0:2.0000 ':' / IN.	CHECKED - ADL	REVISED -			310	(38B-2)BR	MCDONOUGH	130	70
	PLOT DATE = 12/7/2011	DRAWN - BGJ	REVISED -					CONTRACT NO. 68691		
		CHECKED - RJP	REVISED -		SHEET NO. 13 OF 35 SHEETS			ILLINOIS FED. AID PROJECT		

Klingner & Associates P.C.

TWM ENGINEERING & GEOSPATIAL SERVICES	TWM, INC. WWW.TWM-INC.COM IL DESIGN FIRM LICENSE NO: 184-001220	USER NAME = dlee	DESIGNED - JCL	REVISED -	STATE OF ILLINOIS DEPARTMENT OF TRANSPORTATION	LOCATION 3 & 4 – STRUCTURE INFORMATION SN 055–0080 & SN 055–0081	F.A. RTE.	SECTION	COUNTY	TOTAL SHEETS	SHEET NO.
			DRAWN - JCL	REVISED -			VAR	D4 BRIDGE PAINTING 2025	*	52	26
		PLOT SCALE = 10.0000 ' / in.	CHECKED - TBP	REVISED -			* HENDERSON, MCDONOUGH, MERCER, WARREN		CONTRACT NO. 68J34		
		PLOT DATE = 8/6/2024	DATE - JULY 2024	REVISED -		SCALE: N/A SHEET 4 OF 7 SHEETS STA. TO STA.			ILLINOIS FED. AID PROJECT		

MODEL: Default
FILE NAME: P:\0293\2303841D - Bridge Painting (FY 2023)\4 CADD - DWG\4.7 Trans\Sheets\0468341D468134-sht-structural detail 3-4.dgn

FOR INFORMATION ONLY

LOCATION 3 & 4 (NB/SB US 67 OVER FARMERS FORK)

SN 055–0080 & SN 055–0081

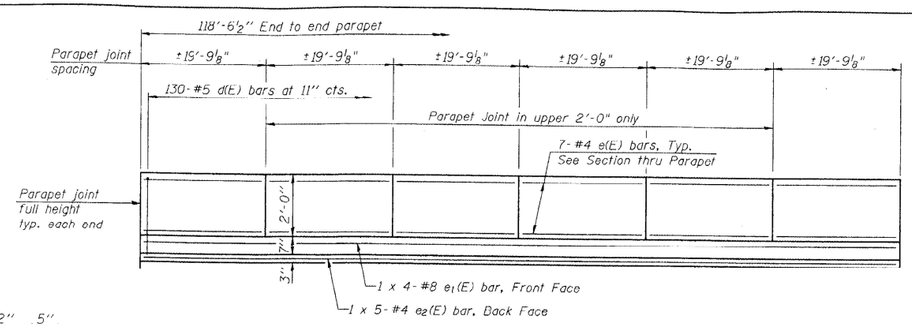

INSIDE ELEVATION OF PARAPET

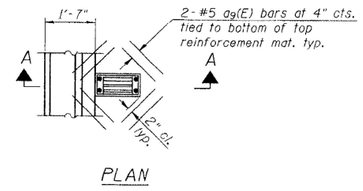

PLAN

Note:
Cut longitudinal reinforcement to clear drainage scuppers.

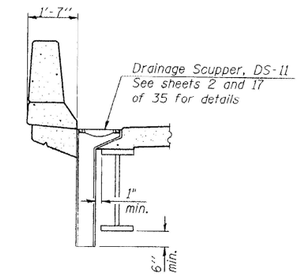

SECTION A-A

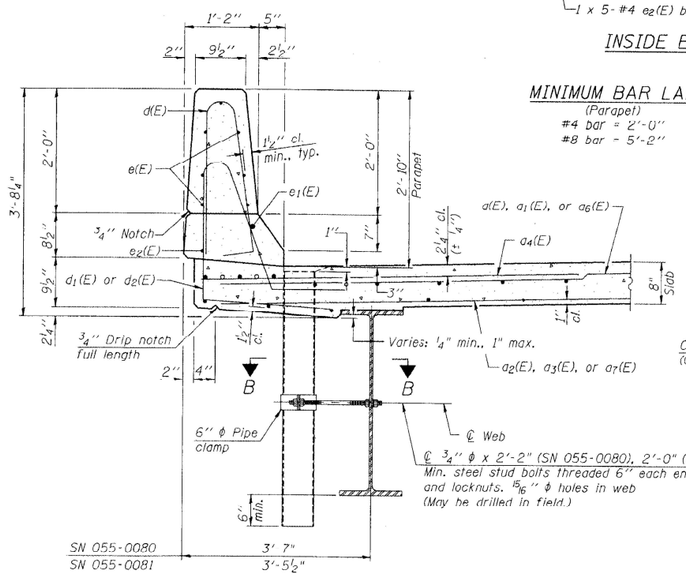

SECTION THRU PARAPET

MINIMUM BAR LAP
(Parapet)
#4 bar = 2'-0"
#8 bar = 5'-2"

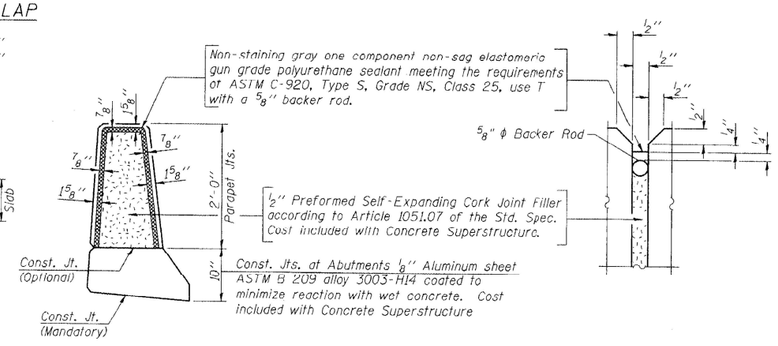

PARAPET JOINT DETAILS

Notes:
The Floor Drains need not be painted.
Drains shall be located clear of all diaphragms.
Fiberglass pipe shall conform to ASTM D 2996, with short-time rupture strength hoop tensile stress of 30,000 p.s.i. minimum.
Galvanize clamping device according to AASHTO M232. Cost of clamping device and inserts is included with Floor Drains.

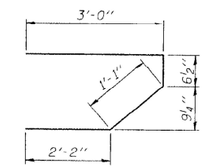

BAR s(E)

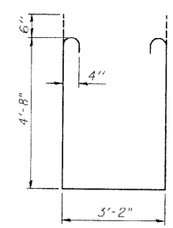

BAR s1(E)

SUPERSTRUCTURE BILL OF MATERIAL - 2 BRIDGES

Bar	No.	Size	Length	Shape
d(E)	257	#5	31'-9"	
d1(E)	257	#5	24'-1"	
d2(E)	157	#5	23'-10"	
d3(E)	157	#5	31'-6"	
d4(E)	1,024	#6	6'-6"	
d5(E)	8	#6	39'-2"	
d6(E)	258	#5	42'-7"	
d7(E)	157	#5	42'-1"	
d8(E)	8	#6	32'-1"	
d9(E)	16	#5	1'-6"	
b(E)	408	#5	32'-1"	
b1(E)	420	#5	26'-4"	
d(E)	520	#5	5'-7"	
d1(E)	260	#5	8'-3"	
d2(E)	260	#5	8'-1"	
e(E)	168	#4	19'-6"	
e1(E)	16	#8	33'-6"	
e2(E)	20	#4	25'-4"	
m(E)	20	#6	39'-2"	
m1(E)	28	#6	13'-7"	
m2(E)	12	#6	8'-7"	
m3(E)	4	#6	3'-9"	
m4(E)	20	#6	32'-1"	
m5(E)	24	#6	12'-11"	
m6(E)	10	#6	8'-0"	
m7(E)	4	#6	3'-7"	
s(E)	200	#5	6'-10"	
s1(E)	178	#4	13'-6"	
v(E)	196	#5	3'-9"	
Reinforcement Bars, Epoxy Coated			Pound	97,160
Concrete Superstructure			Cu. Yds.	486.1
Floor Drains			Each	22
Bar Splicers			Each	204

Bars indicated thus 1 x 4-#8 etc. indicates 1 line of bars with 4 lengths per line.

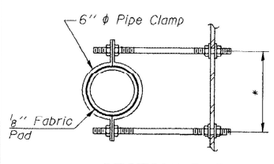

SECTION B-B
*Dimension as required by Pipe Clamp

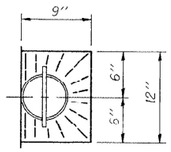

TOP PLAN

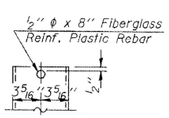

FIBERGLASS PIPE

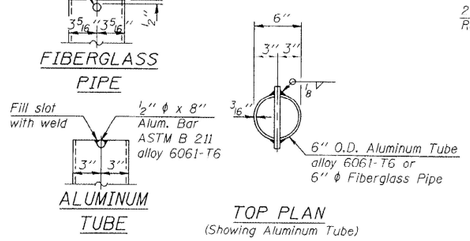

ALUMINUM TUBE

TOP PLAN
(Showing Aluminum Tube)

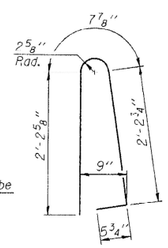

BAR d(E)

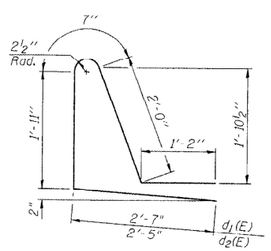

BAR d1(E) & d2(E)

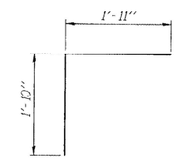

BAR v(E)

S-I-D 7-1-10

FILE NAME = P:\07files\070206\Phase2\Bridge Plans\14.SuperStructure_Details.dgn	USER NAME = seb	DESIGNED - KTH	REVISED - 12/13/2011
	PLOT SCALE = 0:2.0000 ' / IN.	CHECKED - ADL	REVISED -
	PLOT DATE = 12/13/2011	DRAWN - BGJ	REVISED -
		CHECKED - RJP	REVISED -

STATE OF ILLINOIS
DEPARTMENT OF TRANSPORTATION

SUPERSTRUCTURE DETAILS
S.N. 055–0080 (NB) & S.N. 055–0081 (SB)

SHEET NO. 14 OF 35 SHEETS

F.A.P. RTE.	SECTION	COUNTY	TOTAL SHEETS	SHEET NO.
310	(3BR-2)BR	MCDONOUGH	130	71

CONTRACT NO. 68691
ILLINOIS FED. AID PROJECT

Klingner & Associates P.C.

MODEL: Default
FILE NAME: P:\0232\3068AID - Bridge Painting (FY 2025)\4. CADD - DWG\4.7 Tron\Sheets\0468134\0468134-sht-structural detail 3-4.dgn

TWM ENGINEERING & GEOSPATIAL SERVICES
TWM, INC.
WWW.TWM-INC.COM
IL DESIGN FIRM LICENSE NO: 184-001220

USER NAME = dlee	DESIGNED - JCL	REVISED -	
	DRAWN - JCL	REVISED -	
PLOT SCALE = 10.0000 ' / in.	CHECKED - TBP	REVISED -	
PLOT DATE = 8/6/2024	DATE - JULY 2024	REVISED -	

STATE OF ILLINOIS
DEPARTMENT OF TRANSPORTATION

LOCATION 3 & 4 – STRUCTURE INFORMATION
SN 055–0080 & SN 055–0081

SCALE: N/A | SHEET 5 OF 7 SHEETS | STA. | TO STA.

F.A. RTE.	SECTION	COUNTY	TOTAL SHEETS	SHEET NO.
VAR	D4 BRIDGE PAINTING 2025	*	52	27
	* HENDERSON, MCDONOUGH, MERCER, WARREN	CONTRACT NO. 68J34		
		ILLINOIS FED. AID PROJECT		

FOR INFORMATION ONLY
LOCATION 3 & 4 (NB/SB US 67 OVER FARMERS FORK)
SN 055–0080 & SN 055–0081

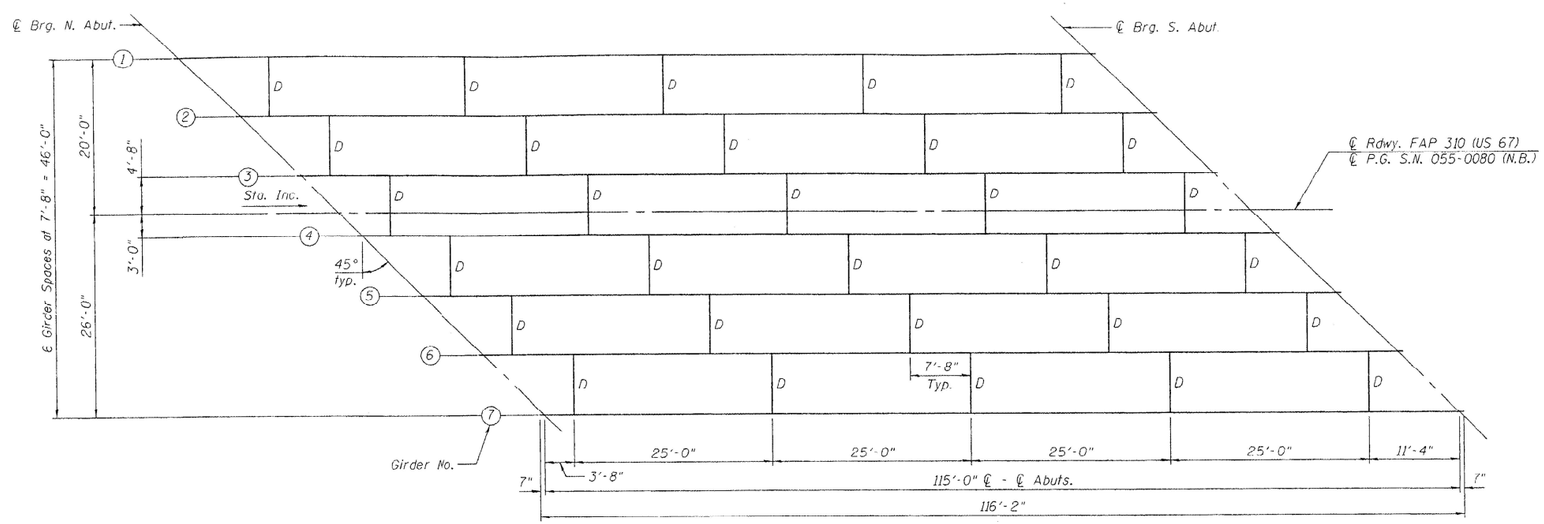

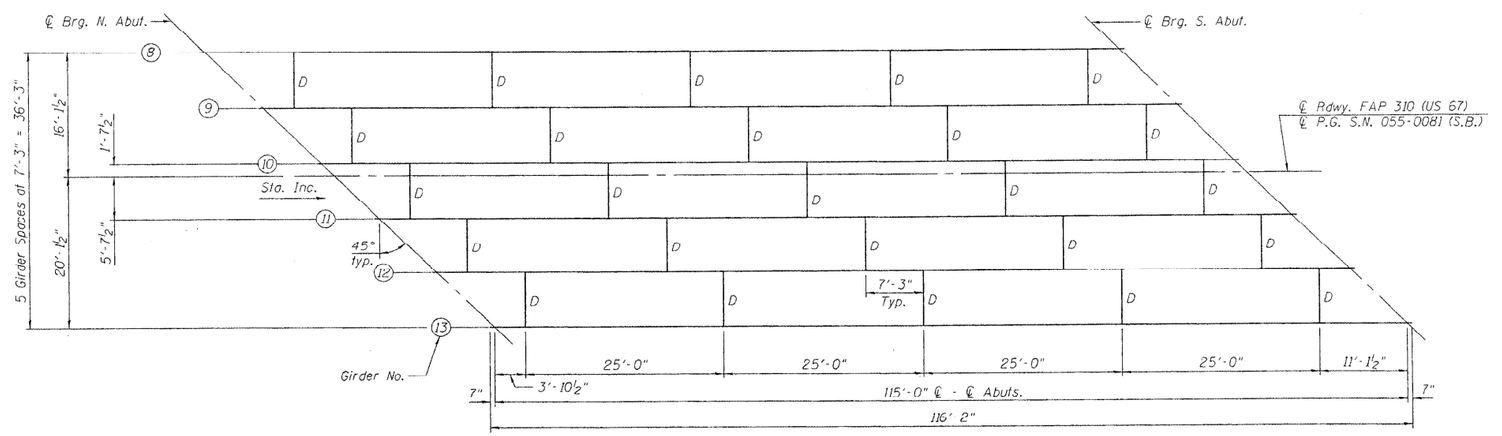

PLAN

Note:
All diaphragms shall be installed as steel is erected and secured with erection pins and bolts except as otherwise noted.

FILE NAME = P:\07files\070206\Phase2\Bridge Plans\22.Framing.Plan.dgn	USER NAME = seb	DESIGNED - KTH	REVISED -	STATE OF ILLINOIS DEPARTMENT OF TRANSPORTATION	FRAMING PLAN S.N. 055–0080 (NB) & S.N. 055–0081 (SB)	F.A.P. RTE.	SECTION	COUNTY	TOTAL SHEETS / SHEET NO.
		CHECKED - ADL	REVISED -			310	(38B-2)BR	MCDONOUGH	130 / 79
	PLOT SCALE = 0:2.0000 ' / IN.	DRAWN - BGJ	REVISED -					CONTRACT NO. 68691	
	PLOT DATE = 12/7/2011	CHECKED - RJP	REVISED -		SHEET NO. 22 OF 35 SHEETS			ILLINOIS FED. AID PROJECT	

Klingner & Associates P.C.

TWM ENGINEERING GEOSPATIAL SERVICES	TWM, INC. WWW.TWM-INC.COM IL DESIGN FIRM LICENSE NO: 184-001220	USER NAME = dlee	DESIGNED - JCL	REVISED -	STATE OF ILLINOIS DEPARTMENT OF TRANSPORTATION	LOCATION 3 & 4 – STRUCTURE INFORMATION SN 055–0080 & SN 055–0081	F.A. RTE.	SECTION	COUNTY	TOTAL SHEETS / SHEET NO.
			DRAWN - JCL	REVISED -			VAR	D4 BRIDGE PAINTING 2025	*	52 / 28
		PLOT SCALE = 10.0000 ' / in.	CHECKED - TBP	REVISED -			* HENDERSON, MCDONOUGH, MERCER, WARREN		CONTRACT NO. 68J34	
		PLOT DATE = 8/6/2024	DATE - JULY 2024	REVISED -		SCALE: N/A SHEET 6 OF 7 SHEETS STA. TO STA.		ILLINOIS FED. AID PROJECT		

MODEL: Default
FILE NAME: P:\0923\3098AID - Bridge Painting (FY 2025)\4 CADD - DWG\4.7 TranSheets\D468J34\D468J34-sht-structural detail 3.4.dgn

FOR INFORMATION ONLY
LOCATION 3 & 4 (NB/SB US 67 OVER FARMERS FORK)
SN 055–0080 & SN 055–0081

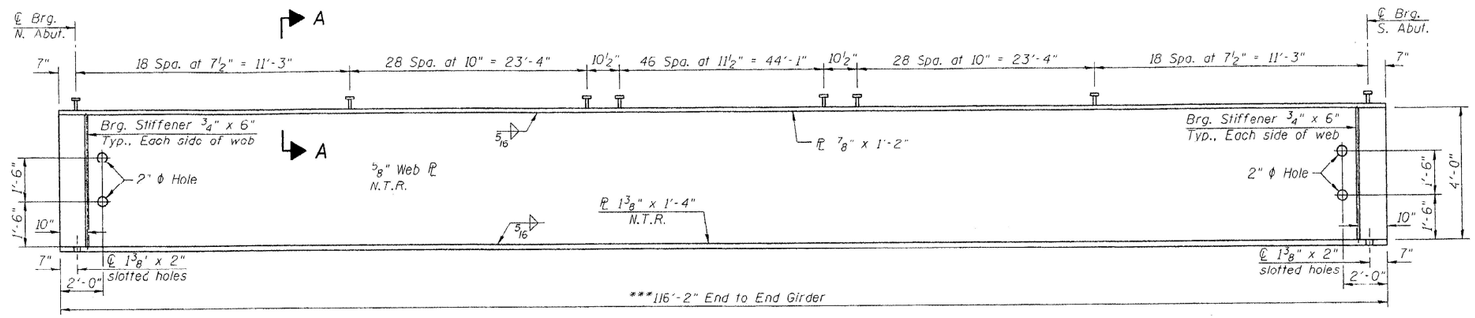

GIRDER ELEVATION

"NTR" denotes plates to which notch toughness requirements are applicable.

SHIM ℙ TABLE	
Size	Location
9" x 1'-4" x ⅝"	Girder 3 - N. Abut.
9" x 1'-4" x 1¼"	Girder 4 - N. Abut.
9" x 1'-4" x ⅝"	Girder 3 - S. Abut.
9" x 1'-4" x 1¼"	Girder 4 - S. Abut.
9" x 1'-4" x ½"	Girder 10 - N. Abut.
9" x 1'-4" x ½"	Girder 10 - S. Abut.

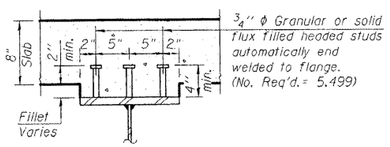

SECTION A-A

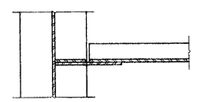

SECTION B-B

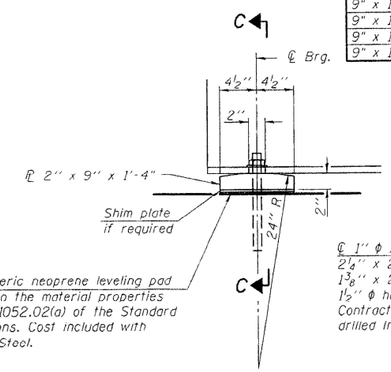

ELEVATION AT ABUTMENT

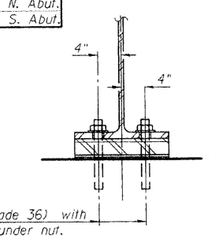

℄ 1" ϕ x 12" anchor bolts (Grade 36) with 2¼" x 2¼" x 5/16" ℙ washer under nut.
1⅜" x 2" slotted hole in flange.
1½" ϕ holes in bearing plate.
Contractor has the option of cast-in-place or drilled installation.

SECTION C-C

FIXED BEARING

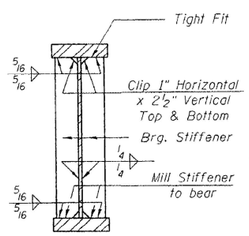

SECTION AT ABUTMENT

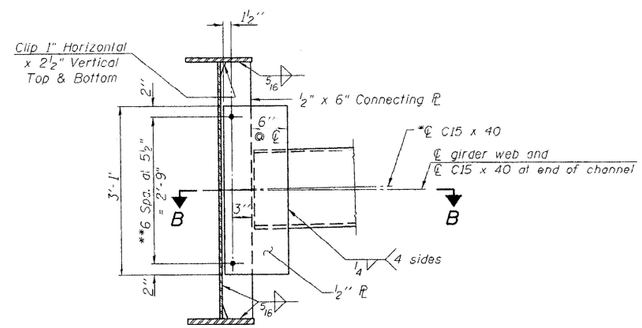

INTERIOR DIAPHRAGM, D

(55 Required)

Notes:
Two hardened washers required for each set of oversized holes.
*Alternate C15x50 channels are permitted to facilitate material acquisition. Calculated weight of structural steel is based on the lighter section. The alternate, if utilized, shall be provided at no additional cost to the Department.
**¾" ϕ HS bolts, 15/16" ϕ holes

Notes:
Load carrying components designated "NTR" shall conform to the Supplemental Requirements for Notch Toughness, Zone 2.
***The Contractor shall submit plans showing bracing details for transporting, erection, and deck forming for the section to Engineer for approval.
Anchor bolts shall be ASTM F1554 all-thread (or an Engineer-approved alternate material) of the grade(s) and diameter(s) specified. ASTM A307 Grade C anchor bolts may be used in lieu of ASTM F1554 Grade 36 (Fy=36ksi). The corresponding specified grade of AASHTO M314 anchor bolts may be used in lieu of ASTM F1554.
Drilled and set anchor bolts shall be installed according to Article 521.06 of the Standard Specifications.

FILE NAME = P:\07files\070286\Phase2\Bridge Plans\23_GIRDER DETAILS.dgn	USER NAME = seb	DESIGNED - KTH	REVISED -	STATE OF ILLINOIS DEPARTMENT OF TRANSPORTATION
		CHECKED - ADL	REVISED -	
	PLOT SCALE = 0:2.0000 ' / IN.	DRAWN - BGJ	REVISED -	
	PLOT DATE = 12/7/2011	CHECKED - RJP	REVISED -	

GIRDER DETAILS
S.N. 055–0080 (NB) & S.N. 055–0081 (SB)
SHEET NO. 23 OF 35 SHEETS

F.A.P. RTE.	SECTION	COUNTY	TOTAL SHEETS	SHEET NO.
310	(3BB-2)BR	MCDONOUGH	130	80
		CONTRACT NO. 68691		
		ILLINOIS FED. AID PROJECT		

Klingner & Associates P.C.

MODEL: Default
FILE NAME: P:\2023\3098AD - Bridge Painting (FY 2025)\4 CADD - DWG\4.7 TranSheets\D468134\D468134-sht-structural detail 3_4.dgn

TWM ENGINEERING & GEOSPATIAL SERVICES — TWM, INC. WWW.TWM-INC.COM IL DESIGN FIRM LICENSE NO: 184-001220	USER NAME = dlee	DESIGNED - JCL	REVISED -	STATE OF ILLINOIS DEPARTMENT OF TRANSPORTATION
		DRAWN - JCL	REVISED -	
	PLOT SCALE = 10.0000 ' / in.	CHECKED - TBP	REVISED -	
	PLOT DATE = 8/6/2024	DATE - JULY 2024	REVISED -	

LOCATION 3 & 4 – STRUCTURE INFORMATION
SN 055–0080 & SN 055–0081
SCALE: N/A | SHEET 7 OF 7 SHEETS | STA. | TO STA.

F.A. RTE.	SECTION	COUNTY	TOTAL SHEETS	SHEET NO.
VAR	D4 BRIDGE PAINTING 2025	*	52	29
	* HENDERSON, MCDONOUGH, MERCER, WARREN	CONTRACT NO. 68J34		
		ILLINOIS FED. AID PROJECT		

FOR INFORMATION ONLY
LOCATION 5 (IL 17 OVER EDWARDS RIVER)
SN 066–0021

Existing Structure (SN 066-0006):
The plans dated 1927 show that the original truss structure was erected with 7 cast-in-place approach spans on S.B.I. Route 83 in Sections 123 B & C. The plans dated 1971 show the superstructure was replaced with 9 spans of PPC deck beams on a widened substructure and one additional pier. The plans from 1994 show the removal of the asphalt overlay and installation of a 5½ inch concrete overlay with epoxy coated reinforcement.

Traffic Control:
Staged Construction will be utilized to maintain one lane of traffic during construction.

No Salvage

Bench Mark: RM 6
Chiseled square on top of the northeast corner of the concrete gage structure.
Elev. 563.386

Bench Mark: RM 8
Lag bolt in telephone pole 30 ft. upstream and 100 ft. landward of gage.
Elev. 555.378

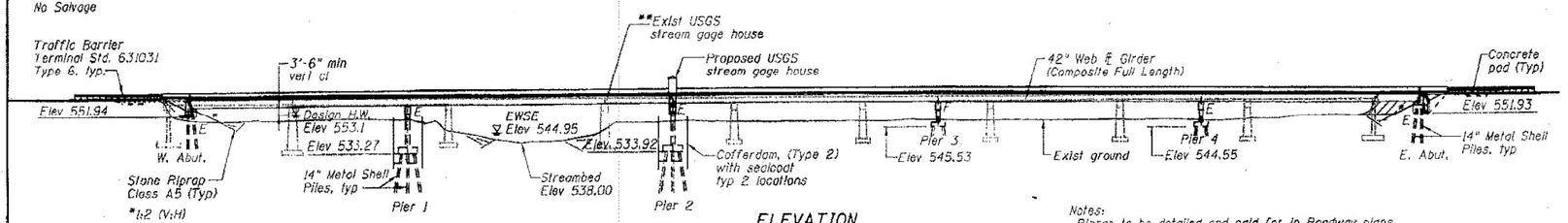

ELEVATION

Notes:
Riprap to be detailed and paid for in Roadway plans.

See Sheet 2 of 46 for Sections A-A and B-B.

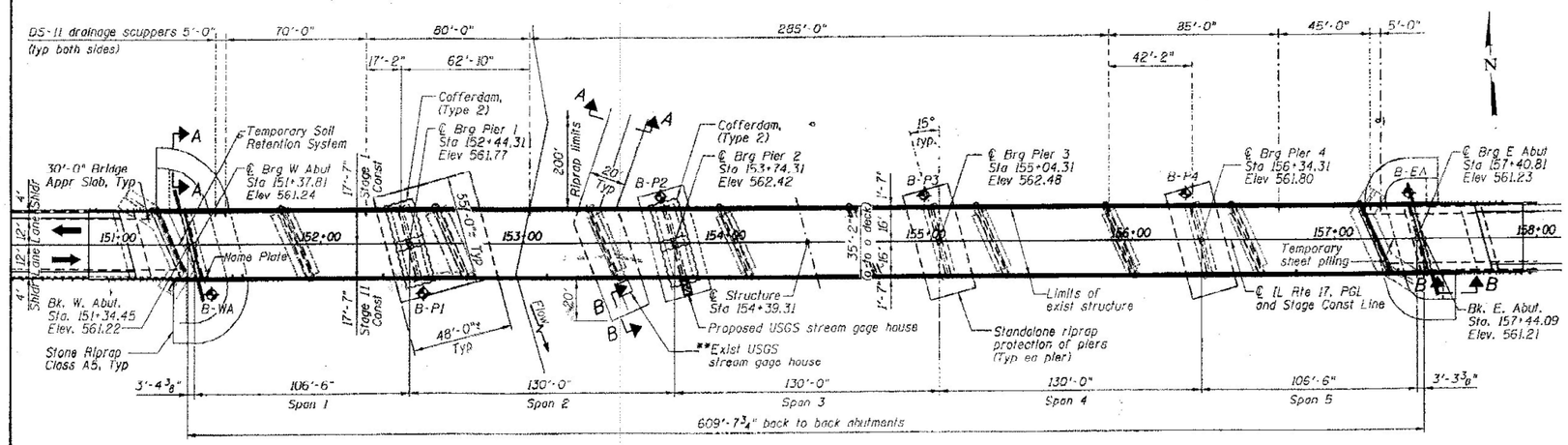

PLAN

**Existing USGS stream gage house and instrumentation shall be removed and discarded.

WATERWAY INFORMATION

Drainage Area = 445 sq mi Low Grade Elev. 558.00 @ Sta. 167+92

Flood	Freq. Yr.	Q C.F.S.	Opening Sq. Ft. Exist.	Opening Sq. Ft. Prop.	Net. H.W.E.	Head - Ft. Exist.	Head - Ft. Prop.	Headwater El. Exist.	Headwater El. Prop.
	10	8,230	1,895	2,017	552.2	2.1	1.5	554.3	553.7
Design	50	11,700	2,405	2,534	553.1	2.8	1.9	555.9	555.0
Base	100	13,200	2,576	2,706	553.4	3.0	2.1	556.4	555.5
Max. Calc.	500	16,700	2,975	3,112	554.1	3.6	2.4	557.7	556.5

10 Year Velocity through Existing Structure = 4.3 ft/s
10 Year Velocity through Proposed Structure = 4.1 ft/s

DESIGN SCOUR ELEVATION TABLE

Event/Limit State	Design Scour Elev (ft.) W. Abut	Pier 1	Pier 2	Pier 3	Pier 4	E. Abut	Item 113
Q100	551.9	505.0	505.0	541.2	540.5	551.9	5
Q500	551.9	500.0	500.0	539.2	538.5	551.9	
Design	551.9	505.0	505.0	541.2	540.5	551.9	
Check	551.9	500.0	500.0	539.2	538.5	551.9	

LOADING HL-93

Allow 50#/sq. ft. for future wearing surface.

DESIGN SPECIFICATIONS

2014 AASHTO LRFD Bridge Design Specifications
7th Edition with 2015 and 2016 Interims

DESIGN STRESSES

FIELD UNITS

f'c = 3,500 psi
f'c = 4,000 psi (Superstructure)
fy = 60,000 psi (Reinforcement)
fy = 50,000 psi (M270 Grade 50W)

SEISMIC DATA

Seismic Performance Zone (SPZ) = 1
Design Spectral Acceleration at 1.0 sec. (S_{D1}) = 0.089g
Design Spectral Acceleration at 0.2 sec. (S_{DS}) = 0.125g
Soil Site Class = D

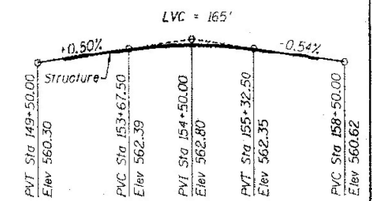

PROFILE GRADE
(Along ℄ Rdwy.)

STATION 154+39.31
BUILT 20 BY
STATE OF ILLINOIS
F.A.P. ROUTE 639
SEC. (123B)BR-1
LOADING HL-93
STRUCTURE NO. 066-0021

NAME PLATE
See Std. 515001

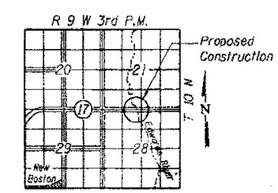

LOCATION SKETCH

APPROVED
For Structural Adequacy Only
Engineer of Bridges & Structures

Jeremy Buening, P.E., S.E.
License Expires 11/30/18
Sheets 1, 2, 9-13, 16-19, 23-48
3/21/18 Date

Benjamin Bovee, P.E., S.E.
License Expires 11/30/18
Sheets 14, 15, 20-22
3/21/2018 Date

Don Bell, P.E., S.E.
License Expires 11/30/18
Sheets 3-8
3-21-2018 Date

GENERAL PLAN
IL. RT. 17 OVER EDWARDS RIVER
F.A.P. RT. 639 SECTION (123B)BR-1
MERCER COUNTY
STATION 154+39.31
STRUCTURE NO. 066-0021

FILE NAME = u:\hdoa\53795.8.8\cad\CADD\Structural\gp8.dgn

CHASTAIN & ASSOCIATES LLC
CONSULTING ENGINEERS
184-001397

USER NAME = rsmart	DESIGNED - ACB	REVISED -	
PLOT TIME = 3/20/24 PM	CHECKED - JMB	REVISED -	
PLOT SCALE = 50.00 ' / in.	DRAWN - RLK	REVISED -	
PLOT DATE = 3/20/2018	CHECKED - JMB	REVISED -	

STATE OF ILLINOIS
DEPARTMENT OF TRANSPORTATION

GENERAL PLAN AND ELEVATION
STRUCTURE NO. 066-0021
SHEET NO. 1 OF 48 SHEETS

F.A.P. RTE.	SECTION	COUNTY	TOTAL SHEETS	SHEET NO.
639	(123B)BR-1	MERCER	106	23
		CONTRACT NO. 68663		
		ILLINOIS FED. AID PROJECT		

MODEL: Default
FILE NAME: P:\2023\3698AD - Bridge Painting (FY 2025)\4 CADD - DWG\4.7 TranSheets\0468134\0468134-sht-structural detail 3.dgn

TWM ENGINEERING GEOSPATIAL SERVICES
TWM, INC.
WWW.TWM-INC.COM
IL DESIGN FIRM LICENSE NO: 184-001220

USER NAME = dlee	DESIGNED - JCL	REVISED -	
	DRAWN - JCL	REVISED -	
PLOT SCALE = 10.0000 ' / in.	CHECKED - TBP	REVISED -	
PLOT DATE = 8/6/2024	DATE - JULY 2024	REVISED -	

STATE OF ILLINOIS
DEPARTMENT OF TRANSPORTATION

LOCATION 5 – STRUCTURE INFORMATION
SN 066–0021
SCALE: N/A SHEET 1 OF 14 SHEETS STA. TO STA.

F.A. RTE.	SECTION	COUNTY	TOTAL SHEETS	SHEET NO.
VAR	D4 BRIDGE PAINTING 2025	*	52	30
* HENDERSON, MCDONOUGH, MERCER, WARREN		CONTRACT NO. 68J34		
		ILLINOIS FED. AID PROJECT		

FOR INFORMATION ONLY
LOCATION 5 (IL 17 OVER EDWARDS RIVER)
SN 066-0021

INDEX OF SHEETS

1 General Plan and Elevation
2 General Data
3 Footing Layout - Cofferdams
4 Stage Construction - Superstructure
5 Stage Construction - Existing Abutments
6 Stage Construction - Existing Piers
7 Soil Retention Details
8 Temporary Concrete Barrier for Stage Construction
9 Top of Slab Elevation Layout
10 Top of Slab Elevations
11 Top of Slab Elevations
12 Top of Slab Elevations
13 Top of Slab Elevations
14 Top of West Approach Elevations
15 Top of East Approach Elevations
16 Superstructure
17 Superstructure
18 Superstructure Details
19 Superstructure Details
20 West Approach Slab Details
21 East Approach Slab Details
22 Approach Slab Details
23 Finger Plate Expansion Joint-West Abutment
24 Finger Plate Expansion Joint Details
25 Finger Plate Expansion Joint Details
26 Preformed Joint Strip Seal
27 Drainage Scupper, DS-11
28 Framing Plan - Spans 1, 2 & 3
29 Framing Plan - Spans 4 & 5
30 Framing Details
31 Framing Details
32 Girder Moment and Reaction Tables
33 Bearing Details
34 Bearing Details
35 West Abutment
36 East Abutment
37 Abutment Details
38 Pier 1 Details
39 Pier 2 Details
40 Pier 3 Details
41 Pier 4 Details
42 Metal Shell Pile Details
43 Bar Splicer Assembly and Mechanical Splicer Details
44 U.S.G.S. Gage House
45 U.S.G.S. Gage House
46 Concrete Parapet Slipforming Option
47 Subsurface Profile
48 Subsurface Profile

GENERAL NOTES:

Fasteners shall be ASTM A325 Type 1, mechanically galvanized bolts in painted areas and ASTM A325 Type 3 in unpainted areas. Bolts 7/8 in. ϕ, holes 15/16 in. ϕ, unless otherwise noted.

Calculated weight of Structural Steel = 744,980 lb

All structural steel shall be AASHTO M 270 Grade 50W except expansion joints and expansion bearings at expansion joints shall be AASHTO M270 Grade 50.

No field welding is permitted except as specified in the contract documents.

Reinforcement bars designated (E) shall be epoxy coated.

Bearing seat surfaces shall be constructed or adjusted to their designated elevations within a tolerance of 1/8 inch (0.01 ft.). Adjustment shall be made either by grinding the surface or by shimming the bearings.

Concrete Sealer shall be applied to the designated areas of the abutments.

All structural steel girders and diaphragms within a distance of 10 ft. from the expansion joints shall be metalized and painted with a color matching the Federal Color Standard 595a 20045 as specified in the Special Provisions for Metalizing Structural Steel. All structural steel components of diaphragms within a distance of 10 ft. from the expansion joints may be galvanized in lieu of metalizing at the Contractor's option. If galvanizing is used, all structural steel components of diaphragm shall be AASHTO M270 Grade 50. Galvanizing shall be according to the Special Provision for Hot Dip Galvanizing for Structural Steel. Bearings at the abutments shall be hot dip galvanized..

Layout of slope protection system may be varied to suit ground conditions in the field as directed by the Engineer.

The embankment configuration shown shall be the minimum that must be placed and compacted prior to construction of the west abutment.

Seal coat thickness design is based on the Cofferdam Design Water Elevation (CDWE). Cofferdam design details and proposed changes in seal coat thickness shall be submitted to the Engineer for approval with the cofferdam design.

The Contractor is advised that the existing PPC Deck Beams are in a deteriorated condition with a reduced load carrying capacity. It is the Contractor's responsibility to account for the condition of the beams when developing construction procedures for removal and replacement of the superstructure.

If the Contrctor's procedures for existing deck beam removal involves placement of heavy equipment on the existing deck beams, a detailed procedure shall be submitted to the Engineer for approval. The procedure shall include calculations, sealed by an Illinois Licensed Structural Engineer, verifying the structural adequacy of the beams for the proposed loads. Cost included with Removal of Existing Structures.

TOTAL BILL OF MATERIAL

Item	Unit	Super	Sub	Total
Removal of Existing Structures	Each	1	---	1
Structure Excavation	Cu. Yd.	---	300	300
Cofferdam Excavation	Cu. Yd.	---	896	896
Cofferdam (Type 2) (Location - 1)	Each	---	1	1
Cofferdam (Type 2) (Location - 2)	Each	---	1	1
Concrete Structures	Cu. Yd.	---	406.1	406.1
Concrete Superstructure	Cu. Yd.	695.2	---	695.2
Bridge Deck Grooving	Sq. Yd.	2227	---	2227
Seal Coat Concrete	Cu. Yd.	---	194.8	194.8
Protective Coat	Sq. Yd.	2909	---	2909
Concrete Superstructure (Approach Slab)	Cu. Yd.	96.0	---	96.0
Furnishing and Erecting Structural Steel	L. Sum	1	---	1
Stud Shear Connectors	Each	7920	---	7920
Reinforcement Bars, Epoxy Coated	Pound	217000	39350	256350
Bar Splicers	Each	1934	466	2400
Furnishing Metal Shell Piles 14" x 0.312"	Foot	---	4171	4171
Driving Piles	Foot	---	4171	4171
Test Pile Metal Shells	Each	---	3	3
Name Plates	Each	1	---	1
Preformed Joint Strip Seal	Foot	36	---	36
Finger Plate Expansion Joint, 3"	Foot	33	---	33
Fabric Reinforced Elastomeric Trough	Foot	40	---	40
Elastomeric Bearing Assembly, Type I	Each	---	18	18
Elastomeric Bearing Assembly, Type II	Each	---	12	12
Anchor Bolts, 3/4"	Each	---	24	24
Anchor Bolts, 1 1/4"	Each	---	12	12
Anchor Bolts, 1 1/2"	Each	---	36	36
Temporary Sheet Piling	Sq. Ft.	---	1186	1186
Temporary Soil Retention System	Sq. Ft.	---	166	166
Concrete Sealer	Sq. Ft.	---	830	830
Geocomposite Wall Drain	Sq. Yd.	---	92	92
Conduit Attached to Structure, 1" Dia., Galvanized Steel	Foot	---	100	100
USGS Gage Equipment Cabinet, Special	Each	---	1	1
Granular Backfill for Structures	Cu. Yd.	---	135	135
Asbestos Bearing Pad Removal	Each	---	198	198
Drainage Scuppers, DS-11	Each	16	---	16
Pipe Underdrains for Structures 4"	Foot	---	140	140
Temporary Support System	Each	---	9	9

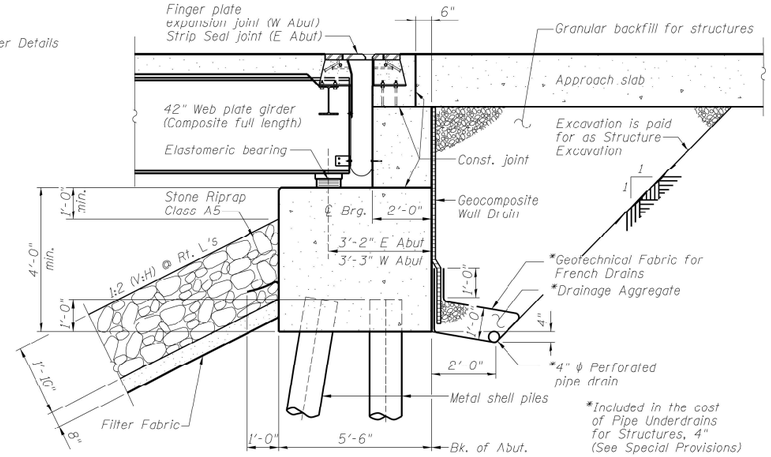

SECTION THRU PILE SUPPORTED STUB ABUTMENT

(Horiz. dim. @ Rt. L's)

Note:
All drainage system components shall extend parallel to the abutment back wall until they intersect the wingwalls or 2'-0" from the end of the wingwalls when the wings are parallel to the abutment. The pipe shall extend under the wingwall, if necessary, until intersecting the side slopes. The pipes shall drain into concrete headwalls. (See Article 601.05 of the Standard Specifications and Highway Standard 601101).

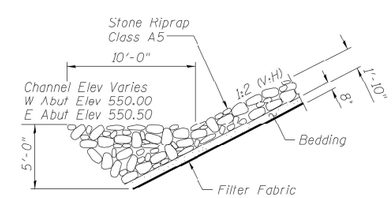

SECTION A-A

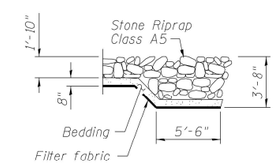

SECTION B-B

FILE NAME = p:\dot\5375_jr-tel7\CADD_Structural\gnbon.dgn

CHASTAIN & ASSOCIATES LLC CONSULTING ENGINEERS 184-001397	USER NAME = csiefert	DESIGNED - ACB	REVISED -	STATE OF ILLINOIS DEPARTMENT OF TRANSPORTATION	GENERAL DATA STRUCTURE NO. 066-0021	F.A.P. RTE. 639	SECTION (123B)BR-1	COUNTY MERCER	TOTAL SHEETS 106	SHEET NO. 24
	PLOT TIME = 7:11:20 AM	CHECKED - JMB	REVISED -		SHEET NO. 2 OF 48 SHEETS			CONTRACT NO. 68663		
	PLOT SCALE = 2.0000 ' / in.	DRAWN - RLK	REVISED -					ILLINOIS FED. AID PROJECT		
	PLOT DATE = 3/21/2018	CHECKED - JMB	REVISED -							

MODEL: Default
FILE NAME: P:\2023\23093410 - Bridge Painting (FY 2025)\4 CADD - DWG\4.7 TranSheets\D468134\D468134-sht-structural detail 5.dgn

TWM ENGINEERING GEOSPATIAL SERVICES	TWM, INC. WWW.TWM-INC.COM IL DESIGN FIRM LICENSE NO: 184-001220	USER NAME = dlee	DESIGNED - JCL	REVISED -	STATE OF ILLINOIS DEPARTMENT OF TRANSPORTATION	LOCATION 5 – STRUCTURE INFORMATION SN 066-0021	F.A. RTE.	SECTION	COUNTY	TOTAL SHEETS	SHEET NO.
			DRAWN - JCL	REVISED -			VAR	D4 BRIDGE PAINTING 2025	*	52	31
		PLOT SCALE = 10.0000 ' / in.	CHECKED - TBP	REVISED -			* HENDERSON, MCDONOUGH, MERCER, WARREN		CONTRACT NO. 68134		
		PLOT DATE = 8/6/2024	DATE - JULY 2024	REVISED -		SCALE: N/A SHEET 2 OF 14 SHEETS STA. TO STA.			ILLINOIS FED. AID PROJECT		

FOR INFORMATION ONLY

LOCATION 5 (IL 17 OVER EDWARDS RIVER)

SN 066–0021

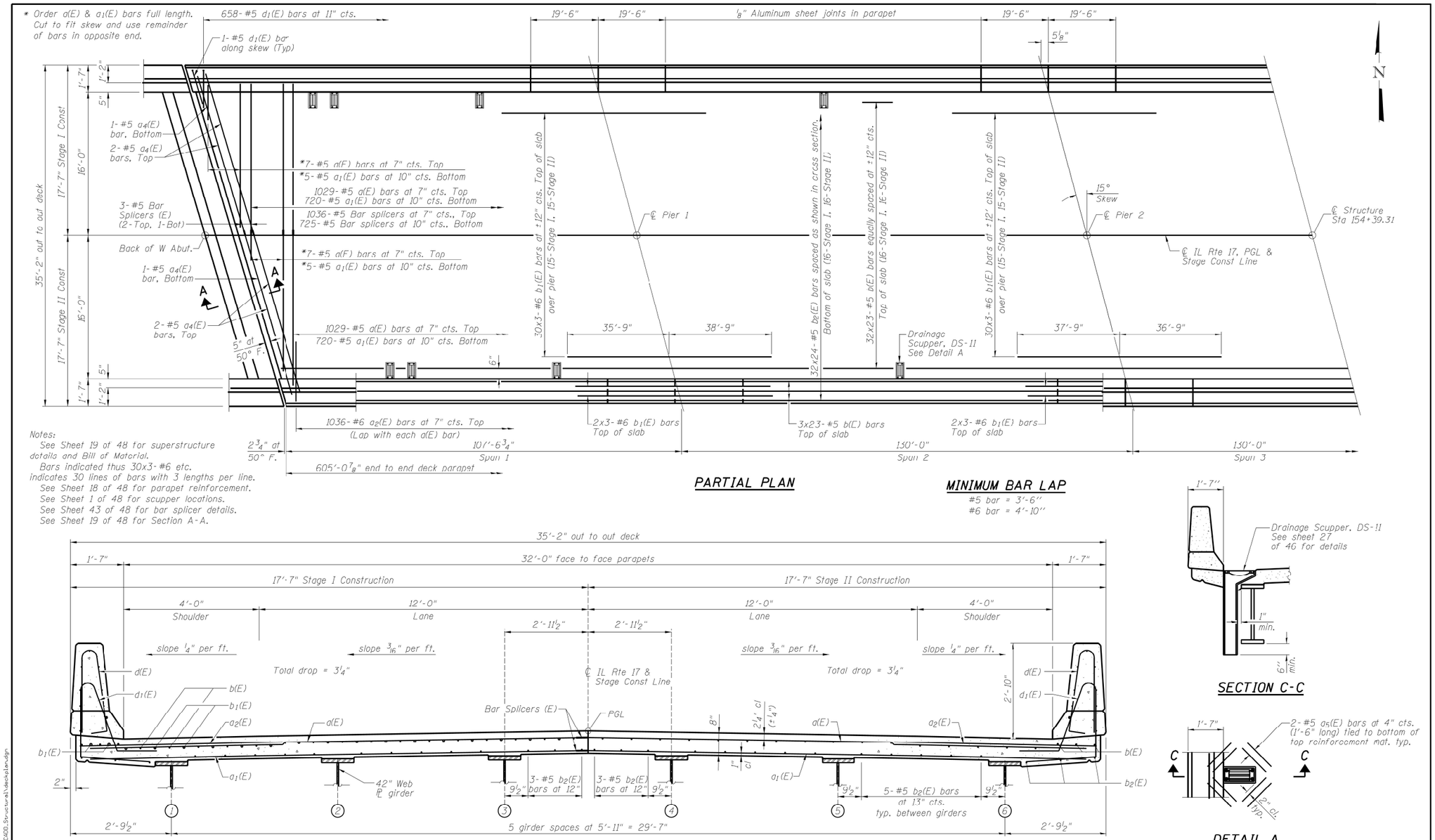

Notes:
See Sheet 19 of 48 for superstructure details and Bill of Material.
Bars indicated thus 30x3-#6 etc. indicates 30 lines of bars with 3 lengths per line.
See Sheet 18 of 48 for parapet reinforcement.
See Sheet 1 of 48 for scupper locations.
See Sheet 43 of 48 for bar splicer details.
See Sheet 19 of 48 for Section A-A.

PARTIAL PLAN

MINIMUM BAR LAP

#5 bar = 3'-6"
#6 bar = 4'-10"

NEAR PIERS

CROSS SECTION

(Looking Up Station)

NEAR MIDSPAN

SECTION C-C

DETAIL A

Note:
Cut longitudinal reinforcement to clear drainage scuppers.

FILE NAME = n:\ridot\5375_jr-ia17\C400_Structural\deck plan.dgn

CHASTAIN & ASSOCIATES LLC, CONSULTING ENGINEERS, 184-001397	USER NAME = csiefert	DESIGNED - ACB	REVISED -
	PLOT TIME = 7:11:26 AM	CHECKED - JMB	REVISED -
	PLOT SCALE = 16.0000 ' / in.	DRAWN - RLK	REVISED -
	PLOT DATE = 3/21/2018	CHECKED - JMB	REVISED -

STATE OF ILLINOIS
DEPARTMENT OF TRANSPORTATION

SUPERSTRUCTURE
STRUCTURE NO. 066–0021
SHEET NO. 16 OF 48 SHEETS

F.A.P. RTE.	SECTION	COUNTY	TOTAL SHEETS	SHEET NO.
639	(123B)BR-1	MERCER	106	38
		CONTRACT NO. 68663		
		ILLINOIS FED. AID PROJECT		

MODEL: Default
FILE NAME: P:\D23\23098AID - Bridge Painting (FY 2023)\A CADD - DWG\4.7 Tran\Sheets\0468134\0468134-sht-structural detail 5.dgn

TWM ENGINEERING & GEOSPATIAL SERVICES
TWM, INC.
WWW.TWM-INC.COM
IL DESIGN FIRM LICENSE NO: 184-001220

USER NAME = dlee	DESIGNED - JCL	REVISED -	
	DRAWN - JCL	REVISED -	
PLOT SCALE = 10.0000 ' / in.	CHECKED - TBP	REVISED -	
PLOT DATE = 8/6/2024	DATE - JULY 2024	REVISED -	

STATE OF ILLINOIS
DEPARTMENT OF TRANSPORTATION

LOCATION 5 – STRUCTURE INFORMATION
SN 066–0021

SCALE: N/A | SHEET 3 OF 14 SHEETS | STA. | TO STA.

F.A. RTE.	SECTION	COUNTY	TOTAL SHEETS	SHEET NO.
VAR	D4 BRIDGE PAINTING 2025	*	52	32
	* HENDERSON, MCDONOUGH, MERCER, WARREN	CONTRACT NO. 68J34		
		ILLINOIS FED. AID PROJECT		

FOR INFORMATION ONLY

LOCATION 5 (IL 17 OVER EDWARDS RIVER)

SN 066–0021

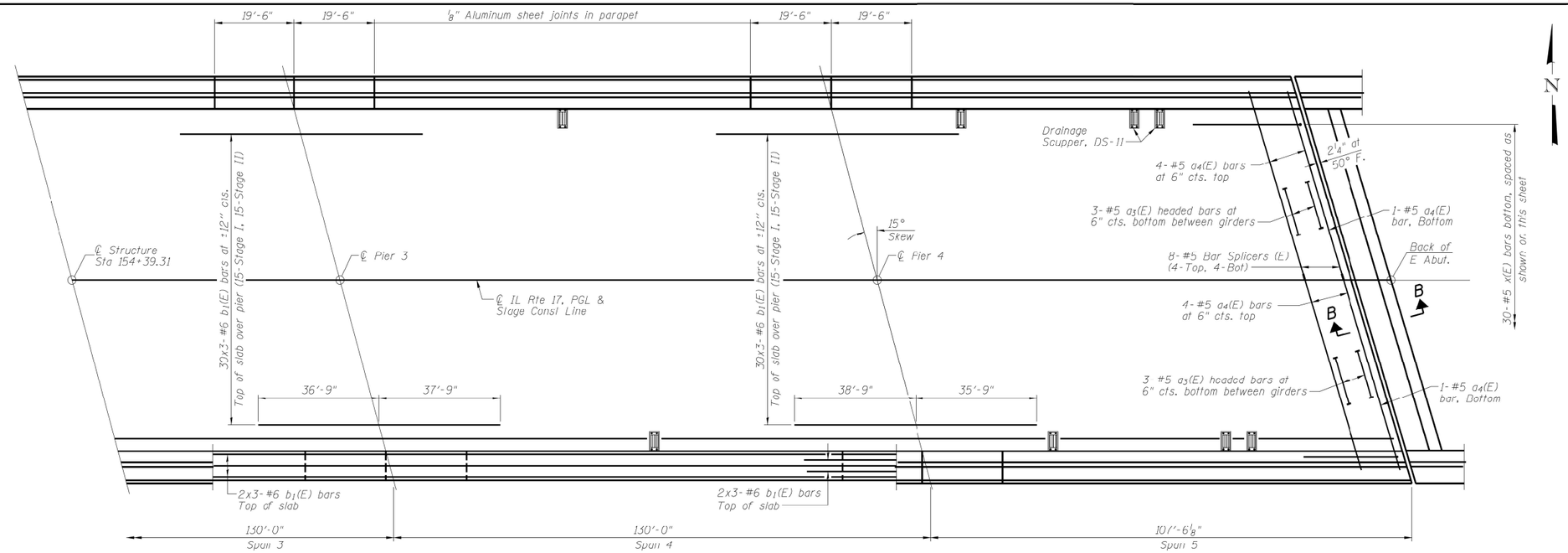

PARTIAL PLAN

MINIMUM BAR LAP

#5 bar = 3'-6"
#6 bar = 3'-7"

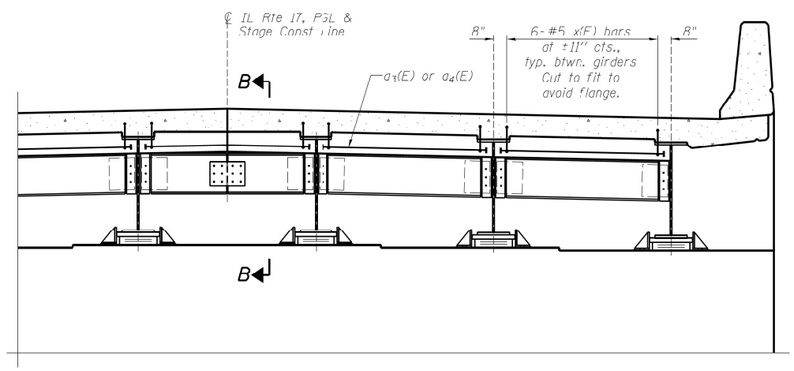

DIAPHRAGM AT EAST ABUTMENT

Notes:
The x(E) bars shall be placed parallel to the girders. Spacing for these bars shall be at right angles to the girders.
For details of bar x(E) see sheet 19 of 48.
See Sheet 19 of 40 for superstructure details and Bill of Material.
Bars indicated thus 30x3-#6 etc. indicates 30 lines of bars with 3 lengths per line.
See Sheet 19 of 18 for Section B-B.
See Sheet 18 of 48 for parapet reinforcement.
See Sheet 1 of 48 for scupper locations.
See Sheet 43 of 48 for bar splicer details and the bar splicer assembly to be used at the Stage construction joint for a3(E) bars.

FILE NAME = s:\dot\5375_jrtel7\C400_Structural\deckplan.dgn

CHASTAIN & ASSOCIATES LLC CONSULTING ENGINEERS 184-001397	USER NAME = csaefert	DESIGNED - ACB	REVISED -	STATE OF ILLINOIS DEPARTMENT OF TRANSPORTATION	SUPERSTRUCTURE STRUCTURE NO. 066–0021
	PLOT TIME = 7:11:26 AM	CHECKED - JMB	REVISED -		
	PLOT SCALE = 16.0000 ' / in.	DRAWN - RLK	REVISED -		
	PLOT DATE = 3/21/2018	CHECKED - JMB	REVISED -		SHEET NO. 17 OF 48 SHEETS

F.A.P. RTE.	SECTION	COUNTY	TOTAL SHEETS	SHEET NO.
639	(123B)BR-1	MERCER	106	39
		CONTRACT NO. 68663		
		ILLINOIS FED. AID PROJECT		

MODEL: Default
FILE NAME: P:\2023\23098AID - Bridge Painting IFY 2025\14 CADD - DWG\4.7 Trans\Sheets\D468J34\D468J34-sht-structural detail 5.dgn

TWM ENGINEERING GEOSPATIAL SERVICES	TWM, INC. WWW.TWM-INC.COM IL DESIGN FIRM LICENSE NO: 184-001220	USER NAME = dlee	DESIGNED - JCL	REVISED -	STATE OF ILLINOIS DEPARTMENT OF TRANSPORTATION
			DRAWN - JCL	REVISED -	
		PLOT SCALE = 10.0000 ' / in.	CHECKED - TBP	REVISED -	
		PLOT DATE = 8/6/2024	DATE - JULY 2024	REVISED -	

LOCATION 5 – STRUCTURE INFORMATION
SN 066–0021

SCALE: N/A | SHEET 4 OF 14 SHEETS | STA. TO STA.

F.A. RTE.	SECTION	COUNTY	TOTAL SHEETS	SHEET NO.
VAR	D4 BRIDGE PAINTING 2025	*	52	33
	* HENDERSON, MCDONOUGH, MERCER, WARREN	CONTRACT NO. 68J34		
		ILLINOIS FED. AID PROJECT		

FOR INFORMATION ONLY
LOCATION 5 (IL 17 OVER EDWARDS RIVER)
SN 066–0021

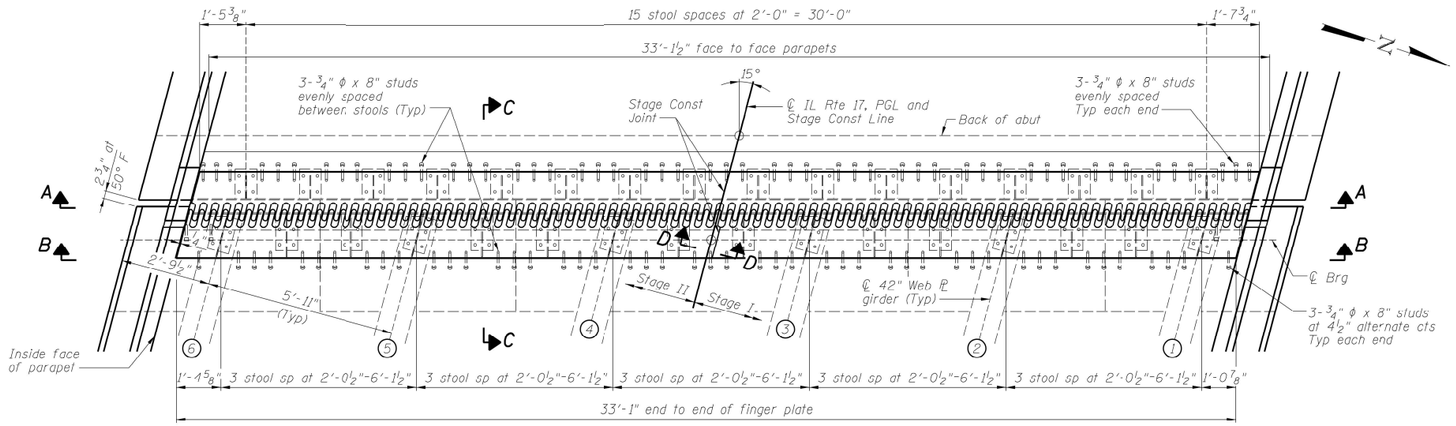

PLAN OF FINGER PLATE EXPANSION DEVICE AT WEST ABUTMENT

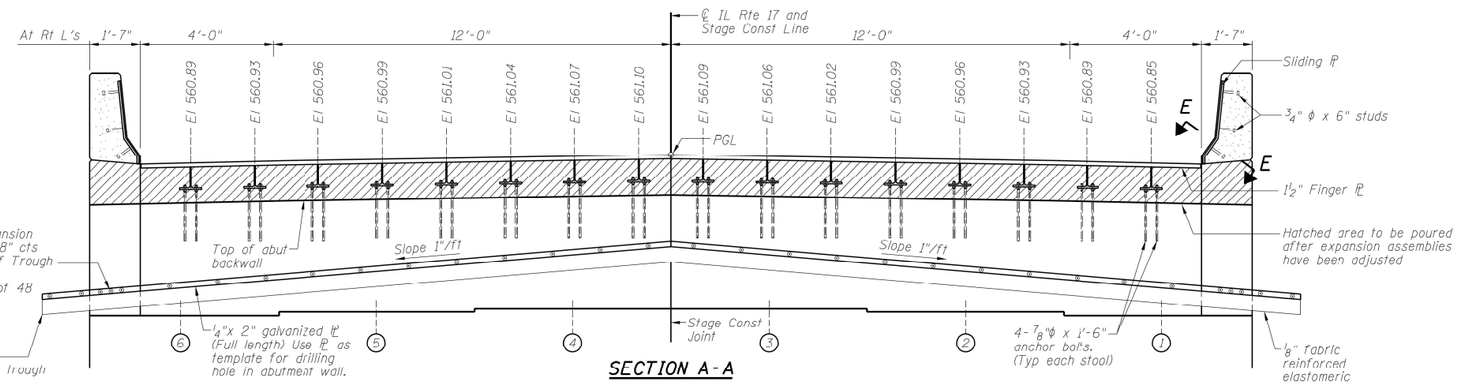

SECTION A-A

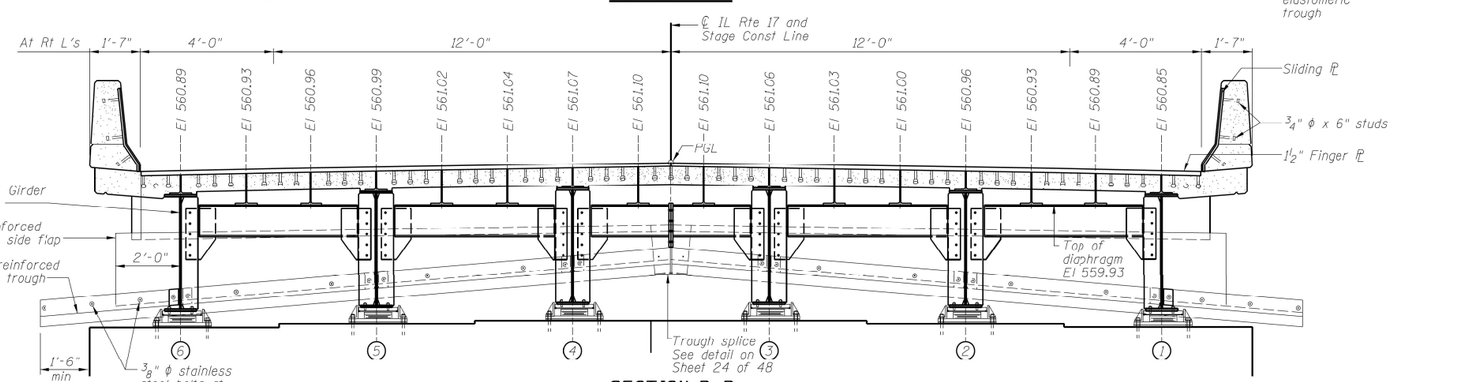

SECTION B-B

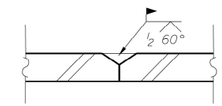

SECTION D-D

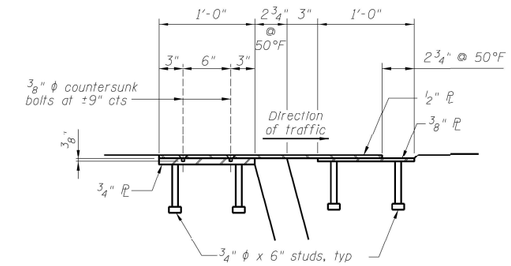

SECTION E-E

NOTES:

Elevations shown in Section A-A are taken along front face of backwall at bottom of 1 1/2" finger ℙ.

Elevations shown in Section B-B are taken at ℄ bearing at bottom of 1 1/2" finger ℙ.

See Sheet 30 of 48 for top of web elevations.

See Sheet 28 of 48 for top flange thickness.

Heights of stools for finger ℙ varies.

See Sheet 24 of 48 for Section C-C.

FILE NAME = s:\dot\1375_jr-ref7\C400_Structure3\finger_plate.dgn

CHASTAIN & ASSOCIATES LLC CONSULTING ENGINEERS 184-001397	USER NAME = csiefert	DESIGNED - ACB	REVISED -	STATE OF ILLINOIS DEPARTMENT OF TRANSPORTATION	FINGER PLATE EXPANSION JOINT – WEST ABUTMENT STRUCTURE NO. 066–0021
	PLOT TIME = 7:11:30 AM	CHECKED - JMB	REVISED -		
	PLOT SCALE = 40 ' / in.	DRAWN - RLK	REVISED -		
	PLOT DATE = 3/21/2018	CHECKED - JMB	REVISED -		SHEET NO. 23 OF 48 SHEETS

F.A.P. RTE.	SECTION	COUNTY	TOTAL SHEETS	SHEET NO.
639	(123B)BR-1	MERCER	106	45
		CONTRACT NO. 68663		
		ILLINOIS FED. AID PROJECT		

MODEL: Default
FILE NAME: P:\2023\3598410 - Bridge Painting (FY 2025)\4 CADD - DWG\4.7 TransSheets\D468J34\D468J34-sht-structural detail 5.dgn

TWM ENGINEERING GEOSPATIAL SERVICES	TWM, INC. www.TWM-INC.COM IL DESIGN FIRM LICENSE NO: 184-001220	USER NAME = dlee	DESIGNED - JCL	REVISED -	STATE OF ILLINOIS DEPARTMENT OF TRANSPORTATION	LOCATION 5 – STRUCTURE INFORMATION SN 066–0021
			DRAWN - JCL	REVISED -		
		PLOT SCALE = 10.0000 ' / in.	CHECKED - TBP	REVISED -		
		PLOT DATE = 8/6/2024	DATE - JULY 2024	REVISED -		SCALE: N/A SHEET 5 OF 14 SHEETS STA. TO STA.

F.A. RTE.	SECTION	COUNTY	TOTAL SHEETS	SHEET NO.
VAR	D4 BRIDGE PAINTING 2025	*	52	34
	* HENDERSON, MCDONOUGH, MERCER, WARREN	CONTRACT NO. 68J34		
		ILLINOIS FED. AID PROJECT		

FOR INFORMATION ONLY

LOCATION 5 (IL 17 OVER EDWARDS RIVER)

SN 066–0021

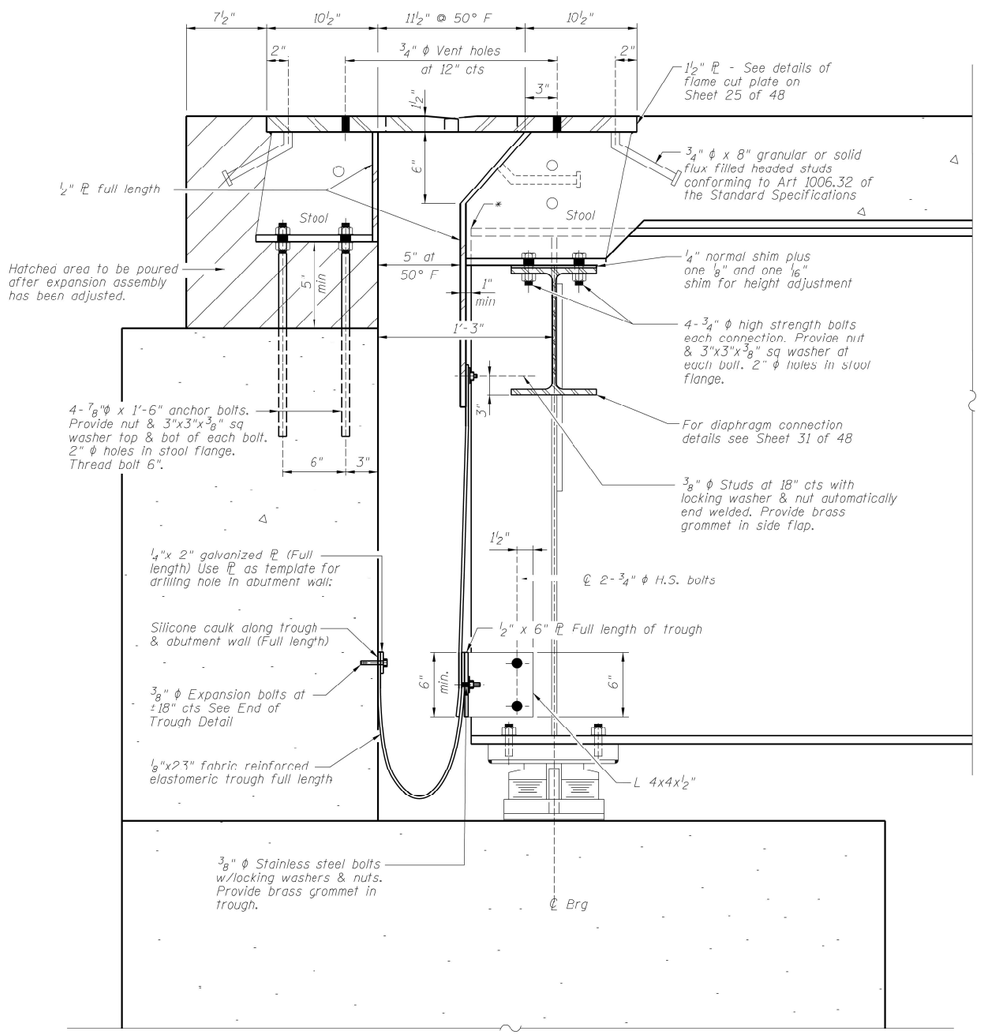

SECTION C-C

*Cut end of girder parallel to skew. See Sheet 30 of 48.

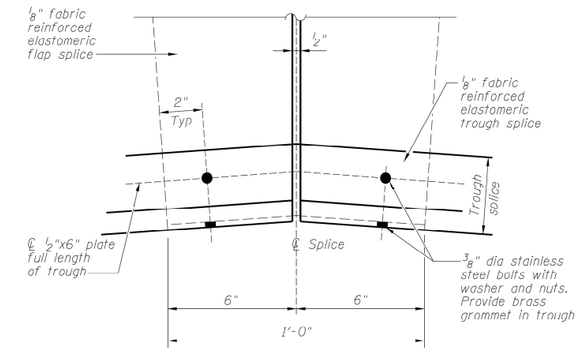

TROUGH SPLICE DETAIL

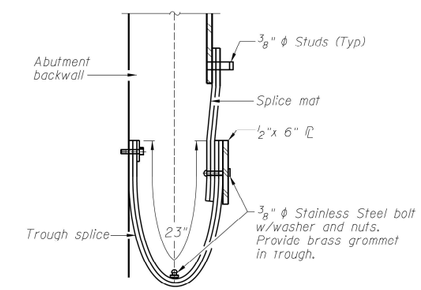

SECTION THRU TROUGH SPLICE

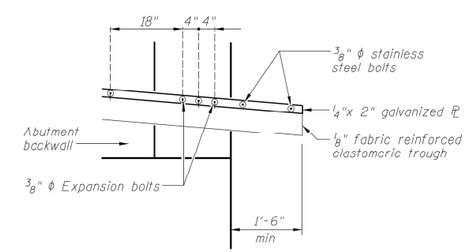

END OF TROUGH DETAIL

FILE NAME = p:\idot\5275_ul-ed7\CADD_Structural\finger_pl.dgn

CHASTAIN & ASSOCIATES LLC CONSULTING ENGINEERS 184-001397	USER NAME = csiefert	DESIGNED - ACB	REVISED -	STATE OF ILLINOIS DEPARTMENT OF TRANSPORTATION	FINGER PLATE EXPANSION JOINT DETAILS STRUCTURE NO. 066–0021	F.A.P. RTE. 639	SECTION (123B)BR-1	COUNTY MERCER	TOTAL SHEETS 106	SHEET NO. 46
	PLOT TIME = 7:11:32 AM	CHECKED - JMB	REVISED -					CONTRACT NO. 68663		
	PLOT SCALE = 2.0000 ' / in.	DRAWN - RLK	REVISED -					ILLINOIS FED. AID PROJECT		
	PLOT DATE = 3/21/2018	CHECKED - JMB	REVISED -		SHEET NO. 24 OF 48 SHEETS					

MODEL: Default
FILE NAME: P:\2023\3038AID - Bridge Painting (FY 2025)\4 CADD - DWG\4.7 TranSheets\(h46834)\h46834-sht-structural detail 5.dgn

TWM ENGINEERING GEOSPATIAL SERVICES	TWM, INC. WWW.TWM-INC.COM IL DESIGN FIRM LICENSE NO: 184-001220	USER NAME = dlee	DESIGNED - JCL	REVISED -	STATE OF ILLINOIS DEPARTMENT OF TRANSPORTATION	LOCATION 5 – STRUCTURE INFORMATION SN 066–0021	F.A. RTE. VAR	SECTION D4 BRIDGE PAINTING 2025	COUNTY *	TOTAL SHEETS 52	SHEET NO. 35
			DRAWN - JCL	REVISED -			* HENDERSON, MCDONOUGH, MERCER, WARREN		CONTRACT NO. 68J34		
		PLOT SCALE = 10.0000 ' / in.	CHECKED - TBP	REVISED -					ILLINOIS FED. AID PROJECT		
		PLOT DATE = 8/6/2024	DATE - JULY 2024	REVISED -		SCALE: N/A SHEET 6 OF 14 SHEETS STA. TO STA.					

FOR INFORMATION ONLY
LOCATION 5 (IL 17 OVER EDWARDS RIVER)
SN 066–0021

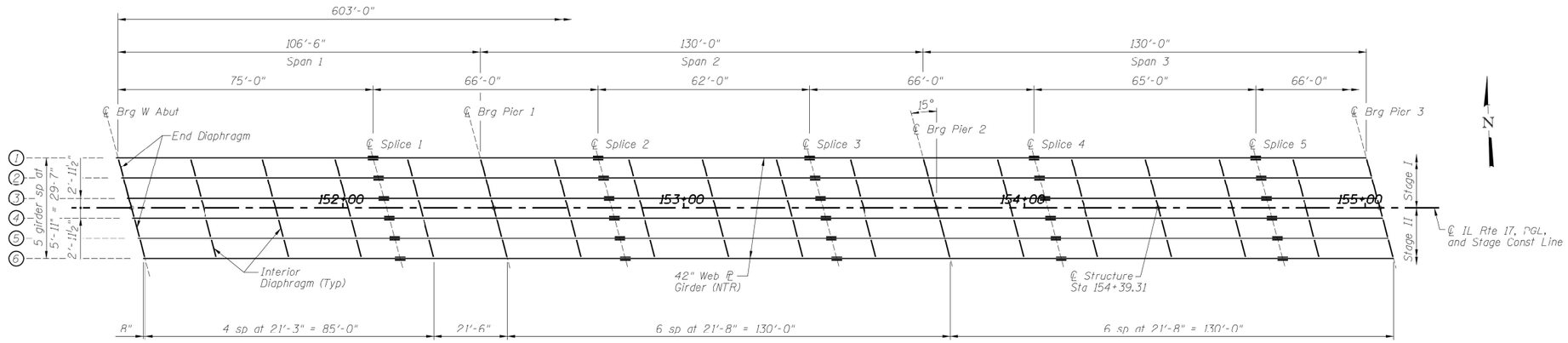

STEEL FRAMING PLAN - SPANS 1, 2 & 3

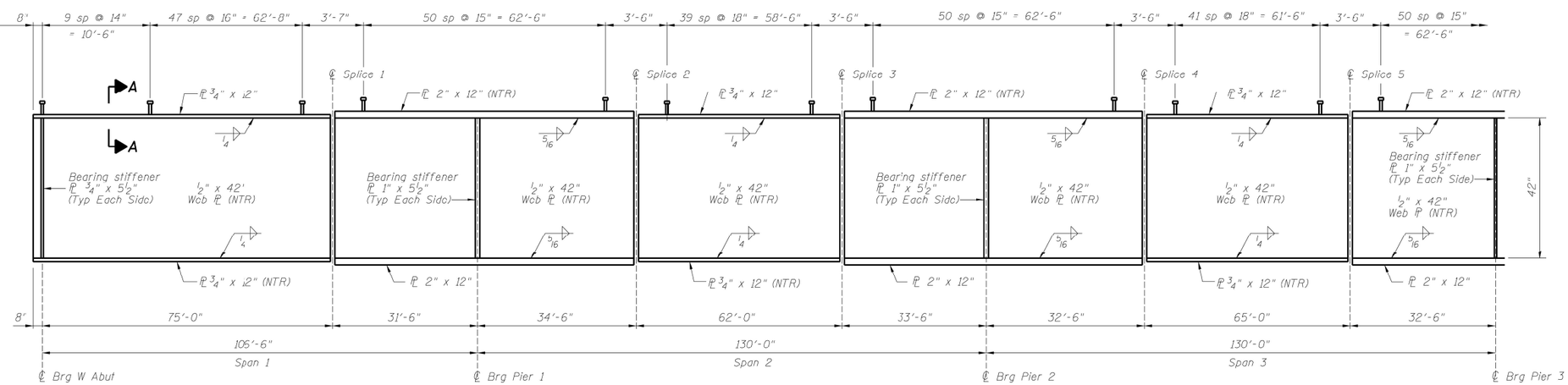

GIRDER ELEVATION

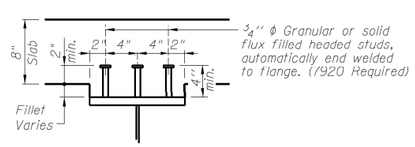

SECTION A-A

NOTES:

All girders, splice plates, diaphragms, and bearing stiffeners shall be AASHTO M270 Grade 50W.

Load carrying components designated "NTR" shall conform to the Impact Testing Requirement, Zone 2.

FILE NAME = P:\Jobs\5275_IL-ed7\CADD_Structural\Framing plan1.dgn

CHASTAIN & ASSOCIATES LLC, CONSULTING ENGINEERS, 184-001397	USER NAME = cswiert	DESIGNED - ACB	REVISED -	STATE OF ILLINOIS DEPARTMENT OF TRANSPORTATION	FRAMING PLAN – SPANS 1, 2, & 3 STRUCTURE NO. 066–0021
	PLOT TIME = 7:11:37 AM	CHECKED - JMB	REVISED -		
	PLOT SCALE = 32.0000 ' / in.	DRAWN - RLK	REVISED -		
	PLOT DATE = 3/21/2018	CHECKED - JMB	REVISED -		SHEET NO. 28 OF 48 SHEETS

F.A.P. RTE.	SECTION	COUNTY	TOTAL SHEETS	SHEET NO.
639	(123B)BR-1	MERCER	106	50
		CONTRACT NO. 68663		
		ILLINOIS	FED. AID PROJECT	

MODEL: Default
FILE NAME: P:\2023\3098AID - Bridge Painting (FY 2025)\4 CADD - DWG\4.7 TranSheets\D468134\D468134-sht-structural detail 5.dgn

TWM ENGINEERING & GEOSPATIAL SERVICES	TWM, INC. WWW.TWM-INC.COM IL DESIGN FIRM LICENSE NO: 184-001220	USER NAME = dlee	DESIGNED - JCL	REVISED -	STATE OF ILLINOIS DEPARTMENT OF TRANSPORTATION
			DRAWN - JCL	REVISED -	
		PLOT SCALE = 10.0000 ' / in.	CHECKED - TBP	REVISED -	
		PLOT DATE = 8/6/2024	DATE - JULY 2024	REVISED -	

LOCATION 5 – STRUCTURE INFORMATION
SN 066–0021

SCALE: N/A | SHEET 7 OF 14 SHEETS | STA. | TO STA.

F.A. RTE.	SECTION	COUNTY	TOTAL SHEETS	SHEET NO.
VAR	D4 BRIDGE PAINTING 2025	*	52	36
* HENDERSON, MCDONOUGH, MERCER, WARREN		CONTRACT NO. 68J34		
	ILLINOIS	FED. AID PROJECT		

FOR INFORMATION ONLY
LOCATION 5 (IL 17 OVER EDWARDS RIVER)
SN 066–0021

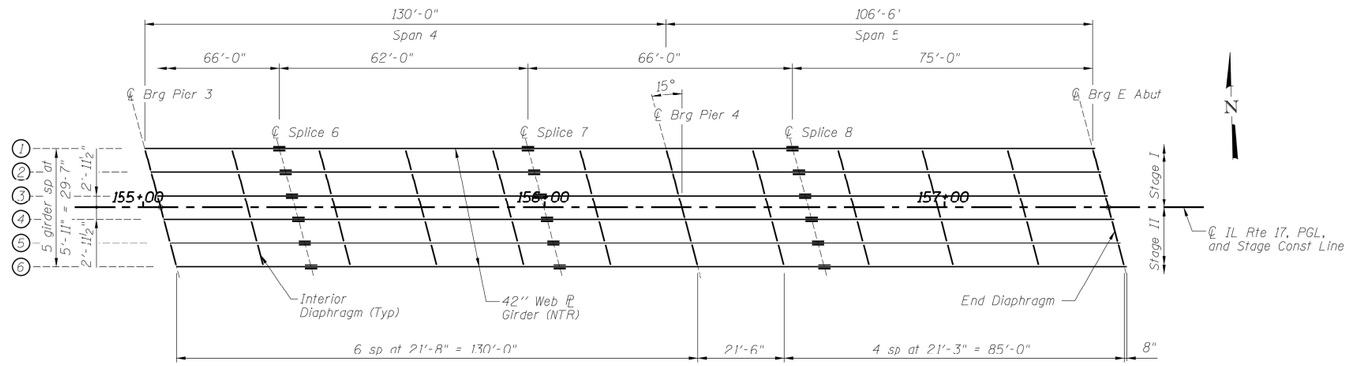

STEEL FRAMING PLAN - SPANS 4 & 5

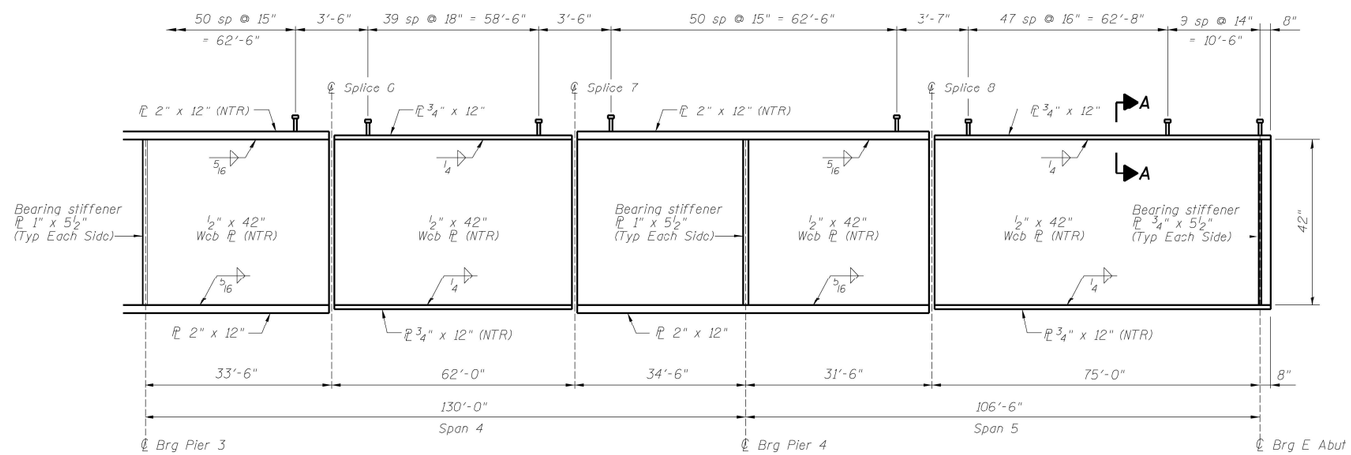

GIRDER ELEVATION

NOTES:

All girders, splice plates, diaphragms and bearing stiffeners shall be AASHTO M270 Grade 50W.

Load carrying components designated "NTR" shall conform to the Impact Testing Requirement, Zone 2.

FILE NAME = 10\dot\5275_ul-ed7\CADD\Structural\-earingplate2.dgn

CHASTAIN & ASSOCIATES LLC CONSULTING ENGINEERS 184-001397	USER NAME = cseifert	DESIGNED - ACB	REVISED -	STATE OF ILLINOIS DEPARTMENT OF TRANSPORTATION	FRAMING PLAN – SPANS 4 & 5 STRUCTURE NO. 066–0021	F.A.P. RTE.	SECTION	COUNTY	TOTAL SHEETS / SHEET NO.
	PLOT TIME = 7:11:38 AM	CHECKED - JMB	REVISED -			639	(123B)BR-1	MERCER	106 / 51
	PLOT SCALE = 32.0000 ' / in.	DRAWN - RLK	REVISED -					CONTRACT NO. 68663	
	PLOT DATE = 3/21/2018	CHECKED - JMB	REVISED -		SHEET NO. 29 OF 48 SHEETS			ILLINOIS FED. AID PROJECT	

MODEL: Default
FILE NAME: P:\2023\3098AID - Bridge Painting FY 2025\4 CADD - DWG\4.7 TranSheets\0468134\0468134-sht-structural detail 5.dgn

TWM ENGINEERING & GEOSPATIAL SERVICES	TWM, INC. WWW.TWM-INC.COM IL DESIGN FIRM LICENSE NO: 184-001220	USER NAME = dlee	DESIGNED - JCL	REVISED -	STATE OF ILLINOIS DEPARTMENT OF TRANSPORTATION	LOCATION 5 – STRUCTURE INFORMATION SN 066–0021	F.A. RTE.	SECTION	COUNTY / TOTAL SHEETS / SHEET NO.
			DRAWN - JCL	REVISED -			VAR	D4 BRIDGE PAINTING 2025	* / 52 / 37
		PLOT SCALE = 10.0000 ' / in.	CHECKED - TBP	REVISED -			* HENDERSON, MCDONOUGH, MERCER, WARREN		CONTRACT NO. 68J34
		PLOT DATE = 8/6/2024	DATE - JULY 2024	REVISED -		SCALE: N/A SHEET 8 OF 14 SHEETS STA. TO STA.		ILLINOIS FED. AID PROJECT	

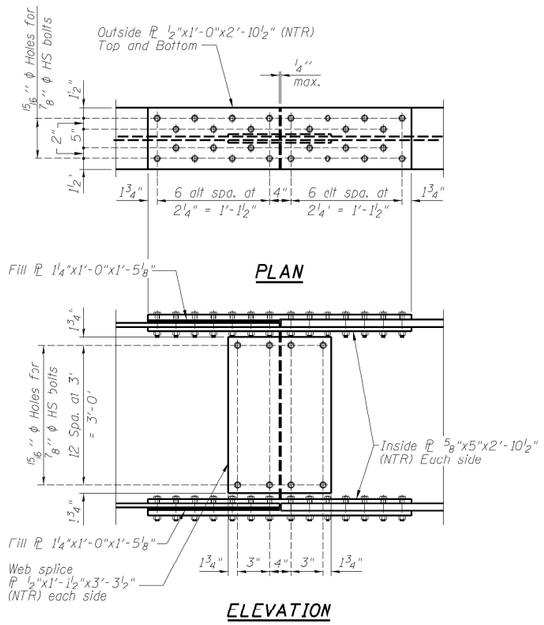

SPLICE DETAIL
(48 Required)

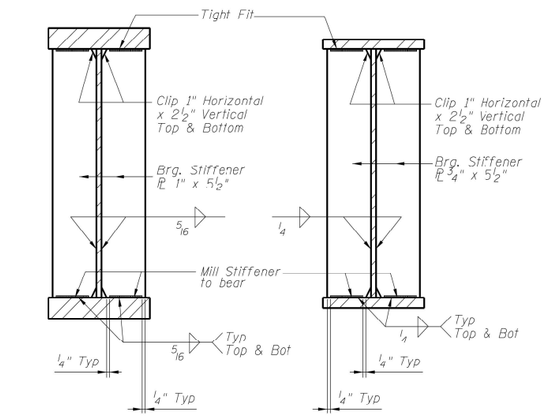

SECTION AT PIER

SECTION AT ABUTMENT

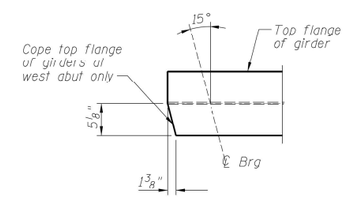

TOP FLANGE COPING DETAIL

TOP OF WEB ELEVATIONS

(For Fabrication Only)

Location	Girder 1	Girder 2	Girder 3	Girder 4	Girder 5	Girder 6
CL Brg at W. Abut	560.18	560.30	560.40	560.41	560.32	560.22
CL Splice 1	560.47	560.58	560.68	560.69	560.61	560.51
CL Brg at Pier 1	560.61	560.73	560.83	560.83	560.75	560.65
CL Splice 2	560.77	560.88	560.98	560.99	560.91	560.81
CL Splice 3	561.10	561.22	561.32	561.33	561.24	561.14
CL Brg at Pier 2	561.26	561.37	561.47	561.48	561.40	561.30
CL Splice 4	561.41	561.52	561.62	561.62	561.53	561.43
CL Splice 5	561.47	561.58	561.67	561.67	561.57	561.46
CL Brg at Pier 3	561.35	561.46	561.54	561.54	561.44	561.33
CL Splice 6	561.23	561.33	561.41	561.41	561.30	561.19
CL Splice 7	560.85	560.95	561.04	561.03	560.93	560.81
Cl Brg at Pier 4	560.68	560.78	560.87	560.86	560.76	560.64
CL Splice 8	560.53	560.63	560.71	560.70	560.60	560.49
CL Brg at E. Abut	560.21	560.31	560.40	560.39	560.29	560.17

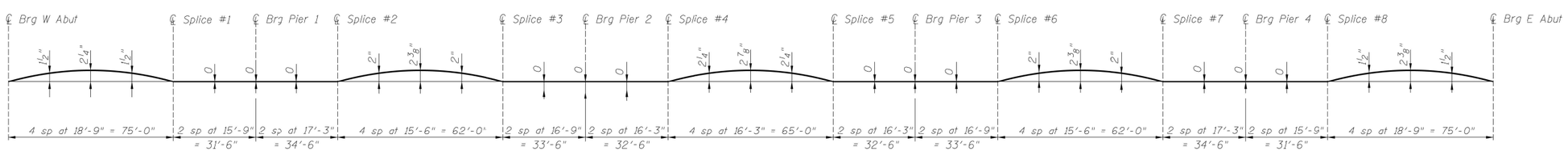

CAMBER DIAGRAM

NOTES

Load carrying components designated "NTR" shall conform to the Impact Testing Requirement, Zone 2.

FILE NAME = u:\dot\15375_jr-ed7\CADD_Structure-all\Frmgdetail.dgn

CHASTAIN & ASSOCIATES LLC CONSULTING ENGINEERS 184-001397	USER NAME = csiefert	DESIGNED - ACB	REVISED -	STATE OF ILLINOIS DEPARTMENT OF TRANSPORTATION	FRAMING DETAILS STRUCTURE NO. 066-0021	F.A.P. RTE. 639	SECTION (123B)BR-1
	PLOT TIME = 7:11:39 AM	CHECKED - JMB	REVISED -			COUNTY MERCER	TOTAL SHEETS 106 / SHEET NO. 52
	PLOT SCALE = 20.0000 ':' / in.	DRAWN - RLK	REVISED -			CONTRACT NO. 68663	
	PLOT DATE = 3/21/2018	CHECKED - JMB	REVISED -		SHEET NO. 30 OF 48 SHEETS	ILLINOIS FED. AID PROJECT	

MODEL: Default
FILE NAME: P:\2023\3098410 - Bridge Painting (FY 2023)\4 CADD - DWG\4.7 TranSheets\0468134\0468134-sht-structural detail 5.dgn

TWM ENGINEERING & GEOSPATIAL SERVICES	TWM, INC. WWW.TWM-INC.COM IL DESIGN FIRM LICENSE NO: 184-001220	USER NAME = dlee	DESIGNED - JCL	REVISED -	STATE OF ILLINOIS DEPARTMENT OF TRANSPORTATION	LOCATION 5 – STRUCTURE INFORMATION SN 066-0021	F.A. RTE. VAR	SECTION D4 BRIDGE PAINTING 2025	COUNTY * / TOTAL SHEETS 52 / SHEET NO. 38
			DRAWN - JCL	REVISED -			* HENDERSON, MCDONOUGH, MERCER, WARREN		CONTRACT NO. 68134
		PLOT SCALE = 10.0000 ' / in.	CHECKED - TBP	REVISED -					ILLINOIS FED. AID PROJECT
		PLOT DATE = 8/6/2024	DATE - JULY 2024	REVISED -		SCALE: N/A SHEET 9 OF 14 SHEETS STA. TO STA.			

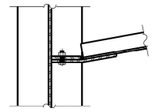

SECTION A-A

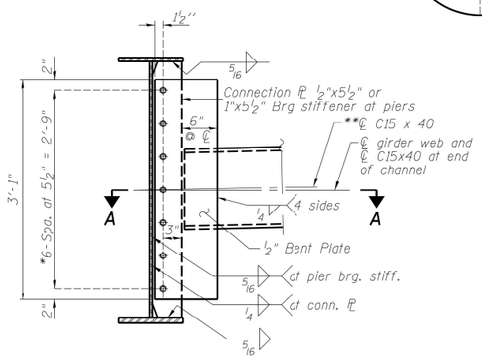

INTERIOR DIAPHRAGM

Note:
Two hardened washers required for each set of oversized holes.
*¾" ϕ HS bolts, 15/16" ϕ holes
**Alternate channels C15x50 are permitted to facilitate material acquisition. Calculated weight of structural steel is based on the lighter section. the alternate, if utilized, shall be provided at no additional cost to the Department.

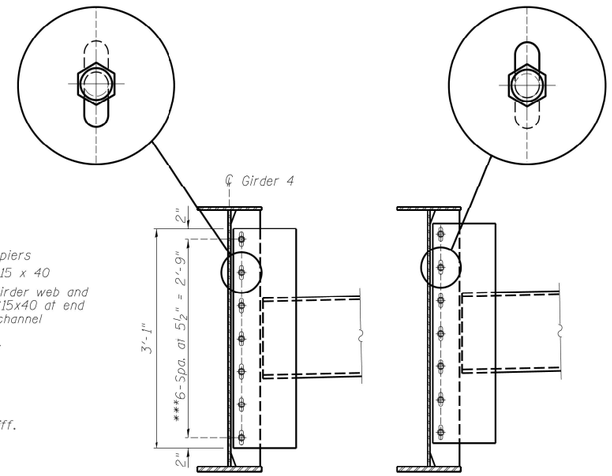

INITIAL BOLT ERECTION POSITION

FINAL ERECTION POSITION AFTER STAGE II DECK POUR

DIAPHRAGM
(North side Beam 4 - 27 locations)

***¾" ϕ HS bolts on the north side of Girder 4 with 13/16"x1⅞" vertical slotted holes in both connection plates, or detailed to allow 2" of differential movement. Bolts in slotted holes shall be finger tightened until the second stage pour is completed. Position slots so bolts move from one end with no concrete load to the opposite end under the deck load. The slotted holes in the connection plates and bearing stiffeners shall be positioned as shown to allow the bolts to move to the final erection position under deck load. The holes shall be positioned to allow maximum bolt displacement without laterally stressing the girders. At each long-slotted hole a 5/16" thick plate washer or continuous bar shall be provided.

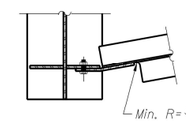

SECTION B-B

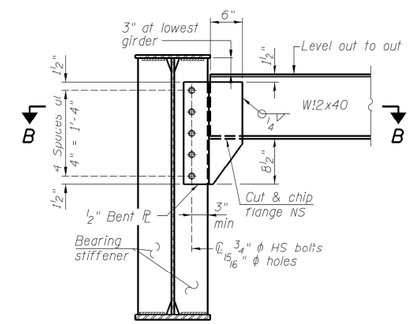

END DIAPHRAGM AT WEST ABUTMENT

Note: Two hardened washers required for each set of oversized holes.

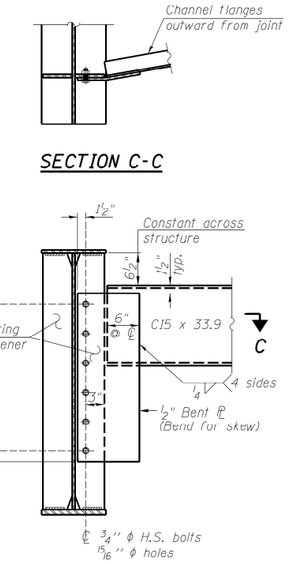

SECTION C-C

END DIAPHRAGM AT EAST ABUTMENT

Note: Two hardened washers required for each set of oversized holes.

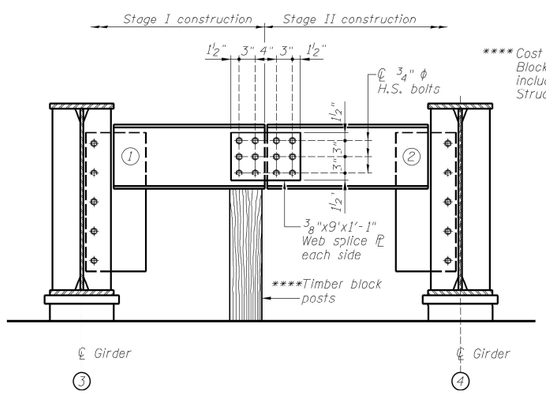

****Cost of Timber Block Posts is included with Structural Steel.

END DIAPHRAGM AT EAST ABUTMENT

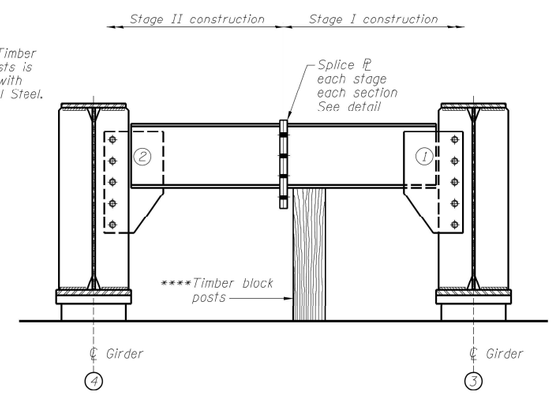

END DIAPHRAGM AT WEST ABUTMENT

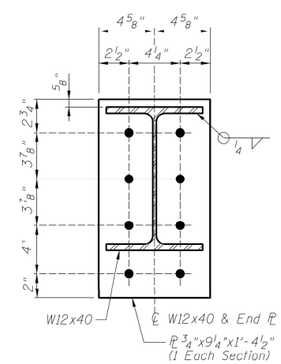

W12x40 SPLICE DETAIL

END DIAPHRAGM STAGE CONSTRUCTION SEQUENCE

1.) Order diaphragm in two sections.
2.) Attach section 1 of diaphragm to girder 3.
3.) Place timber block posts between section 1 of diaphragm and abutment bearing section.
4.) Attach section 2 of diaphragm to both girder 4 and section 1 of diaphragm during stage II construction with splice plates.
5.) Remove timber block posts.

NOTES

All diaphragms shall be installed as steel is erected and secured with erection pins and bolts except as otherwise noted. Individual diaphragms at supports may be temporarily disconnected to install bearing anchor rods.

FILE NAME = I:\1001\5375_IL Rte 17\CADD_Structural\Framing details.dgn

CHASTAIN & ASSOCIATES LLC CONSULTING ENGINEERS 184-001397	USER NAME = jbuenning	DESIGNED - ACB	REVISED -	STATE OF ILLINOIS DEPARTMENT OF TRANSPORTATION	FRAMING DETAILS STRUCTURE NO. 066-0021	F.A.P. RTE. 639	SECTION (123B)BR-1	COUNTY MERCER	TOTAL SHEETS 106	SHEET NO. 53
	PLOT TIME = 10:15:51 AM	CHECKED - JMB	REVISED -					CONTRACT NO. 68663		
	PLOT SCALE = 20.0000 ' / in.	DRAWN - RLK	REVISED -					ILLINOIS FED. AID PROJECT		
	PLOT DATE = 5/10/2018	CHECKED - JMB	REVISED -		SHEET NO. 31 OF 48 SHEETS					

MODEL: Default
FILE NAME: P:\2023\2309340 - Bridge Painting (FY 2025)\4 CADD - DWG\4.7 Tran\Sheets\0466340466834-chi-structural detail 5.dgn

TWM ENGINEERING GEOSPATIAL SERVICES	TWM, INC. WWW.TWM-INC.COM IL DESIGN FIRM LICENSE NO: 184-001220	USER NAME = dlee	DESIGNED - JCL	REVISED -	STATE OF ILLINOIS DEPARTMENT OF TRANSPORTATION	LOCATION 5 – STRUCTURE INFORMATION SN 066-0021	F.A. RTE. VAR	SECTION D4 BRIDGE PAINTING 2025	COUNTY *	TOTAL SHEETS 52	SHEET NO. 39
			DRAWN - JCL	REVISED -			* HENDERSON, MCDONOUGH, MERCER, WARREN		CONTRACT NO. 68J34		
		PLOT SCALE = 10.0000 ' / in.	CHECKED - TBP	REVISED -					ILLINOIS FED. AID PROJECT		
		PLOT DATE = 8/6/2024	DATE - JULY 2024	REVISED -		SCALE: N/A SHEET 10 OF 14 SHEETS STA. TO STA.					

FOR INFORMATION ONLY

LOCATION 5 (IL 17 OVER EDWARDS RIVER)

SN 066–0021

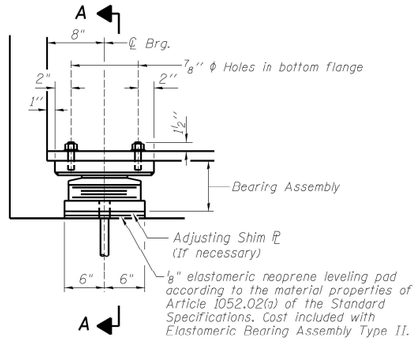

ELEVATION AT ABUT.

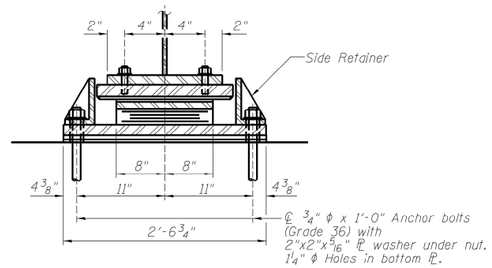

SECTION A-A

TYPE II ELASTOMERIC EXP. BRG.

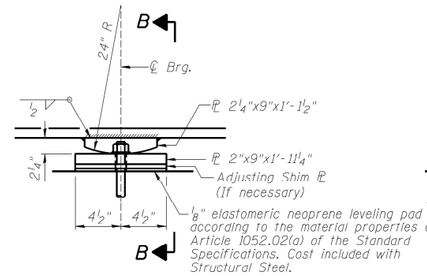

ELEVATION AT PIER

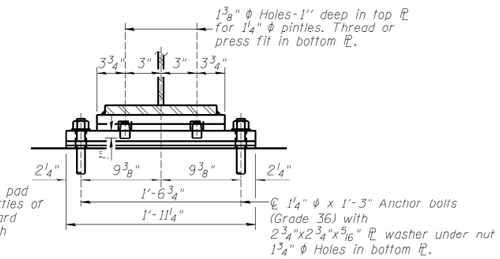

SECTION B-B

FIXED BEARING AT PIER 3

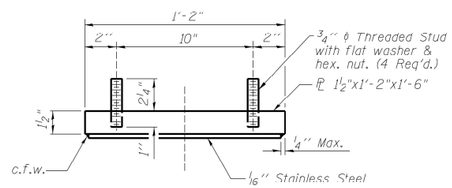

TOP BEARING ASSEMBLY

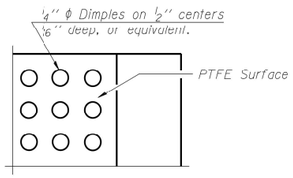

PLAN-PTFE SURFACE

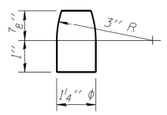

PINTLE

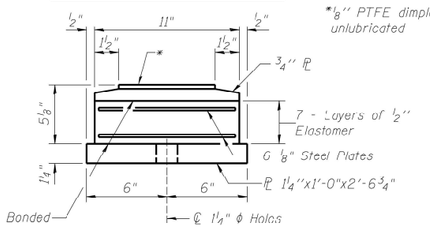

*1/8" PTFE dimpled, unlubricated

BOTTOM BEARING ASSEMBLY

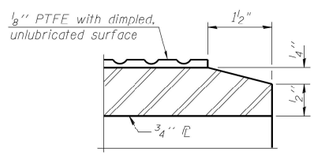

SECTION THRU PTFE

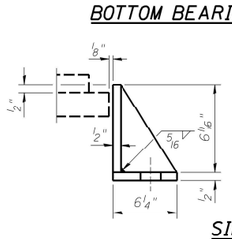

SIDE RETAINER

Equivalent rolled angle with stiffeners will be allowed in lieu of welded plates.

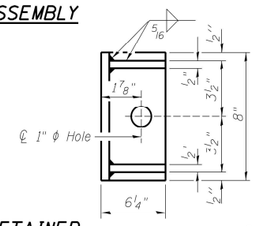

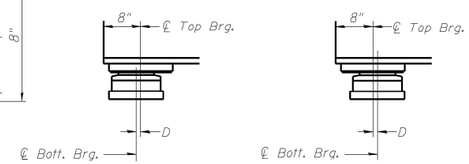

BELOW 50°F. **ABOVE 50°F.**

D=1/8" per each 100' of expansion for every 15° temp. change from the normal temp. of 50°F.

EXPANSION BEARING ORIENTATION

The above diagrams are for informational purposes only to show the amount of expected offset "D" for the current temperature in the field.

Notes:

Anchor bolts shall be ASTM F1554 all-thread (or an Engineer-approved alternate material) of the grade(s) and diameter(s) specified. The corresponding specified grade of AASHTO M314 anchor bolts may be used in lieu of ASTM F1554.

Side retainers and other steel members required for the elastomeric bearing assembly shall be included in the cost of Elastomeric Bearing Assembly, Type II.

The 1/8" PTFE sheet shall be bonded directly to the top steel plate with a two-component, medium viscosity epoxy resin, conforming to the requirements of the Federal Specification MMM-A-134, Type I. The bond agent shall be applied on the full area of the contact surfaces.

Bonding of 1/8" PTFE sheet during vulcanizing process will be permitted provided the process and method of adjusting assembly height is approved by the Engineer.

Beams shall be braced for stability during erection and remain braced until deck is poured and cured.

Anchor bolts and side retainers at all supports shall be installed as each member is erected unless an equivalent temporary means of lateral restraint is used.

All bearing plates, side retainers, anchor bolts, nuts, adjusting shims and washers under the expansion joints shall be galvanized according to AASHTO M111 or M232 as applicable.

Threaded studs in bearing assembly at the abutments shall be galvanized according to AASHTO M298 Class 50.

Two 1/8 in. adjusting shims shall be provided for each bearing in addition to all other plates or shims and placed as shown on bearing details.

Anchor bolts at fixed bearings may be either cast in place or installed in holes drilled after the supported member is in place.

Drilled and set anchor bolts shall be installed according to Article 521.06 of the Standard Specifications.

The structural steel plates and pintles of the fixed bearing assembly shall conform to the requirements of AASHTO M270, Grade 50W.

The structural steel plates of the elastomeric bearing assembly at the abutments shall conform to the requirements of AASHTO M270, Grade 50.

BILL OF MATERIAL

Item	Unit	Total
Elastomeric Bearing Assembly Type II	Each	12
Anchor Bolts, 3/4"	Each	24
Anchor Bolts, 1 1/4"	Each	12

I-2E-2

11 22 2016

FILE NAME = p:\dot\5375_il-rte17\CADD_Structural\bridgedetails.dgn

CHASTAIN & ASSOCIATES LLC CONSULTING ENGINEERS 184-001397	USER NAME = cassefert	DESIGNED - ACB	REVISED -	STATE OF ILLINOIS DEPARTMENT OF TRANSPORTATION	BEARING DETAILS STRUCTURE NO. 066–0021
	PLOT TIME = 7:11:43 AM	CHECKED - JMB	REVISED -		
	PLOT SCALE = 40.0000 ' / in.	DRAWN - RLK	REVISED -		
	PLOT DATE = 3/21/2018	CHECKED - JMB	REVISED -		SHEET NO. 33 OF 48 SHEETS

F.A.P. RTE.	SECTION	COUNTY	TOTAL SHEETS	SHEET NO.
639	(123B)BR-1	MERCER	106	55
		CONTRACT NO. 68663		
		ILLINOIS FED. AID PROJECT		

MODEL: Default
FILE NAME: P:\2023\3098410 - Bridge Painting IFY 2025\4 CADD - DWG\47 TranSheets\D4683410468134-structural detail 5.dgn

TWM ENGINEERING GEOSPATIAL SERVICES	TWM, INC. WWW.TWM-INC.COM IL DESIGN FIRM LICENSE NO: 184-001220	USER NAME = dlee	DESIGNED - JCL	REVISED -	STATE OF ILLINOIS DEPARTMENT OF TRANSPORTATION
			DRAWN - JCL	REVISED -	
		PLOT SCALE = 10.0000 ' / in.	CHECKED - TBP	REVISED -	
		PLOT DATE = 8/6/2024	DATE - JULY 2024	REVISED -	

LOCATION 5 – STRUCTURE INFORMATION
SN 066–0021

SCALE: N/A | SHEET 11 OF 14 SHEETS | STA. TO STA.

F.A. RTE.	SECTION	COUNTY	TOTAL SHEETS	SHEET NO.
VAR	D4 BRIDGE PAINTING 2025	*	52	40
	* HENDERSON, MCDONOUGH, MERCER, WARREN	CONTRACT NO. 68134		
		ILLINOIS FED. AID PROJECT		

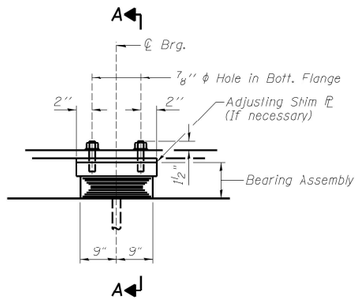

ELEVATION AT PIER

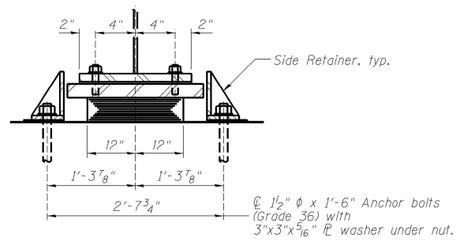

SECTION A-A

TYPE I ELASTOMERIC EXP. BRG. AT PIERS 1, 2 & 4

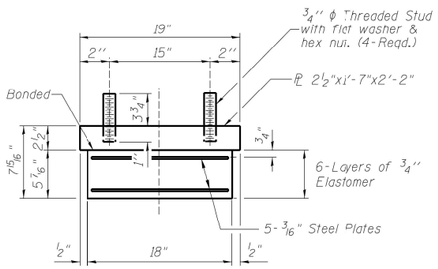

BEARING ASSEMBLY

Note:
Shim plates shall not be placed under Bearing Assembly.

Notes:
Anchor bolts shall be ASTM F1554 all-thread (or an Engineer-approved alternate material) of the grade(s) and diameter(s) specified. The corresponding specified grade of AASHTO M314 anchor bolts may be used in lieu of ASTM F1554.

Side retainers and other steel members required for the elastomeric bearing assembly shall be included in the cost of Elastomeric Bearing Assembly, Type I.

Beams shall be braced for stability during erection and remain braced until deck is poured and cured.

Anchor bolts and side retainers at all supports shall be installed as each member is erected unless an equivalent temporary means of lateral restraint is used.

Two 1/8 in. adjusting shims shall be provided for each bearing in addition to all other plates or shims and placed as shown on bearing details.

The structural steel plates of the elastomeric bearing assembly at the piers shall conform to the requirements of AASHTO M270, Grade 50W.

Drilled and set anchor bolts shall be installed according to Article 521.06 of the Standard Specifications.

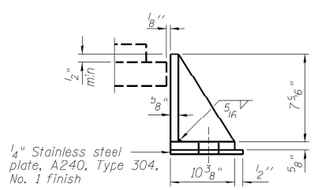

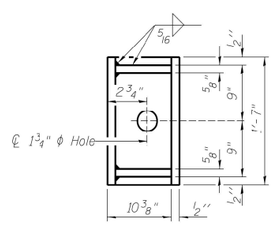

SIDE RETAINER

Equivalent rolled angle with stiffeners will be allowed in lieu of welded plates.

BILL OF MATERIAL

Item	Unit	Total
Elastomeric Bearing Assembly Type I	Each	18
Anchor Bolts, 1 1/2"	Each	36

I-2E-1 11-22-2016

FILE NAME = s:\idot\5375_jrtel7\C420_Structural\bergdetails.dgn

CHASTAIN & ASSOCIATES LLC CONSULTING ENGINEERS 184-001397	USER NAME = csiefert	DESIGNED - ACB	REVISED -
	PLOT TIME = 7:11:44 AM	CHECKED - JMB	REVISED -
	PLOT SCALE = 40.0000 ' / in.	DRAWN - RLK	REVISED -
	PLOT DATE = 3/21/2018	CHECKED - JMB	REVISED -

STATE OF ILLINOIS
DEPARTMENT OF TRANSPORTATION

BEARING DETAILS
STRUCTURE NO. 066–0021
SHEET NO. 34 OF 48 SHEETS

F.A.P. RTE.	SECTION	COUNTY	TOTAL SHEETS	SHEET NO.
639	(123B)BR-1	MERCER	106	56
		CONTRACT NO. 68663		
		ILLINOIS FED. AID PROJECT		

MODEL: Default
FILE NAME: P:\2023\3598410 - Bridge Painting (FY 2025)\4 CADD - DWG\4.7 Trans\Sheets\D468J34\D468J34-sht-structural detail 5.dgn

TWM ENGINEERING GEOSPATIAL SERVICES TWM, INC. www.TWM-INC.COM IL DESIGN FIRM LICENSE NO: 184-001220	USER NAME = dlee	DESIGNED - JCL	REVISED -
		DRAWN - JCL	REVISED -
	PLOT SCALE = 10.0000 ' / in.	CHECKED - TBP	REVISED -
	PLOT DATE = 8/6/2024	DATE - JULY 2024	REVISED -

STATE OF ILLINOIS
DEPARTMENT OF TRANSPORTATION

LOCATION 5 – STRUCTURE INFORMATION
SN 066–0021

SCALE: N/A | SHEET 12 OF 14 SHEETS | STA. TO STA.

F.A. RTE.	SECTION	COUNTY	TOTAL SHEETS	SHEET NO.
VAR	D4 BRIDGE PAINTING 2025	*	52	41
	* HENDERSON, MCDONOUGH, MERCER, WARREN	CONTRACT NO. 68J34		
		ILLINOIS FED. AID PROJECT		

FOR INFORMATION ONLY

LOCATION 5 (IL 17 OVER EDWARDS RIVER)

SN 066–0021

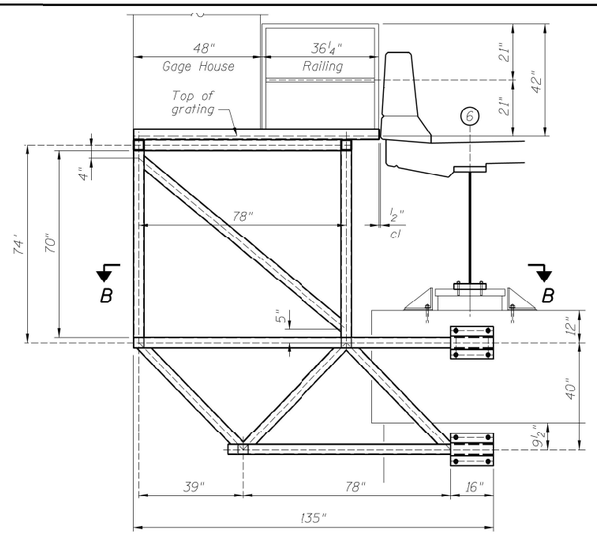

SECTION A-A

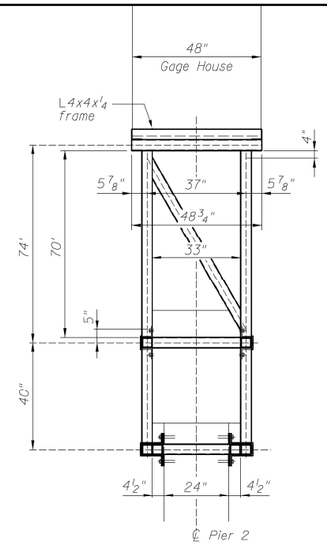

END VIEW

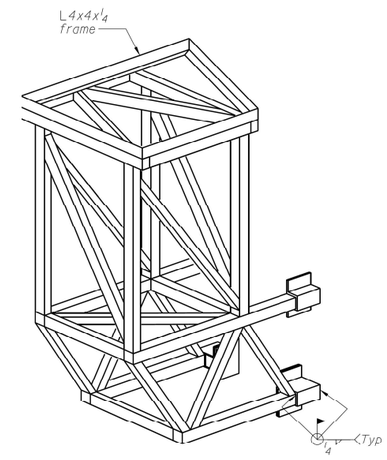

ISOMETRIC VIEW

(Showing support)

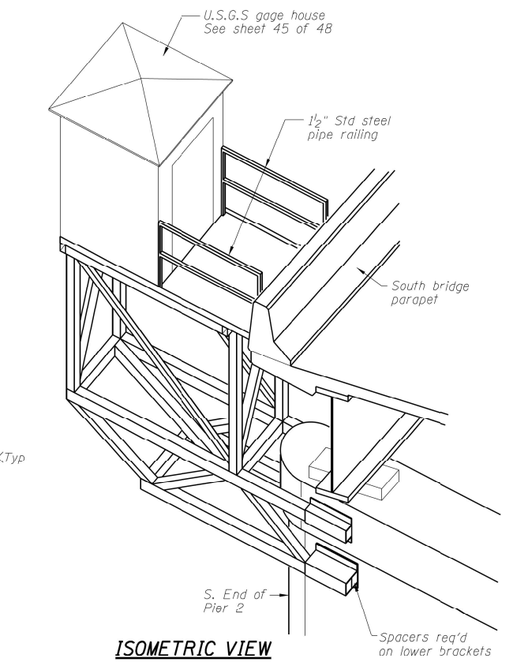

ISOMETRIC VIEW

(Showing gage house and railing)

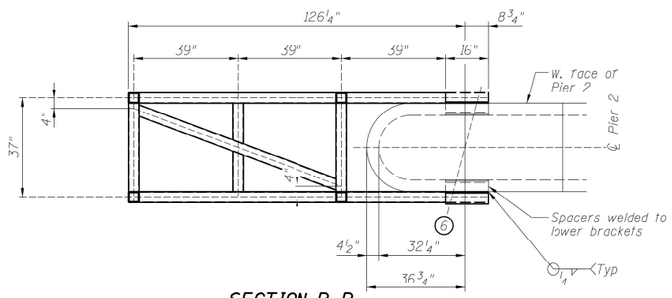

SECTION B-B

NOTES:

Bolts, nuts and washers shall be galvanized in accordance with Article 706.08 of the Standard Specifications.

All members to be HSS 4x4x¼ unless otherwise noted.

All welds to be ¼" fillet or groove welds.

Cap all exposed ends of structural tubing with ¼" plates.

Bolt to sides of pier with ¾" ϕ galv. A307 bolts, capsule or adhesive cartridge type anchors.

Grating shall be designed for 100 psf live load.

HSS spacers on lower bracket shall be fully welded to lower bracket and truss chord.

BILL OF MATERIAL

Item	Unit	Total
U.S.G.S. Gage Equipment Cabinet, Special	Each	1

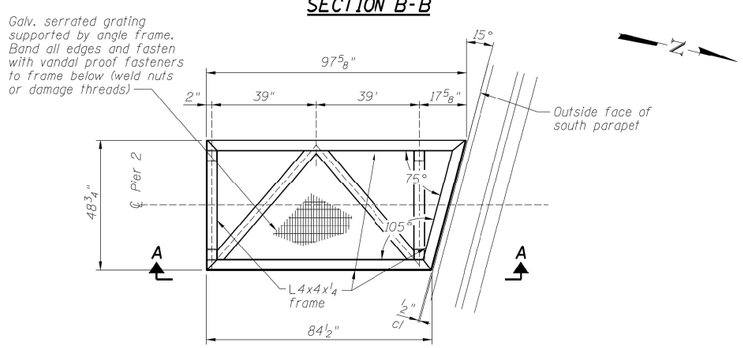

TOP PLAN

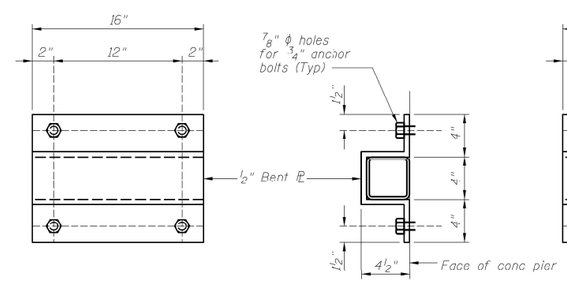

TOP VIEW

SIDE VIEW

UPPER BRACKET DETAIL

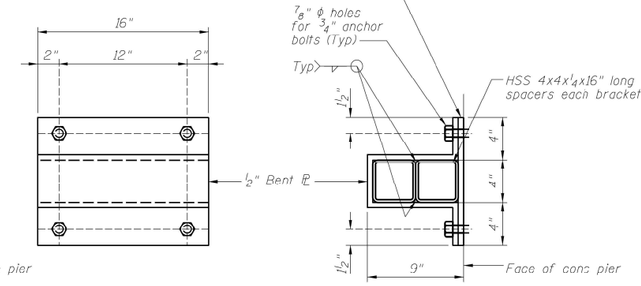

TOP VIEW

SIDE VIEW

LOWER BRACKET DETAIL

FILE NAME = s:\Jobs\5375_Jl-Rt17\CADD_Structure-B1\gagehouse.dgn

CHASTAIN & ASSOCIATES LLC CONSULTING ENGINEERS 184-001397	USER NAME = csiefert	DESIGNED - ACB	REVISED -	STATE OF ILLINOIS DEPARTMENT OF TRANSPORTATION	U.S.G.S GAGE HOUSE STRUCTURE NO. 066–0021	F.A.P. RTE. 639	SECTION (123B)BR-1	COUNTY MERCER	TOTAL SHEETS 106	SHEET NO. 66
	PLOT TIME = 7:11:56 AM	CHECKED - JMB	REVISED -					CONTRACT NO. 68663		
	PLOT SCALE = 4.0000 ' / in.	DRAWN - RLK	REVISED -		SHEET NO. 44 OF 48 SHEETS			ILLINOIS FED. AID PROJECT		
	PLOT DATE = 3/21/2018	CHECKED - JMB	REVISED -							

MODEL: Default
FILE NAME: P:\2023\3098410 - Bridge Painting IPY 2023\4 CADD - DWG\4.7 Trans\Sheets\D468J34\D468J34-JRt-structural detail 5.dgn

TWM ENGINEERING GEOSPATIAL SERVICES	TWM, INC. www.twm-inc.com IL DESIGN FIRM LICENSE NO: 184-001220	USER NAME = dlee	DESIGNED - JCL	REVISED -	STATE OF ILLINOIS DEPARTMENT OF TRANSPORTATION	LOCATION 5 – STRUCTURE INFORMATION SN 066–0021	F.A. RTE. VAR	SECTION D4 BRIDGE PAINTING 2025	COUNTY *	TOTAL SHEETS 52	SHEET NO. 42
			DRAWN - JCL	REVISED -			* HENDERSON, MCDONOUGH, MERCER, WARREN		CONTRACT NO. 68J34		
		PLOT SCALE = 10.0000 ' / in.	CHECKED - TBP	REVISED -							
		PLOT DATE = 8/6/2024	DATE - JULY 2024	REVISED -		SCALE: N/A SHEET 13 OF 14 SHEETS STA. TO STA.		ILLINOIS FED. AID PROJECT			

FOR INFORMATION ONLY
LOCATION 5 (IL 17 OVER EDWARDS RIVER)
SN 066–0021

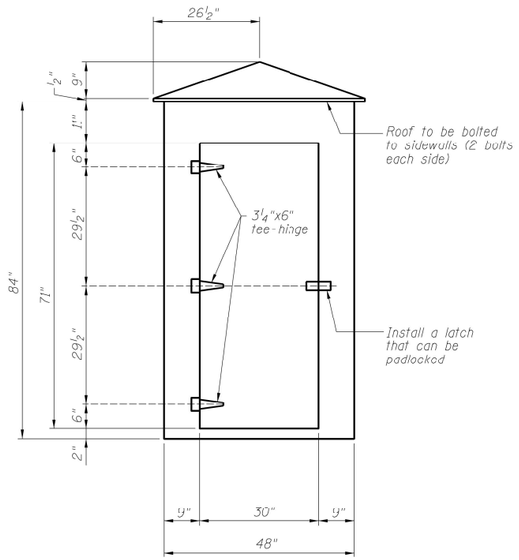

FRONT VIEW

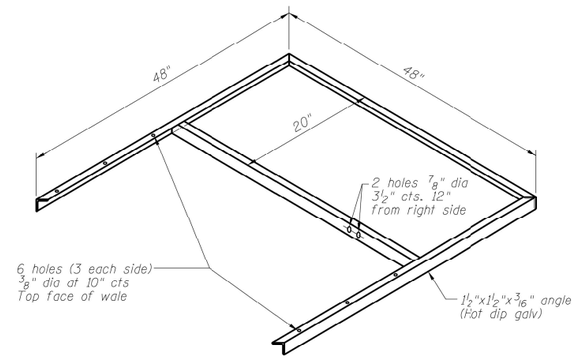

HALF WALE, 48x48 GAGE HOUSE

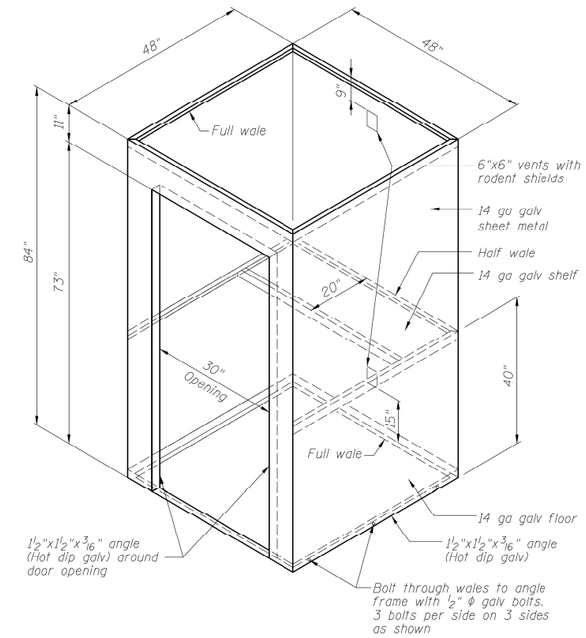

ISOMETRIC VIEW - GAGE HOUSE

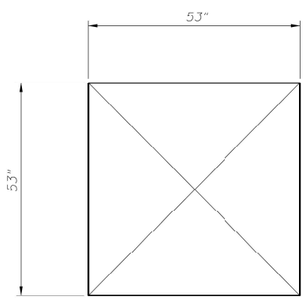

TOP VIEW - ROOF

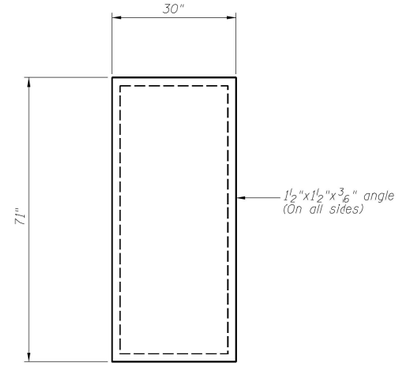

DOOR

NOTES:

Bolts, nuts and washers shall be galvanized in accordance with Article 706.08 of the Standard Specifications.

Gage house will be paid for as U.S.G.S. Gage Equipment Cabinet, Special.

Siding shall be attached to the wales with sheet metal fasteners and rubber washers.

FILE NAME = H:\dot15375_lr-ia17\CADD_Structure-a1\gagehouse.dgn

CHASTAIN & ASSOCIATES LLC CONSULTING ENGINEERS 184-001397	USER NAME = csiefert	DESIGNED - ACB	REVISED -	STATE OF ILLINOIS DEPARTMENT OF TRANSPORTATION	U.S.G.S GAGE HOUSE STRUCTURE NO. 066–0021	F.A.P. RTE. 639	SECTION (123B)BR-1	COUNTY MERCER
	PLOT TIME = 7:11:57 AM	CHECKED - JMB	REVISED -			TOTAL SHEETS 106	SHEET NO. 67	CONTRACT NO. 68663
	PLOT SCALE = 4.0000 ' / in.	DRAWN - RLK	REVISED -					
	PLOT DATE = 3/21/2018	CHECKED - JMB	REVISED -		SHEET NO. 45 OF 48 SHEETS			ILLINOIS FED. AID PROJECT

MODEL: Default
FILE NAME: P:\D23\23098AD - Bridge Painting (FY 2025)\A CADD - DWG\4.7 Tran\Sheets\0468134\0468134-sht-structural detail 5.dgn

TWM ENGINEERING GEOSPATIAL SERVICES	TWM, INC. WWW.TWM-INC.COM IL DESIGN FIRM LICENSE NO: 184-001220	USER NAME = dlee	DESIGNED - JCL	REVISED -	STATE OF ILLINOIS DEPARTMENT OF TRANSPORTATION	LOCATION 5 – STRUCTURE INFORMATION SN 066–0021	F.A. RTE. VAR	SECTION D4 BRIDGE PAINTING 2025	COUNTY *
			DRAWN - JCL	REVISED -					
		PLOT SCALE = 10.0000 ' / in.	CHECKED - TBP	REVISED -			* HENDERSON, MCDONOUGH, MERCER, WARREN		
		PLOT DATE = 8/6/2024	DATE - JULY 2024	REVISED -		SCALE: N/A SHEET 14 OF 14 SHEETS STA. TO STA.			

TOTAL SHEETS	SHEET NO.
52	43

CONTRACT NO. 68J34
ILLINOIS FED. AID PROJECT

FOR INFORMATION ONLY
LOCATION 6 (IL 94 & 135 OVER HENDERSON CREEK)
SN 094–0016

Bench Mark
T.B.M Chisled "0" on SE wingwall @ south abut elev. 593.90

"200 Railroad spike in west side of P.P. Sta. 103+40, Lt. 212' elev. 589.46

DESIGN STRESSES

FIELD UNITS	PRECAST UNITS
f'_c = 3500 psi	f'_c = 4500 psi
f_v = 60,000 psi (Reinf)	f_c = 1800 psi
f_s = 50,000 psi (Struct Steel)	f_s = 20,000 psi
n = 9	n = 8

STA 100+54.48
BUILT 198_ BY
STATE OF ILLINOIS
F.A. RT. 546 SEC. (1046)BR
F.A. PROJ. BHF-546(2)
LOADING HS 20
STR. NO. 094-0016

NAME PLATE
(See Standard 2113)

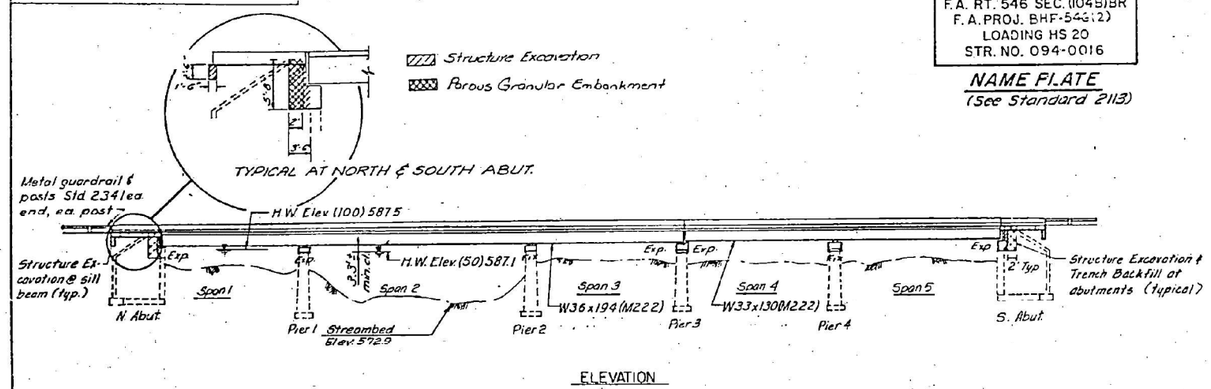

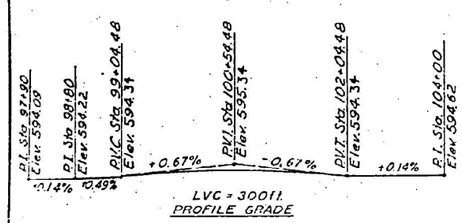

WATERWAY INFORMATION

Drainage Area 151 sq mi. Low Grade Elev. 594.3 @ Sta 85+00								
Flood	Freq Yr	Q C.F.S.	Opening Sq Ft. Exist	Opening Sq Ft. Prop	Nat. H.W.E.	Head - Ft. Exist	Head - Ft. Prop	Headwater El. Exist.	Headwater El. Prop.
Design	50	8100	1706	1706	587.1	0.61	0.61	587.71	587.71
Base	100	9210	1821	1821	587.5	0.73	0.73	588.23	588.23
Overtopping									
Max. Calc.	500	11,726	2026	2026	588.2	0.98	0.98	589.18	589.18

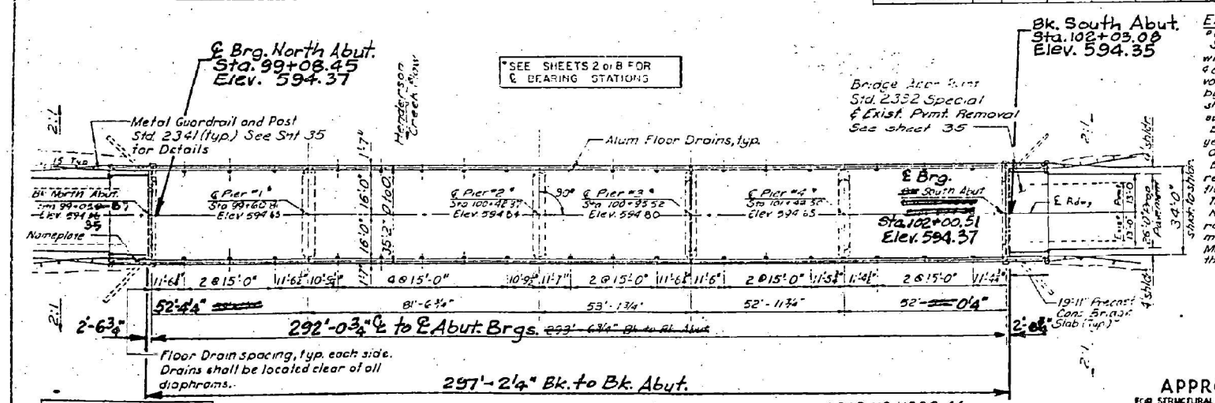

EXISTING STRUCTURE
#094-0016
Sta. 100+54.48, a 5 span structure with an 81'-6" pony truss main span and 4 cast-in-place concrete girder spans varying from 51'-6" to 53'-3" supported by closed concrete abutments and conc. shaft piers. Abutments and piers are supported by timber piles.
Built as SBI Rte. 94 Section 104B in year 1930. Bk to Bk. abuts = 294'-0" O. to O. water table = 24'-0".
Existing superstructure shall be removed and replaced with new wide flange beams and reinf. conc. deck. Traffic shall be detoured.
No salvage, except existing Type 7 rail & terminal sections shall be removed and delivered to the District Maintenance Engineer as directed by the Engineer.

LOADING HS 20-44
Design Specifications: 1977 AASHTO 1978, 1979 and 1980 Interims. Includes an allowance of 25 lbs/sq. ft. for future wearing surface.

DESIGNED	WRS
CHECKED	PGD
DRAWN	DGH
CHECKED	WRS

APPROVED
FOR STRUCTURAL ADEQUACY ONLY
James T. Rayburn
Engr. of Bridges & Structures
2-27-81
DATE

STATE OF ILLINOIS
WOODROW C. CHENAULT, JR.
3567
REGISTERED STRUCTURAL ENGINEER

Woodrow C. Chenault, Jr.
WOODROW C. CHENAULT JR
ILLINOIS REGISTERED STRUCTURAL ENGINEER NO. 3567

SHEETS NO.	SHEETS TO
1	12

GENERAL NOTES

1. CALCULATED WEIGHT OF STRUCTURAL STEEL = 222,190 LBS
2. SEE PROPOSAL FOR BORING DATA
3. FASTENERS SHALL BE HIGH STRENGTH BOLTS AASHTO M164, TYPE 3, BOLTS 3/4", OPEN HOLES 13/16", UNLESS OTHERWISE NOTED.
4. ALL STRUCTURAL STEEL SHALL BE AASHTO M 222, AND SHALL BE UNPAINTED EXCEPT AS NOTED IN NOTE 5.
5. ALL STRUCTURAL STEEL FOR A DISTANCE OF THREE TIMES THE DEPTH OF THE BEAMS OR GIRDERS, BUT NOT EXCEEDING 10 FEET, EACH WAY FROM DECK JOINTS SHALL BE CLEANED AND GIVEN ONE COAT OF THE ZINC-SILICATE PRIMER AND A DARK MAROON VINYL FINISH COAT. BOTH COATS TO BE APPLIED IN THE SHOP WITH SPOT PAINTING ONLY IN THE FIELD.
6. FIELD WELDING OF CONSTRUCTION ACCESSORIES WILL NOT BE PERMITTED TO THE BOTTOM FLANGE OF BEAMS OR GIRDERS NOR TO THE TOP FLANGE FOR A DISTANCE EQUAL TO ONE FOURTH THE SPAN LENGTH EACH WAY FROM THE PIER SUPPORTS. FIELD WELDING IN OTHER AREAS WILL BE PERMITTED ONLY WHEN APPROVED BY THE ENGINEER.
7. ANCHOR BOLTS SHALL BE SET BEFORE BOLTING DIAPHRAGMS OVER SUPPORTS.
8. PLAN DIMENSIONS AND DETAILS RELATIVE TO EXISTING STRUCTURE HAVE BEEN TAKEN FROM EXISTING PLANS AND ARE SUBJECT TO NOMINAL CONSTRUCTION VARIATIONS. IT SHALL BE THE CONTRACTOR'S RESPONSIBILITY TO VERIFY SUCH DIMENSIONS AND DETAILS IN THE FIELD AND MAKE NECESSARY APPROVED ADJUSTMENTS PRIOR TO CONSTRUCTION OR ORDERING OF MATERIALS. SUCH VARIATIONS SHALL NOT BE CAUSE FOR ADDITIONAL COMPENSATION FOR A CHANGE IN THE SCOPE OF THE WORK; HOWEVER, THE CONTRACTOR WILL BE PAID FOR THE QUANTITY ACTUALLY FURNISHED AT THE UNIT PRICE BID FOR THE WORK.
9. EXPANSION BOLTS SHALL CONSIST OF APPROVED EXPANSION ANCHORS, PROVIDING MINIMUM CERTIFIED PROOF LOAD = 4060 LBS., AND 3/4" Ø x 12" HOOKED BOLTS.
10. BEARING SEAT SURFACES SHALL BE CONSTRUCTED OR ADJUSTED TO THE DESIGNATED ELEVATIONS WITHIN A TOLERANCE OF 1/8 INCH. ADJUSTMENT SHALL BE MADE EITHER BY GRINDING THE SURFACE OR BY SHIMMING THE BEARING. TWO 1/8" ADJUSTING SHIMS, OF THE DIMENSIONS OF THE BOTTOM BEARING PLATE, SHALL BE PROVIDED FOR EACH BEARING IN ADDITION TO ALL OTHER PLATES OR SHIMS (SHIMS SHALL BE M222)
11. THE MAIN LOAD CARRYING MEMBER COMPONENTS SUBJECT TO TENSILE STRESS SHALL CONFORM TO THE SUPPLEMENTAL REQUIREMENTS FOR NOTCH TOUGHNESS ZONE 2. THESE COMPONENTS ARE THE SPLICE PLATE MATERIAL AND THE STEEL WIDE FLANGE BEAMS.
12. REINFORCEMENT BARS SHALL CONFORM TO THE REQUIREMENTS OF AASHTO M-31 OR M-53 GRADE 60, EXCEPT FOR PRECAST CONCRETE BRIDGE SLAB WHERE GRADE 40 MAY BE USED.

As Revised
SL 5-28-85

TOTAL STRUCTURE BILL OF MATERIALS

Item	Unit	Quantities Super-structure	Quantities Sub-structure	Quantities Total
Removal of Existing Superstructures	Each	1		1
Concrete Removal	Cu Yd	715		715
Expansion Bolts 3/4" Ø	Each	116		116
Structure Excavation	Cu Yd	51		51
Floor Drains	Each	32		32
Protective Coat	Sq Yd		1315	1315
Class X Concrete	Cu Yd	891	3532	4423
Precast Concrete Bridge Slab	Sq Ft		594	594
Structural Steel	Lump Sum	1		1
Stud Shear Connectors	Each		2124	2124
Reinforcement Bars	Pound	9176	190	9366
Reinforcement Bars (Epoxy Coated)	Pound		87490	87490
Name Plates	Each	1		1
Permanent Survey Marker, Type 1	Each		1	1
Neoprene Expansion Joint, 2"	Lin Ft		102	102
Porous Granular Embankment	Cu Yd		29	29

GENERAL PLAN & ELEVATION
F.A.P. ROUTE 546 OVER
HENDERSON CREEK

SECTION (1046) BR
WARREN COUNTY
STA. 100+54.48

Prepared by: DAILY & ASSOCIATES ENGINEERS INC. CHAMPAIGN, PEORIA ILLINOIS

MODEL: Default
FILE NAME: P:\2023\3098410 - Bridge Painting (FY 2023)\4 CADD - DWG\4.7 Trans\Sheets\0468134\0468134-structural detail 6.dgn

TWM ENGINEERING GEOSPATIAL SERVICES
TWM, INC.
WWW.TWM-INC.COM
IL DESIGN FIRM LICENSE NO: 184-001220

USER NAME = dlee	DESIGNED - JCL	REVISED -
	DRAWN - JCL	REVISED -
PLOT SCALE = 10.0000 ' / in.	CHECKED - TBP	REVISED -
PLOT DATE = 8/6/2024	DATE - JULY 2024	REVISED -

STATE OF ILLINOIS
DEPARTMENT OF TRANSPORTATION

LOCATION 6 – STRUCTURE INFORMATION
SN 094–0016

SCALE: N/A | SHEET 1 OF 9 SHEETS | STA. | TO STA.

F.A. RTE.	SECTION	COUNTY	TOTAL SHEETS	SHEET NO.
VAR	D4 BRIDGE PAINTING 2025	*	52	44
	* HENDERSON, MCDONOUGH, MERCER, WARREN	CONTRACT NO. 68J34		
	ILLINOIS	FED. AID PROJECT		

FOR INFORMATION ONLY
LOCATION 6 (IL 94 & 135 OVER HENDERSON CREEK)
SN 094–0016

STATE OF ILLINOIS
DEPARTMENT OF TRANSPORTATION

ROUTE NO.	SECTION	COUNTY	TOTAL SHEETS	SHEET NO.
F.A. 546	(104B) BR	WARREN	50	41A

SHEET NO. 3A
SHEETS 12

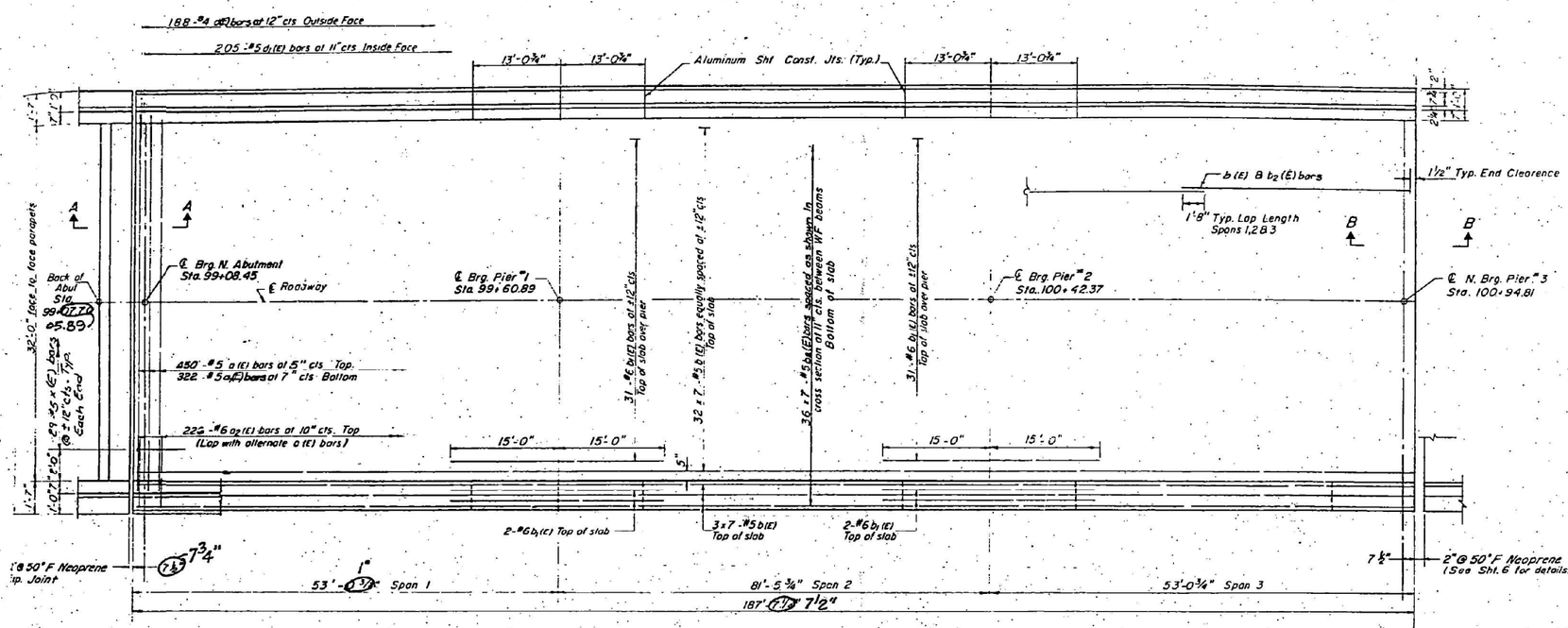

PLAN

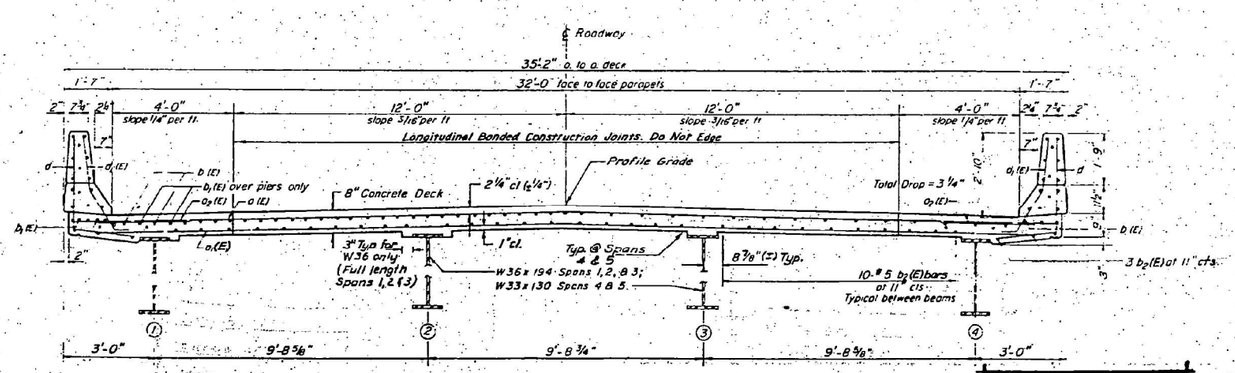

CROSS SECTION
(Spans 1 Thru 5)

NOTES:
See sheet #5 for superstructure details and Bill of Material
Reinforcement bars designated (E) shall be epoxy coated
Bars indicated thus 20 x 3-#5 etc. indicates 20 lines of bars with 3 lengths per line

DESIGNED	WRS
CHECKED	WCC
DRAWN	DEH
CHECKED	WCC

S-1-0 8-30-56

Prepared by: DAILY & ASSOCIATES ENGINEERS INC. CHAMPAIGN PEORIA ILLINOIS

As Revised
SL 5-28-85

SUPERSTRUCTURE — DECK
SPANS 1,2 & 3
F.A.P. ROUTE 546 OVER
HENDERSON CREEK

SECTION (104B) BR.
WARREN COUNTY
STA. 100+54.48

D/A JOB NO. 5583.7

MODEL: Default
FILE NAME: P:\2023\3098410 - Bridge Painting IFY 2025\4 CADD - DWG\4.7 Trans\Sheets\D4683404683404ht-structural detail 6.dgn

TWM ENGINEERING GEOSPATIAL SERVICES	TWM, INC. WWW.TWM-INC.COM IL DESIGN FIRM LICENSE NO: 184-001220	USER NAME = dlee	DESIGNED - JCL	REVISED -
			DRAWN - JCL	REVISED -
		PLOT SCALE = 10.0000 ' / in.	CHECKED - TBP	REVISED -
		PLOT DATE = 8/6/2024	DATE - JULY 2024	REVISED -

STATE OF ILLINOIS
DEPARTMENT OF TRANSPORTATION

LOCATION 6 – STRUCTURE INFORMATION
SN 094–0016

SCALE: N/A | SHEET 2 OF 9 SHEETS | STA. | TO STA.

F.A. RTE.	SECTION	COUNTY	TOTAL SHEETS	SHEET NO.
VAR	D4 BRIDGE PAINTING 2025	*	52	45
* HENDERSON, MCDONOUGH, MERCER, WARREN		CONTRACT NO. 68J34		
		ILLINOIS	FED. AID PROJECT	

FOR INFORMATION ONLY

LOCATION 6 (IL 94 & 135 OVER HENDERSON CREEK)

SN 094-0016

STATE OF ILLINOIS
DEPARTMENT OF TRANSPORTATION

5	6	(104B) BR	WARREN	50	42A

SHEET NO 44
SHEETS 12

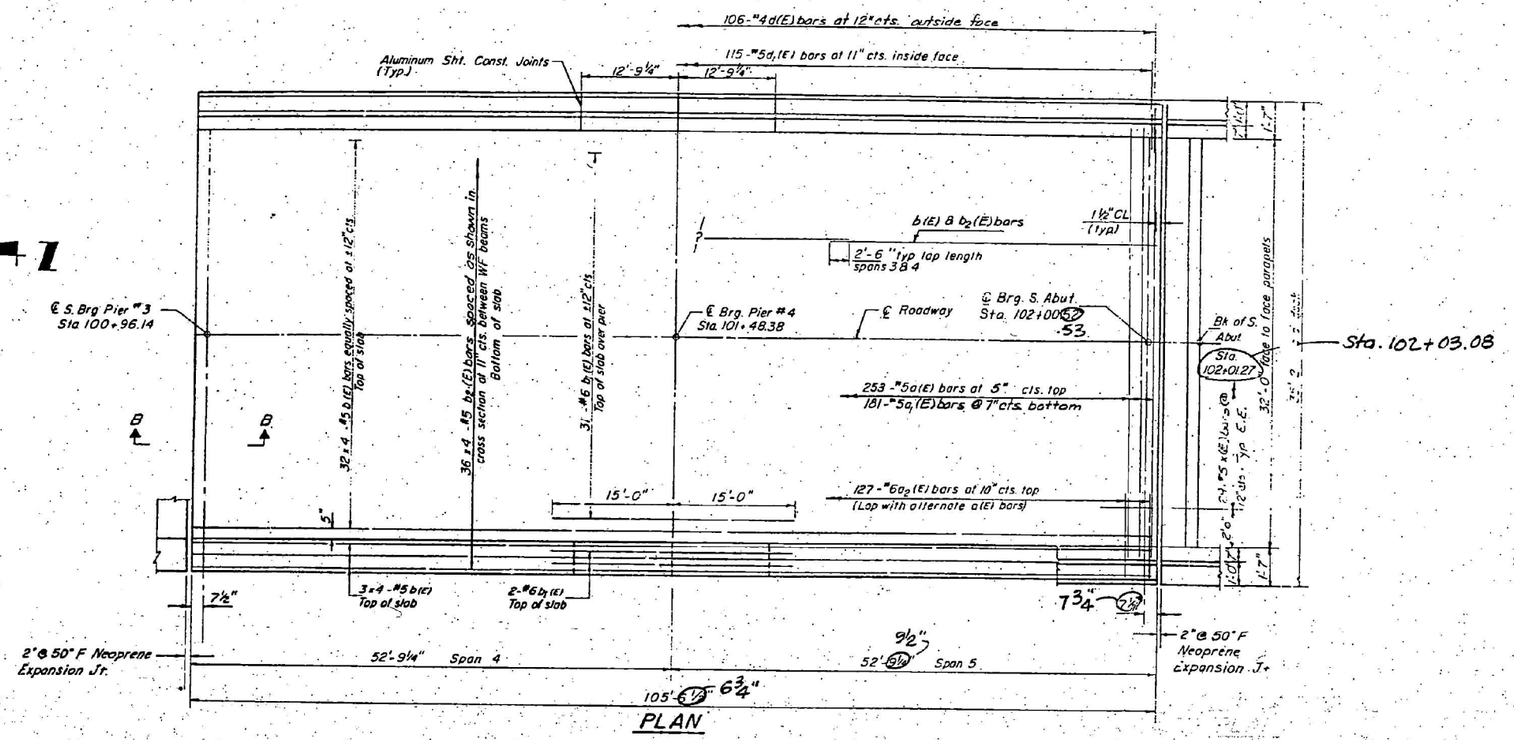

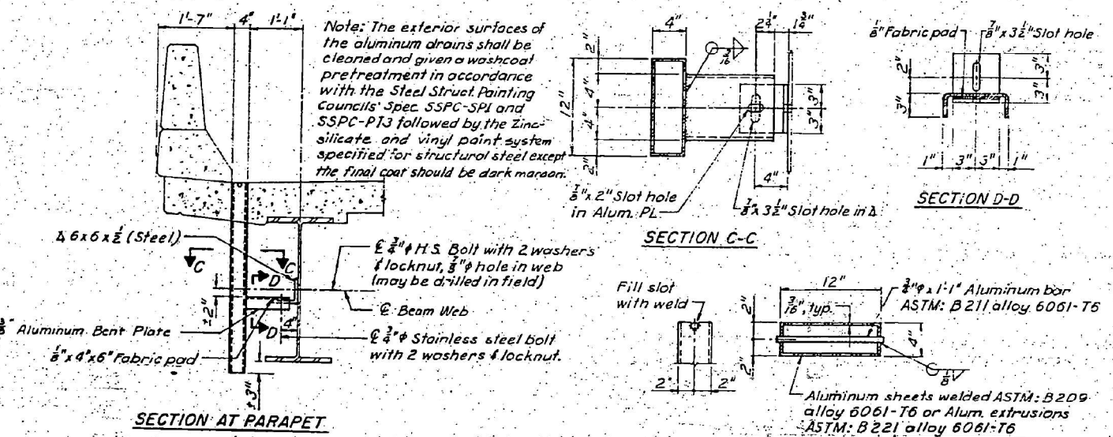

NOTES
See sheet #5 for Bill of Material

Reinforcement bars designated (E) shall be epoxy coated

Bars indicated thus 20 x 3-#5 etc. indicates 20 lines of bars, with 3 lengths per line

FLOOR DRAIN DETAILS
(SEE GENERAL PLAN SHEET FOR SPACING)

As Revised
SL 5-28-85

Prepared by DAILY & ASSOCIATES ENGINEERS INC.
CHAMPAIGN PEORIA ILLINOIS

SUPERSTRUCTURE-DECK
SPANS 4 & 5
F.A.P. ROUTE 546 OVER
HENDERSON CREEK

SECTION (104B) BR
WARREN COUNTY
STA. 100+54.48

D/A JOB NO 1589 76

MODEL: Default
FILE NAME: P:\2023\23098AID - Bridge Painting (FY 2023)\4 CADD - DWG\4.7 Tran\Sheets\0468134\0468134-sht-structural detail 6.dgn

TWM ENGINEERING GEOSPATIAL SERVICES	TWM, INC. WWW.TWM-INC.COM	USER NAME = dlee	DESIGNED - JCL	REVISED -
	IL DESIGN FIRM LICENSE NO: 184-001220		DRAWN - JCL	REVISED -
		PLOT SCALE = 10.0000 ' / in.	CHECKED - TBP	REVISED -
		PLOT DATE = 8/6/2024	DATE - JULY 2024	REVISED -

STATE OF ILLINOIS
DEPARTMENT OF TRANSPORTATION

LOCATION 6 – STRUCTURE INFORMATION
SN 094-0016

SCALE: N/A | SHEET 3 OF 9 SHEETS | STA. TO STA.

F.A. RTE.	SECTION	COUNTY	TOTAL SHEETS	SHEET NO.
VAR	D4 BRIDGE PAINTING 2025	*	52	46
* HENDERSON, MCDONOUGH, MERCER, WARREN		CONTRACT NO. 68J34		
		ILLINOIS FED. AID PROJECT		

STATE OF ILLINOIS
DEPARTMENT OF TRANSPORTATION

STATE FAP NO.	SECTION	COUNTY	TOTAL SHEETS	SHEET NO.
546	(104)BR	WARREN	50	46

SHEET NO. 8
SHEETS 12

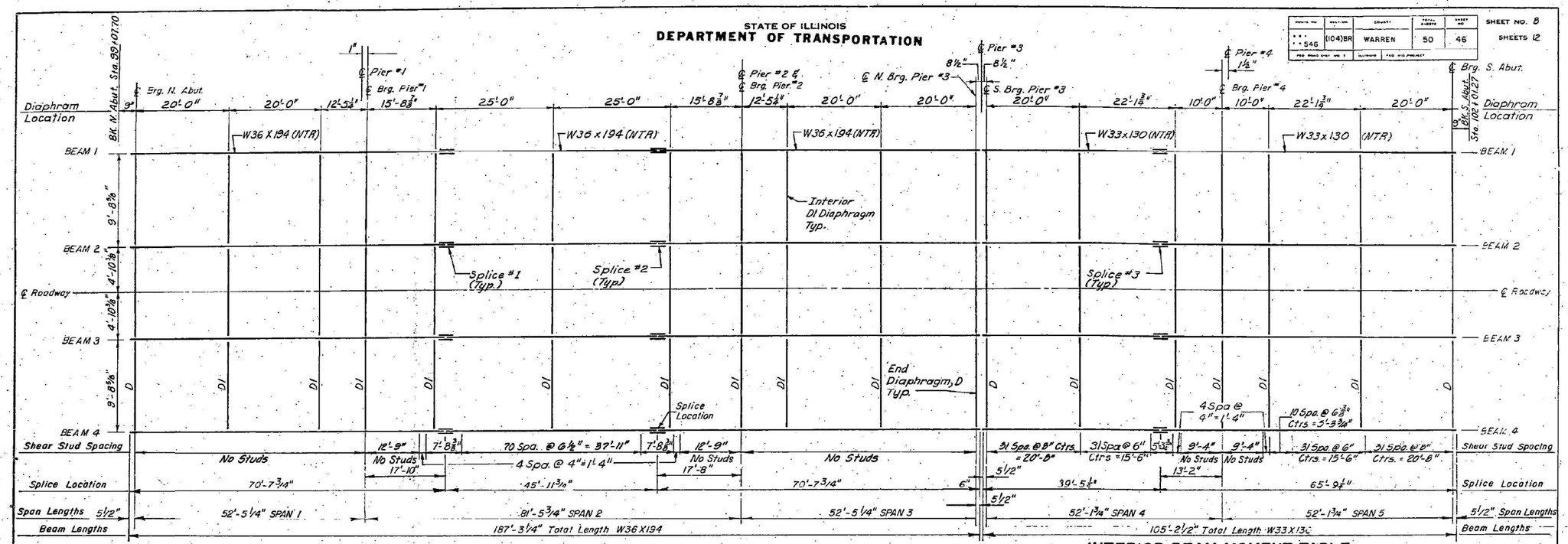

NOTE:
All beams and their associated splice plates shall meet the notch toughness requirements Zone 2. These members are designated NTR.

FRAMING PLAN (See sht. 1 for floor drain locations.)

Flange Splice Plate 1 1/8" x 12" x 84 1/4" W36 (NTR)
Flange Splice Plate 13/16" x 11 1/2" x 54 1/4" W33 (NTR)

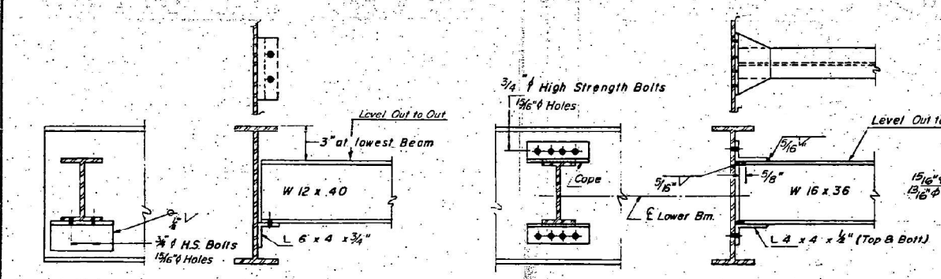

END DIAPHRAGM D
(12 Required)

INTERIOR DIAPHRAGM DI
(42 Required)

Note: Two hardened washers shall be required over all 13/16" holes for diaphragm. All bolts shall be M164, Type 3.

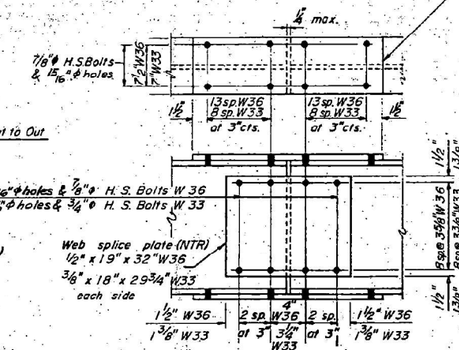

SPLICE

Splices #1 & #2 are @ W36, and splice #3 is @ W33

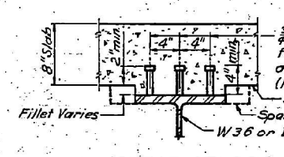

SHEAR STUDS

INTERIOR BEAM MOMENT TABLE

General	W36x194, Compact			W33x130, Compact	
	0.4 Sp. 1 or 3	Pier 1 or 2	0.5 Sp. 2	0.4 Sp. 4 or 5	Pier 4
I_s (in.⁴)	12,100	12,100	12,100	6,710	6,710
I_c (in.⁴)	—	—	31,441	19,325	—
S_s (in.³)	664	664	664	406	—
S_c - bottom (in.³)	—	—	958	624	—
Z_s (in.³)	767	—	767	—	467
DL (Non-Compost.) (K/ft.)	1.13	1.18	1.18	1.12	1.12
M_{DL} (Non-Compost.) (ft.-K)	162	572	401	213	380
DL (Compst.) (K/ft.)	0.44	0.44	0.44	0.44	0.44
M_{DL} (Compst.) (ft.-K)	74	179	186	102	104
M'_{LL} (ft-K)	414	407	769	506	242
M'_{IMP} (ft-K)	133	106	185	142	68
MAX. DESIGN LOAD					
Factored Load Moment $=1.3[D+\frac{5}{3}(L+I)]$ (ft.-K)	1628	2097	2830	1814	1301
M_u Capacity (Non-Composite) (ft.-K)	3196	2767 (Unbraced)	—		1946
M_u Capacity (Compst.) (ft.-K)	—	—	5598	3565	—
OVERLOAD					
f_s Overload = $f_{s\,DL} + \frac{5}{3} f_{s\,LL+IMP}$ (KSI)	22.6	29.2	29.5	29.0	25.7
f_s Total = 1.3 (f_s ovrld)	29.4	38.0	38.4	37.7	33.4
SERVICE LOAD	Span 1 & 3		Span 2	Spans 4 & 5	
VR (K)	73.1	—	76.4	70.0	—

NOTES:
I_s and S_s are the moment of inertia and section modulus of the steel section
I_c and S_c are the moment of inertia and section modulus of the composite section.
Z_s is the plastic section modulus of the steel section.
M' - Elastic Moments - No Load Factors.
VR is the maximum LL+I shear range in span.

DESIGNED	WRS
CHECKED	WCC
DRAWN	DEH
CHECKED	WRS

I-2-D 8-30-80

Prepared by: DAILY & ASSOCIATES ENGINEERS INC. CHAMPAIGN, PEORIA ILLINOIS

STRUCTURAL STEEL DETAILS
F.A.P. ROUTE 546 OVER
HENDERSON CREEK

SECTION (104B) BR
WARREN COUNTY
STA. 100+54.48

D/A JOB NO. 5569.70

MODEL: Default
FILE NAME: P:\2023\23098AD - Bridge Painting (FY 2023)\4 CADD - DWG\4.7 TranSheets\D468J34\D468J34-sht-structural detail 6.dgn

TWM ENGINEERING GEOSPATIAL SERVICES
TWM, INC.
WWW.TWM-INC.COM
IL DESIGN FIRM LICENSE NO: 184-001220

USER NAME = dlee	DESIGNED - JCL	REVISED -	
	DRAWN - JCL	REVISED -	
PLOT SCALE = 10.0000 ' / in.	CHECKED - TBP	REVISED -	
PLOT DATE = 8/6/2024	DATE - JULY 2024	REVISED -	

STATE OF ILLINOIS
DEPARTMENT OF TRANSPORTATION

LOCATION 6 – STRUCTURE INFORMATION
SN 094–0016

SCALE: N/A | SHEET 4 OF 9 SHEETS | STA. | TO STA.

F.A. RTE.	SECTION	COUNTY	TOTAL SHEETS	SHEET NO.
VAR	D4 BRIDGE PAINTING 2025	*	52	47
* HENDERSON, MCDONOUGH, MERCER, WARREN		CONTRACT NO. 68J34		
		ILLINOIS FED. AID PROJECT		

STATE OF ILLINOIS
DEPARTMENT OF TRANSPORTATION

546	(104B) BR	WARREN	50	4-A	SHEET NO. 9-A

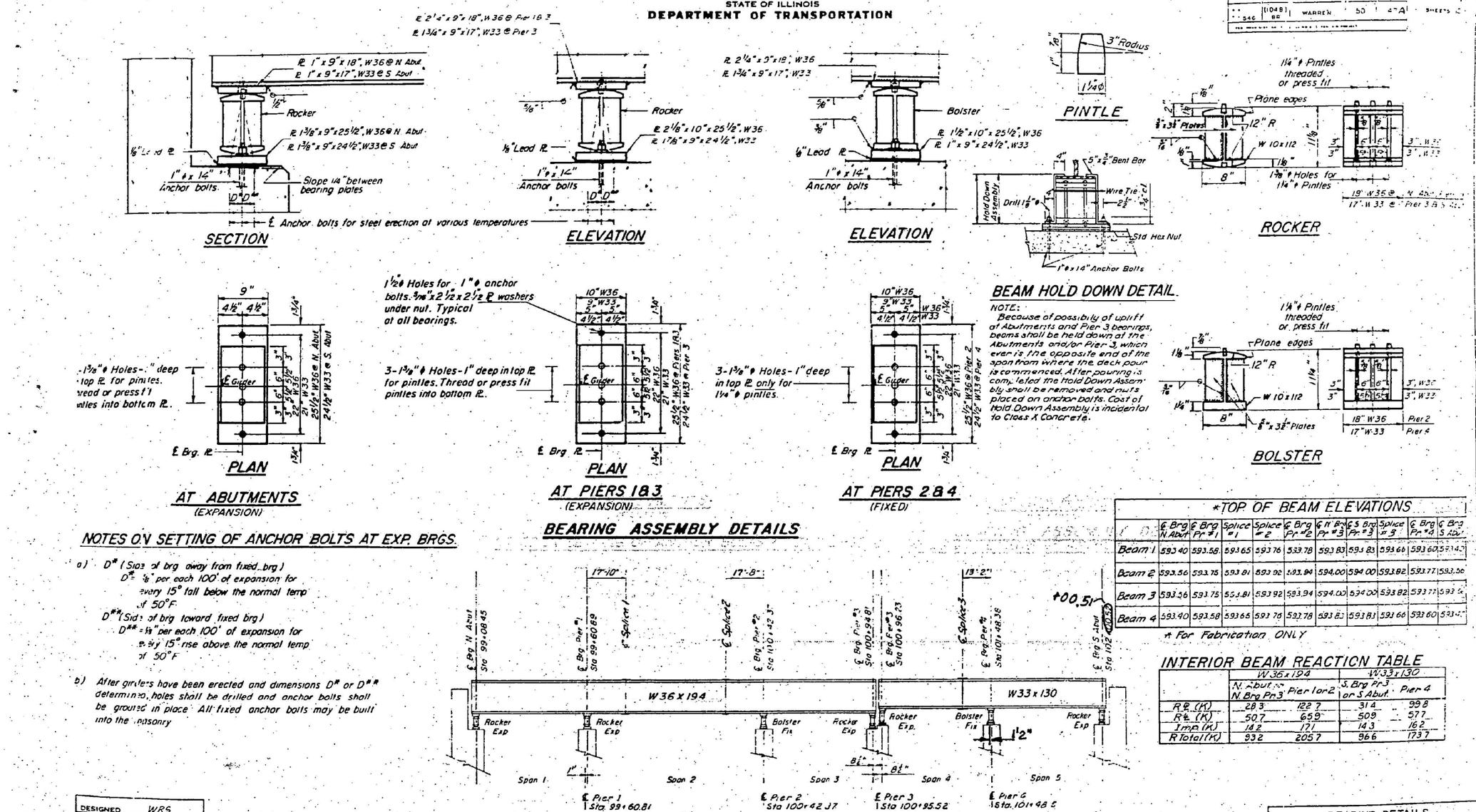

*TOP OF BEAM ELEVATIONS

	℄ Brg N Abut	℄ Brg Pr #1	Splice #1	Splice #2	℄ Brg Pr #2	℄ N Brg Pr #3	℄ S Brg Pr #3	Splice #3	℄ Brg Pr #4	℄ Brg S Abut
Beam 1	593.40	593.58	593.65	593.76	593.78	593.83	593.83	593.66	593.60	593.4[illegible]
Beam 2	593.56	593.75	593.81	593.92	593.94	594.00	594.00	593.82	593.77	593.56
Beam 3	593.56	593.75	593.81	593.92	593.94	594.00	594.00	593.82	593.77	593.5[illegible]
Beam 4	593.40	593.58	593.65	593.76	593.78	593.83	593.83	593.66	593.60	593.4[illegible]

* For Fabrication ONLY

INTERIOR BEAM REACTION TABLE

	W36x194		W33x130	
	N. Abut. or N. Brg Pr 3	Pier 1 or 2	S. Brg Pr 3 or S Abut	Pier 4
RR (K)	28.3	122.7	31.4	99.8
RL (K)	50.7	65.9	50.9	57.7
Imp (K)	14.2	17.1	14.3	16.2
R Total (K)	93.2	205.7	96.6	173.7

DESIGNED	WRS
CHECKED	WCC
DRAWN	DEH
CHECKED	WRS

2-B 4-1-75

Prepared by DAILY & ASSOCIATES ENGINEERS INC. CHAMPAIGN PEORIA ILLINOIS

As Revised
SL - 5-28-85

BEARING DETAILS
F.A.P. ROUTE 546 OVER
HENDERSON CREEK

SECTION (104 B) BR.
WARREN COUNTY
STA. 100+54.48

D/A JOB NO. 5585.75

MODEL: Default
FILE NAME: P:\2023\3098410 - Bridge Painting (FY 2025)\4 CADD - DWG\47 TransSheets\D468J34\D468J34-sht-structural detail 6.dgn

TWM ENGINEERING GEOSPATIAL SERVICES
TWM, INC.
WWW.TWM-INC.COM
IL DESIGN FIRM LICENSE NO: 184-001220

USER NAME = dlee	DESIGNED - JCL	REVISED -	
	DRAWN - JCL	REVISED -	
PLOT SCALE = 10.0000 ' / in.	CHECKED - TBP	REVISED -	
PLOT DATE = 8/6/2024	DATE - JULY 2024	REVISED -	

STATE OF ILLINOIS
DEPARTMENT OF TRANSPORTATION

LOCATION 6 – STRUCTURE INFORMATION
SN 094–0016

SCALE: N/A | SHEET 5 OF 9 SHEETS | STA. | TO STA.

F.A. RTE.	SECTION	COUNTY	TOTAL SHEETS	SHEET NO.
VAR	D4 BRIDGE PAINTING 2025	*	52	48
* HENDERSON, MCDONOUGH, MERCER, WARREN		CONTRACT NO. 68J34		
		ILLINOIS	FED. AID PROJECT	

FOR INFORMATION ONLY

LOCATION 6 (IL 94 & 135 OVER HENDERSON CREEK)

SN 094-0016

Benchmark:
Chiseled "□" at SW corner of bridge, STA. 260+54, Elev. 694.09.

Existing Structure No. 094-0016:
The existing Structure is a 5 Span , 36" Steel I-Beams for span 1,2,& 3 and 33" Steel I-Beams for span 4 & 5 supporting a cast in place concrete deck constructed in 1981 as Section (104B)-BR. The superstructure is supported by closed abutments and solid wall piers with timbers pile supported spread footing that are original to the bridge that was constructed in 1930. Rehabilitation to the substructure caps occurred in 1981 when the superstructure was replaced. It has an out to out deck width of 35'-2" and a 297'-2 1/4" back to back abutment length.

INDEX OF SHEETS

1. General Plan and Elevation
2. Cross Section & Stage Construction
3. Joint Details - North Abutment
4. Joint Details - South Abutment
5. Joint Details - Pier #3
6. Bearing Details - North Abutment
7. Bearing Details - Pier #3 & South Abutment
8. Performed Joint Strip Seal
9. Bar Splicer Assembly & Mechanical Splicer Details
10. North Abutment Concrete Repair Details
11. South Abutment Concrete Repair Details
12. Pier 2 (Looking North) Concrete Repair Details
13. Pier 3 (Looking North) Concrete Repair Details
14. Pier 3 (Looking South) Concrete Repair Details
15. Pier 4 Concrete Repair Details
16. Floor Drains To Be Cleaned

SCOPE OF WORK

1. Setup Traffic Control with Drums
2. Perform Joint Reconstructions
3. Replace Bearings at Abutments and Pier 3
4. Switch Stages and repeat

TOTAL BILL OF MATERIAL

ITEM	UNIT	QUANTITY
Concrete Removal	Cu. Yd.	14.6
Concrete Superstructure	Cu. Yd.	14.5
Furnishing and Erecting Structural Steel	Pound	2750
Reinforcement Bars, Epoxy Coated	Pound	2760
Bar Splicers	Each	48
Preformed Joint Strip Seal	Foot	102
Elastomeric Bearing Assembly, Type I	Each	16
Anchor Bolts, 1"	Each	32
Epoxy Crack Injection	Foot	70
Jack and Remove Existing Bearings	Each	16
Floors and Drains To Be Cleaned	Each	34
Protective Coat, Special	Sq. Yd.	116
Structural Repair of Concrete (Depth Equal to or Less Than 5")	Sq. Ft.	157
Temporary Shoring and Cribbing	Each	2

DESIGN STRESSES

FIELD UNITS

f'c = 3,500 psi
fy = 60,000 psi (Reinforcement)

ELEVATION

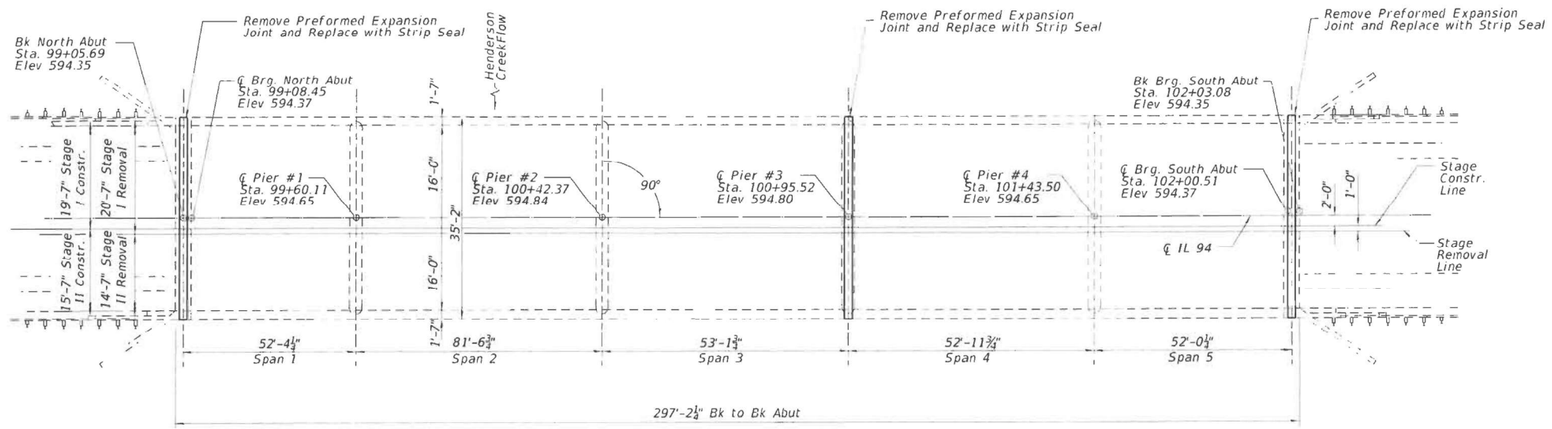

PLAN

GENERAL NOTES

All structural steel shall be AASHTO M-270 grade 36, unless otherwise noted.

Reinforcement bars designated (E) shall be epoxy coated.

Prior to pouring the new concrete deck, all heavy and loose mill scale and other loose or potentially detrimental foreign material shall be removed from the surfaces in contact with concrete. Tightly adhered paint may remain unless otherwise noted. Removal shall be accomplished by methods that will not damage the steel and the cost will be included in Concrete Removal.

Plan dimensions and details relative to existing plans are subject to nominal construction variations. The contractor shall field verify existing dimensions and details af ecting new contruction and make necessary approved adjustments prior to construction or ordering of materials. Such variations shall not be cause for additional compensation for a change in the scope of work, however. The contractor will be paid for the quantity actually furnished at the unit price bid for work.

Existing reinforcement bars extending into the removal area shall be cleaned, straightened, and incorporated into the new construction. Any reinforcement bars that are damaged during Concrete Removal shall be replaced with an approved bar splicer or anchorage system. Cost included with Concrete Removal.

Joint openings shall be adjusted according to article 520.04 of the standard specifications when the deck is poured at an ambient temperature other than 50° Fahrenheit.

All new structural steel and bearing assembly shall be hot-dip galvanized. See Special Provision for "Hot Dip Galvanizing For Structural Steel."

LICENSED STRUCTURAL ENGINEER
CHASE J. CONNOR
081-7200
STATE OF ILLINOIS

Date: 6/25/21

CHASE J. CONNOR, P.E., S.E.
ILLINOIS STRUCTURAL NO. 7200
EXPIRES: NOVEMBER 30, 2022

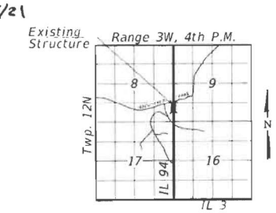

LOCATION SKETCH

BRIDGE REPAIRS
ILLINOIS ROUTE 94
OVER HENDERSON CREEK
WARREN COUNTY
STATION 100+54.48
STRUCTURE NO. 094-0016

Hurst-Rosche, Inc. PROFESSIONAL DESIGN FIRM 1400 E. TREMONT ST. HILLSBORO, IL PH: 217.532.3959 JOB NO. 192-2050	USER NAME =	DESIGNED - CJC	REVISED -
		CHECKED - CMV	REVISED -
	PLOT SCALE =	DRAWN - LO	REVISED -
	PLOT DATE =	CHECKED - CMV	REVISED -

STATE OF ILLINOIS
DEPARTMENT OF TRANSPORTATION

GENERAL PLAN & ELEVATION
STRUCTURE NO. 094-0016
SHEET 1 OF 16 SHEETS

F.A.P. RTE.	SECTION	COUNTY	TOTAL SHEETS	SHEET NO.
546	(104B)-BR	WARREN	28	8
		CONTRACT NO. 68F71		
		ILLINOIS	FED. AID PROJECT	

6/25/2021 7:28:16 AM

MODEL: Default
FILE NAME: X:\Projects\Current\192-2050 IDOT Dist 4 - WO 6 - IL 94 Bridges\DGN\094-0016\Bridge_Plans\0940016-01-sgp&ed.dgn

MODEL: Default
FILE NAME: P:\2023\3098410 - Bridge Painting (FY 2025)\4 CADD - DWG\4.7 Trans\Sheets\0468134\0468134-jhl-structural detail 6.dgn

TWM ENGINEERING GEOSPATIAL SERVICES — TWM, INC. WWW.TWM-INC.COM IL DESIGN FIRM LICENSE NO: 184-001220	USER NAME = dlee	DESIGNED - JCL	REVISED -
		DRAWN - JCL	REVISED -
	PLOT SCALE = 10.0000 ' / in.	CHECKED - TBP	REVISED -
	PLOT DATE = 8/6/2024	DATE - JULY 2024	REVISED -

STATE OF ILLINOIS
DEPARTMENT OF TRANSPORTATION

LOCATION 6 – STRUCTURE INFORMATION
SN 094-0016
SCALE: N/A | SHEET 6 OF 9 SHEETS | STA. TO STA.

F.A. RTE.	SECTION	COUNTY	TOTAL SHEETS	SHEET NO.
VAR	D4 BRIDGE PAINTING 2025	*	52	49
	* HENDERSON, MCDONOUGH, MERCER, WARREN	CONTRACT NO. 68J34		
		ILLINOIS	FED. AID PROJECT	

FOR INFORMATION ONLY

LOCATION 6 (IL 94 & 135 OVER HENDERSON CREEK)

SN 094-0016

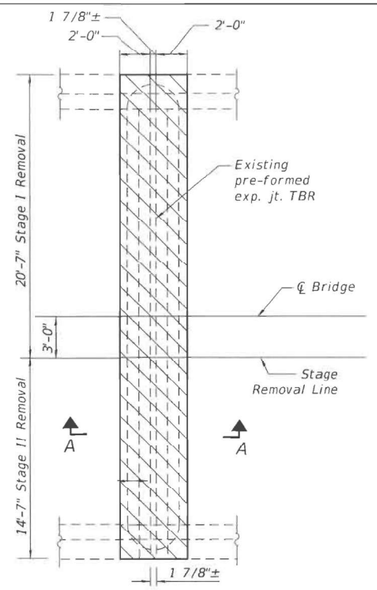

JOINT REMOVAL PLAN

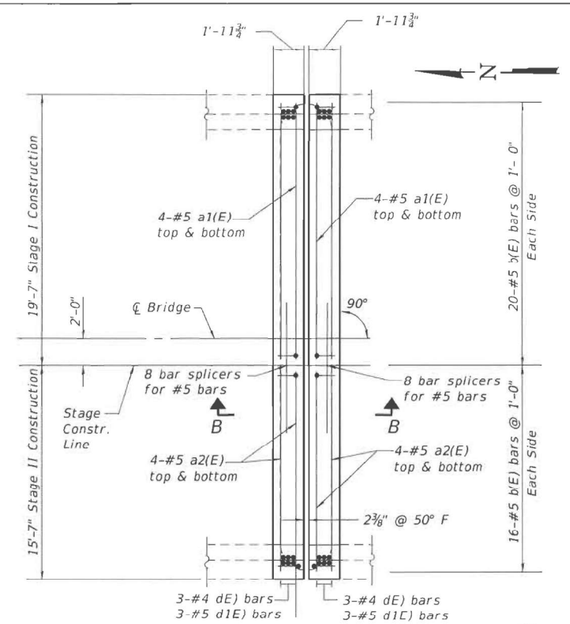

JOINT PLAN

NOTES:

1. Removal of existing expansion joint shall be included in the cost of concrete removal.

2. A 6"X6" Blockout will be permitted in the base of the parapet at the expansion joint in order to facilitate joint seal installation.

3. The contractor shall use extreme care during concrete removal so as not to damage the Wide Flare Steel Beams.

4. In parapet/joint removal areas, existing reinforcement bars shown are to be cleared and incorporated into new construction.

BILL OF MATERIAL
(PIER #3 JOINT)

BAR	#	SIZE	LENGTH	SHAPE
a1(E)	16	#5	19'-3"	
a2(E)	16	#5	15'-3"	
d(E)	12	#4	5'-1"	
d1(E)	12	#5	3'-11"	
b(E)	72	#5	2'-3"	
Reinforcement Bars, Epoxy coated			Pound	840
Concrete Superstructure			Cu. Yd.	5.0
Concrete removal			Cu. Yd.	4.9

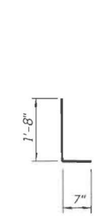

BARS b(E)

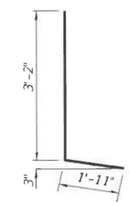

BARS d(E)

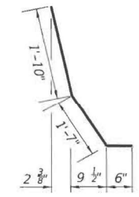

BAR d1(E)

LEGEND

Removal Areas

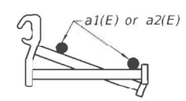

DETAIL A - a1(E) & a2(E)
TOP MAT PLACEMENT

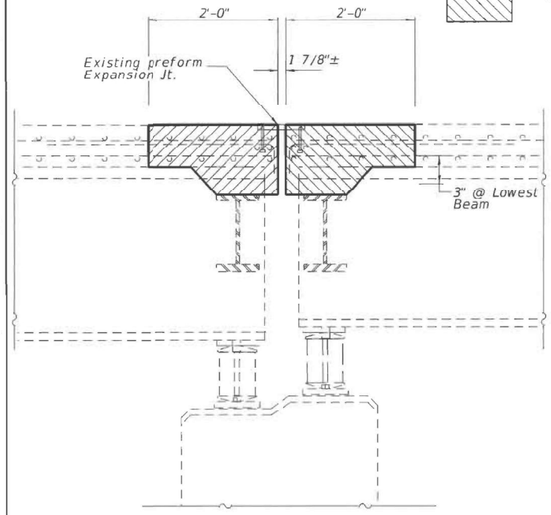

JOINT REMOVAL SECTION A-A

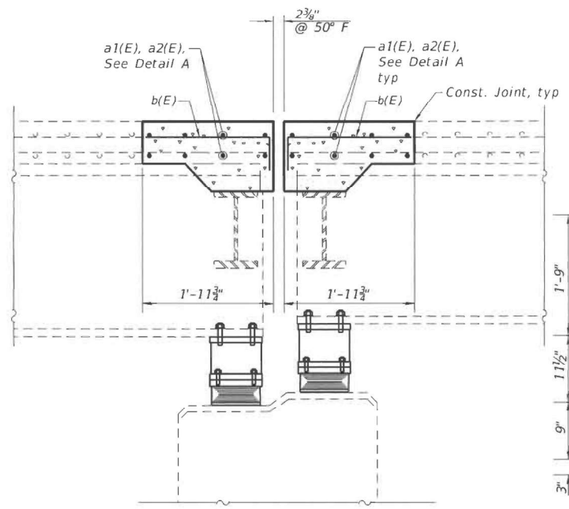

JOINT SECTION B-B

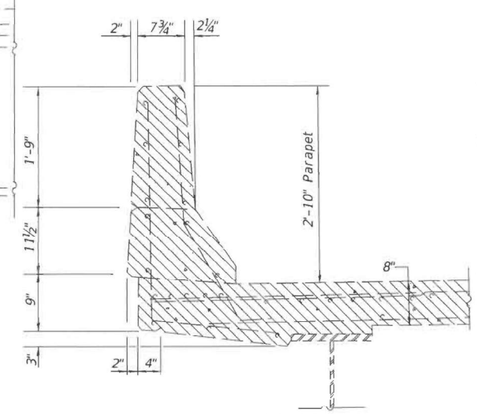

PARAPET REMOVAL CROSS SECTION

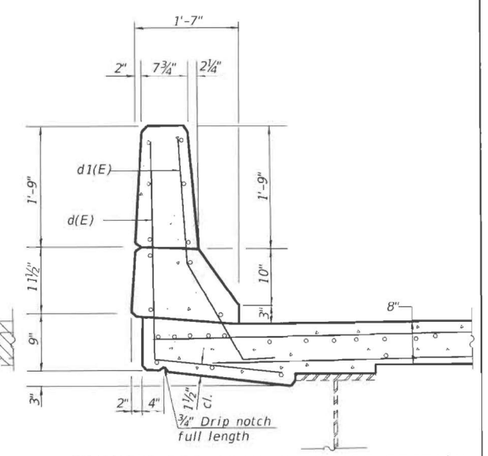

PARAPET REPLACEMENT CROSS SECTION

MODEL: Default
FILE NAME: X:\Projects\Current\192-2050 IDOT Dist 4 - WO 6 - IL 94 Bridges\DGN\094-0016\Bridge_Plans\094001605-joint details Per #3.dgn

Hurst-Rosche, Inc. PROFESSIONAL DESIGN FIRM 184-001220 1400 E. TREMONT ST. HILLSBORO, IL PH: 217.532.3959 JOB NO. 192-2050	USER NAME =	DESIGNED - CJC	REVISED -	STATE OF ILLINOIS DEPARTMENT OF TRANSPORTATION
		CHECKED - CMV	REVISED -	
	PLOT SCALE =	DRAWN - LO	REVISED -	
	PLOT DATE =	CHECKED - CJC	REVISED -	

6/2/2021 11:21:46 AM

JOINT DETAILS - PIER #3
STRUCTURE NO. 094-0016

SHEET 5 OF 16 SHEETS

F.A.P. RTE.	SECTION	COUNTY	TOTAL SHEETS	SHEET NO.
546	(104B)-BR	WARREN	28	12
		CONTRACT NO. 68F71		
		ILLINOIS	FED. AID PROJECT	

MODEL: Default
FILE NAME: P:\2023\3098410 - Bridge Painting IFY 2025\4 CADD - DWG\4.7 Trans\Sheets\0468134\0468134-structural detail 6.dgn

TWM ENGINEERING GEOSPATIAL SERVICES — TWM, INC. WWW.TWM-INC.COM IL DESIGN FIRM LICENSE NO: 184-001220	USER NAME = dlee	DESIGNED - JCL	REVISED -	STATE OF ILLINOIS DEPARTMENT OF TRANSPORTATION
		DRAWN - JCL	REVISED -	
	PLOT SCALE = 10.0000 ' / in.	CHECKED - TBP	REVISED -	
	PLOT DATE = 8/6/2024	DATE - JULY 2024	REVISED -	

LOCATION 6 – STRUCTURE INFORMATION
SN 094-0016

SCALE: N/A | SHEET 7 OF 9 SHEETS | STA. TO STA.

F.A. RTE.	SECTION	COUNTY	TOTAL SHEETS	SHEET NO.
VAR	D4 BRIDGE PAINTING 2025	*	52	50
	* HENDERSON, MCDONOUGH, MERCER, WARREN	CONTRACT NO. 68J34		
		ILLINOIS	FED. AID PROJECT	

FOR INFORMATION ONLY
LOCATION 6 (IL 94 & 135 OVER HENDERSON CREEK)
SN 094-0016

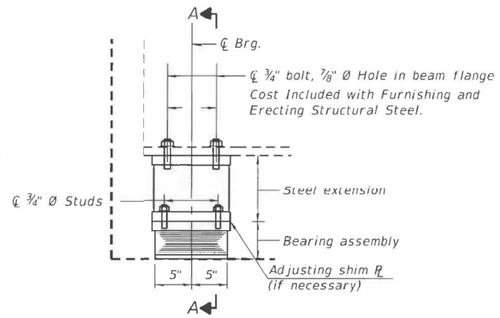

ELEVATION AT NORTH ABUT.

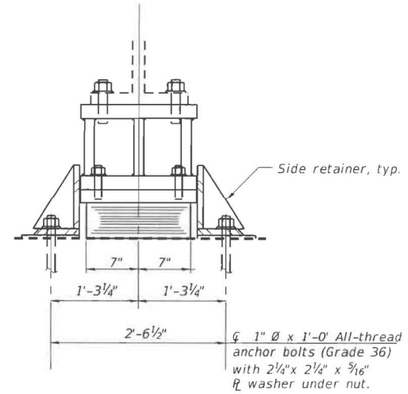

SECTION A-A

TYPE I ELASTOMERIC EXP. BRG.

Notes:

Anchor bolts shall be ASTM F1554 all-thread (or an Engineer approved alternate material) of grades and dimensions specified. ASTM A307 grade C anchor bolts may be used in lieu of ASTM F1554 grade 36 (Fy=36ksi). The corresponding specified grade of AASHTO M314 anchor bolts may be used in lieu of ASTM F1554.

Drilled and set anchor bolts shall be installed according to Article 521.06 of Standard Specifications.

Side retainers and ¼" stainless steel plates required for the bearing assembly shall be included in the cost of Elastomeric Bearing Assembly, Type I.

The minimum jack capacity required is 50 tons.

Existing diaphragm removal and reinstallation may be required to facilitate drilling holes, cost to be included with Jack and Remove Existing Bearings.

Prior to ordering any materials, the contractor shall verify in the field all bearings height and shim thickness dimensions. Adjustment must account for deck heave due to pack rust (if present).

Two 1/8" adjusting shims shall be provided for each bearing in addition to all other plates or shims and placed as shown on bearing details.

New steel extensions, connection bolts, fill plates and shim plates are included in Furnishing and Erecting Structural Steel.

Anchor bolts and side retainers at all supports shall be installed as each member is erected unless an equivalent temporary means of lateral restraint is used.

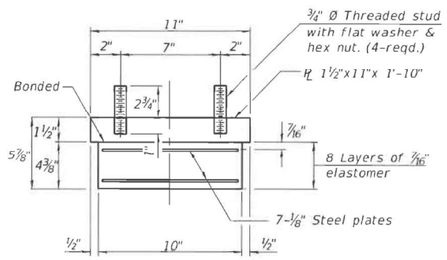

BEARING ASSEMBLY

Note:
Shim plates shall not be placed under bearing assembly.

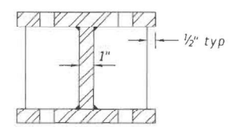

SECTION C-C

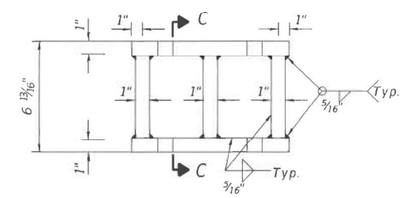

ELEVATION STEEL EXTENSION

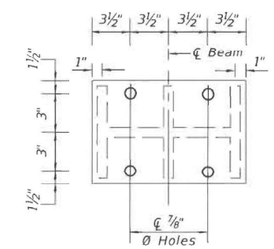

PLAN STEEL EXTENSION

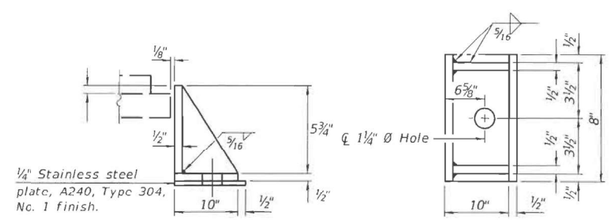

SIDE RETAINER

Equivalent rolled angle with stiffeners will be allowed in lieu of welded plates.

GIRDER REACTIONS

	W 36 X 194
	N Abut
RD (k)	28.3
RL (k)	50.7
Imp. (k)	14.2
RTotal(k)	93.2

BILL OF MATERIAL

Item	Unit	Total
Furnishing and Erecting Structural Steel	Pound	580
Elastomeric Bearing Assembly Type I	Each	4
Anchor Bolts, 1"	Each	8
Jack and Remove Existing Bearings	Each	4

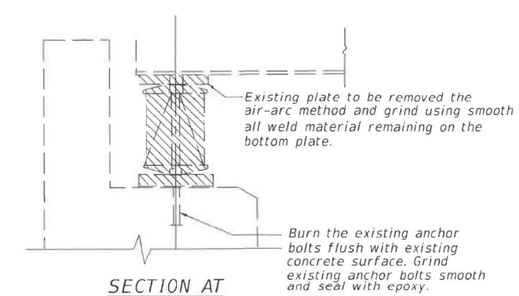

SECTION AT SOUTH ABUTMENT

EXISTING BEARING REMOVAL DETAIL

Cost is included with jack & remove existing bearings.

MODEL: Default
FILE NAME: X:\Projects\Current\192-2050 IDOT Dist 4 - WO 6 - IL 94 Bridges\DGN\094-0016\Bridge_Plans\0940016-06-bearing details.dgn

Hurst-Rosche, Inc. PROFESSIONAL DESIGN FIRM 184-001220 1400 E. TREMONT ST. HILLSBORO, IL PH: 217.532.3959 JOB NO. 192-2050	USER NAME =	DESIGNED - CJC	REVISED -	STATE OF ILLINOIS DEPARTMENT OF TRANSPORTATION
		CHECKED - CMV	REVISED -	
	PLOT SCALE =	DRAWN - LO	REVISED -	
	PLOT DATE =	CHECKED - CJC	REVISED -	

6/2/2021 11:21:46 AM

BEARING DETAILS - NORTH ABUTMENT
STRUCTURE NO. 094-0016
SHEET 6 OF 16 SHEETS

F.A.P. RTE.	SECTION	COUNTY	TOTAL SHEETS	SHEET NO.
546	(104B)-BR	WARREN	28	13
		CONTRACT NO. 68F71		
		ILLINOIS	FED. AID PROJECT	

MODEL: Default
FILE NAME: P:\2023\3693840 - Bridge Painting (FY 2023)\4 CADD - DWG\4.7 TranSheets\0468134\0468134-ph-structural detail 6.dgn

TWM ENGINEERING GEOSPATIAL SERVICES	TWM, INC. WWW.TWM-INC.COM IL DESIGN FIRM LICENSE NO: 184-001220	USER NAME = dlee	DESIGNED - JCL	REVISED -
			DRAWN - JCL	REVISED -
		PLOT SCALE = 10.0000 ' / in.	CHECKED - TBP	REVISED -
		PLOT DATE = 8/6/2024	DATE - JULY 2024	REVISED -

STATE OF ILLINOIS
DEPARTMENT OF TRANSPORTATION

LOCATION 6 – STRUCTURE INFORMATION
SN 094-0016
SCALE: N/A SHEET 8 OF 9 SHEETS STA. TO STA.

F.A. RTE.	SECTION	COUNTY	TOTAL SHEETS	SHEET NO.
VAR	D4 BRIDGE PAINTING 2025	*	52	51
* HENDERSON, MCDONOUGH, MERCER, WARREN		CONTRACT NO. 68J34		
		ILLINOIS	FED. AID PROJECT	

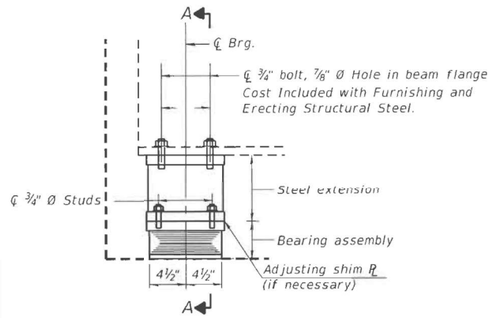

ELEVATION AT SOUTH ABUT.

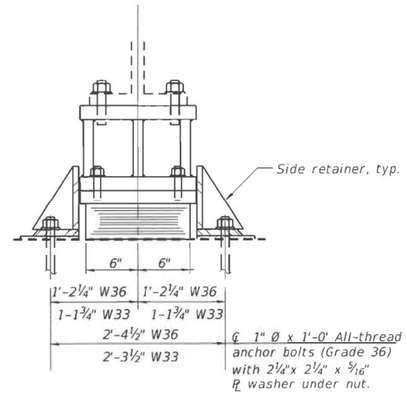

SECTION A-A

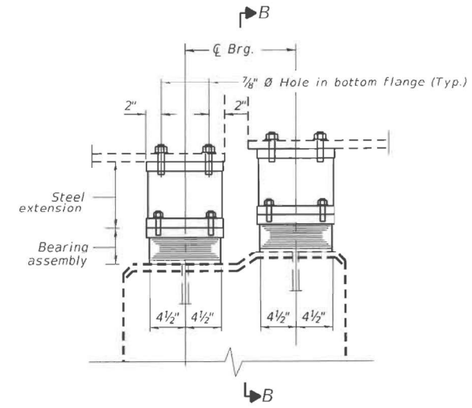

ELEVATION AT PIER

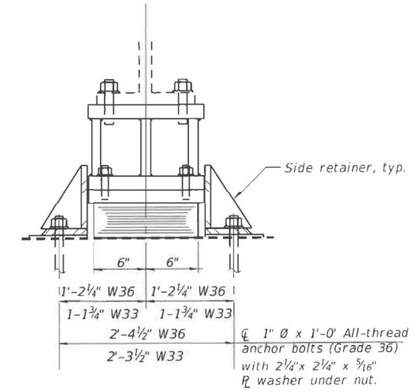

SECTION B-B

TYPE I ELASTOMERIC EXP. BRG.

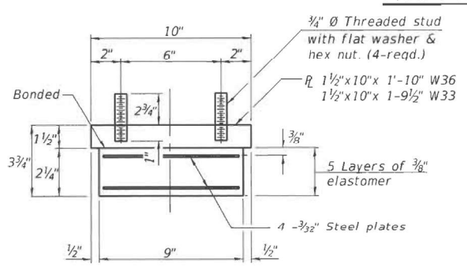

BEARING ASSEMBLY

Note:
Shim plates shall not be placed under bearing assembly.

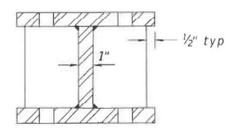

SECTION C-C

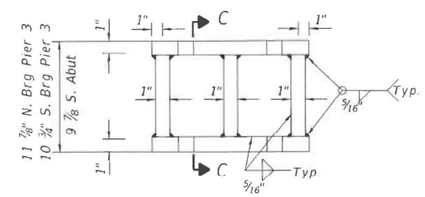

ELEVATION STEEL EXTENSION

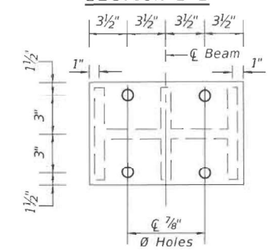

PLAN STEEL EXTENSION

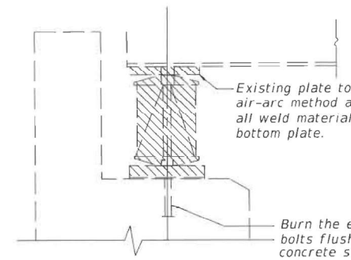

SECTION AT SOUTH ABUTMENT

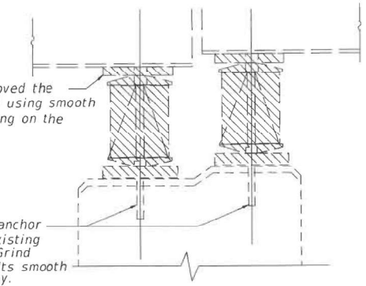

SECTION AT PIER 3

EXISTING BEARING REMOVAL DETAIL

Cost is included with jack & remove existing bearings.

Notes:

Anchor bolts shall be ASTM F1554 all-thread (or an Engineer approved alternate material) of grades and dimensions specified. ASTM A307 grade C anchor bolts may be used in lieu of ASTM F1554 grade 36 (Fy=36ksi).

The corresponding specified grade of AASHTO M314 anchor bolts may be used in lieu of ASTM F1554.

Drilled and set anchor bolts shall be installed according to Article 521.06 of Standard Specifications.

Side retainers and ¼" stainless steel plates required for the bearing assembly shall be included in the cost of Elastomeric Bearing Assembly, Type I.

The minimum jack capacity required is 50 tons.

Existing diaphragm removal and reinstallation may be required to facilitate drilling holes, cost to be included with jack and remove existing Bearings.

Prior to ordering any materials, the contractor shall verify in the field all bearings height and shim thickness dimensions. Adjustment must account for deck heave due to pack rust (if present).

Two 1/8" adjusting shims shall be provided for each bearing in addition to all other plates or shims and placed as shown on bearing details.

New steel extensions, connection bolts, fill plates and shim plates are included in Furnishing and Erecting Structural Steel.

Anchor bolts and side retainers at all supports shall be installed as each member is erected unless an equivalent temporary means of lateral restraint is used.

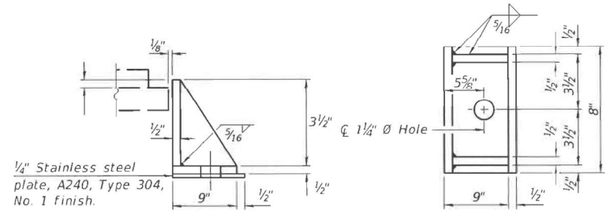

SIDE RETAINER

Equivalent rolled angle with stiffeners will be allowed in lieu of welded plates.

GIRDER REACTIONS

	W 36 X 194 N Brg Pier 3	W 33 X 130 S Abut or S Brg Pier 3
RD (k)	28.3	31.4
RL (k)	50.7	50.9
Imp. (k)	14.2	14.3
RTotal(k)	93.2	96.6

BILL OF MATERIAL

Item	Unit	Total
Furnishing and Erecting Structural Steel	Pound	2170
Elastomeric Bearing Assembly Type I	Each	12
Anchor Bolts, 1"	Each	24
Jack and Remove Existing Bearings	Each	12

MODEL: Default
FILE NAME: X:\Projects\Current\92-2050 IDOT Dist 4 - WO 6 - IL 94 Bridges\DGN\094-0016\Bridge_Plans\0940016-07-bearing details.dgn

Hurst-Rosche, Inc.
PROFESSIONAL DESIGN NURSES CONSULTANTS
1400 E. TREMONT ST.
HILLSBORO, IL
PH: 217.532.3959
JOB NO. 192-2050

6/2/2021 11:21:46 AM

USER NAME =	DESIGNED - CJC	REVISED -	
	CHECKED - CMV	REVISED -	
PLOT SCALE =	DRAWN - LO	REVISED -	
PLOT DATE =	CHECKED - CJC	REVISED -	

STATE OF ILLINOIS
DEPARTMENT OF TRANSPORTATION

BEARING DETAILS - PIER 3 & SOUTH ABUTMENT
STRUCTURE NO. 094-0016

SHEET 7 OF 18 SHEETS

F.A.P. RTE.	SECTION	COUNTY	TOTAL SHEETS	SHEET NO.
546	(104B)-BR	WARREN	28	14
		CONTRACT NO. 68F71		
		ILLINOIS	FED. AID PROJECT	

MODEL: Default
FILE NAME: P:\2023\3098410 - Bridge Painting (FY 2025)\4 CADD - DWG\47 Trans\Sheets\0468J34\0468J34-int-structural detail 6.dgn

TWM, INC.
WWW.TWM-INC.COM
ENGINEERING
GEOSPATIAL SERVICES
IL DESIGN FIRM LICENSE NO: 184-001220

USER NAME = dlee	DESIGNED - JCL	REVISED -	
	DRAWN - JCL	REVISED -	
PLOT SCALE = 10.0000 ' / in.	CHECKED - TBP	REVISED -	
PLOT DATE = 8/6/2024	DATE - JULY 2024	REVISED -	

STATE OF ILLINOIS
DEPARTMENT OF TRANSPORTATION

LOCATION 6 – STRUCTURE INFORMATION
SN 094-0016

SCALE: N/A SHEET 9 OF 9 SHEETS STA. TO STA.

F.A. RTE.	SECTION	COUNTY	TOTAL SHEETS	SHEET NO.
VAR	D4 BRIDGE PAINTING 2025	*	52	52
* HENDERSON, MCDONOUGH, MERCER, WARREN		CONTRACT NO. 68J34		
		ILLINOIS	FED. AID PROJECT	