11-08-2024 LETTING ITEM 040

F.A.P RTE.	SECTION	COUNTY	TOTAL SHEETS	SHEET NO.
673	(112BR)BR	LIVINGSTON	65	1
		ILLINOIS	CONTRACT NO. 66L79	

STATE OF ILLINOIS
DEPARTMENT OF TRANSPORTATION

P-93-006-21
D-93-037-24

INDEX OF SHEETS

PROPOSED HIGHWAY PLANS

FAP ROUTE 673 (IL 116)
SECTION (112BR)BR
PROJECT BFP-7NW6(945)
BRIDGE REPLACEMENT
LIVINGSTON COUNTY

C-93-073-24

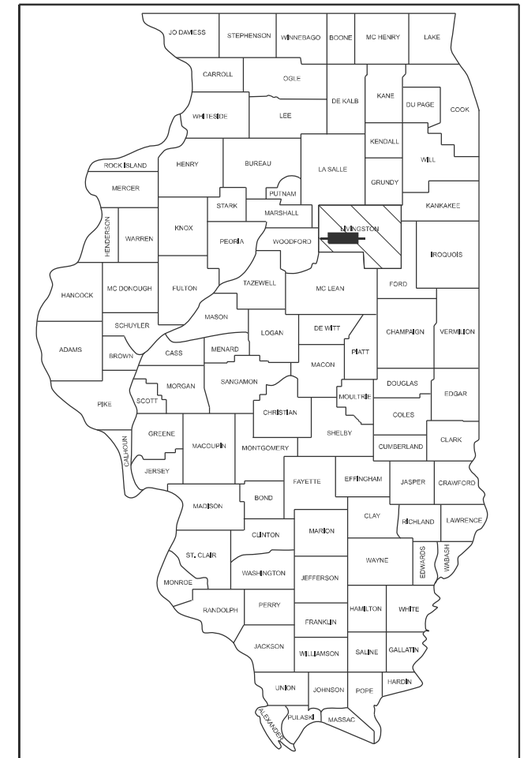

LOCATION OF SECTION INDICATED THUS: -

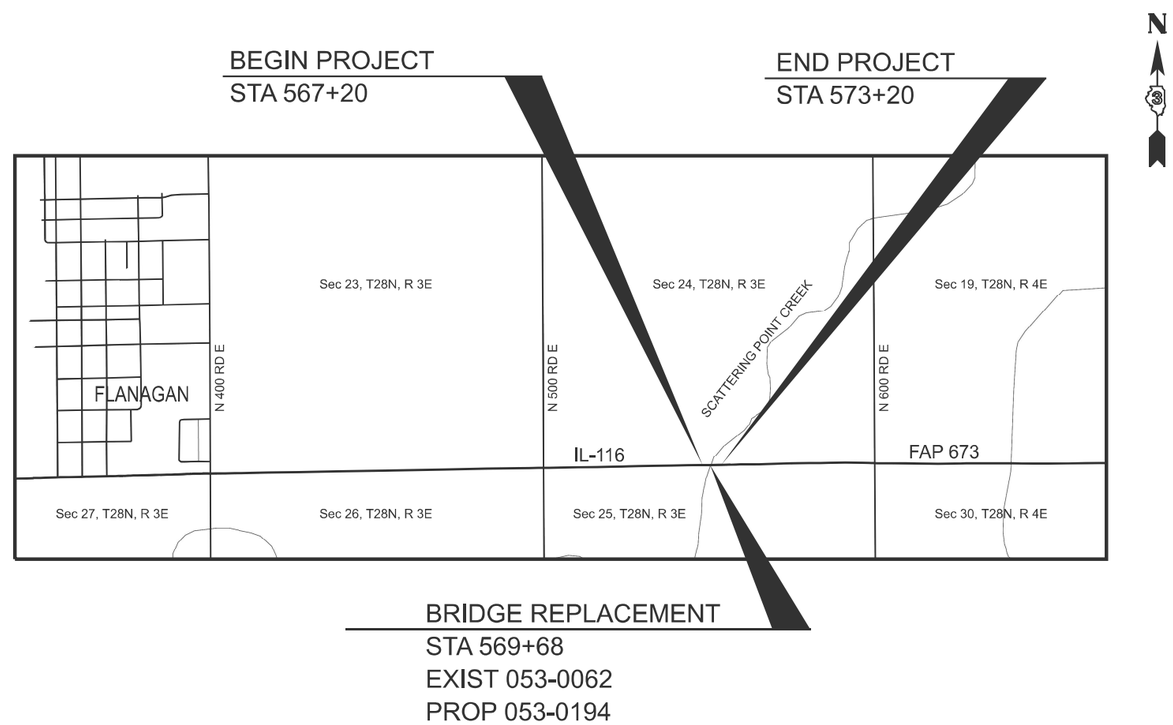

GROSS LENGTH = 600.00 FT. = 0.113 MILE
NET LENGTH = 600.00 FT. = 0.113 MILE

FUNCTIONAL CLASSIFICATION
MINOR ARTERIAL
2023 ADT = 3050
P.V. = 89.2% S.U. = 4.6% M.U. = 6.2%

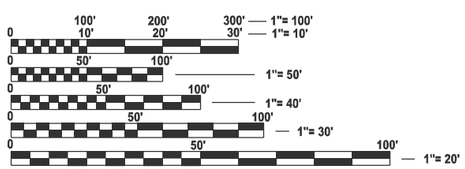

FULL SIZE PLANS HAVE BEEN PREPARED USING STANDARD ENGINEERING SCALES. REDUCED SIZED PLANS WILL NOT CONFORM TO STANDARD SCALES. IN MAKING MEASUREMENTS ON REDUCED PLANS, THE ABOVE SCALES MAY BE USED.

J.U.L.I.E.
JOINT UTILITY LOCATION INFORMATION FOR EXCAVATION
1-800-892-0123
OR 811

STATE OF ILLINOIS
DEPARTMENT OF TRANSPORTATION

SUBMITTED August 21, 20 24
Twila Thompson MB
REGIONAL ENGINEER

October 4, 2024
ENGINEER OF DESIGN AND ENVIRONMENT

October 4, 2024
DIRECTOR OF HIGHWAYS PROJECT IMPLEMENTATION

PROJECT ENGINEER: JOE KANNEL, P.E.
UNIT CHIEF: STEPHENIE CARMIN
TOWNSHIP(S): NEBRASKA

CONTRACT NO. 66L79

PRINTED BY THE AUTHORITY OF THE STATE OF ILLINOIS

GENERAL NOTES

EXCEPT AS NOTED ON THE PLANS, PAVEMENT GRADES SHOWN ARE AT THE TOP OF PAVEMENT SURFACES.

BEFORE ORDERING PIPE CULVERTS OR PIPE DRAINS, THE CONTRACTOR SHALL CONSULT THE ENGINEER FOR EXACT LENGTHS.

THE ENGINEER WILL BE THE SOLE JUDGE CONCERNING CURING TIME FOR THE VARIOUS HMA LIFTS.

THE FINISHED EARTHWORK SHALL HAVE A VEGETATION SUSTAINING SOIL COVERING THE TOP FOUR INCHES (100 MILLIMETERS) IN AREAS TO BE SEEDED OR SODDED. THE VEGETATION SUSTAINING SOIL REQUIRED WILL NOT BE PAID FOR SEPARATELY BUT WILL BE INCLUDED IN THE COST OF FURNISHED EXCAVATION.

ALL ELEVATIONS REFERRING TO U.S.G.S. MEAN SEA LEVEL DATUM.

THE FOLLOWING RATES OF APPLICATION HAVE BEEN USED IN CALCULATING PLAN QUANTITIES:

GRANULAR MATERIALS	2.05	TONS / CU YD
HMA RESURFACING	112	LBS / SQ YD / IN
SHORT TERM PAVEMENT MARKING	10	FT /100 FT OF APPLICATION
MIX FOR CRACKS, JTS & FLGWYS	0.0003	TONS / SQ YD
BINDER (HAND METHOD)	0.0005	TONS / SQ YD

MEMBERS OF JULIE KNOWN TO BE WITHIN THE LIMITS OF THE IMPROVEMENT ARE:
AMEREN ELECTRIC
FRONTIER COMMUNICATIONS

LIST OF ILLINOIS DOT HIGHWAY STANDARDS

000001-08	STANDARD SYMBOLS, ABBREVIATIONS AND PATTERNS
001006	DECIMAL OF AN INCH AND OF A FOOT
280001-07	TEMPORARY EROSION CONTROL SYSTEMS
420406	PAVEMENT CONNECTOR (HMA) FOR BRIDGE APPROACH SLAB
515001-04	NAME PLATE FOR BRIDGES
542401-04	METAL FLARED END SECTION FOR PIPE CULVERTS
601101-02	CONCRETE HEADWALL FOR PIPE UNDERDRAINS
630001-13	STEEL PLATE BEAM GUARDRAIL
630201-07	PCC/HMA STABILIZATION AT STEEL PLATE BEAM GUARDRAIL
631061-01	TRAFFIC BARRIER TERMINAL, TYPE 13
642006-01	SHOULDER RUMBLE STRIPS, 8 INCH
701001-02	OFF-ROAD OPERATIONS 2L, 2W, MORE THAN 15' AWAY
701006-05	OFF-ROAD OPERATIONS 2L, 2W, 15' TO 24" FROM PAVEMENT EDGE
701011-04	OFF-ROAD MOVING OPERATIONS 2L, 2W, DAY ONLY
701201-05	LANE CLOSURE, 2L, 2W, DAY ONLY, FOR SPEEDS ≥ 45 MPH
701301-04	LANE CLOSURE, 2L, 2W, SHORT TIME OPERATIONS
701306-04	LANE CLOSURE, 2L, 2W, SLOW MOVING OPERATIONS DAY ONLY, FOR SPEEDS ≥ 45 MPH
701311-03	LANE CLOSURE, 2L, 2W, MOVING OPERATIONS - DAY ONLY
701321-18	LANE CLOSURE, 2L, 2W, BRIDGE REPAIR WITH BARRIER
701326-04	LANE CLOSURE, 2L, 2W, PAVEMENT WIDENING, FOR SPEEDS ≥ 45 MPH
701901-09	TRAFFIC CONTROL DEVICES
704001-08	TEMPORARY CONCRETE BARRIER
725001-01	OBJECT AND TERMINAL MARKERS
781001-04	TYPICAL APPLICATIONS RAISED REFLECTIVE PAVEMENT MARKERS
782006-01	GUARDRAIL AND BARRIER WALL REFLECTOR MOUNTING DETAILS

COMMITMENTS

EXISTING WEIGHT LIMIT SIGNS TO BE RETURNED TO IDOT

HMA MIXTURE REQUIREMENT TABLE

LOCATIONS:	ENTIRE PROJECT	ENTIRE PROJECT	ENTIRE PROJECT	ENTIRE PROJECT	ENTIRE PROJECT	ENTIRE PROJECT
MIXTURE USE(S):	HMA SURFACE	HMA BINDER	HMA SHOULDER BOTTOM LIFTS (4" AND 2.5")	HMA SHOULDER TOP LIFT (1.5")	HMA STABILIZATION BOTTOM LIFT (4")	HMA STABILIZATION TOP LIFT (2")
BINDER GRADE (PG):	PG 64-22	PG 64-22	PG 64-22	PG 64-22	PG 64-22	PG 64-22
DESIGN AIR VOIDS:	4.0% @ N50	4.0% @ N50	4.0% @ N50	4.0% @ N50	4.0% @ N50	4.0% @ N50
MIXTURE COMPOSITION: (MIXTURE GRADATION)	IL 9.5	IL 19.0	IL 19.0	IL 9.5	IL 19.0	IL 9.5
FRICTION AGGREGATE:	MIXTURE D					
MIXTURE WEIGHT:	112.0 LB/SY/IN	112.0 LB/SY/IN	112.0 LB/SY/IN	112.0 LB/SY/IN	112.0 LB/SY/IN	112.0 LB/SY/IN
QUALITY MANAGEMENT PROGRAM:	QCQA	QCQA	QCQA	QCQA	QCQA	QCQA
SUBLOT SIZE:	N/A	N/A	N/A	N/A	N/A	N/A
DENSITY TEST METHOD:	CORES/NUCLEAR	CORES/NUCLEAR	CORES/NUCLEAR	CORES/NUCLEAR	SATISFACTION OF ENGINEER	SATISFACTION OF ENGINEER
MATERIAL TRANSFER DEVICE (REQUIRED):	NO	NO	NO	NO	NO	NO

STATE OF ILLINOIS
DEPARTMENT OF TRANSPORTATION
DISTRICT THREE
AS BUILT INFORMATION

SUPERVISING CONSTRUCTION FIELD ENGINEER

RESIDENT ENGINEER / TECHNICIAN

START & END DATES OF CONSTRUCTION:

INSPECTORS:

CONSTR. CODE
80% FED 20% STATE
BRIDGE
0010
S.N. 053-0194

CODE NO.	ITEM	UNIT	TOTAL QUANTITY	
20200100	EARTH EXCAVATION	CU YD	260	260
20300100	CHANNEL EXCAVATION	CU YD	543	543
20400800	FURNISHED EXCAVATION	CU YD	60	60
21400100	GRADING AND SHAPING DITCHES	FOOT	786	786
25000210	SEEDING, CLASS 2A	ACRE	0.5	0.5
25000400	NITROGEN FERTILIZER NUTRIENT	POUND	33	33
25000500	PHOSPHORUS FERTILIZER NUTRIENT	POUND	33	33
25000600	POTASSIUM FERTILIZER NUTRIENT	POUND	33	33
25100630	EROSION CONTROL BLANKET	SQ YD	1724	1724
28000250	TEMPORARY EROSION CONTROL SEEDING	POUND	73	73
28000305	TEMPORARY DITCH CHECKS	FOOT	144	144
28000400	PERIMETER EROSION BARRIER	FOOT	985	985
28000500	INLET AND PIPE PROTECTION	EACH	2	2
28001100	TEMPORARY EROSION CONTROL BLANKET	SQ YD	3448	3448

*SPECIALITY ITEM

MODEL: Default
FILE NAME: c:\pw_work\pwidot\zagarjkd\D0861\86L79-SOQ.dgn

USER NAME = Joseph.Zagar	DESIGNED -	REVISED -
	DRAWN -	REVISED -
	CHECKED -	REVISED -
PLOT DATE = 8/13/2024	DATE -	REVISED -

STATE OF ILLINOIS
DEPARTMENT OF TRANSPORTATION

SUMMARY OF QUANTITIES

SCALE: | SHEET OF SHEETS | STA. TO STA.

F.A.P. RTE.	SECTION	COUNTY	TOTAL SHEETS	SHEET NO.
673	(112BR)ES	LIVINGSTON	65	3

CONTRACT NO. 66L79

ILLINOIS | FED. AID PROJECT

REV. 10/7/24REV. 9/23/24REV. 8/27/24

CONSTR. CODE
80% FED 20% STATE

CODE NO.	ITEM	UNIT	TOTAL QUANTITY	BRIDGE 0010 S.N. 053-0194
28100107	STONE RIPRAP, CLASS A4	SQ YD	917	917
28200200	FILTER FABRIC	SQ YD	917	917
31101810	SUBBASE GRANULAR MATERIAL, TYPE B 12"	SQ YD	132	132
40600290	BITUMINOUS MATERIALS (TACK COAT)	POUND	752	752
40600370	LONGITUDINAL JOINT SEALANT	FOOT	452	452
40600400	MIXTURE FOR CRACKS, JOINTS, AND FLANGEWAYS	TON	1	1
40600900	HOT-MIX ASPHALT BINDER COURSE (HAND METHOD), N50	TON	1	1
40600990	TEMPORARY RAMP	SQ YD	137	137
40603080	HOT-MIX ASPHALT BINDER COURSE, IL-19.0, N50	TON	200	200
40604060	HOT-MIX ASPHALT SURFACE COURSE, IL-9.5, MIX "D", N50	TON	103	103
42000070	PAVEMENT CONNECTOR (HMA) FOR BRIDGE APPROACH SLAB	SQ YD	132	132
44000100	PAVEMENT REMOVAL	SQ YD	88	88
44000157	HOT-MIX ASPHALT SURFACE REMOVAL, 2"	SQ YD	75	75
44000164	HOT-MIX ASPHALT SURFACE REMOVAL, 3 3/4"	SQ YD	739	739

*SPECIALITY ITEM

MODEL: Default
FILE NAME: c:\pw_work\pwidot\zagarjk\d1008618\66L79-SOQ.dgn

USER NAME = Joseph.Zagar	DESIGNED -	REVISED -	STATE OF ILLINOIS DEPARTMENT OF TRANSPORTATION
	DRAWN -	REVISED -	
	CHECKED -	REVISED -	
PLOT DATE = 8/13/2024	DATE -	REVISED -	

SUMMARY OF QUANTITIES

SCALE: SHEET OF SHEETS STA. TO STA.

F.A.P. RTE.	SECTION	COUNTY	TOTAL SHEETS	SHEET NO.
673	(112BR)ES	LIVINGSTON	65	4
		CONTRACT NO. 66L79		
	ILLINOIS	FED. AID PROJECT		

REV. 8/27/24

CODE NO.	ITEM	UNIT	TOTAL QUANTITY	CONSTR. CODE 80% FED 20% STATE BRIDGE 0010 S.N. 053-0194
44000166	HOT-MIX ASPHALT SURFACE REMOVAL, 4 1/4"	SQ YD	376	376
44004000	PAVED DITCH REMOVAL	FOOT	159	159
44004250	PAVED SHOULDER REMOVAL	SQ YD	670	670
48102100	AGGREGATE WEDGE SHOULDER, TYPE B	TON	11	11
48203029	HOT-MIX ASPHALT SHOULDERS, 8"	SQ YD	651	651
50100100	REMOVAL OF EXISTING STRUCTURES	EACH	1	1
50105220	PIPE CULVERT REMOVAL	FOOT	68	68
50200100	STRUCTURE EXCAVATION	CU YD	112	112
50200300	COFFERDAM EXCAVATION	CU YD	132	132
50201101	COFFERDAM (TYPE 1) (LOCATION - 1)	EACH	1	1
50201102	COFFERDAM (TYPE 1) (LOCATION - 2)	EACH	1	1
50300225	CONCRETE STRUCTURES	CU YD	147.4	147.4
50300255	CONCRETE SUPERSTRUCTURE	CU YD	169.2	169.2
50300260	BRIDGE DECK GROOVING	SQ YD	554	554

*SPECIALITY ITEM

MODEL: Default
FILE NAME: c:\pw_work\pwidot\zagarjkd\D0861\66L79-SOQ.dgn

USER NAME = Joseph.Zagar	DESIGNED -	REVISED -	
	DRAWN -	REVISED -	
	CHECKED -	REVISED -	
PLOT DATE = 8/13/2024	DATE -	REVISED -	

STATE OF ILLINOIS
DEPARTMENT OF TRANSPORTATION

SUMMARY OF QUANTITIES

SCALE: SHEET OF SHEETS STA. TO STA.

F.A.P. RTE.	SECTION	COUNTY	TOTAL SHEETS	SHEET NO.
673	(112BR)ES	LIVINGSTON	65	5

CONTRACT NO. 66L79

ILLINOIS FED. AID PROJECT

REV. 10/7/24REV. 8/27/24

CONSTR. CODE
80% FED 20% STATE

CODE NO.	ITEM	UNIT	TOTAL QUANTITY	BRIDGE 0010 S.N. 053-0194
50300300	PROTECTIVE COAT	SQ YD	595	595
50301350	CONCRETE SUPERSTRUCTURE (APPROACH SLAB)	CU YD	105.4	105.4
50800205	REINFORCEMENT BARS, EPOXY COATED	POUND	113880	113880
50800515	BAR SPLICERS	EACH	723	723
50900211	STEEL RAILING, TYPE IL-OH	FOOT	225	225
51200959	FURNISHING METAL SHELL PILES 14" X 0.312"	FOOT	670	670
51202305	DRIVING PILES	FOOT	670	670
51203200	TEST PILE METAL SHELLS	EACH	4	4
51204650	PILE SHOES	EACH	24	24
51500100	NAME PLATES	EACH	1	1
52200010	TEMPORARY SHEET PILING	SQ FT	509	509
542D0223	PIPE CULVERTS, CLASS D, TYPE 1 18"	FOOT	108	108
54213453	END SECTIONS 18"	EACH	4	4
58600101	GRANULAR BACKFILL FOR STRUCTURES	CU YD	55	55

*SPECIALITY ITEM

MODEL: Default
FILE NAME: c:\pw_work\pwidot\zagarjk\d1008618\66L79-SOQ.dgn

USER NAME = Joseph.Zagar	DESIGNED -	REVISED -	
	DRAWN -	REVISED -	
	CHECKED -	REVISED -	
PLOT DATE = 8/13/2024	DATE -	REVISED -	

STATE OF ILLINOIS
DEPARTMENT OF TRANSPORTATION

SUMMARY OF QUANTITIES

SCALE: SHEET OF SHEETS STA. TO STA.

F.A.P. RTE.	SECTION	COUNTY	TOTAL SHEETS	SHEET NO.
673	(112BR)ES	LIVINGSTON	65	6
		CONTRACT NO. 66L79		
	ILLINOIS	FED. AID PROJECT		

REV. 8/27/24

CONSTR. CODE
80% FED 20% STATE
BRIDGE
0010
S.N. 053-0194

	CODE NO.	ITEM	UNIT	TOTAL QUANTITY	
	59100100	GEOCOMPOSITE WALL DRAIN	SQ YD	37	37
	60100060	CONCRETE HEADWALLS FOR PIPE DRAINS	EACH	4	4
	60146304	PIPE UNDERDRAINS FOR STRUCTURES 4"	FOOT	123	123
*	63000001	STEEL PLATE BEAM GUARDRAIL, TYPE A, 6 FOOT POSTS	FOOT	213	213
*	63100117	TRAFFIC BARRIER TERMINAL, TYPE 13	EACH	3	3
*	63100167	TRAFFIC BARRIER TERMINAL, TYPE 1 (SPECIAL) TANGENT	EACH	3	3
	63200310	GUARDRAIL REMOVAL	FOOT	430	430
	64200108	SHOULDER RUMBLE STRIPS, 8 INCH	FOOT	904	904
	64300260	IMPACT ATTENUATORS (FULLY REDIRECTIVE, NARROW), TEST LEVEL 3	EACH	1	1
	66700205	PERMANENT SURVEY MARKERS, TYPE I	EACH	1	1
	67000400	ENGINEER'S FIELD OFFICE, TYPE A	CAL MO	6	6
	67100100	MOBILIZATION	L SUM	1	1
	70100405	TRAFFIC CONTROL AND PROTECTION, STANDARD 701321	EACH	1	1
	70100450	TRAFFIC CONTROL AND PROTECTION, STANDARD 701201	L SUM	1	1
	70100460	TRAFFIC CONTROL AND PROTECTION, STANDARD 701306	L SUM	1	1

*SPECIALITY ITEM

MODEL: Default
FILE NAME: c:\pw_work\pwidot\zagarjk\d1008618\66L79-SOQ.dgn

USER NAME = Joseph.Zagar	DESIGNED -	REVISED -
	DRAWN -	REVISED -
	CHECKED -	REVISED -
PLOT DATE = 8/13/2024	DATE -	REVISED -

STATE OF ILLINOIS
DEPARTMENT OF TRANSPORTATION

SUMMARY OF QUANTITIES

SCALE: SHEET OF SHEETS STA. TO STA.

F.A.P. RTE.	SECTION	COUNTY	TOTAL SHEETS	SHEET NO.
673	(112BR)ES	LIVINGSTON	65	7
		CONTRACT NO. 66L79		
	ILLINOIS	FED. AID PROJECT		

REV. 10/7/24 REV. 8/27/24

CODE NO.	ITEM	UNIT	TOTAL QUANTITY	CONSTR. CODE 80% FED 20% STATE BRIDGE 0010 S.N. 053-0194
70100500	TRAFFIC CONTROL AND PROTECTION, STANDARD 701326	L SUM	1	1
70106500	TEMPORARY BRIDGE TRAFFIC SIGNALS	EACH	1	1
70106700	TEMPORARY RUMBLE STRIPS	EACH	12	12
70300100	SHORT TERM PAVEMENT MARKING	FOOT	120	120
70300150	SHORT TERM PAVEMENT MARKING REMOVAL	SQ FT	40	40
70400100	TEMPORARY CONCRETE BARRIER	FOOT	487.5	487.5
70400125	PINNING TEMPORARY CONCRETE BARRIER	EACH	57	57
70400200	RELOCATE TEMPORARY CONCRETE BARRIER	FOOT	438	438
70600251	IMPACT ATTENUATORS, TEMPORARY (NON- REDIRECTIVE, NARROW), TEST LEVEL 3	EACH	2	2
70600352	IMPACT ATTENUATORS, RELOCATE (NON- REDIRECTIVE,NARROW), TEST LEVEL 3	EACH	2	2
* 72400310	REMOVE SIGN PANEL - TYPE 1	SQ FT	12	12
* 72501000	TERMINAL MARKER - DIRECT APPLIED	EACH	3	3
* 78009004	MODIFIED URETHANE PAVEMENT MARKING - LINE 4"	FOOT	2400	2400
* 78009006	MODIFIED URETHANE PAVEMENT MARKING - LINE 6"	FOOT	300	300

*SPECIALITY ITEM

MODEL: Default
FILE NAME: c:\pw_work\pwidot\zagarjk\d1008618\66L79-SOQ.dgn

USER NAME = Joseph.Zagar	DESIGNED -	REVISED -
	DRAWN -	REVISED -
	CHECKED -	REVISED -
PLOT DATE = 8/13/2024	DATE -	REVISED -

STATE OF ILLINOIS
DEPARTMENT OF TRANSPORTATION

SUMMARY OF QUANTITIES

SCALE: SHEET OF SHEETS STA. TO STA.

F.A.P. RTE.	SECTION	COUNTY	TOTAL SHEETS	SHEET NO.
673	(112BR)ES	LIVINGSTON	65	8
		CONTRACT NO. 66L79		
	ILLINOIS	FED. AID PROJECT		

REV. 9/23/24REV. 8/27/24

	CODE NO.	ITEM	UNIT	TOTAL QUANTITY	CONSTR. CODE 80% FED 20% STATE BRIDGE 0010 S.N. 053-0194
*	78100100	RAISED REFLECTIVE PAVEMENT MARKER	EACH	6	6
*	78200005	GUARDRAIL REFLECTORS, TYPE A	EACH	9	9
	78300200	RAISED REFLECTIVE PAVEMENT MARKER REMOVAL	EACH	6	6
	X4020700	AGGREGATE SURFACE COURSE, TYPE B 8"	SQ YD	353	353
	X6350204	LINEAR DELINEATOR PANELS, 4 INCH	EACH	6	6
	X6350206	LINEAR DELINEATOR PANELS, 6 INCH	EACH	4	4
	Z0005216	HOT-MIX ASPHALT STABILIZATION 6" AT STEEL PLATE BEAM GUARD RAIL	SQ YD	56	56
	Z0013798	CONSTRUCTION LAYOUT	L SUM	1	1
	Z0030850	TEMPORARY INFORMATION SIGNING	SQ FT	42	42
	Z0062456	TEMPORARY PAVEMENT	SQ YD	264	264

*SPECIALITY ITEM

MODEL: Default
FILE NAME: c:\pw_work\pwidot\carminsa\d1032499\66L79-SOQ.dgn

USER NAME = stephenie.carmin	DESIGNED -	REVISED -
	DRAWN -	REVISED -
	CHECKED -	REVISED -
PLOT DATE = 8/21/2024	DATE -	REVISED -

STATE OF ILLINOIS
DEPARTMENT OF TRANSPORTATION

SUMMARY OF QUANTITIES

SCALE: | SHEET OF SHEETS | STA. TO STA.

F.A.P. RTE.	SECTION	COUNTY	TOTAL SHEETS	SHEET NO.
673	(112BR)ES	LIVINGSTON	65	9

CONTRACT NO. 66L79

ILLINOIS | FED. AID PROJECT

REV. 10/9/24 REV. 10/7/24 REV. 9/23/24 REV. 8/27/24

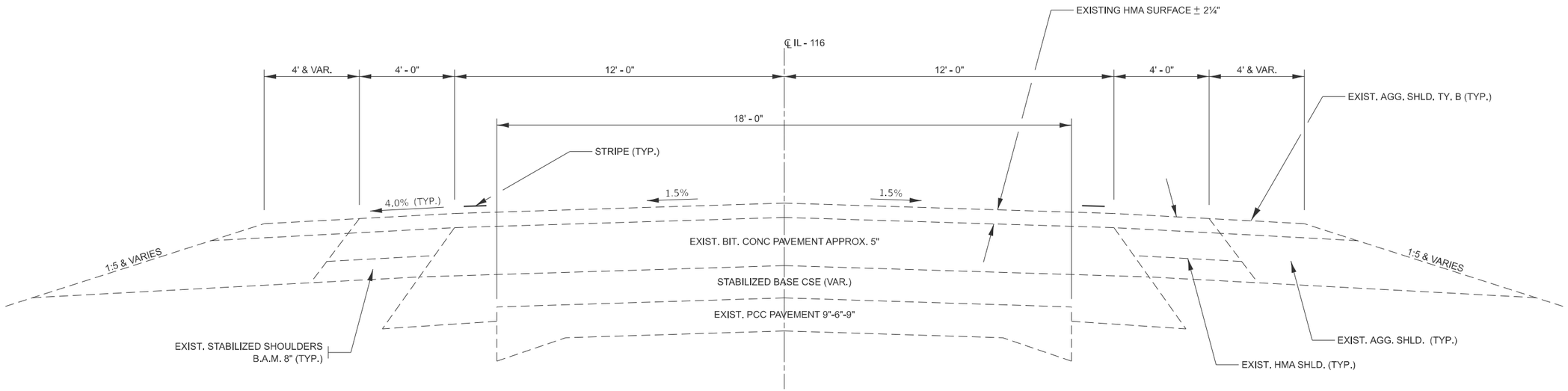

EXISTING TYPICAL SECTION IL-116

STA 567+20 TO STA 573+20

MODEL: Default
FILE NAME: c:\pw_work\pwidot\zagarjk\d1008618\66L79-TYPICAL_SECTIONS.dgn

USER NAME = Joseph.Zagar	DESIGNED -	REVISED -	STATE OF ILLINOIS DEPARTMENT OF TRANSPORTATION
	DRAWN -	REVISED -	
	CHECKED -	REVISED -	
PLOT DATE = 8/16/2024	DATE -	REVISED -	

EXISTING ROADWAY TYPICAL SECTIONS

SCALE: SHEET OF SHEETS STA. TO STA.

F.A.P. RTE.	SECTION	COUNTY	TOTAL SHEETS	SHEET NO.
673	(112BR)ES	LIVINGSTON	65	10
		CONTRACT NO. 66L79		
	ILLINOIS	FED. AID PROJECT		

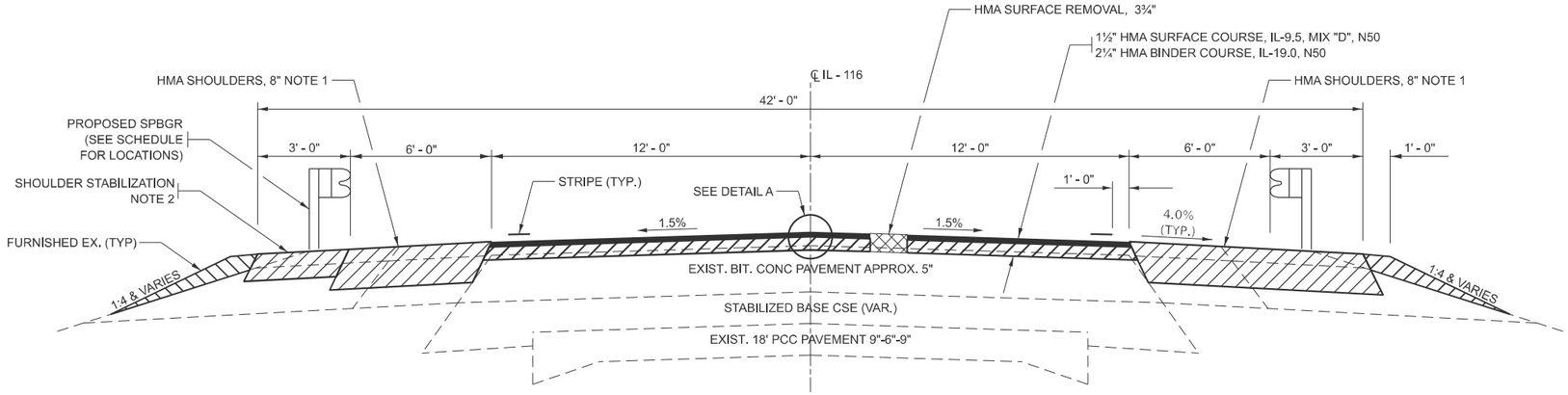

PROPOSED TYPICAL 1

STA 567+20 TO STA 567+62.69
STA 572+00 TO STA 573+20

NOTES

1) HMA SHOULDER 8"
   1½" TOP LIFT - IL 9.5, N50
   2½" MIDDLE LIFT - IL 19.0, N50
   4" BOTTOM LIFT - IL 19.0, N50

2) SHOULDER STABILIZATION
   2" TOP LIFT - IL 9.5, N50
   4" BOTTOM LIFT - IL 19.0, N50

3) SEE DETAIL B FOR LOCATIONS WHERE GUARDRAIL IS NOT PRESENT

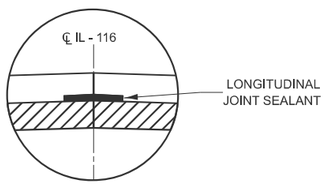

DETAIL A

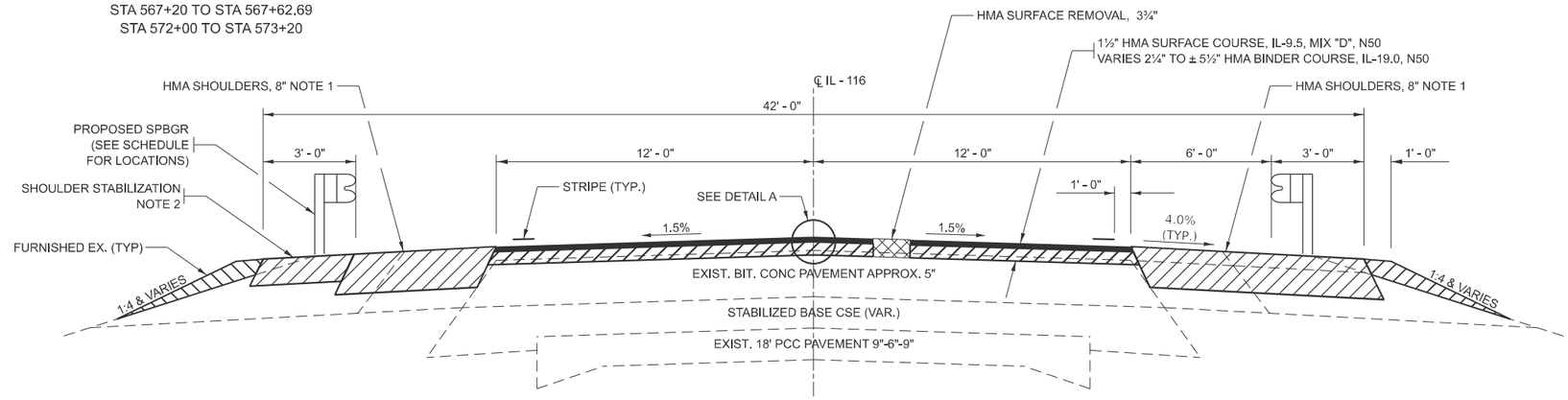

PROPOSED TYPICAL 2

STA 567+62.69 TO STA 568+93.63

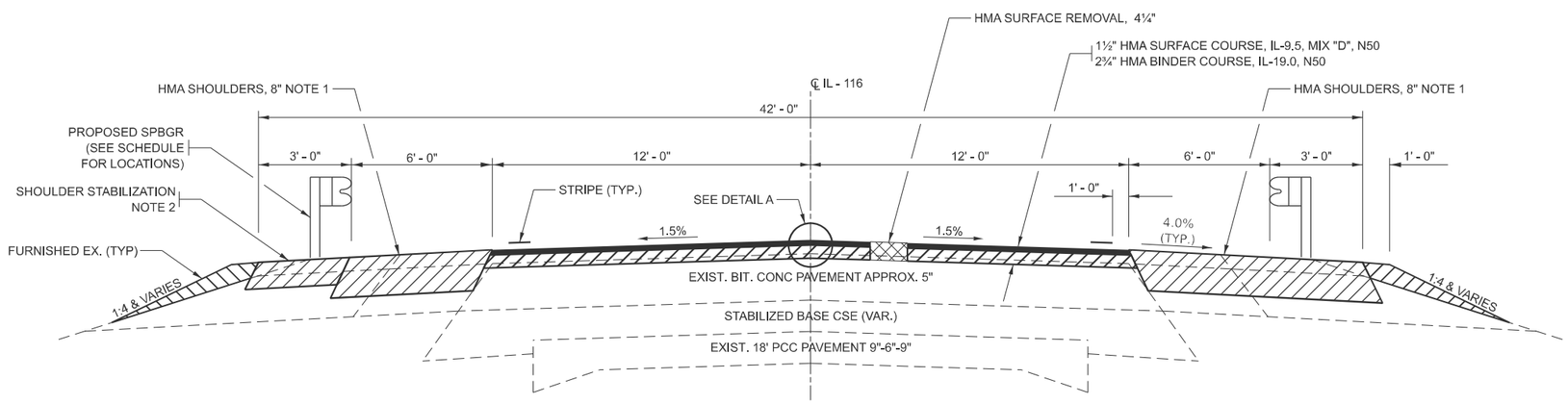

PROPOSED TYPICAL 3

STA 570+42.38 TO STA 572+00

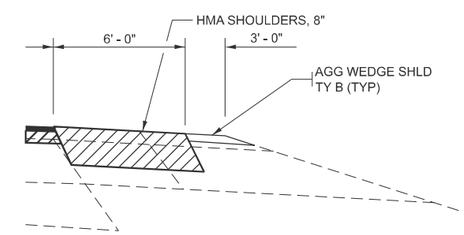

DETAIL B

MODEL: Default
FILE NAME: c:\pw_work\pwidot\carminsa\d1032499\66L79-TYPICAL_SECTIONS.dgn

USER NAME = stephenle.carmin	DESIGNED -	REVISED -	
	DRAWN -	REVISED -	
	CHECKED -	REVISED -	
PLOT DATE = 8/21/2024	DATE -	REVISED -	

STATE OF ILLINOIS
DEPARTMENT OF TRANSPORTATION

PROPOSED ROADWAY TYPICAL SECTIONS

SCALE: | SHEET OF SHEETS | STA. TO STA.

F.A.P. RTE.	SECTION	COUNTY	TOTAL SHEETS	SHEET NO.
673	(112BR)ES	LIVINGSTON	65	11
		CONTRACT NO. 66L79		
	ILLINOIS	FED. AID PROJECT		

MAINLINE SCHEDULE

LOCATION				LENGTH	MAINLINE WIDTH	AREA	BIT MATLS TACK CT	LONG JOINT SEALANT	MIX CR JTS & FLANGEWYS	HMA BC HM N50	TEMPORARY RAMP	HMA BC IL-19.0 N50	HMA SC IL-9.5 D N50	HMA SURF REM 3 3/4	HMA SURF REM 4 1/4	PAVED SHOULDER REM	AGG WEDGE SHLD TYPE B	HMA SHOULDERS 8
STA	TO	STA	DESCRIPTION	FOOT	FOOT	SQ YD	POUND	FOOT	TON	TON	SQ YD	TON	TON	SQ YD	SQ YD	SQ YD	TON	SQ YD
567+20	TO	567+62.69		43	24	115	77	43	0.03	0.1	33	15	10	115		39	1	65
567+62.69	TO	568+77		114	24	304	205	114	0.09	0.2		82	26	304		127	3	194
568+77	TO	568+93.63		17	24			17			33							
568+93.63	TO	570+42.38	SN 038-0194 OMISSION	149														
570+42.38	TO	570+59		17	24			17			38							
570+59	TO	572+00		141	24	376	254	141	0.11	0.2		58	32		376	157	1	232
572+00	TO	573+20		120	24	320	216	120	0.10	0.2	33	45	27	320		133	6	160
TOTAL							752	452	0.33	0.7	137	200	95	739	376	456	11	651

PRE-STAGE SCHEDULE

LOCATION			LENGTH	WIDTH	HMA SC IL-9.5 D N50	HMA SURF REM 2	PAVED SHLD REMOVAL	TEMP SHOULDERS
STA	TO	STA	FOOT	FOOT	TON	SQ YD	SQ YD	SQ YD
567+60	TO	569+42	182	6			81	121
569+15	TO	569+38	23	12	3	31		
569+96	TO	570+29	33	12	5	44		
570+07	TO	572+20	213	6			96	143
TOTAL					8	75	177	264

TRAFFIC CONTROL & PROTECTION SCHEDULE

LOCATION	TRAF CONT-PROT 701321	TEMP BR TRAF SIGNALS	TEMP CONC BARRIER	REL TEMP CONCRETE BARRIER	PIN TEMP CONCRETE BARRIER	IMP ATTEN TEMP NRN TL3	IMP ATTEN REL NRN TL3	TEMP RUMBLE STRIPS
STAGE	EACH	EACH	FOOT	FOOT	EACH	EACH	EACH	EACH
STAGE 1	0.5	0.5	487.5		57	2		6
STAGE 2	0.5	0.5		437.5			2	6
TOTAL	1	1	487.5	437.5	57	2	2	12

CONNECTOR PAVEMENT

LOCATION			LENGTH	WIDTH	SUB GRAN MAT B 12	PVT CON HMA BR APP SL	PAVEMENT REM	PAVED SHLD REM
STA	TO	STA	FOOT	FOOT	SQ YD	SQ YD	SQ YD	SQ YD
568+77	TO	568+93.63	17	24	66	66	44	20
570+42.38	TO	570+59	17	24	66	66	44	17
TOTAL					132	132	88	37

PAVEMENT MARKING SCHEDULE

LOCATION			LENGTH	SHOULDER RUMBLE STRIP 8 IN	SHORT TERM PMK		MOD URETH PM		RAISED REFLECTIVE PAVEMENT MARKERS	
					INSTALL (2 APP)	REMOVE (2 APP)	4" (2 APP)	6" (2 APP)	INSTALL	REMOVAL
STA	TO	STA	FT	FOOT	FT	SQ FT	FT	FT	EACH	EACH
567+20	TO	573+20	600	904	120	40	2400	300	6	6
GRAND TOTAL				904	120	40	2400	300	6	6

GUARDRAIL SCHEDULE

LOCATION	QUAD	* LENGTH OF NEED	SPBGR TY A 6FT POSTS	TRAFFIC BARRIER TERMINAL TYPE 13	TRAFFIC BARRIER TERMINAL TYPE 1 TANGENT (SPECIAL)	GRDRAIL REM	IMP ATTEN FRD NAR TL3	TERMINAL MARKER DA	GRDRAIL REFL TYPE A	LINEAR DELIN PANELS 4" WHITE	LINEAR DELIN PANELS 6" WHITE	HMA STAB 6" AT SPBGR
STATION TO STATION		FT	FOOT	EACH	EACH	FOOT	EACH	EACH	EACH	EACH	EACH	SQ YD
PROPOSED GUARDRAIL STATIONS												
567+43 TO 569+05 RT	SW	148	75	1	1	100		1	2	2		
568+93 TO 569+48 LT	NW					55	1					
569+11 TO 570+25 RT	BR								1		2	
569+26 TO 570+10 LT	BR								2		2	
570+16 TO 571+66 RT	SE	135	62.5	1	1	100		1	2	2		
570+31 TO 571+93 LT	NE	148	75	1	1	175		1	2	2		56
TOTAL			212.5	3	3	430	1	3	9	6	4	56

* THE LENGTH OF NEED IS MEASURED FROM END OF IL-OH RAILING.

GRADING & SHAPING

STATION	GRADE & SHAPE DITCH	FLOW DIRECTION
STA TO STA	FOOT	
567+20 LT TO 567+31 LT	11	
FIELD ENTRANCE		
567+97 LT TO 568+00 LT	3	EAST
568+00 LT TO 568+29 LT	29	EAST
FIELD ENTRANCE		
568+98 LT TO 569+17 LT	19	EAST
BRIDGE		
570+63 LT TO 573+20 LT	257	WEST
SUB TOTAL LEFT SIDE	319	
567+20 RT TO 568+78 RT	158	EAST
BRIDGE		
570+11 RT TO 573+20 RT	309	WEST
SUB TOTAL RIGHT SIDE	467	
TOTAL	786	

SIGN SCHEDULE

LOCATION	NOTES	REMOVE SIGN PANEL TYP 1
STA		SQ YD
568+40 RT	WEIGHT LIMIT	6
571+70 LT	WEIGHT LIMIT	6
TOTAL		12

TEMPORARY EROSION CONTROL SCHEDULE

LOCATION	TEMPORARY DITCH CHECKS	INLET AND PIPE PROTECTION	PERIMETER EROSION BARRIER
STA	FOOT	EACH	FOOT
567+20 LT TO 567+47 LT			27
567+20 RT TO 569+15 RT			195
567+30 LT	6		
567+41 LT		1	
567+80 RT	6		
567+82 LT TO 568+45 LT			63
568+00 RT	6		
568+10 LT	6		
568+25 RT	6		
568+35 LT		1	
568+50 RT	6		
568+75 RT	6		
568+95 LT TO 569+61 LT			66
569+00 RT	6		
569+15 RT	6		
569+20 LT	6		
569+40 LT	6		
569+60 LT	6		
BRIDGE			
569+80 RT TO 573+20 RT			340
569+80 RT	6		
569+95 RT	6		
570+10 RT	6		
570+26 LT TO 573+20 LT			294
570+26 LT	6		
570+44 LT	6		
570+62 LT	6		
570+30 RT	6		
570+80 LT	6		
571+30 RT	6		
571+80 LT	6		
572+30 RT	6		
572+80 LT	6		
TOTAL	144	2	985

EARTHWORK SCHEDULE

LOCATION			NOTES	EARTH EXCAVATION	EARTH EXCAVATION ADJUSTED FOR SHRINKAGE	EMBANKMENT	EARTHWORK BALANCE WASTE (+) OR SHORTAGE (-)	FURNISHED EXCAVATION
STA	TO	STA		CU. YD.	CU. YD.	CU. YD.	CU. YD.	CU. YD.
567+20	TO	568+93.63	PRE-STAGE CONSTRUCTION OF TEMPORARY SHOULDERS.	9.0	6.8		6.8	-6.8
567+20	TO	568+93.63	HMA SHOULDER 8"	18.5	13.9	30.6	-16.7	16.7
567+20	TO	568+93.63	FIELD ENTRANCE AT STA 567+62.69	63.1	47.3	49.6	-2.3	2.3
567+20	TO	568+93.63	FIELD ENTRANCE AT STA 568+67	50.1	37.6	136.1	-98.5	98.5
567+20	TO	568+93.63	GRADING AND SHAPING	35.7	26.8		26.8	-26.8
567+21	TO	568+94.63	CONNECTOR PAVEMENT	2.9	2.2		2.2	-2.2
568+41	TO	573+19.00	CONNECTOR PAVEMENT	2.9	2.2		2.2	-2.2
568+42	TO	573+20.00	PRE-STAGE CONSTRUCTION OF TEMPORARY SHOULDERS.	10.6	8.0		8.0	-8.0
568+42	TO	573+20.00	HMA SHOULDER 8"	22.7	17.0	36.5	-19.5	19.5
568+42	TO	573+20.00	HMA STABILIZATION	9.3	7.0		7.0	-7.0
568+42	TO	573+20.00	GRADING AND SHAPING	34.9	26.2		26.2	-26.2
TOTAL				260	195	253	-58	58

NOTE: SHRINKAGE FACTOR 25%

FIELD ENTRANCE SCHEDULE

LOCATION		NOTES	AGG SURF CSE TY B 8"
STA			SQ YD
567+62.69	LT	FIELD ENTRANCE	124
568+67	LT	FIELD ENTRANCE	229
TOTAL			353

DRAINAGE SCHEDULE

LOCATION			DESCRIPTION OF WORK	CHANNEL EXCAVATION	STONE RIPRAP CL A4	FILTER FABRIC	PAVED DITCH REMOVAL	PIPE CULVERT REMOVAL	END SECTIONS 18	PIPE CULVERT CL D 1 18	CONC HDWL FOR P DRAIN
STA	OS	RT/LT		CU YD	SQ YD	SQ YD	FOOT	FOOT	EACH	EACH	EACH
568+97	43	RT	REMOVE PAVED DITCH AND REPLACE WITH RR4		31	31	35				
569+30	50	LT	REMOVE PAVED DITCH AND REPLACE WITH RR4		54	54	61				
569+95	46	RT	REMOVE PAVED DITCH AND REPLACE WITH RR4		25	25	28				
570+45	57	LT	REMOVE PAVED DITCH AND REPLACE WITH RR4		31	31	35				
569+22	30	RT	INSTALL CONCRETE HEADWALL FOR PIPE DRAIN								1
569+33	30	LT	INSTALL CONCRETE HEADWALL FOR PIPE DRAIN								1
570+02	30	RT	INSTALL CONCRETE HEADWALL FOR PIPE DRAIN								1
570+12	30	LT	INSTALL CONCRETE HEADWALL FOR PIPE DRAIN								1
567+62.69	44	LT	REMOVE EXISTING CMP CULVERT AND END SECTIONS					36			
567+62.69	44	LT	INSTALLING CMP CULVERT AND END SECTIONS. (E) U.S. 652.87 ELEV., (W) D.S. 652.43 ELEV.						2	44	
568+67	47	LT	INSTALLING CMP CULVERT AND END SECTIONS. (E) U.S. 651.51 ELEV., (W) D.S. 650.91 ELEV						2	64	
568+74	47	LT	REMOVE EXISTING CMP CULVERT AND END SECTIONS					32			
569+68	43	RT/LT	CHANNEL EXCAVATION AS SHOW IN STRUCTURE PLANS	543							
TOTAL				543	141	141	159	68	4	108	4

SEEDING SCHEDULE

LOCATION STA		TO	STA		NOTES	LENGTH	WIDTH	AREA	SEEDING CL 2A	NITRO FERT NUTR	PHOSP FERT NUTR	POT FERT NUTR	EROSION CONTROL BLANKET	TEMP. ERO. CNTRL. SEED (2 APPL)	TEMP. ERO. CNTRL. BLANKET (2 APPL)
						FOOT	FOOT	SQ YD	ACRE	LB	LB	LB	SQ YD	POUND	SQ YD
567+20	LT	TO	567+31	LT	DITCH GRADING	11	6	7	0.002	0.18	0.18	0.18	7	0.40	14
567+97	LT	TO	568+00	LT	DITCH GRADING	3	6	2	0.001	0.09	0.09	0.09	2	0.20	4
568+00	LT	TO	568+29	LT	DITCH GRADING	29	6	19	0.004	0.36	0.36	0.36	19	0.80	38
570+59	LT	TO	573+20	LT	DITCH GRADING	261	6	174	0.036	3.24	3.24	3.24	174	7.20	348
567+20	RT	TO	568+78	RT	DITCH GRADING	158	10	176	0.037	3.33	3.33	3.33	176	7.40	352
570+45	RT	TO	573+20	RT	DITCH GRADING	275	10	306	0.064	5.76	5.76	5.76	306	12.80	612
568+63				LT	FIELD ENTRANCE SLOPES			182	0.038	3.42	3.42	3.42	182	7.60	364
568+67				LT	FIELD ENTRANCE SLOPES			213	0.045	4.05	4.05	4.05	213	9.00	426
567+20	LT	TO	567+31	LT	FORESLOPE	11	5	6	0.002	0.18	0.18	0.18	6	0.40	12
567+97	LT	TO	568+29	LT	FORESLOPE	32	6	21	0.005	0.45	0.45	0.45	21	1.00	42
570+59	LT	TO	573+20	LT	FORESLOPE	261	7	203	0.042	3.78	3.78	3.78	203	8.40	406
568+93	LT	TO	569+21	LT	FORESLOPE			64	0.014	1.26	1.26	1.26	64	2.80	128
570+30	LT	TO	570+59	LT	FORESLOPE			104	0.022	1.98	1.98	1.98	104	4.40	208
568+78	RT	TO	569+06	RT	FORESLOPE			68	0.015	1.35	1.35	1.35	68	3.00	136
570+14	RT	TO	570+45	RT	FORESLOPE			83	0.018	1.62	1.62	1.62	83	3.60	166
567+20	RT	TO	568+78	RT	FORESLOPE	158	2	35	0.008	0.72	0.72	0.72	35	1.60	70
570+45	RT	TO	573+20	RT	FORESLOPE	275	2	61	0.013	1.17	1.17	1.17	61	2.60	122
TOTAL									0.37	32.94	32.94	32.94	1724	73	3448

PERMANENT SURVEY MARKER SCHEDULE

MONUMENT NUMBER	DESCRIPTION	APPROXIMATE LOCATION	EXISTING MONUMENT TYPE	PROPOSED MONUMENT TYPE	MONUMENT RECORD TO BE RECORDED	RESPONSIBILITY
116489	N QTR CORNER SECTION 25, T27N, R3E, 3RD PM	2.2' LT. STA 568+61.03	MAG SPIKE	TYPE 1	YES	1

UNKNOWN MONUMENTS SET BY OTHERS MAY EXIST. IF FOUND, R.E. WILL DIRECT PLATS AND PLANS TO TO GPS ANY MONUMENT SUBJECT TO DESTRUCTION FROM THE BRIDGE REPLACEMENT WORK FOR THE PURPOSE OF RESETTING IT AFTER JOB COMPLETION.

R.E. WILL DIRECT PLATS AND PLANS TO SEARCH FOR ADDITIONAL MONUMENTS IF THE CONSTRUCTION LIMITS ARE EXPANDED DURING CONSTRUCTION.

UPON PAVING COMPLETION, R.E. WILL DIRECT PLATS AND PLANS PERSONNEL TO STAKE THE LOCATION FOR TYPE 1 MONUMENT CORING.

PLATS AND PLANS WILL PREPARE AND RECORD THE REQUIRED MONUMENT RECORD.

NOTE: FOR BIDDING PURPOSES, NO CONTRACTED LAND SURVEYING SERVICES WILL BE REQUIRED FOR SETTING THE LISTED PERMANENT SURVEY MARKERS.

RESPONSIBILITY:

1) RESIDENT TO RE-ESTABLISH MONUMENT (PAY ITEM REQUIRED. PERMANENT SURVEY MARKER, TYPE 1)
2) PLATS AND PLANS TO RE-ESTABLISH MONUMENT

PI STA 564+37.96 (RT 116)

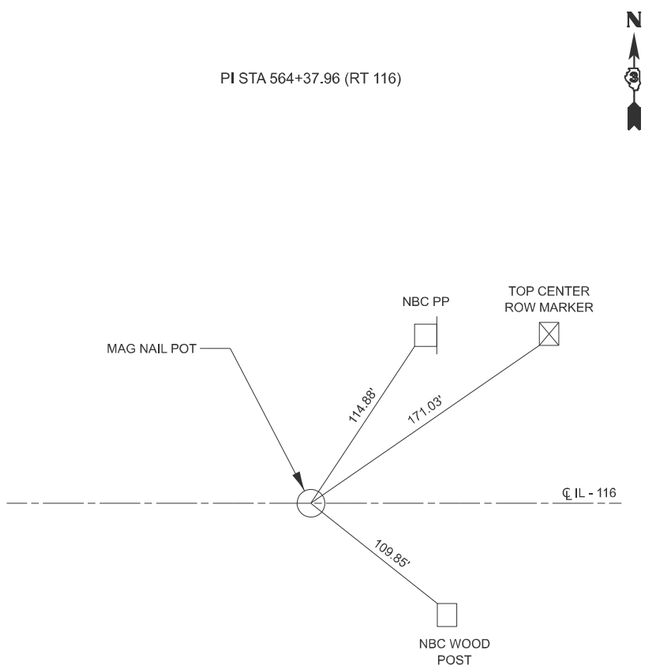

CP 1 STA 568+98.71 27.27' LT (RT 116)

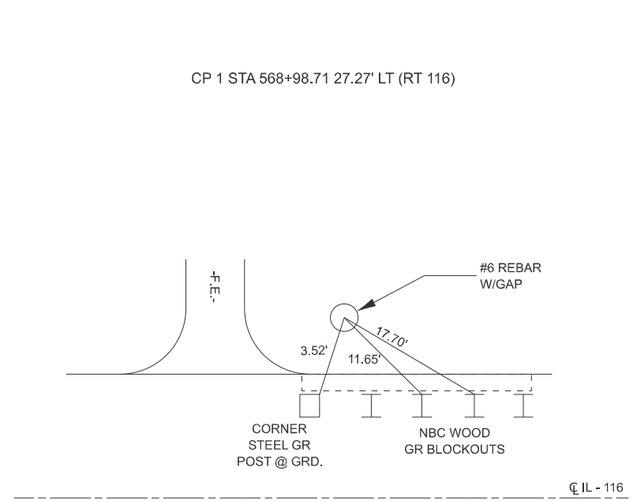

POT STA 569+68.00 (RT 116)
℄ SN 053-0062

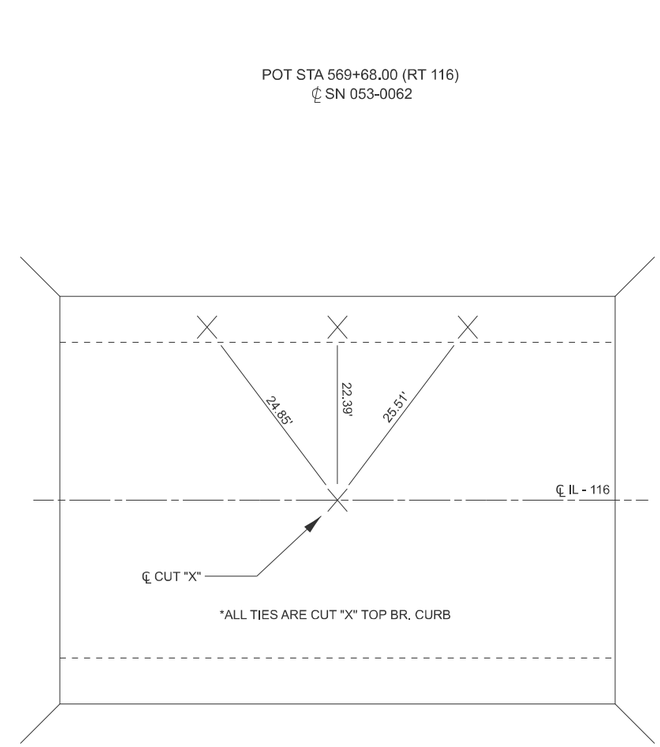

MODEL: Default
FILE NAME: c:\pw_work\pwidot\zagarjk\d1008618\D366L79-TIE POINTS.dgn

USER NAME = Joseph.Zagar	DESIGNED -	REVISED -	
	DRAWN -	REVISED -	
	CHECKED -	REVISED -	
PLOT DATE = 6/14/2024	DATE -	REVISED -	

STATE OF ILLINOIS
DEPARTMENT OF TRANSPORTATION

TIE POINTS

SCALE: SHEET OF SHEETS STA. TO STA.

F.A.P RTE.	SECTION	COUNTY	TOTAL SHEETS	SHEET NO.
673	(112BR)ES	LIVINGSTON	65	16
		CONTRACT NO. 66L79		
		ILLINOIS	FED. AID PROJECT	

POT STA 846+42.04 (IL 116) = STA 20+00.00 (TR 406)
CP 116522 - STA 846+50.83, 43.91' RT

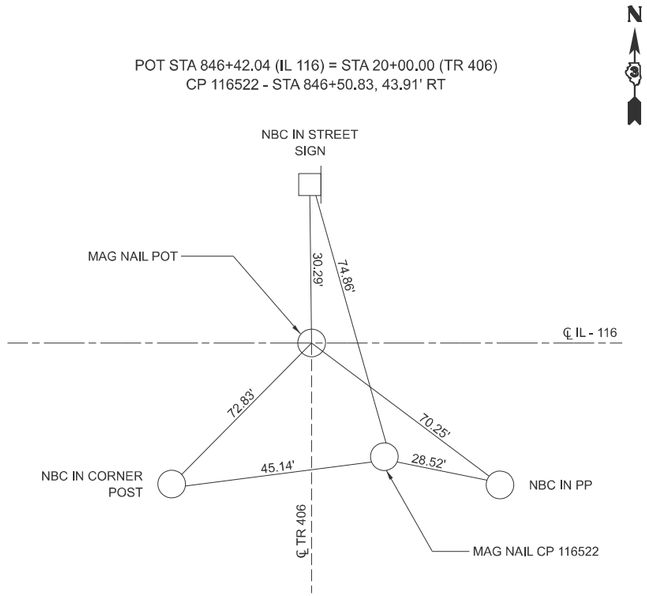

PI STA 848+00.02 (IL 116)

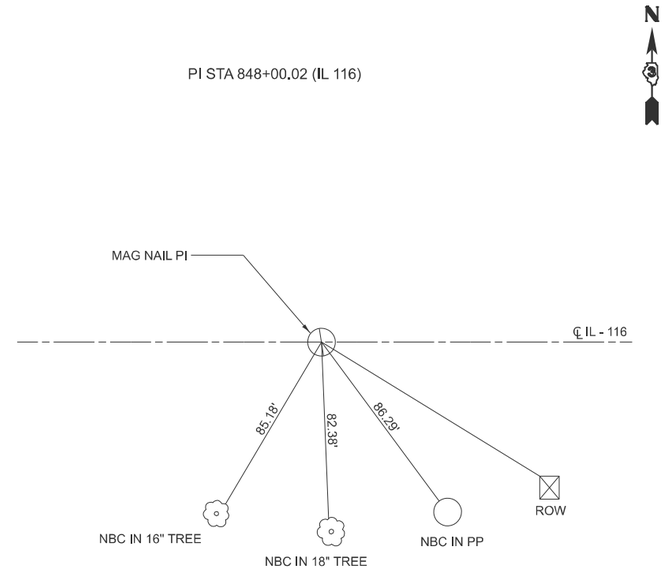

℄ BRIDGE SN 053-0065
STA 852+21.85 (IL 116)

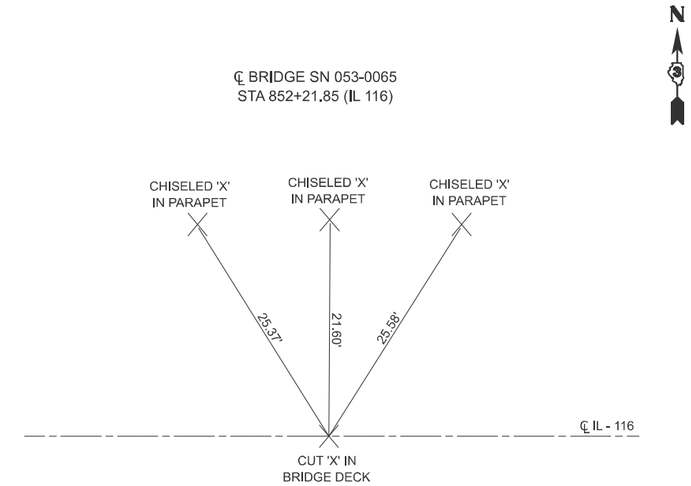

POT STA 854+84.44 (IL 116) = STA 30+00.00 (TR 74)
CP 116520 - 854+47.64 53.81' RT

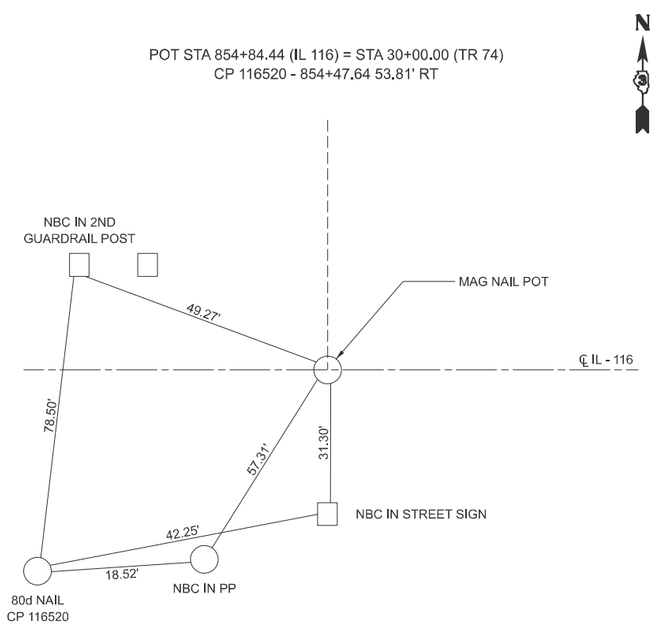

POT 857+00.02 (IL 116)

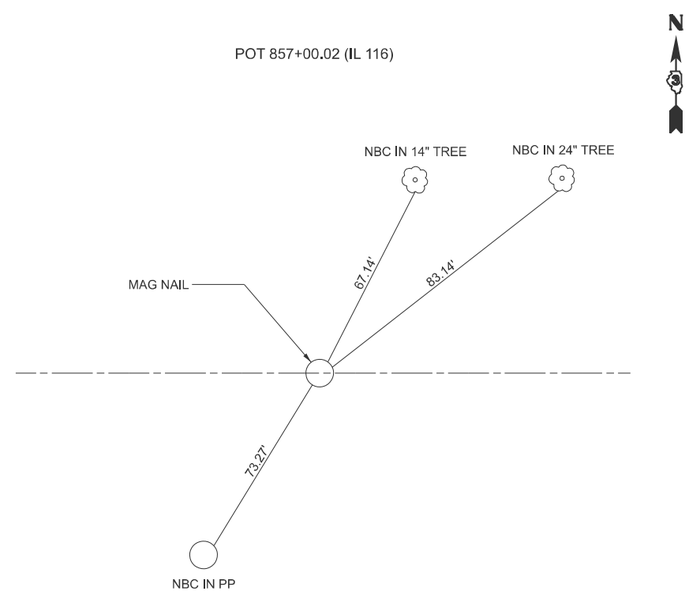

STA 31+00.00 (TR 74)

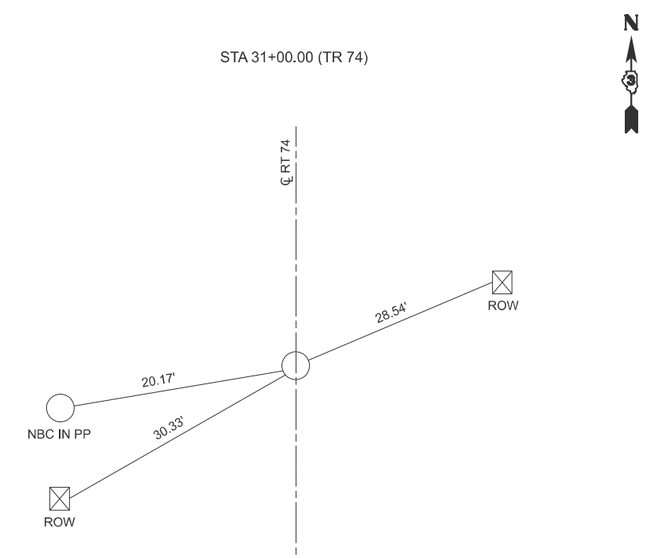

MODEL: Default
FILE NAME: c:\pw_work\pwidot\zagarjk\d1008618\D386L79-TIE POINTS.dgn

USER NAME = Joseph.Zagar	DESIGNED -	REVISED -	
	DRAWN -	REVISED -	
	CHECKED -	REVISED -	
PLOT DATE = 6/14/2024	DATE -	REVISED -	

STATE OF ILLINOIS
DEPARTMENT OF TRANSPORTATION

TIE POINTS

SCALE: SHEET OF SHEETS STA. TO STA.

F.A.P RTE.	SECTION	COUNTY	TOTAL SHEETS	SHEET NO.
673	(112BR)ES	LIVINGSTON	65	17
		CONTRACT NO. 66L79		
	ILLINOIS	FED. AID PROJECT		

SW CORNER SEC 17 T30N-R4E
STA 435+91

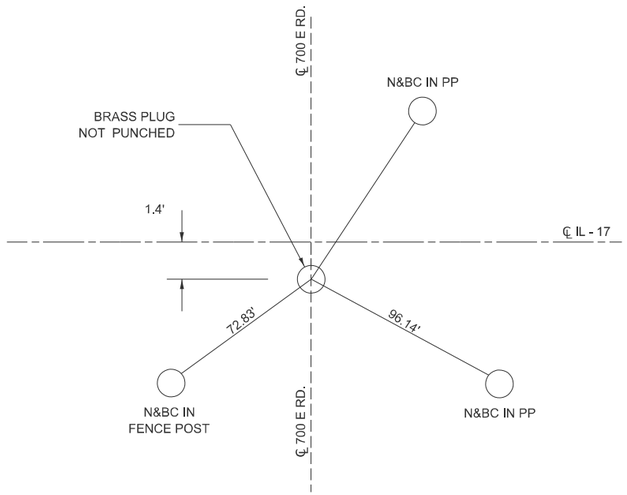

SE CORNER SEC 17 T30N-R4E
STA 488+77.30

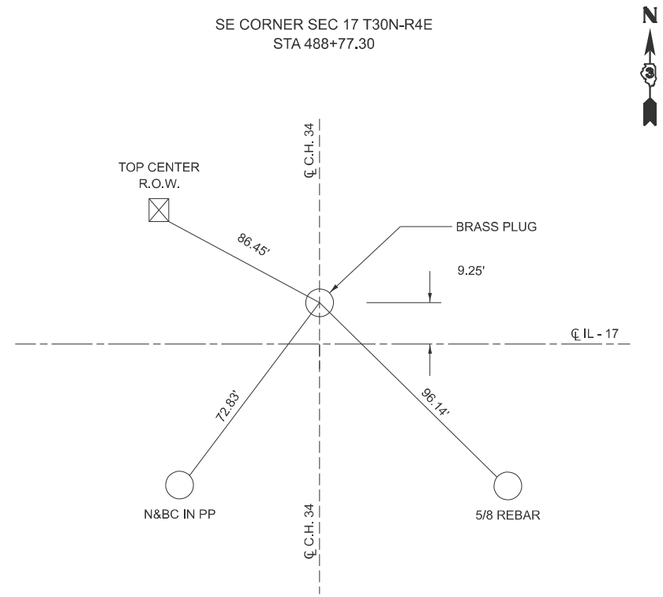

P.I. STA 489+00 (IL 17)

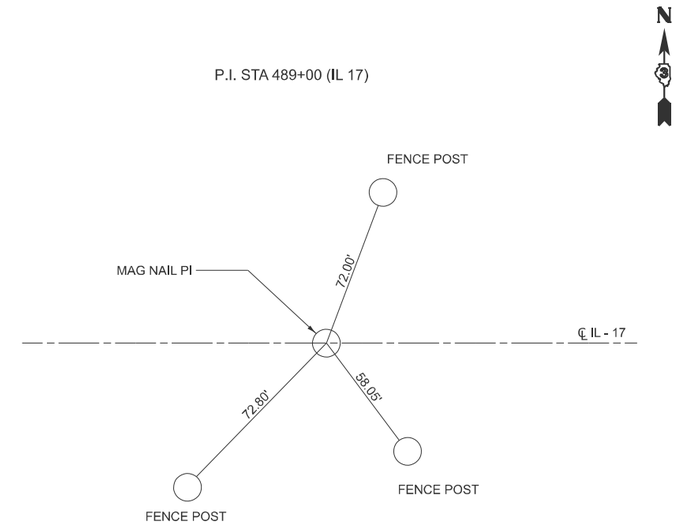

P.I. STA 517+00 (IL 17)

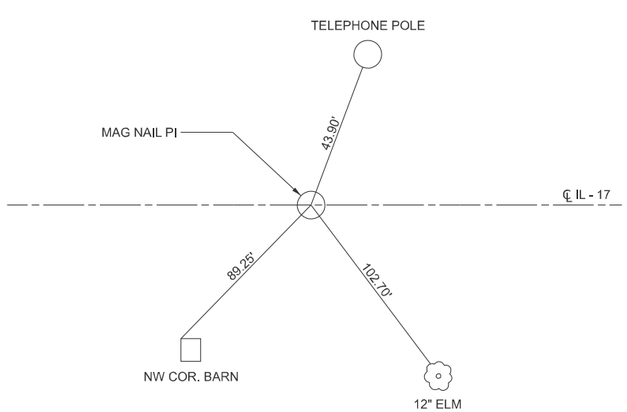

P.I. STA 558+00 (IL 17)

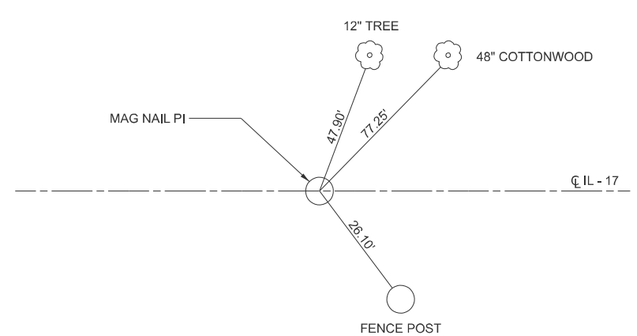

SW CORNER SEC 14 T30N-R4E
STA ±593+83

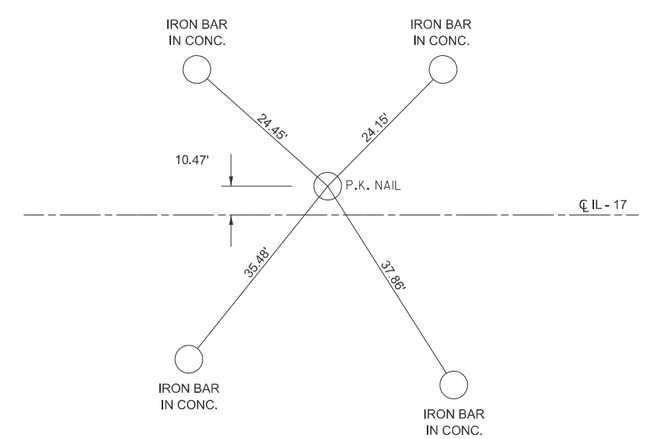

MODEL: Default
FILE NAME: c:\pw_work\pwidot\zagarjk\d1008618\D386L79-TIE POINTS.dgn

USER NAME = Joseph.Zagar	DESIGNED -	REVISED -
	DRAWN -	REVISED -
	CHECKED -	REVISED -
PLOT DATE = 6/14/2024	DATE -	REVISED -

STATE OF ILLINOIS
DEPARTMENT OF TRANSPORTATION

TIE POINTS

SCALE: | SHEET OF SHEETS | STA. TO STA.

F.A.P RTE.	SECTION	COUNTY	TOTAL SHEETS	SHEET NO.
673	(112BR)ES	LIVINGSTON	65	18

CONTRACT NO. 66L79

ILLINOIS | FED. AID PROJECT

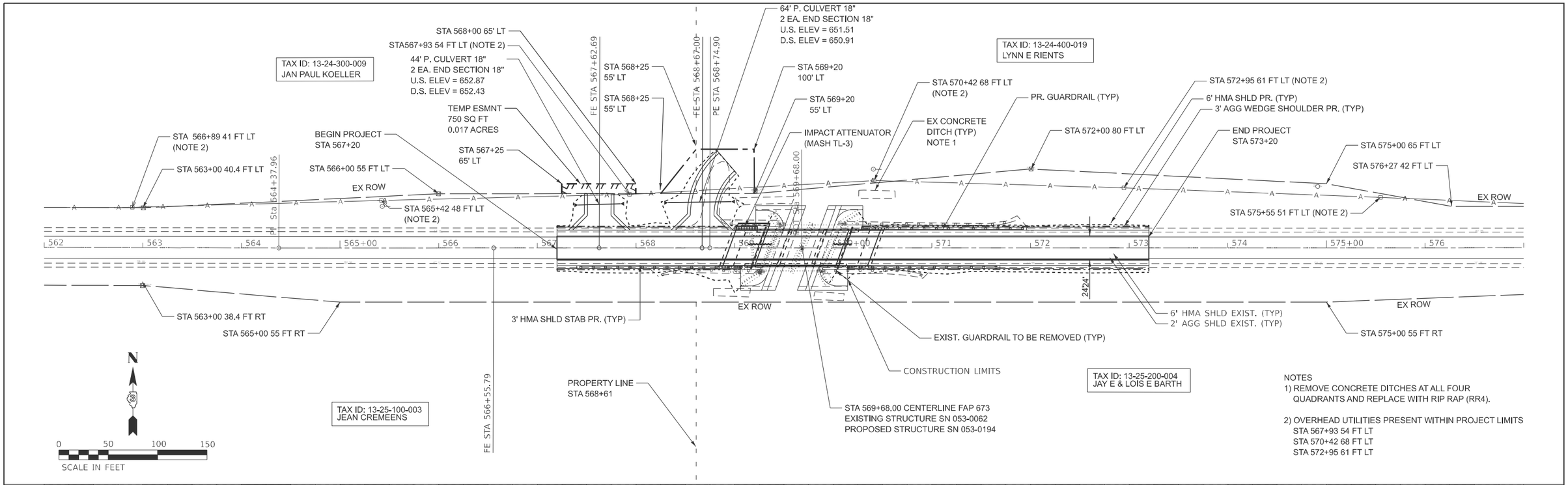

USER NAME = Joseph.Zagar	DESIGNED -	REVISED -	
	DRAWN -	REVISED -	
PLOT SCALE = $SCALE$	CHECKED -	REVISED -	
PLOT DATE = 8/20/2024	DATE -	REVISED -	

STATE OF ILLINOIS
DEPARTMENT OF TRANSPORTATION

IL 116
PRELIMINARY PLAN AND PROFILE

SCALE: SHEET OF SHEETS STA. TO STA.

F.A.P. RTE.	SECTION	COUNTY	TOTAL SHEETS	SHEET NO.
673	(112BR)ES	LIVINGSTON	65	19
		CONTRACT NO. 66L79		
		ILLINOIS	FED. AID PROJECT	

NOTES:

1. MATCH TO RAISED BRIDGE JOINT ACROSS THE LANE AND SHOULDER.

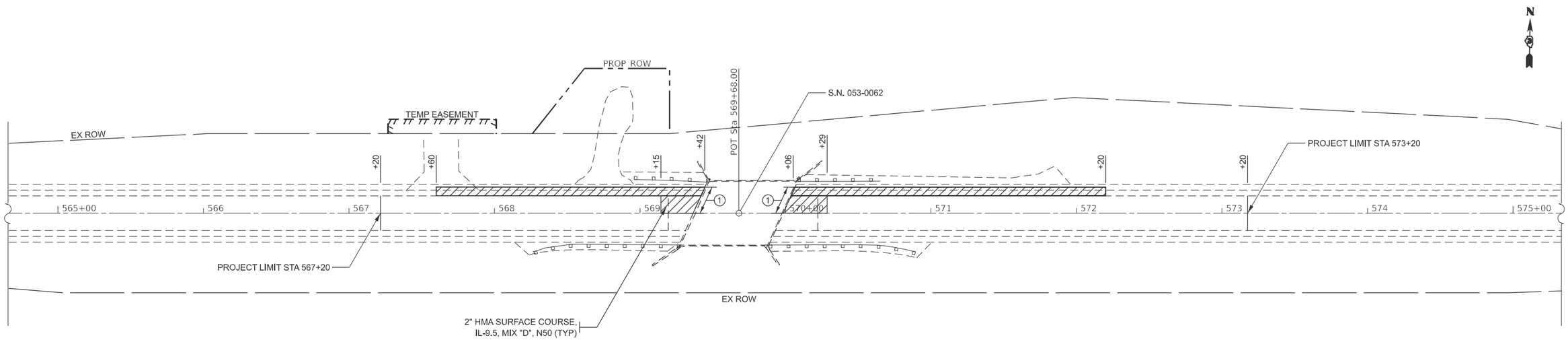

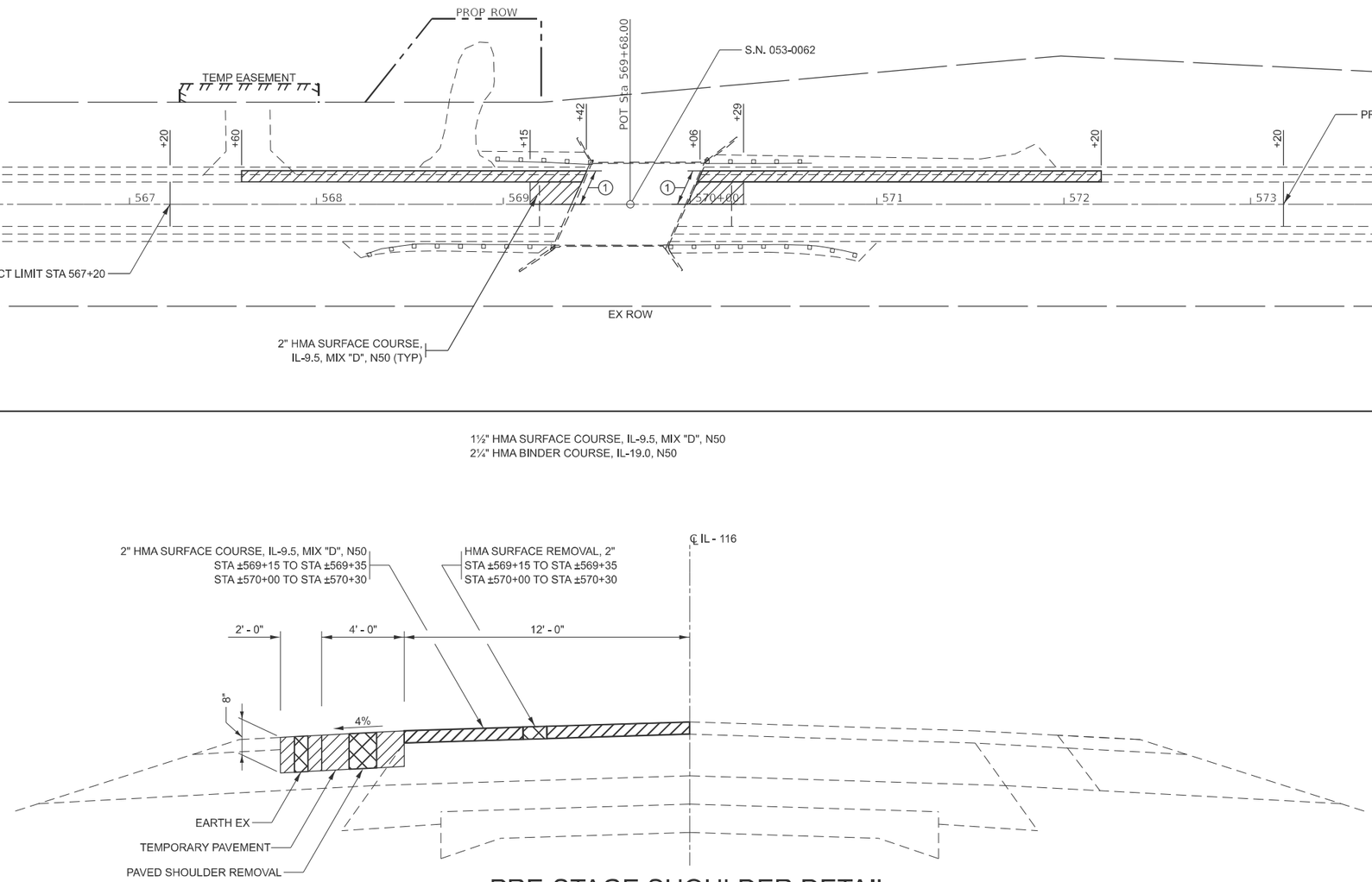

PRE-STAGE SHOULDER DETAIL

STA 567+20 TO STA 569+42 LT
STA 570+07 TO STA 573+20 LT

NOT TO SCALE

MODEL: Default
FILE NAME: c:\pw_work\pwidot\carminsa\d1032499\66L79-TRAFFIC CONTROL & PROTECTION.dgn

USER NAME = stephenie.carmin	DESIGNED -	REVISED -	STATE OF ILLINOIS DEPARTMENT OF TRANSPORTATION
	DRAWN -	REVISED -	
	CHECKED -	REVISED -	
PLOT DATE = 8/21/2024	DATE -	REVISED -	

PRE-STAGE SHOULDER DETAILS

SCALE: SHEET OF SHEETS STA. TO STA.

F.A.P RTE.	SECTION	COUNTY	TOTAL SHEETS	SHEET NO.
673	(112BR)BR	LIVINGSTON	65	20

CONTRACT NO. 66L79

ILLINOIS FED. AID PROJECT

NOTES:
• THIS DOCUMENT IS TO BE SUPPLEMENTAL TO AND, NOT A REPLACEMENT OF STANDARD 701321.

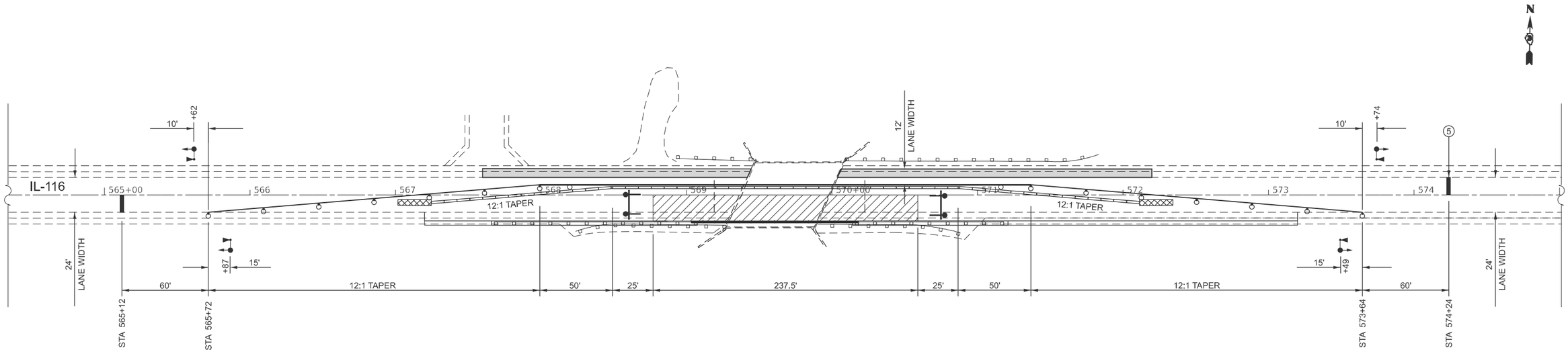

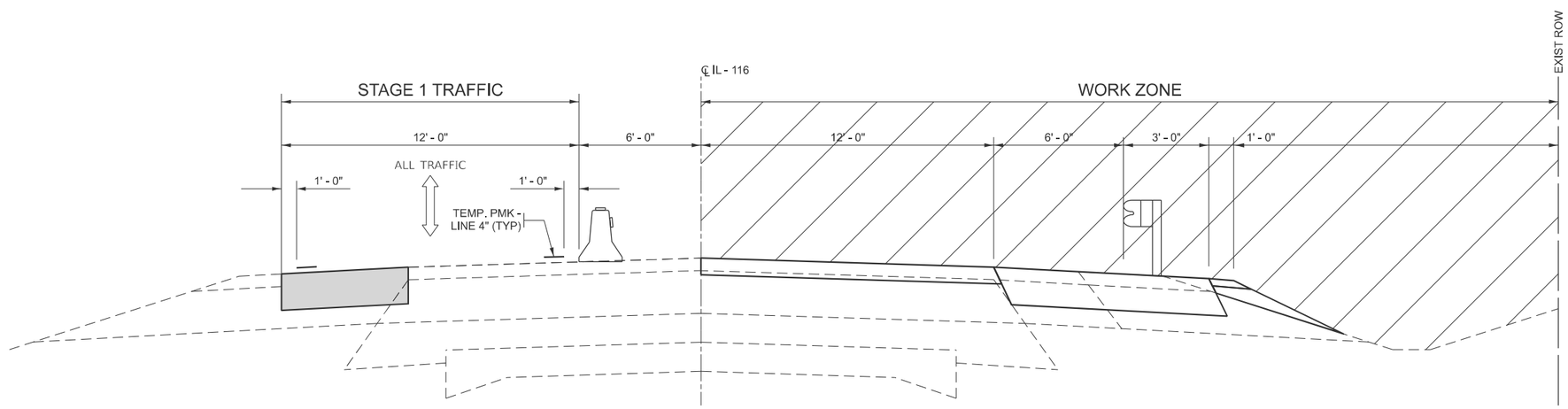

STAGE 1

STA 567+20 TO STA 573+20

NOT TO SCALE

LEGEND

- TRAFFIC CONTROL DRUM
- TRAFFIC CONTROL DRUM WITH STEADY BURNING BI-DRECTIONAL LIGHT
- TYPE III BARRICADES WITH FLASHING LIGHTS.
- TRAFFIC SIGNAL
- MICROWAVE SENSOR
- TEMPORARY CONCRETE BARRIER
- TEMPORARY IMPACT ATTENUATOR (NON-REDIRECTIVE, NARROW) TEST LEVEL 3
- WORKZONE
- WORK COMPLETED IN PREVIOUS STAGE

MODEL: Default
FILE NAME: c:\pw_work\pwidot\zagarjk\d1008618\66L79-TRAFFIC_CONTROL_&_PROTECTION.dgn

USER NAME = Joseph.Zagar	DESIGNED -	REVISED -	
	DRAWN -	REVISED -	
	CHECKED -	REVISED -	
PLOT DATE = 8/12/2024	DATE -	REVISED -	

STATE OF ILLINOIS
DEPARTMENT OF TRANSPORTATION

STAGE 1 TRAFFIC CONTROL & PROTECTION

SCALE: | SHEET OF SHEETS | STA. TO STA.

F.A.P RTE.	SECTION	COUNTY	TOTAL SHEETS	SHEET NO.
673	(112BR)BR	LIVINGSTON	65	21

CONTRACT NO. 66L79

ILLINOIS | FED. AID PROJECT

NOTES:
• THIS DOCUMENT IS TO BE SUPPLEMENTAL TO AND, NOT A REPLACEMENT OF STANDARD 701321.

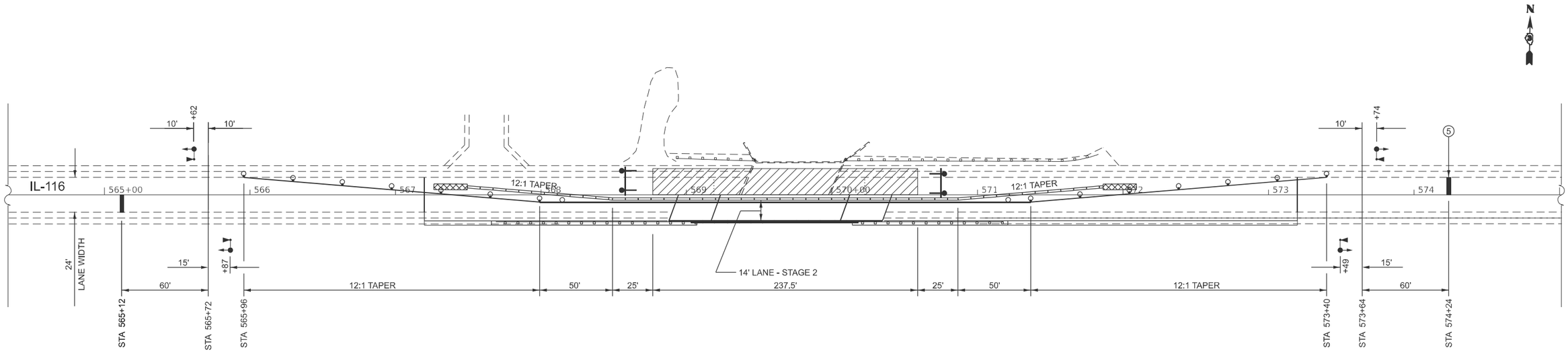

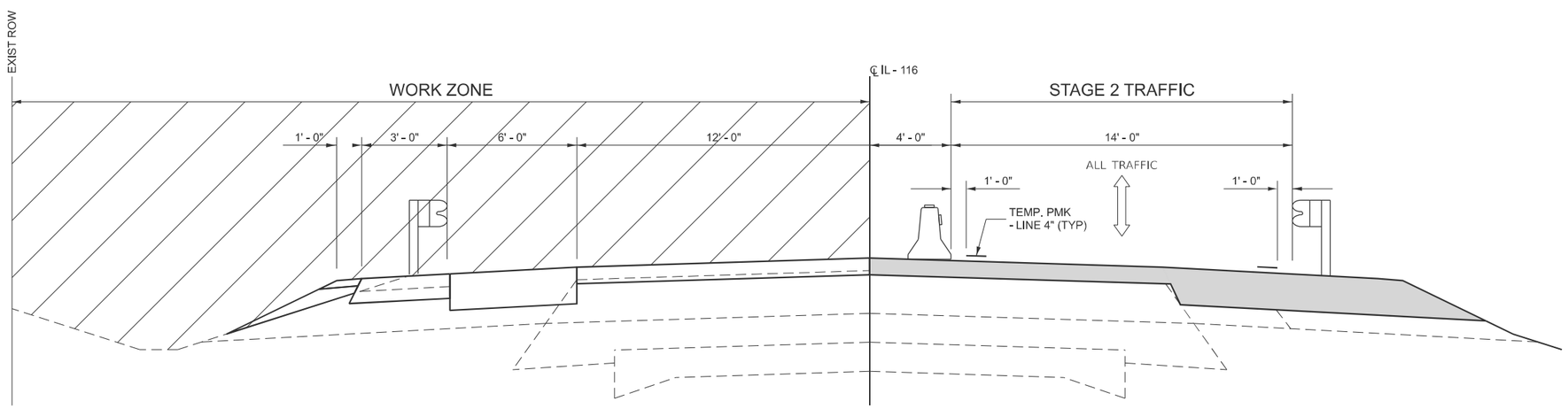

STAGE 2

STA 567+20 TO STA 573+20

NOT TO SCALE

LEGEND

- TRAFFIC CONTROL DRUM
- TRAFFIC CONTROL DRUM WITH STEADY BURNING BI-DRECTIONAL LIGHT
- TYPE III BARRICADES WITH FLASHING LIGHTS.
- TRAFFIC SIGNAL
- MICROWAVE SENSOR
- TEMPORARY CONCRETE BARRIER
- TEMPORARY IMPACT ATTENUATOR (NON-REDIRECTIVE, NARROW) TEST LEVEL 3
- WORKZONE
- WORK COMPLETED IN PREVIOUS STAGE

MODEL: Default
FILE NAME: c:\pw_work\pwidot\zagarjk\d1008618\66L79-TRAFFIC_CONTROL_&_PROTECTION.dgn

USER NAME = Joseph.Zagar	DESIGNED -	REVISED -	STATE OF ILLINOIS DEPARTMENT OF TRANSPORTATION
	DRAWN -	REVISED -	
	CHECKED -	REVISED -	
PLOT DATE = 8/12/2024	DATE -	REVISED -	

STAGE 2 TRAFFIC CONTROL & PROTECTION

SCALE: | SHEET OF SHEETS | STA. TO STA.

F.A.P RTE.	SECTION	COUNTY	TOTAL SHEETS	SHEET NO.
673	(112BR)BR	LIVINGSTON	65	22
		CONTRACT NO. 66L79		
	ILLINOIS	FED. AID PROJECT		

Benchmark: Cut " □ " on top of S.W. Wingwall, Station 569+25.51, 24.86' Rt., Elev. = 657.302.

Existing Structure (No. 053-0062):
Was originally constructed in 1970 under F.A. Route 147, Section 112-BR at Sta. 569+68. The superstructure consists of a 2-span continuous 16" slab, all supported on solid battered stem pier and cantilever-type closed abutments supported on spread footings. The structure has a 24°15'00" left ahead skew, a 46'-6" out-to-out width and an overall length of 63'-5⅜" back-to-back. In 2002, the bridge was rehabilitated.

Traffic to be maintained using staged construction.

No Salvage.

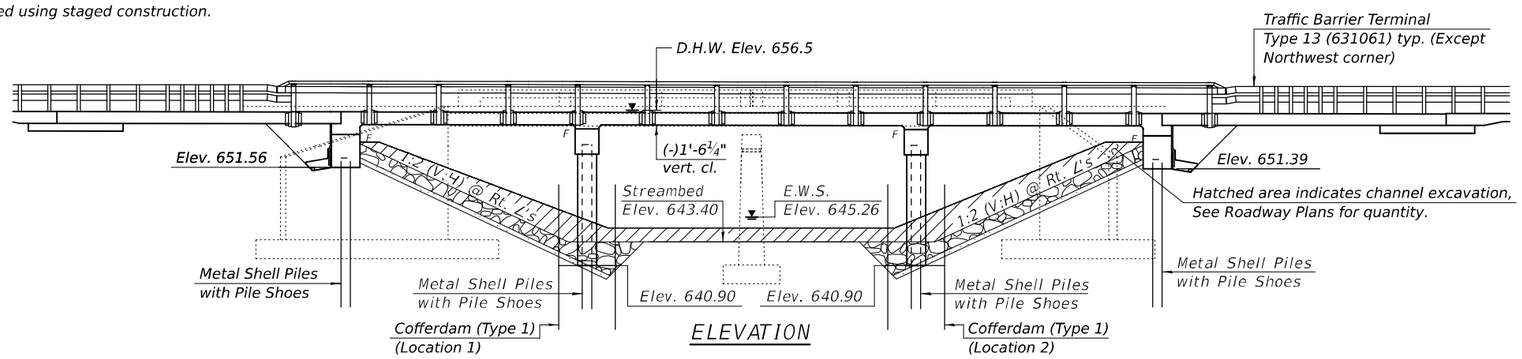

ELEVATION

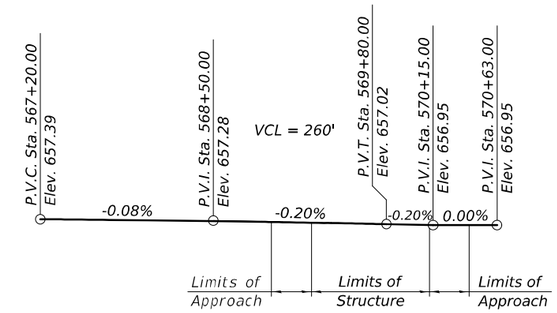

PROFILE GRADE - IL. RTE. 116
(Along ℄ of Roadway)

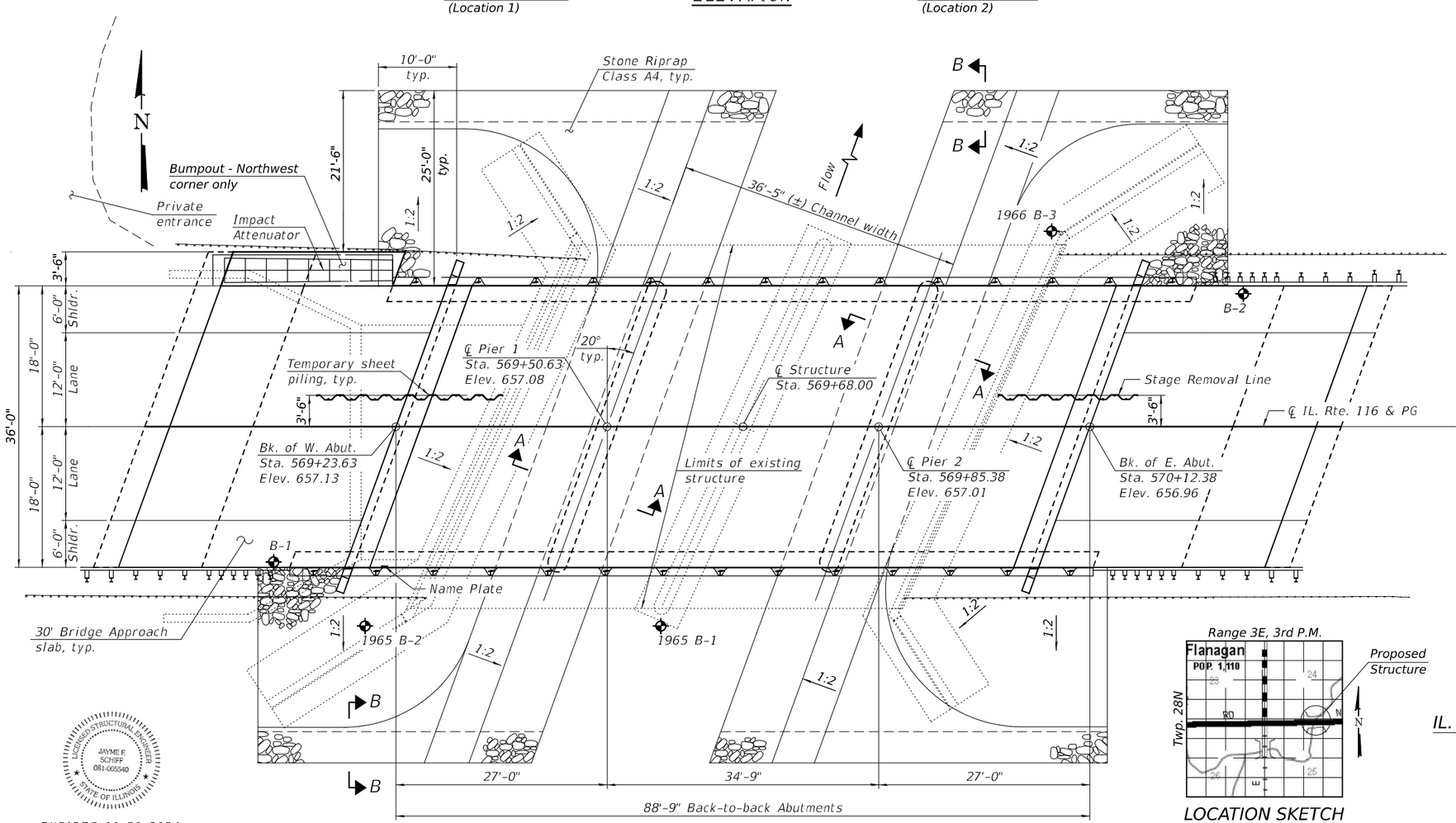

PLAN

DESIGN SPECIFICATIONS

2020 AASHTO LRFD Bridge Design Specifications, 9th Edition

LOADING HL-93

Allow 50#/sq. ft. for future wearing surface.

DESIGN STRESSES

FIELD UNITS

f'c = 3,500 psi
f'c = 4,000 psi (Superstructure)
fy = 60,000 psi (Reinforcement)

SEISMIC DATA

Seismic Performance Zone (SPZ) = 1
Design Spectral Acceleration at 1.0 sec. (SD1) = 0.078g
Design Spectral Acceleration at 0.2 sec. (SDS) = 0.133g
Soil Site Class = C

LOCATION SKETCH

LICENSED STRUCTURAL ENGINEER JAYME F. SCHIFF 081-005540 STATE OF ILLINOIS

EXPIRES 11-30-2024

GENERAL PLAN & ELEVATION
IL. ROUTE 116 OVER OVER SCATTERING POINT CREEK
F.A.P. ROUTE 673 - SECTION (112BR)ES
LIVINGSTON COUNTY
STATION 569+68.00
STRUCTURE NO. 053-0194

DESIGNED -	RYAN P. NEGANGARD	EXAMINED	ENGINEER OF BRIDGE DESIGN
CHECKED -	TIFFANY L. ADAMS		
DRAWN -	DENNIS A. POP	PASSED	ENGINEER OF BRIDGES AND STRUCTURES
CHECKED -	R.P.N. / T.L.A.		

DATE - 10/4/2024
REVISED -
REVISED -

STATE OF ILLINOIS
DEPARTMENT OF TRANSPORTATION

SHEET 1 OF 29 SHEETS

F.A.P. RTE.	SECTION	COUNTY	TOTAL SHEETS	SHEET NO.
673	(112BR)ES	LIVINGSTON	65	23

CONTRACT NO. 66L79
ILLINOIS FED. AID PROJECT

MODEL: 0530194-66L79-001
FILE NAME: pw://ildot-pw.bentley.com:PWIDOT/Documents/IDOT O ces/Bureau of Bridges and Structures/OBM Projects/0530194/CADData/Bridge/0530194-66L79-Design.dgn
10/3/2024 1:50:31 PM

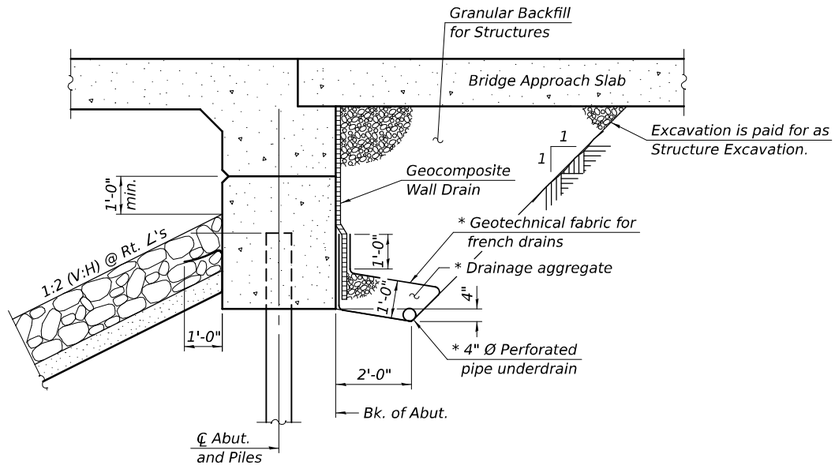

SECTION THRU INTEGRAL ABUTMENT

(Horiz. dim. at Rt. ∠'s)

* Included in the cost of Pipe Underdrains for Structures.

Note:
All drainage system components shall extend to 2'-0" from the end of each wingwall except an outlet pipe shall extend until intersecting with the side slopes. The pipes shall drain into concrete headwalls. (See Article 601.05 of the Standard Specifications and Highway Standard 601101).

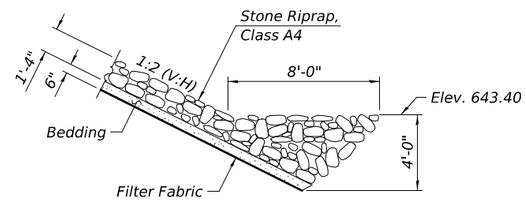

SECTION A-A

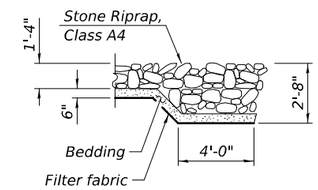

SECTION B-B

GENERAL NOTES

Reinforcement bars designated (E) shall be epoxy coated.

The Contractor shall make allowance for the deflection of forms, shrinkage and settlement of falsework, in addition to allowance for dead load deflection. Forms for deck slab shall be removed prior to placement of bridge approach slab.

Layout of the slope protection system may be varied to suit ground conditions in the field as directed by the Engineer.

The embankment configuration shown shall be the minimum that must be placed and compacted prior to construction of the abutments.

The existing bearings contain lead plates. The Contractor shall take appropriate precautions to deal with the presence of lead on this project.

The Contractor is advised that the existing concrete superstructure is a continuous structure and removal must be done in a proper sequence, possibly with falsework support. The sequence of removal and the use of any required falsework is the responsibility of the Contractor.

DESIGN SCOUR ELEVATION TABLE

Event / Limit State	Design Scour Elevations (ft.)				Item 113
	W. Abut.	Pier 1	Pier 2	E. Abut.	
Q100	651.56	638.40	638.40	651.39	8
Q200	651.56	638.30	638.30	651.39	
Design	651.56	638.40	638.40	651.39	
Check	651.56	638.30	638.30	651.39	

WATERWAY INFORMATION

Drainage Area = 20.5

Existing Overtopping Elev. 656.88 @ 570+20
Proposed Overtopping Elev. 656.92 @ 574+70

Flood	Freq. Yr.	Q C.F.S.	Opening Ft² Exist.	Opening Ft² Prop.	Nat. H.W.E.	Head - Ft. Exist.	Head - Ft. Prop.	Headwater El. Exist.	Headwater El. Prop.
Ten-Year	10	2,460	554	649	655.2	0.8	0.6	656.0	655.8
Overtop Existing	28	3,440	554	-	656.1	1.8	-	657.9	-
Overtop Proposed	36	3,690	-	649	656.3	-	1.2	-	657.5
Design	50	3,970	554	649	656.5	1.9	1.4	658.3	657.9
Base	100	4,650	554	649	656.9	1.9	1.5	658.9	658.4
Scour Check	200	5,360	554	649	657.4	2.0	1.2	659.4	658.6
Max. Calc.	500	6,300	554	649	658.0	1.2	0.9	659.2	658.9

10 year velocity through existing bridge = 4.7 ft/s
10 year velocity through proposed bridge = 3.8 ft/s

STA. 569+68.00
BUILT BY
STATE OF ILLINOIS
F.A.P. RTE. 673 SEC. (112BR)ES
LOADING HL-93
STR. NO. 053-0194

NAME PLATE

See Std. 515001

INDEX OF SHEETS

TOTAL BILL OF MATERIAL

ITEM	UNIT	SUPER	SUB	TOTAL
Stone Riprap, Class A4	Sq. Yd.		776	776
Filter Fabric	Sq. Yd.		776	776
Removal of Existing Structures	Each	1		1
Structure Excavation	Cu. Yd.		112	112
Cofferdam Excavation	Cu. Yd.		132	132
Cofferdam (Type 1) (Location - 1)	Each		1	1
Cofferdam (Type 1) (Location - 2)	Each		1	1
Concrete Structures	Cu. Yd.		147.4	147.4
Concrete Superstructure	Cu. Yd.	169.2		169.2
Bridge Deck Grooving	Sq. Yd.	554		554
Protective Coat	Sq. Yd.	595		595
Concrete Superstructure (Approach Slab)	Cu. Yd.		105.4	105.4
Reinforcement Bars, Epoxy Coated	Pound	101360	12520	113880
Bar Splicers	Each	561	162	723
Steel Railing, Type IL-OH	Foot	225		225
Furnishing Metal Shell Piles 14" x 0.312"	Foot		670	670
Driving PIles	Foot		670	670
Test Pile Metal Shells	Each		4	4
Pile Shoes	Each		24	24
Name Plates	Each	1		1
Temporary Sheet Piling	Sq. Ft.		509	509
Granular Backfill for Structures	Cu. Yd.		55	55
Geocomposite Wall Drain	Sq. Yd.		37	37
Pipe Underdrains for Structures 4"	Foot		123	123

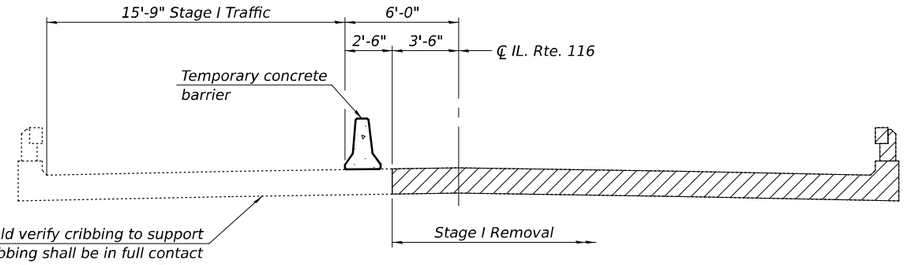

Contractor shall field verify cribbing to support Stage I Traffic. Cribbing shall be in full contact with bottom of slab. Cost included with Removal of Existing Structures.

STAGE I REMOVAL

(Looking East)

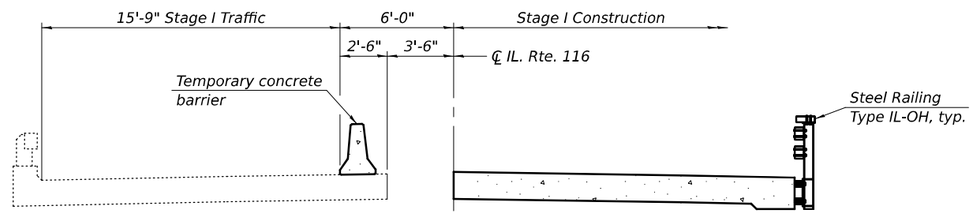

STAGE I CONSTRUCTION

(Looking East)

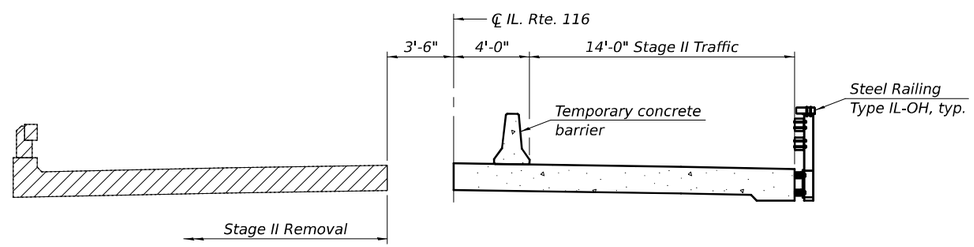

STAGE II REMOVAL

(Looking East)

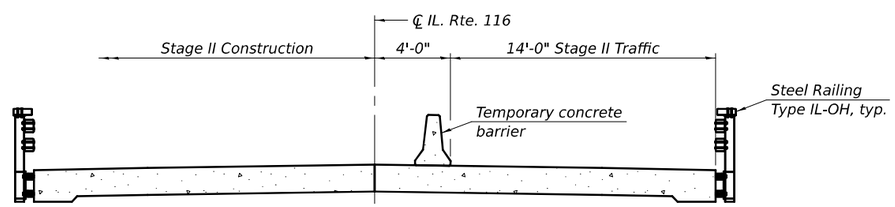

STAGE II CONSTRUCTION

(Looking East)

Notes:
Hatched area indicates Removal of Existing Structures.
For quantity of Temporary Concrete Barriers, see Roadway Plans. See sheet 5 of 29 for details.

DESIGNED - RYAN P. NEGANGARD	EXAMINED	DATE - 10/4/2024	STATE OF ILLINOIS DEPARTMENT OF TRANSPORTATION
CHECKED - TIFFANY L. ADAMS	ENGINEER OF BRIDGE DESIGN		
DRAWN - DENNIS A. POP	PASSED	REVISED -	
CHECKED - R.P.N. / T.L.A.	ENGINEER OF BRIDGES AND STRUCTURES	REVISED -	

STAGE CONSTRUCTION DETAILS
STRUCTURE NO. 053-0194

SHEET 3 OF 29 SHEETS

F.A.P. RTE.	SECTION	COUNTY	TOTAL SHEETS	SHEET NO.
673	(112BR)ES	LIVINGSTON	65	25
		CONTRACT NO. 66L79		
		ILLINOIS	FED. AID PROJECT	

MODEL: 05301946L79-003
FILE NAME: pw://ildot-pw.bentley.com:PWIDOT/Documents/IDOT Offices/Bureau of Bridges and Structures/OBM Projects/05301946/CADData/Bridge/05301946L79-Design.dgn
10/7/2024 11:11:20 AM

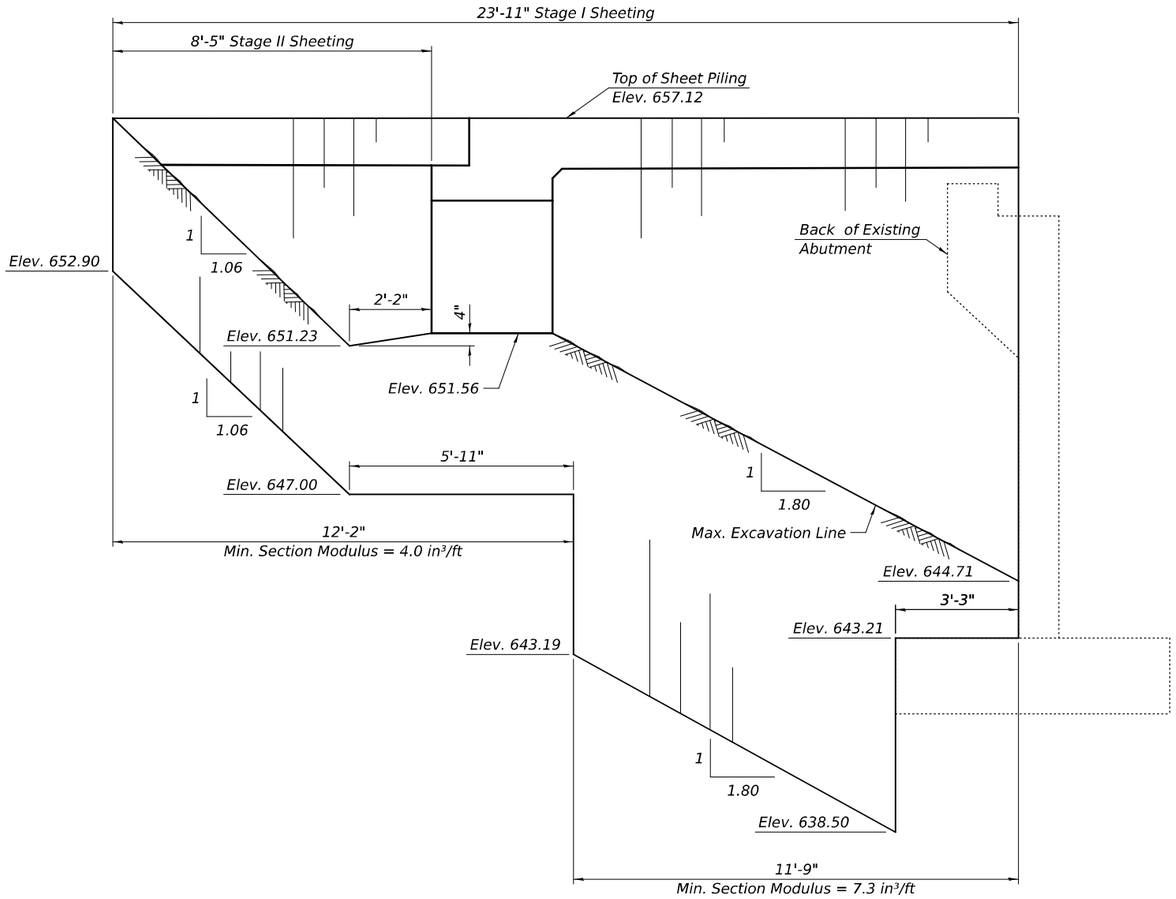

TEMPORARY SHEET PILING

(West Abutment - Looking North)

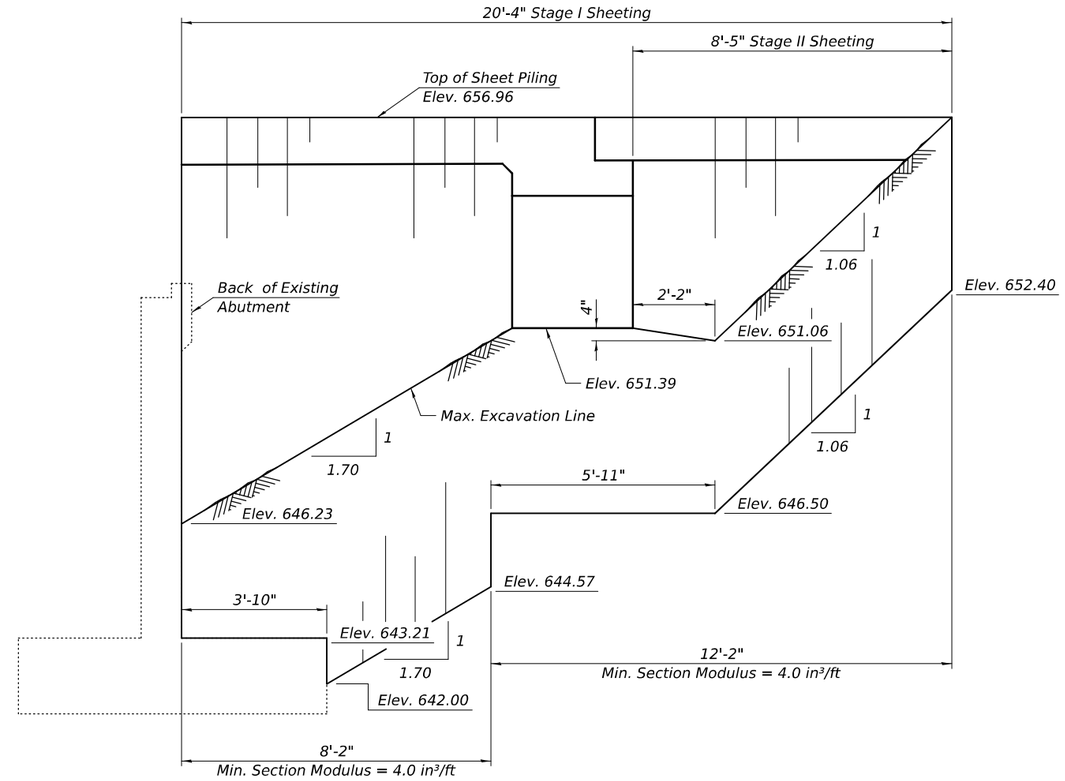

TEMPORARY SHEET PILING

(East Abutment - Looking North)

Notes:

If the Contractor chooses to alter the temporary cantilevered sheet piling design requirements shown on the plans, a design submittal including plan details and calculations will be required for review and acceptance by the Engineer.

The Contractor shall connect the first sheet to the existing abutment wall to ensure stability of sheets driven to the top of the existing footing. This connection shall be reviewed and accepted by the Engineer and included in the cost for Temporary Sheet Piling.

MODEL: 0530194-66L79-004
FILE NAME: pw://ildot-pw.bentley.com:PWIDOT/Documents/IDOT O ces/Bureau of Bridges and Structures/OBM Projects/0530194/CADData/Bridge/0530194-66L79-Design.dgn
10/7/2024 10:52:40 AM

DESIGNED - RYAN P. NEGANGARD	EXAMINED	DATE - 10/4/2024	
CHECKED - TIFFANY L. ADAMS	ENGINEER OF BRIDGE DESIGN		
DRAWN - DENNIS A. POP	PASSED	REVISED -	
CHECKED - R.P.N. / T.L.A.	ENGINEER OF BRIDGES AND STRUCTURES	REVISED -	

STATE OF ILLINOIS
DEPARTMENT OF TRANSPORTATION

TEMPORARY SHEET PILING
STRUCTURE NO. 053-0194

SHEET 4 OF 29 SHEETS

F.A.P. RTE.	SECTION	COUNTY	TOTAL SHEETS	SHEET NO.
673	(112BR)ES	LIVINGSTON	65	26
		CONTRACT NO. 66L79		
		ILLINOIS	FED. AID PROJECT	

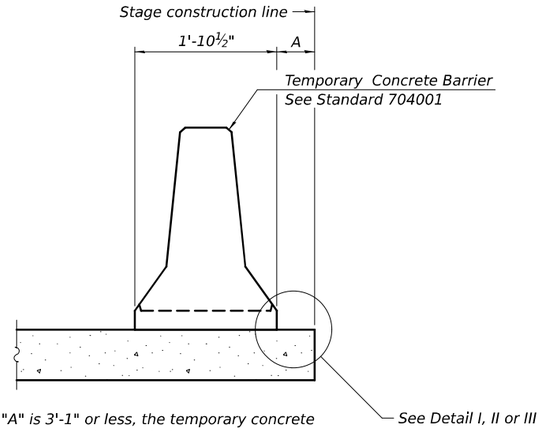

When "A" is 3'-1" or less, the temporary concrete barrier shall be restrained to the new slab according to Detail I, II or III. No restraint is required when "A" is greater than 3'-1".

NEW SLAB OR NEW DECK BEAM

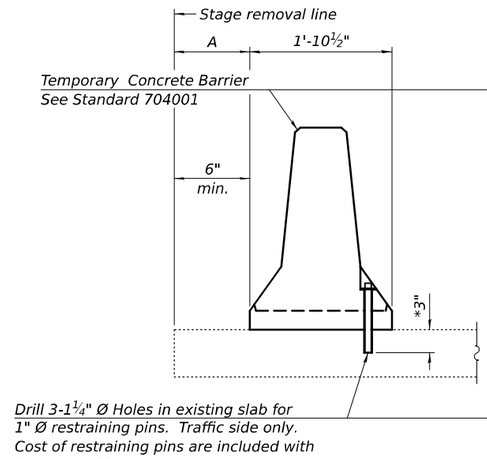

EXISTING SLAB

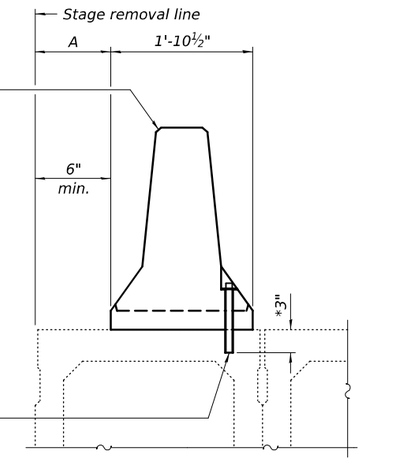

* When hot-mix asphalt wearing surface is present, embedment shall be 3" plus the wearing surface depth.

EXISTING DECK BEAM

SECTIONS THRU SLAB OR DECK BEAM

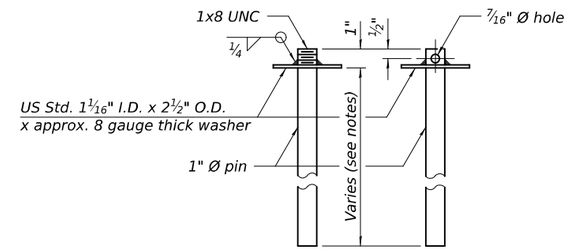

RESTRAINING PIN

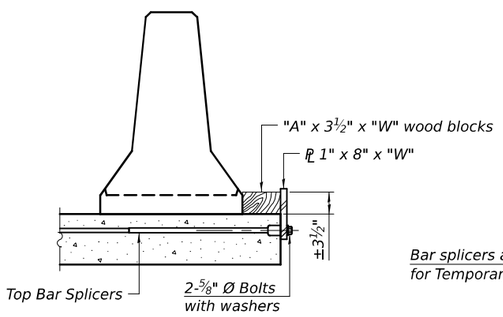

DETAIL I

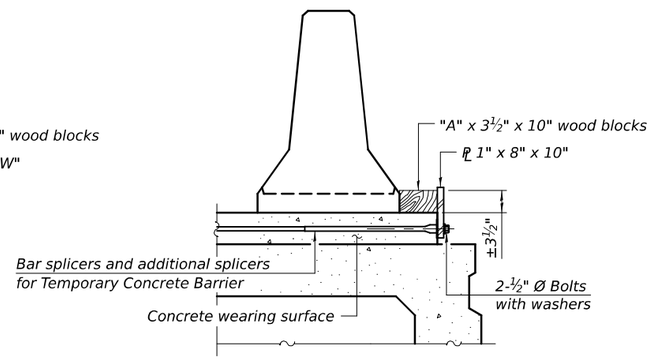

DETAIL II

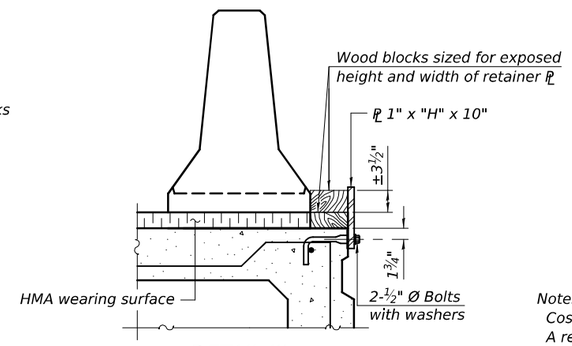

DETAIL III

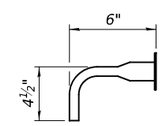

BAR SPLICER FOR #4 BAR - DETAIL III

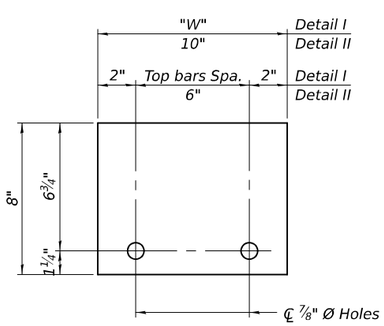

STEEL RETAINER PL 1" x 8" x "W"

(Detail I and II)

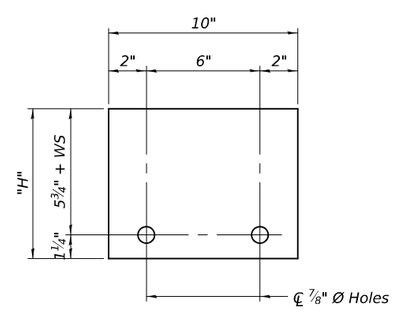

STEEL RETAINER PL 1" x "H" x 10"

(Detail III)

Notes:

Cost of retainer assembly is included with Temporary Concrete Barrier.

A retainer assembly shall be located at the approximate ℄ of each temporary concrete barrier.

The retainer plate shall not be removed until the concrete on the adjacent stage is ready to be poured. For Detail III applications the retainer plate shall not be removed until just prior to placing the adjacent beam.

When the 'A' dimension is less than 1½", the wood block shall be omitted and the barrier shall be placed in direct contact with the steel retainer plate. For deck beam applications the minimum required 'A' distance is 6" to accommodate the shear key clamping device.

Detail I - Installation for a new bridge deck or bridge slab.

Detail II - Installation for a new deck beam with an initial concrete wearing surface. Additional bar splicers shall be provided at 6'-0" centers and paired with the bar splicers of the concrete wearing surface reinforcement to accommodate the installation of the retainer assemblies. The cost of the additional bar splicers is included with the concrete wearing surface.

Detail III - Installation for a new deck beam with no initial wearing surface or with an initial hot-mix asphalt (HMA) wearing surface present. The deck beam directly beneath the temporary concrete barrier shall be fabricated with bar splicer inserts in the side of the beam, as detailed, to accommodate the installation of the retainer assemblies. A pair of bar splicers, 6" apart, shall be placed at 6'-0" centers along the length of the beam. The cost of the bar splicers is included with the deck beam.

RAILING CRITERIA

NCHRP 350 Test Level	3
Railing Weight (plf)	440

R-27

5-15-2023

DESIGNED -	RYAN P. NEGANGARD	EXAMINED	ENGINEER OF BRIDGE DESIGN
CHECKED -	TIFFANY L. ADAMS	PASSED	ENGINEER OF BRIDGES AND STRUCTURES
DRAWN -	DENNIS A. POP	DATE -	10/4/2024
CHECKED -	R.P.N. / T.L.A.	REVISED -	
		REVISED -	

STATE OF ILLINOIS
DEPARTMENT OF TRANSPORTATION

TEMPORARY CONCRETE BARRIER
STRUCTURE NO. 053-0194

SHEET 5 OF 29 SHEETS

F.A.P. RTE.	SECTION	COUNTY	TOTAL SHEETS	SHEET NO.
673	(112BR)ES	LIVINGSTON	65	27

CONTRACT NO. 66L79

ILLINOIS | FED. AID PROJECT

MODEL: 0530194-66L79-005
FILE NAME: pw://ildot-pw.bentley.com:PWIDOT/Documents/IDOT Offices/Bureau of Bridges and Structures/OBM Projects/0530194/CADData/Bridge/0530194-66L79-Design.dgn

10/7/2024 10:52:40 AM

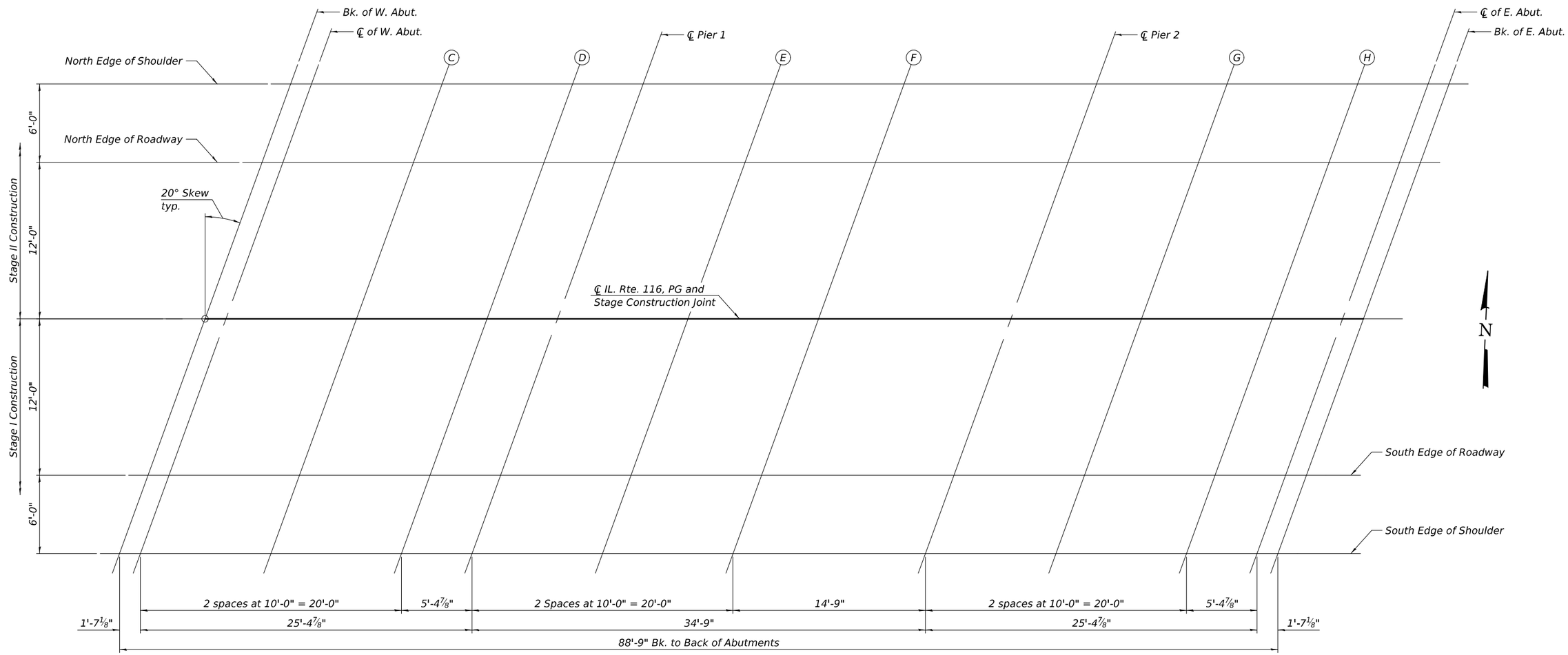

PLAN

Note:
The Dead Load Deflections are negligible. The Dead Load Deflection Diagram is not shown.

MODEL: 0530194-66L79-006
FILE NAME: pw://idot-pw.bentley.com:PWIDOT/Documents/IDOT Offices/Bureau of Bridges and Structures/OBM Projects/0530194/CADData/Bridge/0530194-66L79-Design.dgn
10/7/2024 10:52:42 AM

DESIGNED - RYAN P. NEGANGARD	EXAMINED	ENGINEER OF BRIDGE DESIGN	DATE - 10/4/2024	STATE OF ILLINOIS DEPARTMENT OF TRANSPORTATION	TOP OF SLAB ELEVATIONS STRUCTURE NO. 053-0194	F.A.P. RTE.	SECTION	COUNTY	TOTAL SHEETS	SHEET NO.
CHECKED - TIFFANY L. ADAMS						673	(112BR)ES	LIVINGSTON	65	28
DRAWN - DENNIS A. POP	PASSED	ENGINEER OF BRIDGES AND STRUCTURES	REVISED -		SHEET 6 OF 29 SHEETS			CONTRACT NO. 66L79		
CHECKED - R.P.N. / T.L.A.			REVISED -				ILLINOIS	FED. AID PROJECT		

NORTH EDGE OF SHOULDER

Location	Station	Offset	Theoretical Grade Elevations
Bk. West Abutment	569+30.18	-18.00	656.81
℄ West Abutment	569+31.77	-18.00	656.81
C	569+41.77	-18.00	656.79
D	569+51.77	-18.00	656.77
℄ Pier 1	569+57.18	-18.00	656.76
E	569+67.18	-18.00	656.75
F	569+77.18	-18.00	656.73
℄ Pier 2	569+91.93	-18.00	656.70
G	570+01.93	-18.00	656.68
H	570+11.93	-18.00	656.66
℄ East Abutment	570+17.33	-18.00	656.65
Bk. East Abutment	570+18.93	-18.00	656.64

NORTH EDGE OF ROADWAY

Location	Station	Offset	Theoretical Grade Elevations
Bk. West Abutment	569+27.99	-12.00	656.94
℄ West Abutment	569+29.59	-12.00	656.94
C	569+39.59	-12.00	656.92
D	569+49.59	-12.00	656.90
℄ Pier 1	569+54.99	-12.00	656.89
E	569+64.99	-12.00	656.87
F	569+74.99	-12.00	656.85
℄ Pier 2	569+89.74	-12.00	656.82
G	569+99.74	-12.00	656.80
H	570+09.74	-12.00	656.78
℄ East Abutment	570+15.15	-12.00	656.77
Bk. East Abutment	570+16.74	-12.00	656.77

℄ ROADWAY, PG & STAGE CONSTRUCTION JOINT

Location	Station	Offset	Theoretical Grade Elevations
Bk. West Abutment	569+23.63	0.00	657.13
℄ West Abutment	569+25.22	0.00	657.12
C	569+35.22	0.00	657.11
D	569+45.22	0.00	657.09
℄ Pier 1	569+50.63	0.00	657.08
E	569+60.63	0.00	657.06
F	569+70.63	0.00	657.04
℄ Pier 2	569+85.38	0.00	657.01
G	569+95.38	0.00	656.99
H	570+05.38	0.00	656.97
℄ East Abutment	570+10.78	0.00	656.96
Bk. East Abutment	570+12.38	0.00	656.96

SOUTH EDGE OF ROADWAY

Location	Station	Offset	Theoretical Grade Elevations
Bk. West Abutment	569+19.26	12.00	656.95
℄ West Abutment	569+20.85	12.00	656.95
C	569+30.85	12.00	656.93
D	569+40.85	12.00	656.91
℄ Pier 1	569+46.26	12.00	656.90
E	569+56.26	12.00	656.89
F	569+66.26	12.00	656.87
℄ Pier 2	569+81.01	12.00	656.84
G	569+91.01	12.00	656.82
H	570+01.01	12.00	656.80
℄ East Abutment	570+06.41	12.00	656.79
Bk. East Abutment	570+08.01	12.00	656.78

SOUTH EDGE OF SHOULDER

Location	Station	Offset	Theoretical Grade Elevations
Bk. West Abutment	569+17.07	18.00	656.84
℄ West Abutment	569+18.67	18.00	656.83
C	569+28.67	18.00	656.82
D	569+38.67	18.00	656.80
℄ Pier 1	569+44.07	18.00	656.79
E	569+54.07	18.00	656.77
F	569+64.07	18.00	656.75
℄ Pier 2	569+78.82	18.00	656.72
G	569+88.82	18.00	656.70
H	569+98.82	18.00	656.68
℄ East Abutment	570+04.23	18.00	656.67
Bk. East Abutment	570+05.82	18.00	656.67

NORTH EDGE OF SHOULDER

Location	Station	Offset	Theoretical Grade Elevations
W. End of W. Appr. Slab	569+01.24	-18.00	656.86
A	569+11.24	-18.00	656.85
B	569+21.24	-18.00	656.83
E. End of W. Appr. Slab	569+31.24	-18.00	656.81

NORTH EDGE OF ROADWAY

Location	Station	Offset	Theoretical Grade Elevations
W. End of W. Appr. Slab	568+99.06	-12.00	656.99
A	569+09.06	-12.00	656.97
B	569+19.06	-12.00	656.95
E. End of W. Appr. Slab	569+29.06	-12.00	656.94

℄ ROADWAY, PG & STAGE CONSTRUCTION JOINT

Location	Station	Offset	Theoretical Grade Elevations
W. End of W. Appr. Slab	568+94.69	0.00	657.17
A	569+04.69	0.00	657.16
B	569+14.69	0.00	657.14
E. End of W. Appr. Slab	569+24.69	0.00	657.12

SOUTH EDGE OF ROADWAY

Location	Station	Offset	Theoretical Grade Elevations
W. End of W. Appr. Slab	568+90.32	12.00	657.00
A	569+00.32	12.00	656.99
B	569+10.32	12.00	656.97
E. End of W. Appr. Slab	569+20.32	12.00	656.95

SOUTH EDGE OF SHOULDER

Location	Station	Offset	Theoretical Grade Elevations
W. End of W. Appr. Slab	568+88.14	18.00	656.88
A	568+98.14	18.00	656.87
B	569+08.14	18.00	656.85
E. End of W. Appr. Slab	569+18.14	18.00	656.84

NORTH EDGE OF BUMPOUT

Location	Station	Offset	Theoretical Grade Elevations
W. End of Bumpout	569+02.51	-21.50	656.79
A	569+12.51	-21.50	656.77
B	569+22.51	-21.50	656.76
E. End of Bumpout	569+24.45	-21.50	656.75

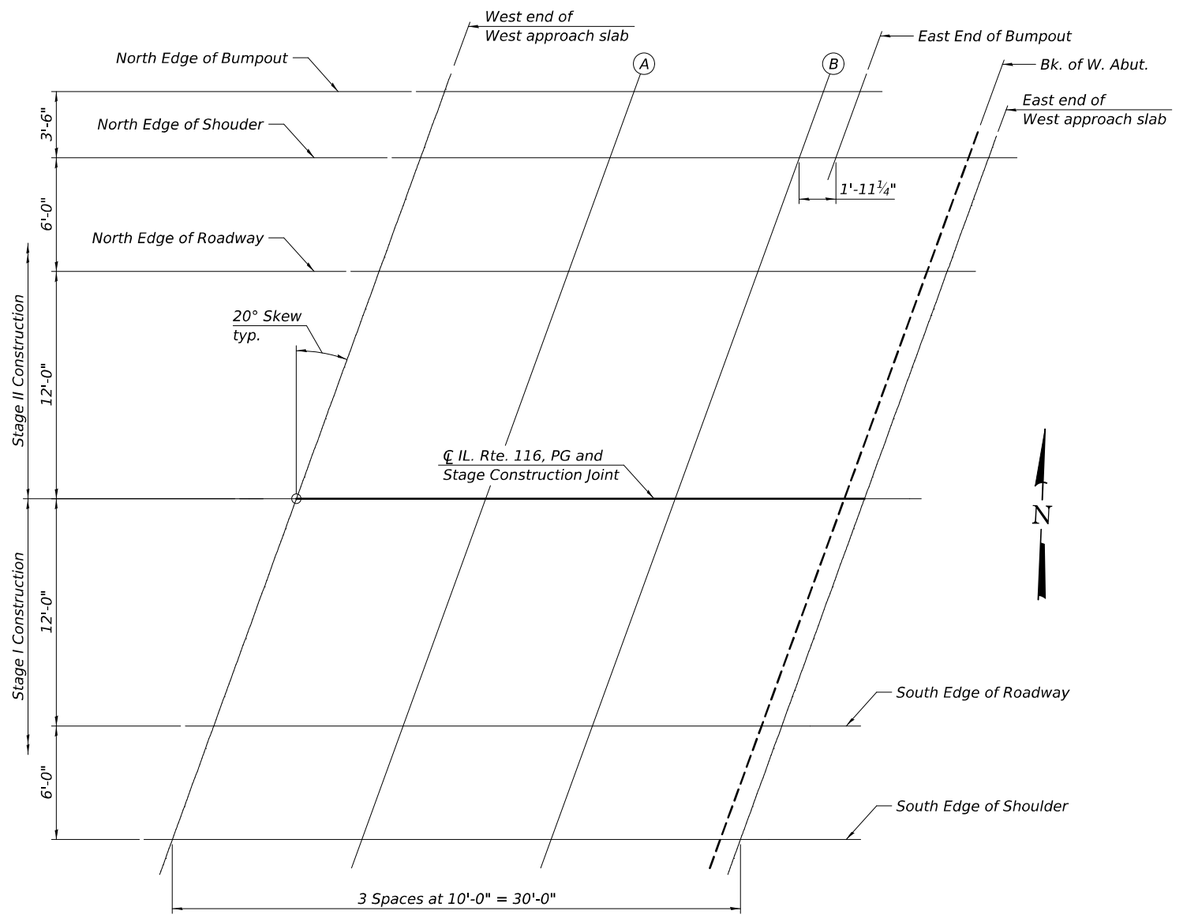

PLAN

DESIGNED - RYAN P. NEGANGARD	EXAMINED	DATE - 10/4/2024	STATE OF ILLINOIS DEPARTMENT OF TRANSPORTATION
CHECKED - TIFFANY L. ADAMS	ENGINEER OF BRIDGE DESIGN		
DRAWN - DENNIS A. POP	PASSED	REVISED -	
CHECKED - R.P.N. / T.L.A.	ENGINEER OF BRIDGES AND STRUCTURES	REVISED -	

TOP OF WEST APPROACH SLAB ELEVATIONS
STRUCTURE NO. 053-0194

SHEET 8 OF 29 SHEETS

F.A.P. RTE.	SECTION	COUNTY	TOTAL SHEETS	SHEET NO.
673	(112BR)ES	LIVINGSTON	65	30

CONTRACT NO. 66L79

ILLINOIS | FED. AID PROJECT

MODEL: 0530194-66L79-008
FILE NAME: pw://ildot-pw.bentley.com:PWIDOT/Documents/IDOT Offices/Bureau of Bridges and Structures/OBM Projects/0530194/CADData/Bridge/0530194-66L79-Design.dgn
10/7/2024 10:52:43 AM

NORTH EDGE OF SHOULDER

Location	Station	Offset	Theoretical Grade Elevations
W. End of E. Appr. Slab	570+17.86	-18.00	656.65
I	570+27.86	-18.00	656.65
J	570+37.86	-18.00	656.65
E. End of E. Appr. Slab	570+47.86	-18.00	656.65

NORTH EDGE OF ROADWAY

Location	Station	Offset	Theoretical Grade Elevations
W. End of E. Appr. Slab	570+15.68	-12.00	656.77
I	570+25.68	-12.00	656.77
J	570+35.68	-12.00	656.77
E. End of E. Appr. Slab	570+45.68	-12.00	656.77

℄ ROADWAY, PG & STAGE CONSTRUCTION JOINT

Location	Station	Offset	Theoretical Grade Elevations
W. End of E. Appr. Slab	570+11.31	0.00	656.96
I	570+21.31	0.00	656.95
J	570+31.31	0.00	656.95
E. End of E. Appr. Slab	570+41.31	0.00	656.95

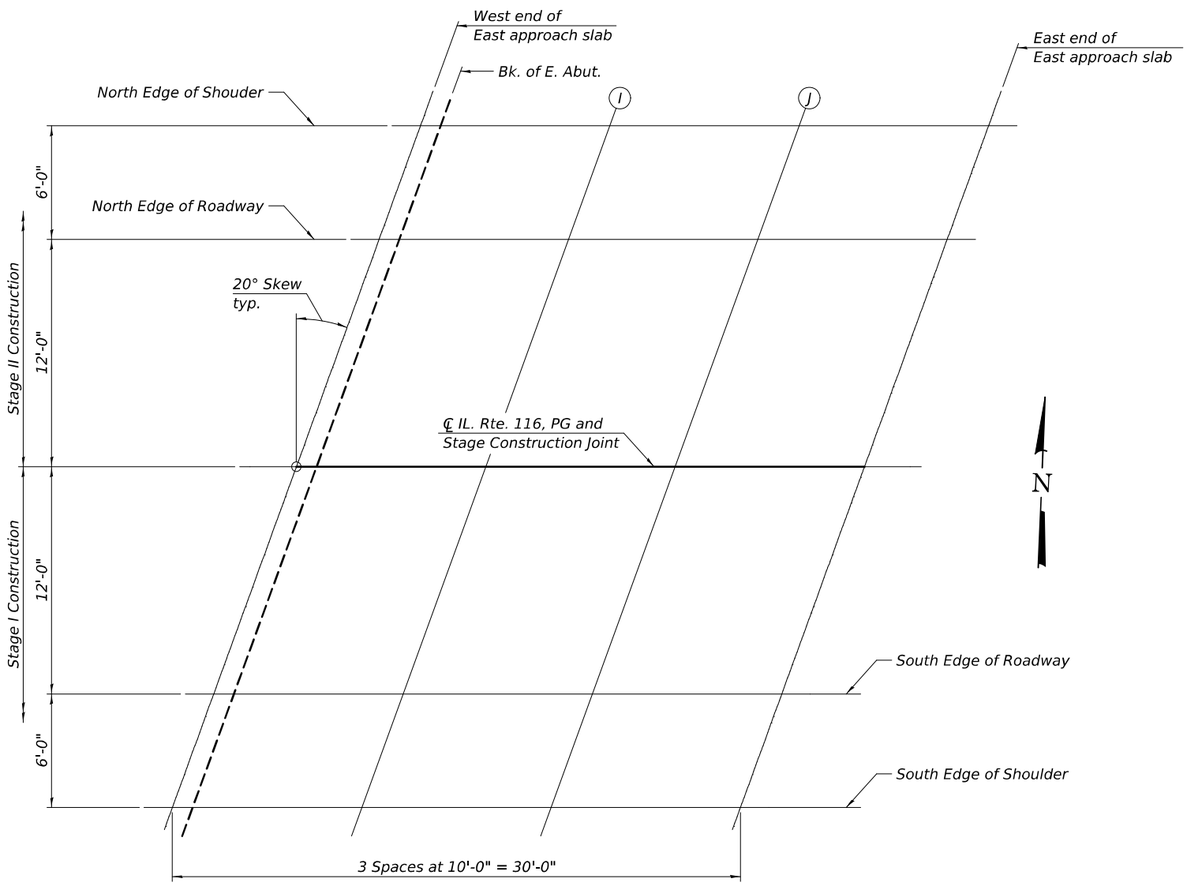

PLAN

SOUTH EDGE OF ROADWAY

Location	Station	Offset	Theoretical Grade Elevations
W. End of E. Appr. Slab	570+06.94	12.00	656.79
I	570+16.94	12.00	656.77
J	570+26.94	12.00	656.77
E. End of E. Appr. Slab	570+36.94	12.00	656.77

SOUTH EDGE OF SHOULDER

Location	Station	Offset	Theoretical Grade Elevations
W. End of E. Appr. Slab	570+04.76	18.00	656.67
I	570+14.76	18.00	656.65
J	570+24.76	18.00	656.65
E. End of E. Appr. Slab	570+34.76	18.00	656.65

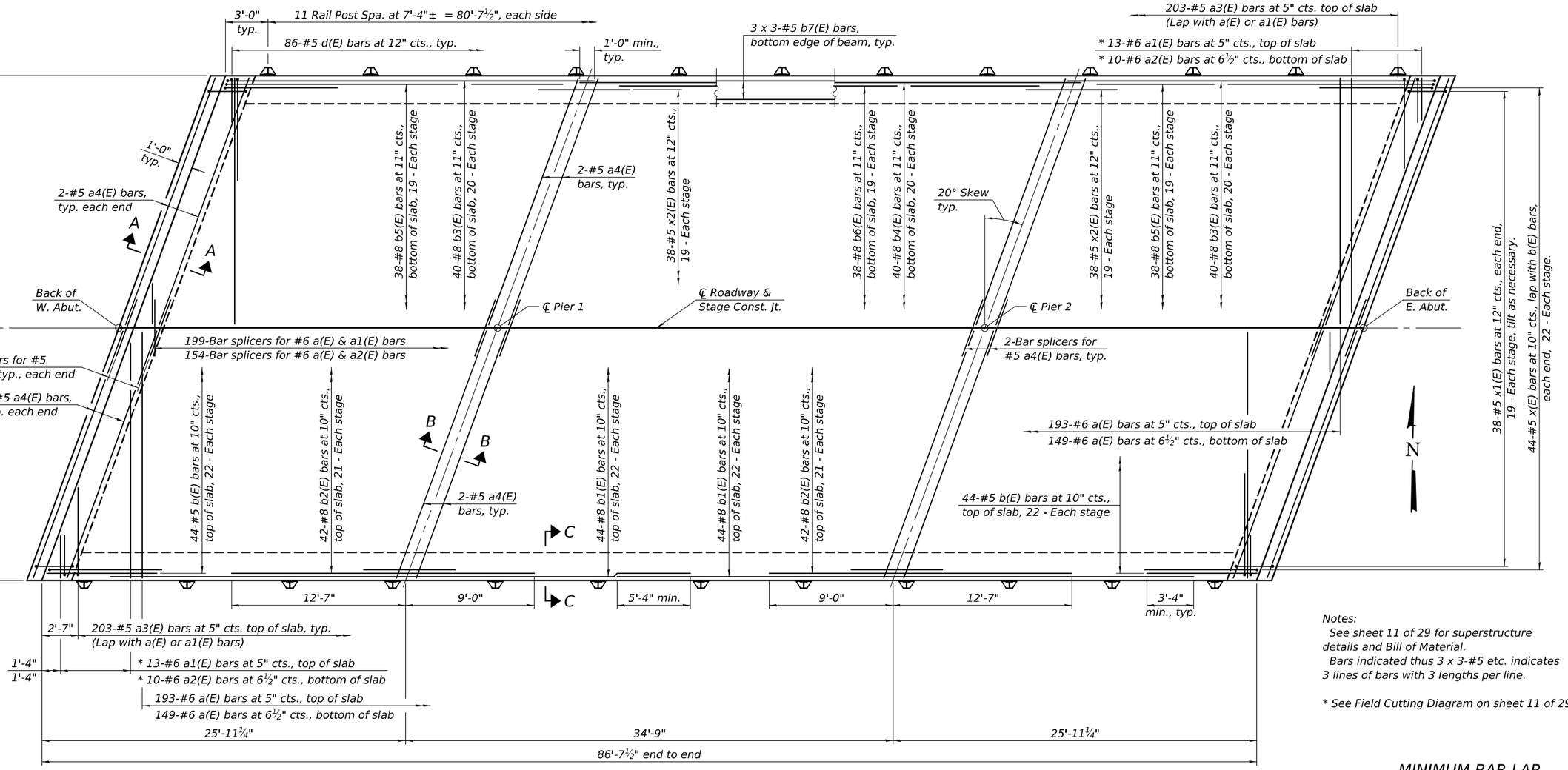

PLAN

Notes:
See sheet 11 of 29 for superstructure details and Bill of Material.
Bars indicated thus 3 x 3-#5 etc. indicates 3 lines of bars with 3 lengths per line.

* See Field Cutting Diagram on sheet 11 of 29.

MINIMUM BAR LAP

#5 b7(E) bar = 3'-0"

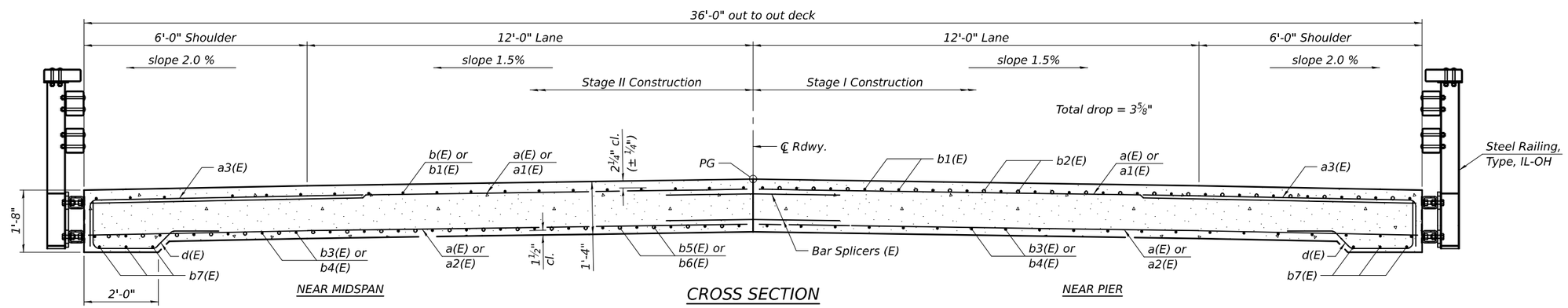

CROSS SECTION

(Looking East)

DESIGNED - RYAN P. NEGANGARD	EXAMINED	ENGINEER OF BRIDGE DESIGN	DATE - 10/4/2024	STATE OF ILLINOIS DEPARTMENT OF TRANSPORTATION	SUPERSTRUCTURE STRUCTURE NO. 053-0194	F.A.P. RTE.	SECTION	COUNTY	TOTAL SHEETS / SHEET NO.
CHECKED - TIFFANY L. ADAMS						673	(112BR)ES	LIVINGSTON	65 / 32
DRAWN - DENNIS A. POP	PASSED	ENGINEER OF BRIDGES AND STRUCTURES	REVISED -		SHEET 10 OF 29 SHEETS			CONTRACT NO. 66L79	
CHECKED - R.P.N. / T.L.A.			REVISED -					ILLINOIS FED. AID PROJECT	

MODEL: 0530194-66L79-010
FILE NAME: pw://ildot-pw.bentley.com:PWIDOT\Documents\IDOT Offices\Bureau of Bridges and Structures\OBM Projects\0530194\CADData\Bridge\0530194-66L79-Design.dgn
10/7/2024 10:52:45 AM

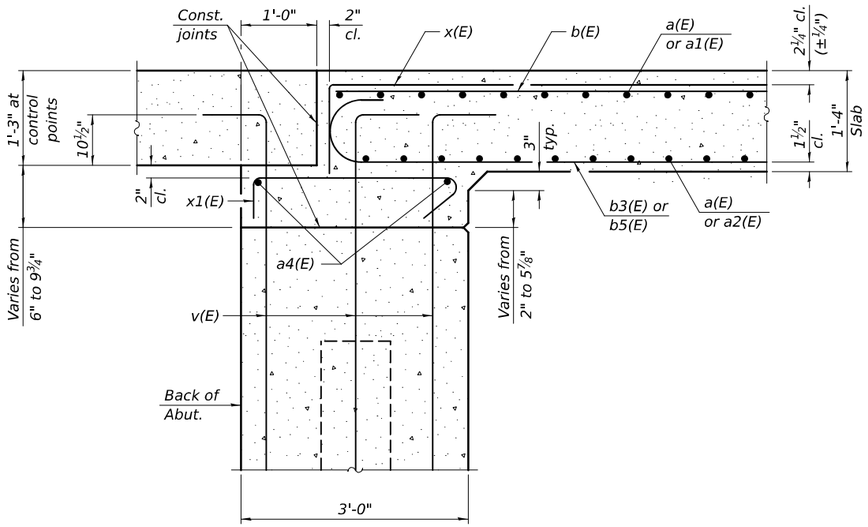

SECTION A-A

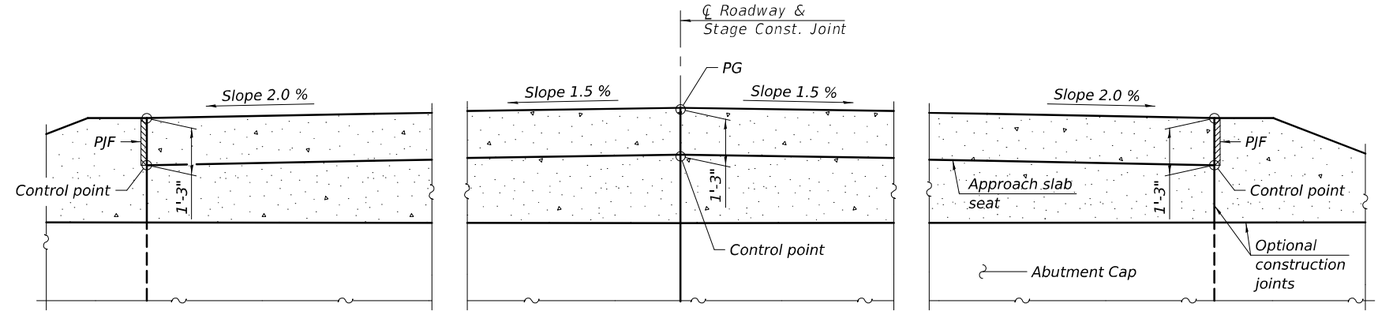

APPROACH SLAB SEAT

Notes:
See sheet 14 of 29 for PJF details.
The approach slab seat shall have a constant slope determined from the control points shown.

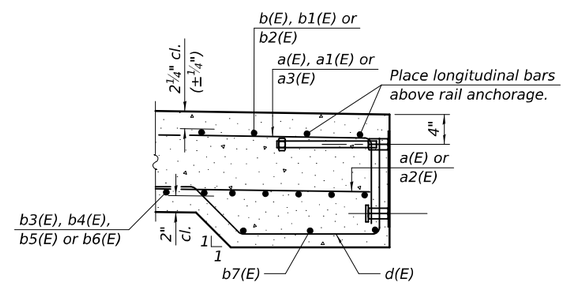

SECTION C-C

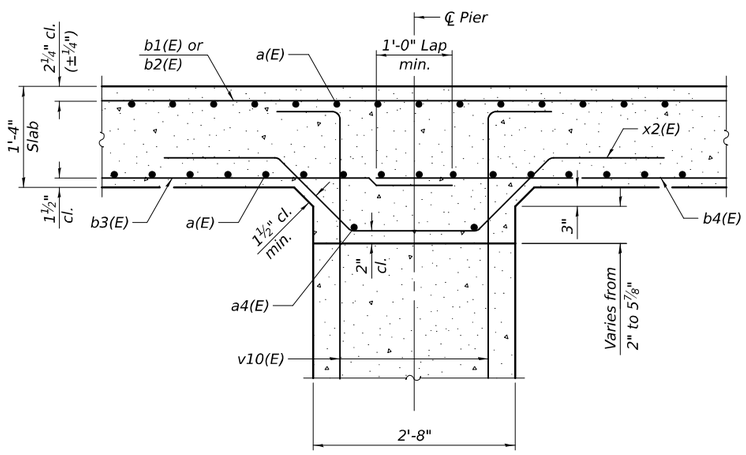

SECTION B-B

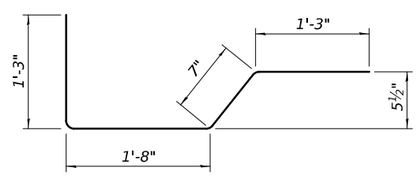

BAR d(E)

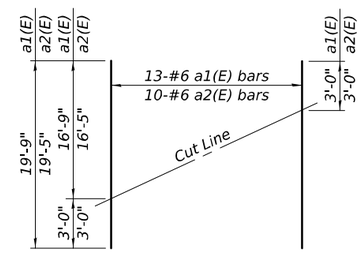

FIELD CUTTING DIAGRAM

Order a1(E) and a2(E) bars full length. Cut as shown and use remainder of bars in opposite end of deck.

SUPERSTRUCTURE BILL OF MATERIAL

Bar	No.	Size	Length	Shape
a(E)	684	#6	17'-8"	
a1(E)	26	#6	19'-9"	
a2(E)	20	#6	19'-5"	
a3(E)	406	#5	7'-8"	
a4(E)	16	#5	18'-10"	
b(E)	88	#5	7'-10"	
b1(E)	88	#8	41'-5"	
b2(E)	84	#8	21'-7"	
b3(E)	80	#8	27'-3"	
b4(E)	40	#8	35'-9"	
b5(E)	76	#8	25'-0"	
b6(E)	38	#8	29'-11"	
b7(E)	18	#5	30'-10"	
d(E)	172	#5	4'-9"	
x(E)	88	#5	9'-4"	
x1(E)	76	#5	3'-10"	
x2(E)	76	#5	8'-4"	
Reinforcement Bars, Epoxy Coated			Pound	59,360
Concrete Superstructure			Cu. Yd.	169.2

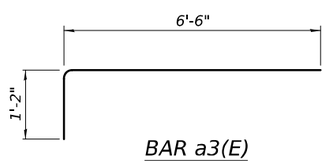

BAR a3(E)

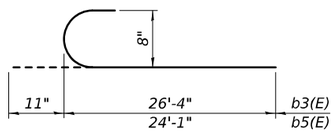

BAR b3(E) & b5(E)

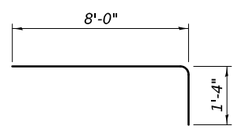

BAR x(E)

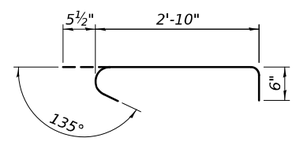

BAR x1(E)

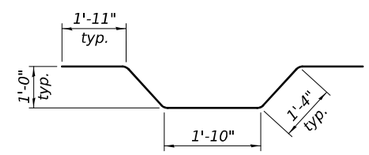

BAR x2(E)

DESIGNED - RYAN P. NEGANGARD	EXAMINED	DATE - 10/4/2024	STATE OF ILLINOIS DEPARTMENT OF TRANSPORTATION
CHECKED - TIFFANY L. ADAMS	ENGINEER OF BRIDGE DESIGN		
DRAWN - DENNIS A. POP	PASSED	REVISED -	
CHECKED - R.P.N. / T.L.A.	ENGINEER OF BRIDGES AND STRUCTURES	REVISED -	

SUPERSTRUCTURE DETAILS
STRUCTURE NO. 053-0194
SHEET 11 OF 29 SHEETS

F.A.P. RTE.	SECTION	COUNTY	TOTAL SHEETS	SHEET NO.
673	(112BR)ES	LIVINGSTON	65	33
		CONTRACT NO. 66L79		
		ILLINOIS	FED. AID PROJECT	

MODEL: 0530194-66L79-011
FILE NAME: pw://ildot-pw.bentley.com:PWIDOT/Documents/IDOT Offices/Bureau of Bridges and Structures/OBM Projects/0530194/CADData/Bridge/0530194-66L79-Design.dgn
10/7/2024 10:52:45 AM

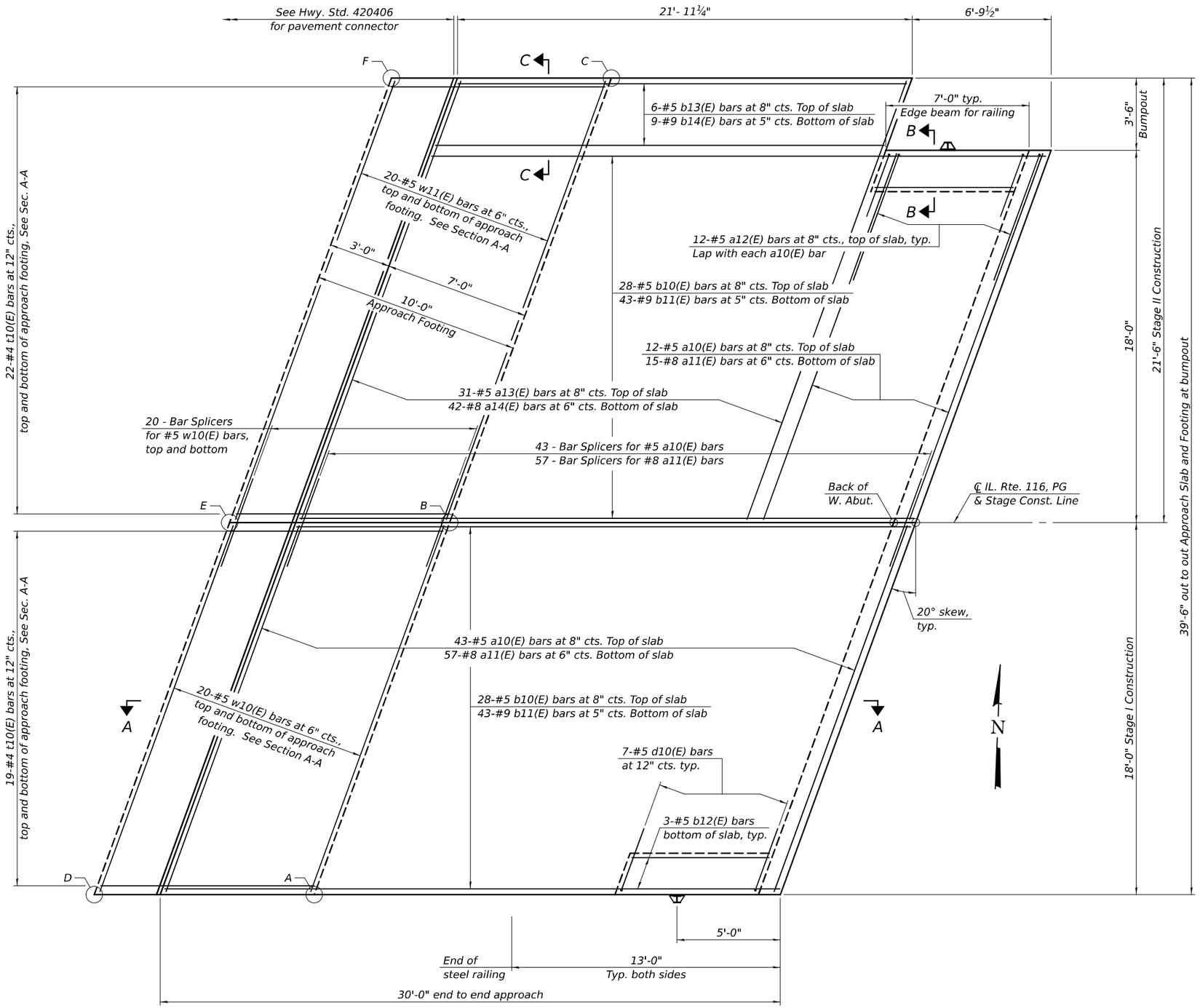

PLAN

TOP AND BOTTOM ELEVATIONS FOR APPROACH FOOTING

West Approach		
Point/ Location	Top	Bottom
A - SE	655.62	654.79
B - E ℄	655.91	655.08
C - NE	655.53	654.70
D - SW	655.64	654.81
E - W ℄	655.93	655.10
F - NW	655.55	654.72

MODEL: 0530194-66L79-012
FILE NAME: pw://ildot-pw.bentley.com:PWIDOT:Documents/IDOT Offices/Bureau of Bridges and Structures/OBH Projects/0530194/CADData/Bridge/0530194-66L79-Design.dgn
10/7/2024 10:52:46 AM

DESIGNED -	RYAN P. NEGANGARD	EXAMINED	ENGINEER OF BRIDGE DESIGN
CHECKED -	TIFFANY L. ADAMS	PASSED	ENGINEER OF BRIDGES AND STRUCTURES
DRAWN -	DENNIS A. POP	DATE -	10/4/2024
CHECKED -	R.P.N. / T.L.A.	REVISED -	
		REVISED -	

STATE OF ILLINOIS
DEPARTMENT OF TRANSPORTATION

WEST BRIDGE APPROACH SLAB
STRUCTURE NO. 053-0194

SHEET 12 OF 29 SHEETS

F.A.P. RTE.	SECTION	COUNTY	TOTAL SHEETS	SHEET NO.
673	(112BR)ES	LIVINGSTON	65	34
		CONTRACT NO. 66L79		
	ILLINOIS	FED. AID PROJECT		

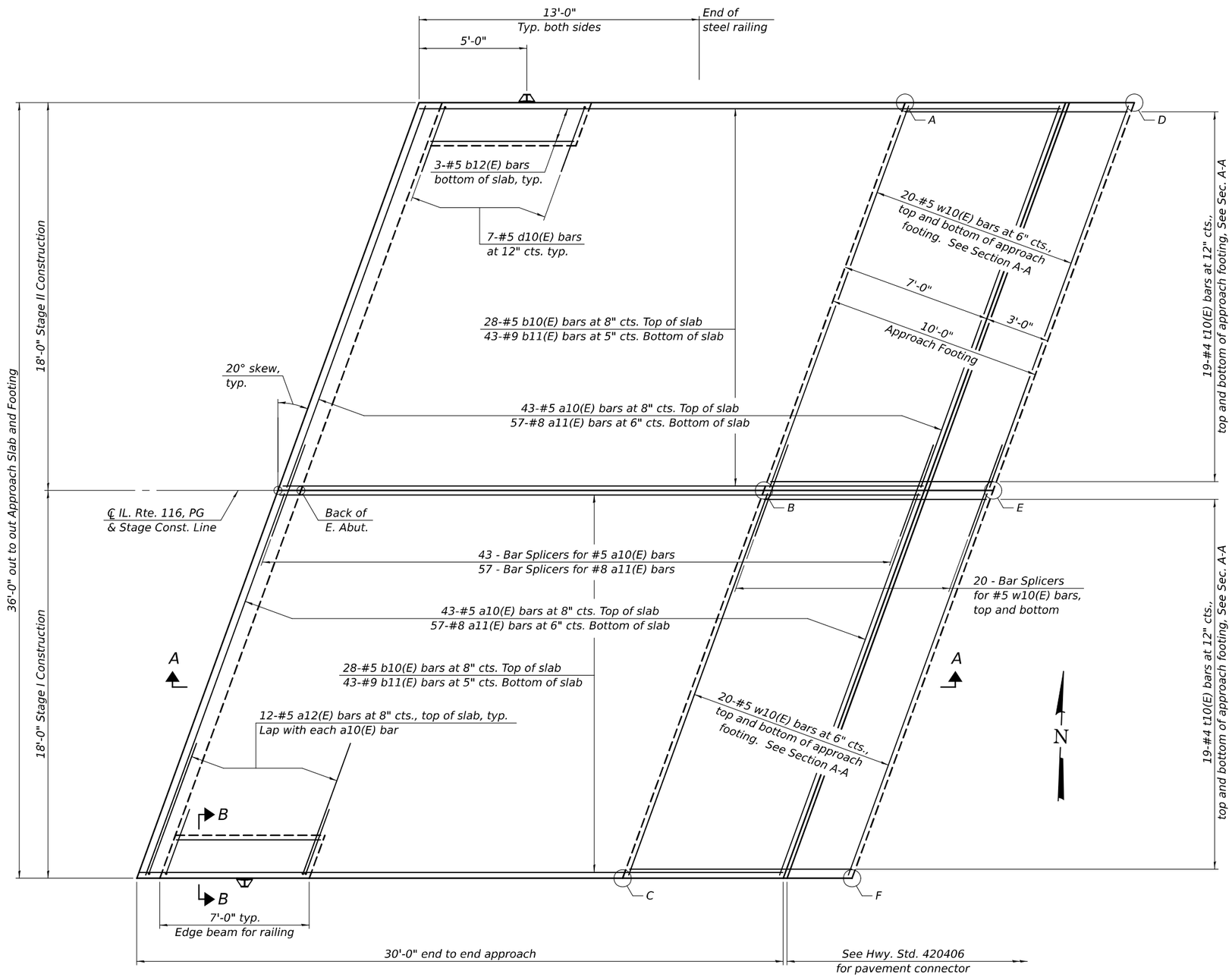

PLAN

TOP AND BOTTOM ELEVATIONS FOR APPROACH FOOTING

East Approach		
Point/ Location	Top	Bottom
A - NW	655.40	654.57
B - W ℄	655.70	654.87
C - SW	655.40	654.57
D - NE	655.40	654.57
E - E ℄	655.70	654.87
F - SE	655.40	654.57

MODEL: 0530194-66L79-013
FILE NAME: pw://ildot-pw.bentley.com:PWIDOT/Documents/IDOT Offices/Bureau of Bridges and Structures/OBM Projects/0530194/CADData/Bridge/0530194-66L79-Design.dgn
10/7/2024 10:52:47 AM

DESIGNED -	RYAN P. NEGANGARD	EXAMINED	ENGINEER OF BRIDGE DESIGN
CHECKED -	TIFFANY L. ADAMS	PASSED	ENGINEER OF BRIDGES AND STRUCTURES
DRAWN -	DENNIS A. POP	DATE -	10/4/2024
CHECKED -	R.P.N. / T.L.A.	REVISED -	
		REVISED -	

STATE OF ILLINOIS
DEPARTMENT OF TRANSPORTATION

EAST BRIDGE APPROACH SLAB
STRUCTURE NO. 053-0194

SHEET 13 OF 29 SHEETS

F.A.P. RTE.	SECTION	COUNTY	TOTAL SHEETS	SHEET NO.
673	(112BR)ES	LIVINGSTON	65	35
		CONTRACT NO. 66L79		
	ILLINOIS	FED. AID PROJECT		

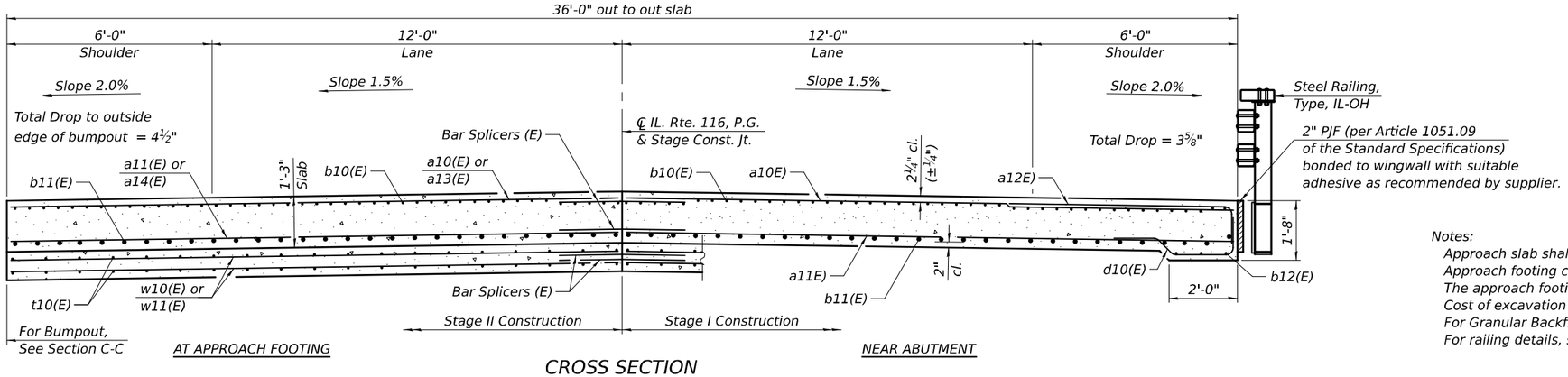

CROSS SECTION
(Looking East)

Notes:
- Approach slab shall be paid for as Concrete Superstructure (Approach Slab).
- Approach footing concrete shall be paid for as Concrete Structures.
- The approach footing maximum applied service bearing pressure (Qmax) = 2.0 ksf.
- Cost of excavation for approach footing included with Concrete Structures.
- For Granular Backfill for Structures and drainage treatment details, see sheet 2 of 29.
- For railing details, see sheets 15 thru 18 of 29.

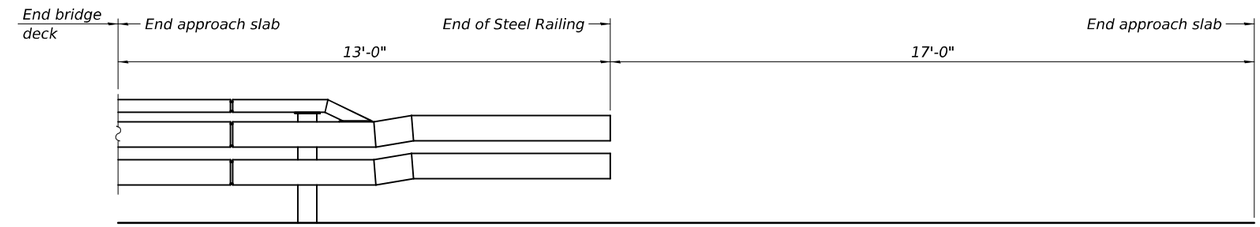

INSIDE ELEVATION OF RAILING

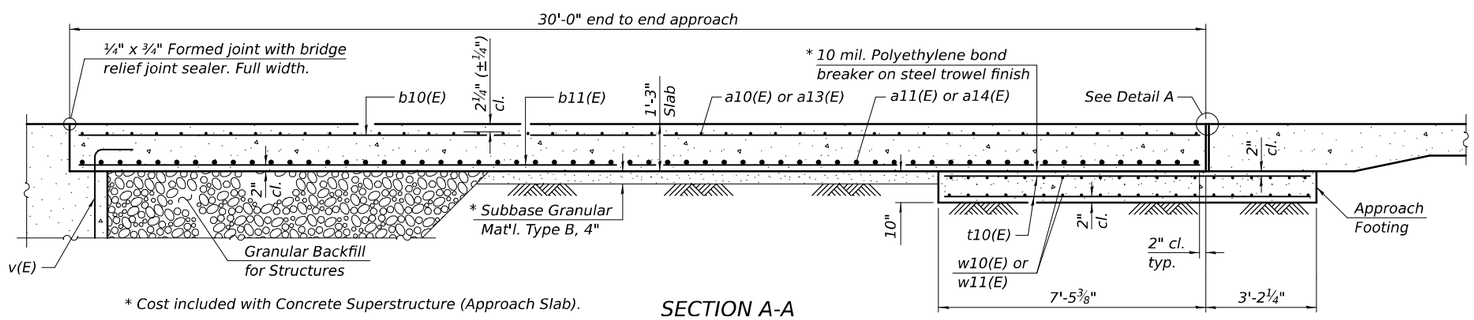

* Cost included with Concrete Superstructure (Approach Slab).

SECTION A-A

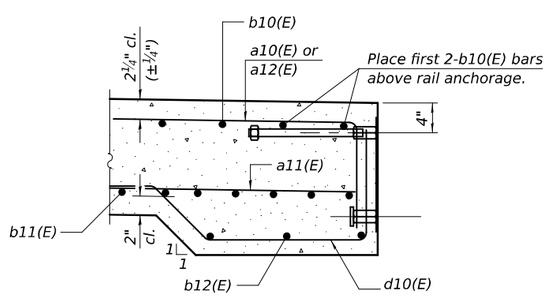

SECTION B-B

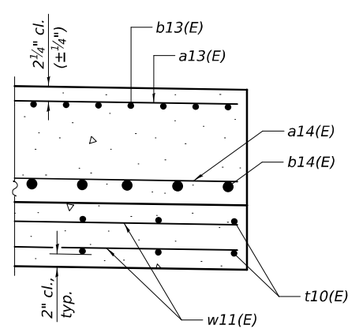

SECTION C-C

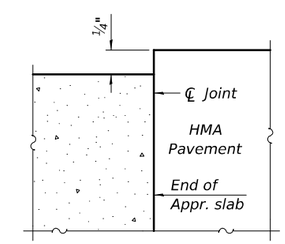

FLEXIBLE PAVEMENT

DETAIL A

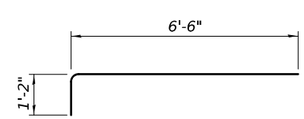

BAR a12(E)

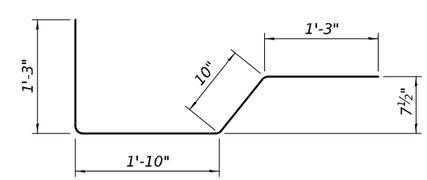

BAR d10(E)

TWO APPROACHES BILL OF MATERIAL

Bar	No.	Size	Length	Shape
a10(E)	141	#5	18'-10"	
a11(E)	186	#8	18'-10"	
a12(E)	48	#5	7'-8"	
a13(E)	31	#5	22'-7"	
a14(E)	42	#8	22'-7"	
b10(E)	112	#5	29'-8"	
b11(E)	172	#9	29'-8"	
b12(E)	12	#5	6'-8"	
b13(E)	6	#5	21'-7"	
b14(E)	9	#9	21'-7"	
d10(E)	28	#5	5'-2"	
t10(E)	158	#4	10'-4"	
w10(E)	120	#5	18'-10"	
w11(E)	40	#5	22'-7"	
Concrete Superstructure (Approach Slab)			Cu. Yd.	105.4
Concrete Structures			Cu. Yd.	24.8
Reinforcement Bars, Epoxy Coated			Pound	42,000

MODEL: 0530194-66L79-014
FILE NAME: pw://ildot-pw.bentley.com:PWIDOT/Documents/IDOT Offices/Bureau of Bridges and Structures/OBM Projects/0530194/CADData/Bridge/0530194-66L79-Design.dgn
10/7/2024 10:52:48 AM

DESIGNED - RYAN P. NEGANGARD	EXAMINED	DATE - 10/4/2024	
CHECKED - TIFFANY L. ADAMS	ENGINEER OF BRIDGE DESIGN		
DRAWN - DENNIS A. POP	PASSED	REVISED -	
CHECKED - R.P.N. / T.L.A.	ENGINEER OF BRIDGES AND STRUCTURES	REVISED -	

STATE OF ILLINOIS
DEPARTMENT OF TRANSPORTATION

BRIDGE APPROACH SLAB DETAILS
STRUCTURE NO. 053-0194

SHEET 14 OF 29 SHEETS

F.A.P. RTE.	SECTION	COUNTY	TOTAL SHEETS	SHEET NO.
673	(112BR)ES	LIVINGSTON	65	36
		CONTRACT NO. 66L79		
	ILLINOIS	FED. AID PROJECT		

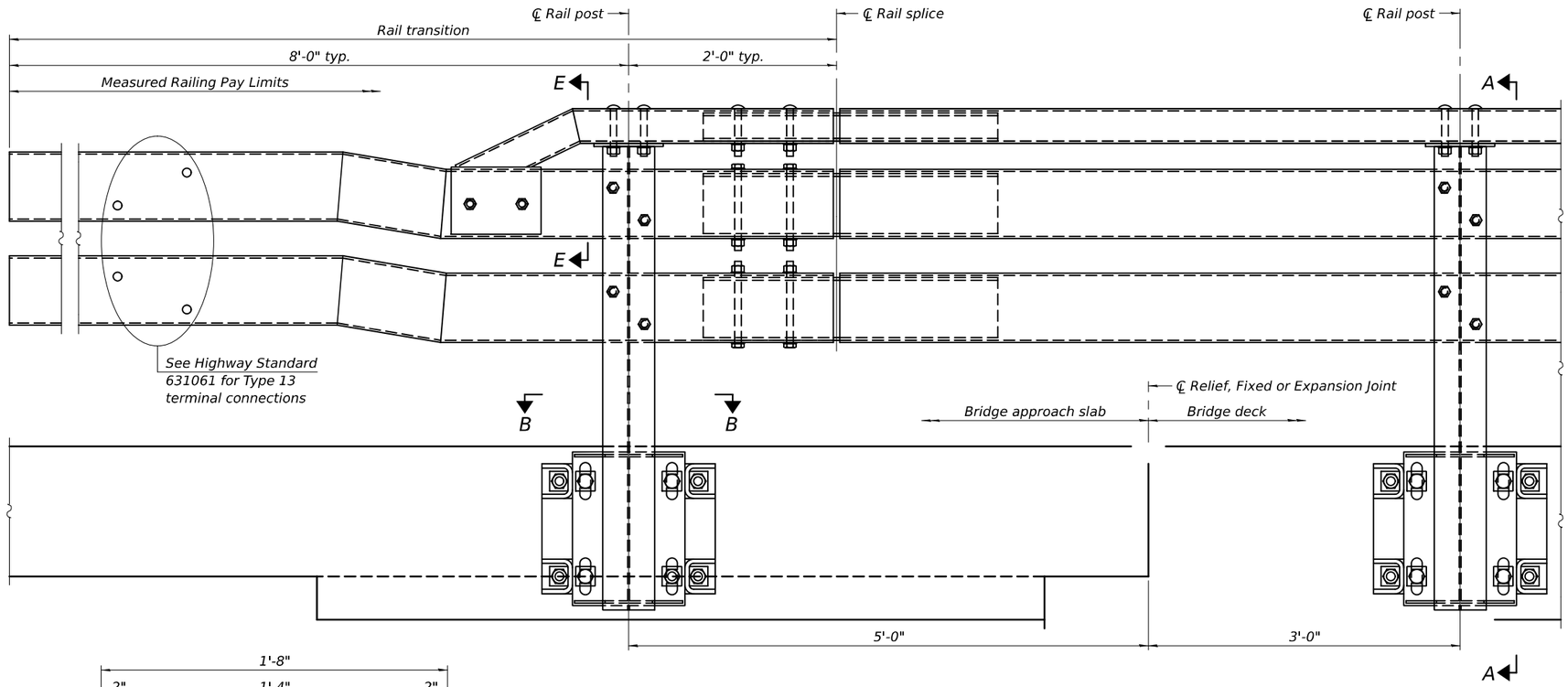

OUTSIDE ELEVATION OF RAIL

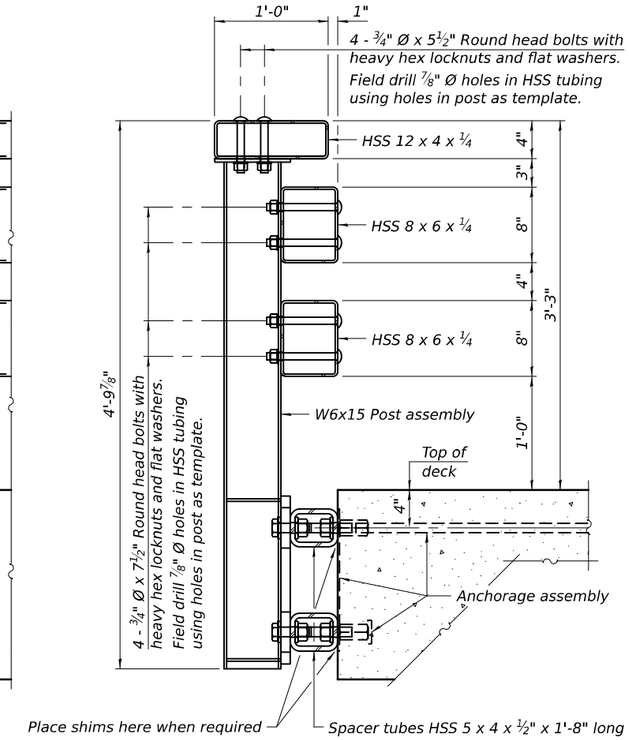

SECTION A-A

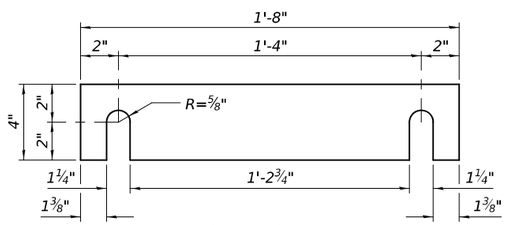

SHIM PLATE

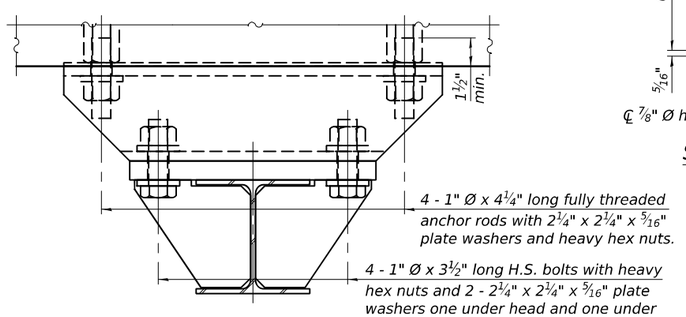

SECTION B-B

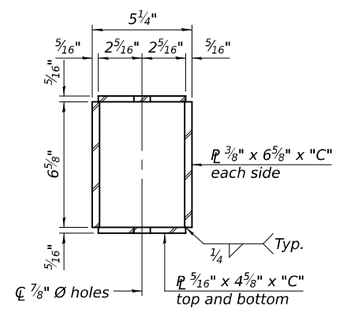

SECTION C-C

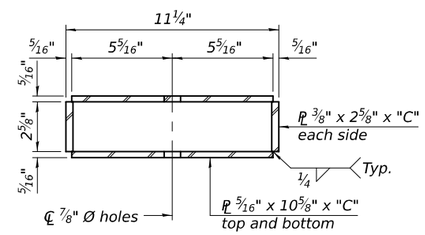

SECTION D-D

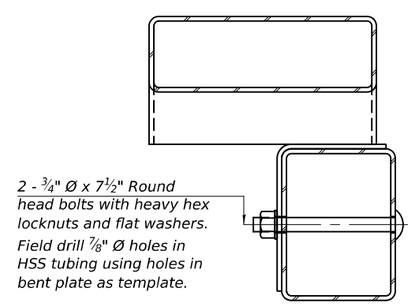

SECTION E-E

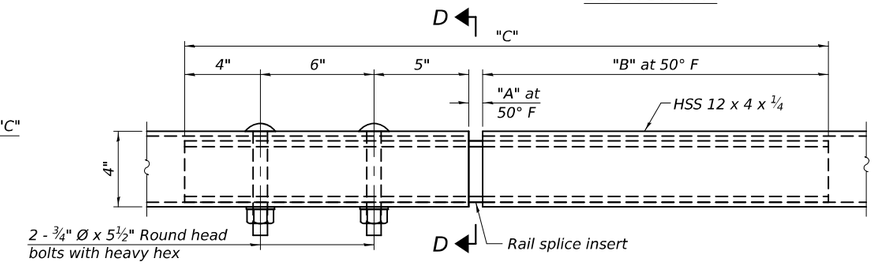

TOP RAIL SPLICE ELEVATION

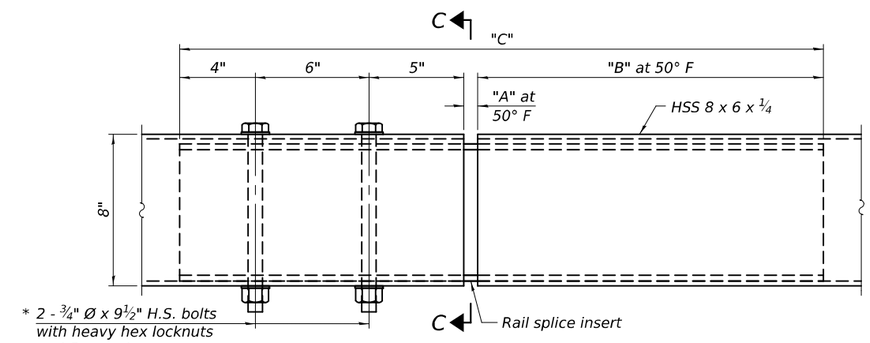

MIDDLE & BOTTOM RAIL SPLICE ELEVATION

* Bolt orientation shown for middle rail. Flip for bottom rail.

RAILING CRITERIA

MASH 2016 Test Level	4
Rail system weight (plf)	120
Max post spacing	8'-0"

SPLICE DIMENSIONS

Location	T	A	B	C
All locs. not over exp. jts.	0	½"	1'-6"	2'-9½"
Over Strip Seal Jt.	≤4"	2½"	1'-8"	3'-1½"
Over Finger or Modular Jt.	≤9½"	5½"	1'-10¾"	3'-7¼"
Over Finger or Modular Jt.	≤15"	8¼"	2'-1½"	4'-0¾"

T = ; total movement along centerline of roadway at expansion joint.

R-40BD 5-15-2023

(Sheet 1 of 4)

DESIGNED - RYAN P. NEGANGARD	EXAMINED	DATE - 10/4/2024	STATE OF ILLINOIS DEPARTMENT OF TRANSPORTATION
CHECKED - TIFFANY L. ADAMS	ENGINEER OF BRIDGE DESIGN		
DRAWN - DENNIS A. POP	PASSED	REVISED -	
CHECKED - R.P.N. / T.L.A.	ENGINEER OF BRIDGES AND STRUCTURES	REVISED -	

STEEL RAILING, TYPE IL-OH
STRUCTURE NO. 053-0194

SHEET 15 OF 29 SHEETS

F.A.P. RTE.	SECTION	COUNTY	TOTAL SHEETS	SHEET NO.
673	(112BR)ES	LIVINGSTON	65	37

CONTRACT NO. 66L79

ILLINOIS FED. AID PROJECT

MODEL: 0530194-66L79-015
FILE NAME: pw://ildot-pw.bentley.com:PWIDOT/Documents/IDOT Offices/Bureau of Bridges and Structures/OBM Projects/0530194/CADData/Bridge/0530194-66L79-Design.dgn
10/7/2024 10:52:49 AM

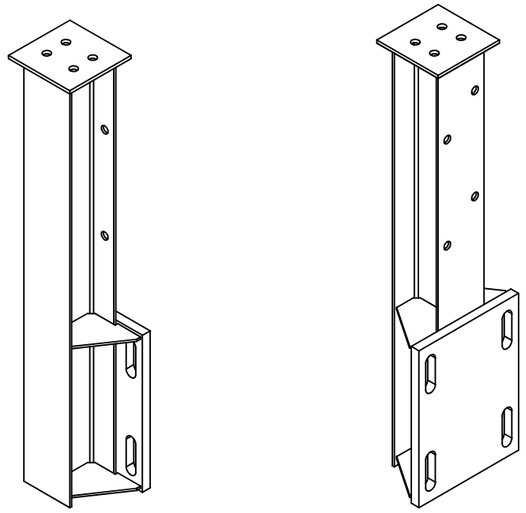

ISOMETRIC VIEWS POST ASSEMBLY

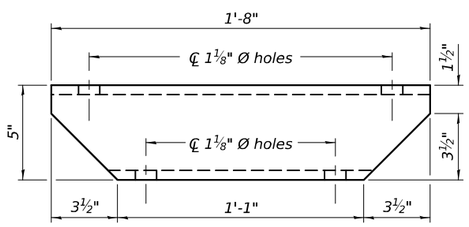

SPACER TUBE PLAN

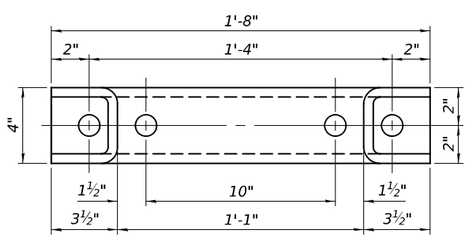

SPACER TUBE ELEVATION

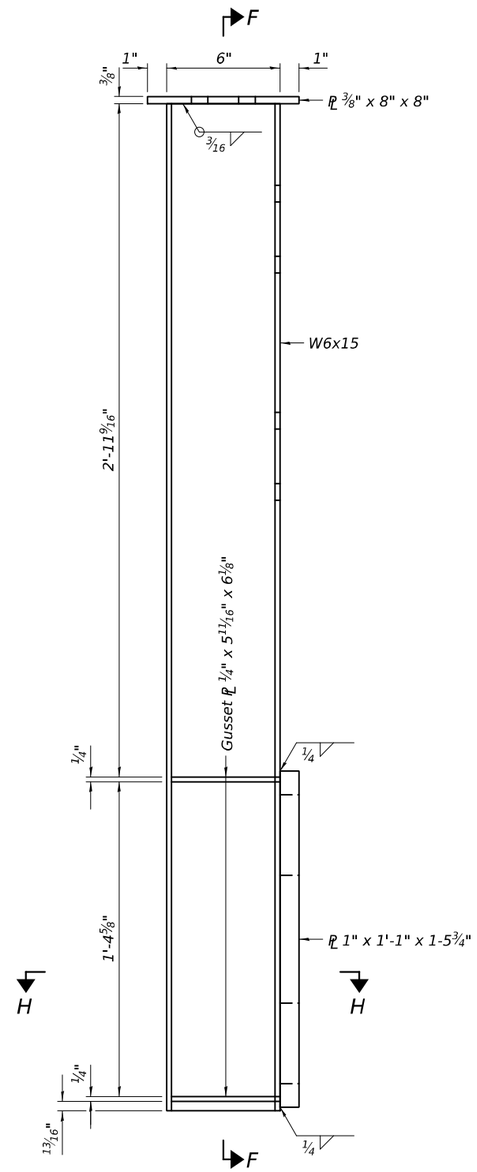

SIDE ELEVATION POST ASSEMBLY

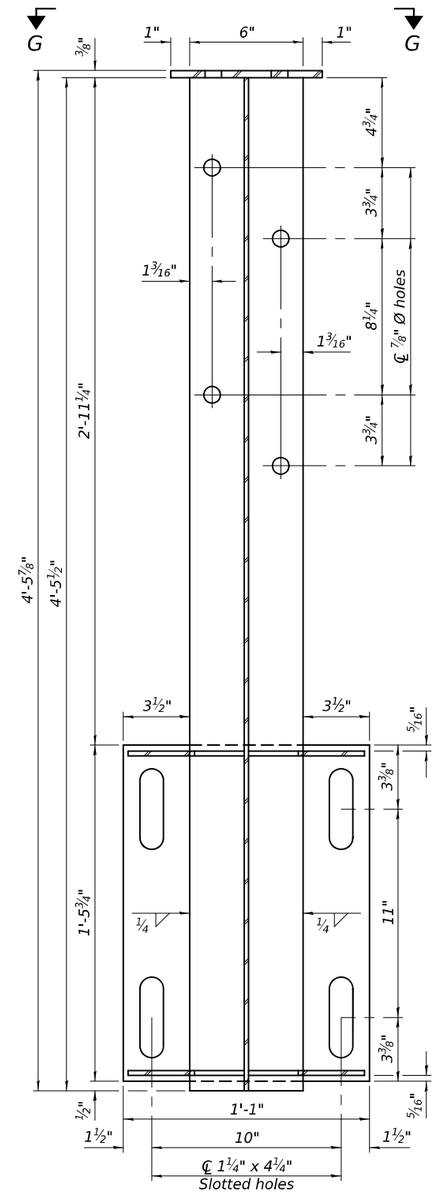

SECTION F-F

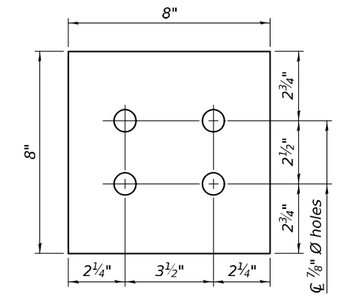

VIEW G-G
(Showing top plate)

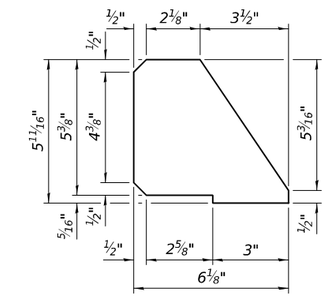

GUSSET PLATE

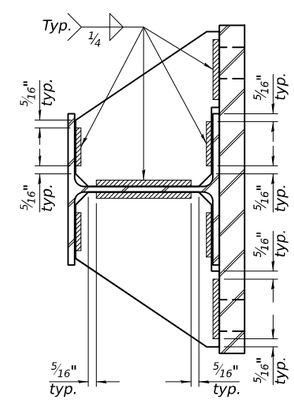

SECTION H-H
(Showing gusset plate welds)

R-40BD 5-15-2023

(Sheet 2 of 4)

DESIGNED - RYAN P. NEGANGARD	EXAMINED		DATE - 10/4/2024	STATE OF ILLINOIS DEPARTMENT OF TRANSPORTATION	STEEL RAILING, TYPE IL-OH STRUCTURE NO. 053-0194
CHECKED - TIFFANY L. ADAMS		ENGINEER OF BRIDGE DESIGN			
DRAWN - DENNIS A. POP	PASSED		REVISED -		
CHECKED - R.P.N. / T.L.A.		ENGINEER OF BRIDGES AND STRUCTURES	REVISED -		SHEET 16 OF 29 SHEETS

F.A.P. RTE.	SECTION	COUNTY	TOTAL SHEETS	SHEET NO.
673	(112BR)ES	LIVINGSTON	65	38
		CONTRACT NO. 66L79		
		ILLINOIS	FED. AID PROJECT	

MODEL: 05301946L79-016
FILE NAME: pw://ildot-pw.bentley.com:PWIDOT/Documents/IDOT O ces/Bureau of Bridges and Structures/OBM Projects/05301 94/CADData/Bridge/05301 94-66L79-Design.dgn
10/7/2024 10:52:49 AM

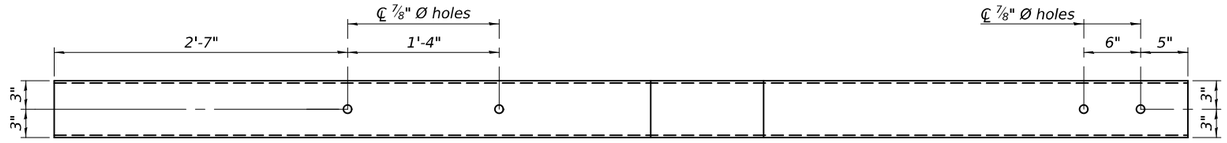

PLAN OF MIDDLE AND BOTTOM RAIL TRANSITION

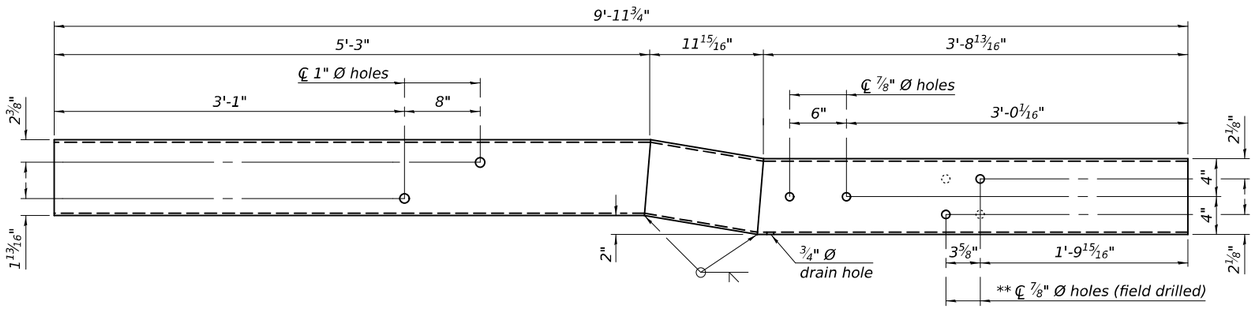

INSIDE ELEVATION OF LEFT MIDDLE RAIL TRANSITION

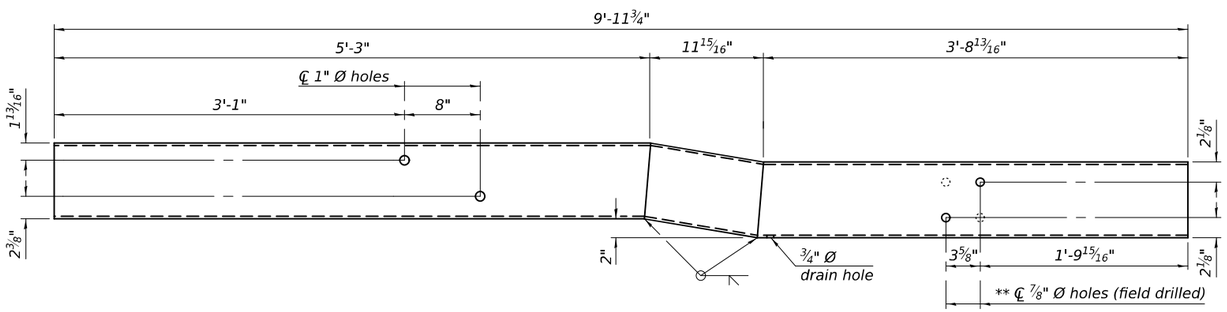

INSIDE ELEVATION OF LEFT BOTTOM RAIL TRANSITION

** Hole orientation is flipped as shown with the dashed holes for the right side piece.

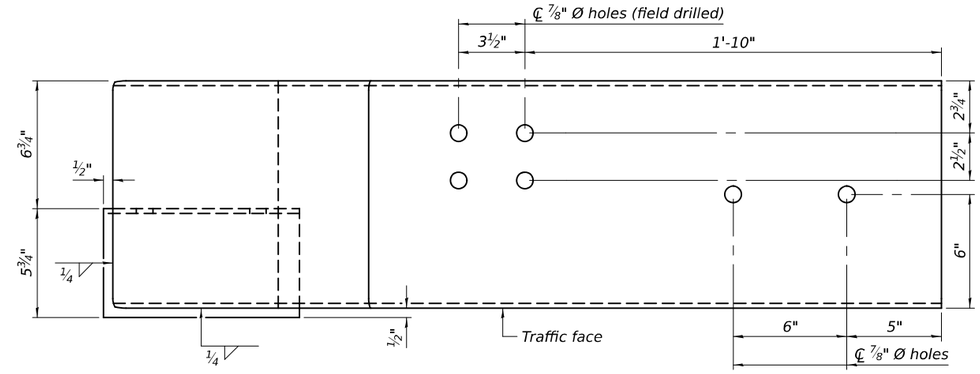

PLAN OF LEFT TOP RAIL TERMINATION ASSEMBLY

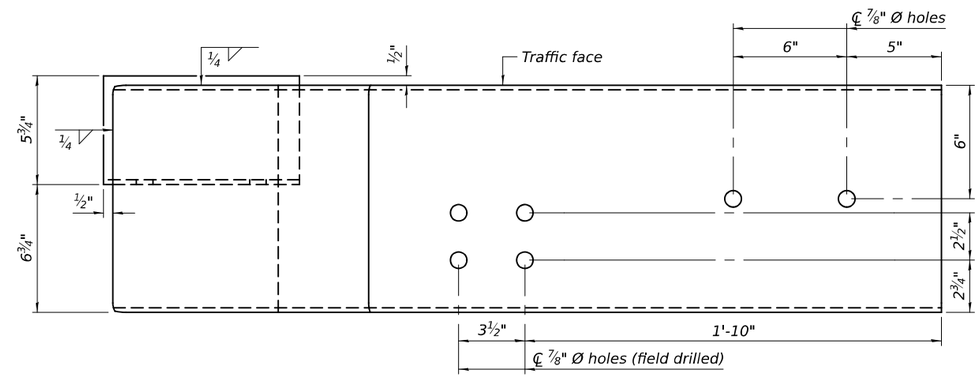

PLAN OF RIGHT TOP RAIL TERMINATION ASSEMBLY

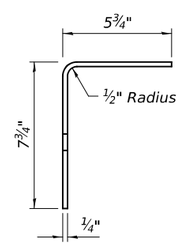

VIEW I-I

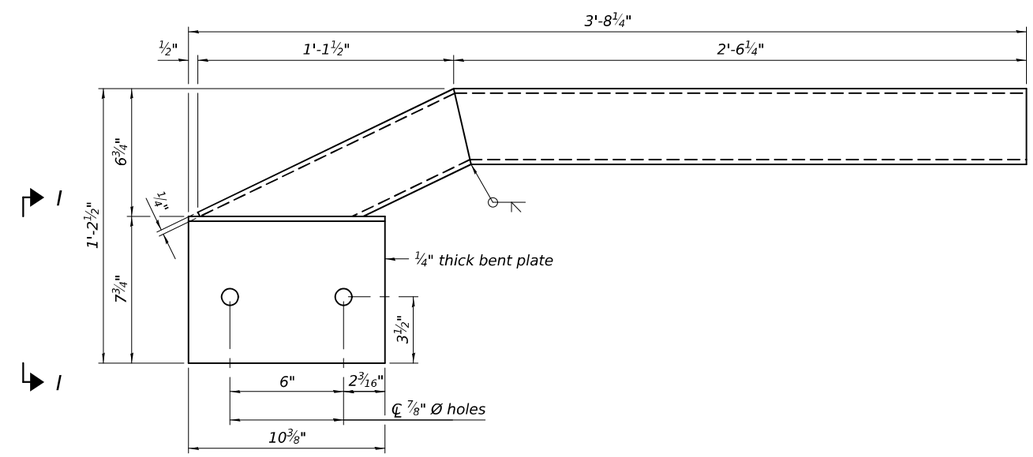

INSIDE ELEVATION OF LEFT TOP RAIL TERMINATION ASSEMBLY

(Right Similar)

R-40BD 5-15-2023

(Sheet 3 of 4)

DESIGNED - RYAN P. NEGANGARD	EXAMINED	ENGINEER OF BRIDGE DESIGN	DATE - 10/4/2024	STATE OF ILLINOIS DEPARTMENT OF TRANSPORTATION	STEEL RAILING, TYPE IL-OH STRUCTURE NO. 053-0194
CHECKED - TIFFANY L. ADAMS					
DRAWN - DENNIS A. POP	PASSED	ENGINEER OF BRIDGES AND STRUCTURES	REVISED -		
CHECKED - R.P.N. / T.L.A.			REVISED -		SHEET 17 OF 29 SHEETS

F.A.P. RTE.	SECTION	COUNTY	TOTAL SHEETS	SHEET NO.
673	(112BR)ES	LIVINGSTON	65	39
		CONTRACT NO. 66L79		
		ILLINOIS	FED. AID PROJECT	

MODEL: 0530194-66L79-017
FILE NAME: pw://ildot-pw.bentley.com:PWIDOT/Documents/IDOT O ces/Bureau of Bridges and Structures/OBM Projects/0530194/CADData/Bridge/0530194-66L79-Design.dgn
10/7/2024 10:52:50 AM

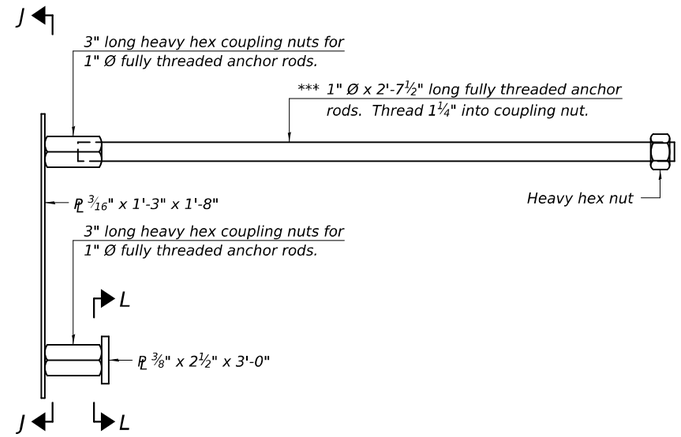

ANCHORAGE ASSEMBLY

*** For skewed bridge decks use 1" Ø x 1'-3" long fully threaded anchor rods at acute corners of bridge deck.

Notes:

All plates shall be AASHTO M270 grade 50.

All HSS tubing shall be ASTM A500 grade C.

All heavy hex nuts including heavy hex coupling nuts shall be according to ASTM A563 grade DH.

All fully threaded anchor rods shall be ASTM F1554 grade 105.

All round head bolts shall be ASTM A449.

All steel rail elements including shims shall be galvanized according to Article 509.05 of the Standard Specifications.

Rail splice inserts may be built out of 2 – 3/8" bent plates in lieu of the 4 plate rail splice inserts shown, provided the outside dimensions are matched.

A sufficient number shims of various thicknesses, built to the dimensions shown in the shim plate detail, shall be provided to adjust posts for plumbness and horizontal alignment. Cost included with Steel Railing, Type IL-OH.

The spacer tubes shall be fastened to the bridge deck and bridge approach slab snug tight and given an additional 1/3 turn. The 1" diameter high strength bolts used to connect the spacer tubes to the post assemblies shall be tightened according to Article 505.04(f)(2) of the Standard Specifications.

All HSS tubing serving as railing shall be CVN tested according to Article 1006.34(b) of the Standard Specifications.

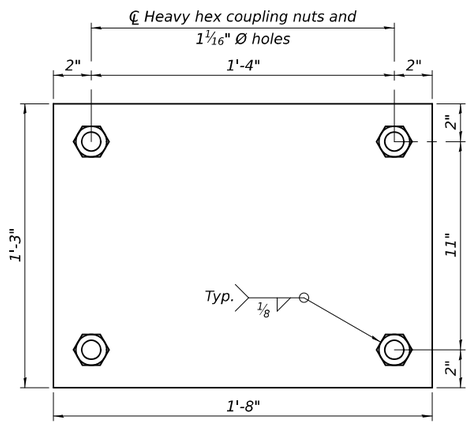

SECTION J-J

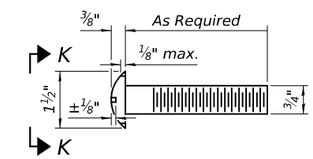

ROUND HEAD BOLT DETAIL

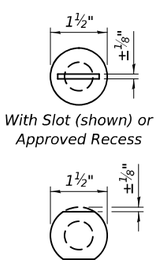

VIEW K-K

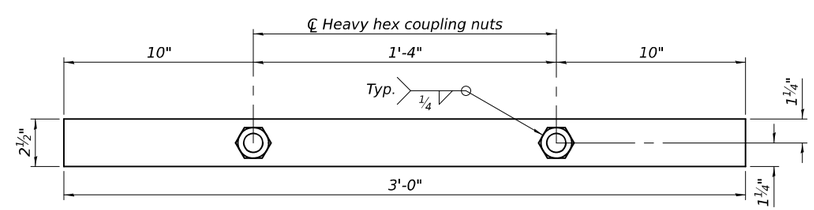

SECTION L-L

BILL OF MATERIAL

Item	Unit	Quantity
Steel Railing, Type IL-OH	Foot	225

R-40BD 5-15-2023

(Sheet 4 of 4)

DESIGNED - RYAN P. NEGANGARD	EXAMINED	DATE - 10/4/2024	
CHECKED - TIFFANY L. ADAMS	ENGINEER OF BRIDGE DESIGN		
DRAWN - DENNIS A. POP	PASSED	REVISED -	
CHECKED - R.P.N. / T.L.A.	ENGINEER OF BRIDGES AND STRUCTURES	REVISED -	

STATE OF ILLINOIS
DEPARTMENT OF TRANSPORTATION

STEEL RAILING, TYPE IL-OH
STRUCTURE NO. 053-0194

SHEET 18 OF 29 SHEETS

F.A.P. RTE.	SECTION	COUNTY	TOTAL SHEETS	SHEET NO.
673	(112BR)ES	LIVINGSTON	65	40

CONTRACT NO. 66L79

ILLINOIS FED. AID PROJECT

MODEL: 0530194-66L79-018
FILE NAME: pw://ildot-pw.bentley.com:PWIDOT/Documents/IDOT Offices/Bureau of Bridges and Structures/OBM Projects/0530194/CADData/Bridge/0530194-66L79-Design.dgn

10/7/2024 10:52:51 AM

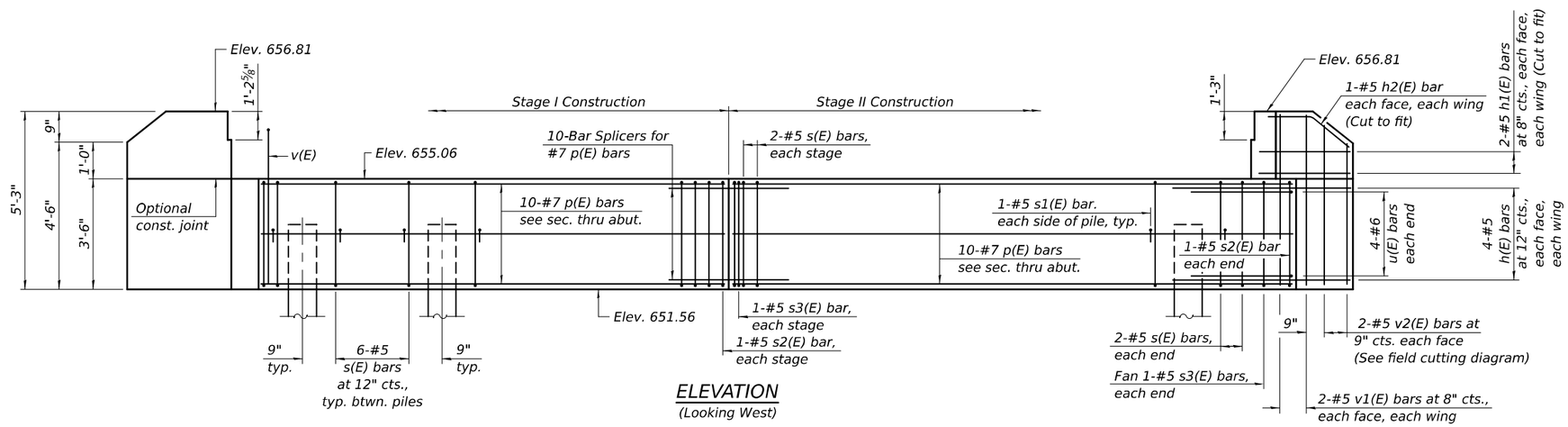

ELEVATION
(Looking West)

Note:
See sheet 21 of 29 for additional details, notes and Bill of Material.

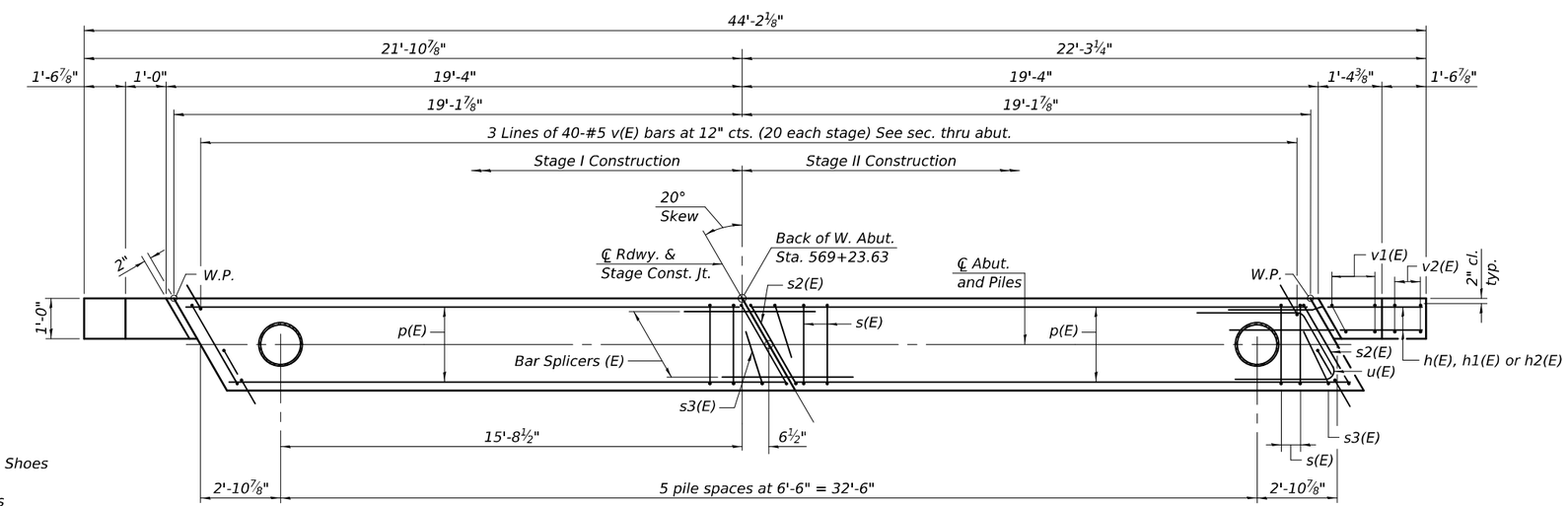

PLAN

PILE DATA

Type: Metal Shell 14" x 0.312" with Pile Shoes
Nominal Required Bearing: 240 kips
Factored Resistance Available: 132 kips
Est. Length: 26'
No. Production Piles: 5
No. Test Piles: 1

DESIGNED - RYAN P. NEGANGARD	EXAMINED	DATE - 10/4/2024	STATE OF ILLINOIS DEPARTMENT OF TRANSPORTATION
CHECKED - TIFFANY L. ADAMS	ENGINEER OF BRIDGE DESIGN		
DRAWN - DENNIS A. POP	PASSED	REVISED -	
CHECKED - R.P.N. / T.L.A.	ENGINEER OF BRIDGES AND STRUCTURES	REVISED -	

WEST ABUTMENT
STRUCTURE NO. 053-0194

SHEET 19 OF 29 SHEETS

F.A.P. RTE.	SECTION	COUNTY	TOTAL SHEETS	SHEET NO.
673	(112BR)ES	LIVINGSTON	65	41
		CONTRACT NO. 66L79		
		ILLINOIS	FED. AID PROJECT	

MODEL: 0530194-66L79-019
FILE NAME: pw://ildot-pw.bentley.com:PWIDOT/Documents/IDOT O ces/Bureau of Bridges and Structures/OBM Projects/0530194/CADData/Bridge/0530194-66L79-Design.dgn
10/7/2024 10:52:52 AM

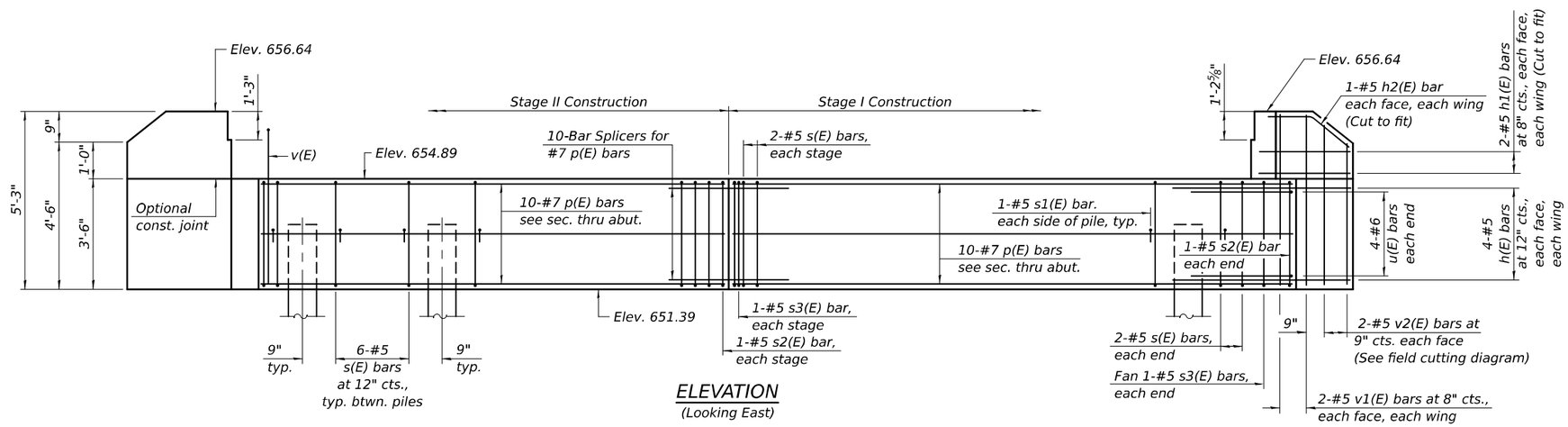

ELEVATION
(Looking East)

Note:
See sheet 21 of 29 for additional details, notes and Bill of Material.

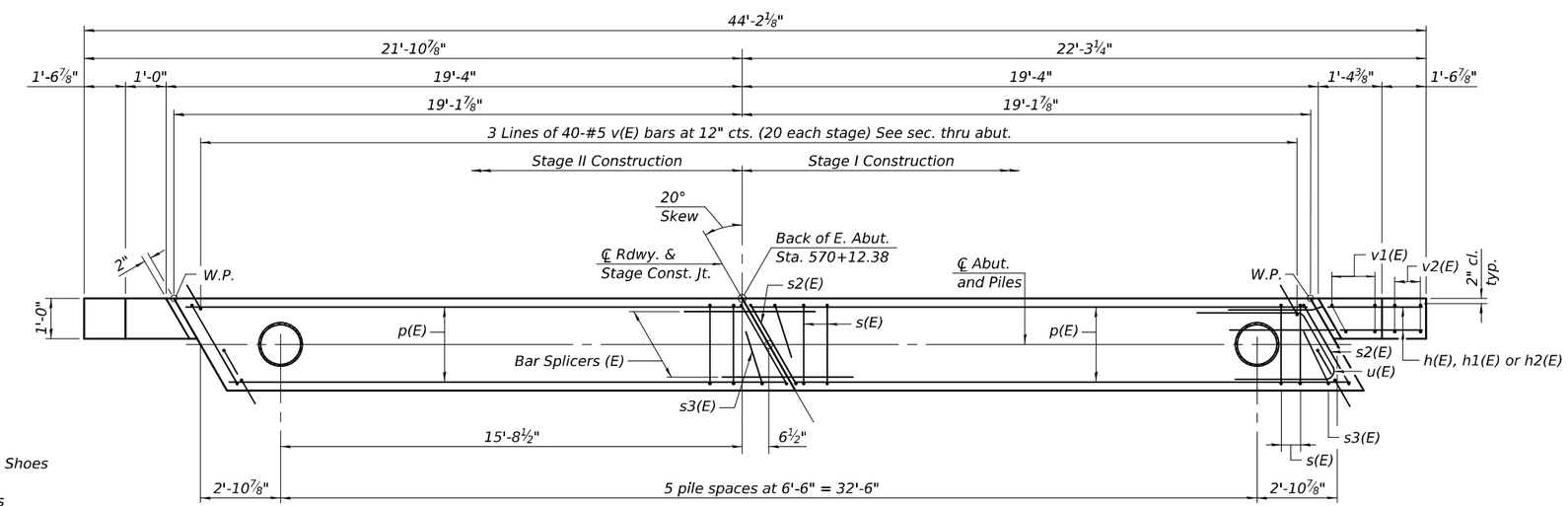

PLAN

PILE DATA
Type: Metal Shell 14" x 0.312" with Pile Shoes
Nominal Required Bearing: 240 kips
Factored Resistance Available: 132 kips
Est. Length: 35'
No. Production Piles: 5
No. Test Piles: 1

DESIGNED - RYAN P. NEGANGARD	EXAMINED	DATE - 10/4/2024	
CHECKED - TIFFANY L. ADAMS	ENGINEER OF BRIDGE DESIGN		
DRAWN - DENNIS A. POP	PASSED	REVISED -	
CHECKED - R.P.N. / T.L.A.	ENGINEER OF BRIDGES AND STRUCTURES	REVISED -	

STATE OF ILLINOIS
DEPARTMENT OF TRANSPORTATION

EAST ABUTMENT
STRUCTURE NO. 053-0194

SHEET 20 OF 29 SHEETS

F.A.P. RTE.	SECTION	COUNTY	TOTAL SHEETS	SHEET NO.
673	(112BR)ES	LIVINGSTON	65	42

CONTRACT NO. 66L79

ILLINOIS | FED. AID PROJECT

MODEL: 0530194-66L79-020
FILE NAME: pw://ildot-pw.bentley.com:PWIDOT/Documents/IDOT O ces/Bureau of Bridges and Structures/OBM Projects/0530194/CADData/Bridge/0530194-66L79-Design.dgn
10/7/2024 10:52:52 AM

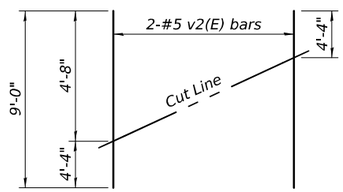

FIELD CUTTING DIAGRAM

Order v2(E) full length. Cut as shown and use remainder of bars in opposite wing.

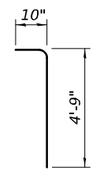

BAR v(E)

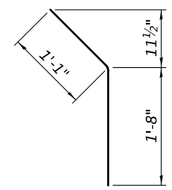

BAR h2(E)

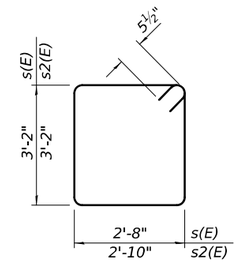

BAR s(E) & s2(E)

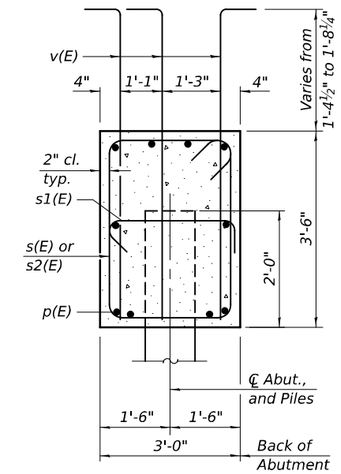

SEC. THRU ABUT.

Dimensions at right angles to abutment.

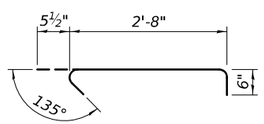

BAR s1(E)

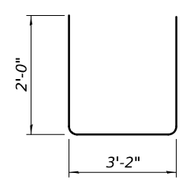

BAR s3(E)

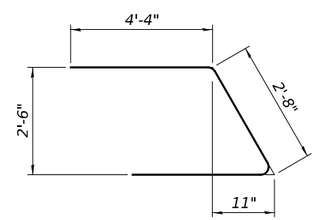

BAR u(E)

WEST ABUTMENT BILL OF MATERIAL

Bar	No.	Size	Length	Shape
h(E)	16	#5	6'-6"	
h1(E)	8	#5	2'-7"	
h2(E)	4	#5	2'-9"	
p(E)	20	#7	18'-10"	
s(E)	32	#5	12'-7"	
s1(E)	12	#5	3'-8"	
s2(E)	4	#5	12'-11"	
s3(E)	4	#5	7'-2"	
u(E)	8	#6	11'-4"	
v(E)	120	#5	5'-7"	
v1(E)	8	#5	4'-11"	
v2(E)	4	#5	9'-0"	
Structure Excavation			Cu. Yd.	56
Concrete Structures			Cu. Yd.	16.0
Reinforcement Bars, Epoxy Coated			Pound	2,370
Furnishing Metal Shell Piles 14" x 0.312"			Foot	130
Driving Piles			Foot	130
Test Pile Metal Shells			Each	1
Pile Shoes			Each	6

For details of piles see sheet 24 of 29.

EAST ABUTMENT BILL OF MATERIAL

Bar	No.	Size	Length	Shape
h(E)	16	#5	6'-6"	
h1(E)	8	#5	2'-7"	
h2(E)	4	#5	2'-9"	
p(E)	20	#7	18'-10"	
s(E)	32	#5	12'-7"	
s1(E)	12	#5	3'-8"	
s2(E)	4	#5	12'-11"	
s3(E)	4	#5	7'-2"	
u(E)	8	#6	11'-4"	
v(E)	120	#5	5'-7"	
v1(E)	8	#5	4'-11"	
v2(E)	4	#5	9'-0"	
Structure Excavation			Cu. Yd.	56
Concrete Structures			Cu. Yd.	16.0
Reinforcement Bars, Epoxy Coated			Pound	2,370
Furnishing Metal Shell Piles 14" x 0.312"			Foot	175
Driving Piles			Foot	175
Test Pile Metal Shells			Each	1
Pile Shoes			Each	6

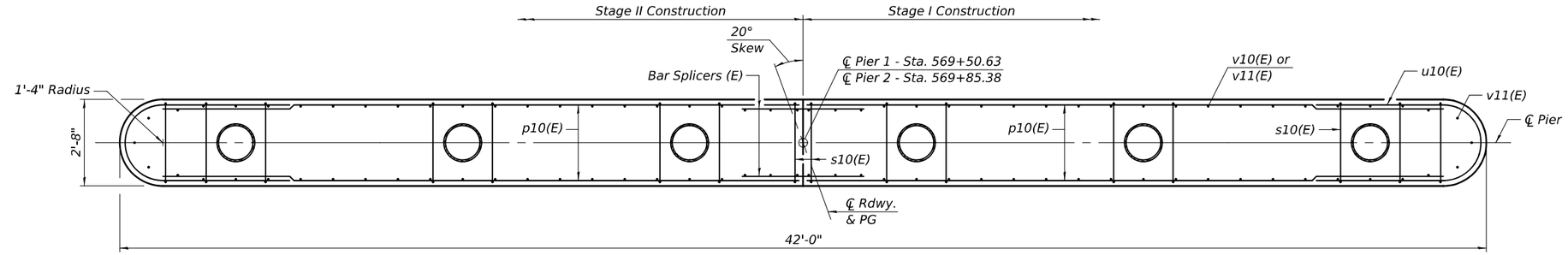

PLAN

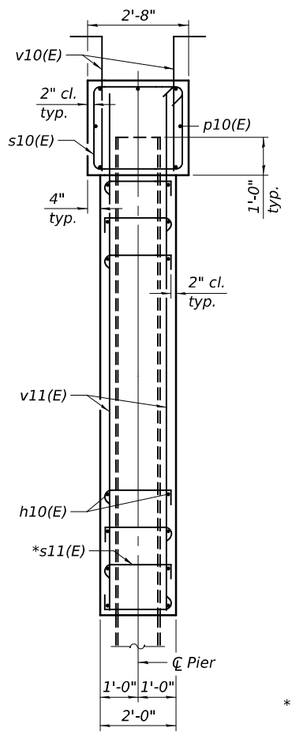

SECTION THRU PIER

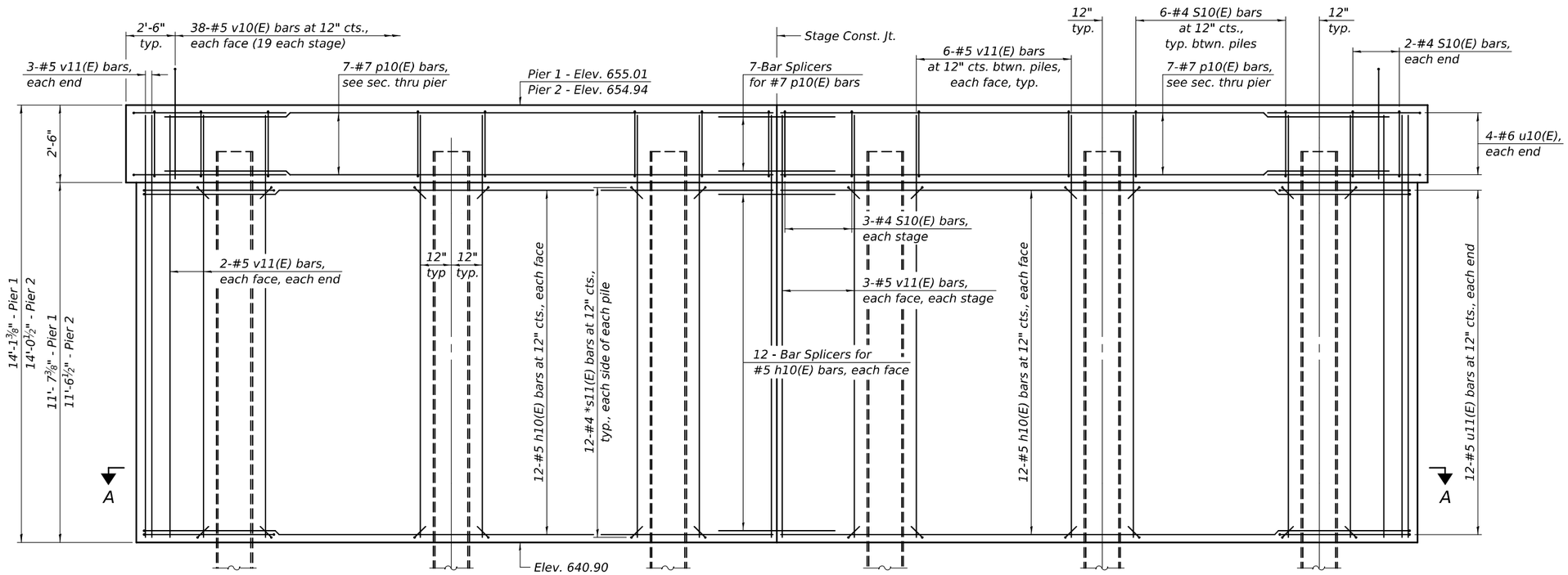

ELEVATION
(Looking East)

* Hook s11(E) bar around h10(E) and v11(E) bars.

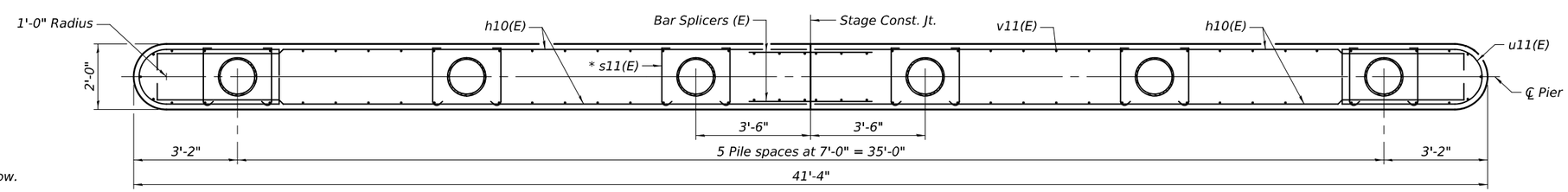

SECTION A-A

Notes:
See sheet 23 of 29 for additonal pier details and Bill of Material.
See sheet 24 of 29 for details of piles.
Alternate s11(E) bar 135° end every other row.

MODEL: 0530194-66L79-022
FILE NAME: pw://ildot-pw.bentley.com:PWIDOT/Documents/IDOT O ces/Bureau of Bridges and Structures/OBM Projects/0530194/CADData/Bridge/0530194-66L79-Design.dgn
10/7/2024 10:52:54 AM

DESIGNED - RYAN P. NEGANGARD	EXAMINED	DATE - 10/4/2024	
CHECKED - TIFFANY L. ADAMS	ENGINEER OF BRIDGE DESIGN		
DRAWN - DENNIS A. POP	PASSED	REVISED -	
CHECKED - R.P.N. / T.L.A.	ENGINEER OF BRIDGES AND STRUCTURES	REVISED -	

STATE OF ILLINOIS
DEPARTMENT OF TRANSPORTATION

PIERS
STRUCTURE NO. 053-0194
SHEET 22 OF 29 SHEETS

F.A.P. RTE.	SECTION	COUNTY	TOTAL SHEETS	SHEET NO.
673	(112BR)ES	LIVINGSTON	65	44
		CONTRACT NO. 66L79		
		ILLINOIS	FED. AID PROJECT	

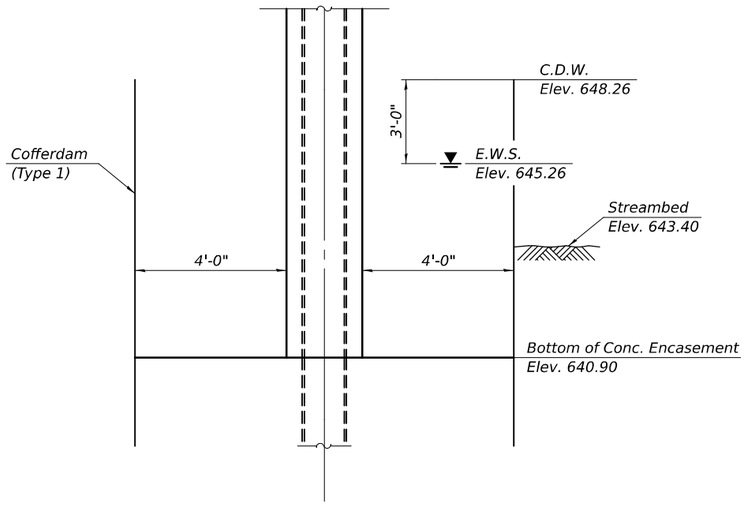

COFFERDAM DETAIL

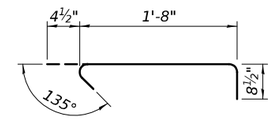

BAR s11(E)

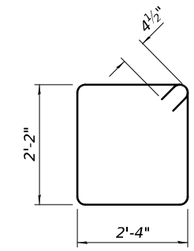

BAR s10(E)

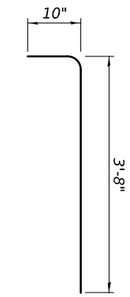

BAR v10(E)

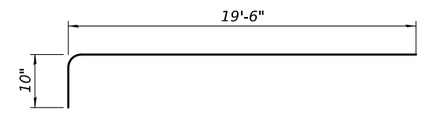

BAR h10(E)

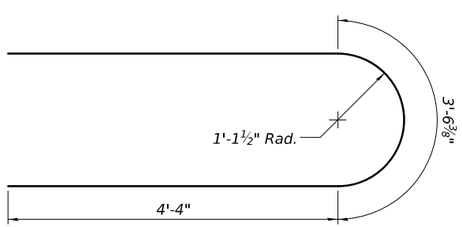

BAR u10(E)

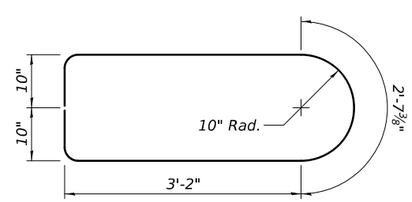

BAR u11(E)

PIER 1
BILL OF MATERIAL

Bar	No.	Size	Length	Shape
h10(E)	48	#5	20'-4"	
p10(E)	14	#7	19'-6"	
s10(E)	34	#4	9'-9"	
s11(E)	144	#4	2'-9"	
u10(E)	8	#6	12'-3"	
u11(E)	24	#5	10'-8"	
v10(E)	76	#5	4'-6"	
v11(E)	74	#5	13'-9"	
Cofferdam Excavation			Cu. Yd.	67.0
Cofferdam (Type 1) (Location - 1)			Each	1
Concrete Structures			Cu. Yd.	45.4
Reinforcement Bars, Epoxy Coated			Pound	3,890
Furnishing Metal Shell Piles 14" x 0.312"			Foot	165
Driving Piles			Foot	165
Test Pile Metal Shells			Each	1
Pile Shoes			Each	6

PIER 2
BILL OF MATERIAL

Bar	No.	Size	Length	Shape
h10(E)	48	#5	20'-4"	
p10(E)	14	#7	19'-6"	
s10(E)	34	#4	9'-9"	
s11(E)	144	#4	2'-9"	
u10(E)	8	#6	12'-3"	
u11(E)	24	#5	10'-8"	
v10(E)	76	#5	4'-6"	
v11(E)	74	#5	13'-9"	
Cofferdam Excavation			Cu. Yd.	65.0
Cofferdam (Type 1) (Location - 2)			Each	1
Concrete Structures			Cu. Yd.	45.2
Reinforcement Bars, Epoxy Coated			Pound	3,890
Furnishing Metal Shell Piles 14" x 0.312"			Foot	200
Driving Piles			Foot	200
Test Pile Metal Shells			Each	1
Pile Shoes			Each	6

PIER 1 - PILE DATA

Type: Metal Shell 14" x 0.312" with Pile Shoes
Nominal Required Bearing: 342 kips
Factored Resistance Available: 188 kips
Est. Length: 33'
No. Production Piles: 5
No. Test Piles: 1

PIER 2 - PILE DATA

Type: Metal Shell 14" x 0.312" with Pile Shoes
Nominal Required Bearing: 342 kips
Factored Resistance Available: 188 kips
Est. Length: 40'
No. Production Piles: 5
No. Test Piles: 1

MODEL: 0530194-66L79-023
FILE NAME: pw://ildot-pw.bentley.com:PWIDOT/Documents/IDOT O ces/Bureau of Bridges and Structures/OBM Projects/0530194/CADData/Bridge/0530194-66L79-Design.dgn
10/7/2024 10:52:55 AM

DESIGNED -	RYAN P. NEGANGARD	EXAMINED	ENGINEER OF BRIDGE DESIGN
CHECKED -	TIFFANY L. ADAMS		
DRAWN -	DENNIS A. POP	PASSED	ENGINEER OF BRIDGES AND STRUCTURES
CHECKED -	R.P.N. / T.L.A.		

DATE - 10/4/2024
REVISED -
REVISED -

STATE OF ILLINOIS
DEPARTMENT OF TRANSPORTATION

PIER DETAILS
STRUCTURE NO. 053-0194

SHEET 23 OF 29 SHEETS

F.A.P. RTE.	SECTION	COUNTY	TOTAL SHEETS	SHEET NO.
673	(112BR)ES	LIVINGSTON	65	45

CONTRACT NO. 66L79
ILLINOIS FED. AID PROJECT

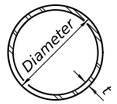

METAL SHELL PILE TABLE

Designation and outside diameter	Wall thickness t	Weight per foot (Lbs./ft.)	Inside volume (yd.³/ft.)
PP12	0.250"	31.40	0.0267
PP14	0.250"	36.75	0.0368
PP14	0.312"	45.65	0.0361
PP16	0.312"	52.32	0.0478
PP16	0.375"	62.64	0.0470

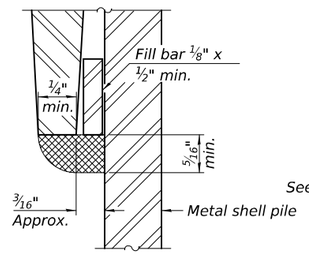

DETAIL A

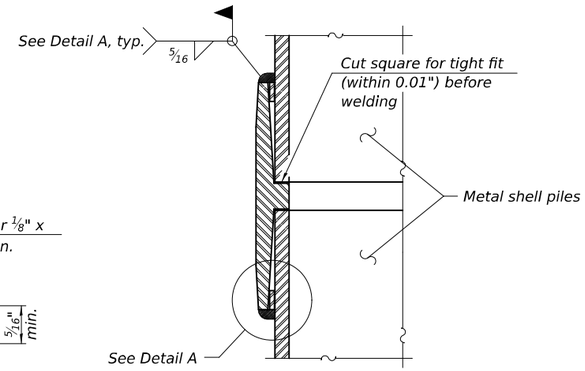

WELDED COMMERCIAL SPLICE

Notes:
The 1/8" x 1/2" min. fill bar may be constructed of 2 bars with a 1/8" max. gap between them.
Pile segments shall be driven to solid contact with splicer before welding.

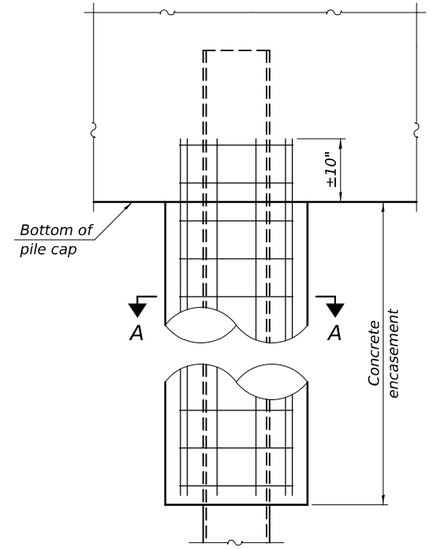

ELEVATION

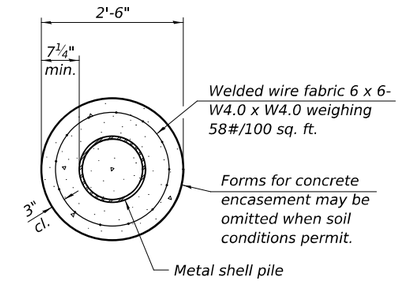

SECTION A-A

INDIVIDUAL PILE CONCRETE ENCASEMENT

(When specified)

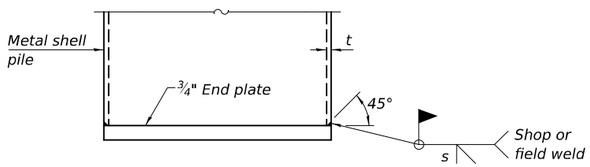

$s = t - \frac{1}{8}"$

END PLATE ATTACHMENT

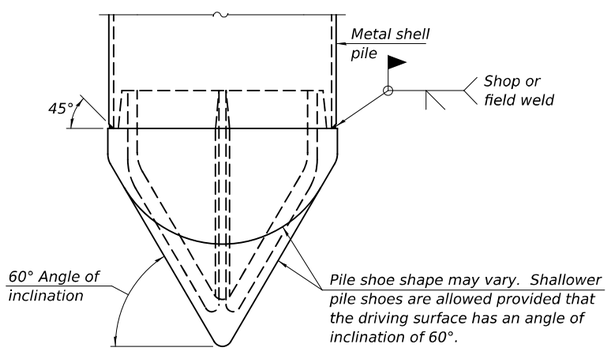

PILE SHOE ATTACHMENT

(When called for on the plans, the Contractor shall furnish metal shell pile shoes consisting of a single piece conical pile point as shown. The pile shoes shall be cast in one piece steel according to either ASTM A 148 Grade 80-50 or AASHTO M 103 Grade 65-35 and shall provide full bearing over the full circumference of the metal shell pile. The pile shoe shall have tapered leads to assure proper alignment and fitting and shall be secured to the pile with a circumferential weld).

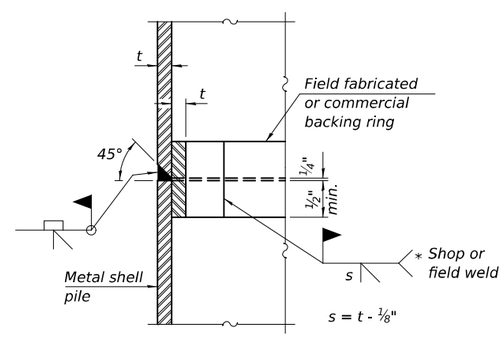

$s = t - \frac{1}{8}"$

COMPLETE PENETRATION WELD SPLICE

* Field fabricated backing ring may be made from pile shell by removing segment to allow reducing circumference and vertically rejoin with partial joint penetration weld.

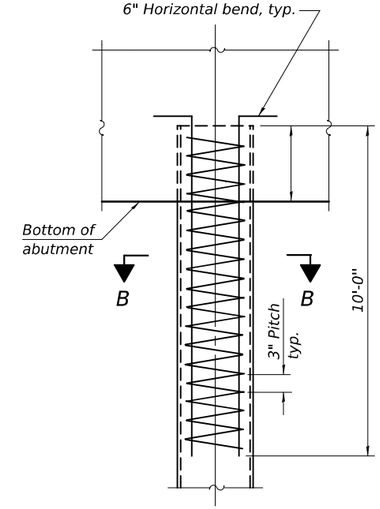

ELEVATION

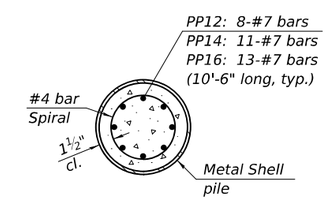

SECTION B-B

REINFORCEMENT AT ABUTMENTS

(Omit when concrete encasement is specified)

Note:
The metal shell piles shall be according to Article 1006.05 of the Standard Specifications.

F-MS 5-15-2023

DESIGNED - RYAN P. NEGANGARD	EXAMINED	DATE - 10/4/2024	STATE OF ILLINOIS DEPARTMENT OF TRANSPORTATION
CHECKED - TIFFANY L. ADAMS	ENGINEER OF BRIDGE DESIGN		
DRAWN - DENNIS A. POP	PASSED	REVISED -	
CHECKED - R.P.N. / T.L.A.	ENGINEER OF BRIDGES AND STRUCTURES	REVISED -	

METAL SHELL PILE DETAILS
STRUCTURE NO. 053-0194
SHEET 24 OF 29 SHEETS

F.A.P. RTE.	SECTION	COUNTY	TOTAL SHEETS	SHEET NO.
673	(112BR)ES	LIVINGSTON	65	46
		CONTRACT NO. 66L79		
	ILLINOIS	FED. AID PROJECT		

MODEL: 0530194-66L79-024
FILE NAME: pw://ildot-pw.bentley.com:PWIDOT/Documents/IDOT Offices/Bureau of Bridges and Structures/OBM Projects/0530194/CADData/Bridge/0530194-66L79-Design.dgn
10/7/2024 10:52:55 AM

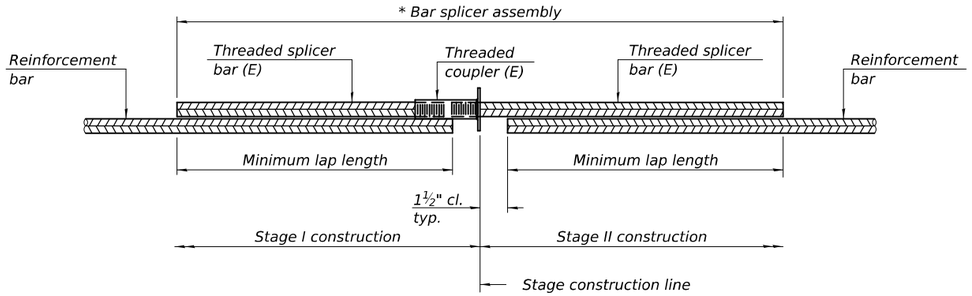

STANDARD BAR SPLICER ASSEMBLY PLAN

Only bar splicer assemblies as presented on the approved QPL list may be used.

Threaded splicer bar length = min. lap length + 1½" + thread length

* Epoxy not required on Bar Splicer Assembly components used in conjunction with black bars.

Location	Bar size	No. assemblies required	Minimum lap length
Slab Top	#6	199	5'-0"
Slab Bottom	#6	154	3'-7"
Over Abutment & Piers	#5	8	3'-0"
Approach Slab Top	#5	86	3'-4"
Approach Slab Bottom	#8	114	4'-9"
Approach Slab Footing	#5	80	3'-2"
Abutment Caps	#7	20	5'-0"
Pier Caps	#7	14	5'-0"
Pier Walls	#5	48	3'-7"

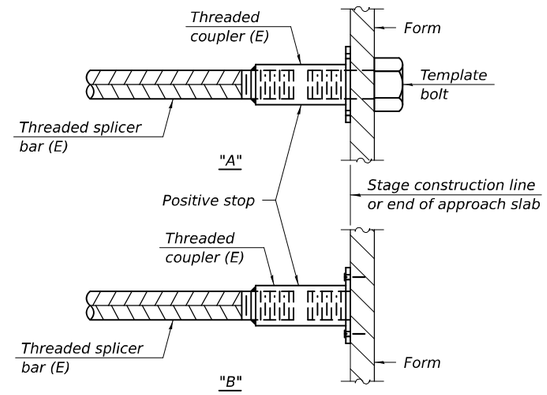

INSTALLATION AND SETTING METHODS

"A" : Set bar splicer assembly by means of a template bolt.
"B" : Set bar splicer assembly by nailing to wood forms or cementing to steel forms.
(E) : Indicates epoxy coating.

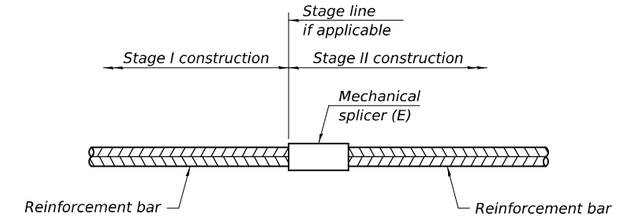

STANDARD MECHANICAL SPLICER

Location	Bar size	No. assemblies required

Notes:
Splicer bars shall be deformed with threaded ends and have a minimum 60 ksi yield strength.
All reinforcement shall be lapped and tied to the splicer bars.
Bar splicer assemblies shall be epoxy coated according to the requirements for reinforcement bars. See Section 508 of the Standard Specifications.
See approved list of bar splicer assemblies and mechanical splicers for alternatives.

BSD-1 5-15-2023

DESIGNED - RYAN P. NEGANGARD	EXAMINED	DATE - 10/4/2024	STATE OF ILLINOIS DEPARTMENT OF TRANSPORTATION
CHECKED - TIFFANY L. ADAMS	ENGINEER OF BRIDGE DESIGN		
DRAWN - DENNIS A. POP	PASSED	REVISED -	
CHECKED - R.P.N. / T.L.A.	ENGINEER OF BRIDGES AND STRUCTURES	REVISED -	

BAR SPLICER ASSEMBLY AND MECHANICAL SPLICER DETAILS
STRUCTURE NO. 053-0194
SHEET 25 OF 29 SHEETS

F.A.P. RTE.	SECTION	COUNTY	TOTAL SHEETS	SHEET NO.
673	(112BR)ES	LIVINGSTON	65	47
		CONTRACT NO. 66L79		
	ILLINOIS	FED. AID PROJECT		

MODEL: 0530194-66L79-025
FILE NAME: pw://ildot-pw.bentley.com:PWIDOT/Documents/IDOT Offices/Bureau of Bridges and Structures/OBM Projects/0530194/CADData/Bridge/0530194-66L79-Design.dgn
10/7/2024 10:52:56 AM

Illinois Department of Transportation
Division of Highways
Illinois Department of Transportation

SOIL BORING LOG

Page 1 of 1

Date 7/19/22

ROUTE FAP 673 (IL 116) DESCRIPTION IL 116 over Scattering Point Creek, 0.5 mi W of N 600 E Rd LOGGED BY Larry Myers

SECTION (112BR)ES LOCATION NE 1/4, SEC. 25, TWP. 28, RNG. 3E, 3rd PM, Latitude 40.87163, Longitude -88.82465

COUNTY Livingston DRILLING METHOD Hollow Stem Auger HAMMER TYPE CME Automatic

STRUCT. NO. 053-0062 (Exist.)
Station 569+68

BORING NO. 1 (SW Quad)
Station 569+08
Offset 17.3 ft Rt.
Ground Surface Elev. 656.55 ft

Surface Water Elev. ft
Stream Bed Elev. ft

Groundwater Elev.:
First Encounter 639.1 ft ▼
Upon Completion 640.6 ft ▽
After Hrs. ft

Description	Elev.	DEPTH (ft)	BLOWS (/6")	UCS Qu (tsf)	MOIST (%)
Augered Shoulder Stone and Black Silty Clay Loam Fill					
	654.05				
Stiff Black Silty Clay Loam Fill with Organics			3		
			3	1.5	26
			3	P	
		-5			
			2		
			2	1.3	36
			2	P	
			3		
			2	1.5	29
			2	P	
	646.55	-10			
Loose Sand			WH		
WH = Weight of Hammer			1		47
Concrete (Soft) @ 11'			20		
	644.05				
Very Stiff Gray Silty Clay Loam Till with Sand Layers, Silt Pockets			8		
			8	2.0	15
			10	P	
		-15			
			5		
▽			7	3.5	14
			8	S	
▼					
			3		
			4	2.5	14
			5	P	
	636.55	-20			

Description	Elev.	DEPTH (ft)	BLOWS (/6")	UCS Qu (tsf)	MOIST (%)
Stiff to Very Stiff Gray Silty Loam Till with Sand Layers and Silt Pockets			4		
			3	2.0	18
			5	P	
	634.55				
Very Stiff Gray Silt					
			7		
			13	3.0	18
			20	P	
		-25			
			9		
			11	2.5	22
			13	P	
	629.05				
Hard Olive Gray Silty Loam Till			7		
			11	4.2	14
			13	S	
		-30			
			8		
			14	4.4	14
			19	S	
		-35			
			9		
			13	4.2	14
	620.05		18	S	
End of Boring					
		-40			

The Unconfined Compressive Strength (UCS) Failure Mode is indicated by (B-Bulge, S-Shear, P-Penetrometer)
The SPT (N value) is the sum of the last two blow values in each sampling zone (AASHTO T206)

BBS, form 137 (Rev. 8-99)

Illinois Department of Transportation
Division of Highways
Illinois Department of Transportation

SOIL BORING LOG

Page 1 of 1

Date 7/19/22

ROUTE FAP 673 (IL 116) DESCRIPTION IL 116 over Scattering Point Creek, 0.5 mi W of N 600 E Rd LOGGED BY Larry Myers

SECTION (112BR)ES LOCATION SE 1/4, SEC. 24, TWP. 28, RNG. 3E, 3rd PM, Latitude 40.87173, Longitude -88.8242

COUNTY Livingston DRILLING METHOD Hollow Stem Auger HAMMER TYPE CME Automatic

STRUCT. NO. 053-0062 (Exist.)
Station 569+68

BORING NO. 2 (NE Quad)
Station 570+32
Offset 17.0 ft Lt.
Ground Surface Elev. 656.57 ft

Surface Water Elev. ft
Stream Bed Elev. ft

Groundwater Elev.:
First Encounter 644.1 ft ▼
Upon Completion 644.1 ft ▽
After Hrs. ft

Description	Elev.	DEPTH (ft)	BLOWS (/6")	UCS Qu (tsf)	MOIST (%)
Augered Shoulder Stone, Black Silty Clay Loam Fill					
	654.07				
Stiff Black Silty Clay Loam Fill			2		
			2	1.5	30
			2	P	
		-5			
			2		
			2	1.8	28
			3	P	
	649.57				
Stiff Gray and Brown Silty Clay Loess			2		
			2	1.5	24
WH = Weight of Hammer			2	P	
		-10			
			WH		
			3	1.5	28
			2	P	
	645.07				
Stiff Brown Silty Clay Loam					
▽▼			1		
	643.07		1	1.0	21
Very Stiff Gray Silty Clay Loam Till with Sandy Silt Layers			4	P	
		-15			
			4		
			8	3.7	19
			10	B	
			1		
			4	2.2	21
			5	B	
		-20			

Description	Elev.	DEPTH (ft)	BLOWS (/6")	UCS Qu (tsf)	MOIST (%)
Very Stiff Gray Silty Clay Loam Till with Sandy Silt Layers (continued)			4		
			5	2.6	14
			6	B	
	634.57				
Very Stiff Gray Silt with some Fine Sand Layers					
			10		
			13	2.5	21
			18	P	
		-25			
			6		
			8	2.0	16
			10	P	
	629.07				
Hard Olive Gray Silty Loam Till			3		
			8	4.2	14
			12	S	
		-30			
			8		
			12	4.6	13
			14	S	
		-35			
			9		
			12	4.4	16
	620.07		19	S	
End of Boring					
		-40			

The Unconfined Compressive Strength (UCS) Failure Mode is indicated by (B-Bulge, S-Shear, P-Penetrometer)
The SPT (N value) is the sum of the last two blow values in each sampling zone (AASHTO T206)

BBS, form 137 (Rev. 8-99)

SOIL BORING 053-0062.GPJ IL_DOT.GDT 3/11/24

SOIL BORING 053-0062.GPJ IL_DOT.GDT 3/11/24

MODEL: 0530194-66L79-026
FILE NAME: pw://ildot-pw.bentley.com:PWIDOT/Documents/IDOT O ces/Bureau of Bridges and Structures/OBM Projects/0530194/CADData/Bridge/0530194-66L79-Design.dgn

10/7/2024 10:52:57 AM

DESIGNED -	RYAN P. NEGANGARD	EXAMINED	ENGINEER OF BRIDGE DESIGN
CHECKED -	TIFFANY L. ADAMS		
DRAWN -	DENNIS A. POP	PASSED	ENGINEER OF BRIDGES AND STRUCTURES
CHECKED -	R.P.N. / T.L.A.		

DATE - 10/4/2024
REVISED -
REVISED -

STATE OF ILLINOIS
DEPARTMENT OF TRANSPORTATION

SOIL BORING LOGS
STRUCTURE NO. 053-0194

SHEET 26 OF 29 SHEETS

F.A.P. RTE.	SECTION	COUNTY	TOTAL SHEETS	SHEET NO.
673	(112BR)ES	LIVINGSTON	65	48
		CONTRACT NO. 66L79		
		ILLINOIS	FED. AID PROJECT	

Illinois Department of Transportation
Division of Highways
IDOT

SOIL BORING LOG

Date 5/28/65

ROUTE SBI 16 DESCRIPTION SBI 116 over Scattering Point Creek LOGGED BY C. I. Bassing

SECTION 112 BR LOCATION NE 1/4, SEC. 25, TWP. 28, RNG. 3E, 3rd PM,

COUNTY Livingston DRILLING METHOD HAMMER TYPE

STRUCT. NO. 053-0062
Station 569+68

BORING NO. 1
Station 569+57.5
Offset 25.5 ft Rt.
Ground Surface Elev. 650.90 ft

Surface Water Elev. 646.59 ft
Stream Bed Elev. ft

Groundwater Elev.:
First Encounter ft
Upon Completion 636.2 ft ▽
After Hrs. 616.9 ft ▼

Description	DEPTH (ft)	BLOWS (/6")	UCS Qu (tsf)	MOIST (%)
Stiff Brownish Black SILTY CLAY				
		8	1.0 E	31
647.40				
Very Stiff to Hard Yellowish Brown & Gray CLAY (Till)				
	-5	7	2.7 B	22
		22	6.4 B	16
642.40				
Medium Gray Uniform Fine SAND				
	-10	12		
638.90				
Very Stiff Gray CLAY & CLAY LOAM (Till)				
		10	3.5 B	14
▽	-15	13	3.5 B	15
		22	3.7 S	18
632.40				
Hard Brownish Gray & Gray SILTY CLAY (Till)				
	-20		5.0	13
Hard Brownish Gray & Gray SILTY CLAY (Till) (continued)				
		15	B	
		21	5.7 S	14
	-25	31	7.2 S	14
		33	5.7 S	19
622.40				
Very Stiff Brownish Gray SILTY LOAM				
	-30	39	2.2 S	18
		40	2.0 S	18
617.40				
Loose Gray Uniform fine SAND ▼				
	-35	6		
614.90				
Very Dense Brown to Gray Angular Coarse SAND				
		190		
612.40				
Hard Olive Brown & Gray CLAY & CLAY LOAM (Till)				
	-40		7.4	12

The Unconfined Compressive Strength (UCS) Failure Mode is indicated by (B-Bulge, S-Shear, P-Penetrometer)
The SPT (N value) is the sum of the last two blow values in each sampling zone (AASHTO T206)

BBS, form 137 (Rev. 8-99)

Illinois Department of Transportation
Division of Highways
IDOT

SOIL BORING LOG

Date 5/28/65

ROUTE SBI 16 DESCRIPTION SBI 116 over Scattering Point Creek LOGGED BY C. I. Bassing

SECTION 112 BR LOCATION NE 1/4, SEC. 25, TWP. 28, RNG. 3E, 3rd PM,

COUNTY Livingston DRILLING METHOD HAMMER TYPE

STRUCT. NO. 053-0062
Station 569+68

BORING NO. 1
Station 569+57.5
Offset 25.5 ft Rt.
Ground Surface Elev. 650.90 ft

Surface Water Elev. 646.59 ft
Stream Bed Elev. ft

Groundwater Elev.:
First Encounter ft
Upon Completion 636.2 ft ▽
After Hrs. 616.9 ft ▼

Description	DEPTH (ft)	BLOWS (/6")	UCS Qu (tsf)	MOIST (%)
Hard Olive Brown & Gray CLAY & CLAY LOAM (Till) (continued)				
		53	S	
		51	6.4 B	12
	-45	42	4.6 B	13
		52	5.8 B	12
	-50	47	5.8 B	13
600.40				
End of Boring				
	-55			
	-60			

The Unconfined Compressive Strength (UCS) Failure Mode is indicated by (B-Bulge, S-Shear, P-Penetrometer)
The SPT (N value) is the sum of the last two blow values in each sampling zone (AASHTO T206)

BBS, form 137 (Rev. 8-99)

MODEL: 0530194-66L79-027
FILE NAME: pw://idot-pw.bentley.com:PWIDOT/Documents/IDOT O ces/Bureau of Bridges and Structures/OBM Projects/0530194/CADData/Bridge/0530194-66L79-Design.dgn

DESIGNED - RYAN P. NEGANGARD	EXAMINED	DATE - 10/4/2024	
CHECKED - TIFFANY L. ADAMS	ENGINEER OF BRIDGE DESIGN		
DRAWN - DENNIS A. POP	PASSED	REVISED -	
CHECKED - R.P.N. / T.L.A.	ENGINEER OF BRIDGES AND STRUCTURES	REVISED -	

10/7/2024 10:52:57 AM

STATE OF ILLINOIS
DEPARTMENT OF TRANSPORTATION

SOIL BORING LOGS
STRUCTURE NO. 053-0194

SHEET 27 OF 29 SHEETS

F.A.P. RTE.	SECTION	COUNTY	TOTAL SHEETS	SHEET NO.
673	(112BR)ES	LIVINGSTON	65	49
		CONTRACT NO. 66L79		
		ILLINOIS	FED. AID PROJECT	

Illinois Department of Transportation
Division of Highways
IDOT

SOIL BORING LOG

Date 6/3/65

ROUTE SBI 16 DESCRIPTION SBI 116 over Scattering Point Creek LOGGED BY C. I. Bassing

SECTION 112 BR LOCATION NE 1/4, SEC. 25, TWP. 28, RNG. 3E, 3rd PM,

COUNTY Livingston DRILLING METHOD HAMMER TYPE

STRUCT. NO. 053-0062
Station 569+68

BORING NO. 2
Station 569+20
Offset 27.0 ft Rt.
Ground Surface Elev. 651.14 ft

Surface Water Elev. 646.59 ft
Stream Bed Elev. ft

Groundwater Elev.:
First Encounter ft
Upon Completion Wash bored ft
After Hrs. ft

Description	Elev.	DEPTH (ft)	BLOWS (/6")	UCS Qu (tsf)	MOIST (%)
Stiff to Medium Brownish Black & Gray SILTY CLAY					
			6	1.0 E	28
		-5	2	0.8 B	24
Very Stiff Gray SILTY CLAY	645.14				
			15	2.9 S	17
Hard Gray CLAY & CLAY Loam (Till)	642.64				
		-10	22	4.6 B	15
			19	3.9 B	16
Stiff Gray CLAY LOAM (Till)	637.64				
		-15	9	1.4 B	16
Medium Gray Angular Coarse SAND	635.14				
Hard Gray CLAY LOAM (Till)	634.14				
			25	7.2 S	13
Very Stiff Gray CLAY LOAM (Till)	632.64				
		-20		2.9	12
Very Stiff Gray CLAY LOAM (Till) (continued)	630.14		17	B	
Hard Brownish Gray SILTY CLAY (Till)					
			25	6.4 S	13
		-25	31	4.8 S	15
.Very Stiff Brownish Gray SILTY LOAM	625.14				
			74	2.1 S	15
		-30	38	2.6 S	22
			54	4.1 S	15
Very Dense Brownish Gray & Gray Angular to Sub Angular Fine to COARSE SAND	617.64				
		-35	128		
Hard Olive Brown & Gray CLAY & CLAY LOAM (Till)	612.64				
		-40		5.8	12

The Unconfined Compressive Strength (UCS) Failure Mode is indicated by (B-Bulge, S-Shear, P-Penetrometer)
The SPT (N value) is the sum of the last two blow values in each sampling zone (AASHTO T206)

BBS, form 137 (Rev. 8-99)

Illinois Department of Transportation
Division of Highways
IDOT

SOIL BORING LOG

Date 6/3/65

ROUTE SBI 16 DESCRIPTION SBI 116 over Scattering Point Creek LOGGED BY C. I. Bassing

SECTION 112 BR LOCATION NE 1/4, SEC. 25, TWP. 28, RNG. 3E, 3rd PM,

COUNTY Livingston DRILLING METHOD HAMMER TYPE

STRUCT. NO. 053-0062
Station 569+68

BORING NO. 2
Station 569+20
Offset 27.0 ft Rt.
Ground Surface Elev. 651.14 ft

Surface Water Elev. 646.59 ft
Stream Bed Elev. ft

Groundwater Elev.:
First Encounter ft
Upon Completion Wash bored ft
After Hrs. ft

Description	Elev.	DEPTH (ft)	BLOWS (/6")	UCS Qu (tsf)	MOIST (%)
Hard Olive Brown & Gray CLAY & CLAY LOAM (Till) (continued)			51	B	
			44	5.4 B	13
		-45	44	6.6 B	13
End of Boring	605.64				
		-50			
		-55			
		-60			

The Unconfined Compressive Strength (UCS) Failure Mode is indicated by (B-Bulge, S-Shear, P-Penetrometer)
The SPT (N value) is the sum of the last two blow values in each sampling zone (AASHTO T206)

BBS, form 137 (Rev. 8-99)

MODEL: 0530194-66L79-028
FILE NAME: pw://ildot-pw.bentley.com:PWIDOT/Documents/IDOT O ces/Bureau of Bridges and Structures/OBM Projects/0530194/CADData/Bridge/0530194-66L79-Design.dgn

DESIGNED - RYAN P. NEGANGARD	EXAMINED	DATE - 10/4/2024	
CHECKED - TIFFANY L. ADAMS	ENGINEER OF BRIDGE DESIGN		
DRAWN - DENNIS A. POP	PASSED	REVISED -	
CHECKED - R.P.N. / T.L.A.	ENGINEER OF BRIDGES AND STRUCTURES	REVISED -	

STATE OF ILLINOIS
DEPARTMENT OF TRANSPORTATION

SOIL BORING LOGS
STRUCTURE NO. 053-0194

SHEET 28 OF 29 SHEETS

F.A.P. RTE.	SECTION	COUNTY	TOTAL SHEETS	SHEET NO.
673	(112BR)ES	LIVINGSTON	65	50
		CONTRACT NO. 66L79		
		ILLINOIS	FED. AID PROJECT	

10/7/2024 10:52:58 AM

Illinois Department of Transportation
Division of Highways
IDOT

SOIL BORING LOG

Date 6/7/65

ROUTE SBI 16 DESCRIPTION SBI 116 over Scattering Point Creek LOGGED BY C. I. Bassing

SECTION 112 BR LOCATION NE 1/4, SEC. 25, TWP. 28, RNG. 3E, 3rd PM,

COUNTY Livingston DRILLING METHOD HAMMER TYPE

STRUCT. NO. 053-0062
Station 569+68

BORING NO. 3
Station 570+07.5
Offset 25.0 ft Lt.
Ground Surface Elev. 654.49 ft

Surface Water Elev. 646.59 ft
Stream Bed Elev. ft

Groundwater Elev.:
First Encounter ft
Upon Completion Wash bored ft
After Hrs. ft

Description	Elev.	DEPTH (ft)	BLOWS (/6")	UCS Qu (tsf)	MOIST (%)
Very Stiff Brownish Black & Gray CLAY & SILTY CLAY			6	2.0 E	19
		-5	11	2.5 S	24
Soft Yellowish Brown SILTY CLAY	648.49			0.3 B	23
Very Stiff Yellowish Brown & Gray CLAY & SILTY CLAY (Till)	647.49		7	2.3 B	22
		-10	12	2.5 S	18
Hard Gray CLAY (Till)	643.49			5.0 B	20
Very Stiff Gray CLAY & CLAY LOAM (Till)	641.99		21	2.5 S	20
		-15	12	2.1 B	12
Medium Gray CLAY & CLAY LOAM (Till)	638.49		10	0.8 B	16
Stiff Gray CLAY LOAM (Till)	635.99	-20		1.9	20
Stiff Gray CLAY LOAM (Till) (continued)			17	S	
			10	1.5 B	12
Hard Brownish GRAY SILTY CLAY (Till)	630.99	-25	34	6.1 S	12
Medium Brownish Gray SILTY LOAM	628.49		45	0.8 S	20
Very Stiff Brownish Gray SILTY LOAM	625.99	-30	25	3.7 S	21
Hard to Very Stiff Brownish Gray SILTY CLAY	623.49	-35	25	3.7 S	20
			30	5.6 S	18
Very Stiff Brownish Gray SILTY LOAM	618.49		34	2.1 S	23
Medium Gray Angular Fine to COARSE SAND	615.99	-40			

The Unconfined Compressive Strength (UCS) Failure Mode is indicated by (B-Bulge, S-Shear, P-Penetrometer)
The SPT (N value) is the sum of the last two blow values in each sampling zone (AASHTO T206)

BBS, form 137 (Rev. 8-99)

Illinois Department of Transportation
Division of Highways
IDOT

SOIL BORING LOG

Date 6/7/65

ROUTE SBI 16 DESCRIPTION SBI 116 over Scattering Point Creek LOGGED BY C. I. Bassing

SECTION 112 BR LOCATION NE 1/4, SEC. 25, TWP. 28, RNG. 3E, 3rd PM,

COUNTY Livingston DRILLING METHOD HAMMER TYPE

STRUCT. NO. 053-0062
Station 569+68

BORING NO. 3
Station 570+07.5
Offset 25.0 ft Lt.
Ground Surface Elev. 654.49 ft

Surface Water Elev. 646.59 ft
Stream Bed Elev. ft

Groundwater Elev.:
First Encounter ft
Upon Completion Wash bored ft
After Hrs. ft

Description	Elev.	DEPTH (ft)	BLOWS (/6")	UCS Qu (tsf)	MOIST (%)
Medium Gray Angular Fine to COARSE SAND (continued)			14		
Very Dense Angular to Sub Angular Fine to Coarse SAND	613.49		195		
		-45	88		
Hard Yellowish Brown & Gray CLAY LOAM (Till)	608.49		85	4.1 S	13
		-50	46	5.8 B	12
End of Boring	603.99	-55			
		-60			

The Unconfined Compressive Strength (UCS) Failure Mode is indicated by (B-Bulge, S-Shear, P-Penetrometer)
The SPT (N value) is the sum of the last two blow values in each sampling zone (AASHTO T206)

BBS, form 137 (Rev. 8-99)

MODEL: 0530194-66L79-029
FILE NAME: pw://idot-pw.bentley.com:PWIDOT/Documents/IDOT O ces/Bureau of Bridges and Structures/OBM Projects/0530194/CADData/Bridge/0530194-66L79-Design.dgn
10/7/2024 10:52:59 AM

DESIGNED - RYAN P. NEGANGARD	EXAMINED	DATE - 10/4/2024	
CHECKED - TIFFANY L. ADAMS	ENGINEER OF BRIDGE DESIGN		
DRAWN - DENNIS A. POP	PASSED	REVISED -	
CHECKED - R.P.N. / T.L.A.	ENGINEER OF BRIDGES AND STRUCTURES	REVISED -	

STATE OF ILLINOIS
DEPARTMENT OF TRANSPORTATION

SOIL BORING LOGS
STRUCTURE NO. 053-0194

SHEET 29 OF 29 SHEETS

F.A.P. RTE.	SECTION	COUNTY	TOTAL SHEETS	SHEET NO.
673	(112BR)ES	LIVINGSTON	65	51
		CONTRACT NO. 66L79		
		ILLINOIS	FED. AID PROJECT	

B.M. #71 □ on top S.W. wingwall of Bridge
17' Rt. Sta. 569 + 17 El. 656.19.
Existing Structure: ±50' R.C.D. Girder on RC Abuts. 20.3' Rdwy.
Contractor shall remove portions that interfere with new construction, except W. Abut. shall remain in place, as specified, to support approach pavement.

STATE OF ILLINOIS
DEPARTMENT OF PUBLIC WORKS & BUILDINGS
DIVISION OF HIGHWAYS

ROUTE NO.	SECTION	COUNTY	TOTAL SHEETS	SHEET NO.
S.B.I. F.A. 147	112 BR	LIVINGSTON	139	42
FED. ROAD DIST. NO. 7	ILLINOIS	FED. AID PROJECT-		

SHEET NO. 1
G SHEETS

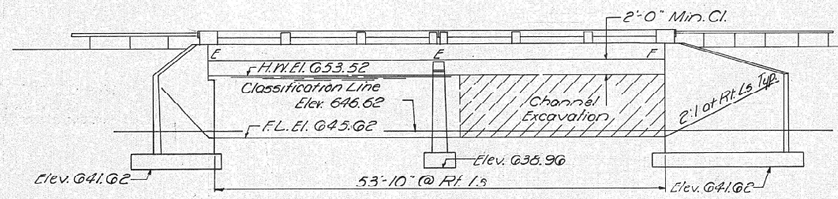

ELEVATION

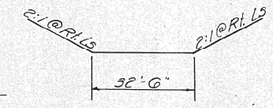

PROPOSED TYPICAL X-SEC. OF CHANNEL RELOCATION

STATION 569 + 68
BUILT 196 BY
STATE OF ILLINOIS
S.B.I. RT. 116 ~ SEC. 112-BR
F.A. PROJ. F-395 (14)
LOADING H520

NAME PLATE
(See Std. 2113-1)

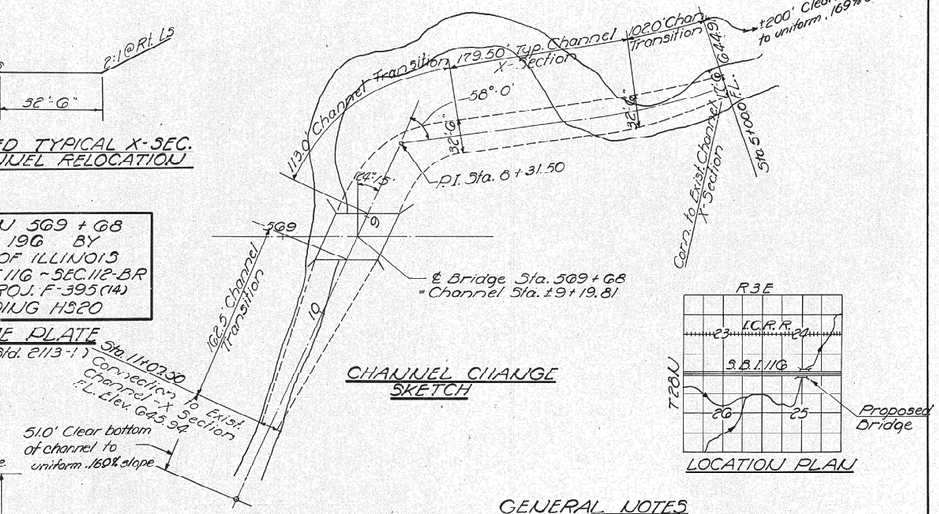

CHANNEL CHANGE SKETCH

LOCATION PLAN

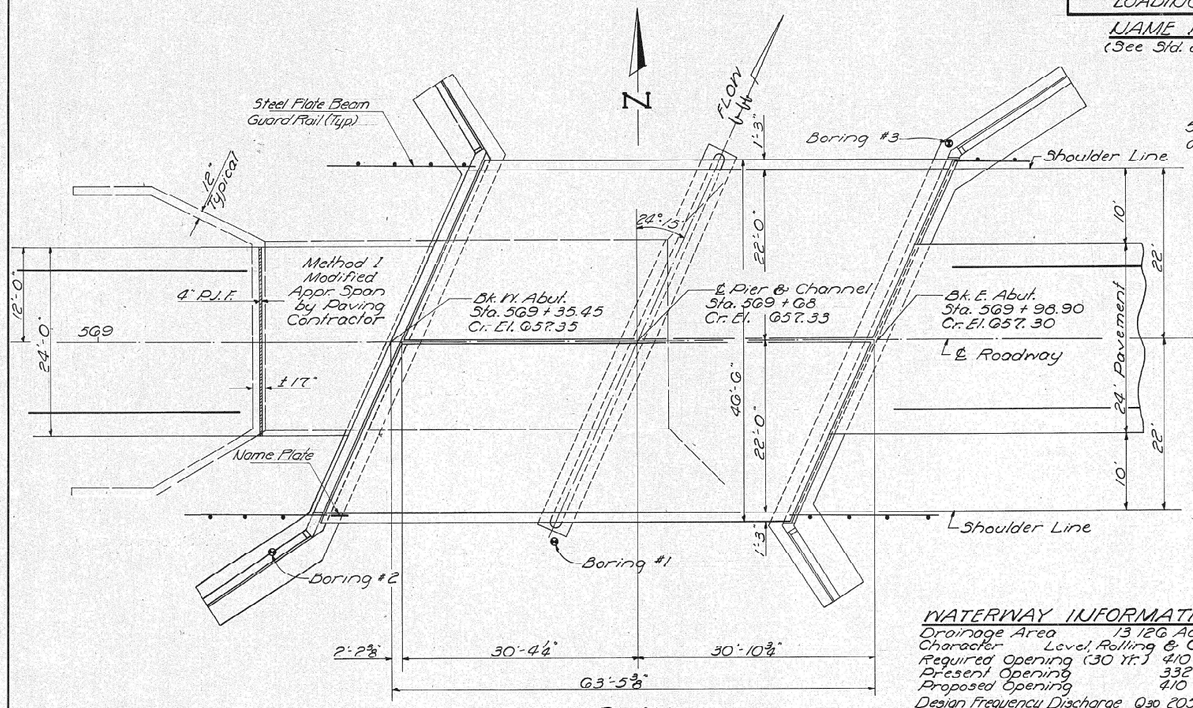

PLAN

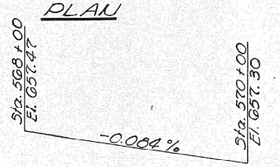

PROFILE S.B.I. 116 (F.A. 147)

WATERWAY INFORMATION
Drainage Area 13.126 Acres
Character Level, Rolling & Cultivated
Required Opening (30 Yr.) 410 Sq. Ft.
Present Opening 332 Sq. Ft.
Proposed Opening 410 Sq. Ft.
Design Frequency Discharge Q50 2050 c.f.s.

GENERAL NOTES

Calculated Weight of Structural Steel = 7340 Lbs
All reinforcement bars shall be lapped 34 diameters unless otherwise shown.
The cost of pavement removal shall be incidental to Class A Excavation for Structures.
Handrail concrete shall be used in the rail and rail posts. Rail shall be poured in separate operation from interior rail posts.
The Contractor shall make allowance for the deflection of forms, shrinkage and settlement of falsework, in addition to allowance for dead load deflection.
Except as otherwise provided, all Structural Steel shall receive one shop coat of red lead paint and two field coats of aluminum paint.
The following surfaces of the bridge shall be waterproofed: the backs of the abuts. above the lower construction joint and the backs of the wings above the top of the footings.

TOTAL BILL OF MATERIAL

Item	Unit	Super.	Sub.	Total
Channel Excavation	Cu. Yds.			5924
Removal of Existing Structures	Each			1
Class A Excavation for Structures	Cu. Yds.			425
Class B Excavation for Structures	Cu. Yds.			380
Structural Steel	Lump Sum	Lump Sum		Lump Sum
Handrail Concrete	Cu. Yds.	3.7		3.7
Class A Concrete	Cu. Yds.		87.4	87.4
Class X Concrete	Cu. Yds.	155.0	192.1	347.1
Reinforcement Bars	Lbs.	41,080	21 730	62810
Name Plates	Each	1		1
Protective Coat	Sq. Yds.		350	350
Preformed Joint Sealer	Lin. Ft.	52		

DESIGN STRESSES
f_c = 1,400 p.s.i. (Super.)
f_s = 20,000 p.s.i. (Reinf. & Strucl.)
v_c = 75 p.s.i. (Ftgs.)
f_c = 1,000 p.s.i. (Sub.) n=10
LOADING H520-44

PROJ. F-395 (14)
GENERAL PLAN & ELEVATION
S.B.I. RT. 116 (F.A. 147)
OVER SCATTERING PT. CREEK
SEC. 112-BR
LIVINGSTON COUNTY
STA. 569 + 68

DESIGNED	Harish Varmani
CHECKED	
DRAWN	H.V. jacobs
CHECKED	

EXAMINED May 6 1966 — STRUCTURAL AND TRAFFIC STRUCTURES
PASSED — ENGINEER OF DESIGN
APPROVED — BUREAU OF HIGHWAY BUILDING

Rev. 7/15/69 S.Y.K. Rev. 1/8/70 Rao. G.K.

FOR INFORMATION ONLY

MODEL: Default
FILE NAME: c:\pw_work\pwidot\zagarjk\d1008619\66L79-EXISTING_STRUCTURE_PLANS.dgn

USER NAME = Joseph.Zagar	DESIGNED -	REVISED -
	DRAWN -	REVISED -
	CHECKED -	REVISED -
PLOT DATE = 8/8/2024	DATE -	REVISED -

STATE OF ILLINOIS
DEPARTMENT OF TRANSPORTATION

EXISTING STRUCTURE PLANS

SCALE: SHEET OF SHEETS STA. TO STA.

F.A.P RTE.	SECTION	COUNTY	TOTAL SHEETS	SHEET NO.
673	(112BR)BR	LIVINGSTON	65	52
		CONTRACT NO. 66L79		
		ILLINOIS	FED. AID PROJECT	

WMYR NO.	SECTION	COUNTY	TOTAL SHEETS	SHEET NO.
S.B.I. R.R. 147	112BR	LIVINGSTON	139	43
FED. ROAD DIST. NO. 7	ILLINOIS	FED. AID PROJECT-		

SHEET NO. 2 OF 6 SHEETS

STATE OF ILLINOIS
DEPARTMENT OF PUBLIC WORKS & BUILDINGS
DIVISION OF HIGHWAYS

Note: Order b_1 & b_2 bars full length, cut to fit skew and use remainder of bars in opposite end. Bars indicated thus 20x3-#5 etc. indicates 20 lines of bars with 3 lengths per line. Min. bar lap = 24 dia.

Note: For Handrail Details see Standard 2070 R.C.

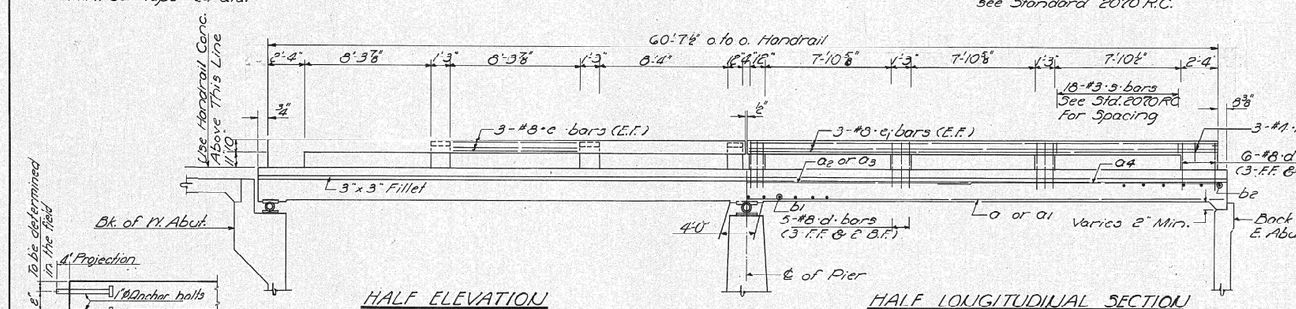

HALF ELEVATION

HALF LONGITUDINAL SECTION

ELEVATION OF END POST

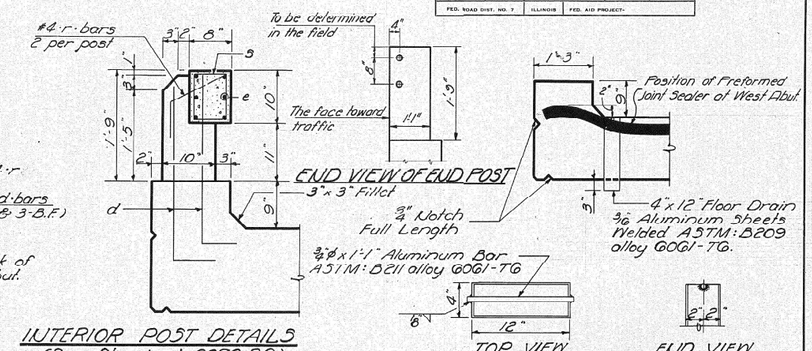

INTERIOR POST DETAILS (See Standard 2070 RC)

END VIEW OF END POST

TOP VIEW FLOOR DRAIN DETAILS

END VIEW

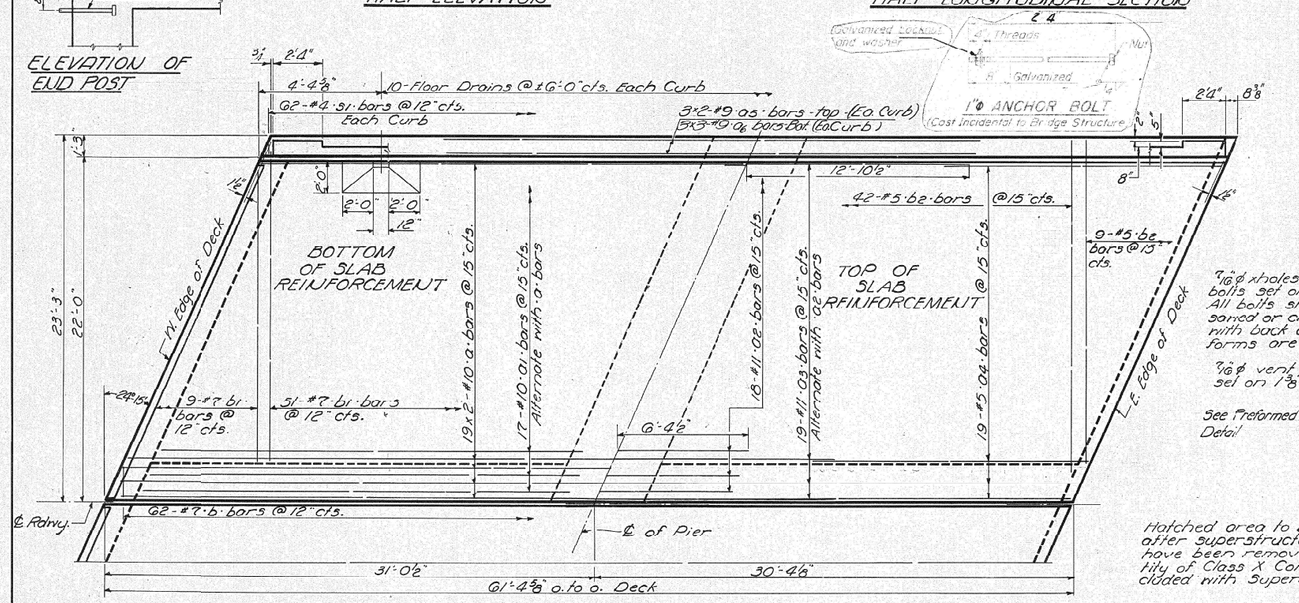

HALF PLAN

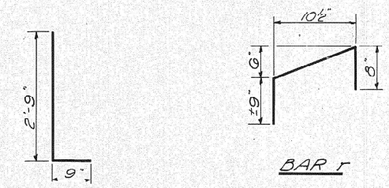

BAR d

BAR r

STRESS TABLE

Load	Location	Moments K-ft/ft width 4-SPI	Moments K-ft/ft width Pier	Reactions Kips/width Abut	Reactions Kips/width Pier
DL		14.0	25.1	2.6	8.8
LL		20.1	16.7	4.0	5.3
Imp		6.0	5.0	—	—
Total		40.1	46.8	6.6	14.1

BILL OF MATERIAL

Bar	No.	Size	Length	Shape
a	76	#10	31'-9"	
a1	68	#10	25'-0"	
a2	36	#11	12'-9"	
a3	38	#11	25'-9"	
a4	76	#5	20'-6"	
a5	12	#9	31'-6"	
a6	18	#9	23'-2"	
b	124	#7	2'-3	
b1	120	#7	21'-9"	
b2	102	#5	22'-6"	
d	84	#8	3'-6"	
e	12	#8	30'-8"	
e1	12	#8	29'-4"	
r	36	#4	2'-6"	
s	216	#3	2'-11"	
s1	124	#4	6'-4"	
Handrail Conc.			Cu.Yds.	3.7
Class X Conc.			Cu.Yds.	155.0
Reinforcement Bars			Lbs.	41080
Name Plates			Ea.	1
Structural Steel			Lbs	7340

7/16"ø x holes at 12" cts. for ⅞" bolts set on 2½" gage line. All bolts shall be burned, sawed or clipped off flush with back of angles after forms are removed.

7/16"ø vent holes of 12" cts. set on 1⅜" gage line.

¾"ø x 8" CR 1020 STL granular or solid flux filled headed studs, automatically end welded. (Alternate at 1'-0" cts.) 24-Req'd. (Ea. Angle)

L-4"x4"x½"x 23'-11" Long (Fabricate to fit Cronin 4-Req'd.)

See Preformed Jt. Sealer Detail

Hatched area to be poured after superstructure forms have been removed. Quantity of Class X Concrete included with Superstructure.

¼"ø holes for 1"ø x 12 Anchor Bolts

EXPANSION BEARING AT WEST ABUTMENT (PIER BRG. SIMILAR)

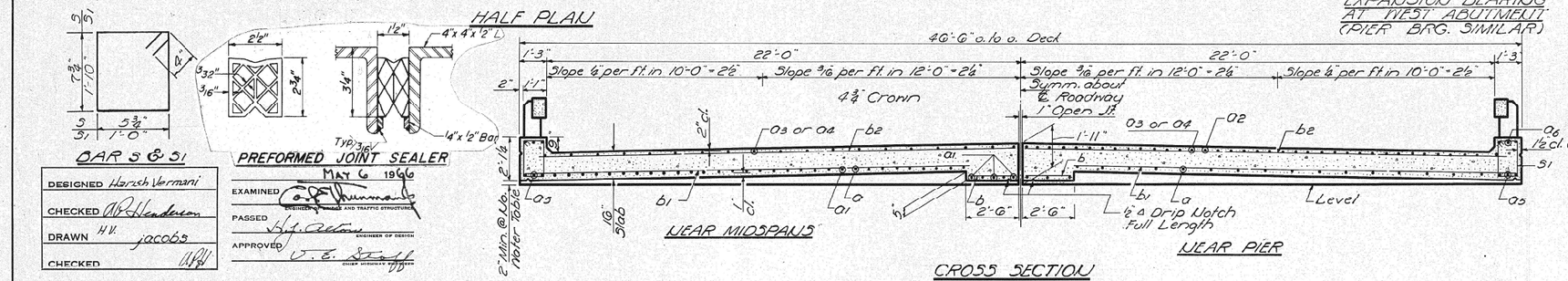

NEAR MIDSPANS

NEAR PIER

CROSS SECTION

DEAD LOAD DEFLECTION DIAGRAM

DESIGNED	Harish Vermani
CHECKED	A.R. Henderson
DRAWN	H.V. jacobs
CHECKED	

MAY 6 1966
EXAMINED — ENGINEER OF BRIDGES AND TRAFFIC STRUCTURES
PASSED — ENGINEER OF DESIGN
APPROVED — CHIEF HIGHWAY ENGINEER

SUPERSTRUCTURE
S.B.I. RT. 116 (F.A. 147) - SEC. 112-BR
LIVINGSTON COUNTY
STA. 569+68

FOR INFORMATION ONLY

MODEL: Default
FILE NAME: c:\pw_work\pwidot\zagarjk\d1008618\66L79-EXISTING_STRUCTURE_PLANS.dgn

USER NAME = Joseph.Zagar	DESIGNED -	REVISED -	STATE OF ILLINOIS DEPARTMENT OF TRANSPORTATION
	DRAWN -	REVISED -	
	CHECKED -	REVISED -	
PLOT DATE = 8/8/2024	DATE -	REVISED -	

EXISTING STRUCTURE PLANS

SCALE: | SHEET OF SHEETS | STA. | TO STA.

F.A.P RTE.	SECTION	COUNTY	TOTAL SHEETS	SHEET NO.
673	(112BR)BR	LIVINGSTON	65	53
		CONTRACT NO. 66L79		
		ILLINOIS	FED. AID PROJECT	

STATE OF ILLINOIS
DEPARTMENT OF PUBLIC WORKS & BUILDINGS
DIVISION OF HIGHWAYS

ROUTE NO.	SECTION	COUNTY	TOTAL SHEETS	SHEET NO.
S.B.I. F.A. 147	112BR	LIVINGSTON	139	44
FED. ROAD DIST. NO. 7	ILLINOIS	FED. AID PROJECT-		

SHEET NO. 3 OF 6 SHEETS

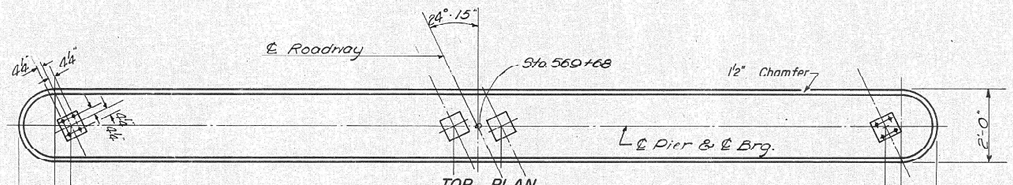

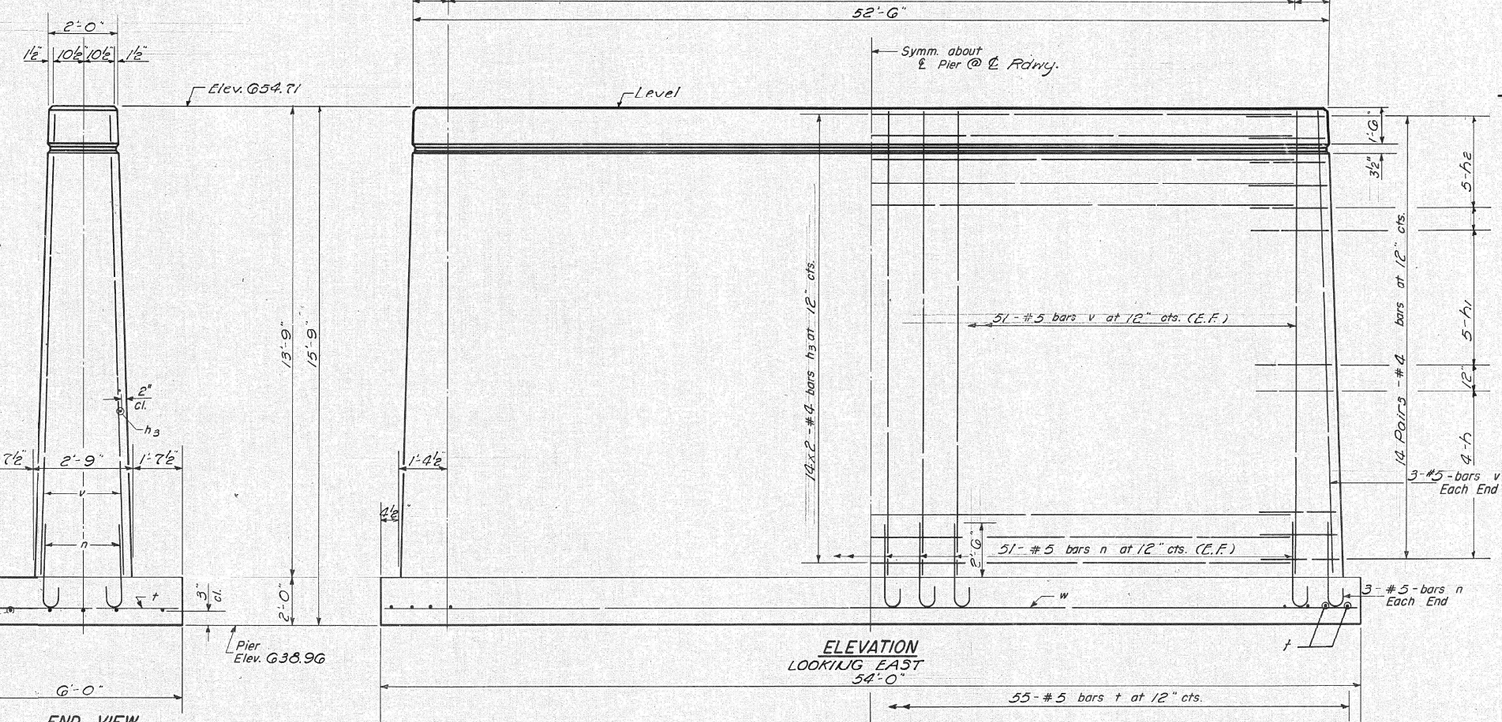

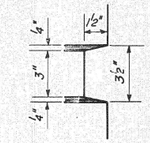

NOTCH DETAIL

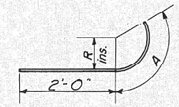

Bar	R	A
h	1'-2"	2'-9"
h1	1'-0"	2'-3"
h2	0'-10"	2'-0"

DETAIL OF BARS
h thru h2

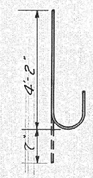

BAR n

BILL OF MATERIAL

Bar	No.	Size	Length	Shape
h	16	#4	4'-9"	
h1	20	#4	4'-3"	
h2	20	#4	4'-0"	
h3	56	#4	25'-9"	
n	108	#5	4'-9"	
t	55	#5	5'-9"	
v	108	#5	13'-6"	
w	10	#5	27'-6"	
Class A Concrete			Cu. Yds.	87.1
Reinforcement Bars			Lbs.	3800

Max. Footing Pressure = 1.6 tons/square foot.

DESIGNED	Harishander	
CHECKED	R.R. Henderson Jacobs	
DRAWN	W. A. Sausaman	
CHECKED		

EXAMINED — MAY 6 1966 — ENGINEER OF BRIDGE AND TRAFFIC STRUCTURES
PASSED — ENGINEER OF DESIGN
APPROVED — STATE HIGHWAY ENGINEER

P-1 Re-drawn 7-21-59 Rev. 11-25-59

PIER
S.B.I. RT. 116 (F.A. 147) - SEC. 112-BR
LIVINGSTON COUNTY
STA. 569+68

FOR INFORMATION ONLY

MODEL: Default
FILE NAME: c:\pw_work\pwidot\zagarjk\d1008618\66L79-EXISTING_STRUCTURE_PLANS.dgn

USER NAME = Joseph.Zagar	DESIGNED -	REVISED -	
	DRAWN -	REVISED -	
	CHECKED -	REVISED -	
PLOT DATE = 8/8/2024	DATE -	REVISED -	

STATE OF ILLINOIS
DEPARTMENT OF TRANSPORTATION

EXISTING STRUCTURE PLANS

SCALE: SHEET OF SHEETS STA. TO STA.

F.A.P RTE.	SECTION	COUNTY	TOTAL SHEETS	SHEET NO.
673	(112BR)BR	LIVINGSTON	65	54
		CONTRACT NO. 66L79		
		ILLINOIS	FED. AID PROJECT	

STATE OF ILLINOIS
DEPARTMENT OF PUBLIC WORKS & BUILDINGS
DIVISION OF HIGHWAYS

ROUTE NO.	SECTION	COUNTY	TOTAL SHEETS	SHEET NO.
S. B. I. F. A. 147	112 BR	LIVINGSTON	139	45
FED. ROAD DIST. NO. 7	ILLINOIS	FED. AID PROJECT-		

SHEET NO. 4 OF 6 SHEETS

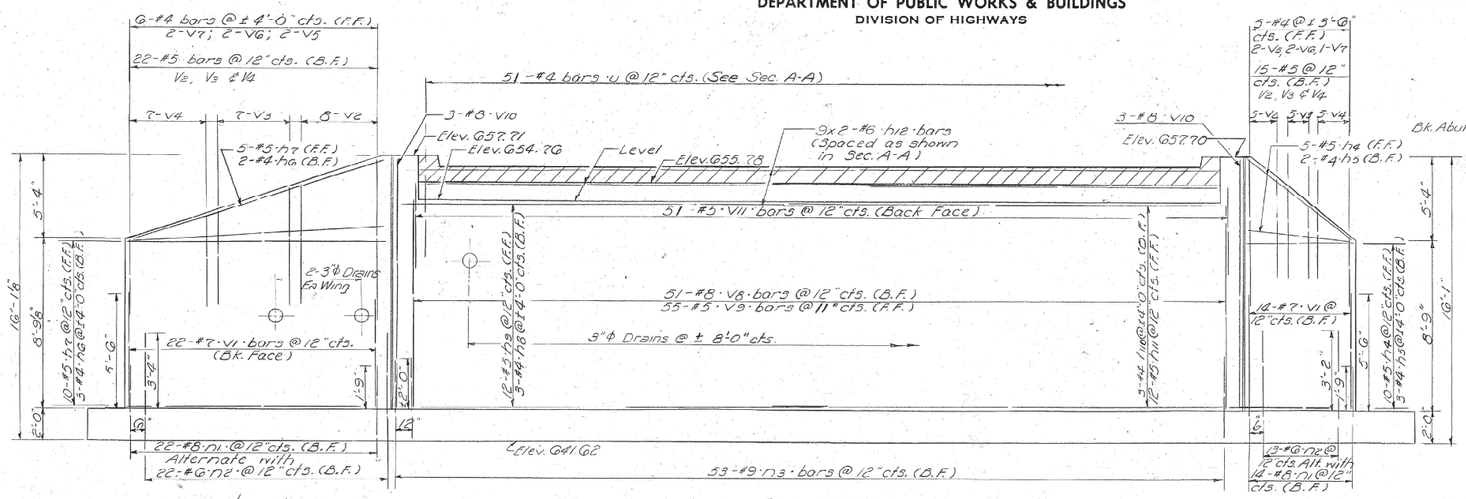

ELEVATION

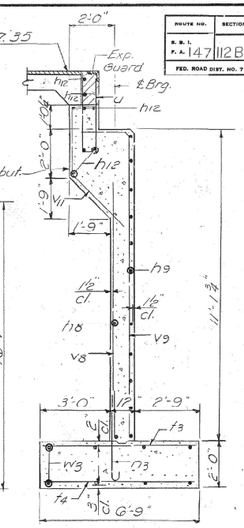

SECTION A-A

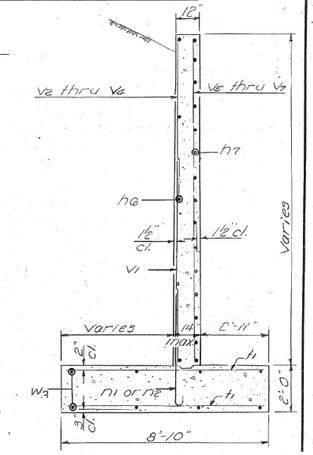

SECTION B-B

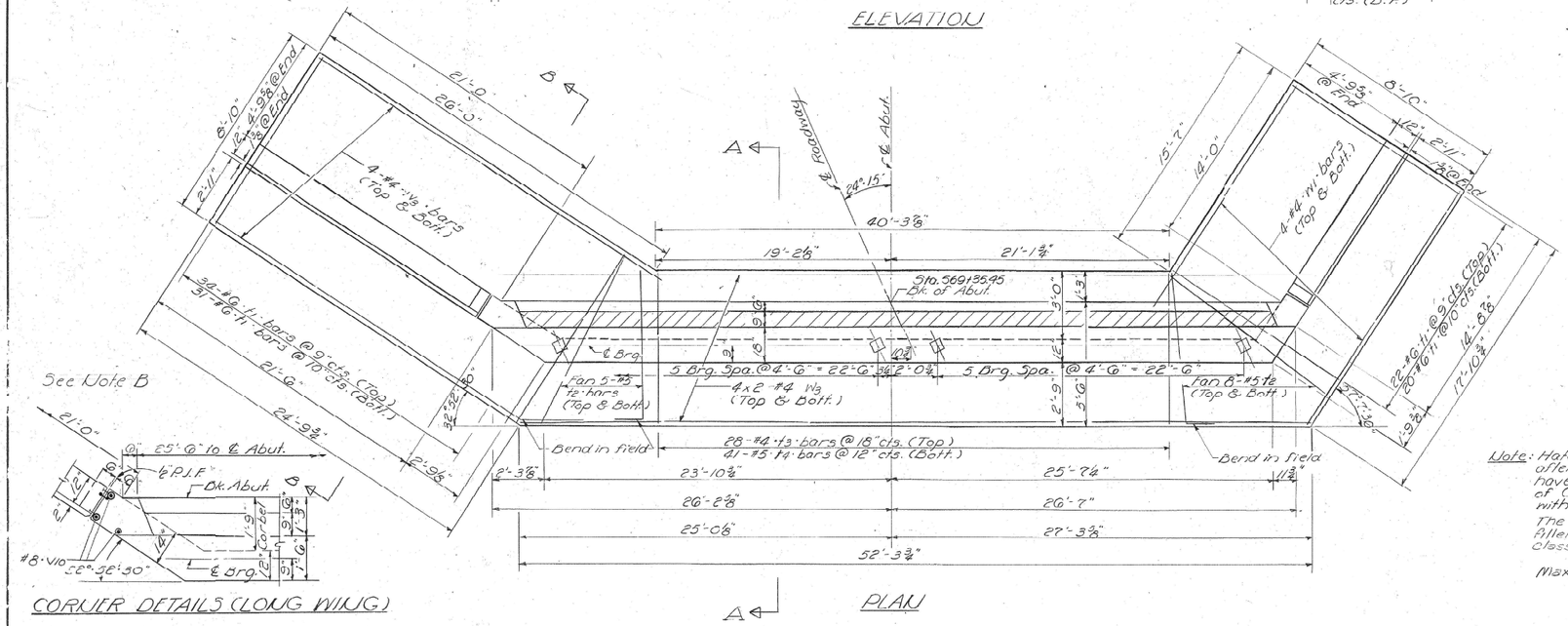

PLAN

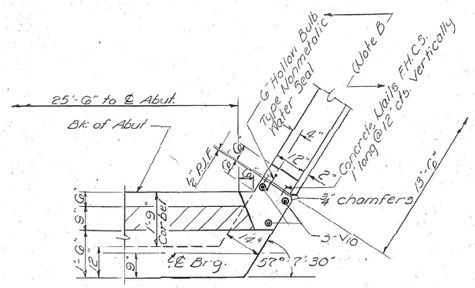

CORNER DETAILS (SHORT WING)

CORNER DETAILS (LONG WING)

Note: Hatched Area to be poured after Superstructure forms have been removed. Quantity of Class X Concrete included with Superstructure.

The cost of all premolded joint filler shall be incidental to Class "X" Concrete.

Max. Footing Pressure – 1.65 Tsf.

DESIGNED	David Snyder
CHECKED	A. P. Henderson
DRAWN	David Snyder / Jacobs
CHECKED	A. P. Henderson

EXAMINED — Mar 6 1966 — ENGINEER OF BRIDGE AND TRAFFIC STRUCTURES
PASSED — H. J. Peters — ENGINEER OF DESIGN
APPROVED — C. E. Smith — CHIEF HIGHWAY ENGINEER

Work this Sheet with Sheet 5

WEST ABUTMENT
S.B.I. RT. 116 (F.A. 147) SEC. 112-Br.
LIVINGSTON COUNTY
STA. 569 + 68

FOR INFORMATION ONLY

MODEL: Default
FILE NAME: c:\pw_work\pwidot\zagarjk\d1008618\66L79-EXISTING_STRUCTURE_PLANS.dgn

USER NAME = Joseph.Zagar	DESIGNED -	REVISED -	
	DRAWN -	REVISED -	
	CHECKED -	REVISED -	
PLOT DATE = 8/8/2024	DATE -	REVISED -	

STATE OF ILLINOIS
DEPARTMENT OF TRANSPORTATION

EXISTING STRUCTURE PLANS

SCALE: SHEET OF SHEETS STA. TO STA.

F.A.P RTE.	SECTION	COUNTY	TOTAL SHEETS	SHEET NO.
673	(112BR)BR	LIVINGSTON	65	55
		CONTRACT NO. 66L79		
		ILLINOIS	FED. AID PROJECT	

STATE OF ILLINOIS
DEPARTMENT OF PUBLIC WORKS & BUILDINGS
DIVISION OF HIGHWAYS

ROUTE NO.	SECTION	COUNTY	TOTAL SHEETS	SHEET NO.
S.B.I. R.A. 147	112BR	LIVINGSTON	139	46
FED. ROAD DIST. NO. 7	ILLINOIS	FED. AID PROJECT-		

SHEET NO. 5 OF 6 SHEETS

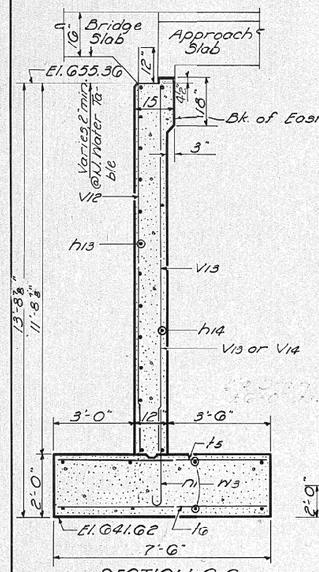

SECTION C-C

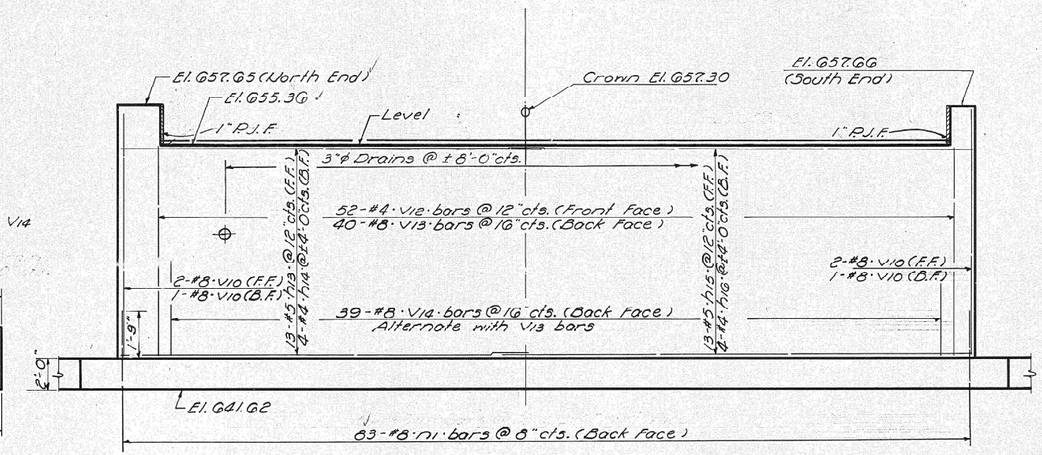

ELEVATION

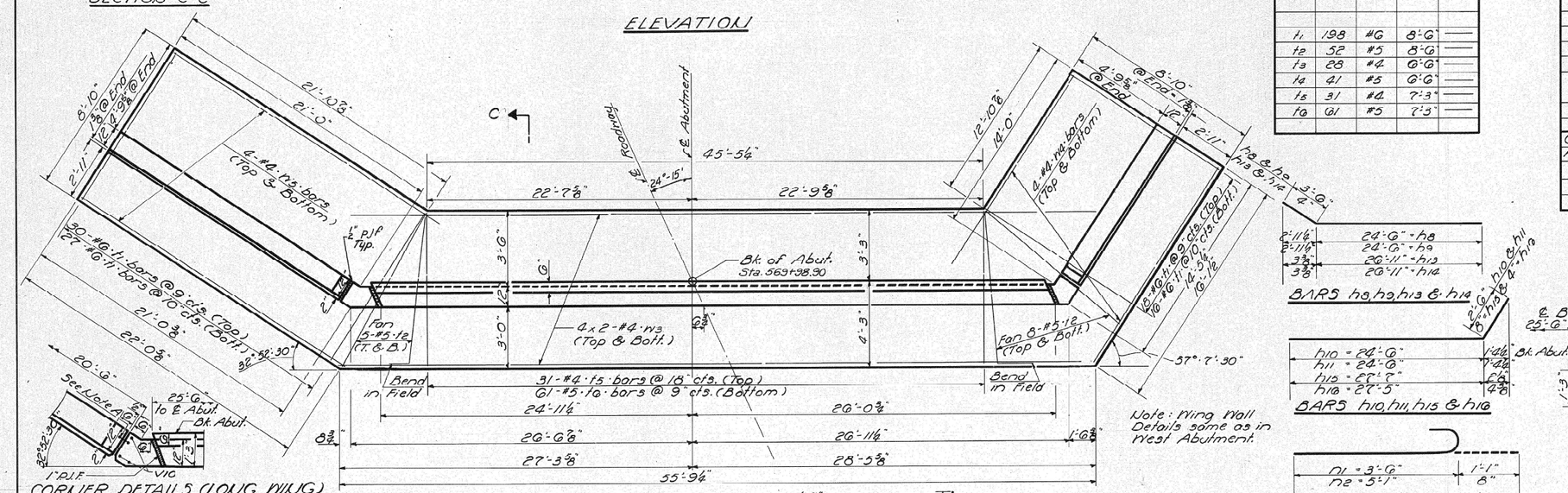

PLAN

Note: Wing Wall Details same as in West Abutment.

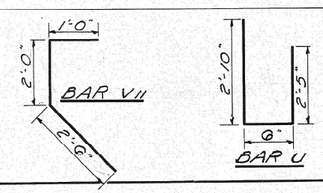

Maximum Footing Pressure — 1.75 Tsf.

Work this sheet with Sheet 4.

℄ ABUTMENTS BILL OF MATERIAL

Bar	No.	Size	Length	Shape
h4	30	#5	13'-3"	
h5	10	#4	13'-3"	
h6	10	#4	20'-3"	
h7	30	#5	20'-3"	
h8	3	#4	28'-0"	
h9	12	#5	28'-0"	
h10	3	#4	27'-0"	
h11	12	#5	27'-0"	
h12	18	#6	25'-0"	
h13	13	#5	27'-3"	
h14	4	#4	27'-3"	
h15	13	#5	28'-3"	
h16	4	#4	27'-9"	
n1	155	#8	4'-7"	
n2	70	#6	5'-9"	
n3	53	#9	5'-0"	
t1	198	#6	8'-6"	
t2	52	#5	8'-6"	
t3	28	#4	6'-6"	
t4	41	#5	6'-6"	
t5	31	#4	7'-3"	
t6	61	#5	7'-3"	

Bar	No.	Size	Length	Shape
U	51	#4	5'-9"	
V1	72	#7	5'-6"	
V2	60	#5	9'-9"	
V3	24	#5	8'-0"	
V4	24	#5	6'-3"	
V5	8	#4	13'-9"	
V6	8	#4	12'-0"	
V7	6	#4	10'-3"	
V8	51	#8	9'-0"	
V9	55	#5	10'-9"	
V10	12	#8	13'-9"	
V11	51	#5	5'-6"	
V12	52	#4	12'-6"	
V13	40	#8	11'-6"	
V14	39	#8	4'-6"	
W1	8	#4	12'-6"	
W3	40	#4	28'-6"	
W4	8	#4	15'-9"	
W5	8	#4	21'-6"	
Class X Conc.			Cu. Yd.	192.1
Reinf. Bars			Lbs.	17930

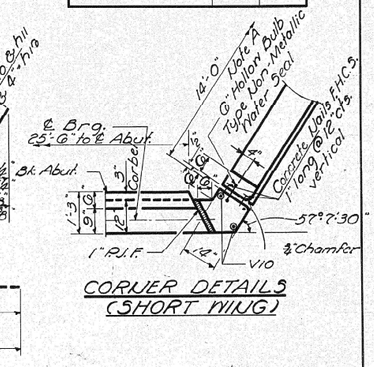

DESIGNED	Gwis Lander	
CHECKED	J.B. Henderson	
DRAWN	Gwis Lander / jacobs	
CHECKED		

EXAMINED — MAY 6 1966 — ENGINEER OF BRIDGE AND TRAFFIC STRUCTURES
PASSED — ENGINEER OF DESIGN
APPROVED — CHIEF HIGHWAY ENGINEER

EAST ABUTMENT
S.B.I. RT. 116 (FA 147) SEC. 112-BR
LIVINGSTON COUNTY
STA. 569 + 68

FOR INFORMATION ONLY

MODEL: Default
FILE NAME: c:\pw_work\pwidot\zagarjk\d1008618\66L79-EXISTING_STRUCTURE_PLANS.dgn

USER NAME = Joseph.Zagar	DESIGNED -	REVISED -	
	DRAWN -	REVISED -	
	CHECKED -	REVISED -	
PLOT DATE = 8/8/2024	DATE -	REVISED -	

STATE OF ILLINOIS
DEPARTMENT OF TRANSPORTATION

EXISTING STRUCTURE PLANS

SCALE: SHEET OF SHEETS STA. TO STA.

F.A.P RTE.	SECTION	COUNTY	TOTAL SHEETS	SHEET NO.
673	(112BR)BR	LIVINGSTON	65	56
		CONTRACT NO. 66L79		
		ILLINOIS FED. AID PROJECT		

(A)	TBT TY 13: MEASURED FROM FIRST POST OF GUARD RAIL.
(B)	SPBGR TY A 6 FT
(C)	TBT TY 1 (SP) TANG

NOTES

1 - THE LENGTH OF NEED IS MEASURED FROM END OF IL-OH RAILING.

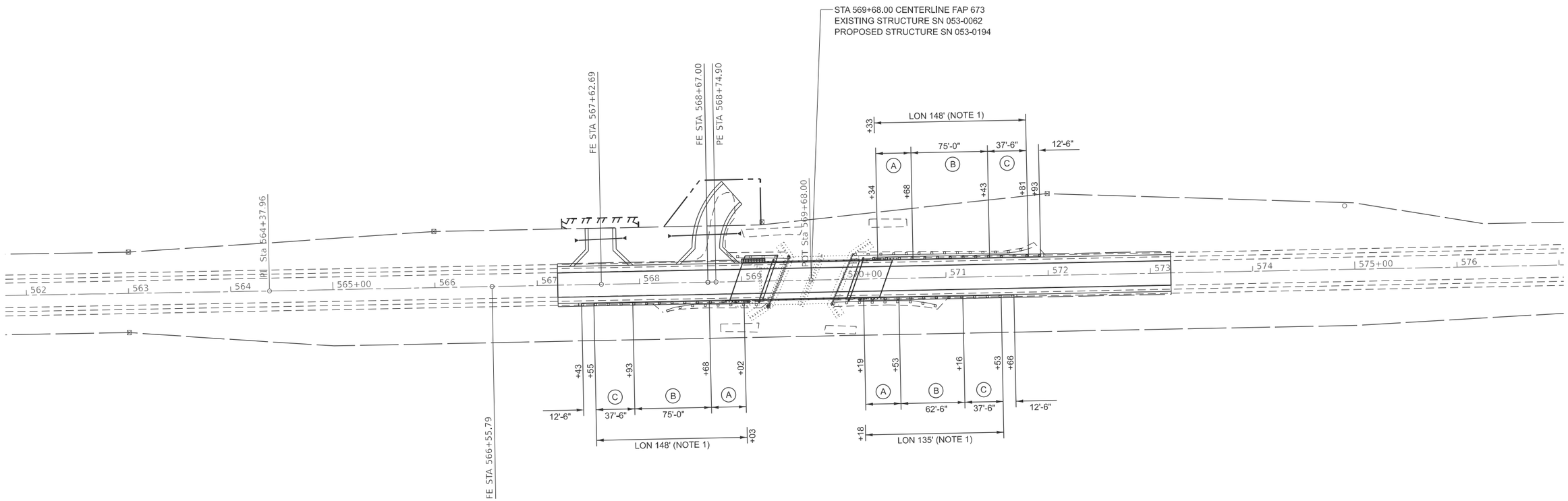

MODEL: Default
FILE NAME: c:\pw_work\pwidot\zagarjk\d1008618\66L79-GUARDRAIL_DETAIL.dgn

USER NAME = Joseph.Zagar	DESIGNED -	REVISED -	
	DRAWN -	REVISED -	
	CHECKED -	REVISED -	
PLOT DATE = 7/24/2024	DATE -	REVISED -	

STATE OF ILLINOIS
DEPARTMENT OF TRANSPORTATION

GUARDRAIL DETAIL

SCALE: | SHEET OF SHEETS | STA. TO STA.

F.A.P RTE.	SECTION	COUNTY	TOTAL SHEETS	SHEET NO.
673	(112BR)ES	LIVINGSTON	65	57

CONTRACT NO. 66L79

ILLINOIS | FED. AID PROJECT

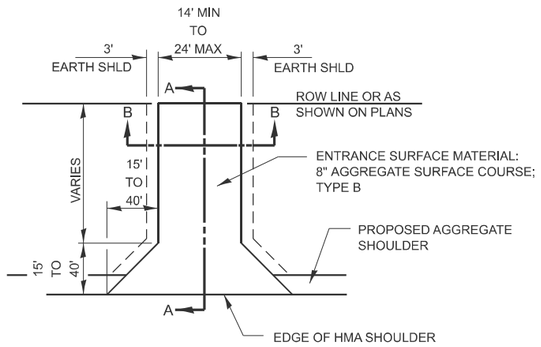

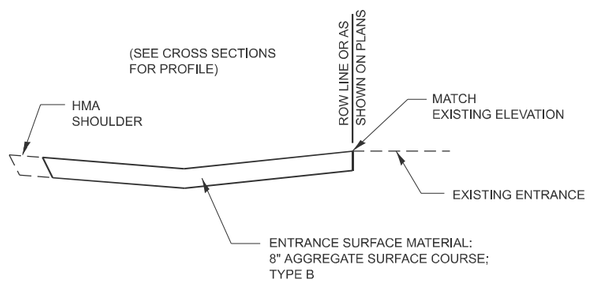

SECTION A-A

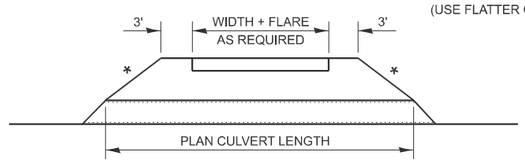

SECTION B-B

FIELD ENTRANCE DETAIL

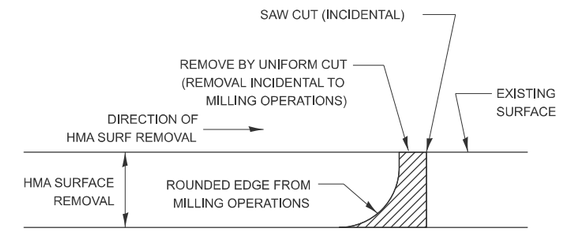

NOTE:

WHEN MILLING OPERATIONS PRODUCE A ROUNDED EDGE, THEN A SAW CUT SHALL BE USED TO MANUFACTURE A PERPENDICULAR EDGE AS SHOWN IN THE DETAIL. THE ENGINEER SHALL BE THE SOLE JUDGE CONCERNING THE USE OF THIS DETAIL

HMA BUTT JOINT SAW CUTS

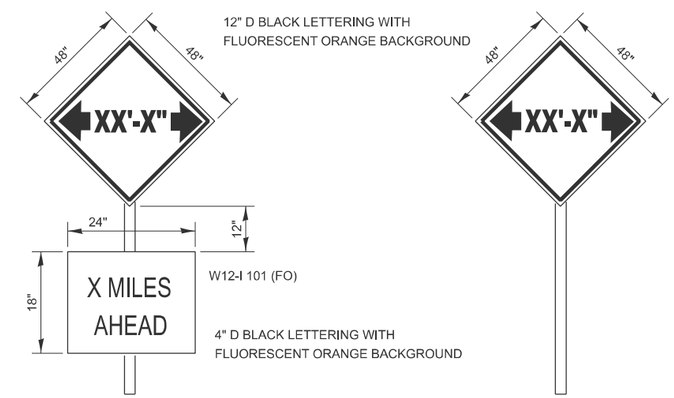

TO BE POST MOUNTED AS SHOWN ELSEWHERE IN THE PLANS.

COST OF SUPPLYING, INSTALLING, MAINTAINING AND REMOVING WIDTH RESTRICTION SIGNS SHALL BE INCLUDED IN THE COST OF THE TRAFFIC CONTROL AND PROTECTION PAY ITEMS.

WIDTH RESTRICTION SIGNING DETAILS

MODEL: Default
FILE NAME: c:\pw_work\pwidot\zagarjk\d1008618\d673-DETAILS.dgn

USER NAME = Joseph.Zagar	DESIGNED -	REVISED -	STATE OF ILLINOIS DEPARTMENT OF TRANSPORTATION
	DRAWN -	REVISED -	
	CHECKED -	REVISED -	
PLOT DATE = 8/16/2024	DATE -	REVISED -	

DETAILS

SCALE: SHEET OF SHEETS STA. TO STA.

F.A.P. RTE.	SECTION	COUNTY	TOTAL SHEETS	SHEET NO.
673	(112BR)ES	LIVINGSTON	65	58
		CONTRACT NO. 66L79		
	ILLINOIS	FED. AID PROJECT		

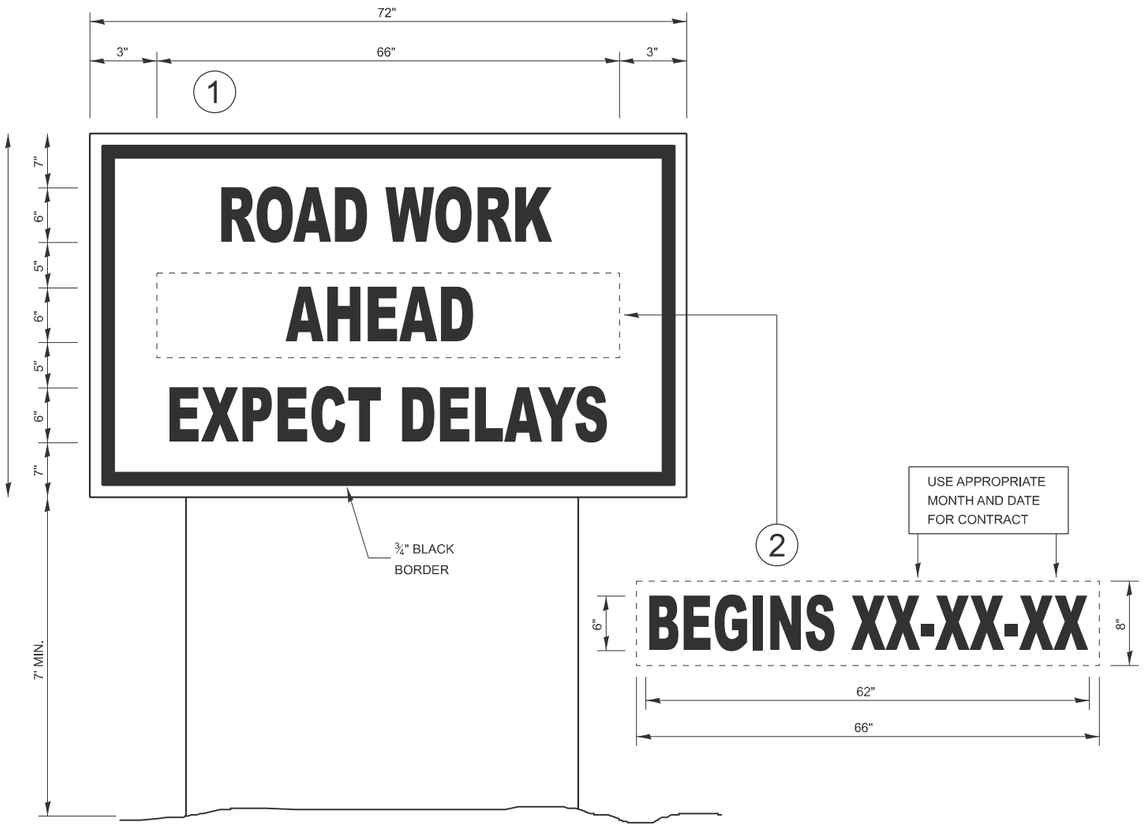

TEMPORARY INFORMATION SIGNING

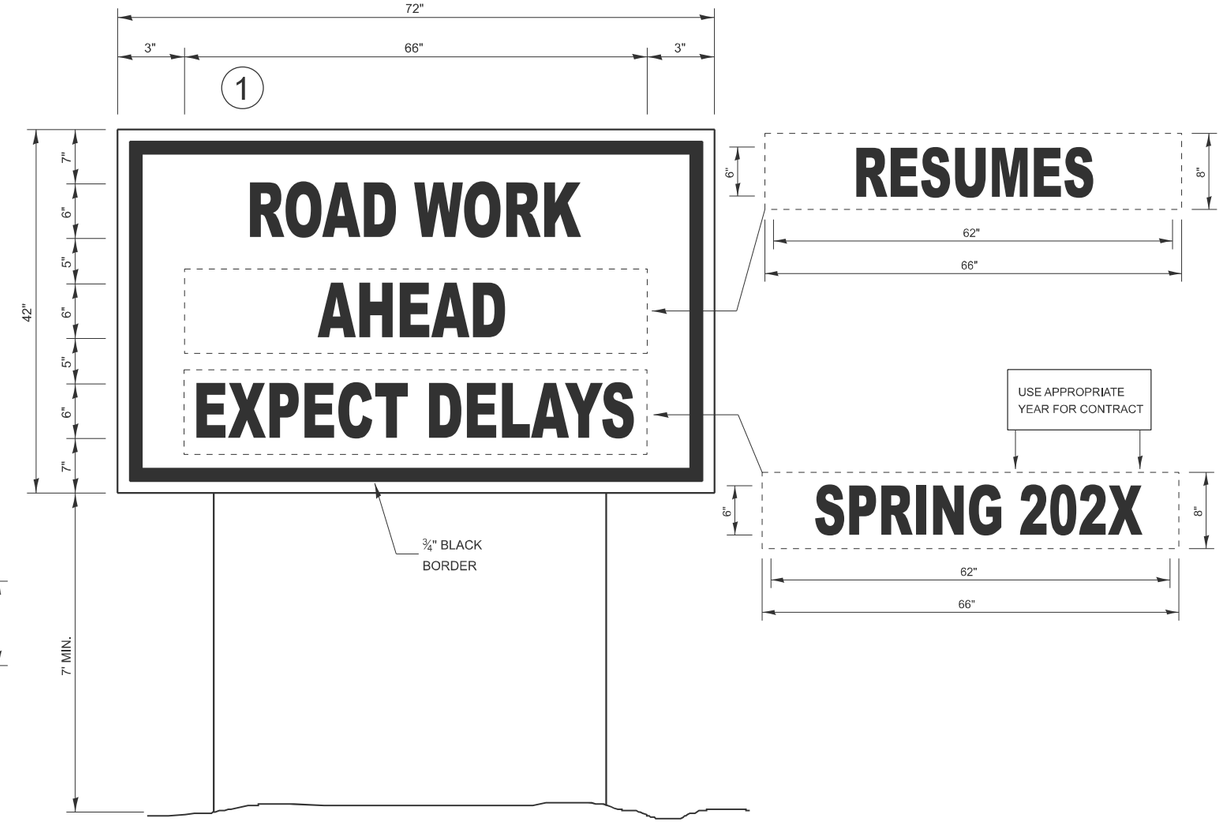

WINTER SHUT DOWN SIGNING

NOTES:

1. USE 6" D BLACK LETTERING ON FLOURESENT ORANGE BACKGROUND.
2. ERECT SIGNS AT LOCATIONS IN ADVANCE OF THE "ROAD CONSTRUCTION AHEAD" SIGNS AS DIRECTED BY THE ENGINEER.
3. ERECT SIGN 1 WITH INSTALLED PANEL 2 A MINIMUM OF ONE WEEK PRIOR TO THE START OF THE LANE CLOSURE.
4. REMOVE PANEL 2 ON THAT DATE.
5. SEE SPECIAL PROVISION "TEMPORARY INFORMATION SIGNING" FOR ADDITIONAL INFORMATION.
6. WILL BE PAID FOR PER SQ FT AS "TEMPORARY INFORMATION SIGNING". EACH SIGN = 21 SQ FT AND THE DATE PANEL 2 WILL NOT BE MEASURED SEPARATELY FOR PAYMENT.

MODEL: Default
FILE NAME: c:\pw_work\pwidot\zagarjkd\d1008618\d679-DETAILS.dgn

USER NAME = Joseph.Zagar	DESIGNED -	REVISED -	STATE OF ILLINOIS DEPARTMENT OF TRANSPORTATION
	DRAWN -	REVISED -	
	CHECKED -	REVISED -	
PLOT DATE = 8/16/2024	DATE -	REVISED -	

DETAILS

SCALE: SHEET OF SHEETS STA. TO STA.

F.A.P. RTE.	SECTION	COUNTY	TOTAL SHEETS	SHEET NO.
673	(112BR)ES	LIVINGSTON	65	59
		CONTRACT NO. 66L79		
		ILLINOIS FED. AID PROJECT		

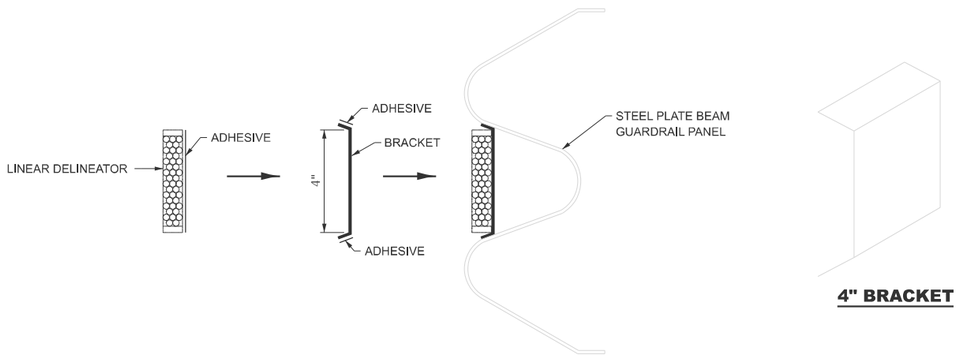

LINEAR DELINEATOR APPLICATION TO STANDARD GALVANIZED GUARDRAIL

LINEATOR DELINEATOR SHALL BE APLLIED ACCORDING TO THE MANUFACTURER'S RECOMMENDATIONS

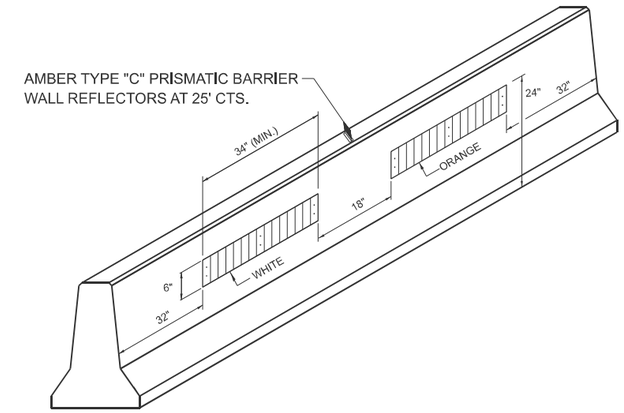

LINEAR DELINEATOR PANELS FOR TEMPORARY CONCRETE BARRIER

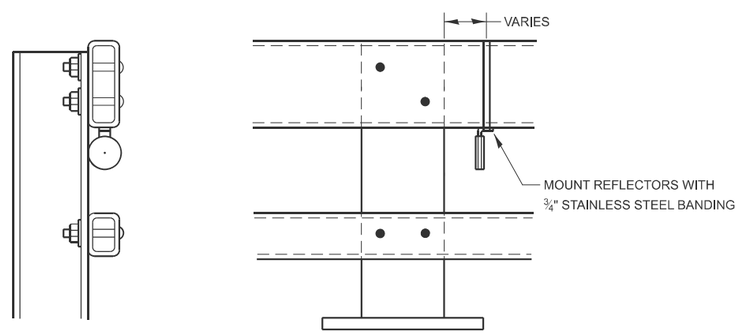

NOTES

1. REFLECTORS SHALL MEET THE REQUIREMENTS OF ARTICLE 1097.03 OF THE STANDARD SPECIFICATIONS.

2. FURNISHING AND INSTALLING THE COMPLETE REFLECTOR UNIT WILL WILL BE PAID AT THE CONTRACT UNIT PRICE EACH FOR GUARD RAIL MARKERS.

REFLECTOR MOUNTING DETAIL FOR STEEL RAIL

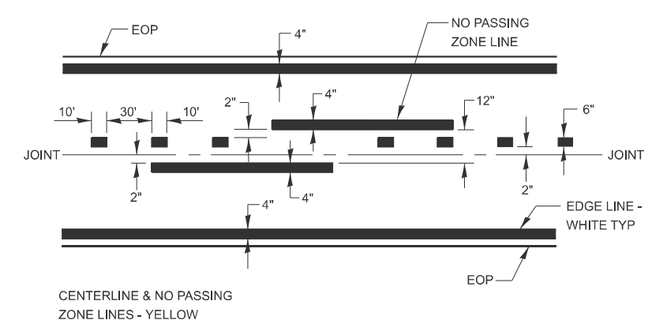

PAVEMENT MARKING

MODEL: Default
FILE NAME: c:\pw_work\pwidot\zagarjk\d1008618\66l79-DETAILS.dgn

USER NAME = Joseph.Zagar	DESIGNED -	REVISED -	STATE OF ILLINOIS DEPARTMENT OF TRANSPORTATION
	DRAWN -	REVISED -	
	CHECKED -	REVISED -	
PLOT DATE = 8/16/2024	DATE -	REVISED -	

DETAILS

SCALE: SHEET OF SHEETS STA. TO STA.

F.A.P. RTE.	SECTION	COUNTY	TOTAL SHEETS	SHEET NO.
673	(112BR)ES	LIVINGSTON	65	60
		CONTRACT NO. 66L79		
	ILLINOIS	FED. AID PROJECT		

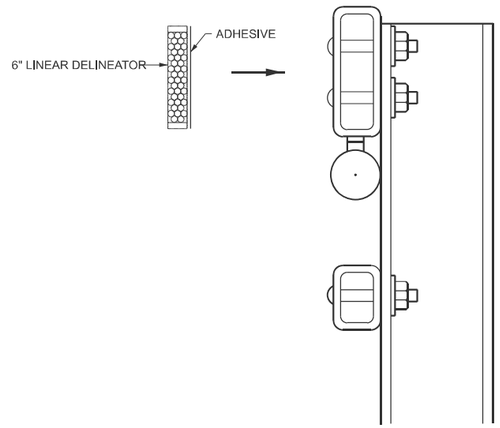

4" LINEAR DELINEATOR APPLICATION TO STEEL RAIL

LINEATOR DELINEATOR SHALL BE APLLIED ACCORDING TO THE MANUFACTURER'S RECOMMENDATIONS

MODEL: Default
FILE NAME: c:\pw_work\pwidot\zagarjk\d1008618\66l79-DETAILS.dgn

USER NAME = Joseph.Zagar	DESIGNED -	REVISED -	STATE OF ILLINOIS DEPARTMENT OF TRANSPORTATION
	DRAWN -	REVISED -	
	CHECKED -	REVISED -	
PLOT DATE = 8/16/2024	DATE -	REVISED -	

DETAILS

SCALE: SHEET OF SHEETS STA. TO STA.

F.A.P. RTE.	SECTION	COUNTY	TOTAL SHEETS	SHEET NO.
673	(112BR)ES	LIVINGSTON	65	61

CONTRACT NO. 66L79

ILLINOIS FED. AID PROJECT

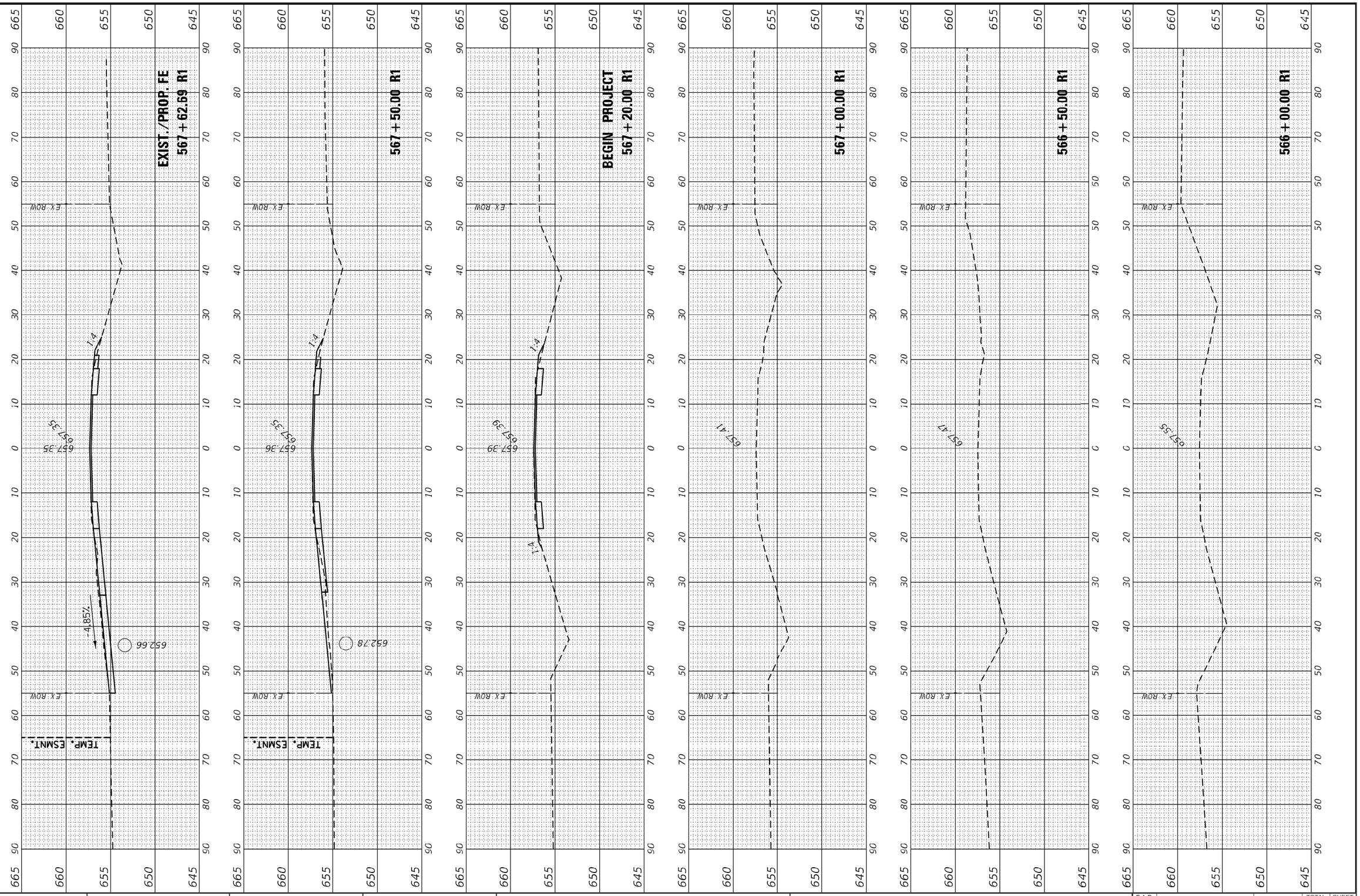

ORIGINAL SURVEY	BY	DATE
SURVEYED		
PLOTTED		
TEMPLATE		
AREAS		
AREAS CHECKED		
NOTE BOOK		
NO.		

FINAL SURVEY	BY	DATE
SURVEYED		
PLOTTED		
TEMPLATE		
AREAS		
AREAS CHECKED		
NOTE BOOK		
NO.		

MODEL: Default
FILE NAME: c:\pw_work\pwidot\zagarjk\d1008618\66L79-XSECTIONS.dgn

USER NAME = Joseph.Zagar	DESIGNED -	REVISED -
	DRAWN -	REVISED -
	CHECKED -	REVISED -
PLOT DATE = 6/24/2024	DATE -	REVISED -

STATE OF ILLINOIS
DEPARTMENT OF TRANSPORTATION

CROSS SECTIONS

SCALE: | SHEET OF SHEETS | STA. TO STA.

F.A.P RTE.	SECTION	COUNTY	TOTAL SHEETS	SHEET NO.
673	(112BR)ES	LIVINGSTON	65	62

CONTRACT NO. 66L79

ILLINOIS | FED. AID PROJECT

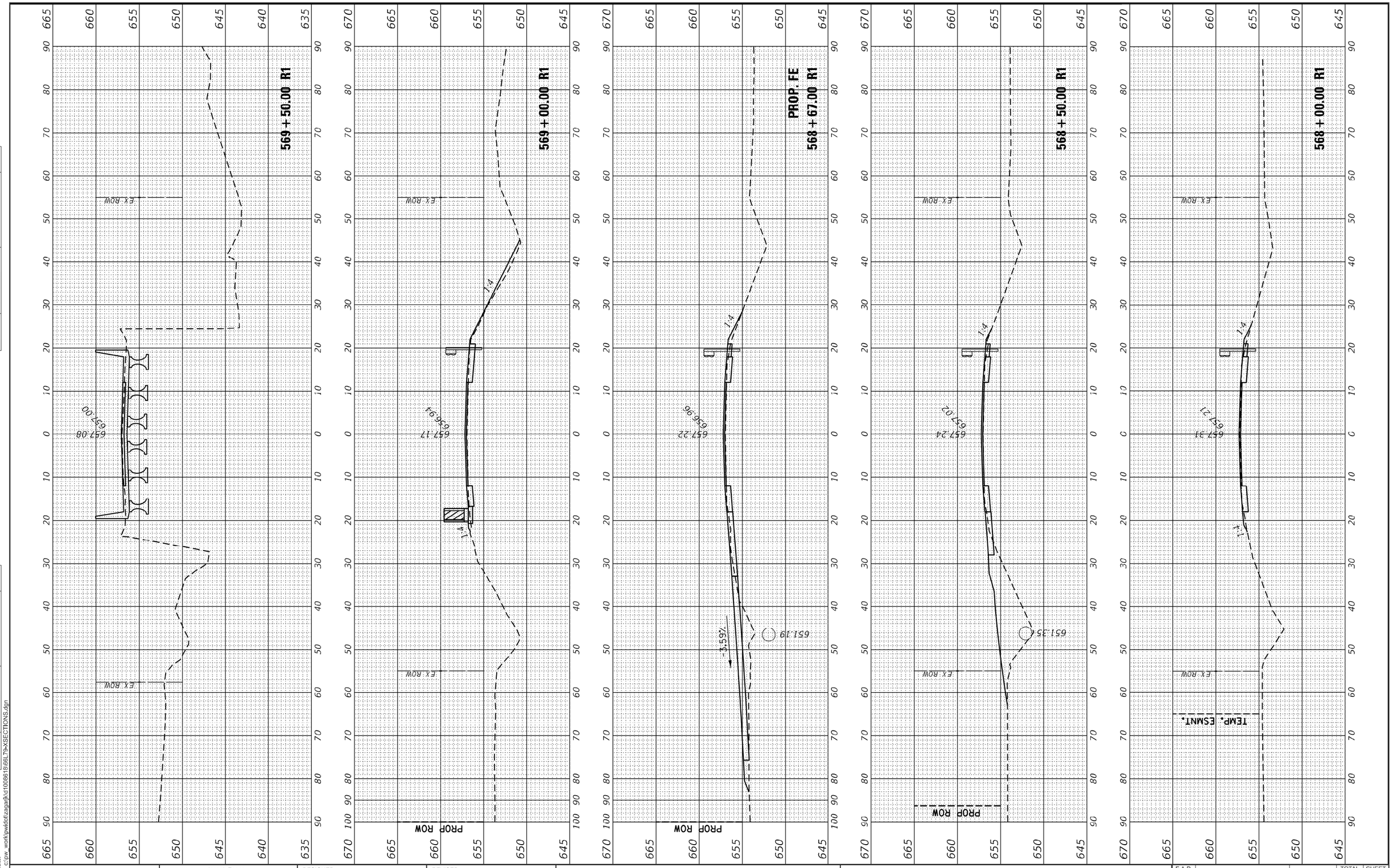

ORIGINAL SURVEY		BY	DATE
	SURVEYED		
	PLOTTED		
NOTE BOOK	TEMPLATE		
	AREAS		
NO.	AREAS CHECKED		

FINAL SURVEY		BY	DATE
	SURVEYED		
	PLOTTED		
NOTE BOOK	TEMPLATE		
	AREAS		
NO.	AREAS CHECKED		

MODEL: Default
FILE NAME: c:\pw_work\pwidot\zagarjk\d1008618\66L79-XSECTIONS.dgn

USER NAME = Joseph.Zagar	DESIGNED -	REVISED -	
	DRAWN -	REVISED -	
	CHECKED -	REVISED -	
PLOT DATE = 6/24/2024	DATE -	REVISED -	

STATE OF ILLINOIS
DEPARTMENT OF TRANSPORTATION

CROSS SECTIONS

SCALE: | SHEET OF SHEETS | STA. TO STA.

F.A.P RTE.	SECTION	COUNTY	TOTAL SHEETS	SHEET NO.
673	(112BR)ES	LIVINGSTON	65	63
		CONTRACT NO. 66L79		
		ILLINOIS FED. AID PROJECT		

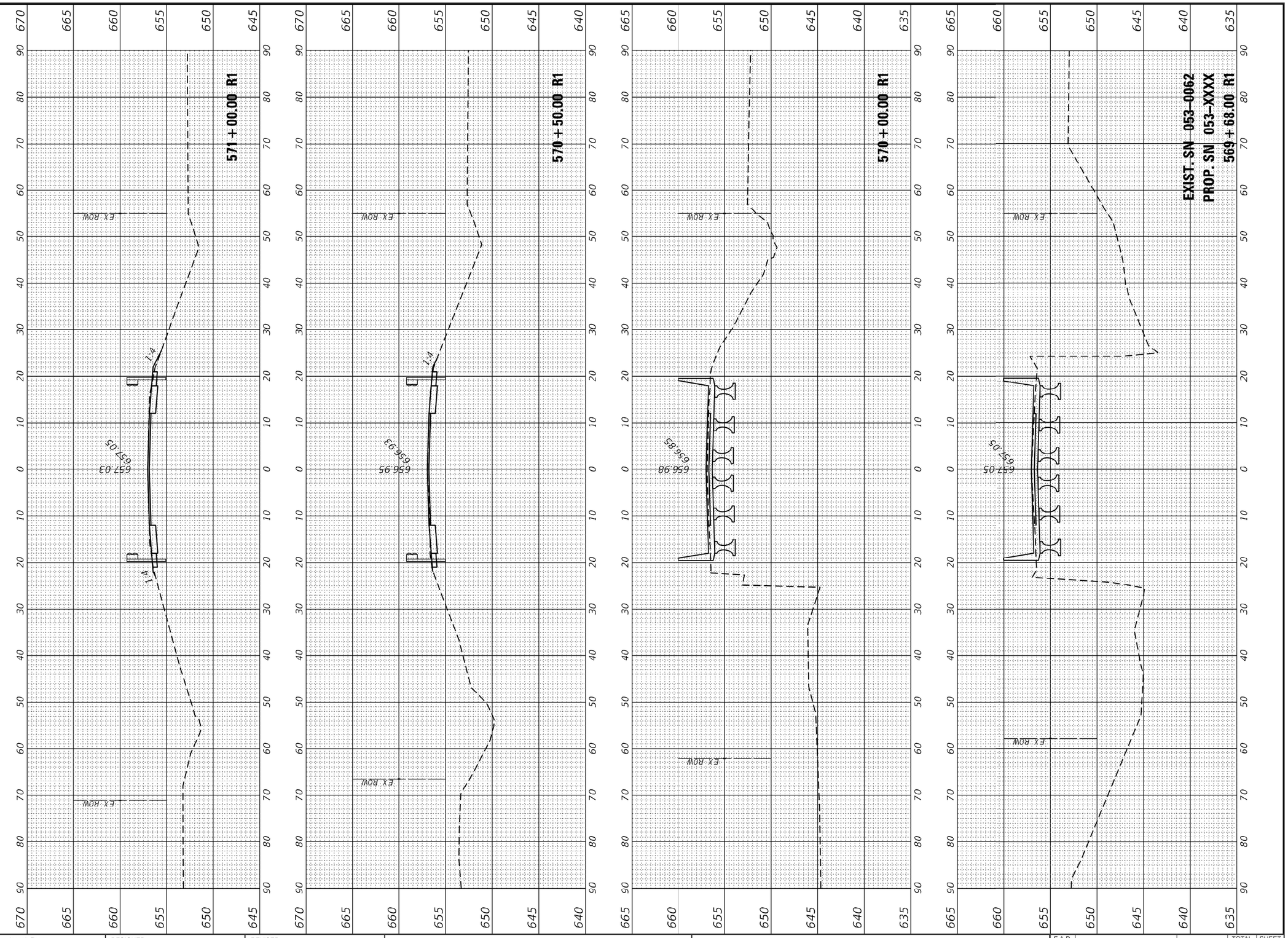

FINAL SURVEY		BY	DATE
NOTE BOOK	SURVEYED		
	PLOTTED		
	TEMPLATE		
	AREAS		
NO.	AREAS CHECKED		

ORIGINAL SURVEY		BY	DATE
NOTE BOOK	SURVEYED		
	PLOTTED		
	TEMPLATE		
	AREAS		
NO.	AREAS CHECKED		

MODEL: Default
FILE NAME: c:\pw_work\pwidot\zagarjk\d1008618\66L79-XSECTIONS.dgn

USER NAME = Joseph.Zagar	DESIGNED -	REVISED -
	DRAWN -	REVISED -
	CHECKED -	REVISED -
PLOT DATE = 6/24/2024	DATE -	REVISED -

STATE OF ILLINOIS
DEPARTMENT OF TRANSPORTATION

CROSS SECTIONS

SCALE: | SHEET OF SHEETS | STA. TO STA.

F.A.P RTE.	SECTION	COUNTY	TOTAL SHEETS	SHEET NO.
673	(112BR)ES	LIVINGSTON	65	64
		CONTRACT NO. 66L79		
		ILLINOIS	FED. AID PROJECT	

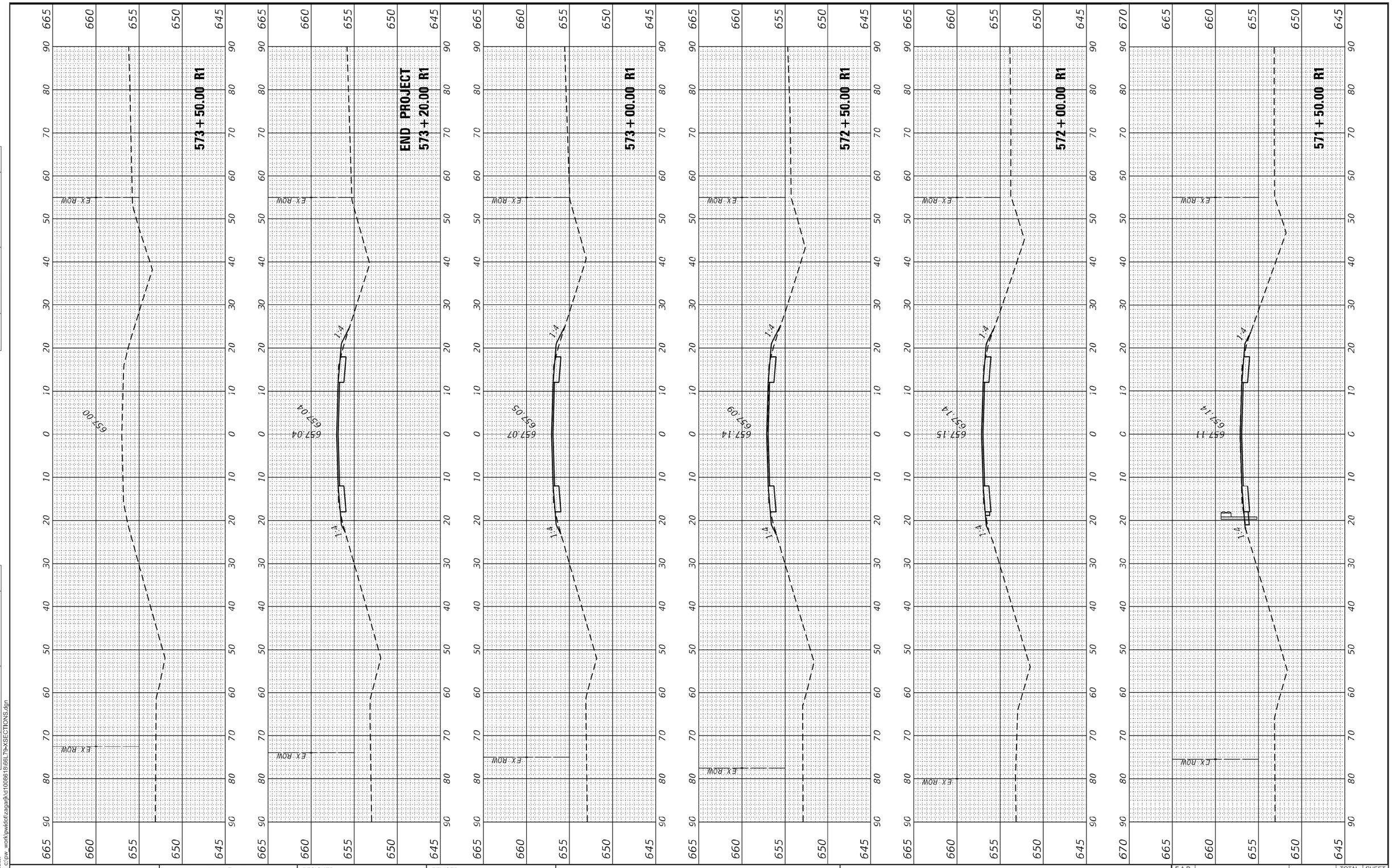

FINAL SURVEY	BY	DATE
SURVEYED		
PLOTTED		
TEMPLATE		
AREAS		
AREAS CHECKED		
NOTE BOOK		
NO.		

ORIGINAL SURVEY	BY	DATE
SURVEYED		
PLOTTED		
TEMPLATE		
AREAS		
AREAS CHECKED		
NOTE BOOK		
NO.		

MODEL: Default
FILE NAME: c:\pw_work\pwidot\zagarjk\d1008618\66L79-XSECTIONS.dgn

USER NAME = Joseph.Zagar	DESIGNED -	REVISED -
	DRAWN -	REVISED -
	CHECKED -	REVISED -
PLOT DATE = 6/24/2024	DATE -	REVISED -

STATE OF ILLINOIS
DEPARTMENT OF TRANSPORTATION

CROSS SECTIONS

SCALE: | SHEET OF SHEETS | STA. TO STA.

F.A.P RTE.	SECTION	COUNTY	TOTAL SHEETS	SHEET NO.
673	(112BR)ES	LIVINGSTON	65	65

CONTRACT NO. 66L79

ILLINOIS | FED. AID PROJECT