| F.A. RTE. | SECTION | COUNTY | TOTAL SHEETS | SHEET NO. |
|---|---|---|---|---|
| FAI 74 | (72,90)10D-1 | PEORIA | 136 | 1 |

* IR-74-4(184)93

# STATE OF ILLINOIS
# DEPARTMENT OF TRANSPORTATION
# DIVISION OF HIGHWAYS

# PLANS FOR PROPOSED
# FEDERAL AID INTERSTATE HIGHWAY

## F.A.I. ROUTE 74
## SECTION (72, 90) 10D-1
## PROJECT IR-74-4(184)93
## PEORIA & TAZEWELL COUNTIES
## C-94-002-83

P-94-005-01

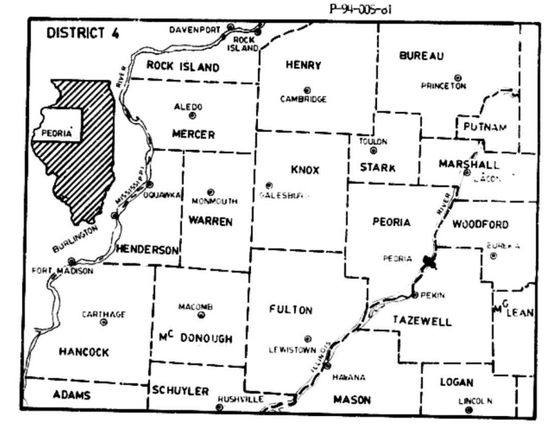


LOCATION OF SECTION INDICATED THUS: —

THE PROPOSED IMPROVEMENT

INCLUDES FURNISHING OF ALL LABOR AND MATERIALS NECESSARY TO COMPLETE THE CONSTRUCTION OF PROJECT FAI 74 SEC. (72, 90) 10D-1 IN PEORIA & TAZEWELL COUNTIES. THE WORK INCLUDES REMOVAL & REPLACEMENT OF ENTIRE BRIDGE DECK, REMOVE AND REPLACE EXISTING RAIL & POST WITH CONCRETE PARAPET; REPAIR SOME SUB STRUCTURE ELEMENTS AND REPAIR OR REPLACE SOME STRUCTURAL STEEL ELEMENTS; REMOVE AND REPLACE BEARING AS SHOWN ON PLAN; PROVIDE SOME NEW EXPANSION DEVICES; PAINT THE ENTIRE STRUCTURE; PROVIDE NEW ELECTRIC WIRING & CONSTRUCT NEW APPROACH SLABS AS OUTLINED IN PLANS.

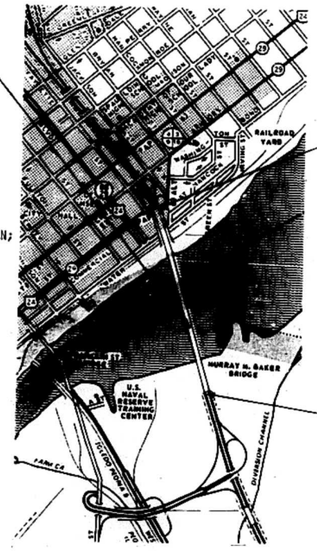


BEGIN PROJECT
FAI 74 SEC. (72,90) 10D-1
STA 135+71.95

END PROJECT
FAI 74 SEC. (72,90) 10D-1
STA. 168+61.33

STATE OF ILLINOIS
DEPARTMENT OF TRANSPORTATION
DIVISION OF HIGHWAYS

SUBMITTED 12-1 1983 — DISTRICT ENGINEER
EXAMINED 1-24 1984 — ENGINEER OF PLANS AND CONTRACTS
PASSED 1-24 1984 — ENGINEER OF DESIGN
APPROVED 1-24 1984 — CHIEF ENGINEER OF HIGHWAYS

U.S. DEPARTMENT OF TRANSPORTATION
FEDERAL HIGHWAY ADMINISTRATION

APPROVED

DIVISION ADMINISTRATOR DATE

CONTRACT NO. 36816

PEORIA TAZEWELL COUNTY SECTION (72,90) 10D-1 ROUTE FAI 74

| ROUTE | | SECTION | COUNTY | SHEET TOTAL | SHEET NO. |
|---|---|---|---|---|---|
| FAI | 74 | (72,90) 10D-1 | PEORIA TAZEWELL | 136 | 2 |
| MKD. | | | | | |
| PROJ. | | STA. | | | |

INDEX OF SHEETS


1. COVER SHEET
2. INDEX OF SHEETS, SIGNATURE BOXES
3-4. SUMMARY OF QUANTITIES
5. LOCATION MAP
6-23. DETOUR PLANS (INCLUDES 16A)
* 24-116I BRIDGE PLANS
117-125. HIGHWAY LIGHTING & NAVIGATIONAL LIGHTS
126. OUTLET FOR BRIDGE CLOSED DRAINAGE SYSTEM
127. PATCHING SCHEDULE, HAND HOLE SCREEN DETAILS
128. APPROACH SHOULDER PAVEMENT
129. DETAIL VISUAL SCREEN (TEMPORARY)
130. DETAIL VISUAL SCREEN
131. DETAIL BRIDGE APPROACH PAVEMENT
132. DETAILS: FULL DEPTH SAW CUT
INLET WITH TYPE 20 FRAME AND GRATE
CONCRETE CURB, TYPE B (MODIFIED)
133. PLAN DETAILS
134. TRAFFIC CONTROL & PROTECTION U-2
135. TRAFFIC CONTROL & PROTECTION U-3
136. BRIDGE APPROACH SHOULDER PAVEMENT WITH TYPE C & D INLET BOX


* DELETED SHEETS 27, 34-44, 87-98, 106 & 115

STANDARDS 1527-9
1686-4
1973
2113-2
2122-11
2130-7
2213-4
2220-13
2298-7
2299-9
2300-2
2308-3
2311-7
2313-4
2314-4
2321-5
2333-2
2336-3
2337-2
2353-5
2383-1
2385
2387

REVIEWED FOR CORRELATION WITH APPROVED DESIGN REPORT AND ENVIRONMENTAL ASSESSMENT
District Engineer of Planning
Date 11-23-83

SUBMITTED November 30, 1983
DIST. DESIGN ENGR.

EXAMINED November 30, 1983
DIST. BRIDGE ENGR.

EXAMINED November 30, 1983
DIST. HIGHWAY ENGR.

EXAMINED 11-23-83
DIST. TRAFFIC ENGR.

Entire section inspected and approved as to policy.

DATE 12-1-83
DISTRICT ENGINEER

Rev. 1-31-84

# SUMMARY OF QUANTITIES

| LOCATION | | | | | | | | | | | |
|---|---|---|---|---|---|---|---|---|---|---|---|
| CONSTRUCTION TYPE CODE | | | | X035 41 | X035 41 | | | | | | |
| CODE NO. | ITEM | UNIT | TOTAL QUANTITY | TAZEWELL COUNTY | PEORIA COUNTY | (APPR PAVT) TAZEWELL | (APPR PAVT) PEORIA | | | | |
| 215012 | AGGREGATE SHOULDERS, TYPE B | TON | 55 | | 55 | | | | | | |
| 219008 | BITUMINOUS SHOULDERS, 10" | SQ.YD. | 272 | | 272 | | | | | | |
| 305095 | PORTLAND CEMENT CONCRETE BASE COURSE WIDENING 10" | SQ.YD. | 666 | | 666 | | | | | | |
| 406013 | BITUMINOUS CONCRETE SUFACE COURSE, MIXTURE D; CLASS I | TON | 19 | | 19 | | | | | | |
| 40700" | INCIDENTAL BITUMINOUS SURFACING | TON | 2 | | 2 | | | | | | |
| 408015 | P.C. CONCRETE BRIDGE APPROACH SHOULDER PAVEMENT | SQ.YD. | 33 | 16 | 17 | | | | | | |
| 501024 | CONCRETE REMOVAL | CU.YD. | 4.5 | 3 | 1.5 | | | | | | |
| 501048 | REMOVAL OF EXISTING CONCRETE DECK | L.SUM | 1 | 0.5 | 0.5 | | | | | | |
| 503001 | FLOOR DRAINS | EACH | 55 | 16 | 39 | | | | | | |
| 503302 | CLASS X CONCRETE HEADWALLS | CU.YD. | 1 | | 1 | | | | | | |
| 503003 | PROTECTIVE COAT | SQ.YD. | 25,290 | 13,300 | 11,990 | | | | | | |
| 504003 | CLASS X CONCRETE | CU.YD. | 5,859.4 | 3,076 | 2,783.4 | | | | | | |
| 507004 | FURNISHING AND ERECTING STRUCTURAL STEEL | POUND | 987,680 | 493,840 | 493,840 | | | | | | |
| 508010 | HANDRAIL REMOVAL | LIN.FT | 6,440 | 3,458 | 2,982 | | | | | | |
| 509003 | CLEANING AND PAINTING STEEL BRIDGE | L.SUM. | 1 | 0.5 | 0.5 | | | | | | |
| 512001 | REINFORCEMENT BARS | POUND | 16,400 | 1,290 | 1,250 | [illegible] | [illegible] | | | | |
| 512002 | REINFORCEMENT BARS (EPOXY COATED) | POUND | [illegible] | 143,366 | 672,545 | | | | | | |
| 514001 | NAME PLATES | EACH | 1 | 0.5 | 0.5 | | | | | | |
| 603005 | STORM SEWERS, TYPE 1 12" | LIN.FT | 4 | 2 | 2 | | | | | | |
| 603007 | STORM SEWERS, TYPE 1 15" | LIN.FT | 390 | 85 | 305 | | | | | | |
| 612362 | INLET TYPE A, TYPE 8 GRATE | EACH | 1 | | 1 | | | | | | |
| 612555 | MANHOLES TO BE ADJUSTED | EACH | 1 | | 1 | | | | | | |
| 612604 | INLETS TO BE ADJUSTED WITH NEW TYPE 1 FRAME, CLOSED LID | EACH | 1 | | 1 | | | | | | |
| 612652 | INLETS TO BE REMOVED | EACH | 5 | 1 | 4 | | | | | | |
| X61285 | TYPE D INLET BOX, STANDARD 2324 SPECIAL | EACH | 4 | 2 | 2 | | | | | | |
| 616009 | CONCRETE CURB, TYPE B (MODIFIED) | LIN.FT | 52 | | 52 | | | | | | |
| 616011 | CONCRETE CURB, TYPE M | LIN.FT | 35 | | 35 | | | | | | |
| 616016 | BITUMINOUS CONCRETE CURB | LIN.FT | 1571 | | 1571 | | | | | | |
| 616092 | COMBINATION CONCRETE CURB AND GUTTER, TYPE M-6.12 | LIN.FT | 25 | | 25 | | | | | | |
| 616116 | COMBINATION CONCRETE CURB AND GUTTER (SPECIAL) | LIN.FT | 18 | | 18 | | | | | | |
| 617004 | GUTTER REMOVAL | LIN.FT | 234 | | 234 | | | | | | |
| 617005 | COMBINATION CURB AND GUTTER REMOVAL | LIN.FT | 1235 | | 1235 | | | | | | |
| 620034 | PAVEMENT REMOVAL AND PORTLAND CEMENT CONCRETE REPLACEMENT, TYPE I | SQ.YD | 10 | | 10 | | | | | | |
| 620035 | PAVEMENT REMOVAL AND PORTLAND CEMENT CONCRETE REPLACEMENT, TYPE II | SQ.YD | 306 | | 306 | | | | | | |
| 628031 | TRAFFIC BARRIER TERMINAL, TYPE I | EACH | 1 | | 1 | | | | | | |
| 628032 | TRAFFIC BARRIER TERMINAL, TYPE 2 | EACH | 1 | | 1 | | | | | | |
| 629103 | CHAIN LINK FENCE REMOVAL | LIN.FT | 212 | | 212 | | | | | | |
| 633006 | STEEL PLATE BEAM GUARD RAIL REMOVAL, SINGLE RAIL | LIN.FT | 553 | | 553 | | | | | | |
| 646004 | ENGINEER'S FIELD OFFICE, TYPE A | CAL MO | 20 | 10 | 10 | | | | | | |
| 647003 | PAVEMENT MARKING TAPE (SPECIAL) | LIN.FT | 12090 | 2914 | 9176 | | | | | | |
| 648018 | TRAFFIC CONTROL AND PROTECTION SPECIAL | L.SUM | 1 | 0.3 | 0.7 | | | | | | |
| 648035 | TRAFFIC CONTROL AND PROTECTION U-2 | L.SUM | 1 | | 1 | | | | | | |
| 648036 | TRAFFIC CONTROL AND PROTECTION U-3 | L.SUM | 1 | | 1 | | | | | | |
| * L02200 | POLE FOUNDATION | EACH | 2 | | 2 | | | | | | |
| * L02781 | ELECTRIC CABLE UNIT DUCT, 2-600 VXLP #6; 1 INCH POLYETHYLENE | LIN FT | 308 | | 308 | | | | | | |
| * L03750 | CONTROL INSTALLATION, TYPE CB-RCS-100-240 | EACH | 1 | | 1 | | | | | | |
| * L04947 | NAVIGATION LIGHTING SYSTEM | L.SUM | 1 | 0.5 | 0.5 | | | | | | |

| LOCATION | | | | | |
|---|---|---|---|---|---|
| CONSTRUCTION TYPE CODE | | | | | |
| CODE NO. | ITEM | UNIT | TOTAL QUANTITY | TAZEWELL COUNTY | PEORIA COUNTY |
| * L05180 | ELECTRIC CONDUCTOR (BARE ANNEALED COPPER) NO. 6 | LIN.FT | 308 | | 308 |
| * L05666 | ELECTRIC CABLE IN CONDUIT, 600V (XLP-TYPE USE) 1/C NO. 6 | LIN.FT | 13364 | 6500 | 6864 |
| * L05676 | LAMP, 250 WATT, HPS | EACH | 2 | | 2 |
| * L06203 | POLE, METAL 45 FT. M.H., 6 FT. DAVIT ARM | EACH | 2 | | 2 |
| * L06428 | POLE, METAL 33 FT. M.H., 6 FT. DAVIT AREM | EACH | 8 | 5 | 3 |
| * L06152 | LUMINAIRE RECTILINEAR TYPE: 250 WATT, H.P.S. | EACH | 2 | | 2 |
| * X04846 | ELECTRIC CABLE IN CONDUIT, 600V (XLP-TYPE USE) 1/C NO. 12 | LIN.FT | 2500 | 1250 | 1250 |
| * L04300 | TRENCH AND BACKFILL | LIN.FT | 300 | | 300 |
| * T50202 | PAINT PAVEMENT MARKING-LINE 4" | LIN.FT | 43140 | 15587 | 27553 |
| * T50205 | PAINT PAVEMENT MARKING-LINE 8" | LIN.FT | 1300 | | 1300 |
| * T50207 | PAINT PAVEMENT MARKING-LINE 24" | LIN.FT | 215 | | 215 |
| * X03965 | REMOVE AND REINSTALL EXISTING LIGHT STANDARD | EACH | 1 | | 1 |
| * L05699 | REMOVE EXISTING LIGHT STANDARD | EACH | 1 | | 1 |
| X04748 | MOBILIZATION | L.SUM | 1 | 0.5 | 0.5 |
| * L06424 | HANDHOLE TO BE SEALED | EACH | 1 | | 1 |
| XZ1415 | DRAINAGE SYSTEM | L.SUM | 1 | | 1 |
| X07755 | BUTT JOINT | EACH | 2 | | 2 |
| X08123 | TUBULAR BEAM MEDIAN BARRIER REMOVAL | LIN.FT | 3634 | 1620 | 2014 |
| X40830 | BRIDGE APPROACH PAVEMENT (STD 2353) SPEC [illegible] | SQ.YD. | 227 | 112 | 115 |
| X50313 | PREFORMED JOINT SEAL 2 1/2 INCHES | LIN.FT | 1534 | [illegible] | [illegible] |
| X50315 | ELASTOMERIC BEARING ASSEMBLY, TYPE I | EACH | 62 | [illegible] | [illegible] |
| X50316 | ELASTOMERIC BEARING ASSEMBLY, TYPE II | EACH | 16 | [illegible] | |
| X61264 | DRAINAGE STRUCTURES, TYPE 2 WITH TWO TYPE 22 FRAMES AND GRATES | EACH | 1 | | 1 |
| X61429 | FRAMES AND GRATES, TYPE 20 | EACH | 2 | | 2 |
| X61638 | CONCRETE BARRIER, DOUBLE FACE | LIN.FT | 1071 | 588 | 483 |
| X61640 | TEMPORARY CONCRETE BARRIER | LIN.FT | 5200 | 1593 | 3607 |
| X61641 | TEMPORARY CONCRETE BARRIER, TERMINAL SECTION | EACH | 3 | ? | 1 |
| X61642 | RELOCATE TEMPORARY CONCRETE BARRIER | LIN.FT | 4565 | 2593 | 1972 |
| X61685 | TEMPORARY CONCRETE BARRIER (SPECIAL) | LIN.FT | 1670 | 1241 | 429 |
| X62837 | STEEL PLATE BEAM GUARD RAIL, TYPE A | LIN.FT | 239 | | 239 |
| X62842 | TRAFFIC BARRIER TERMINAL, TYPE 5 | EACH | 2 | 1 | 1 |
| X62844 | TRAFFIC BARRIER TERMINAL, TYPE 6 | EACH | 2 | 1 | 1 |
| Z10282 | NEOPRENE EXPANSION JOINT 6 1/2" | LIN.FT | 190 | 64 | 126 |
| Z10281 | NEOPRENE EXPANSION JOINT 4" | LIN.FT | 190 | 126 | 64 |
| Z10283 | NEOPRENE EXPANSION JOINT 9" | LIN.FT | 64 | 64 | - |
| XZ1264 | EXPANSION TIE ANCHORS, 3/4" | EACH | 410 | | 410 |
| Z10259 | JACKING AND CRIBBING | EACH | 78 | 40 | 38 |
| XZ1605 | DRAINAGE SCUPPERS SPECIAL | EACH | 149 | 84 | 65 |
| Z10526 | TRAFFIC CHANNELIZING POSTS | EACH | 76 | 43 | 33 |
| * L06387 | CONDUIT SYSTEM | L.SUM | 1 | 0.5 | 0.5 |
| * L06239 | MAINTENANCE AND REMOVAL OF LIGHTING SYSTEM COMPLETE | L.SUM | 1 | 0.5 | 0.5 |
| * L06425 | REINSTALL EXISTING LUMINAIRE AND LAMP | EACH | 30 | 15 | 15 |
| L06426 | VISUAL SCREEN | LIN.FT | 3240 | 1620 | 1620 |
| L06427 | VISUAL SCREEN, TEMPORARY | LIN.FT | 3240 | 1620 | 1620 |
| X05851 | MEDIAN REMOVAL (PARTIAL) | SQ.FT. | 439 | | 439 |

* SPECIALTY ITEMS

Rev. 1-31-84
Rev. 2-3-84

# SUMMARY OF QUANTITIES



| LOCATION | | | | | |
|---|---|---|---|---|---|
| CONSTRUCTION TYPE CODE | | | | X035-2A | X035-2A |
| CODE NO. | ITEM | UNIT | TOTAL QUANTITY | TAZEWELL COUNTY | PEORIA COUNTY |
| Z10316 | PCC PARKING CURB | EACH | 88 | | 88 |
| X06439 | PRISMATIC CURB REFLECTOR | EACH | 92 | | 92 |
| X05902 | RIVET REPLACEMENT | EACH | 100 | 50 | 50 |
| X06169 | BEARING REHABILITATION | EACH | 4 | 2 | 2 |
| X50707 | STRUCTURAL STEEL REMOVAL | LBS. | 1,021,560 | 510,780 | 510,780 |
| △ Z10527 | TRAINEES | HOUR | 4,000 | 2,000 | 2,000 |

△ CONST. TYPE CODE Y080

| LOCATION | | | |
|---|---|---|---|
| CONSTRUCTION TYPE CODE | | | |
| CODE NO. | ITEM | UNIT | TOTAL QUANTITY |

| ROUTE | | SECTION | COUNTY | SHEET TOTAL | SHEET NO |
|---|---|---|---|---|---|
| FAI | 74 | (72,90) 10D-1 | PEORIA TAZEWELL | 136 | 5 |
| MKD | | | | | |

PEORIA CO.

TAZEWELL CO.

SECTION 9
T8N-R8E-4PM.

SECTION 29
T 26 N - R4W-3PM.

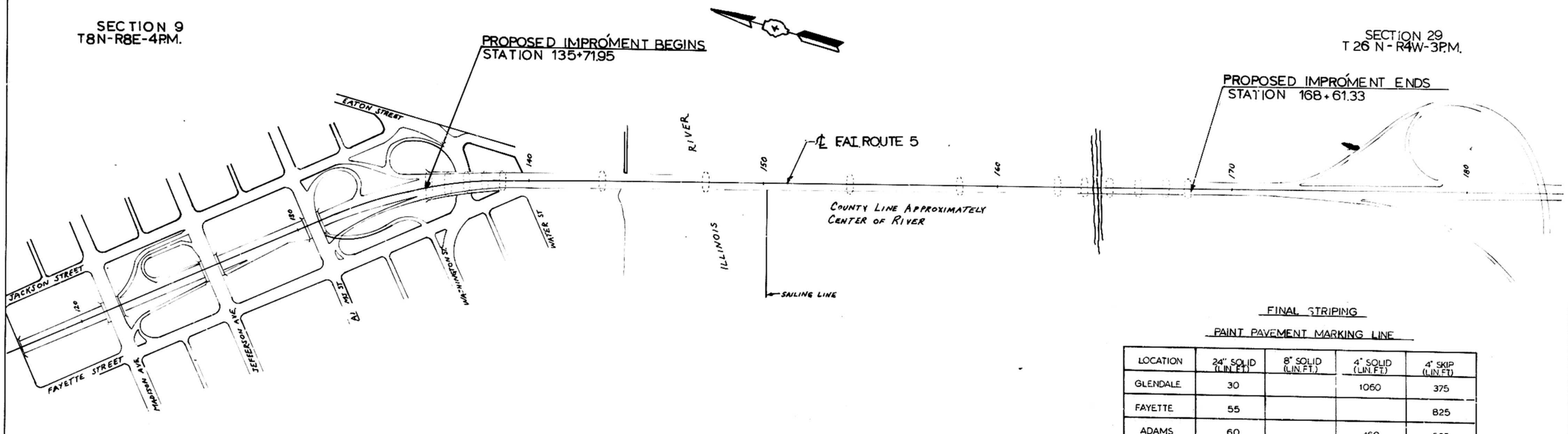


FINAL STRIPING

PAINT PAVEMENT MARKING LINE

| LOCATION | 24" SOLID (LIN.FT.) | 8" SOLID (LIN.FT.) | 4" SOLID (LIN.FT.) | 4" SKIP (LIN.FT.) |
|---|---|---|---|---|
| GLENDALE | 30 | | 1060 | 375 |
| FAYETTE | 55 | | | 825 |
| ADAMS | 60 | | 460 | 525 |
| JEFFERSON | 70 | 800 | 280 | 750 |
| FAI-74 | | 500 | 24600 | 3075 |
| GLENDALE RAMPS | | | 480 | |
| MADISON ON-RAMP | | | 200 | |
| TOTALS | 215 | 300 | 27080 | 5550 |

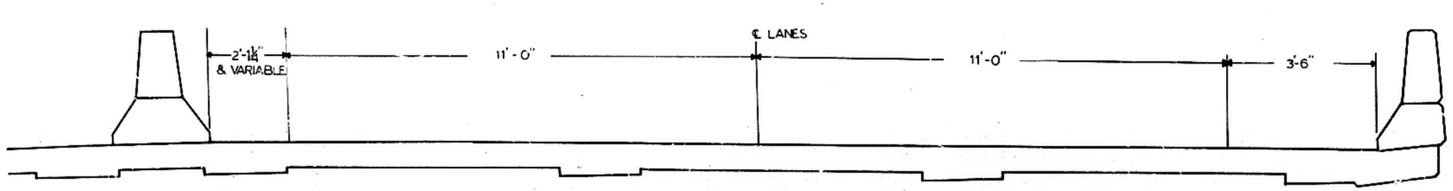


STRIPING ON STRUCTURE

| | | | | |
|---|---|---|---|---|
| FAI 74 | 72,90 106-1 | PEORIA TAXEWELL | 136 | 6 |

4" YELLOW TAPE
4" YELLOW PAINT
4" WHITE TAPE
4" WHITE PAINT

## GENERAL NOTES

1. WHEN NO WORK IS BEING PERFORMED, THE FLAGGER WILL NOT BE REQUIRED. IF THE FLAGGER IS NOT PRESENT, THE FLAGGER AND WORKER SIGNS SHALL BE REMOVED OR COVERED.
2. CONES MAY BE SUBSTITUTED FOR BARRICADES OR DRUMS AT HALF THE SPACING DURING DAY OPERATIONS. ON FULLY ACCESS-CONTROLLED FACILITIES, CONES SHALL BE A MINIMUM OF 28 IN. IN HEIGHT.
3. STEADY BURNING LIGHTS WILL NOT BE REQUIRED ON BARRICADES FOR DAY OPERATIONS.
4. ALL SIGNS SHALL BE POST MOUNTED IF THE CLOSURE TIME EXCEEDS FOUR DAYS.
5. HIGH INTENSITY FLASHING LIGHTS SHALL BE USED ON EACH APPROACH IN ADVANCE OF THE WORK AREA DURING HOURS OF DARKNESS AND INSTALLED ABOVE THE FIRST TWO SETS OF SIGNS IN EACH SERIES.
6. LONGITUDIANL DIMENSIONS MAY BE ADJUSTED TO FIT FIELD CONDITIONS. THE LATERAL PLACEMENT OF THE FLAGGER MAY BE VARIED FROM THAT SHOWN. THE FLAGGER SHOWN AT THE BEGINNING OF THE WORK AREA SHALL BE STATIONED APPROXIMATELY 200 FEET IN ADVANCE OF THE WORK PARTY. ADDITIONAL FLAGGERS MAY BE REQUIRED. SEE ARTICLE 107.14 OF THE STANDARD SPECIFICATIONS.
7. ALL VEHICLES, EQUIPMENT, WORKERS AND THEIR ACTIVITIES ARE RESTRICTED AT ALL TIMES TO ONE SIDE OF THE PAVEMENT UNLESS OTHERWISE AUTHORIZED BY THE ENGINEER.
8. ALL BARRICADE LIGHTS SHALL BE MONODIRECTIONAL.
9. ALL EXISTING PAVEMENT MARKINGS WHICH CONFLICT WITH THE REVISED TRAFFIC PATERN SHALL BE REMOVED AS DIRECTED BY THE ENGINEER. COST OF THIS WORK INCLUDED IN THE BID ITEM OF TRAFFIC CONTROL AND PROTECTION, SPECIAL.
10. FORM BT726 IS REQUIRED.
11. TYPE III PAVEMENT MARKING TAPE SHALL BE USED.

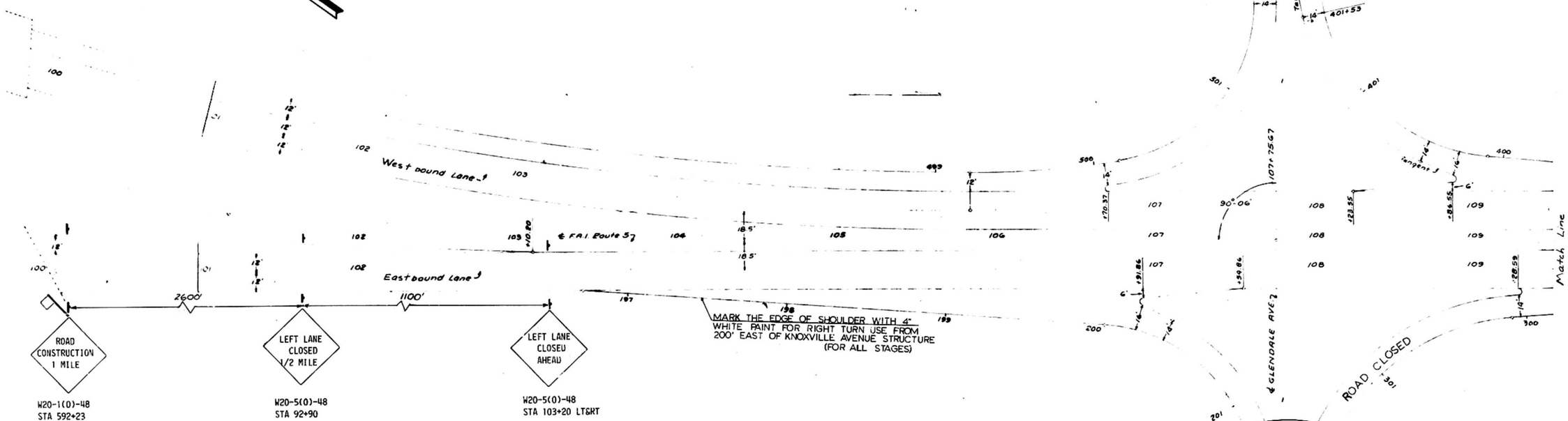


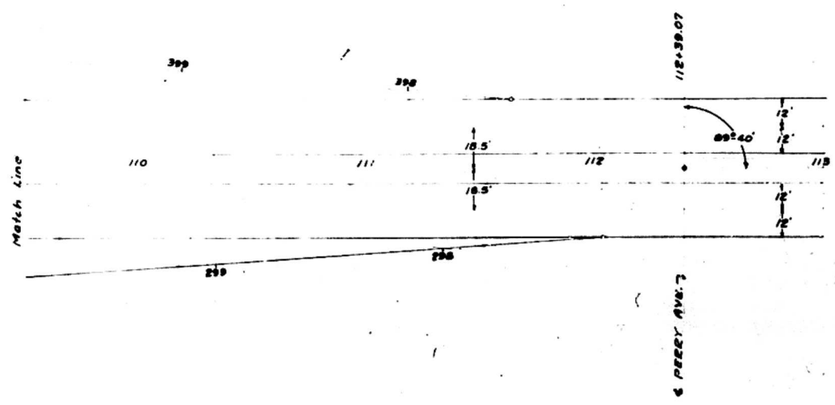


## SYMBOLS FOR TRAFFIC CONTROL PLAN

- WORK AREA
- TY III ARROW BOARD
- SIGN ON PERMANENT OR PORTABLE SUPPORT.
- FLAGGER WITH TRAFFIC CONTROL SIGN
- BARRICADE OR DRUM
- BARRICADE OR DRUM WITH STEADY BURNING LIGHT
- 18" X 18" (MINIMUM) ORANGE FLAG
- RAISED REFLECTORIZED PAVEMENT MARKER

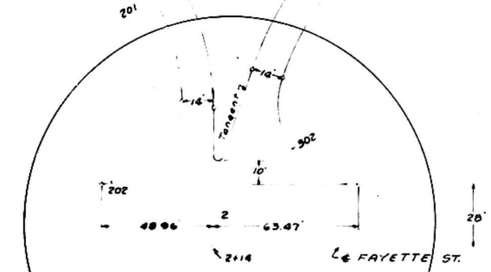


FOR TRAFFIC CONTROL AND PROTECTION TREATMENT, SEE SHEET NO. 22

STAGE I & IV
INSIDE LANES CLOSED
FAI 74
SECTION (72, 90) 10D-1
PEORIA COUNTY
SCALE: 1" = 30'

Drawn - H.N. Levy 6-1-87
Checked - WES 6/15/87

| ROUTE | | SECTION | COUNTY | SHEET TOTAL | SHEET NO |
|---|---|---|---|---|---|
| FAI | 74 | (72, 90) 10D-1 | PEORIA TAZEWELL | 136 | 7 |
| MKD | 74 | | | | |
| PROJ | | STA. | | | |

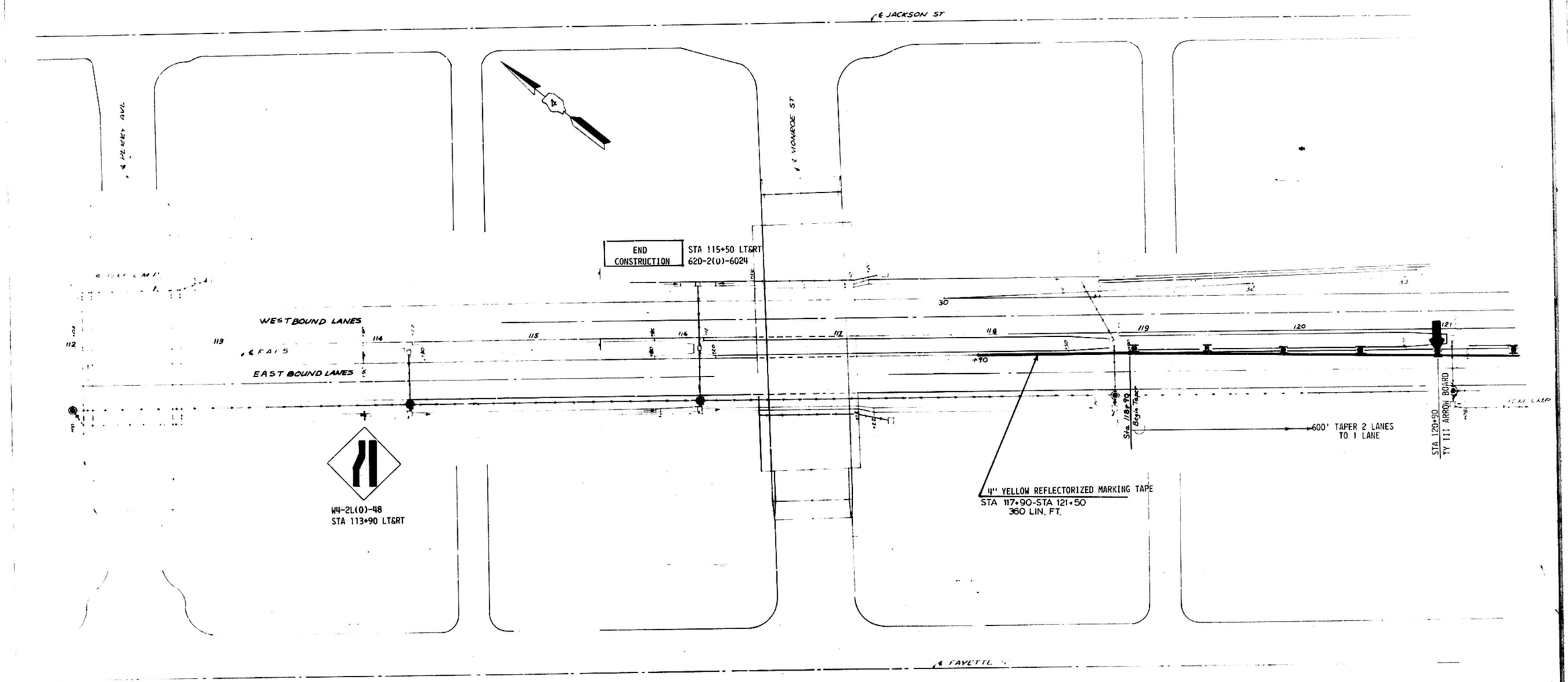


STAGE I & IV
INSIDE LANES CLOSED
FAI 74
SECTION (72, 90) 10D-1
PEORIA COUNTY
SCALE: 1" = 30'

| ROUTE | | SECTION | COUNTY | SHEET TOTAL | SHEET NO. |
|---|---|---|---|---|---|
| FAI | 74 | (72, 90) 10D-1 | PEORIA TAZEWELL | 136 | 8 |
| MKD. | 74 | | | | |
| PROJ. | | | | | |

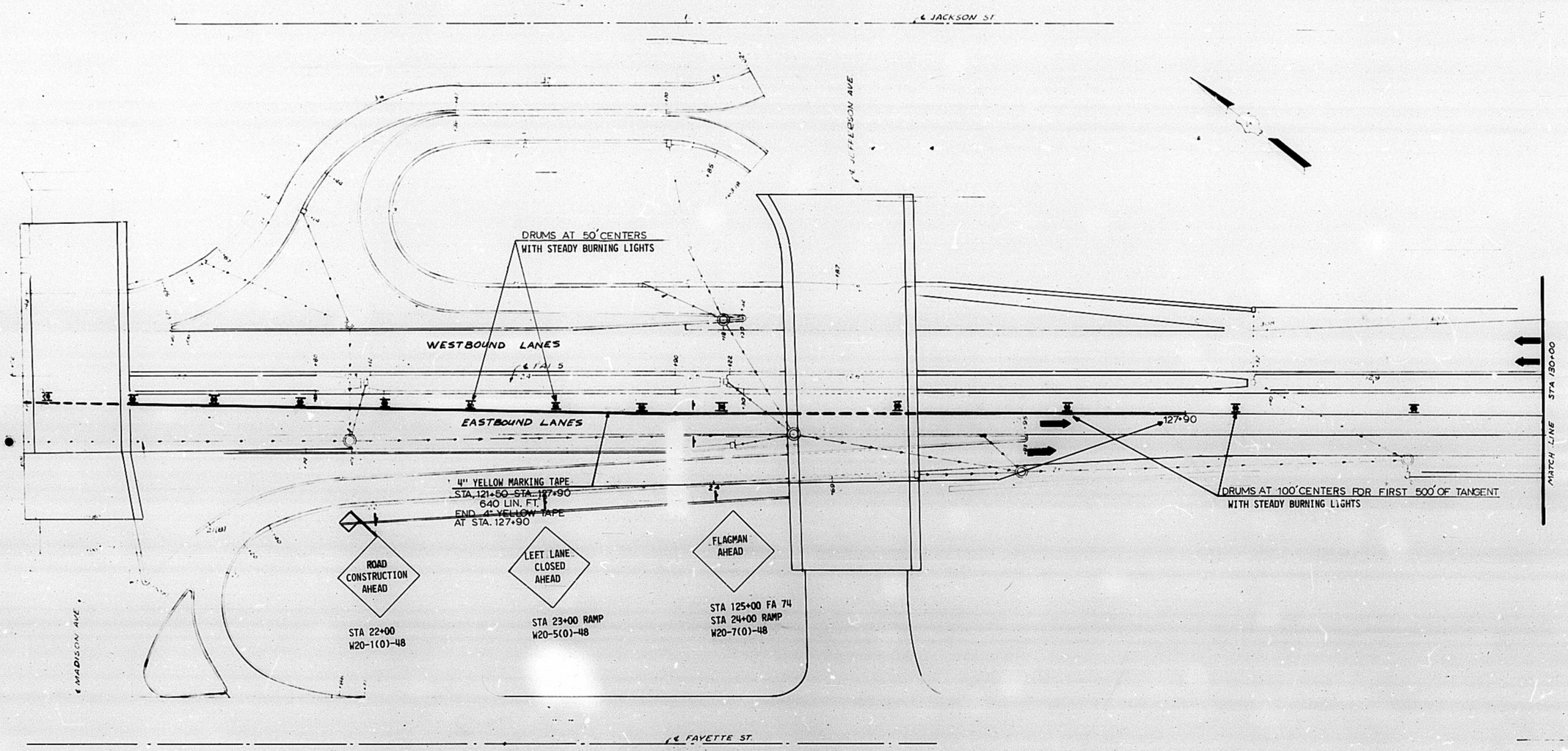


STAGE I & IV
INSIDE LANES CLOSED
FAI 74
SECTION (72, 90) 10D-1
PEORIA COUNTY
SCALE: 1" = 30'

| ROUTE | | SECTION | COUNTY | | |
|---|---|---|---|---|---|
| FAI | 74 | (72, 90) 10D-1 | PEORIA TAZEWELL | 136 | 9 |
| SECT. | 74 | | | TOTAL | |
| PROJ. | | STA. 129+75 | TO STA. 138+85 | | |

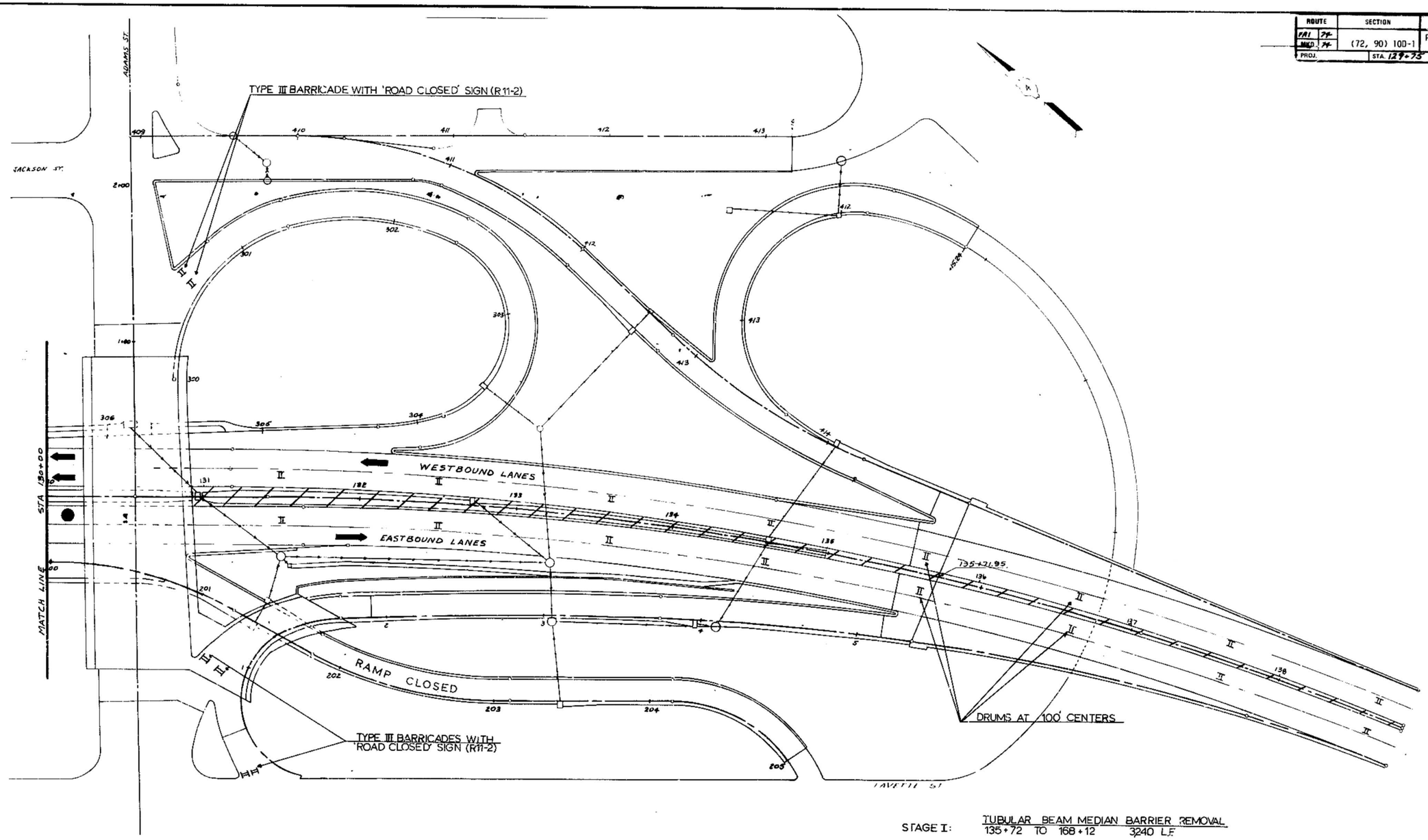


STAGE I: TUBULAR BEAM MEDIAN BARRIER REMOVAL
135+72 TO 168+12 3240 L.F.

ADAMS STREET TRAFFIC CONTROL & PROTECTION TREATMENT SEE SHEET NO. 21

STAGE I & IV
INSIDE LANES CLOSED
FAI 74
SECTION(72, 90) 10D-1
PEORIA COUNTY
SCALE: 1" = 30'

| FEDERAL AID ROUTE NO. | SEC. | COUNTY | TOTAL SHEETS | SHEET NO. |
|---|---|---|---|---|
| FAI 74 | (72,90) 100-1 | PEORIA, TAZEWELL | 136 | 10 |
| F.C. ROAD DIV. NO. 4 | ILLINOIS | PROJECT | | |

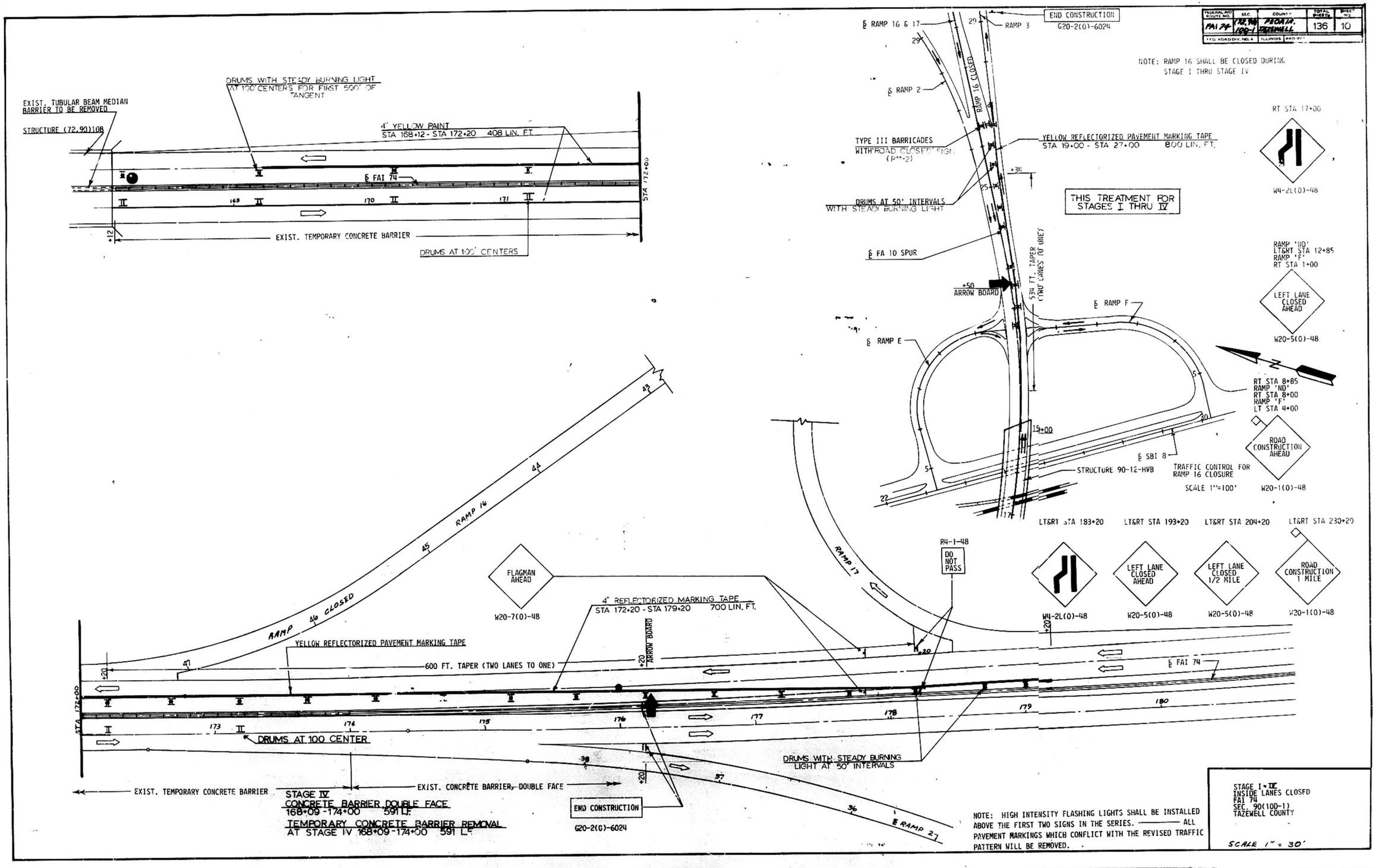

| ROUTE | SEC | COUNTY | TOTAL | SHEET |
|---|---|---|---|---|
| FAI 74 | 72,90 100-1 | PEORIA TAZEWELL | 136 | 11 |

## GENERAL NOTES STAGES II & III

1 ALL EXISTING PAVEMENT MARKINGS WHICH CONFLICT WITH THE REVISED TRAFFIC PATTERN SHALL BE REMOVED AS DIRECTED BY THE ENGINEER.

2 ALL BARRICADES AND/OR DRUMS SHALL BE AT 50 FT. CENTERS. INSTEAD OF VERTICAL PANELS, PRISMATIC BARRIER REFLECTORS AT 40FT. CENTERS SHALL BE USED ON THE SIDE OF TEMPORARY CONCRETE BARRIER.

3 A CURVE SIGN WILL BE REQUIRED AT THE EXIT END OF THE RUN AROUNDS.

4 TYPE III PAVEMENT MARKING TAPE SHALL BE USED.

5 ALL SIGNS SHALL BE POST MOUNTED.

6 HIGH INTENSITY FLASHING LIGHTS SHALL BE USED ON EACH APPROACH IN ADVANCE OF THE WORK AREA DURING HOURS OF DARKNESS AND INSTALLED ABOVE THE FIRST TWO SIGNS IN EACH SERIES.

7 LONGITUDINAL DIMENSIONS MAY BE ADJUSTED SLIGHTLY TO FIT FIELD CONDITIONS.

8 ALL BARRICADE LIGHTS SHALL BE MONODIRECTIONAL.

9 FORM BT 725 IS REQUIRED.

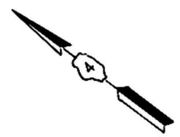




STA. EQ. 615+70.34(BK) = 90+37.09(AH)

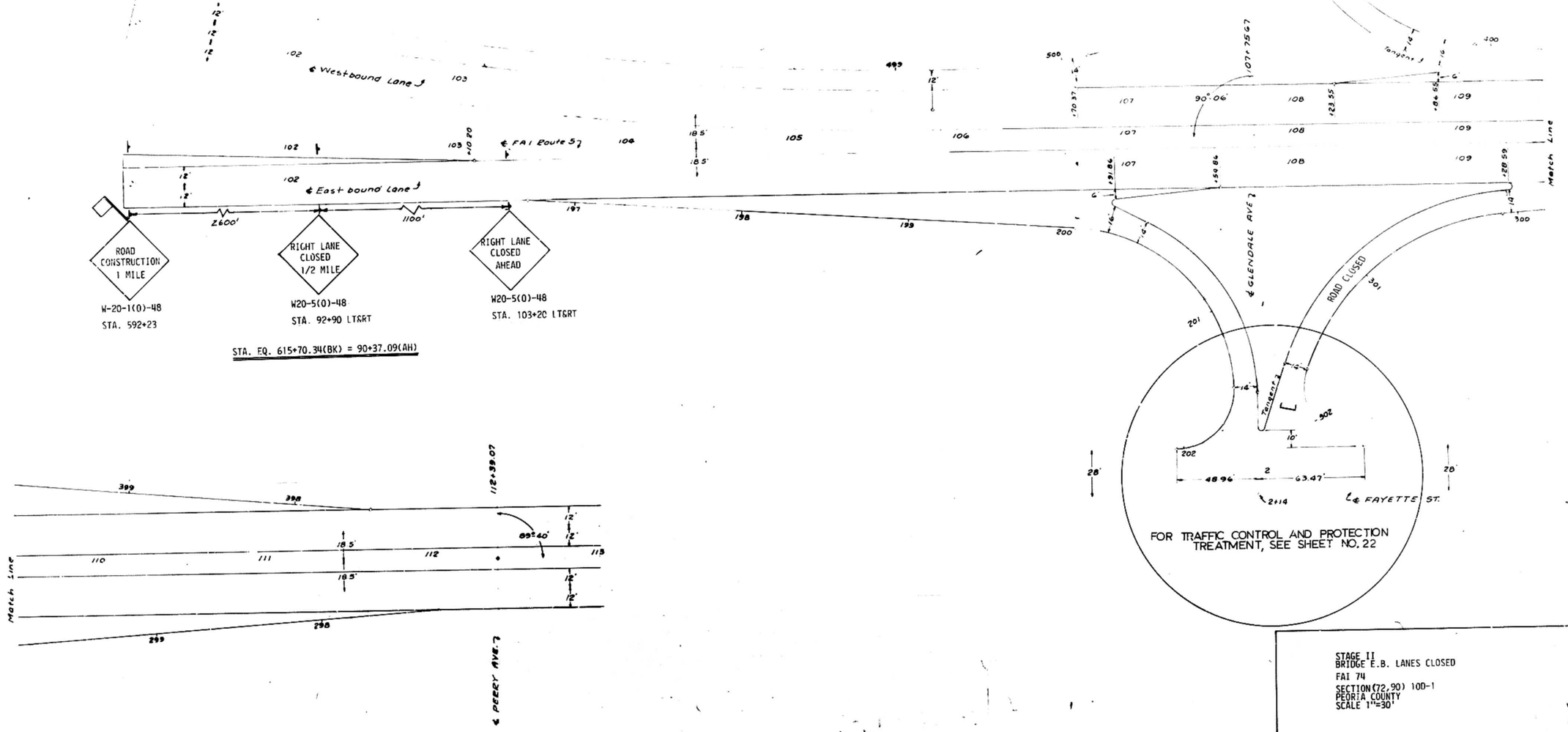


STAGE II
BRIDGE E.B. LANES CLOSED

FAI 74

SECTION (72,90) 100-1
PEORIA COUNTY
SCALE 1"=30'

| ROUTE | | SECTION | COUNTY | SHEET TOTAL | SHEET NO. |
|---|---|---|---|---|---|
| FAI | 74 | (72,90) 10D-1 | PEORIA TAZEWELL | 136 | 12 |

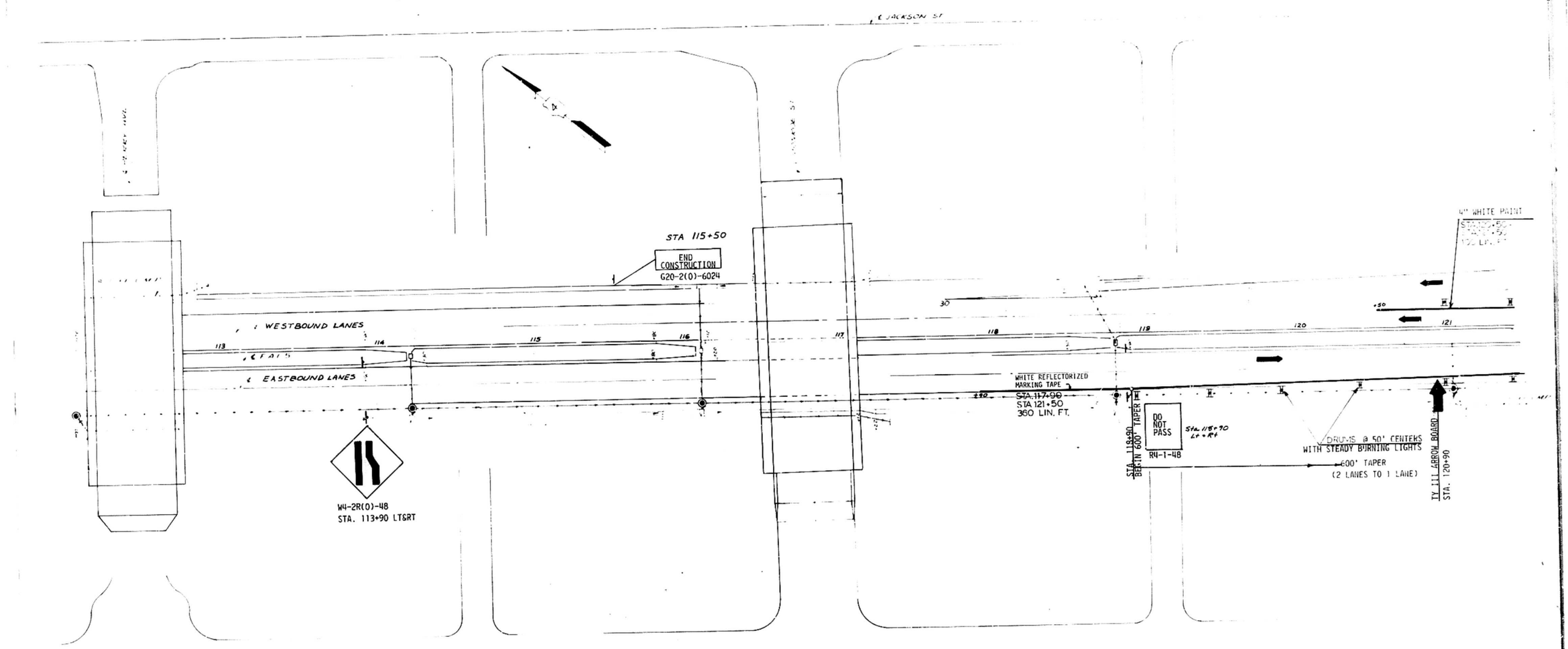


STAGE II
BRIDGE E.B. LANES CLOSED

FAI 74
SECTION(72, 90) 10D-1
PEORIA COUNTY
SCALE 1"=30'

| ROUTE | | SECTION | COUNTY | SHEET TOTAL | SHEET NO. |
|---|---|---|---|---|---|
| FAI | 74 | (72, 90) 100-1 | PEORIA TAZEWELL | 136 | 13 |

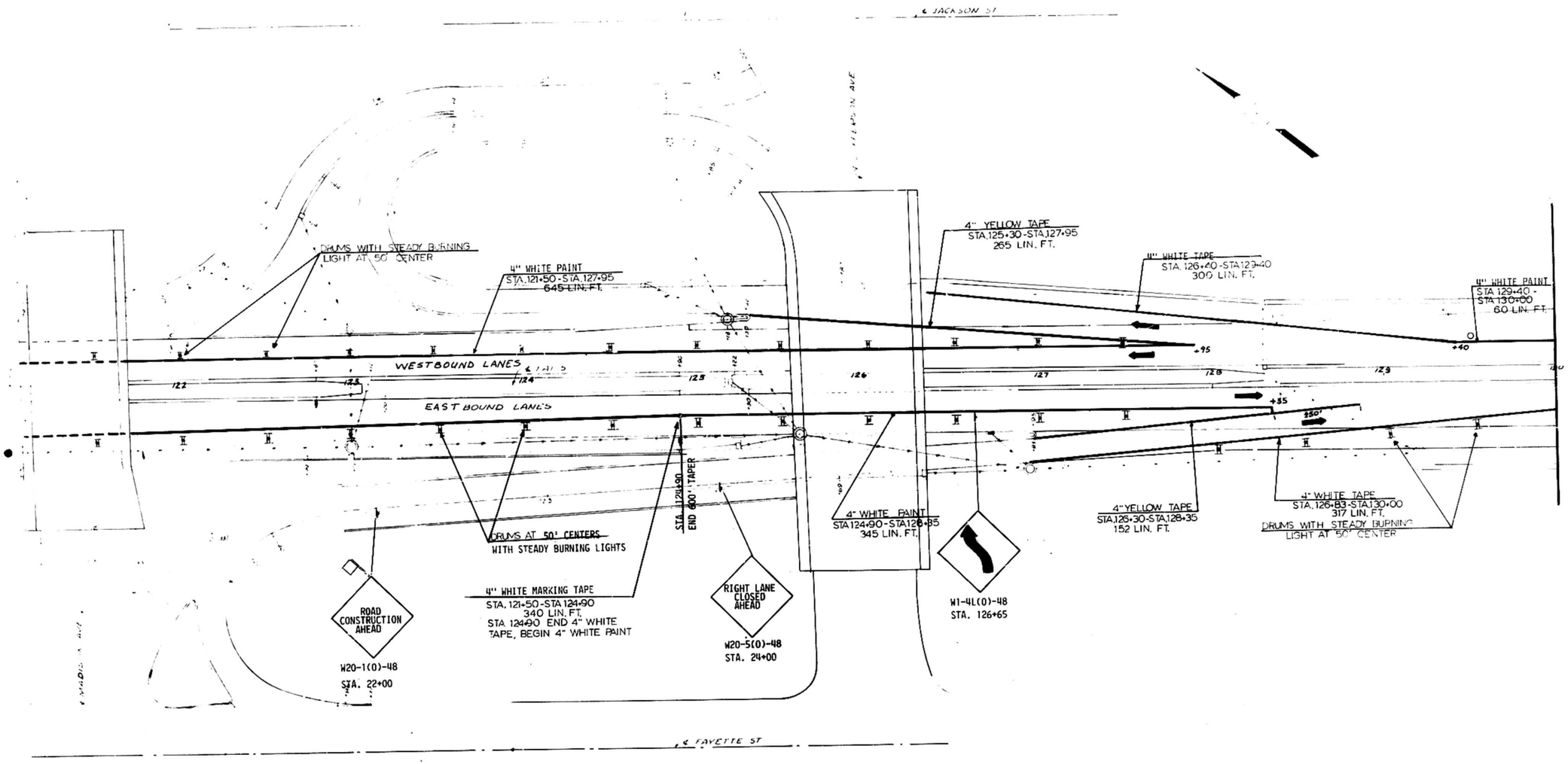


FOR JEFFERSON STREET TRAFFIC CONTROL AND PROTECTION, SEE SHEET NO. 21

STAGE II
BRIDGE E.B. LANES CLOSED

FAI 74

SECTION(72, 90) 100-2
PEORIA COUNTY
SCALE 1"=30'

| ROUTE | SECTION | COUNTY | TOTAL SHEETS | SHEET |
|---|---|---|---|---|
| FAI 74 | (72, 90) 100-1 | PEORIA | 136 | 14 |
| MAIN 74 | | TAZEWELL | | |
| END | STA 129+75 | TO STA 138+85 | | |

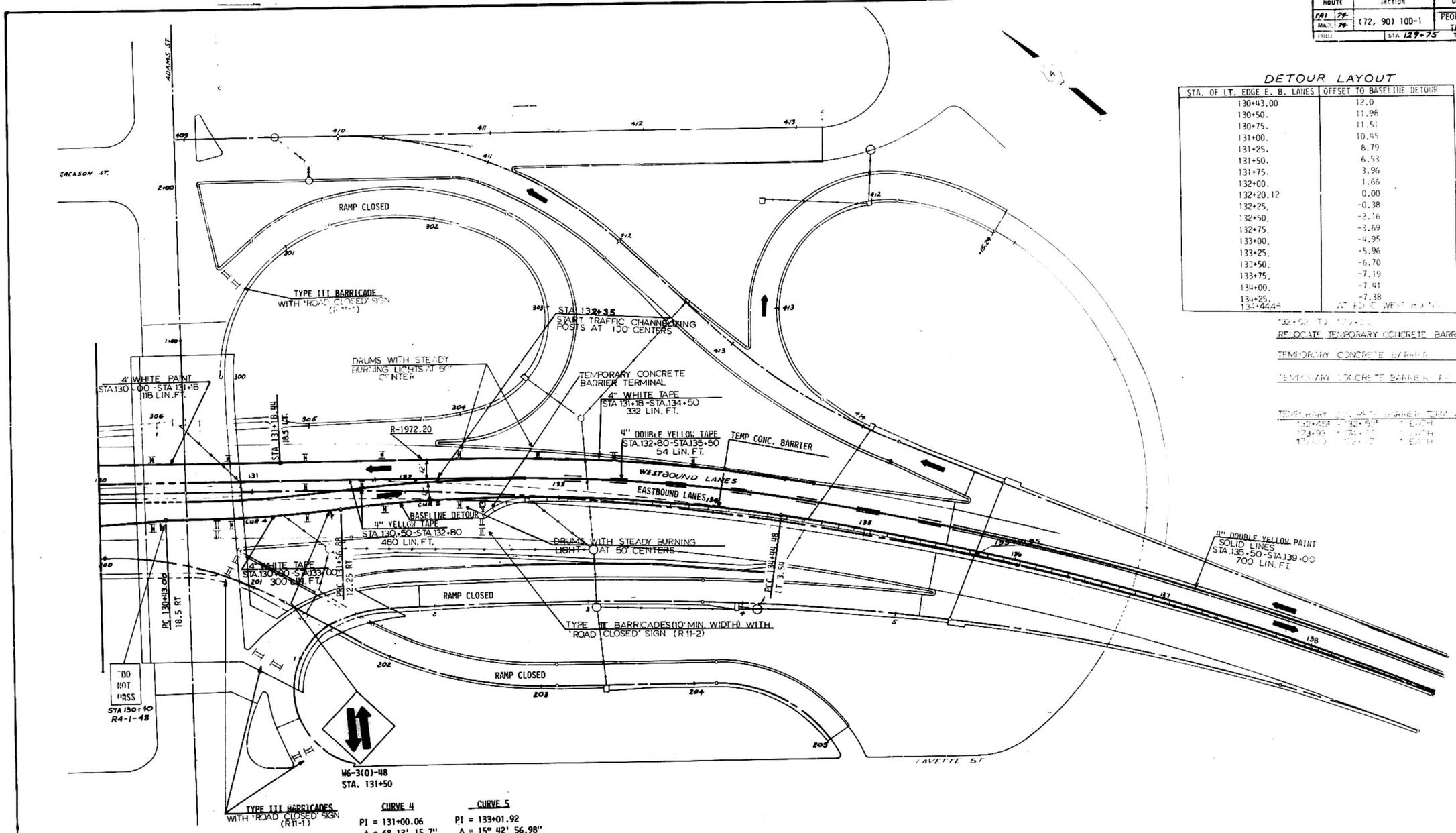


## DETOUR LAYOUT

| STA. OF LT. EDGE E. B. LANES | OFFSET TO BASELINE DETOUR |
|---|---|
| 130+43.00 | 12.0 |
| 130+50. | 11.98 |
| 130+75. | 11.51 |
| 131+00. | 10.45 |
| 131+25. | 8.79 |
| 131+50. | 6.53 |
| 131+75. | 3.96 |
| 132+00. | 1.66 |
| 132+20.12 | 0.00 |
| 132+25. | -0.38 |
| 132+50. | -2.16 |
| 132+75. | -3.69 |
| 133+00. | -4.95 |
| 133+25. | -5.96 |
| 133+50. | -6.70 |
| 133+75. | -7.19 |
| 134+00. | -7.41 |
| 134+25. | -7.38 |
| 134+44.48 | AT EDGE WEST LANE |

| | |
|---|---|
| 132+50 TO 133+00 | |
| RELOCATE TEMPORARY CONCRETE BARRIER | [illegible] L.F. |
| TEMPORARY CONCRETE BARRIER | 550 L.F. |
| TEMPORARY CONCRETE BARRIER, [illegible] | 670 L.F. |

| TEMPORARY [illegible] BARRIER TERMINAL [illegible] | |
|---|---|
| 132+45 | 132+55 1 EACH |
| 133+00 | 133+00 1 EACH |
| 17[illegible] | 17[illegible] 1 EACH |

FOR ADAMS STREET TRAFFIC CONTROL AND PROTECTION SEE SHEET NO.

**CURVE 4**

PI = 131+00.06
Δ = 6° 13' 15.7"
D = 5° 27' 24.27"
T = 57.06
R = 1050.00
L = 114.01
E = 1.55
PC = 130+43.00
PRC = 131+56.88

**CURVE 5**

PI = 133+01.92
Δ = 15° 42' 56.98"
D = 5° 27' 24.27"
T = 144.91
R = 1050.00
L = 288.01
E = 9.95
PRC = 131+56.88
PCC = 134+44.48

STAGE II
BRIDGE E.B. LANES CLOSED
FAI 74
SECTION (72, 90) 100-1
PEORIA COUNTY
SCALE 1"=30'

Rev 1-31-84

| FEDERAL AID ROUTE NO. | SEC | COUNTY | TOTAL SHEETS | SHEET NO. |
|---|---|---|---|---|
| FAI 74 | (72,90) 10D-1 | PEORIA. TAZEWELL | 136 | 15 |
| FED. ROAD DIV. NO. 4 | | ILLINOIS | PROJECT | |

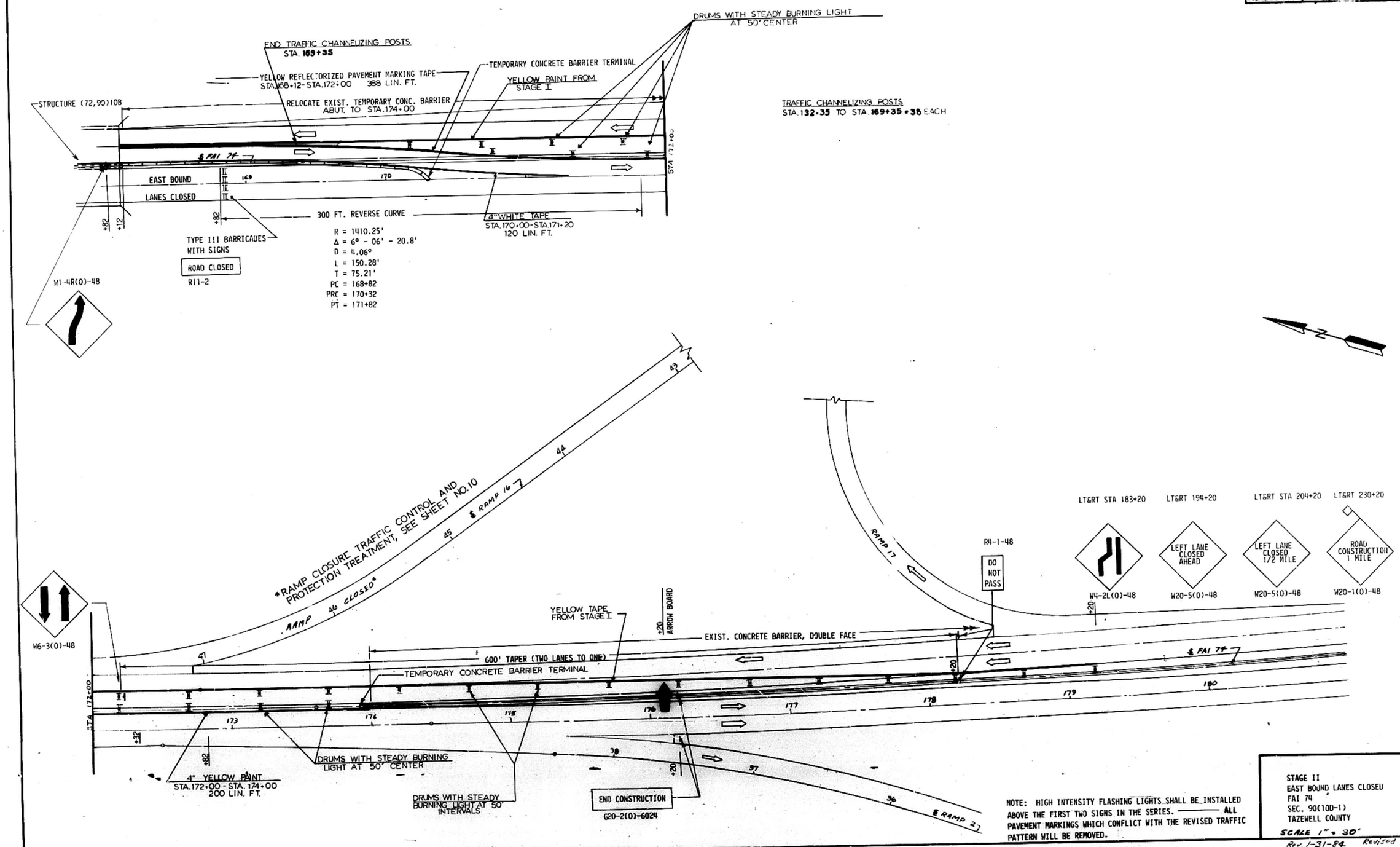

| FEDERAL AID ROUTE NO. | SEC. | COUNTY | TOTAL SHEETS | SHEET NO. |
|---|---|---|---|---|
| FAI 74 | (7290) 100-1 | PEORIA TAZEWELL | 136 | 15A* |
| FED. ROAD DIV. NO. 4 | ILLINOIS | PROJECT | | |

# WINTER MONTH RESUME 4-LANE TRAFFIC

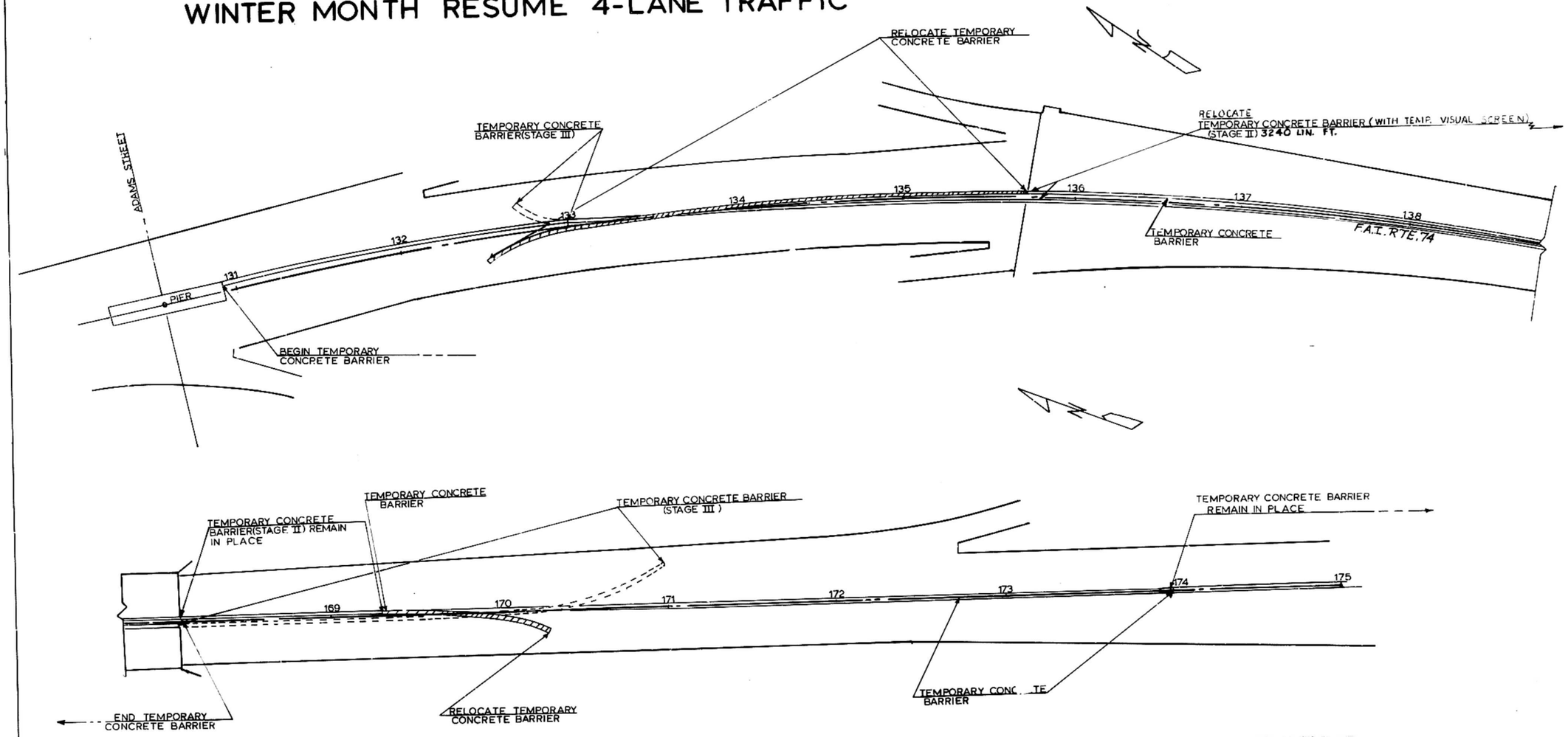


TEMPORARY CONCRETE BARRIER 3690 LIN.FT.
RELOCATE TEMPORARY CONCRETE BARRIER 417* LIN.FT.
PAINT PAVEMENT MARKING 4"
FAI 74 LT&RT ℄ 116+00 TO 180+00 4800 LIN.FT.

* 3 END SECTIONS TO BE STORED ON RIGHT-OF-WAY AS DIRECTED BY THE ENGINEER.

Rev. 2-3-84

| FAI 74 | 72-90 (100-1) | PEORIA TAZEWELL | 136 | 16 |
|---|---|---|---|---|

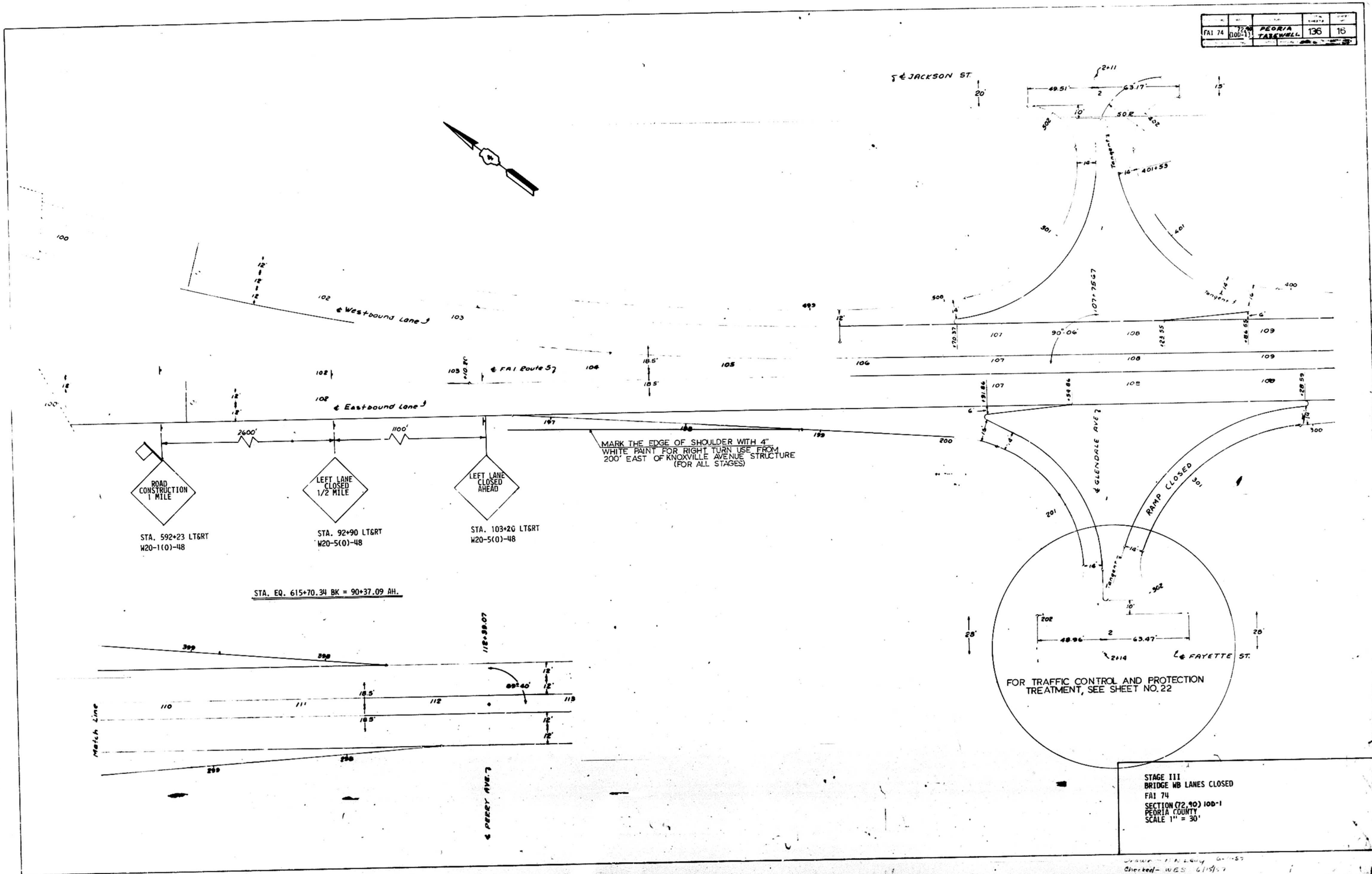


STAGE III
BRIDGE WB LANES CLOSED
FAI 74
SECTION (72-90) 100-1
PEORIA COUNTY
SCALE 1" = 30'

Drawn - F.N.Lewy 6-1-57
Checked - W.E.S. 6/15/57

| ROUTE | | SECTION | COUNTY | SHEETS TOTAL | SHEETS NO |
|---|---|---|---|---|---|
| FAI | 74 | (72,90) 10D-1 | PEORIA TAZEWELL | 136 | 17 |

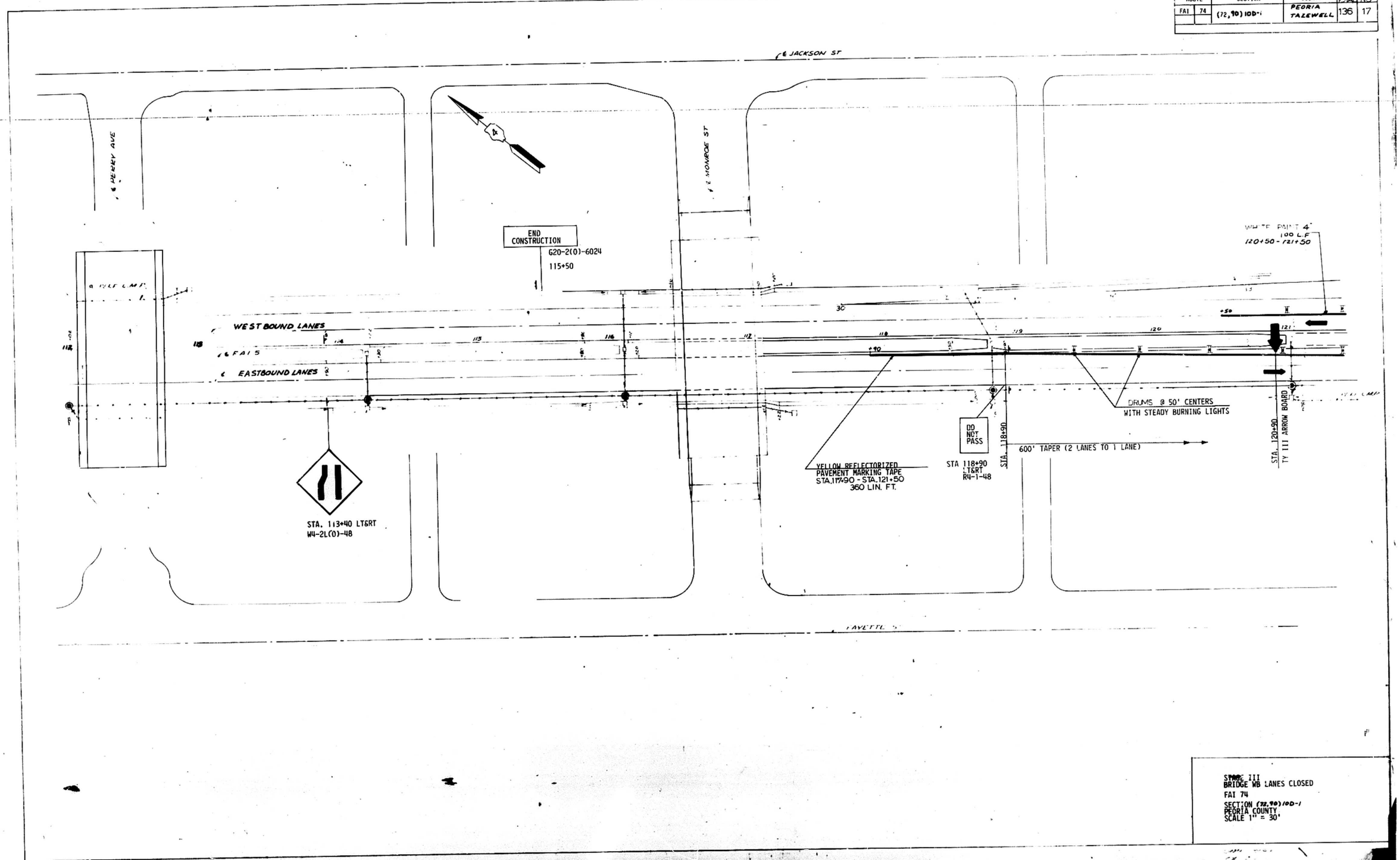


STAGE III
BRIDGE WB LANES CLOSED

FAI 74

SECTION (72,90)10D-1
PEORIA COUNTY
SCALE 1" = 30'

| ROUTE | | SECTION | COUNTY | SHEET TOTAL | SHEET NO |
|---|---|---|---|---|---|
| FAI | 74 | (72,90)100-1 | PEORIA TAZEWELL | 136 | 18 |

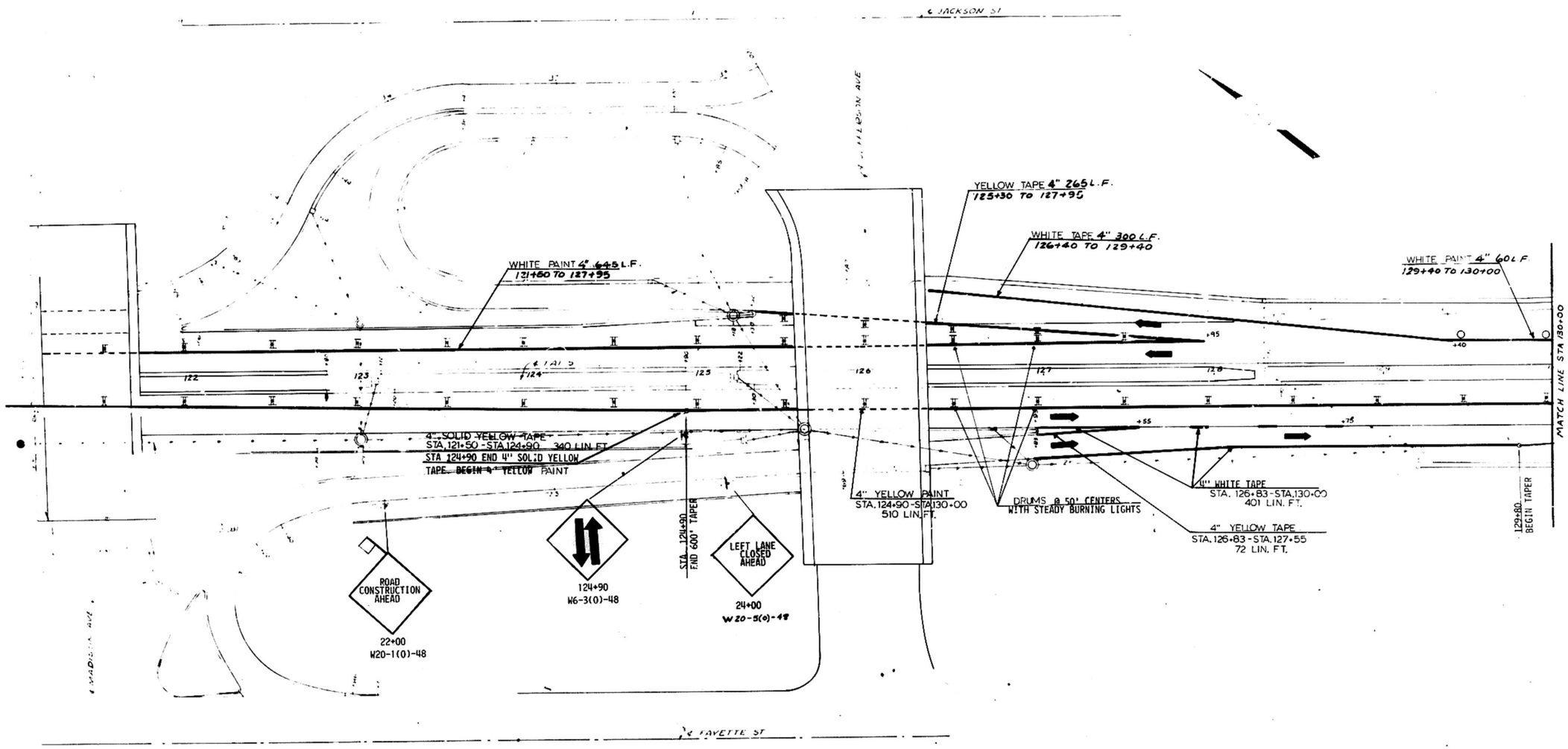


FOR JEFFERSON STREET TRAFFIC CONTROL AND PROTECTION TREATMENT, SEE SHEET NO. 21

STAGE III
BRIDGE WB LANES CLOSED
FAI 74
SECTION (72,90) 100-1
PEORIA COUNTY
SCALE 1" = 30'

| ROUTE | | SECTION | COUNTY | SHEET TOTAL | SHEET NO. |
|---|---|---|---|---|---|
| FAI | 74 | (72,90) 10D-1 | PEORIA TAZEWELL | 136 | 19 |
| MKD. | 74 | | | | |
| PROJ | | STA 129+75 | TO STA. 138+85 | | |

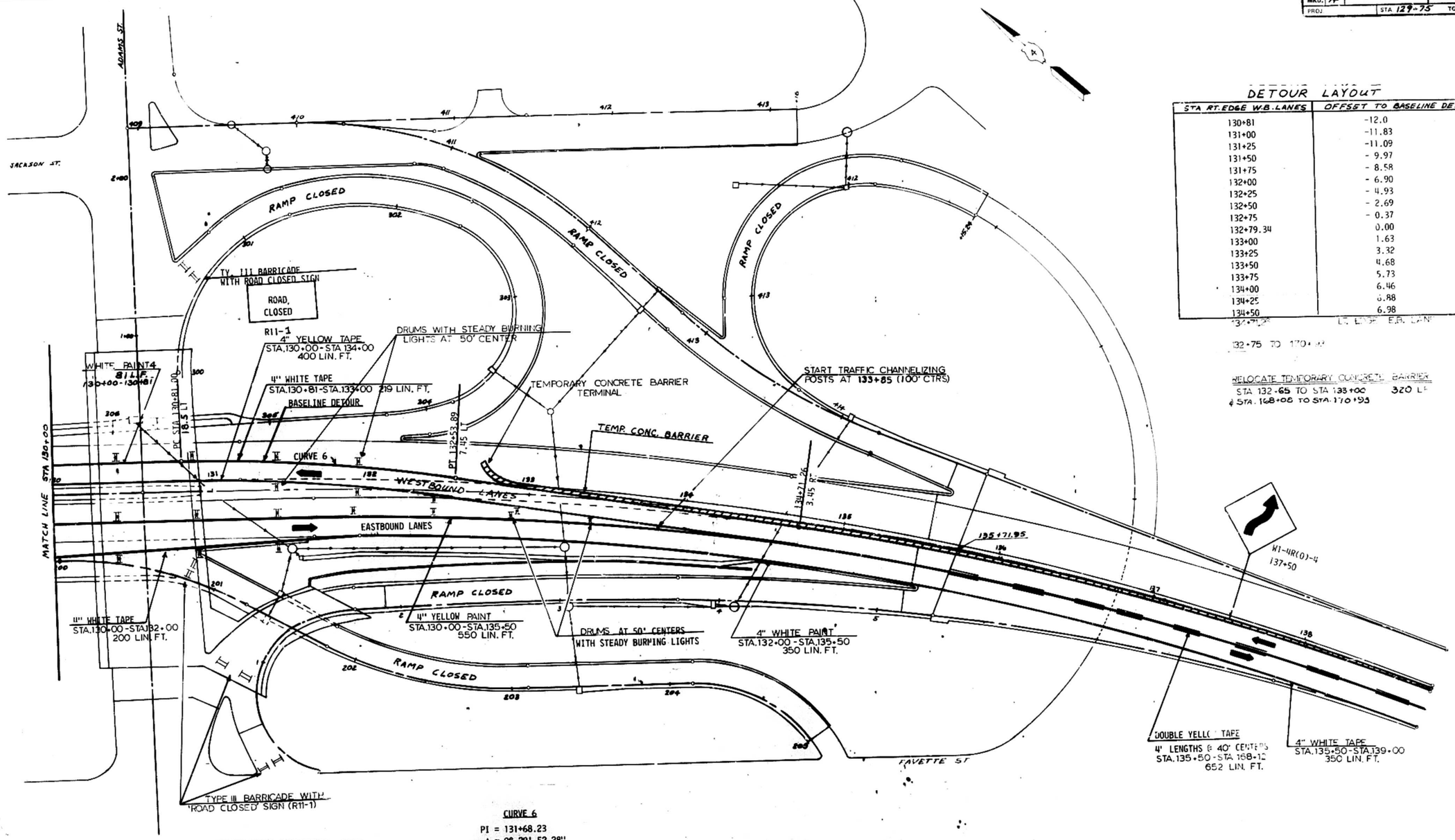


FOR ADAMS STREET TRAFFIC CONTROL AND PROTECTION, SEE SHEET NO.21

**CURVE 6**

PI = 131+68.23
Δ = 9° 29' 52.28"
D = 5° 27' 24.27"
T = 87.23
R = 1050.00
L = 174.06
E = 3.62
PC = 130+81.00
PT = 132+53.89

## DETOUR LAYOUT

| STA. RT. EDGE W.B. LANES | OFFSET TO BASELINE DETOUR |
|---|---|
| 130+81 | -12.0 |
| 131+00 | -11.83 |
| 131+25 | -11.09 |
| 131+50 | - 9.97 |
| 131+75 | - 8.58 |
| 132+00 | - 6.90 |
| 132+25 | - 4.93 |
| 132+50 | - 2.69 |
| 132+75 | - 0.37 |
| 132+79.34 | 0.00 |
| 133+00 | 1.63 |
| 133+25 | 3.32 |
| 133+50 | 4.68 |
| 133+75 | 5.73 |
| 134+00 | 6.46 |
| 134+25 | 6.88 |
| 134+50 | 6.98 |
| 134+75 | LT. EDGE E.B. LANE |

132+75 TO 170+[illegible]

RELOCATE TEMPORARY CONCRETE BARRIER
STA 132+65 TO STA 133+00 320 LF
& STA. 168+05 TO STA. 170+95

STAGE III
BRIDGE WB LANES CLOSED
FAI 74
SECTION (72,90) 10D-1
PEORIA COUNTY
SCALE 1" = 30'

Rev. 1-31-84

| PROJECT/RTE ROUTE NO. | SEC. | COUNTY | TOTAL SHEETS | SHEET NO. |
|---|---|---|---|---|
| FAI 74 | (97,90) 100-1 | PEORIA, TAZEWELL | 136 | 20 |
| FED. ROAD DIV. NO. 4 | ILLINOIS | PROJECT | | |

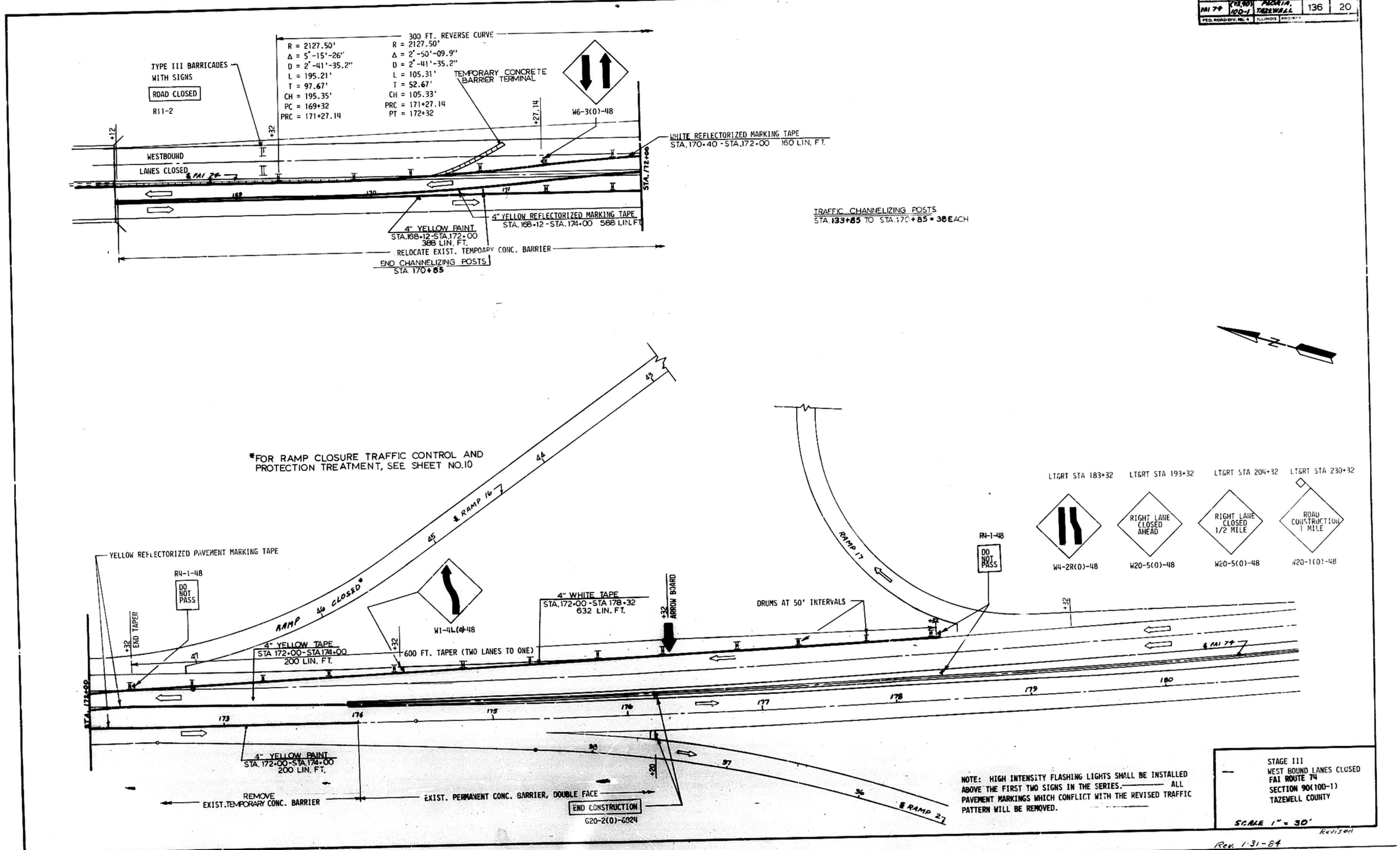

| ROUTE | | SECTION | COUNTY | SHEET TOTAL | SHEET NO |
|---|---|---|---|---|---|
| FAI | 74 | (72, 90) 10D-1 | PEORIA TAZEWELL | 136 | 21 |

## ADAMS STREET OVERPASS

ALL STAGES

NOTE: JACKSON STREET - NO PARKING BETWEEN ADAMS STREET AND GLENDALE AVENUE. (ALL STAGES)

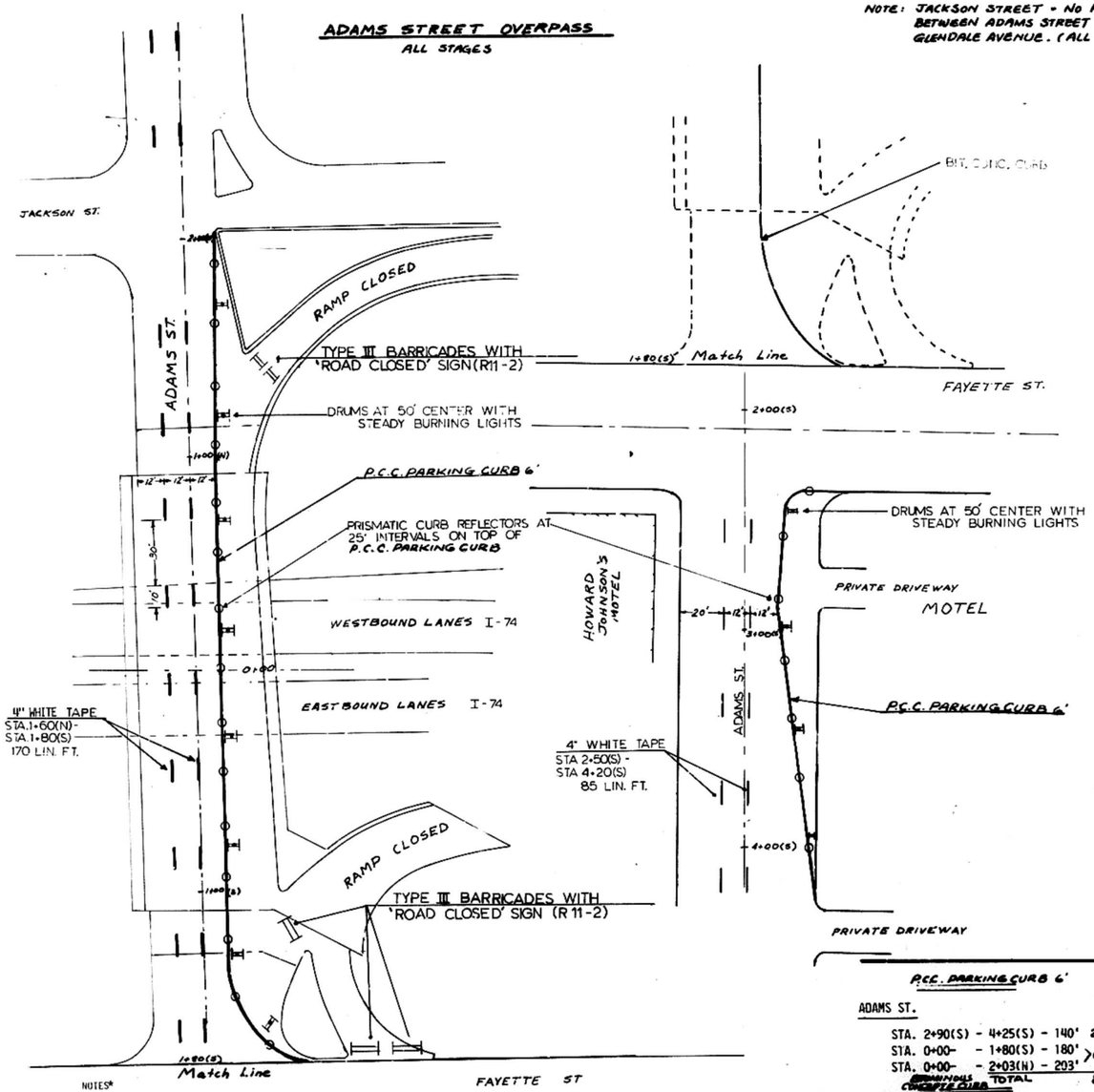


NOTES*

1. DIST. STD. U-3 SHALL BE USED FOR TRAFFIC CONTROL & PROTECTION FOR BIT. CURB CONSTRUCTION & OTHER WORK ON ADAMS ST. & JEFFERSON ST.

2. TRAFFIC CONTROL FOR JEFF. ST. NORTH OF JACKSON ST. SHOWN UNDER STAGE II, SHALL BE SAME FOR STAGE III. EXISTING TRAFFIC FLOW BETWEEN FAYETTE ST & HAMILTON ST. SHALL REMAIN THE SAME UNDER STAGE II.

| | P.C.C. PARKING CURB 6' | PRISMATIC CURB REFLECTOR |
|---|---|---|
| **ADAMS ST.** | | |
| STA. 2+90(S) - 4+25(S) - 140' | 24 Ea | 7 Ea |
| STA. 0+00 - 1+80(S) - 180' | 64 Ea | 17 Ea |
| STA. 0+00 - 2+03(N) - 203' | | |
| TOTAL | 88 EACH | |
| **JEFFERSON ST.** | | |
| STA. 0+00 - 1+75(N) - 175' | | |
| AROUND RADIUS = 30' | 22 Ea | |
| STA. 0+55(W) - 1+00(N) LT = 45' | | |
| STA. 2+48(N) - 3+48(N) = 100' | | |
| STA. 0+00 - 1+75(S) = 175 | | |
| TOTAL | 525 LIN. FT. | TOTAL 88 EACH |

## JEFFERSON STREET OVERPASS

STAGE II (EASTBOUND LANES CLOSED)

STAGE III (WESTBOUND LANES CLOSED)

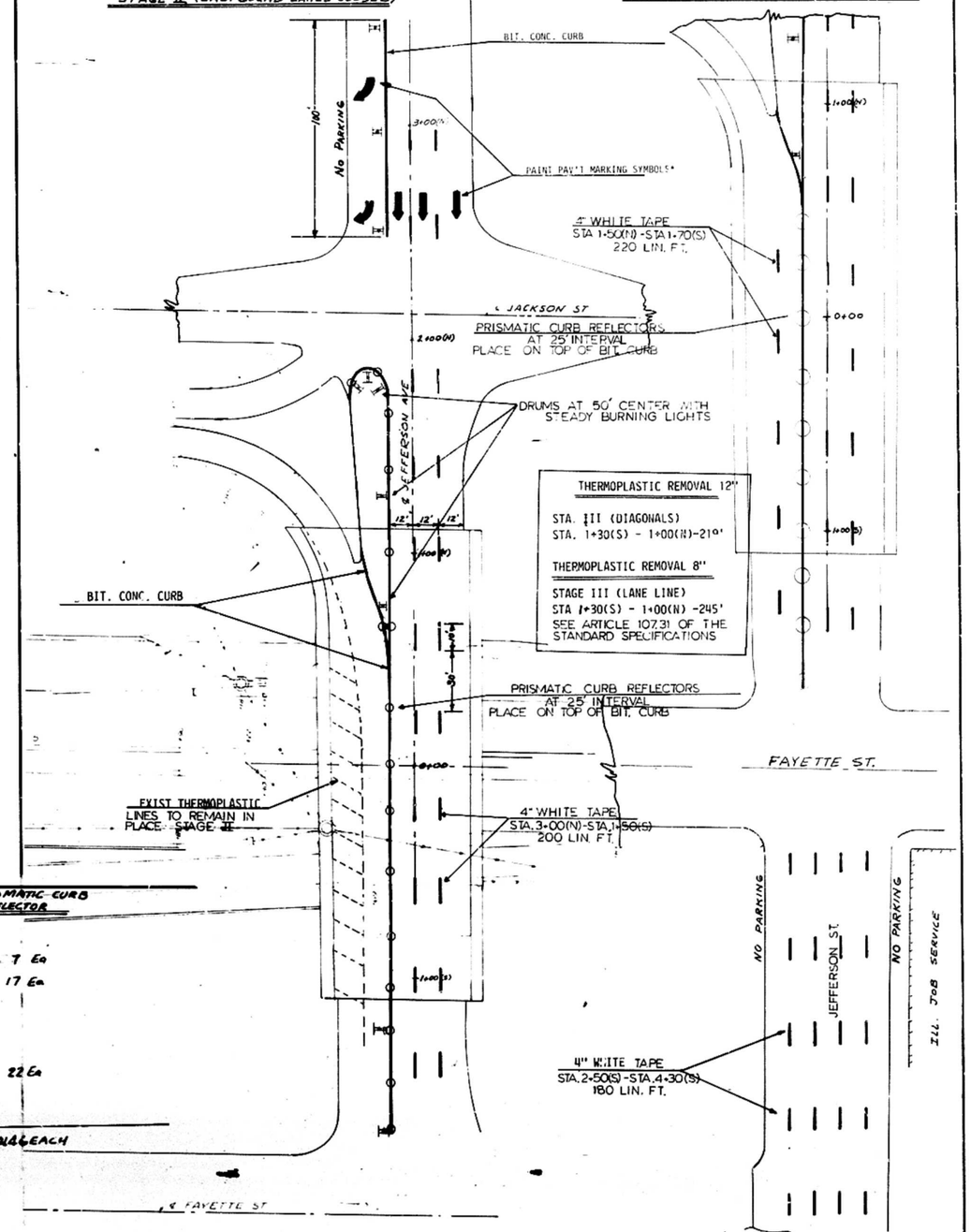

| ILLINOIS FED. ROAD DIV. NO. 6 | SECTION | COUNTY | TOTAL SHEETS | SHEET NO. |
|---|---|---|---|---|
| FAI 74 | (72,90) 100-1 | PEORIA TAZEWELL | 136 | 22 |
| FED. ROAD DIV. NO. 6 | ILLINOIS | PROJECT | | |

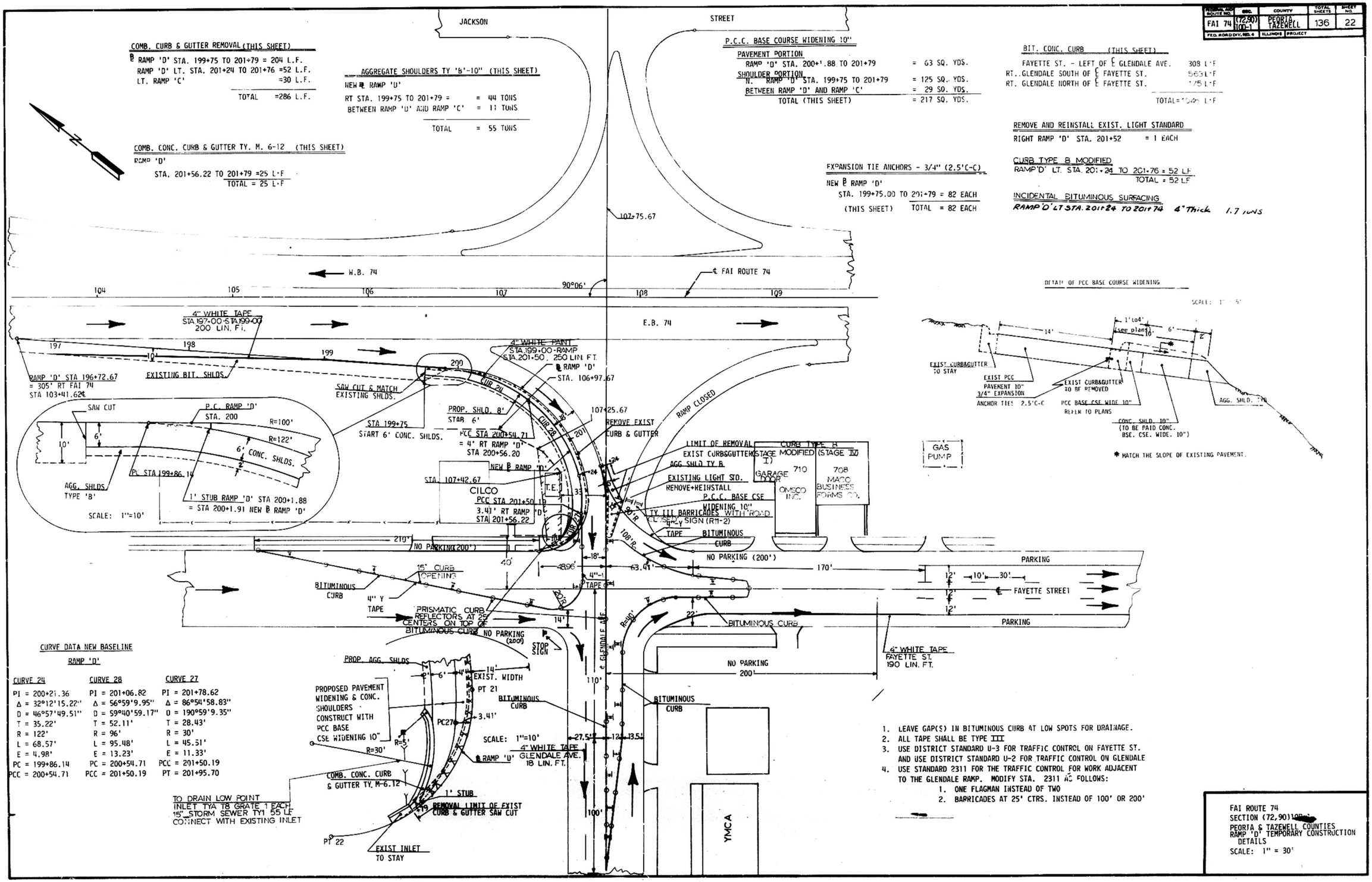


1. LEAVE GAP(S) IN BITUMINOUS CURB AT LOW SPOTS FOR DRAINAGE.
2. ALL TAPE SHALL BE TYPE III
3. USE DISTRICT STANDARD U-3 FOR TRAFFIC CONTROL ON FAYETTE ST. AND USE DISTRICT STANDARD U-2 FOR TRAFFIC CONTROL ON GLENDALE
4. USE STANDARD 2311 FOR THE TRAFFIC CONTROL FOR WORK ADJACENT TO THE GLENDALE RAMP. MODIFY STA. 2311 AS FOLLOWS:
   1. ONE FLAGMAN INSTEAD OF TWO
   2. BARRICADES AT 25' CTRS. INSTEAD OF 100' OR 200'

FAI ROUTE 74
SECTION (72,90)100-1
PEORIA & TAZEWELL COUNTIES
RAMP 'D' TEMPORARY CONSTRUCTION DETAILS
SCALE: 1" = 30'

| MONTH | FEDERAL AID PROJECT | COUNTY | TOTAL SHEETS | SHEET NO. |
|---|---|---|---|---|
| FAI 74 | (72,90) | PEORIA | 136 | 23 |
| MAY 74 | 10D-1 | TAZEWELL | | |
| | 129+75 | STA. 138+85 | | |

POLE, METAL 45 FT. MH, 6'-0" DAVIT ARM 2 EACH
POLE FOUNDATION 2 EACH
LAMP 250 WATT, H.P.S. 2 EACH
LUMINAIRE RECTILINEAR TYPE: 250 WATT H.P.S. 2 EACH
ELECTRIC CONDUCTOR (BARE ANNEALED COPPER) NO.6 308 L.F.
LOCATION A 204 L.F.
LOCATION B 104 L.F.
ELECTRIC CABLE UNIT DUCT., 2-600 VXLP#6; 1" POLYETHYLENE 308 L.F.
LOCATION A 204 L.F
LOCATION B 104 L.F.

TRENCH AND BACKFILL 300 L.F.
LOCATION A 200 L.F.
LOCATION B 100 L.F.

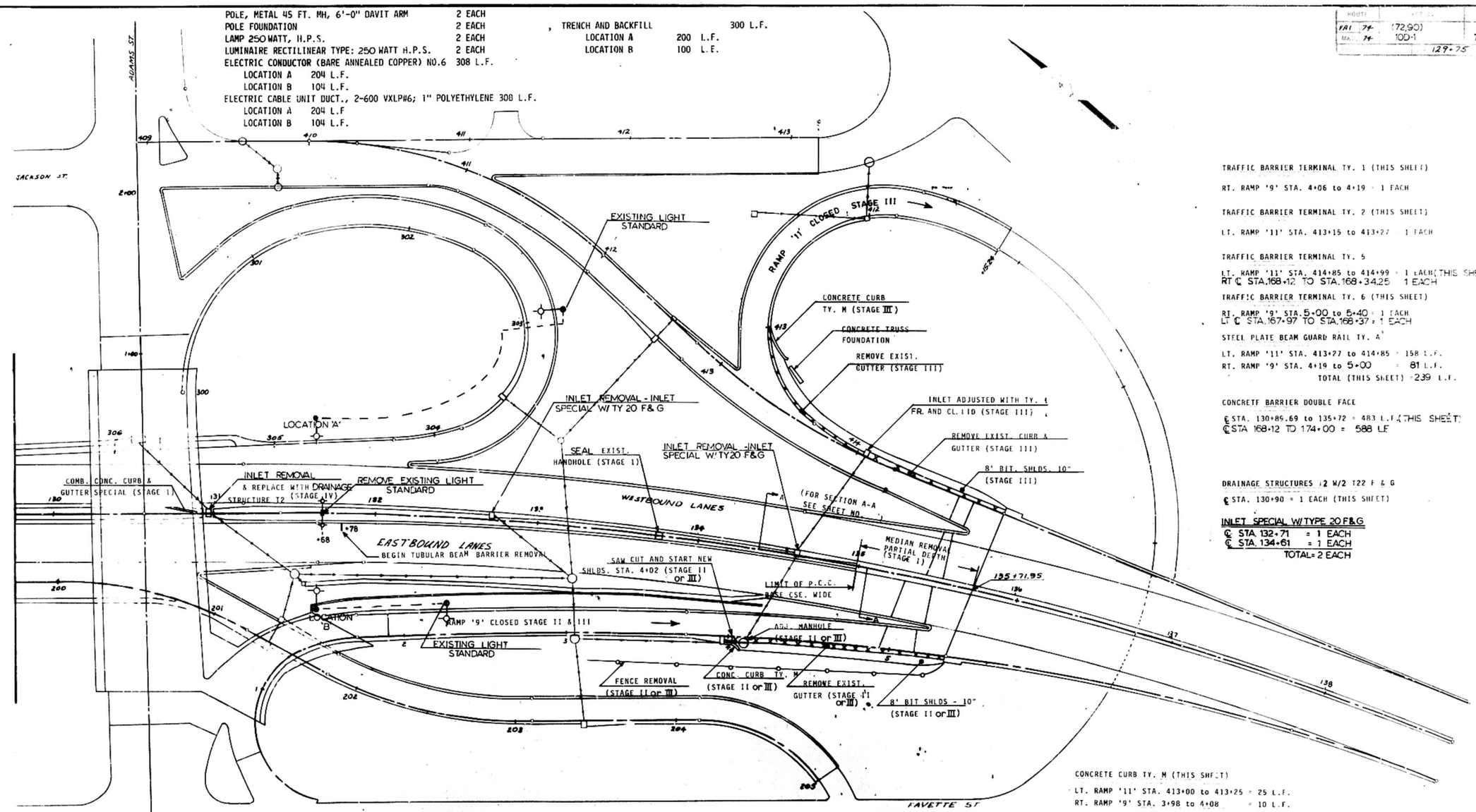


TRAFFIC BARRIER TERMINAL TY. 1 (THIS SHEET)

RT. RAMP '9' STA. 4+06 to 4+19 = 1 EACH

TRAFFIC BARRIER TERMINAL TY. 2 (THIS SHEET)

LT. RAMP '11' STA. 413+15 to 413+27 = 1 EACH

TRAFFIC BARRIER TERMINAL TY. 5

LT. RAMP '11' STA. 414+85 to 414+99 = 1 EACH (THIS SHEET)
RT ℄ STA. 168+12 TO STA. 168+34.25 1 EACH

TRAFFIC BARRIER TERMINAL TY. 6 (THIS SHEET)

RT. RAMP '9' STA. 5+00 to 5+40 = 1 EACH
LT ℄ STA. 167+97 TO STA. 168+37 = 1 EACH

STEEL PLATE BEAM GUARD RAIL TY. A

LT. RAMP '11' STA. 413+27 to 414+85 = 158 L.F.
RT. RAMP '9' STA. 4+19 to 5+00 = 81 L.F.
TOTAL (THIS SHEET) = 239 L.F.

CONCRETE BARRIER DOUBLE FACE

℄ STA. 130+86.69 to 135+72 = 483 L.F. (THIS SHEET)
℄ STA 168+12 TO 174+00 = 588 LF

DRAINAGE STRUCTURES 12 W/2 T22 F & G

℄ STA. 130+90 = 1 EACH (THIS SHEET)

INLET SPECIAL W/TYPE 20 F&G
℄ STA. 132+71 = 1 EACH
℄ STA. 134+61 = 1 EACH
TOTAL = 2 EACH

TUBULAR BEAM MEDIAN BARRIER REMOVAL

℄ STA. 131+78 to 135+71.95 = 394 L.F. (THIS SHEET)

MEDIAN REMOVAL (PARTIAL)

℄ STA. 134+99 to 135+72 = 439 SQ. FT. (THIS SHEET)

CHAIN LINK FENCE REMOVAL

RT. RAMP '9' STA. 3+23 to 5+35 = 212 L.F.

HANDHOLE TO BE SEALED

℄ STA. 133+75 = 1 EACH

INLETS TO BE REMOVED (THIS SHEET)

℄ STA. 130+90 = 1 EACH
℄ STA. 132+71 = 1 EACH
℄ STA. 134+61 = 1 EACH
TOTAL = 3 EACH

INLETS ADJUSTED WITH TY. 1 FR. AND CL. LID

LT. RAMP '11' STA. 414+04 = 1 EACH (THIS SHEET)

MANHOLE ADJUST.

RT. RAMP '9' STA. 4+10 = 1 EACH

S.P.B. GUARDRAIL REMOVAL

RT. RAMP '9' STA. 4+85 ± to 5+35 ± = 50 L.F.
LT. RAMP '11" STA. 413+36 ± to 414+99± = 161 L.F.
℄ STA. 130+90 TO STA. 132+05 = 280 L.F.
TOTAL (THIS SHEET) = 491 L.F.
LT ℄ STA. 168+00 TO 168+37 = 37 L.F.
RT ℄ STA. 168+12 TO 168+34.25 = 25 L.F.
TOTAL 553 L.F.

GUTTER REMOVAL

RT. RAMP '9' STA. 4+02 ± to 5+34 ± = 132 L.F.
LT. RAMP '11' STA. 413+00 to 414+02 102 L.F.
TOTAL (THIS SHEET) = 234 L.F.

COMB. CONC. CURB & GUTTER REMOVAL

LT. RAMP '11' STA. 414+02 to 414+99± = 97 L.F.
LT STA. 130+72 to RT. STA. 130+90± = 26 L.F.
℄ STA. 130+72 ± to LT. STA. 134+99± = 427 L.F.
℄ STA. 131+02± to RT. STA. 134+99± = 399 L.F.
TOTAL (THIS SHEET) 949 L.F.

COMB. CONC. CURB & GUTTER SPECIAL (THIS SHEET)

LT. STA. 130+72 to LT STA. 130+90± = 18 L.F.

3/4" EXPANSION TIE ANCHORS (THIS SHEET)

℄ STA. 130+90 to 134+99 = 328 EACH

CONCRETE CURB TY. M (THIS SHEET)

LT. RAMP '11' STA. 413+00 to 413+25 = 25 L.F.
RT. RAMP '9' STA. 3+98 to 4+08 = 10 L.F.
TOTAL = 35 L.F.

BITUMINOUS SHOULDERS 10"

LT. RAMP '11' STA. 413+00 to 414+99 = 159 SQ. YDS.
RT. RAMP '9' STA. 4+02 to 5+35 = 113 SQ. YDS.
TOTAL = 272 SQ. YDS.

P.C.C. BASE COURSE WIDENING 10"

℄ STA. 130+90± to 134+99 = 449 SQ. YDS.
TOTAL (THIS SHEET) = 449 SQ. YDS.

REMOVE EXISTING LIGHT STANDARD

℄ STA. 131+68± = 1 EACH (THIS SHEET)

BUTT JOINT

N. WEST ABUT. E.B. MAINLINE = 1 EACH
N. WEST ABUT. RAMP '9' = 1 EACH
TOTAL = 2 EACH

BITUMINOUS CONC. SURFACE CSE. MIX "D" CL. I

N. WEST ABUT. EASTBOUND LANE = 14 TONS
N. WEST ABUT. WESTBOUND LANE = 5 TONS
TOTAL = 19 TONS

B.M. Concrete monument ℄ Sta. 164+31.12 Elev. 440.87
B.M. Iron rod at Southwest corner Fayette and Washington Streets, Peoria Elev. 474.47
Existing Structure #090-0001

# STATE OF ILLINOIS
# DEPARTMENT OF TRANSPORTATION

| ROUTE NO. | SECTION | COUNTY | TOTAL SHEETS | SHEET NO. |
|---|---|---|---|---|
| S.B.I. / F.A. | | | 136 | 24 |
| PROJ. GROUP SHT. NO. 7 | ILLINOIS | PROJ. AID PROJECT- | | |

SHEET NO. 1
75 SHEETS

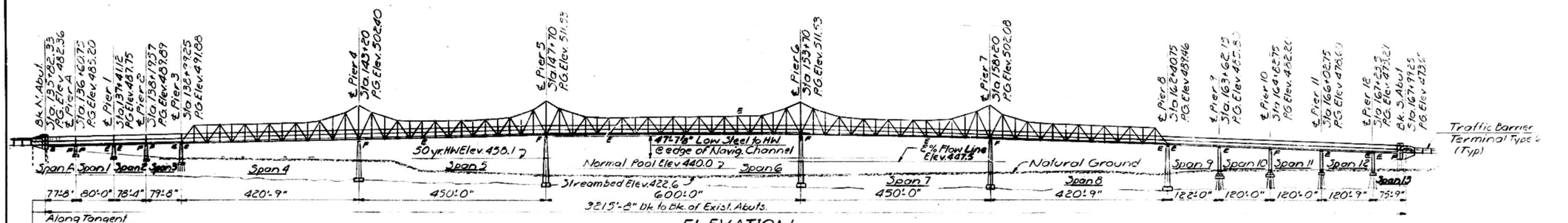


ELEVATION

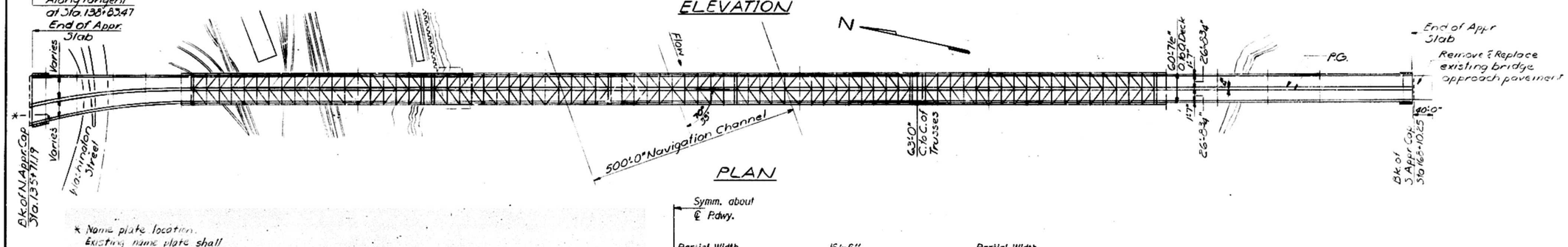


PLAN

* Name plate location. Existing name plate shall be cleaned and relocated next to new name plate (Cost incidental)

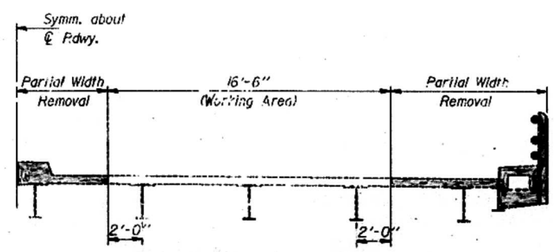


STAGE I & II CONSTRUCTION SEQUENCE FOR REMOVAL AND REPLACEMENT OF EXISTING TRUSS DECK

1. Full width deck removal shall be limited to 180 ft. (6 consecutive panel lengths).
2. Partial width deck removal (as shown in sketch) shall be limited to six (6) additional panels in succession.
3. Any succeeding panel deck removal in excess of the limits set in 1 & 2 above shall be preceded by deck replacement (in equivalent load to existing deck) of a previous full width panel removed.
4. The six (6) consecutive full width deck removal limitations specified in 1 above may be waived in the suspended portion of truss in Span 6 only.
5. Any deviations from the deck removal and replacement sequence indicated above shall be subject to written approval by the Engineer.

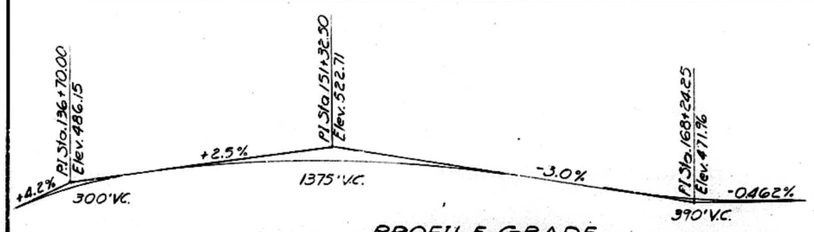


PROFILE GRADE

| | |
|---|---|
| DESIGNED | Ronald McFarland |
| CHECKED | R. L. Brown |
| DRAWN | JGS |
| CHECKED | R. L. B. |

December 20, 1983
EXAMINED
PASSED
APPROVED

DESIGN STRESSES
$f'_c$ = 3500 psi
$f_y$ = 36,000 psi (Structural Steel)
$f_v$ = 60,000 psi (Reinforcement)

Design Specifications: 1977 AASHTO, 1978 through 1982 interim specs.
DESIGN LOADING HS20-44

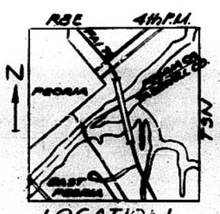


LOCATION SKETCH

GENERAL PLAN
MURRAY BAKER BRIDGE
OVER ILLINOIS RIVER AT PEORIA
FAI ROUTE 74
SECTION 10D-1
PEORIA-TAZEWELL COUNTIES
STATION 151+85

STATE OF ILLINOIS
DEPARTMENT OF TRANSPORTATION

| ROUTE NO. | SECTION | COUNTY | TOTAL SHEETS | SHEET NO. |
|---|---|---|---|---|
| F.A.I. | | | 136 | 25 |
| FED. ROAD DIST. NO. 7 | | ILLINOIS | FED. AID PROJECT- | |

SHEET NO. 2
75 SHEETS

## GENERAL NOTES

All new fasteners shall be high strength bolts. Bolts $\frac{3}{4}''$ $\phi$, open holes $\frac{13}{16}''$ $\phi$ and bolts $\frac{7}{8}''$ $\phi$, open holes $\frac{15}{16}''$ $\phi$, except for bolts placed into existing holes.

The basic lead silico chromate paint system shall be used for shop and field painting of new structural steel, except the final field coat shall be burnt orange. See Special Provisions.

All contact surfaces of joints for the diaphragms shall be free of paint or lacquer.

Field welding of construction accessories will not be permitted to the bottom flange of beams or girders nor to the top flange for a distance equal to one-fourth the span length each way from the pier supports. Field welding in other areas will be permitted only when approved by the engineer.

Anchor bolts shall be set before bolting diaphragms over supports.

Reinforcement bars shall conform to the requirements of AASHTO M-31 or M-53 Grade 60.

Plan dimensions and details relative to existing structure have been taken from existing plans and are subject to nominal construction variations. It shall be the Contractor's responsibility to verify such dimensions and details in the field and make necessary approved adjustments prior to construction or ordering of materials. Such variations shall not be cause for additional compensation for a change in the scope of the work, however, the Contractor will be paid for the quantity actually furnished at the unit price bid for the work.

All remaining existing structural steel shall be cleaned by Method II. Areas cleaned by Method II shall be spot painted. All remaining existing structural steel shall receive two field coats of basic lead silico chromate paint, with the final field coat being burnt orange.

All new structural steel shall conform to the requirements of AASHTO M-183, unless otherwise noted.

Structural steel and concrete repairs were prepared in accordance with Volumes 1 & 2 of the inspection report prepared by the Bureau of Maintenance and the additional report (dated September 16, 1982) furnishd by District 4. The Engineer, during construction, may determine that modifications or additions to these repairs may be necessary. Any such modifications or additions shall be paid for at the same rate as the unit price bid for the particular item.

The contractor shall coordinate the concrete slab work with other repair work on the structure.

Remove and replace all bird screens. Additional screens are required. Cost incidental to "Cleaning and Painting Steel Bridge". See Special Provisions.

Any missing or deteriorated rivets, not in areas where structural steel removal and replacement are taking place shall be replaced with H.S. bolts of the same diameter, as directed by the Engineer. Cost to be billed as "Rivet Replacement".

STATION 151+85
REBUILT 19 BY
STATE OF ILLINOIS
F.A.I. RTE. 74 SEC. 10D-1
F.A. PROJ.
LOADING HS20
STR. NO. 090-0001

**NAME PLATE**
See Std. 2113

## TOTAL BILL OF MATERIAL

| ITEM | UNIT | SUPER | SUB | TOTAL |
|---|---|---|---|---|
| Concrete Removal | Cu. Yds. | | 4.5 | 4.5 |
| Removal of Existing Concrete Deck | L.S. | | | 1 |
| Floor Drains | Each | 55 | | 55 |
| Protective Coat | Sq. Yds. | | | 25,290 |
| Class X Concrete | Cu. Yds. | 5,858.5 | 0.9 | 5,859.4 |
| Structural Steel | Lbs. | 987,680 | | 987,680 |
| Handrail Removal | Lin. Ft. | 6,440 | | 6,440 |
| Cleaning and Painting Steel Bridge | L.S. | | | 1 |
| Reinforcement Bars | Lbs. | 2,500 | 40 | 2,540 |
| Reinforcement Bars (Epoxy Coated) | Lbs. | 1,415,910 | | 1,415,910 |
| Name Plates | Each | | | 1 |
| Elastomeric Bearing Assembly, Type I | Each | | | 62 |
| Elastomeric Bearing Assembly, Type II | Each | | | 16 |
| | | | | |
| Jacking and Cribbing | Each | | | 78 |
| Neoprene Expansion Joint (4") | Lin. Ft. | | | 190 |
| Neoprene Expansion Joint ($6\frac{1}{2}$") | Lin. Ft. | | | 190 |
| Neoprene Expansion Joint (9") | Lin. Ft. | | | 64 |
| Preformed Joint Seal ($2\frac{1}{2}$") | Lin. Ft. | 1,534 | | 1,534 |
| Drainage Scuppers, Special | Each | 149 | | 149 |
| Rivet Replacement | Each | 100 | | 100 |
| Structual Steel Removal | Lbs. | 1,021,560 | | 1,021,560 |
| Bearing Rehabilitation | Each | | | 4 |
| Drainage System | L.S. | | | 1 |

| | |
|---|---|
| DESIGNED | Patrick M. Patrone |
| CHECKED | R. L. Brown |
| DRAWN | P.S.Mc. |
| CHECKED | R. L. B. |

December 20 1983
ENGINEER OF BRIDGES AND STRUCTURES
APPROVED
DIRECTOR OF HIGHWAYS

**GENERAL DATA**
**F.A.I. ROUTE 74 SECTION 10D-1**
**PEORIA-TAZEWELL COUNTIES**
**STATION 151+85**

STATE OF ILLINOIS
DEPARTMENT OF TRANSPORTATION

| ROUTE NO. | SECTION | COUNTY | TOTAL SHEETS | SHEET NO. |
|---|---|---|---|---|
| F.A.I. | | | 136 | 26 |
| FED. ROAD DIST. NO. 7 | | ILLINOIS | FED. AID PROJECT | |

SHEET NO. 3
75 SHEETS

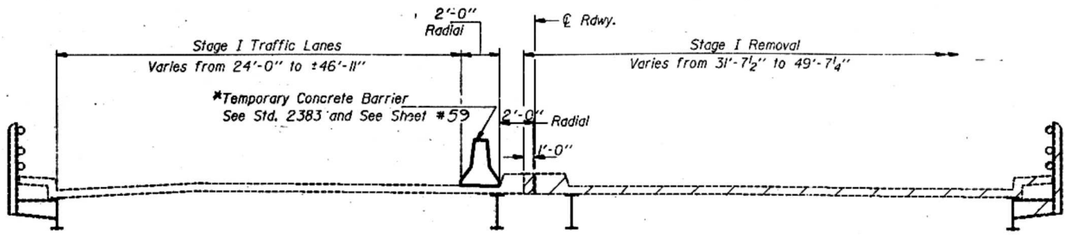


**STAGE I REMOVAL**
(Looking South)

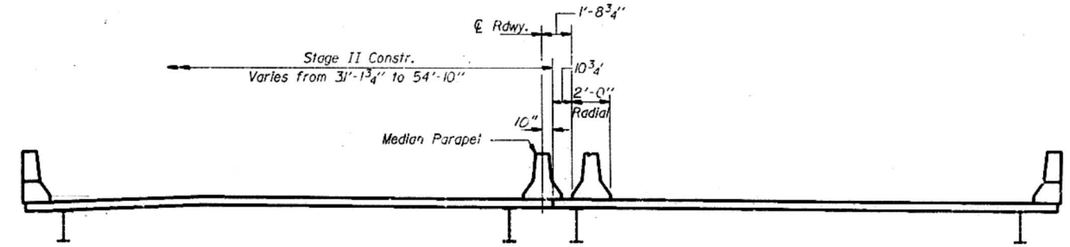


**STAGE II CONSTRUCTION**
(Looking South)

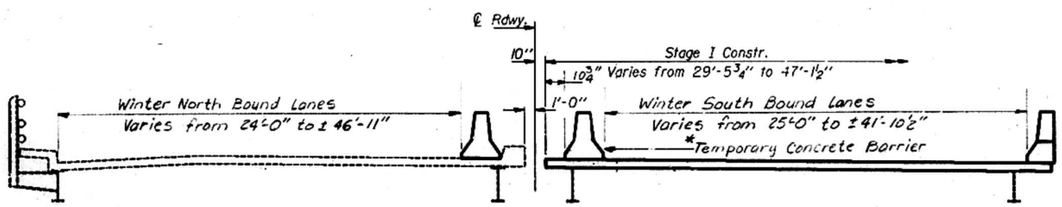


**STAGE I CONSTRUCTION**
(Looking South)

Notes: The cost of removing existing rails, posts, connectors, light poles, and rail post brackets shall be incidental to "Handrail Removal". See Sh. 64.
Hatched area indicates existing removal.
All existing beams shall remain.
* Temporary Concrete Barrier billed with Roadway Plans.

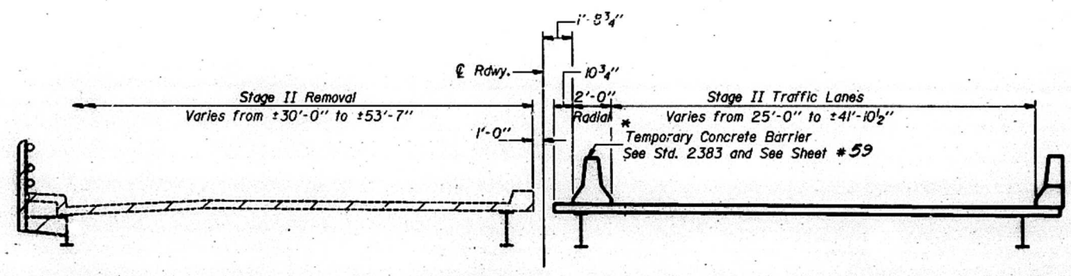


**STAGE II REMOVAL**
(Looking South)

| | |
|---|---|
| DESIGNED | Patrick McStone |
| CHECKED | R. L. Brown |
| DRAWN | J.T. Downing |
| CHECKED | R. L. B. |

December 20 1983

**STAGE CONSTRUCTION**
**NORTH APPROACH**
**F.A.I. RT. 74 SEC. 10D-1**
**PEORIA-TAZEWELL COUNTIES**
**STA. 151+85**

Rev. 8-17-84

STATE OF ILLINOIS
DEPARTMENT OF TRANSPORTATION

| | | | | | |
|---|---|---|---|---|---|
| | | | | | SHEET NO. 4 |
| | | | 136 | 28 | 75 SHEETS |

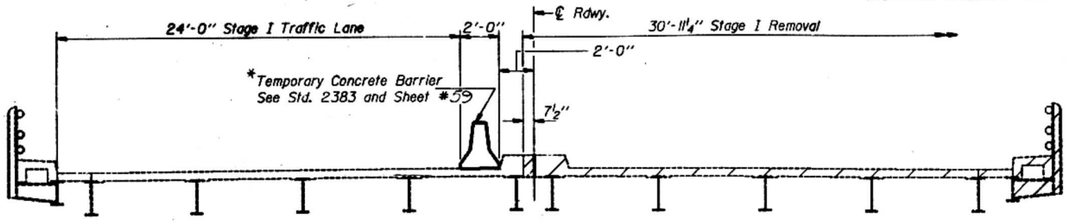


**STAGE I REMOVAL**
(Looking South)

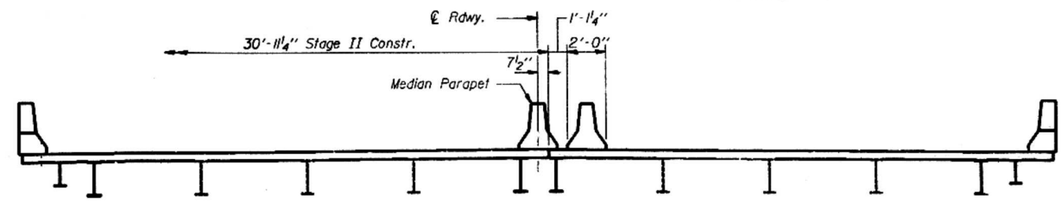


**STAGE II CONSTRUCTION**
(Looking South)

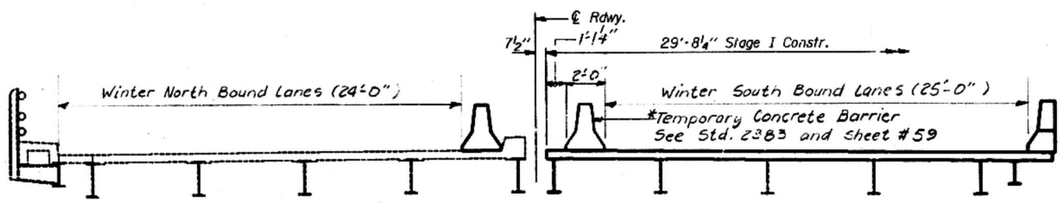


**STAGE I CONSTRUCTION**
(Looking South)

Notes: The cost of removing existing rails, posts, connectors and rail post brackets shall be incidental to "Handrail Removal".
Hatched area indicates existing removal.
For removal of Existing Structural Steel, See Special Provisions.
* Temporary Concrete Barrier billed with Roadway Plans.

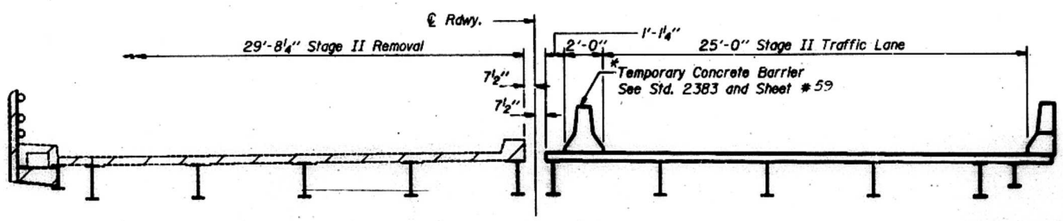


**STAGE II REMOVAL**
(Looking South)

| | |
|---|---|
| DESIGNED | Patrick McPhione |
| CHECKED | A.H. Brown |
| DRAWN | John F. Schneller Jr. |
| CHECKED | A.H.B. |

December 22 1983

**STAGE CONSTRUCTION FOR**

**TRUSS SPANS #4 THRU #8**
**F.A.I. RT. 74 SEC. 00-1**
**PEORIA-TAZEWELL COUNTIES**
**STA. 154+85**

STATE OF ILLINOIS
DEPARTMENT OF TRANSPORTATION

| ROUTE NO. | SECTION | COUNTY | TOTAL SHEETS | SHEET NO. |
|---|---|---|---|---|
| F.A.I. | | | 136 | 29 |
| FED. ROAD DIST. NO. 7 | ILLINOIS | FED. AID PROJECT- | | |

SHEET NO. 5
75 SHEETS

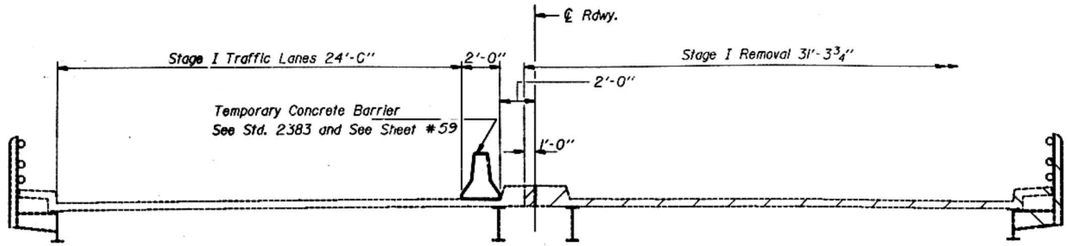


**STAGE I REMOVAL**
(Looking South)

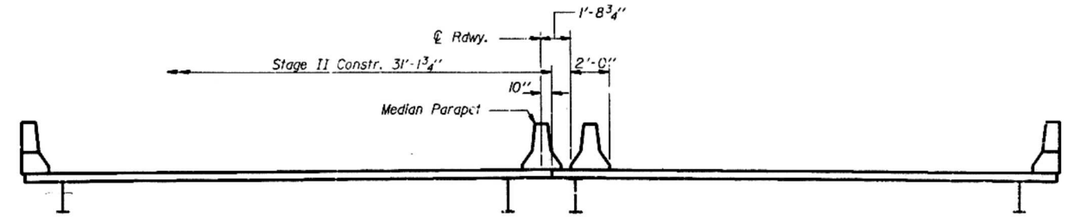


**STAGE II CONSTRUCTION**
(Looking South)

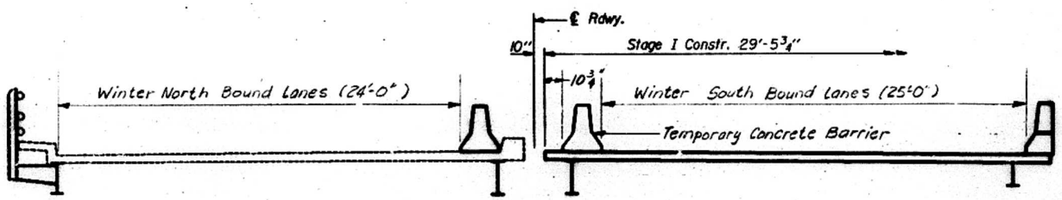


**STAGE I CONSTRUCTION**
(Looking South)

Notes: The cost of removing existing rails, posts, connectors, light poles, and rail post brackets shall be incidental to "Handrail Removal". See Sh. 64
Hatched area indicates existing removal.
All existing beams shall remain.

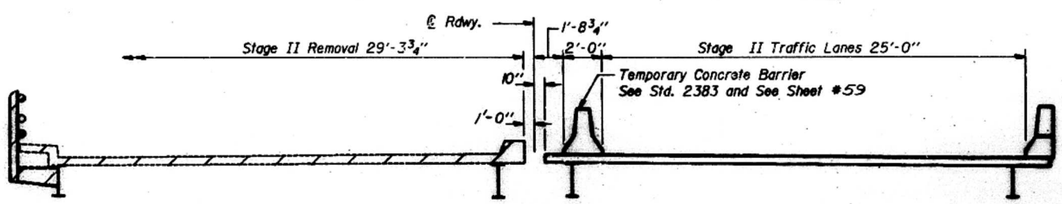


**STAGE II REMOVAL**
(Looking South)

| | |
|---|---|
| DESIGNED | Richard M. Brown |
| CHECKED | A.L. Brown |
| DRAWN | J.T. Downing |
| CHECKED | A.L.B. |

December 21, 1983
APPROVED
ENGINEER OF DESIGN

**STAGE CONSTRUCTION**
**SOUTH APPROACH**
**F.A.I. RT. 74 SEC. 100-1**
**PEORIA-TAZEWELL COUNTIES**
**STA. 84+95**

Rev. 2-17-84

| ROUTE NO. | SECTION | COUNTY | TOTAL SHEETS | SHEET NO. |
|---|---|---|---|---|
| F.A.I. | | | 136 | 30 |

SHEET NO. 6
75 SHEETS

# STATE OF ILLINOIS
# DEPARTMENT OF TRANSPORTATION

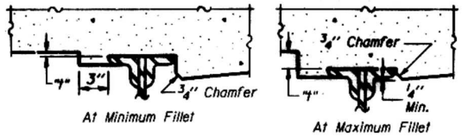


*To determine "t": After existing concrete deck has been removed, elevations of the top flanges of the beams shall be taken at intervals shown below. These elevations subtracted from the "Theoretical Grade Elevations Adjusted for Dead Load Deflection" shown on sheets # 7 and 8, minus slab thickness, equals the fillet heights "t" above top flange of beams.*

## FILLET HEIGHTS

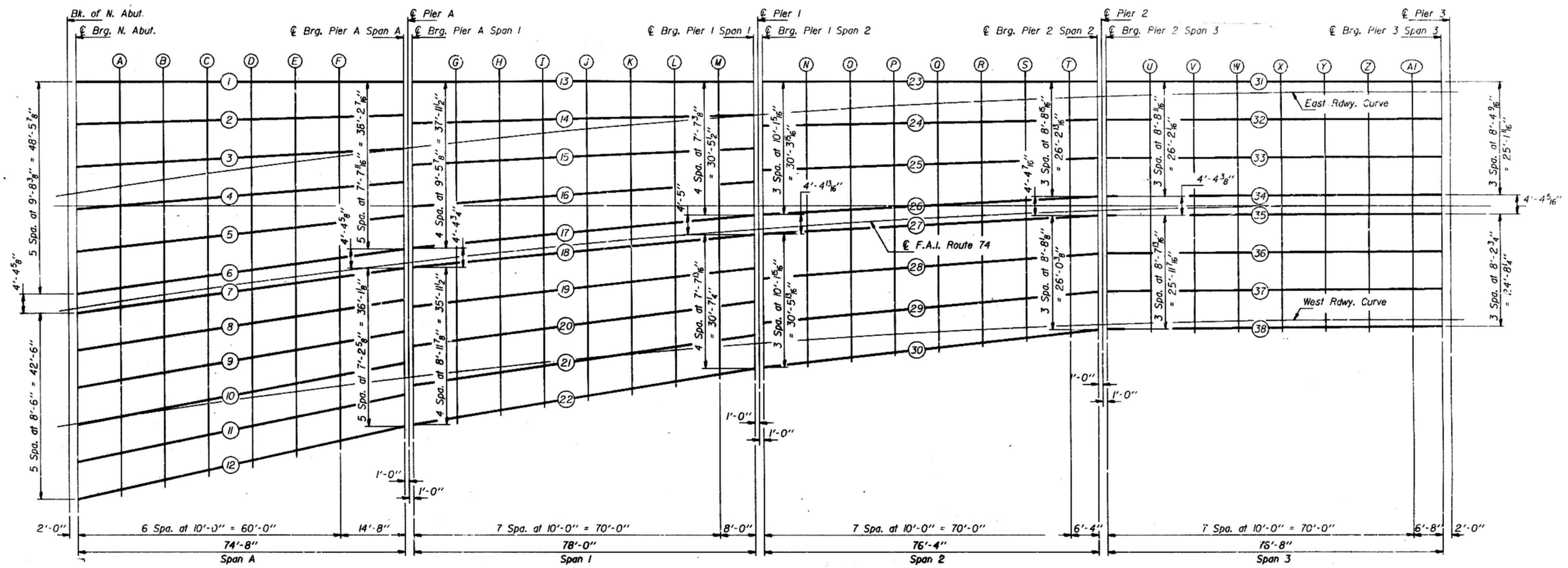


## PLAN

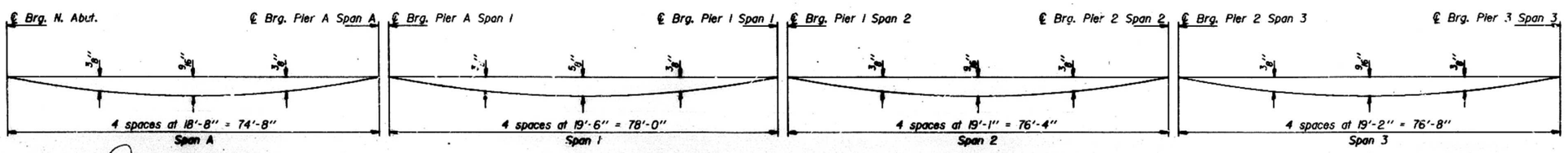


| | |
|---|---|
| DESIGNED | Pamela M Petrunic |
| CHECKED | A.L. Brown |
| DRAWN | P.S.M^c. |
| CHECKED | A.L.B. |

December 20 1983
DIRECTOR OF HIGHWAYS

## DEAD LOAD DEFLECTION DIAGRAM

(Includes weight of concrete only)

**Note:** *The above deflections are not to be used in the field if the engineer is working from the grade elevations adjusted for dead load deflections as shown on sheets # 7 and 8.*

## DECK ELEVATIONS
## NORTH APPROACH SPANS
## F.A.I. ROUTE 74 SECTION 10D-1
## PEORIA-TAZEWELL COUNTIES
## STATION 151+85

STATE OF ILLINOIS
DEPARTMENT OF TRANSPORTATION

| ROUTE NO. | SECTION | COUNTY | TOTAL SHEETS | SHEET NO. |
|---|---|---|---|---|
| F.A.I. 74 | | | 136 | 31 |
| FED. ROAD DIST. NO. 7 | ILLINOIS | FED. AID PROJECT- | | |

SHEET NO. 7
75 SHEETS

## BEAM 1

| Location | Station | Offset | Theoretical Grade Elevations | Theoretical Grade Elevations Adjusted For Dead Load Deflection |
|---|---|---|---|---|
| BACK OF NORTH ABUT. | 13590.132 | -50.382 | 482.944 | 482.944 |
| CL BRG. NORTH ABUT. | 13592.058 | -50.078 | 483.025 | 483.025 |
| A | 13601.698 | -48.588 | 483.427 | 483.446 |
| B | 13611.352 | -47.145 | 483.821 | 483.858 |
| C | 13621.019 | -45.759 | 484.205 | 484.254 |
| D | 13630.701 | -44.420 | 484.590 | 484.638 |
| E | 13640.395 | -43.131 | 484.964 | 485.004 |
| F | 13650.102 | -41.893 | 485.332 | 485.360 |
| CL BRG. SPAN 4 PIER 4 | 13664.372 | -40.166 | 485.859 | 485.859 |

## BEAM 2

| | | | | |
|---|---|---|---|---|
| BACK OF NORTH ABUT. | 13588.671 | -40.744 | 483.101 | 483.101 |
| CL BRG. NORTH ABUT. | 13590.615 | -40.443 | 483.180 | 483.180 |
| A | 13600.341 | -39.265 | 483.577 | 483.596 |
| B | 13610.078 | -38.055 | 483.967 | 484.004 |
| C | 13619.827 | -36.972 | 484.350 | 484.395 |
| D | 13629.587 | -35.900 | 484.727 | 484.775 |
| E | 13639.358 | -34.878 | 485.097 | 485.137 |
| F | 13649.135 | -33.908 | 485.460 | 485.488 |
| CL BRG. SPAN 4 PIER 4 | 13663.512 | -32.576 | 485.981 | 485.981 |

## BEAM 3

| | | | | |
|---|---|---|---|---|
| BACK OF NORTH ABUT. | 13587.196 | -31.109 | 483.257 | 483.257 |
| CL BRG. NORTH ABUT. | 13589.157 | -30.910 | 483.335 | 483.335 |
| A | 13598.970 | -29.950 | 483.726 | 483.747 |
| B | 13608.793 | -29.042 | 484.113 | 484.150 |
| C | 13618.624 | -28.185 | 484.492 | 484.537 |
| D | 13628.464 | -27.380 | 484.862 | 484.910 |
| E | 13638.312 | -26.626 | 485.230 | 485.270 |
| F | 13648.167 | -25.924 | 485.561 | 485.586 |
| CL BRG. SPAN 4 PIER 4 | 13662.645 | -24.986 | 486.028 | 486.028 |

## BEAM 4

| | | | | |
|---|---|---|---|---|
| BACK OF NORTH ABUT. | 13585.706 | -21.472 | 483.120 | 483.120 |
| CL BRG. NORTH ABUT. | 13587.685 | -21.327 | 483.191 | 483.191 |
| A | 13597.587 | -20.633 | 483.544 | 483.563 |
| B | 13607.495 | -19.990 | 483.894 | 483.931 |
| C | 13617.410 | -19.399 | 484.241 | 484.286 |
| D | 13627.331 | -18.861 | 484.583 | 484.631 |
| E | 13637.257 | -18.374 | 484.922 | 484.962 |
| F | 13647.188 | -17.940 | 485.257 | 485.286 |
| CL BRG. SPAN 4 PIER 4 | 13661.772 | -17.397 | 485.742 | 485.742 |

## BEAM 5

| | | | | |
|---|---|---|---|---|
| BACK OF NORTH ABUT. | 13584.200 | -11.838 | 482.737 | 482.737 |
| CL BRG. NORTH ABUT. | 13586.198 | -11.746 | 482.811 | 482.811 |
| A | 13596.190 | -11.316 | 483.177 | 483.164 |
| B | 13606.186 | -10.935 | 483.540 | 483.577 |
| C | 13616.185 | -10.614 | 483.895 | 483.944 |
| D | 13626.188 | -10.342 | 484.254 | 484.307 |
| E | 13636.193 | -10.123 | 484.607 | 484.647 |
| F | 13646.200 | -9.953 | 484.952 | 484.981 |
| CL BRG. SPAN 4 PIER 4 | 13660.891 | -9.803 | 485.455 | 485.455 |

## BEAM 6

| Location | Station | Offset | Theoretical Grade Elevations | Theoretical Grade Elevations Adjusted For Dead Load Deflection |
|---|---|---|---|---|
| BACK OF NORTH ABUT. | 13582.660 | -2.205 | 482.371 | 482.371 |
| CL BRG. NORTH ABUT. | 13584.697 | -2.166 | 482.445 | 482.445 |
| A | 13594.775 | -2.001 | 482.832 | 482.851 |
| B | 13604.864 | -1.889 | 483.210 | 483.247 |
| C | 13614.945 | -1.830 | 483.582 | 483.627 |
| D | 13625.034 | -1.825 | 483.949 | 483.997 |
| E | 13635.120 | -1.873 | 484.310 | 484.350 |
| F | 13645.204 | -1.974 | 484.664 | 484.692 |
| CL BRG. SPAN 4 PIER 4 | 13660.004 | -2.219 | 485.175 | 485.175 |

## BEAM 7

| | | | | |
|---|---|---|---|---|
| BACK OF NORTH ABUT. | 13581.092 | 2.123 | 482.345 | 482.345 |
| CL BRG. NORTH ABUT. | 13584.013 | 2.164 | 482.422 | 482.422 |
| A | 13594.117 | 2.346 | 482.807 | 482.826 |
| B | 13604.222 | 2.472 | 483.186 | 483.223 |
| C | 13614.325 | 2.540 | 483.560 | 483.605 |
| D | 13624.436 | 2.565 | 483.927 | 483.975 |
| E | 13634.543 | 2.531 | 484.289 | 484.336 |
| F | 13644.650 | 2.444 | 484.645 | 484.673 |
| CL BRG. SPAN 4 PIER 4 | 13659.482 | 2.219 | 485.157 | 485.157 |

## BEAM 8

| | | | | |
|---|---|---|---|---|
| BACK OF NORTH ABUT. | 13580.643 | 10.551 | 482.023 | 482.023 |
| CL BRG. NORTH ABUT. | 13582.678 | 10.561 | 482.106 | 482.106 |
| A | 13592.853 | 10.578 | 482.492 | 482.511 |
| B | 13603.027 | 10.542 | 482.873 | 482.910 |
| C | 13613.201 | 10.451 | 483.252 | 483.297 |
| D | 13623.374 | 10.306 | 483.626 | 483.674 |
| E | 13633.545 | 10.108 | 483.995 | 484.035 |
| F | 13643.713 | 9.856 | 484.361 | 484.389 |
| CL BRG. SPAN 4 PIER 4 | 13658.633 | 9.388 | 484.891 | 484.891 |

## BEAM 9

| | | | | |
|---|---|---|---|---|
| BACK OF NORTH ABUT. | 13579.282 | 18.978 | 481.658 | 481.658 |
| CL BRG. NORTH ABUT. | 13581.331 | 18.955 | 481.768 | 481.768 |
| A | 13591.578 | 18.810 | 482.163 | 482.182 |
| B | 13601.822 | 18.610 | 482.554 | 482.591 |
| C | 13612.064 | 18.356 | 482.941 | 482.986 |
| D | 13622.303 | 18.048 | 483.324 | 483.372 |
| E | 13632.538 | 17.685 | 483.702 | 483.742 |
| F | 13642.769 | 17.267 | 484.076 | 484.104 |
| CL BRG. SPAN 4 PIER 4 | 13657.778 | 16.557 | 484.618 | 484.618 |

## BEAM 10

| | | | | |
|---|---|---|---|---|
| BACK OF NORTH ABUT. | 13577.905 | 27.404 | 481.348 | 481.348 |
| CL BRG. NORTH ABUT. | 13579.973 | 27.345 | 481.425 | 481.425 |
| A | 13590.291 | 27.041 | 481.834 | 481.855 |
| B | 13600.606 | 26.678 | 482.234 | 482.271 |
| C | 13610.917 | 26.261 | 482.629 | 482.674 |
| D | 13621.223 | 25.788 | 483.021 | 483.069 |
| E | 13631.523 | 25.261 | 483.408 | 483.449 |
| F | 13641.818 | 24.679 | 483.791 | 483.816 |
| CL BRG. SPAN 4 PIER 4 | 13656.916 | 23.725 | 484.344 | 484.344 |

## BEAM 11

| Location | Station | Offset | Theoretical Grade Elevations | Theoretical Grade Elevations Adjusted For Dead Load Deflection |
|---|---|---|---|---|
| BACK OF NORTH ABUT. | 13576.523 | 35.829 | 481.008 | 481.008 |
| CL BRG. NORTH ABUT. | 13578.602 | 35.741 | 481.090 | 481.090 |
| A | 13588.594 | 35.271 | 481.504 | 481.523 |
| B | 13599.380 | 34.745 | 481.913 | 481.950 |
| C | 13609.761 | 34.164 | 482.317 | 482.362 |
| D | 13620.134 | 33.528 | 482.717 | 482.765 |
| E | 13630.501 | 32.836 | 483.113 | 483.153 |
| F | 13640.856 | 32.089 | 483.505 | 483.533 |
| CL BRG. SPAN 4 PIER 4 | 13656.047 | 30.893 | 484.072 | 484.072 |

## BEAM 12

| | | | | |
|---|---|---|---|---|
| BACK OF NORTH ABUT. | 13575.125 | 44.252 | 480.666 | 480.666 |
| CL BRG. NORTH ABUT. | 13577.219 | 44.133 | 480.751 | 480.751 |
| A | 13587.685 | 43.500 | 481.174 | 481.193 |
| B | 13598.144 | 42.812 | 481.592 | 481.629 |
| C | 13608.595 | 42.068 | 482.006 | 482.051 |
| D | 13619.037 | 41.267 | 482.414 | 482.462 |
| E | 13629.470 | 40.411 | 482.819 | 482.859 |
| F | 13639.892 | 39.499 | 483.219 | 483.247 |
| CL BRG. SPAN 4 PIER 4 | 13655.172 | 38.060 | 483.798 | 483.798 |

## BEAM 13

| | | | | |
|---|---|---|---|---|
| CL BRG. SPAN 1 PIER 1 | 13666.313 | -39.851 | 485.930 | 485.930 |
| G | 13676.050 | -38.780 | 486.281 | 486.301 |
| H | 13685.795 | -37.720 | 486.624 | 486.664 |
| I | 13695.558 | -36.711 | 486.961 | 487.009 |
| J | 13705.326 | -35.752 | 487.292 | 487.347 |
| K | 13715.104 | -34.845 | 487.616 | 487.683 |
| L | 13724.891 | -33.988 | 487.934 | 487.971 |
| M | 13734.686 | -33.183 | 488.244 | 488.260 |
| CL BRG. SPAN 1 PIER 1 | 13742.526 | -22.576 | 488.489 | 488.489 |

## BEAM 14

| | | | | |
|---|---|---|---|---|
| CL BRG. SPAN 1 PIER 1 | 13665.253 | -30.463 | 486.082 | 486.082 |
| G | 13675.063 | -29.586 | 486.429 | 486.449 |
| H | 13684.882 | -28.760 | 486.766 | 486.804 |
| I | 13694.709 | -27.985 | 487.101 | 487.145 |
| J | 13704.543 | -27.262 | 487.428 | 487.483 |
| K | 13714.385 | -26.590 | 487.749 | 487.796 |
| L | 13724.233 | -25.971 | 488.050 | 488.087 |
| M | 13734.087 | -25.401 | 488.328 | 488.344 |
| CL BRG. SPAN 1 PIER 1 | 13741.972 | -94.983 | 488.549 | 488.549 |

## BEAM 15

| | | | | |
|---|---|---|---|---|
| CL BRG. SPAN 1 PIER 1 | 13664.183 | -21.037 | 485.946 | 485.946 |
| G | 13674.067 | -20.393 | 486.258 | 486.278 |
| H | 13683.957 | -19.801 | 486.566 | 486.606 |
| I | 13693.852 | -19.261 | 486.869 | 486.917 |
| J | 13703.752 | -18.772 | 487.165 | 487.224 |
| K | 13713.655 | -18.336 | 487.456 | 487.513 |
| L | 13723.565 | -17.951 | 487.739 | 487.796 |
| M | 13733.483 | -17.618 | 488.047 | 488.063 |
| CL BRG. SPAN 1 PIER 1 | 13741.412 | -17.386 | 488.275 | 488.275 |

## BEAM 16

| Location | Station | Offset | Theoretical Grade Elevations | Theoretical Grade Elevations Adjusted For Dead Load Deflection |
|---|---|---|---|---|
| CL BRG. SPAN 1 PIER 1 | 13663.102 | -11.610 | 485.592 | 485.592 |
| G | 13673.060 | -11.199 | 485.914 | 485.934 |
| H | 13683.022 | -10.841 | 486.232 | 486.272 |
| I | 13692.988 | -10.535 | 486.547 | 486.595 |
| J | 13702.956 | -10.282 | 486.857 | 486.912 |
| K | 13712.927 | -10.081 | 487.164 | 487.211 |
| L | 13722.899 | -9.932 | 487.467 | 487.504 |
| M | 13732.873 | -9.835 | 487.765 | 487.781 |
| CL BRG. SPAN 1 PIER 1 | 13740.850 | -9.799 | 488.002 | 488.002 |

## BEAM 17

| | | | | |
|---|---|---|---|---|
| CL BRG. SPAN 1 PIER 1 | 13662.011 | -2.183 | 485.243 | 485.243 |
| G | 13672.045 | -2.006 | 485.581 | 485.601 |
| H | 13682.080 | -1.882 | 485.912 | 485.953 |
| I | 13692.116 | -1.810 | 486.240 | 486.288 |
| J | 13702.152 | -1.792 | 486.560 | 486.615 |
| K | 13712.188 | -1.826 | 486.875 | 486.922 |
| L | 13722.224 | -1.913 | 487.185 | 487.222 |
| M | 13732.255 | -2.052 | 487.488 | 487.504 |
| CL BRG. SPAN 1 PIER 1 | 13740.283 | -2.202 | 487.727 | 487.727 |

## BEAM 18

| | | | | |
|---|---|---|---|---|
| CL BRG. SPAN 1 PIER 1 | 13661.502 | 2.183 | 485.226 | 485.226 |
| G | 13671.558 | 2.365 | 485.565 | 485.585 |
| H | 13681.616 | 2.495 | 485.893 | 485.933 |
| I | 13691.674 | 2.571 | 486.216 | 486.264 |
| J | 13701.734 | 2.595 | 486.536 | 486.591 |
| K | 13711.793 | 2.565 | 486.852 | 486.899 |
| L | 13721.852 | 2.483 | 487.164 | 487.201 |
| M | 13731.909 | 2.348 | 487.473 | 487.489 |
| CL BRG. SPAN 1 PIER 1 | 13739.951 | 2.202 | 487.716 | 487.716 |

## BEAM 19

| | | | | |
|---|---|---|---|---|
| CL BRG. SPAN 1 PIER 1 | 13660.453 | 11.112 | 484.895 | 484.895 |
| G | 13670.576 | 11.129 | 485.255 | 485.255 |
| H | 13680.698 | 11.063 | 485.571 | 485.611 |
| I | 13690.820 | 11.003 | 485.903 | 485.951 |
| J | 13700.940 | 10.860 | 486.230 | 486.285 |
| K | 13711.059 | 10.664 | 486.554 | 486.601 |
| L | 13721.175 | 10.414 | 486.874 | 486.911 |
| M | 13731.285 | 10.112 | 487.190 | 487.207 |
| CL BRG. SPAN 1 PIER 1 | 13739.374 | 9.831 | 487.441 | 487.441 |

## BEAM 20

| | | | | |
|---|---|---|---|---|
| CL BRG. SPAN 1 PIER 1 | 13659.395 | 20.041 | 484.555 | 484.555 |
| G | 13669.585 | 19.893 | 484.903 | 484.923 |
| H | 13679.772 | 19.691 | 485.247 | 485.287 |
| I | 13689.958 | 19.435 | 485.588 | 485.636 |
| J | 13700.140 | 19.126 | 485.924 | 485.979 |
| K | 13710.319 | 18.762 | 486.257 | 486.304 |
| L | 13720.493 | 18.346 | 486.584 | 486.621 |
| M | 13730.663 | 17.875 | 486.908 | 486.924 |
| CL BRG. SPAN 1 PIER 1 | 13738.792 | 17.460 | 487.184 | 487.184 |

Note:
Offsets are measured at right angles to ℄ of Roadway.

DESIGNED Patrick M. Rettenmaier
CHECKED D. L. Brown
DRAWN R. Doty
CHECKED D. L. B.
E-S 6-1-82

December 20 1983
EXAMINED
PASSED
ENGINEER OF BRIDGE DESIGN
ENGINEER OF BRIDGES AND STRUCTURES
APPROVED
DIRECTOR OF HIGHWAYS

NORTH APPROACH
DECK ELEVATIONS
F.A.I. ROUTE 74 SECTION 10D-1
PEORIA-TAZEWELL COUNTIES
STATION 151+85

STATE OF ILLINOIS
**DEPARTMENT OF TRANSPORTATION**

| ROUTE NO. | SECTION | COUNTY | TOTAL SHEETS | SHEET NO. |
|---|---|---|---|---|
| F.A. | | | 136 | 32 |
| FED. ROAD DIST. NO. 7 | | ILLINOIS | FED. AID PROJECT- | |

SHEET NO 8
75 SHEETS

## BEAM 21

| Location | Station | Offset | Theoretical Grade Elevations | Theoretical Grade Elevations Adjusted For Dead Load Deflection |
|---|---|---|---|---|
| CL BRG. SPAN 1 PIER A | 13658.326 | 28.969 | 484.215 | 484.215 |
| G | 13668.584 | 28.835 | 484.572 | 484.592 |
| H | 13678.838 | 28.288 | 484.924 | 484.964 |
| I | 13689.088 | 27.866 | 485.273 | 485.321 |
| J | 13699.333 | 27.391 | 485.617 | 485.672 |
| K | 13709.572 | 26.861 | 485.957 | 486.004 |
| L | 13719.805 | 26.276 | 486.294 | 486.331 |
| M | 13730.032 | 25.638 | 486.626 | 486.642 |
| CL BRG. SPAN 1 PIER B | 13738.205 | 25.089 | 486.887 | 486.887 |

## BEAM 22

| | | | | |
|---|---|---|---|---|
| CL BRG. SPAN 1 PIER A | 13657.248 | 37.896 | 483.874 | 483.874 |
| G | 13667.574 | 37.416 | 484.240 | 484.260 |
| H | 13677.895 | 36.885 | 484.601 | 484.641 |
| I | 13688.210 | 36.297 | 484.957 | 485.005 |
| J | 13698.518 | 35.655 | 485.310 | 485.365 |
| K | 13708.815 | 34.958 | 485.659 | 485.706 |
| L | 13719.112 | 34.207 | 486.003 | 486.040 |
| M | 13729.396 | 33.401 | 486.342 | 486.358 |
| CL BRG. SPAN 1 PIER B | 13737.614 | 32.718 | 486.611 | 486.611 |

## BEAM 23

| | | | | |
|---|---|---|---|---|
| CL BRG. SPAN 2 PIER 1 | 13744.488 | -32.441 | 488.549 | 488.549 |
| N | 13754.299 | -31.742 | 488.847 | 488.866 |
| O | 13764.116 | -31.094 | 489.138 | 489.174 |
| P | 13773.940 | -30.497 | 489.408 | 489.452 |
| Q | 13783.765 | -29.952 | 489.669 | 489.698 |
| R | 13793.604 | -29.458 | 489.880 | 489.921 |
| S | 13803.444 | -29.015 | 490.104 | 490.135 |
| T | 13813.288 | -28.624 | 490.320 | 490.332 |
| CL BRG. SPAN 2 PIER 2 | 13819.521 | -28.403 | 490.452 | 490.452 |

## BEAM 24

| | | | | |
|---|---|---|---|---|
| CL BRG. SPAN 2 PIER 1 | 13743.761 | -22.358 | 488.513 | 488.513 |
| N | 13753.635 | -21.834 | 488.783 | 488.802 |
| O | 13763.514 | -21.361 | 489.048 | 489.084 |
| P | 13773.397 | -20.940 | 489.298 | 489.342 |
| Q | 13783.284 | -20.570 | 489.522 | 489.571 |
| R | 13793.175 | -20.253 | 489.743 | 489.784 |
| S | 13803.065 | -19.987 | 489.961 | 489.992 |
| T | 13812.966 | -19.773 | 490.175 | 490.187 |
| CL BRG. SPAN 2 PIER 2 | 13819.231 | -19.664 | 490.309 | 490.309 |

## BEAM 25

| Location | Station | Offset | Theoretical Grade Elevations | Theoretical Grade Elevations Adjusted For Dead Load Deflection |
|---|---|---|---|---|
| CL BRG. SPAN 2 PIER L | 13743.027 | -12.277 | 488.150 | 488.150 |
| N | 13752.965 | -11.927 | 488.428 | 488.447 |
| O | 13762.905 | -11.629 | 488.702 | 488.738 |
| P | 13772.849 | -11.383 | 488.968 | 489.012 |
| Q | 13782.795 | -11.189 | 489.216 | 489.265 |
| R | 13792.742 | -11.047 | 489.463 | 489.504 |
| S | 13802.691 | -10.958 | 489.703 | 489.734 |
| T | 13812.640 | -10.920 | 489.942 | 489.954 |
| CL BRG. SPAN 2 PIER 2 | 13818.935 | -10.924 | 490.090 | 490.090 |

## BEAM 26

| | | | | |
|---|---|---|---|---|
| CL BRG. SPAN 2 PIER L | 13742.285 | -2.195 | 487.787 | 487.787 |
| N | 13752.287 | -2.020 | 488.077 | 488.096 |
| O | 13762.291 | -1.857 | 488.363 | 488.399 |
| P | 13772.295 | -1.826 | 488.643 | 488.687 |
| Q | 13782.300 | -1.808 | 488.917 | 488.966 |
| R | 13792.305 | -1.842 | 489.186 | 489.227 |
| S | 13802.305 | -1.925 | 489.449 | 489.480 |
| T | 13812.312 | -2.068 | 489.707 | 489.719 |
| CL BRG. SPAN 2 PIER 2 | 13818.644 | -2.184 | 489.870 | 489.870 |

## BEAM 27

| | | | | |
|---|---|---|---|---|
| CL BRG. SPAN 2 PIER 1 | 13741.960 | 2.195 | 487.775 | 487.775 |
| N | 13751.985 | 2.368 | 488.062 | 488.081 |
| O | 13762.012 | 2.488 | 488.343 | 488.379 |
| P | 13772.040 | 2.556 | 488.621 | 488.665 |
| Q | 13782.068 | 2.571 | 488.896 | 488.945 |
| R | 13792.096 | 2.534 | 489.166 | 489.207 |
| S | 13802.123 | 2.444 | 489.433 | 489.464 |
| T | 13812.149 | 2.301 | 489.695 | 489.707 |
| CL BRG. SPAN 2 PIER 2 | 13818.495 | 2.184 | 489.858 | 489.858 |

## BEAM 28

| | | | | |
|---|---|---|---|---|
| CL BRG. SPAN 2 PIER 1 | 13741.203 | 12.328 | 487.409 | 487.409 |
| N | 13751.295 | 12.311 | 487.704 | 487.723 |
| O | 13761.387 | 12.241 | 487.994 | 488.030 |
| P | 13771.477 | 12.117 | 488.284 | 488.328 |
| Q | 13781.567 | 11.941 | 488.585 | 488.634 |
| R | 13791.654 | 11.712 | 488.882 | 488.923 |
| S | 13801.738 | 11.430 | 489.174 | 489.205 |
| T | 13811.819 | 11.095 | 489.460 | 489.472 |
| CL BRG. SPAN 2 PIER 2 | 13818.198 | 10.856 | 489.639 | 489.639 |

## BEAM 29

| | | | | |
|---|---|---|---|---|
| CL BRG. SPAN 2 PIER 1 | 13740.438 | 22.461 | 487.042 | 487.042 |
| N | 13750.598 | 22.253 | 487.346 | 487.365 |
| O | 13760.755 | 21.993 | 487.645 | 487.681 |
| P | 13770.910 | 21.679 | 487.943 | 487.987 |
| Q | 13781.061 | 21.311 | 488.232 | 488.322 |
| R | 13791.207 | 20.890 | 488.595 | 488.636 |
| S | 13801.349 | 20.416 | 488.912 | 488.943 |
| T | 13811.485 | 19.889 | 489.224 | 489.236 |
| CL BRG. SPAN 2 PIER 2 | 13817.099 | 19.528 | 489.417 | 489.417 |

## BEAM 30

| Location | Station | Offset | Theoretical Grade Elevations | Theoretical Grade Elevations Adjusted For Dead Load Deflection |
|---|---|---|---|---|
| CL BRG. SPAN 2 PIER 1 | 13735.664 | 32.593 | 486.675 | 486.675 |
| N | 13745.893 | 32.198 | 486.988 | 487.007 |
| O | 13760.117 | 31.744 | 487.296 | 487.332 |
| P | 13770.336 | 31.240 | 487.601 | 487.645 |
| Q | 13780.549 | 30.681 | 487.957 | 488.006 |
| R | 13790.756 | 30.068 | 488.307 | 488.368 |
| S | 13800.956 | 29.402 | 488.650 | 488.681 |
| T | 13811.149 | 28.683 | 488.985 | 488.997 |
| CL BRG. SPAN 2 PIER 2 | 13817.596 | 28.199 | 489.194 | 489.194 |

## BEAM 31

| | | | | |
|---|---|---|---|---|
| CL BRG. SPAN 3 PIER 2 | 13821.491 | -28.339 | 490.495 | 490.495 |
| U | 13831.341 | -28.040 | 490.702 | 490.721 |
| V | 13841.194 | -27.793 | 490.906 | 490.942 |
| W | 13851.049 | -27.558 | 491.110 | 491.154 |
| X | 13860.906 | -27.454 | 491.314 | 491.363 |
| Y | 13870.764 | -27.362 | 491.518 | 491.559 |
| Z | 13880.623 | -27.322 | 491.721 | 491.752 |
| A1 | 13890.582 | -27.320 | 491.926 | 491.938 |
| CL BRG. SPAN 3 PIER 3 | 13897.250 | -27.320 | 492.063 | 492.063 |

## BEAM 32

| | | | | |
|---|---|---|---|---|
| CL BRG. SPAN 3 PIER 2 | 13821.210 | -19.619 | 490.352 | 490.352 |
| U | 13831.106 | -19.364 | 490.555 | 490.578 |
| V | 13841.004 | -19.161 | 490.770 | 490.806 |
| W | 13850.504 | -19.010 | 490.982 | 491.026 |
| X | 13860.806 | -18.910 | 491.195 | 491.244 |
| Y | 13870.708 | -18.863 | 491.410 | 491.451 |
| Z | 13880.610 | -18.867 | 491.625 | 491.656 |
| A1 | 13890.582 | -18.910 | 491.843 | 491.855 |
| CL BRG. SPAN 3 PIER 3 | 13897.250 | -18.940 | 491.987 | 491.987 |

## BEAM 33

| | | | | |
|---|---|---|---|---|
| CL BRG. SPAN 3 PIER 2 | 13820.928 | -10.900 | 490.136 | 490.136 |
| U | 13830.870 | -10.689 | 490.363 | 490.382 |
| V | 13840.814 | -10.529 | 490.592 | 490.628 |
| W | 13850.759 | -10.422 | 490.822 | 490.866 |
| X | 13860.705 | -10.367 | 491.054 | 491.102 |
| Y | 13870.651 | -10.363 | 491.286 | 491.327 |
| Z | 13880.598 | -10.412 | 491.520 | 491.551 |
| A1 | 13890.582 | -10.500 | 491.754 | 491.766 |
| CL BRG. SPAN 3 PIER | 13897.250 | -10.560 | 491.910 | 491.910 |

## BEAM 34

| | | | | |
|---|---|---|---|---|
| CL BRG. SPAN 3 PIER 2 | 13820.642 | -2.181 | 489.920 | 489.920 |
| U | 13830.631 | -2.013 | 490.166 | 490.185 |
| V | 13840.621 | -1.857 | 490.416 | 490.452 |
| W | 13850.612 | -1.834 | 490.665 | 490.709 |
| X | 13860.603 | -1.823 | 490.915 | 490.964 |
| Y | 13870.594 | -1.864 | 491.165 | 491.206 |
| Z | 13880.585 | -1.957 | 491.415 | 491.446 |
| A1 | 13890.582 | -2.050 | 491.666 | 491.678 |
| CL BRG. SPAN 3 PIER 3 | 13897.250 | -2.180 | 491.833 | 491.833 |

## BEAM 35

| Location | Station | Offset | Theoretical Grade Elevations | Theoretical Grade Elevations Adjusted For Dead Load Deflection |
|---|---|---|---|---|
| CL BRG. SPAN 3 PIER 2 | 13820.495 | 2.181 | 489.909 | 489.909 |
| U | 13830.510 | 2.349 | 490.156 | 490.175 |
| V | 13840.523 | 2.465 | 490.404 | 490.440 |
| W | 13850.537 | 2.528 | 490.654 | 490.698 |
| X | 13860.551 | 2.535 | 490.905 | 490.954 |
| Y | 13870.565 | 2.497 | 491.157 | 491.194 |
| Z | 13880.578 | 2.403 | 491.409 | 491.440 |
| A1 | 13890.582 | 2.270 | 491.662 | 491.674 |
| CL BRG. SPAN 3 PIER 3 | 13897.250 | 2.180 | 491.829 | 491.829 |

## BEAM 36

| | | | | |
|---|---|---|---|---|
| CL BRG. SPAN 3 PIER 2 | 13820.212 | 10.827 | 489.693 | 489.693 |
| U | 13830.270 | 10.942 | 489.959 | 489.978 |
| V | 13840.330 | 11.003 | 490.226 | 490.262 |
| W | 13850.390 | 11.013 | 490.495 | 490.539 |
| X | 13860.449 | 10.969 | 490.764 | 490.813 |
| Y | 13870.508 | 10.873 | 491.035 | 491.076 |
| Z | 13880.566 | 10.724 | 491.305 | 491.336 |
| A1 | 13890.582 | 10.536 | 491.575 | 491.587 |
| CL BRG. SPAN 3 PIER 3 | 13897.250 | 10.409 | 491.754 | 491.754 |

## BEAM 37

| | | | | |
|---|---|---|---|---|
| CL BRG. SPAN 3 PIER 2 | 13819.922 | 19.473 | 489.476 | 489.476 |
| U | 13830.028 | 19.534 | 489.760 | 489.779 |
| V | 13840.135 | 19.542 | 490.047 | 490.083 |
| W | 13850.241 | 19.497 | 490.335 | 490.379 |
| X | 13860.346 | 19.399 | 490.622 | 490.672 |
| Y | 13870.451 | 19.249 | 490.912 | 490.953 |
| Z | 13880.553 | 19.045 | 491.202 | 491.233 |
| A1 | 13890.582 | 18.802 | 491.488 | 491.500 |
| CL BRG. SPAN 3 PIER 3 | 13897.250 | 18.638 | 491.678 | 491.678 |

## BEAM 38

| | | | | |
|---|---|---|---|---|
| CL BRG. SPAN 3 PIER 2 | 13819.630 | 28.120 | 489.257 | 489.257 |
| U | 13829.784 | 28.127 | 489.562 | 489.581 |
| V | 13839.938 | 28.081 | 489.868 | 489.904 |
| W | 13850.091 | 27.982 | 490.175 | 490.219 |
| X | 13860.245 | 27.830 | 490.483 | 490.532 |
| Y | 13870.393 | 27.624 | 490.790 | 490.831 |
| Z | 13880.540 | 27.366 | 491.097 | 491.128 |
| A1 | 13890.582 | 27.067 | 491.402 | 491.414 |
| CL BRG. SPAN 3 PIER 3 | 13897.250 | 26.867 | 491.602 | 491.602 |

| | |
|---|---|
| DESIGNED | Patrick A. Pitts |
| CHECKED | W. L. Brown |
| DRAWN | R. Doty |
| CHECKED | W. L. B. |

E-S 6-1-82

December 20, 1983
EXAMINED James T. Hartman
PASSED
ENGINEER OF BRIDGES AND STRUCTURES
APPROVED
DIRECTOR OF HIGHWAYS

Note:
Offsets are measured at right angles to ℄ of Roadway.

NORTH APPROACH
DECK ELEVATIONS
F.A.I. ROUTE 74 SECTION 10D-1
PEORIA-TAZEWELL COUNTIES
STATION 151+85

STATE OF ILLINOIS
DEPARTMENT OF TRANSPORTATION

| ROUTE NO. | SECTION | COUNTY | TOTAL SHEETS | SHEET NO. |
|---|---|---|---|---|
| F.A.I. | | | 136 | 33 |

SHEET NO. 9
75 SHEETS

## ℄ OF ROADWAY

| Location | Station | Offset | Theoretical Grade Elevations | Theoretical Grade Elevations Adjusted For Dead Load Deflection |
|---|---|---|---|---|
| BACK OF NORTH ABUT. | 13582.330 | 0.000 | 482.358 | 482.358 |
| CL BRG. NORTH ABUT. | 13584.355 | 0.000 | 482.436 | 482.436 |
| A | 13594.475 | 0.000 | 482.821 | 482.840 |
| B | 13604.586 | 0.000 | 483.200 | 483.237 |
| C | 13614.690 | 0.000 | 483.573 | 483.618 |
| D | 13624.786 | 0.000 | 483.940 | 483.988 |
| E | 13634.875 | 0.000 | 484.301 | 484.341 |
| F | 13644.957 | 0.000 | 484.656 | 484.684 |
| CL BRG. SPAN 1 PIER A | 13655.743 | 0.000 | 485.166 | 485.166 |
| CL BRG. SPAN 1 PIER A | 13661.757 | 0.000 | 485.234 | 485.234 |
| G | 13671.822 | 0.000 | 485.573 | 485.593 |
| H | 13681.880 | 0.000 | 485.906 | 485.946 |
| I | 13691.934 | 0.000 | 486.234 | 486.282 |
| J | 13701.981 | 0.000 | 486.555 | 486.610 |
| K | 13712.024 | 0.000 | 486.870 | 486.917 |
| L | 13722.062 | 0.000 | 487.180 | 487.217 |
| M | 13732.096 | 0.000 | 487.483 | 487.498 |
| CL BRG. SPAN 1 PIER 1 | 13740.117 | 0.000 | 487.722 | 487.722 |
| CL BRG. SPAN 2 PIER 1 | 13742.123 | 0.000 | 487.781 | 487.781 |
| N | 13752.148 | 0.000 | 488.073 | 488.097 |
| O | 13762.170 | 0.000 | 488.360 | 488.398 |
| P | 13772.189 | 0.000 | 488.640 | 488.684 |
| Q | 13782.204 | 0.000 | 488.914 | 488.964 |
| R | 13792.217 | 0.000 | 489.184 | 489.225 |
| S | 13802.227 | 0.000 | 489.447 | 489.478 |
| T | 13812.235 | 0.000 | 489.704 | 489.716 |
| CL BRG. SPAN 2 PIER 2 | 13816.565 | 0.000 | 489.864 | 489.864 |
| CL BRG. SPAN 3 PIER 2 | 13820.571 | 0.000 | 489.914 | 489.914 |
| U | 13830.575 | 0.000 | 490.164 | 490.183 |
| V | 13840.578 | 0.000 | 490.414 | 490.450 |
| W | 13850.580 | 0.000 | 490.665 | 490.709 |
| X | 13860.581 | 0.000 | 490.915 | 490.964 |
| Y | 13870.582 | 0.000 | 491.165 | 491.206 |
| Z | 13880.582 | 0.000 | 491.415 | 491.446 |
| A1 | 13890.582 | 0.000 | 491.665 | 491.677 |
| CL BRG. SPAN 3 PIER 3 | 13897.250 | 0.000 | 491.831 | 491.831 |

## EAST ROADWAY CURVE

| Location | Station | Offset | Theoretical Grade Elevations | Theoretical Grade Elevations Adjusted For Dead Load Deflection |
|---|---|---|---|---|
| BACK OF NORTH ABUT. | 13586.517 | -26.707 | 483.328 | 483.328 |
| CL BRG. NORTH ABUT. | 13588.512 | -26.698 | 483.404 | 483.404 |
| A | 13596.482 | -26.651 | 483.784 | 483.803 |
| B | 13608.445 | -26.607 | 484.153 | 484.190 |
| C | 13618.401 | -26.563 | 484.519 | 484.564 |
| D | 13628.351 | -26.522 | 484.879 | 484.927 |
| E | 13638.294 | -26.482 | 485.233 | 485.273 |
| F | 13648.231 | -26.444 | 485.581 | 485.609 |
| CL BRG. SPAN 1 PIER A | 13662.806 | -26.390 | 486.081 | 486.081 |
| CL BRG. SPAN 1 PIER A | 13664.791 | -26.383 | 486.148 | 486.148 |
| G | 13674.713 | -26.349 | 486.481 | 486.501 |
| H | 13684.630 | -26.317 | 486.808 | 486.848 |
| I | 13694.542 | -26.286 | 487.129 | 487.177 |
| J | 13704.450 | -26.257 | 487.445 | 487.500 |
| K | 13714.353 | -26.229 | 487.755 | 487.802 |
| L | 13724.252 | -26.203 | 488.059 | 488.096 |
| M | 13734.147 | -26.178 | 488.357 | 488.373 |
| CL BRG. SPAN 1 PIER 1 | 13742.058 | -26.160 | 488.592 | 488.592 |
| CL BRG. SPAN 2 PIER 1 | 13744.036 | -26.155 | 488.650 | 488.650 |
| N | 13753.924 | -26.134 | 488.937 | 488.956 |
| O | 13763.809 | -26.114 | 489.218 | 489.254 |
| P | 13773.691 | -26.096 | 489.477 | 489.521 |
| Q | 13783.570 | -26.080 | 489.702 | 489.751 |
| R | 13793.447 | -26.065 | 489.920 | 489.961 |
| S | 13803.321 | -26.051 | 490.133 | 490.164 |
| T | 13813.194 | -26.039 | 490.341 | 490.353 |
| CL BRG. SPAN 2 PIER 2 | 13819.443 | -26.033 | 490.469 | 490.469 |
| CL BRG. SPAN 3 PIER 2 | 13821.417 | -26.031 | 490.509 | 490.509 |
| U | 13831.286 | -26.022 | 490.710 | 490.729 |
| V | 13841.155 | -26.014 | 490.910 | 490.946 |
| W | 13851.022 | -26.009 | 491.111 | 491.155 |
| X | 13860.885 | -26.004 | 491.312 | 491.361 |
| Y | 13870.755 | -26.002 | 491.514 | 491.555 |
| Z | 13880.121 | -26.001 | 491.715 | 491.746 |
| A1 | 13890.582 | -26.000 | 491.915 | 491.927 |
| CL BRG. SPAN 3 PIER 3 | 13897.250 | -26.000 | 492.049 | 492.049 |

## WEST ROADWAY CURVE

| Location | Station | Offset | Theoretical Grade Elevations | Theoretical Grade Elevations Adjusted For Dead Load Deflection |
|---|---|---|---|---|
| BACK OF NORTH ABUT. | 13576.008 | 26.758 | 481.372 | 481.372 |
| CL BRG. NORTH ABUT. | 13580.064 | 26.788 | 481.452 | 481.452 |
| A | 13590.339 | 26.736 | 481.845 | 481.864 |
| B | 13600.605 | 26.685 | 482.233 | 482.270 |
| C | 13610.862 | 26.637 | 482.614 | 482.659 |
| D | 13621.111 | 26.590 | 482.989 | 483.037 |
| E | 13631.351 | 26.545 | 483.358 | 483.398 |
| F | 13641.582 | 26.502 | 483.720 | 483.748 |
| CL BRG. SPAN 1 PIER A | 13656.587 | 26.443 | 484.241 | 484.241 |
| CL BRG. SPAN 1 PIER A | 13658.631 | 26.435 | 484.311 | 484.311 |
| G | 13668.843 | 26.396 | 484.657 | 484.677 |
| H | 13679.048 | 26.360 | 484.996 | 485.036 |
| I | 13689.247 | 26.325 | 485.330 | 485.378 |
| J | 13699.440 | 26.292 | 485.658 | 485.713 |
| K | 13709.627 | 26.261 | 485.979 | 486.026 |
| L | 13719.809 | 26.232 | 486.295 | 486.332 |
| M | 13729.986 | 26.204 | 486.604 | 486.620 |
| CL BRG. SPAN 1 PIER 1 | 13738.121 | 26.183 | 486.847 | 486.847 |
| CL BRG. SPAN 2 PIER 1 | 13740.155 | 26.178 | 486.907 | 486.907 |
| N | 13750.322 | 26.152 | 487.205 | 487.224 |
| O | 13760.485 | 26.132 | 487.496 | 487.532 |
| P | 13770.645 | 26.111 | 487.785 | 487.829 |
| Q | 13780.800 | 26.092 | 488.111 | 488.160 |
| R | 13790.953 | 26.075 | 488.433 | 488.474 |
| S | 13801.103 | 26.060 | 488.748 | 488.779 |
| T | 13811.250 | 26.047 | 489.056 | 489.068 |
| CL BRG. SPAN 2 PIER 2 | 13817.672 | 26.039 | 489.249 | 489.249 |
| CL BRG. SPAN 3 PIER 2 | 13819.701 | 26.037 | 489.310 | 489.310 |
| U | 13829.844 | 26.026 | 489.611 | 489.630 |
| V | 13839.986 | 26.018 | 489.911 | 489.947 |
| W | 13850.126 | 26.011 | 490.212 | 490.256 |
| X | 13860.265 | 26.006 | 490.513 | 490.562 |
| Y | 13870.404 | 26.002 | 490.814 | 490.855 |
| Z | 13880.542 | 26.001 | 491.115 | 491.146 |
| A1 | 13890.582 | 26.000 | 491.415 | 491.427 |
| CL BRG. SPAN 3 PIER 3 | 13897.250 | 26.000 | 491.616 | 491.616 |

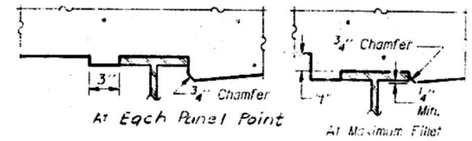


To determine "Y": The dead load deflections, as shown **below shall be used** as "Y" at the quarter points of each stringer between each panel point. There shall be no adjustment for dead load deflections at panel points.

## TRUSS FILLET HEIGHTS

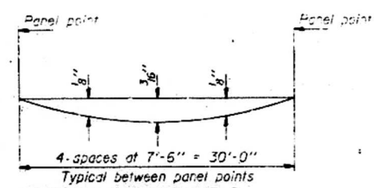


## TRUSS STRINGERS
## DEAD LOAD DEFLECTION DIAGRAM
(Includes weight of concrete only)

Note:
Offsets are measured at right angles to ℄ Roadway.

| | |
|---|---|
| DESIGNED | Patrick McKinnie |
| CHECKED | A. L. Brown |
| DRAWN | R. Doty |
| CHECKED | A. L. B. |

E-S 6-1-82

December 20 1983
EXAMINED
PASSED
APPROVED

NORTH APPROACH DECK ELEVATIONS
& TRUSS STRINGERS FILLET HEIGHT
F.A.I. ROUTE 74 SECTION 10D-1
PEORIA-TAZEWELL COUNTIES
STATION 151+85

| | | | | | |
|---|---|---|---|---|---|
| ROUTE NO. | SECTION | COUNTY | TOTAL SHEETS | SHEET NO. | |
| F.A.I. | | | 136 | 45 | SHEETS |
| FED. ROAD DIST. NO. 7 | | ILLINOIS | FED. AID PROJECT- | | |

# STATE OF ILLINOIS
# DEPARTMENT OF TRANSPORTATION

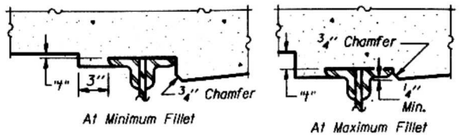


*To determine "t": After existing concrete deck has been removed, elevations of the top flanges of the beams shall be taken at intervals shown below. These elevations subtracted from the "Theoretical Grade Elevations Adjusted for Dead Load Deflection" shown below and on sheet # 11 minus slab thickness, equals the fillet heights "t" above top flange of beams.*

## FILLET HEIGHTS

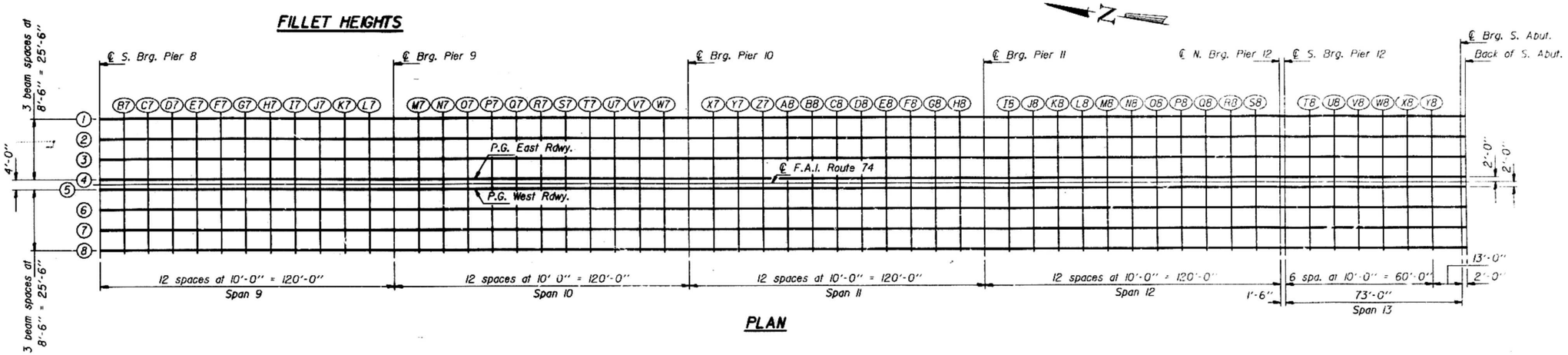


## PLAN

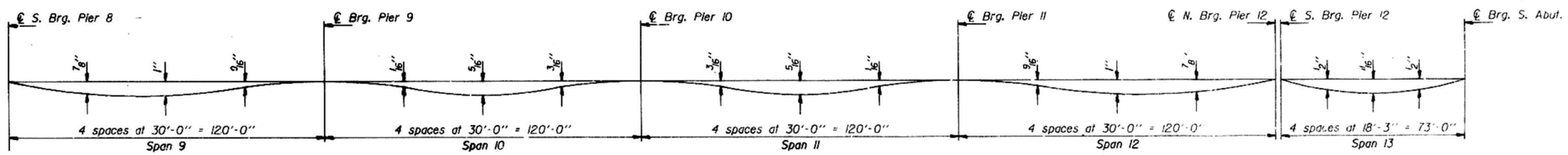


## DEAD LOAD DEFLECTION DIAGRAM

*(Includes weight of concrete only)*

*Note: The above deflections are not to be used in the field if the engineer is working from the grade elevations adjusted for dead load deflections as shown below and on sheet # 11 .*

## ℄ F.A.I. ROUTE 74

| Location | Station | Offset | Theoretical Grade Elevations | Theoretical Grade Elevations Adjusted For Dead Load Deflection |
|---|---|---|---|---|
| ℄ S. Brg. Pier 8 | 16242.750 | 0.000 | 489.405 | 489.405 |
| B7 | 16252.750 | 0.000 | 489.105 | 489.129 |
| C7 | 16262.750 | 0.000 | 488.805 | 488.853 |
| D7 | 16272.750 | 0.000 | 488.505 | 488.577 |
| E7 | 16282.750 | 0.000 | 488.205 | 488.283 |
| F7 | 16292.750 | 0.000 | 487.905 | 487.989 |
| G7 | 16302.750 | 0.000 | 487.605 | 487.696 |
| H7 | 16312.750 | 0.000 | 487.305 | 487.382 |
| I7 | 16322.750 | 0.000 | 487.005 | 487.069 |
| J7 | 16332.750 | 0.000 | 486.705 | 486.756 |
| K7 | 16342.750 | 0.000 | 486.405 | 486.439 |
| L7 | 16352.750 | 0.000 | 486.105 | 486.122 |
| ℄ Brg. Pier 9 | 16362.750 | 0.000 | 485.805 | 485.805 |
| M7 | 16372.750 | 0.000 | 485.505 | 485.505 |
| N7 | 16382.750 | 0.000 | 485.205 | 485.205 |
| O7 | 16392.750 | 0.000 | 484.905 | 484.905 |
| P7 | 16402.750 | 0.000 | 484.605 | 484.613 |
| Q7 | 16412.750 | 0.000 | 484.305 | 484.321 |
| R7 | 16422.750 | 0.000 | 484.005 | 484.028 |
| S7 | 16432.750 | 0.000 | 483.705 | 483.726 |
| T7 | 16442.750 | 0.000 | 483.405 | 483.423 |
| U7 | 16452.750 | 0.000 | 483.105 | 483.120 |
| V7 | 16462.750 | 0.000 | 482.805 | 482.815 |
| W7 | 16472.750 | 0.000 | 482.505 | 482.510 |
| ℄ Brg. Pier 10 | 16482.750 | 0.000 | 482.205 | 482.205 |
| X7 | 16492.750 | 0.000 | 481.905 | 481.911 |
| Y7 | 16502.750 | 0.000 | 481.605 | 481.616 |
| Z7 | 16512.750 | 0.000 | 481.305 | 481.322 |
| A8 | 16522.750 | 0.000 | 481.005 | 481.024 |
| B8 | 16532.750 | 0.000 | 480.705 | 480.727 |
| C8 | 16542.750 | 0.000 | 480.405 | 480.429 |
| D8 | 16552.750 | 0.000 | 480.105 | 480.122 |
| E8 | 16562.750 | 0.000 | 479.805 | 479.815 |
| F8 | 16572.750 | 0.000 | 479.505 | 479.508 |
| G8 | 16582.750 | 0.000 | 479.205 | 479.207 |
| H8 | 16592.750 | 0.000 | 478.905 | 478.906 |
| ℄ Brg. Pier 11 | 16602.750 | 0.000 | 478.605 | 478.605 |
| I8 | 16612.750 | 0.000 | 478.305 | 478.321 |
| J8 | 16622.750 | 0.000 | 478.005 | 478.037 |
| K8 | 16632.750 | 0.000 | 477.705 | 477.754 |
| L8 | 16642.750 | 0.000 | 477.411 | 477.472 |
| M8 | 16652.750 | 0.000 | 477.123 | 477.197 |
| N8 | 16662.750 | 0.000 | 476.842 | 476.928 |
| O8 | 16672.750 | 0.000 | 476.567 | 476.647 |
| P8 | 16682.750 | 0.000 | 476.298 | 476.373 |
| Q8 | 16692.750 | 0.000 | 476.036 | 476.105 |
| R8 | 16702.750 | 0.000 | 475.781 | 475.827 |
| S8 | 16712.750 | 0.000 | 475.532 | 475.555 |
| ℄ N. Brg. Pier 12 | 16722.750 | 0.000 | 475.289 | 475.289 |
| ℄ S. Brg. Pier 12 | 16724.250 | 0.000 | 475.254 | 475.254 |
| T8 | 16734.250 | 0.000 | 475.019 | 475.040 |
| U8 | 16744.250 | 0.000 | 474.790 | 474.831 |
| V8 | 16754.250 | 0.000 | 474.568 | 474.618 |
| W8 | 16764.250 | 0.000 | 474.353 | 474.406 |
| X8 | 16774.250 | 0.000 | 474.144 | 474.188 |
| Y8 | 16784.250 | 0.000 | 473.942 | 473.970 |
| ℄ Brg. S. Abut. | 16797.250 | 0.000 | 473.688 | 473.688 |
| Back of S. Abut. | 16799.250 | 0.000 | 473.650 | 473.650 |

| | |
|---|---|
| DESIGNED | R.A.M. Palmer |
| CHECKED | A.L. Brown |
| DRAWN | P.S.M. |
| CHECKED | A.L.B. |

Dec. 20 1983

**DECK ELEVATIONS**
**SOUTH APPROACH SPANS**
**F.A.I. ROUTE 74 SECTION 100-1**
**PEORIA-TAZEWELL COUNTIES**
**STATION 151+85**

STATE OF ILLINOIS
DEPARTMENT OF TRANSPORTATION

| STATE OF ILLINOIS | SECTION | COUNTY | TOTAL SHEETS | SHEET NO. |
|---|---|---|---|---|
| D.O.T. F.A. | | | 136 | 46 |
| FED. ROAD DIST. NO. 7 | ILLINOIS | FED. AID PROJECT- | | |

SHEET NO. 11
5 SHEETS

## BEAM 4, 5, P.G. EAST & WEST RDWY.

| Location | Station | Offset | Theoretical Grade Elevations | Theoretical Grade Elevations Adjusted For Dead Load Deflection |
|---|---|---|---|---|
| ℄ S. Brg. Pier 8 | 16242.750 | 2.000 | 489.405 | 489.405 |
| B7 | 16252.750 | 2.000 | 489.105 | 489.129 |
| C7 | 16262.750 | 2.000 | 488.805 | 488.853 |
| D7 | 16272.750 | 2.000 | 488.505 | 488.577 |
| E7 | 16282.750 | 2.000 | 488.205 | 488.285 |
| F7 | 16292.750 | 2.000 | 487.905 | 487.989 |
| G7 | 16302.750 | 2.000 | 487.605 | 487.696 |
| H7 | 16312.750 | 2.000 | 487.305 | 487.382 |
| I7 | 16322.750 | 2.000 | 487.005 | 487.069 |
| J7 | 16332.750 | 2.000 | 486.705 | 486.756 |
| K7 | 16342.750 | 2.000 | 486.405 | 486.439 |
| L7 | 16352.750 | 2.000 | 486.105 | 486.122 |
| ℄ Brg. Pier 9 | 16362.750 | 2.000 | 485.805 | 485.805 |
| M7 | 16372.750 | 2.000 | 485.505 | 485.505 |
| N7 | 16382.750 | 2.000 | 485.205 | 485.205 |
| O7 | 16392.750 | 2.000 | 484.905 | 484.905 |
| P7 | 16402.750 | 2.000 | 484.605 | 484.613 |
| Q7 | 16412.750 | 2.000 | 484.305 | 484.321 |
| R7 | 16422.750 | 2.000 | 484.005 | 484.028 |
| S7 | 16432.750 | 2.000 | 483.705 | 483.726 |
| T7 | 16442.750 | 2.000 | 483.405 | 483.423 |
| U7 | 16452.750 | 2.000 | 483.105 | 483.120 |
| V7 | 16462.750 | 2.000 | 482.805 | 482.815 |
| W7 | 16472.750 | 2.000 | 482.505 | 482.510 |
| ℄ Brg. Pier 10 | 16482.750 | 2.000 | 482.205 | 482.205 |
| X7 | 16492.750 | 2.000 | 481.905 | 481.911 |
| Y7 | 16502.750 | 2.000 | 481.605 | 481.616 |
| Z7 | 16512.750 | 2.000 | 481.305 | 481.322 |
| A8 | 16522.750 | 2.000 | 481.005 | 481.024 |
| B8 | 16532.750 | 2.000 | 480.705 | 480.727 |
| C8 | 16542.750 | 2.000 | 480.405 | 480.429 |
| D8 | 16552.750 | 2.000 | 480.105 | 480.122 |
| E8 | 16562.750 | 2.000 | 479.805 | 479.815 |
| F8 | 16572.750 | 2.000 | 479.505 | 479.508 |
| G8 | 16582.750 | 2.000 | 479.205 | 479.207 |
| H8 | 16592.750 | 2.000 | 478.905 | 478.906 |
| ℄ Brg. Pier 11 | 16602.750 | 2.000 | 478.605 | 478.605 |
| I8 | 16612.750 | 2.000 | 478.305 | 478.321 |
| J8 | 16622.750 | 2.000 | 478.005 | 478.037 |
| K8 | 16632.750 | 2.000 | 477.705 | 477.754 |
| L8 | 16642.750 | 2.000 | 477.411 | 477.472 |
| M8 | 16652.750 | 2.000 | 477.123 | 477.197 |
| N8 | 16662.750 | 2.000 | 476.842 | 476.928 |
| O8 | 16672.750 | 2.000 | 476.567 | 476.647 |
| P8 | 16682.750 | 2.000 | 476.298 | 476.373 |
| Q8 | 16692.750 | 2.000 | 476.036 | 476.105 |
| R8 | 16702.750 | 2.000 | 475.781 | 475.827 |
| S8 | 16712.750 | 2.000 | 475.532 | 475.555 |
| ℄ N. Brg. Pier 12 | 16722.750 | 2.000 | 475.289 | 475.289 |
| ℄ S. Brg. Pier 12 | 16724.250 | 2.000 | 475.254 | 475.254 |
| T8 | 16734.250 | 2.000 | 475.019 | 475.040 |
| U8 | 16744.250 | 2.000 | 474.790 | 474.831 |
| V8 | 16754.250 | 2.000 | 474.568 | 474.618 |
| W8 | 16764.250 | 2.000 | 474.353 | 474.406 |
| X8 | 16774.250 | 2.000 | 474.144 | 474.188 |
| Y8 | 16784.250 | 2.000 | 473.942 | 473.970 |
| ℄ Brg. S. Abut. | 16797.250 | 2.000 | 473.688 | 473.688 |
| Back of S. Abut. | 16799.250 | 2.000 | 473.650 | 473.650 |

## BEAM 3 & 6

| Location | Station | Offset | Theoretical Grade Elevations | Theoretical Grade Elevations Adjusted For Dead Load Deflection |
|---|---|---|---|---|
| ℄ S. Brg. Pier 8 | 16242.750 | 10.500 | 489.332 | 489.332 |
| B7 | 16252.750 | 10.500 | 489.032 | 489.056 |
| C7 | 16262.750 | 10.500 | 488.732 | 488.780 |
| D7 | 16272.750 | 10.500 | 488.432 | 488.504 |
| E7 | 16282.750 | 10.500 | 488.132 | 488.210 |
| F7 | 16292.750 | 10.500 | 487.832 | 487.916 |
| G7 | 16302.750 | 10.500 | 487.532 | 487.623 |
| H7 | 16312.750 | 10.500 | 487.232 | 487.309 |
| I7 | 16322.750 | 10.500 | 486.932 | 486.996 |
| J7 | 16332.750 | 10.500 | 486.632 | 486.683 |
| K7 | 16342.750 | 10.500 | 486.332 | 486.366 |
| L7 | 16352.750 | 10.500 | 486.032 | 486.049 |
| ℄ Brg. Pier 9 | 16362.750 | 10.500 | 485.732 | 485.732 |
| M7 | 16372.750 | 10.500 | 485.432 | 485.432 |
| N7 | 16382.750 | 10.500 | 485.132 | 485.132 |
| O7 | 16392.750 | 10.500 | 484.832 | 484.832 |
| P7 | 16402.750 | 10.500 | 484.532 | 484.540 |
| Q7 | 16412.750 | 10.500 | 484.232 | 484.247 |
| R7 | 16422.750 | 10.500 | 483.932 | 483.955 |
| S7 | 16432.750 | 10.500 | 483.632 | 483.652 |
| T7 | 16442.750 | 10.500 | 483.332 | 483.350 |
| U7 | 16452.750 | 10.500 | 483.032 | 483.047 |
| V7 | 16462.750 | 10.500 | 482.732 | 482.742 |
| W7 | 16472.750 | 10.500 | 482.432 | 482.437 |
| ℄ Brg. Pier 10 | 16482.750 | 10.500 | 482.132 | 482.132 |
| X7 | 16492.750 | 10.500 | 481.832 | 481.837 |
| Y7 | 16502.750 | 10.500 | 481.532 | 481.543 |
| Z7 | 16512.750 | 10.500 | 481.232 | 481.249 |
| A8 | 16522.750 | 10.500 | 480.932 | 480.951 |
| B8 | 16532.750 | 10.500 | 480.632 | 480.654 |
| C8 | 16542.750 | 10.500 | 480.332 | 480.356 |
| D8 | 16552.750 | 10.500 | 480.032 | 480.049 |
| E8 | 16562.750 | 10.500 | 479.732 | 479.742 |
| F8 | 16572.750 | 10.500 | 479.432 | 479.435 |
| G8 | 16582.750 | 10.500 | 479.132 | 479.134 |
| H8 | 16592.750 | 10.500 | 478.832 | 478.833 |
| ℄ Brg. Pier 11 | 16602.750 | 10.500 | 478.532 | 478.532 |
| I8 | 16612.750 | 10.500 | 478.232 | 478.248 |
| J8 | 16622.750 | 10.500 | 477.932 | 477.964 |
| K8 | 16632.750 | 10.500 | 477.632 | 477.681 |
| L8 | 16642.750 | 10.500 | 477.338 | 477.399 |
| M8 | 16652.750 | 10.500 | 477.050 | 477.124 |
| N8 | 16662.750 | 10.500 | 476.768 | 476.855 |
| O8 | 16672.750 | 10.500 | 476.493 | 476.574 |
| P8 | 16682.750 | 10.500 | 476.225 | 476.300 |
| Q8 | 16692.750 | 10.500 | 475.963 | 476.032 |
| R8 | 16702.750 | 10.500 | 475.708 | 475.754 |
| S8 | 16712.750 | 10.500 | 475.459 | 475.482 |
| ℄ N. Brg. Pier 12 | 16722.750 | 10.500 | 475.216 | 475.216 |
| ℄ S. Brg. Pier 12 | 16724.250 | 10.500 | 475.181 | 475.181 |
| T8 | 16734.250 | 10.500 | 474.946 | 474.967 |
| U8 | 16744.250 | 10.500 | 474.717 | 474.758 |
| V8 | 16754.250 | 10.500 | 474.495 | 474.545 |
| W8 | 16764.250 | 10.500 | 474.280 | 474.333 |
| X8 | 16774.250 | 10.500 | 474.071 | 474.115 |
| Y8 | 16784.250 | 10.500 | 473.869 | 473.897 |
| ℄ Brg. S. Abut. | 16797.250 | 10.500 | 473.615 | 473.615 |
| Back of S. Abut. | 16799.250 | 10.500 | 473.577 | 473.577 |

## BEAM 2 & 7

| Location | Station | Offset | Theoretical Grade Elevations | Theoretical Grade Elevations Adjusted For Dead Load Deflection |
|---|---|---|---|---|
| ℄ S. Brg. Pier 8 | 16242.750 | 19.000 | 489.259 | 489.259 |
| B7 | 16252.750 | 19.000 | 488.959 | 488.983 |
| C7 | 16262.750 | 19.000 | 488.659 | 488.707 |
| D7 | 16272.750 | 19.000 | 488.359 | 488.430 |
| E7 | 16282.750 | 19.000 | 488.059 | 488.137 |
| F7 | 16292.750 | 19.000 | 487.759 | 487.843 |
| G7 | 16302.750 | 19.000 | 487.459 | 487.550 |
| H7 | 16312.750 | 19.000 | 487.159 | 487.236 |
| I7 | 16322.750 | 19.000 | 486.859 | 486.923 |
| J7 | 16332.750 | 19.000 | 486.559 | 486.610 |
| K7 | 16342.750 | 19.000 | 486.259 | 486.293 |
| L7 | 16352.750 | 19.000 | 485.959 | 485.976 |
| ℄ Brg. Pier 9 | 16362.750 | 19.000 | 485.659 | 485.659 |
| M7 | 16372.750 | 19.000 | 485.359 | 485.359 |
| N7 | 16382.750 | 19.000 | 485.059 | 485.059 |
| O7 | 16392.750 | 19.000 | 484.759 | 484.759 |
| P7 | 16402.750 | 19.000 | 484.459 | 484.467 |
| Q7 | 16412.750 | 19.000 | 484.159 | 484.174 |
| R7 | 16422.750 | 19.000 | 483.859 | 483.882 |
| S7 | 16432.750 | 19.000 | 483.559 | 483.579 |
| T7 | 16442.750 | 19.000 | 483.259 | 483.277 |
| U7 | 16452.750 | 19.000 | 482.959 | 482.974 |
| V7 | 16462.750 | 19.000 | 482.659 | 482.669 |
| W7 | 16472.750 | 19.000 | 482.359 | 482.364 |
| ℄ Brg. Pier 10 | 16482.750 | 19.000 | 482.059 | 482.059 |
| X7 | 16492.750 | 19.000 | 481.759 | 481.764 |
| Y7 | 16502.750 | 19.000 | 481.459 | 481.470 |
| Z7 | 16512.750 | 19.000 | 481.159 | 481.175 |
| A8 | 16522.750 | 19.000 | 480.859 | 480.878 |
| B8 | 16532.750 | 19.000 | 480.559 | 480.580 |
| C8 | 16542.750 | 19.000 | 480.259 | 480.283 |
| D8 | 16552.750 | 19.000 | 479.959 | 479.976 |
| E8 | 16562.750 | 19.000 | 479.659 | 479.669 |
| F8 | 16572.750 | 19.000 | 479.359 | 479.362 |
| G8 | 16582.750 | 19.000 | 479.059 | 479.061 |
| H8 | 16592.750 | 19.000 | 478.759 | 478.760 |
| ℄ Brg. Pier 11 | 16602.750 | 19.000 | 478.459 | 478.459 |
| I8 | 16612.750 | 19.000 | 478.159 | 478.175 |
| J8 | 16622.750 | 19.000 | 477.859 | 477.891 |
| K8 | 16632.750 | 19.000 | 477.559 | 477.608 |
| L8 | 16642.750 | 19.000 | 477.265 | 477.326 |
| M8 | 16652.750 | 19.000 | 476.977 | 477.051 |
| N8 | 16662.750 | 19.000 | 476.695 | 476.732 |
| O8 | 16672.750 | 19.000 | 476.420 | 476.501 |
| P8 | 16682.750 | 19.000 | 476.152 | 476.227 |
| Q8 | 16692.750 | 19.000 | 475.890 | 475.959 |
| R8 | 16702.750 | 19.000 | 475.635 | 475.681 |
| S8 | 16712.750 | 19.000 | 475.386 | 475.409 |
| ℄ N. Brg. Pier 12 | 16722.750 | 19.000 | 475.143 | 475.143 |
| ℄ S. Brg. Pier 12 | 16724.250 | 19.000 | 475.107 | 475.107 |
| T8 | 16734.250 | 19.000 | 474.873 | 474.894 |
| U8 | 16744.250 | 19.000 | 474.644 | 474.685 |
| V8 | 16754.250 | 19.000 | 474.422 | 474.472 |
| W8 | 16764.250 | 19.000 | 474.207 | 474.259 |
| X8 | 16774.250 | 19.000 | 473.998 | 474.041 |
| Y8 | 16784.250 | 19.000 | 473.796 | 473.823 |
| ℄ Brg. S. Abut. | 16797.250 | 19.000 | 473.542 | 473.542 |
| Back of S. Abut. | 16799.250 | 19.000 | 473.504 | 473.504 |

## BEAM 1 & 8

| Location | Station | Offset | Theoretical Grade Elevations | Theoretical Grade Elevations Adjusted For Dead Load Deflection |
|---|---|---|---|---|
| ℄ S. Brg. Pier 8 | 16242.750 | 27.500 | 489.186 | 489.186 |
| B7 | 16252.750 | 27.500 | 488.886 | 488.910 |
| C7 | 16262.750 | 27.500 | 488.586 | 488.633 |
| D7 | 16272.750 | 27.500 | 488.286 | 488.357 |
| E7 | 16282.750 | 27.500 | 487.986 | 488.054 |
| F7 | 16292.750 | 27.500 | 487.686 | 487.770 |
| G7 | 16302.750 | 27.500 | 487.386 | 487.477 |
| H7 | 16312.750 | 27.500 | 487.086 | 487.163 |
| I7 | 16322.750 | 27.500 | 486.786 | 486.850 |
| J7 | 16332.750 | 27.500 | 486.486 | 486.537 |
| K7 | 16342.750 | 27.500 | 486.186 | 486.220 |
| L7 | 16352.750 | 27.500 | 485.886 | 485.903 |
| ℄ Brg. Pier 9 | 16362.750 | 27.500 | 485.586 | 485.586 |
| M7 | 16372.750 | 27.500 | 485.286 | 485.286 |
| N7 | 16382.750 | 27.500 | 484.986 | 484.986 |
| O7 | 16392.750 | 27.500 | 484.686 | 484.686 |
| P7 | 16402.750 | 27.500 | 484.386 | 484.393 |
| Q7 | 16412.750 | 27.500 | 484.086 | 484.101 |
| R7 | 16422.750 | 27.500 | 483.786 | 483.809 |
| S7 | 16432.750 | 27.500 | 483.486 | 483.506 |
| T7 | 16442.750 | 27.500 | 483.186 | 483.203 |
| U7 | 16452.750 | 27.500 | 482.886 | 482.90[illegible] |
| V7 | 16462.750 | 27.500 | 482.586 | 482.596 |
| W7 | 16472.750 | 27.500 | 482.286 | 482.291 |
| ℄ Brg. Pier 10 | 16482.750 | 27.500 | 481.986 | 481.986 |
| X7 | 16492.750 | 27.500 | 481.686 | 481.691 |
| Y7 | 16502.750 | 27.500 | 481.386 | 481.397 |
| Z7 | 16512.750 | 27.500 | 481.086 | 481.102 |
| A8 | 16522.750 | 27.500 | 480.786 | 480.805 |
| B8 | 16532.750 | 27.500 | 480.486 | 480.507 |
| C8 | 16542.750 | 27.500 | 480.186 | 480.210 |
| D8 | 16552.750 | 27.500 | 479.886 | 479.903 |
| E8 | 16562.750 | 27.500 | 479.586 | 479.596 |
| F8 | 16572.750 | 27.500 | 479.286 | 479.289 |
| G8 | 16582.750 | 27.500 | 478.986 | 478.988 |
| H8 | 16592.750 | 27.500 | 478.686 | 478.687 |
| ℄ Brg. Pier 11 | 16602.750 | 27.500 | 478.386 | 478.386 |
| I8 | 16612.750 | 27.500 | 478.086 | 478.102 |
| J8 | 16622.750 | 27.500 | 477.786 | 477.818 |
| K8 | 16632.750 | 27.500 | 477.486 | 477.534 |
| L8 | 16642.750 | 27.500 | 477.192 | 477.253 |
| M8 | 16652.750 | 27.500 | 476.904 | 476.978 |
| N8 | 16662.750 | 27.500 | 476.622 | 476.709 |
| O8 | 16672.750 | 27.500 | 476.347 | 476.428 |
| P8 | 16682.750 | 27.500 | 476.079 | 476.154 |
| Q8 | 16692.750 | 27.500 | 475.817 | 475.886 |
| R8 | 16702.750 | 27.500 | 475.561 | 475.608 |
| S8 | 16712.750 | 27.500 | 475.313 | 475.336 |
| ℄ N. Brg. Pier 12 | 16722.750 | 27.500 | 475.070 | 475.070 |
| ℄ S. Brg. Pier 12 | 16724.250 | 27.500 | 475.034 | 475.034 |
| T8 | 16734.250 | 27.500 | 474.799 | 474.821 |
| U8 | 16744.250 | 27.500 | 474.571 | 474.612 |
| V8 | 16754.250 | 27.500 | 474.349 | 474.399 |
| W8 | 16764.250 | 27.500 | 474.134 | 474.186 |
| X8 | 16774.250 | 27.500 | 473.925 | 473.968 |
| Y8 | 16784.250 | 27.500 | 473.722 | 473.750 |
| ℄ Brg. S. Abut. | 16797.250 | 27.500 | 473.469 | 473.469 |
| Back of S. Abut. | 16799.250 | 27.500 | 473.431 | 473.431 |

DESIGNED Patrick M Patrine
CHECKED A.L. Brown
DRAWN P.S.M.
CHECKED A.L.B.

Dec. 20 1983
Director of Highways

E-S 1-6-82

**DECK ELEVATIONS**
**SOUTH APPROACH SPANS**
**F.A.I. ROUTE 74 SECTION 10D-1**
**PEORIA-TAZEWELL COUNTIES**
**STATION 151+85**

STATE OF ILLINOIS
DEPARTMENT OF TRANSPORTATION

| ROUTE NO. | SECTION | COUNTY | TOTAL SHEETS | SHEET NO. |
|---|---|---|---|---|
| F.A.I. | | | 136 | 41 |

SHEET NO. 12 OF 75 SHEETS

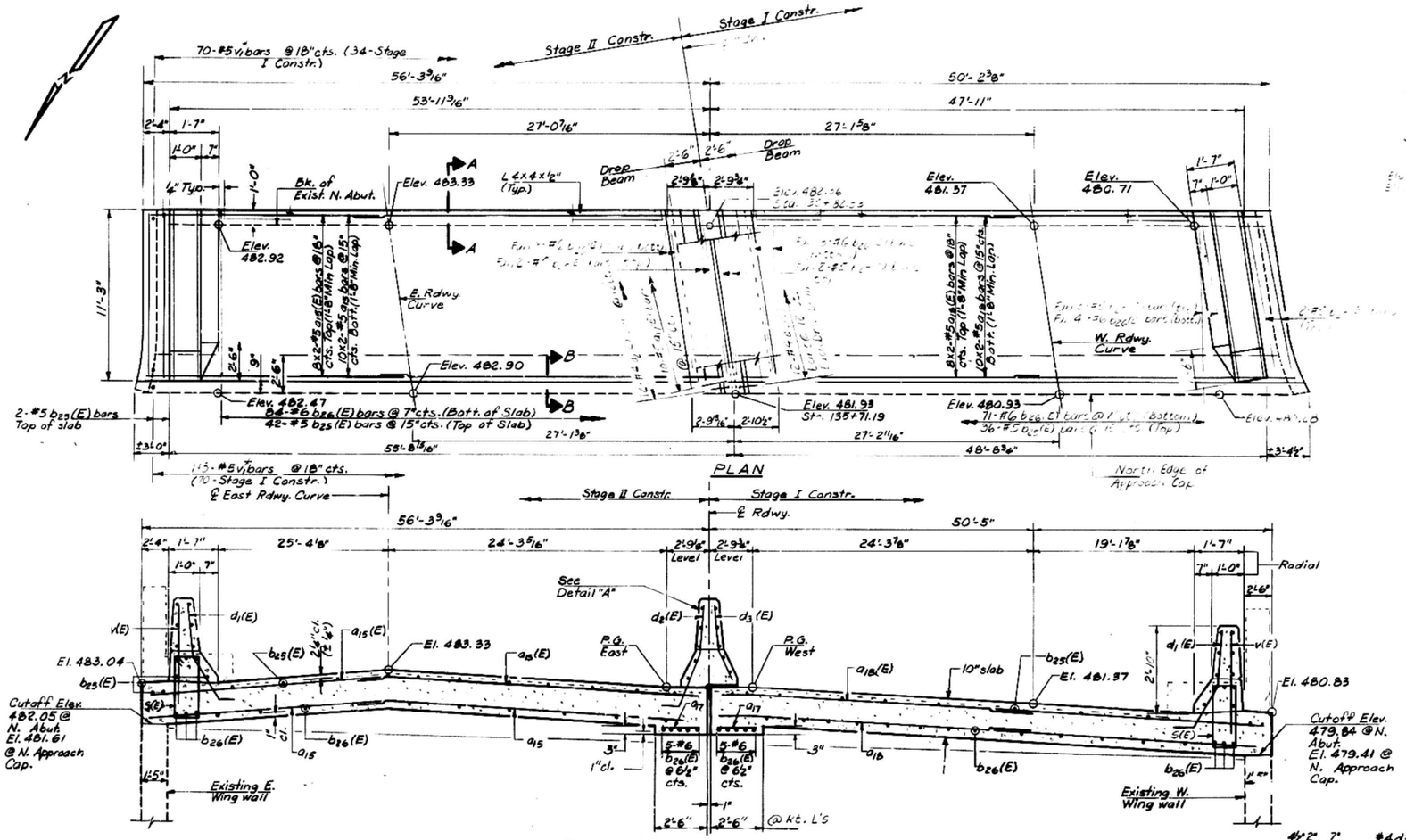


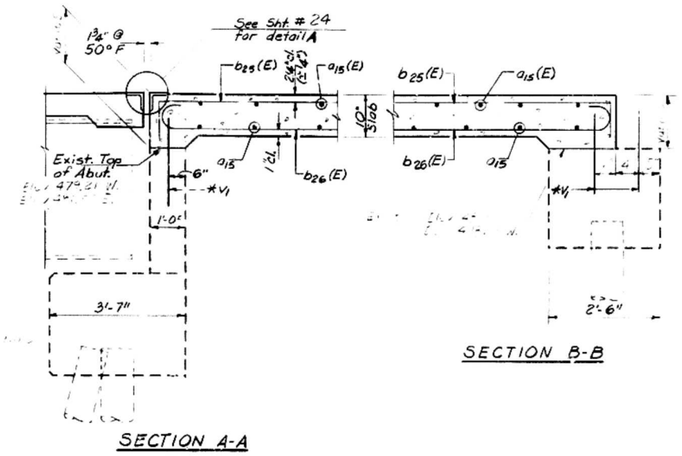





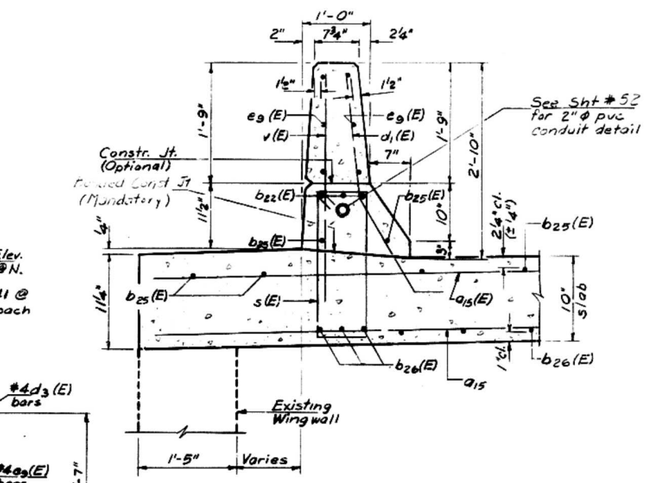


The cost of Polyethylene Bond Breaker, Conc. Jt. Sealer and 1½"□ Compressible Rod under Median shall be incidental to "Class X Concrete."
Hatched areas indicate concrete removal, quantity to be billed with Removal of Existing Concrete Deck.
See Sht. # 13 for bar details and Bill of Material.
Reinforcement Bars designated (E) shall be epoxy coated.
Bars indicated thus 46x2-#5 etc., indicates 46 lines of bars with 2 lengths per line.
* Drill ⅞"ϕ x 1'-0" hole and epoxy grout v1 bars. See Special Provisions for epoxy grout.

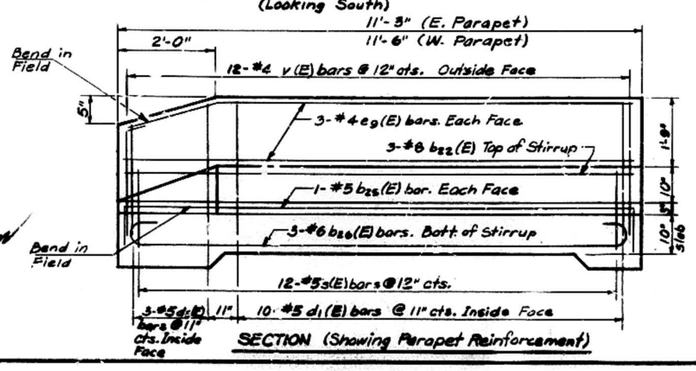


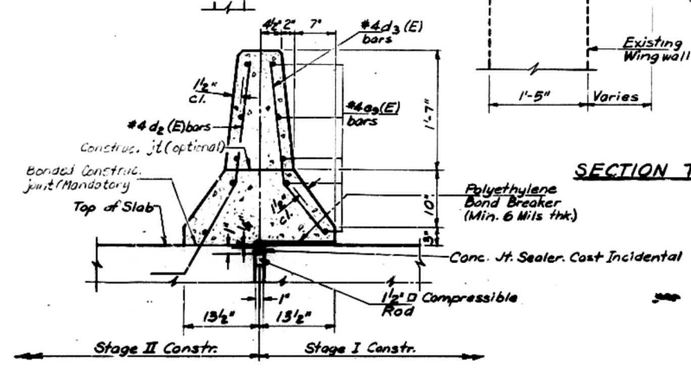


| | |
|---|---|
| DESIGNED | Patrick M. Stone |
| CHECKED | R. L. Brown |
| DRAWN | E. V. Taylor |
| CHECKED | R. L. B. |

Dec. 20 1983
EXAMINER
PASSED
APPROVED

NORTH APPROACH SLAB
F.A.I. RT. 74 SEC. 10D-1
PEORIA-TAZEWELL COUNTIES
STATION 151+85

# STATE OF ILLINOIS
# DEPARTMENT OF TRANSPORTATION

| ROUTE NO. | SECTION | COUNTY | TOTAL SHEETS | SHEET NO. |
|---|---|---|---|---|
| F.A.I. 74 | | | 136 | 48 |

SHEET NO. 13
75 SHEETS

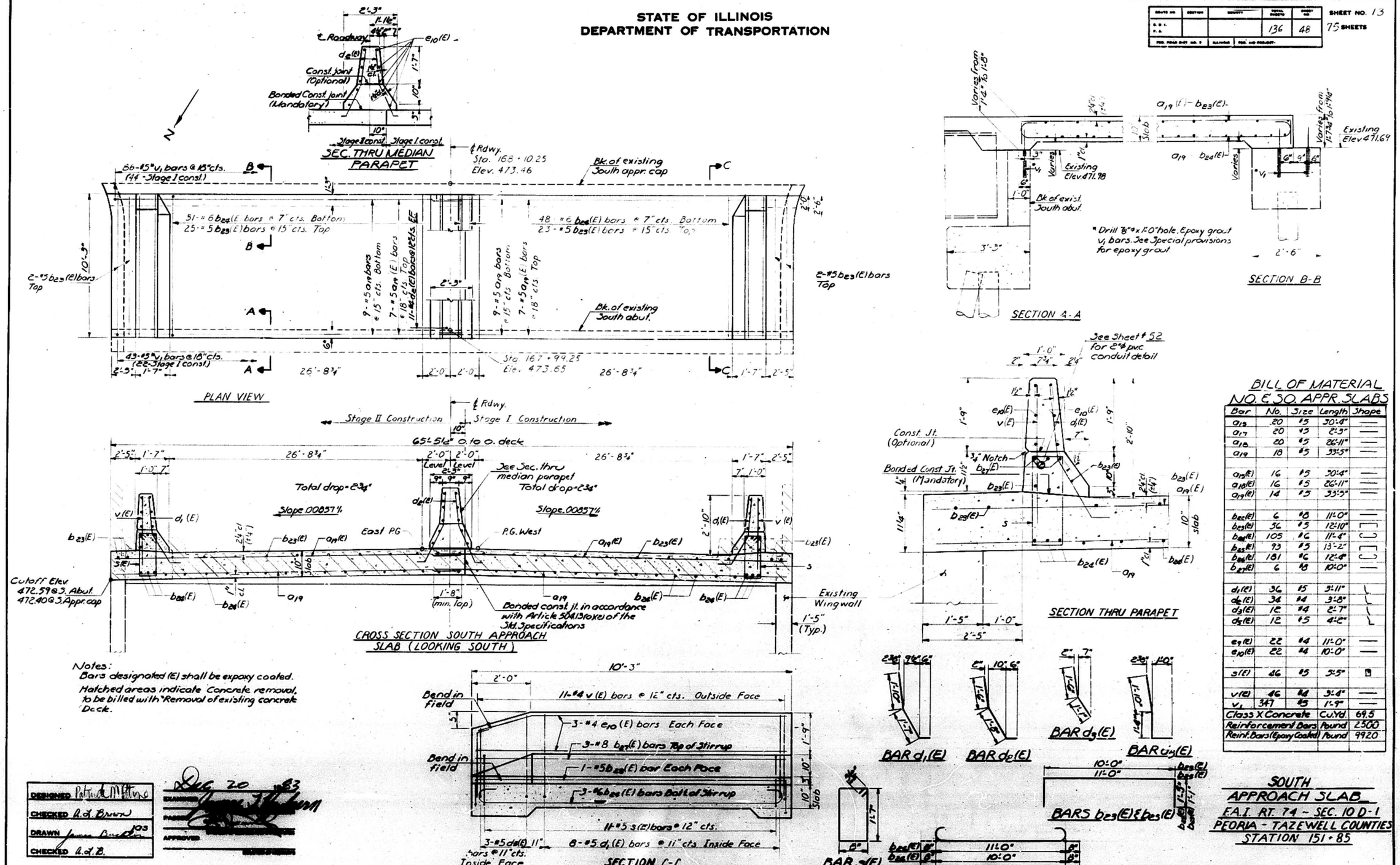


Notes:
Bars designated (E) shall be epoxy coated.
Hatched areas indicate Concrete removal, to be billed with "Removal of existing concrete Deck".

## BILL OF MATERIAL
## NO. E SO. APPR. SLABS

| Bar | No. | Size | Length | Shape |
|---|---|---|---|---|
| $a_{15}$ | 20 | #5 | 30'-8" | — |
| $a_{17}$ | 20 | #5 | 2'-3" | — |
| $a_{18}$ | 20 | #5 | 26'-11" | — |
| $a_{19}$ | 18 | #5 | 33'-5" | — |
| $a_{15}$(E) | 16 | #5 | 30'-8" | — |
| $a_{18}$(E) | 16 | #5 | 26'-11" | — |
| $a_{19}$(E) | 14 | #5 | 33'-5" | — |
| $b_{22}$(E) | 6 | #8 | 11'-0" | — |
| $b_{23}$(E) | 36 | #5 | 12'-10" | ⊓ |
| $b_{24}$(E) | 105 | #6 | 11'-4" | ⊂⊃ |
| $b_{25}$(E) | 93 | #5 | 13'-2" | ⊓ |
| $b_{26}$(E) | 181 | #6 | 12'-4" | ⊂⊃ |
| $b_{27}$(E) | 6 | #8 | 10'-0" | — |
| $d_1$(E) | 36 | #5 | 3'-11" | L |
| $d_2$(E) | 34 | #4 | 3'-8" | L |
| $d_3$(E) | 12 | #4 | 2'-7" | L |
| $d_4$(E) | 12 | #5 | 4'-2" | L |
| $e_9$(E) | 22 | #4 | 11'-0" | — |
| $e_{10}$(E) | 22 | #4 | 10'-0" | — |
| $s$(E) | 46 | #5 | 3'-5" | ▯ |
| $v$(E) | 46 | #4 | 3'-8" | — |
| $v_1$ | 347 | #5 | 1'-9" | — |
| Class X Concrete | | | CU.YD. | 69.5 |
| Reinforcement Bars | | | Pound | 2500 |
| Reinf. Bars (Epoxy Coated) | | | Pound | 9920 |

## SOUTH APPROACH SLAB
F.A.I. RT. 74 - SEC. 10 D-1
PEORIA - TAZEWELL COUNTIES
STATION 151 + 85

DESIGNED Patrick J. McKinney
CHECKED R. J. Brown
DRAWN James Buschbach
CHECKED R. J. B.

Dec. 20 1983

| ROUTE NO. | SECTION | COUNTY | TOTAL SHEETS | SHEET NO. |
|---|---|---|---|---|
| F.A.I. 74 | | | 136 | 49 |
| FED. ROAD DIST. NO. 7 | | ILLINOIS | FED. AID PROJECT- | |

SHEET NO. 12
75 SHEETS

# STATE OF ILLINOIS
# DEPARTMENT OF TRANSPORTATION

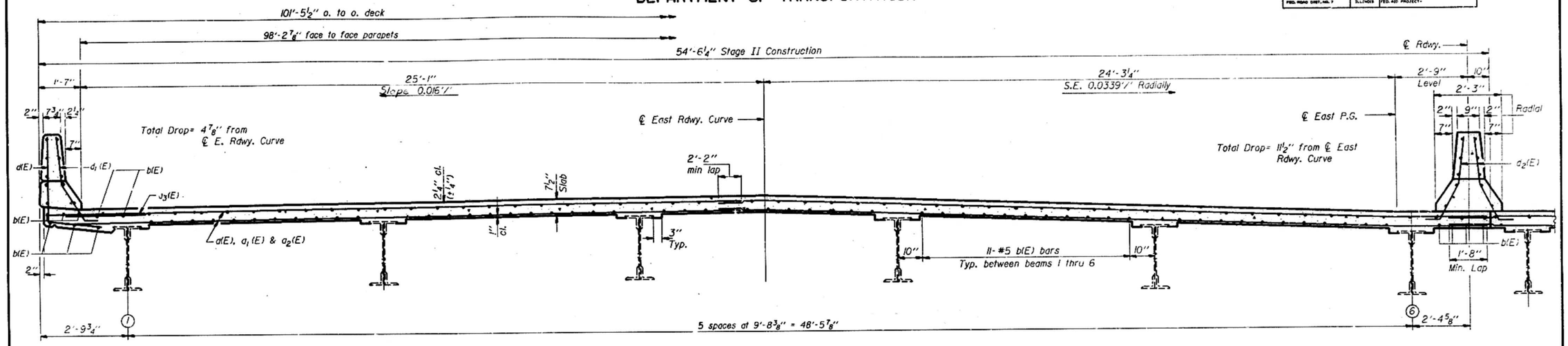


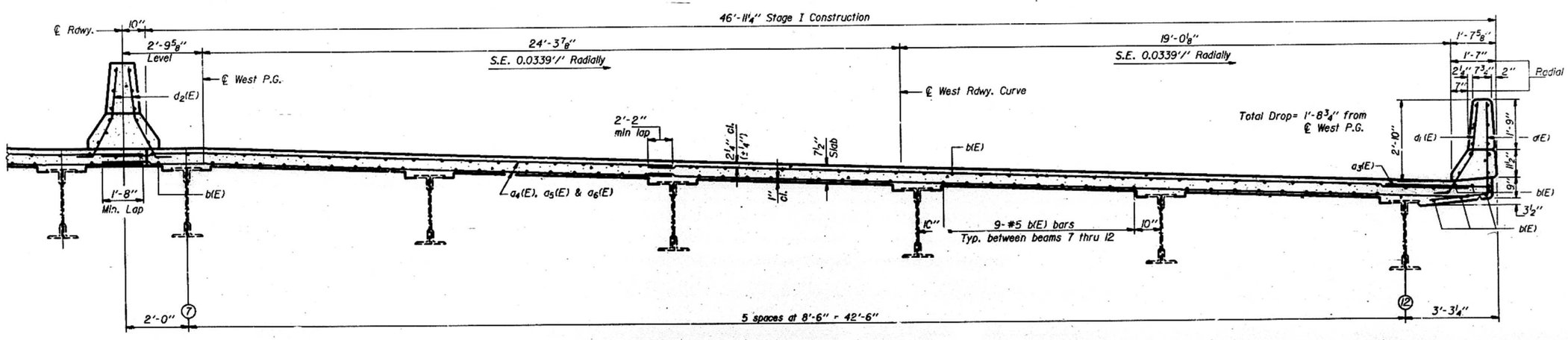


## CROSS SECTION
(Looking South)

All dimensions are along ℄ Brg. N Abut. unless otherwise noted

See Sht. #22 thru 24 for superstructure details and Bill of Material.

| | | |
|---|---|---|
| DESIGNED | Patrick M Stone | |
| CHECKED | R.L. Brown | |
| DRAWN | RPS | JRS |
| CHECKED | R.L.B. | |

Dec. 20 1983
CHAIRMAN
PROJECT ENGINEER
APPROVED
DIRECTOR OF HIGHWAYS

**NORTH APPROACH SUPERSTRUCTURE**
**CROSS SECTION SPAN A**
**F.A.I. RT. 74 SEC. 100-1**
**PEORIA-TAZEWELL COUNTIES**
**STATION 151+85**

| ROUTE NO. | SECTION | COUNTY | TOTAL SHEETS | SHEET NO. |
|---|---|---|---|---|
| F.A.I. | | | 136 | 50 |
| FED. ROAD DIST. NO. 9 | ILLINOIS | FED. A/D PROJECT- | | |

SHEET NO. 15
75 SHEETS

STATE OF ILLINOIS
DEPARTMENT OF TRANSPORTATION

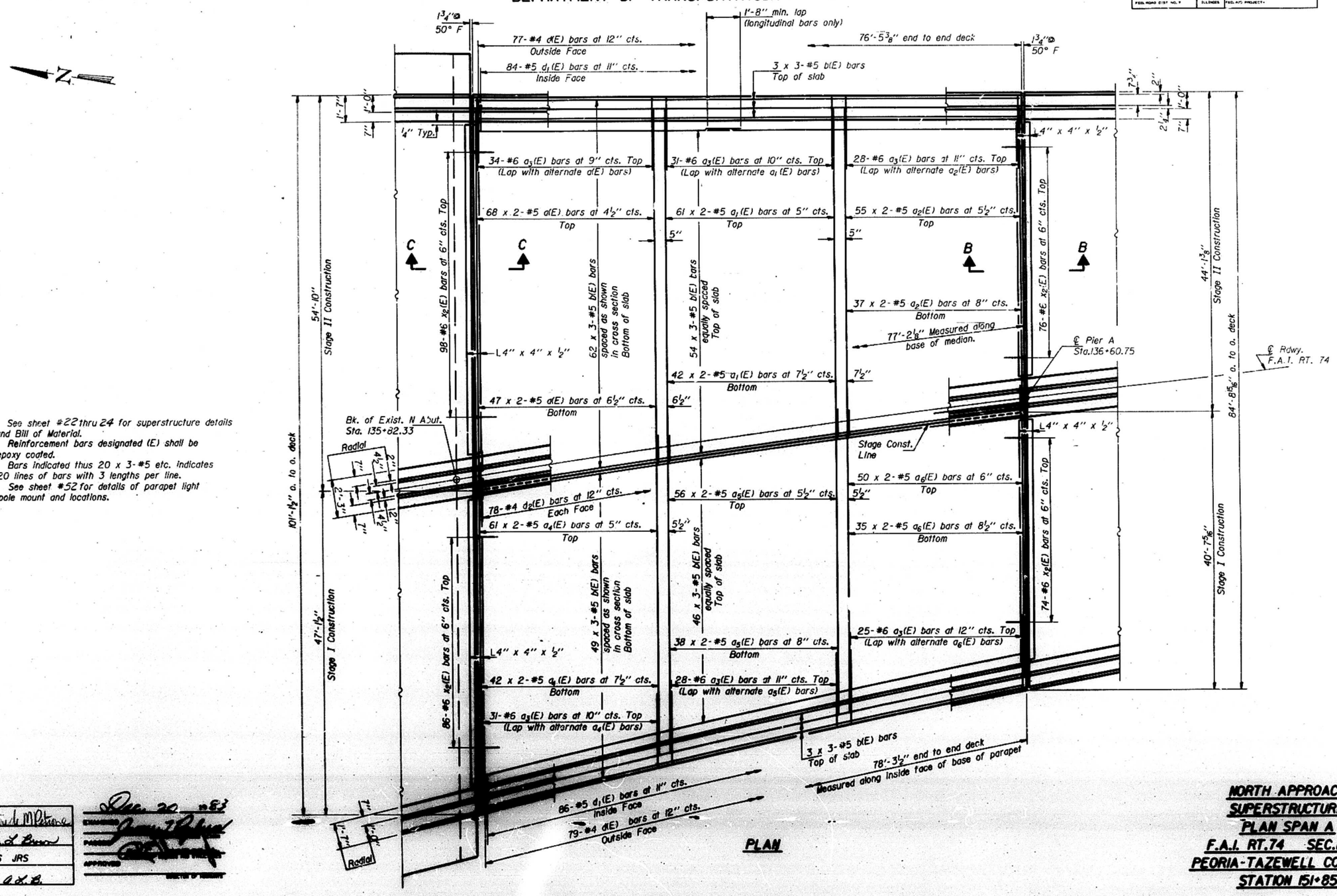


Notes: See sheet #22 thru 24 for superstructure details and Bill of Material.
Reinforcement bars designated (E) shall be epoxy coated.
Bars indicated thus 20 x 3-#5 etc. indicates 20 lines of bars with 3 lengths per line.
See sheet #52 for details of parapet light pole mount and locations.

PLAN

| | |
|---|---|
| DESIGNED | Patricia M. Petrone |
| CHECKED | A. L. Brown |
| DRAWN | RPS JRS |
| CHECKED | A.L.B. |

Dec. 20 1983

NORTH APPROACH
SUPERSTRUCTURE
PLAN SPAN A
F.A.I. RT. 74 SEC. 10D-1
PEORIA-TAZEWELL COUNTIES
STATION 151+85

| ROUTE NO. | SECTION | COUNTY | TOTAL SHEETS | SHEET NO. |
|---|---|---|---|---|
| S.B.I. F.A. | | | 136 | 51 |
| FED.-ROAD DIST. NO. 7 | S.H.P. 88 | FED. AID PROJECT- | | |

SHEET NO. 16
75 SHEETS

# STATE OF ILLINOIS
# DEPARTMENT OF TRANSPORTATION

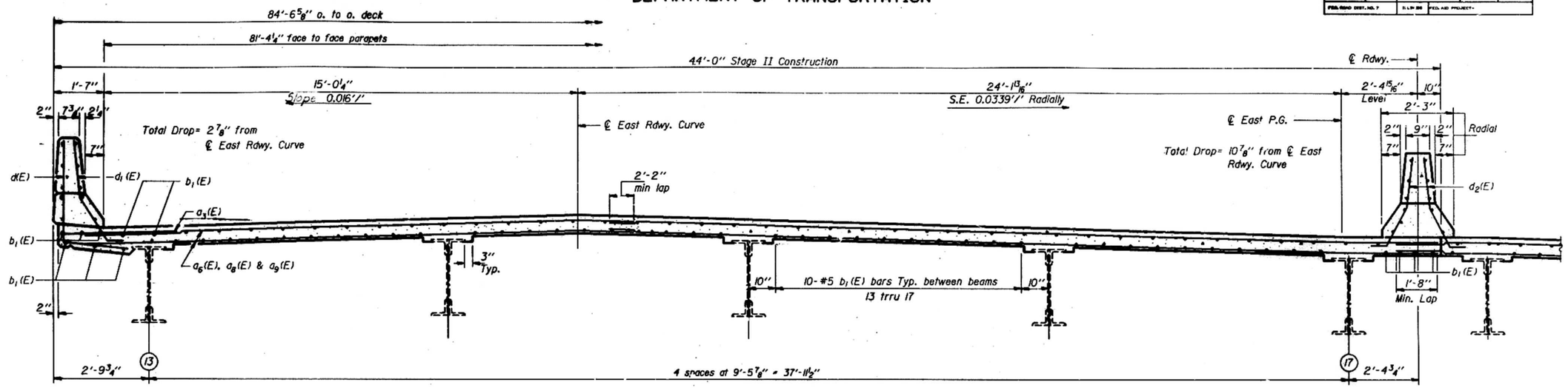


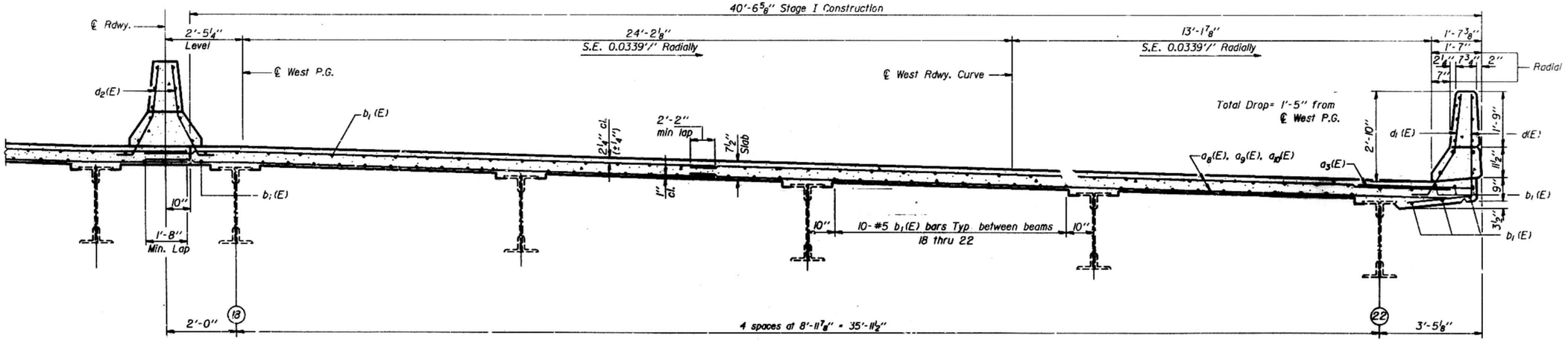


## CROSS SECTION
(Looking South)

All dimensions are along ℄ Brg.
Pier A (Span 1) unless otherwise noted

See Sht. #22 thru 24 for superstructure details and Bill of Material.

| | |
|---|---|
| DESIGNED | Patrick McPatrick |
| CHECKED | A.L. Brown |
| DRAWN | RPS JRS |
| CHECKED | A.L.B. |

Dec. 20 1953
EXAMINED
PASSED
APPROVED
DIRECTOR OF HIGHWAYS

**NORTH APPROACH**
**SUPERSTRUCTURE**
**CROSS SECTION SPAN 1**
**F.A.I. RT.74 SEC.10D-1**
**PEORIA-TAZEWELL COUNTIES**
**STATION 151+85**

STATE OF ILLINOIS
DEPARTMENT OF TRANSPORTATION

| ROUTE NO. | SECTION | COUNTY | TOTAL SHEETS | SHEET NO. |
|---|---|---|---|---|
| S.B.I. F.A. | | | 136 | 52 |
| FED. ROAD DIST. NO. 7 | | ILLINOIS | FED. AID PROJECT- | |

SHEET NO. 17
75 SHEETS

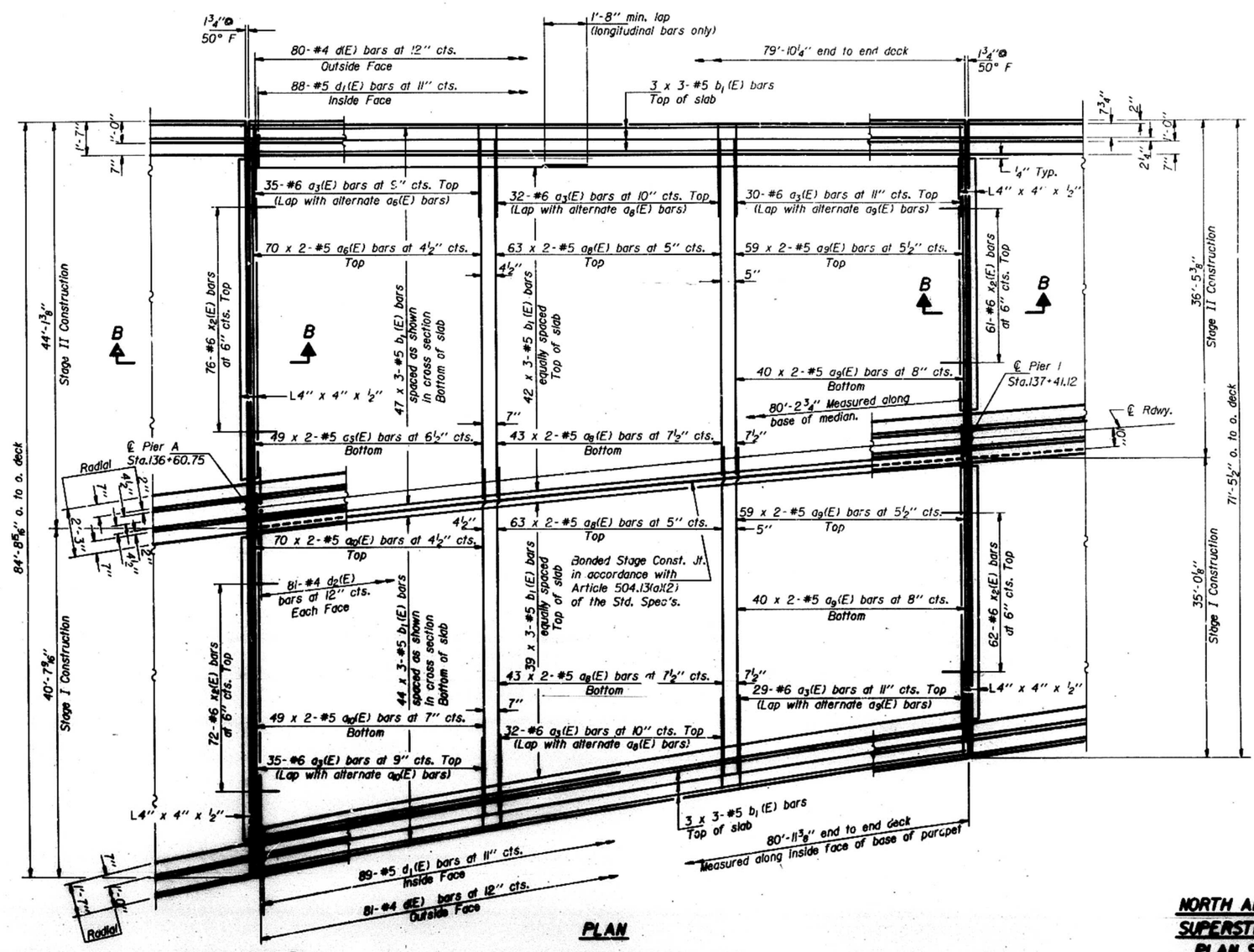


Notes: See sheet #22 thru 24 for superstructure details and Bill of Material.
Reinforcement bars designated (E) shall be epoxy coated.
Bars indicated thus 20 x 3-#5 etc. indicates 20 lines of bars with 3 lengths per line.
See sheet #52 for details of parapet light pole mount and locations.

PLAN

| | |
|---|---|
| DESIGNED | Patrick M Petrine |
| CHECKED | R.A. Brunner |
| DRAWN | RPS JRS |
| CHECKED | R.A.B. |

Dec. 20 1983
ENGINEER OF BRIDGES AND STRUCTURES
APPROVED
DIRECTOR OF HIGHWAYS

NORTH APPROACH
SUPERSTRUCTURE
PLAN SPAN 1
F.A.I. RT. 74 SEC. 100-1
PEORIA-TAZEWELL COUNTIES
STATION 151+85

| ROUTE NO. | SECTION | COUNTY | TOTAL SHEETS | SHEET NO. |
|---|---|---|---|---|
| F.A.I. | | | 136 | 53 |
| FED. ROAD DIST. NO. 7 | | ILLINOIS | FED. AID PROJECT- | |

SHEET NO. 18
75 SHEETS

# STATE OF ILLINOIS
# DEPARTMENT OF TRANSPORTATION

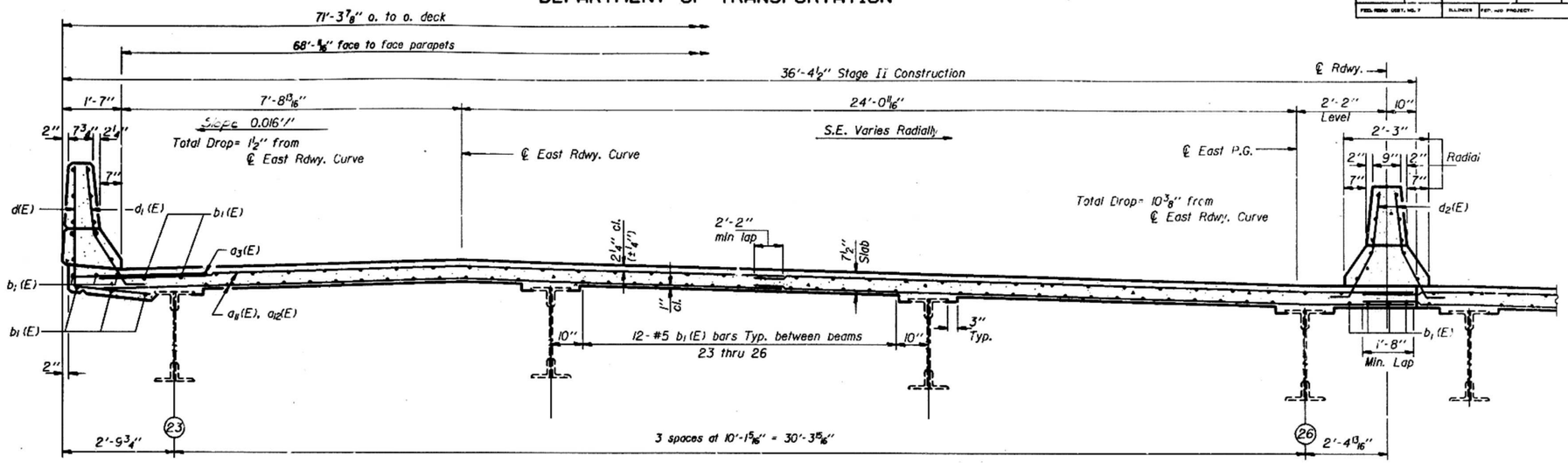


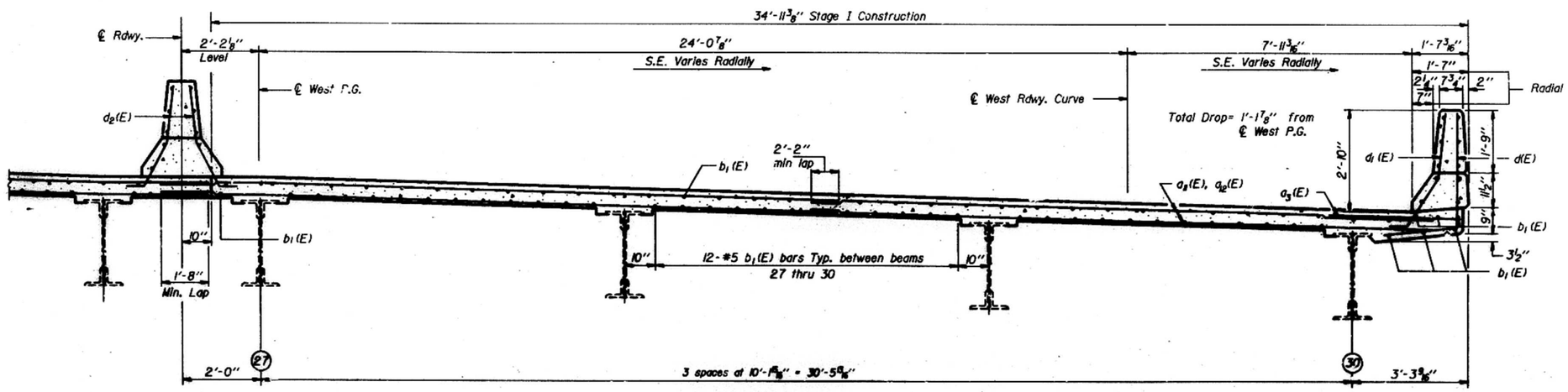


## CROSS SECTION
(Looking South)

All dimensions are along ℄ Brg. Pier 1 (Span 2) unless otherwise noted

See Sht. #22 thru 24 for superstructure details and Bill of Material.

| | |
|---|---|
| DESIGNED | Patricia M. Petrone |
| CHECKED | R. L. Brown |
| DRAWN | RPS JRS |
| CHECKED | R. L. B. |

Dec. 20 1983

**NORTH APPROACH SUPERSTRUCTURE CROSS SECTION SPAN 2**
**F.A.I. RT. 74 SEC. 100-1**
**PEORIA-TAZEWELL COUNTIES**
**STATION 151+85**

STATE OF ILLINOIS
DEPARTMENT OF TRANSPORTATION

| ROUTE NO. | SECTION | COUNTY | TOTAL SHEETS | SHEET NO. |
|---|---|---|---|---|
| F.A.I. 74 | | | 136 | 54 |
| FED. ROAD DIST. NO. 7 | | ILLINOIS | FED. AID PROJECT- | |

SHEET NO. 19
75 SHEETS

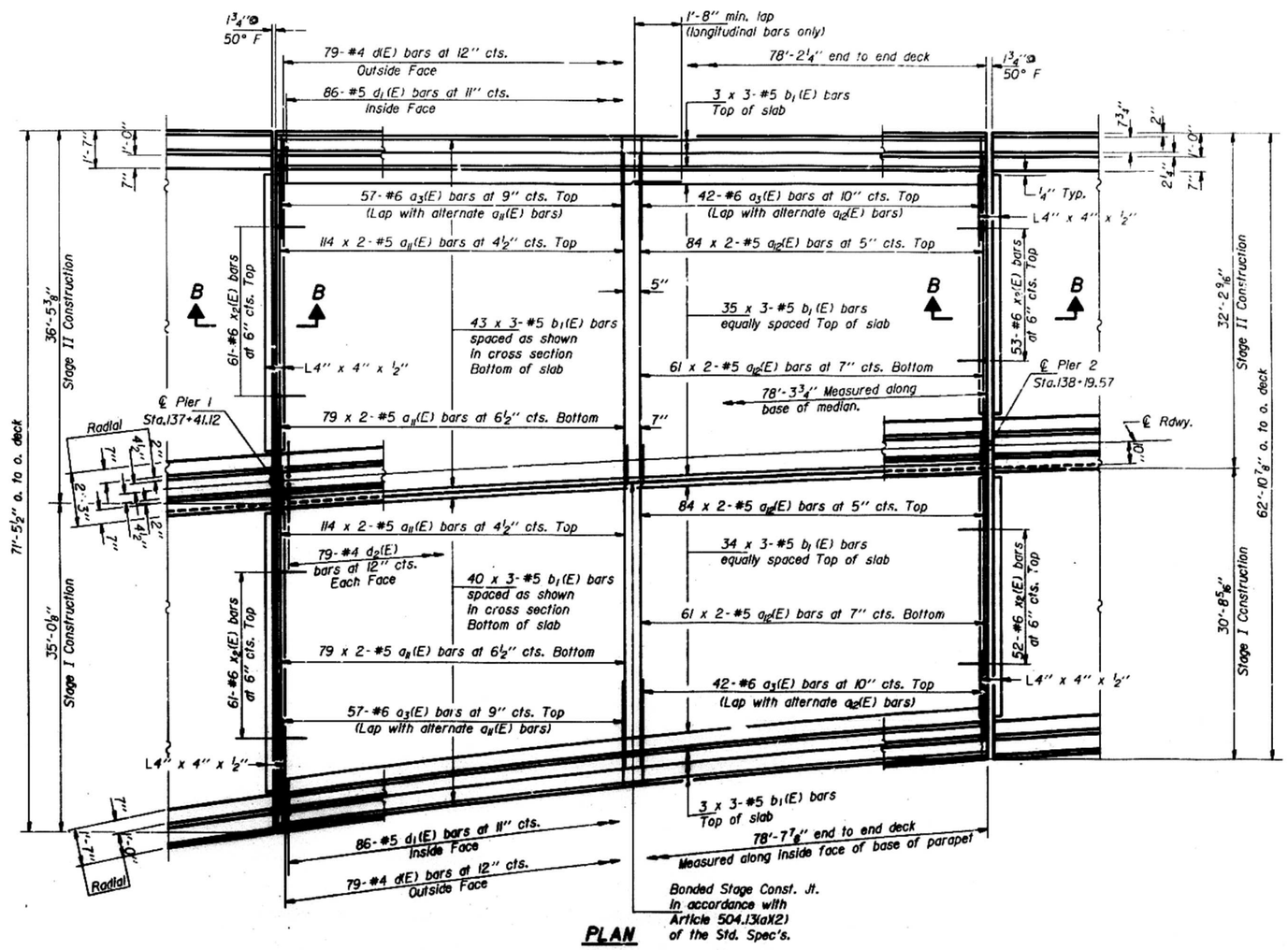


PLAN

Notes: See sheet # 22 thru 24 for superstructure details and Bill of Material.
Reinforcement bars designated (E) shall be epoxy coated.
Bars indicated thus 20 x 3-#5 etc. indicates 20 lines of bars with 3 lengths per line.

| | |
|---|---|
| DESIGNED | Patricia M Petrie |
| CHECKED | A.H. Brown |
| DRAWN | RPS JRS |
| CHECKED | A.H.B. |

Dec. 20 1983

**NORTH APPROACH SUPERSTRUCTURE PLAN SPAN 2**
**F.A.I. RT. 74 SEC. 100-1**
**PEORIA-TAZEWELL COUNTIES**
**STATION 151+85**

| ROUTE NO. | SECTION | COUNTY | TOTAL SHEETS | SHEET NO. |
|---|---|---|---|---|
| S.B.I.R. F.A. | | | 136 | 55 |
| FED. ROAD DIST. NO. 7 | ILLINOIS | FED. AID PROJECT- | | |

SHEET NO. 55
75 SHEETS

# STATE OF ILLINOIS
# DEPARTMENT OF TRANSPORTATION

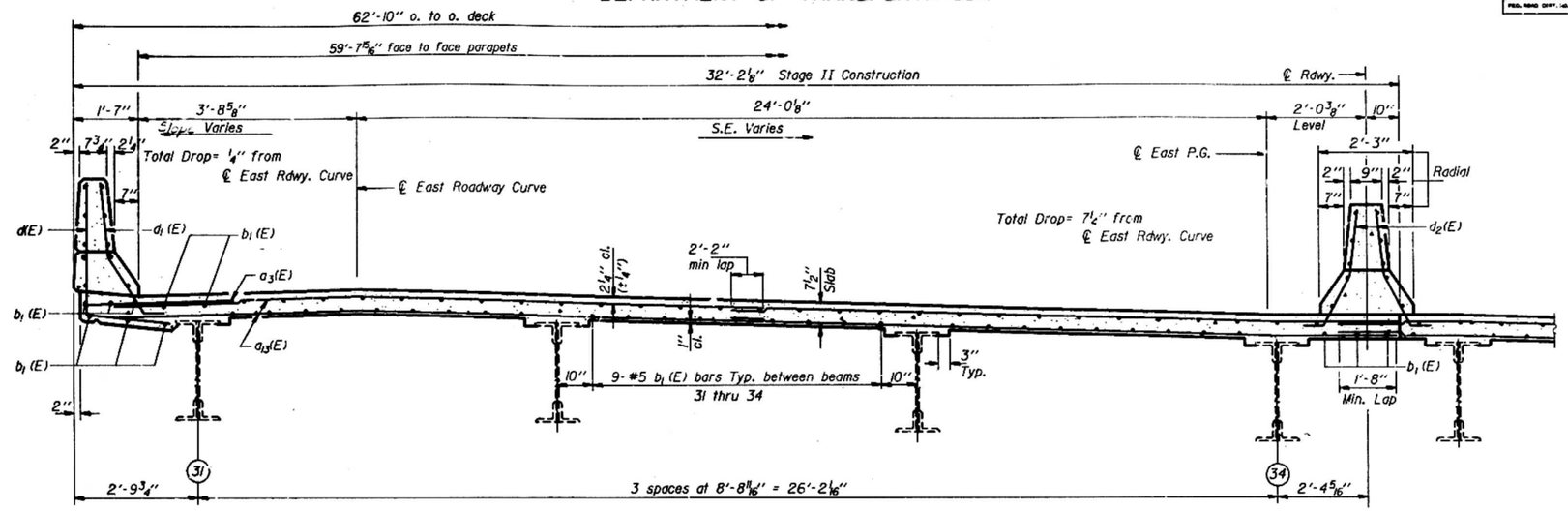


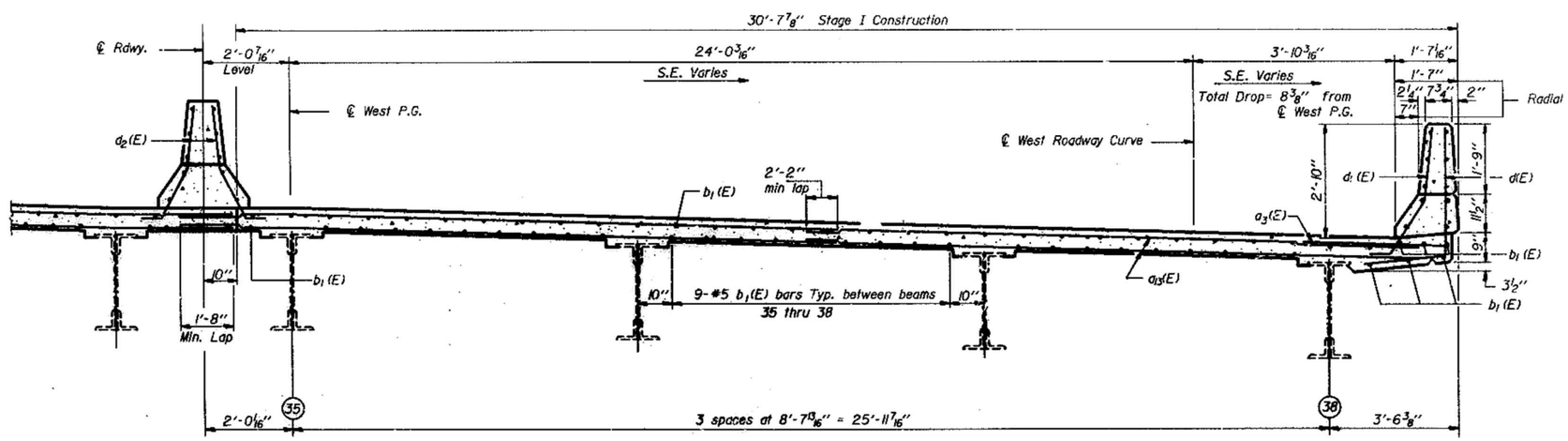


## CROSS SECTION
(Looking South)

All dimensions are along ℄ Brg. Pier 2 (Span 3) unless otherwise noted

See Sht. #22 thru 24 for superstructure details and Bill of Material.

| | |
|---|---|
| DESIGNED | Patrick M Peterson |
| CHECKED | R.L. Brown |
| DRAWN | RPS JRS |
| CHECKED | R.L.B. |

Dec. 20 1983

DIRECTOR OF HIGHWAYS

**NORTH APPROACH SUPERSTRUCTURE CROSS SECTION SPAN 3**
**F.A.I. RT. 74 SEC. 100-1**
**PEORIA-TAZEWELL COUNTIES**
**STATION 151+85**

STATE OF ILLINOIS
DEPARTMENT OF TRANSPORTATION

| ROUTE NO. | SECTION | COUNTY | TOTAL SHEETS | SHEET NO. |
|---|---|---|---|---|
| F.A.I. | | | 136 | 56 |
| FED. ROAD DIST. NO. 7 | | ILLINOIS | FED. AID PROJECT- | |

SHEET NO. 56
75 SHEETS

Notes: See sheet #22 thru 24 for superstructure details and Bill of Material.
Reinforcement bars designated (E) shall be epoxy coated.
Bars indicated thus 20 x 3-#5 etc. indicates 20 lines of bars with 3 lengths per line.
See sheet #52 for details of parapet light pole mount and locations.

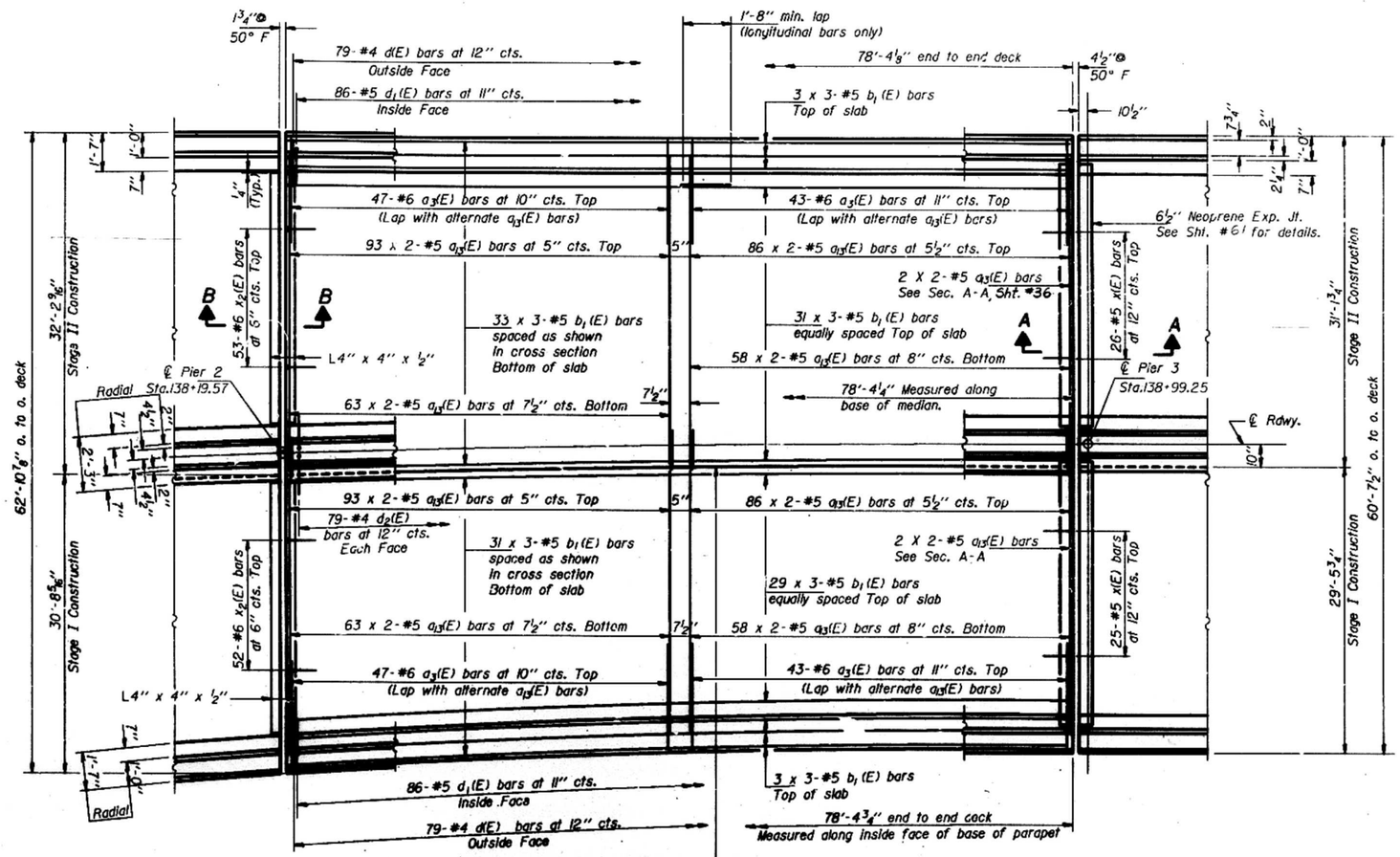


PLAN

Bonded Stage Const. Jt. in accordance with Article 504.13(a)(2) of the Std. Spec's.

| | |
|---|---|
| DESIGNED | Patrick M. Petrone |
| CHECKED | A.L. Brown |
| DRAWN | RPS JRS |
| CHECKED | A.H.E. |

Dec. 20 1983
ENGINEER
PROJECT ENGINEER
APPROVED
DIRECTOR OF HIGHWAYS

NORTH APPROACH
SUPERSTRUCTURE
PLAN SPAN 3
F.A.I. RT. 74 SEC. 100-1
PEORIA-TAZEWELL COUNTIES
STATION 151+85

STATE OF ILLINOIS
DEPARTMENT OF TRANSPORTATION

| ROUTE NO. | SECTION | COUNTY | TOTAL SHEETS | SHEET NO. |
|---|---|---|---|---|
| F.A.I. | | | 136 | 57 |

SHEET NO. 22
75 SHEETS

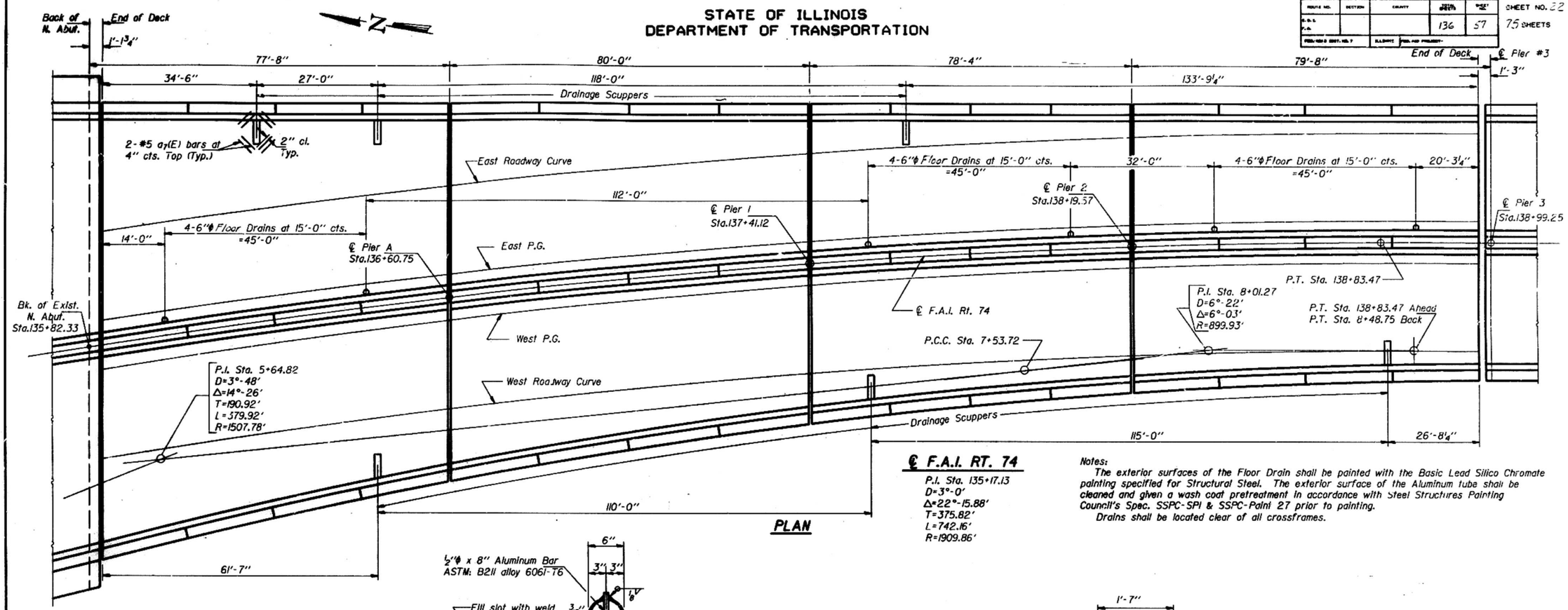


PLAN

## ℄ F.A.I. RT. 74

P.I. Sta. 135+17.13
D=3°-0'
Δ=22°-15.88'
T=375.82'
L=742.16'
R=1909.86'

Notes:
The exterior surfaces of the Floor Drain shall be painted with the Basic Lead Silico Chromate painting specified for Structural Steel. The exterior surface of the Aluminum tube shall be cleaned and given a wash coat pretreatment in accordance with Steel Structures Painting Council's Spec. SSPC-SP1 & SSPC-Paint 27 prior to painting.
Drains shall be located clear of all crossframes.

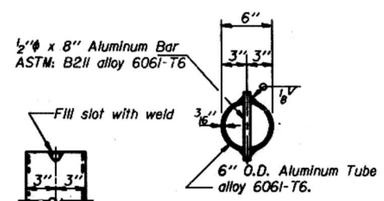


ALUMINUM TUBE

TOP PLAN

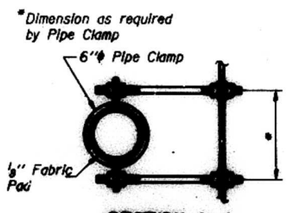


SECTION A-A

TOP PLAN

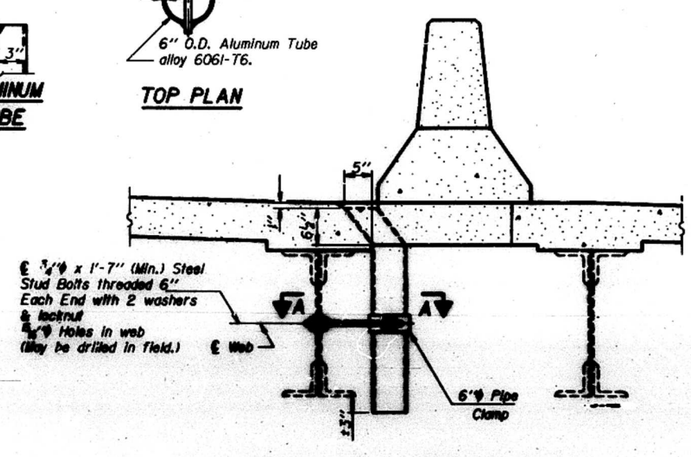


SECTION THRU MEDIAN PARAPET

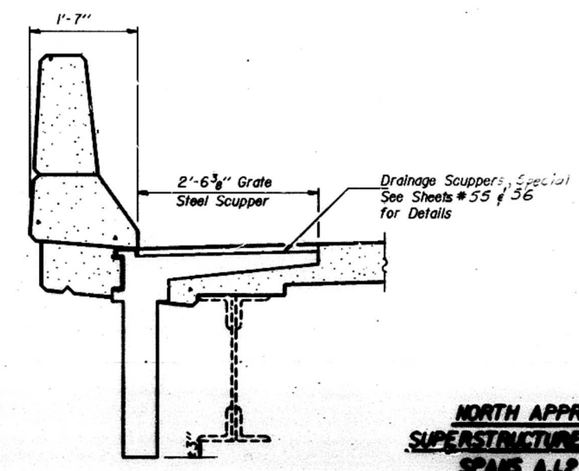


SECTION THRU PARAPET

| | |
|---|---|
| DESIGNED | Patricia M. Petrine |
| CHECKED | A.L. Brown |
| DRAWN | R.P.S. JRS |
| CHECKED | A.L.B. |

Rev. 2-1-83

NORTH APPROACH
SUPERSTRUCTURE DETAILS
SPANS 1, 2 & 3
F.A.I. RT. 74 SEC. 100D-1
PEORIA-TAZEWELL COUNTIES
STATION 151+85

STATE OF ILLINOIS
DEPARTMENT OF TRANSPORTATION

| | | | | | |
|---|---|---|---|---|---|
| | | | | | SHEET NO. 23 |
| | | | 130 | 58 | 75 SHEETS |

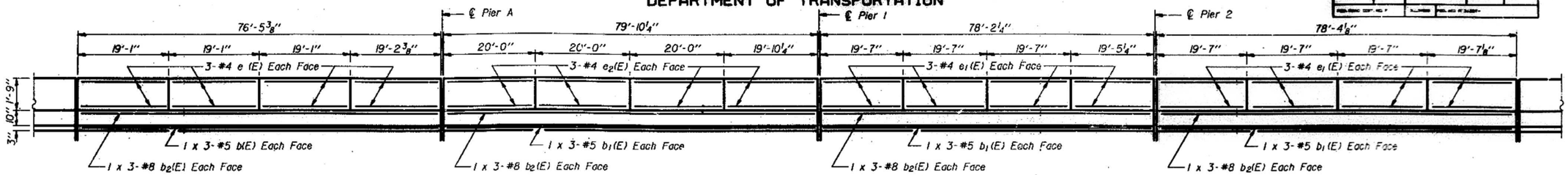


## ELEVATION OF EAST PARAPET
(LOOKING EAST)

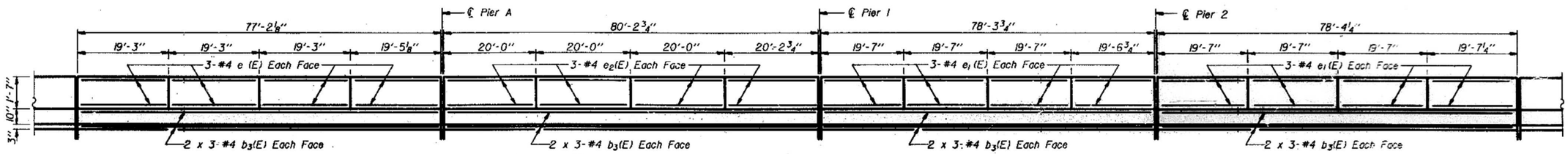


## ELEVATION OF MEDIAN PARAPET
(LOOKING EAST)

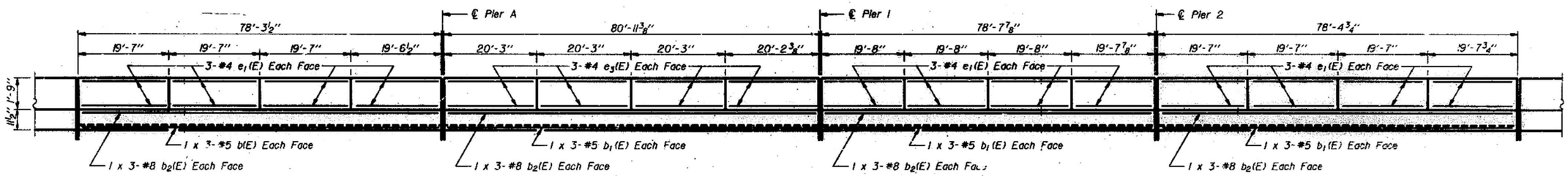


## ELEVATION OF WEST PARAPET
(LOOKING EAST)

Notes: See Sheet #24 for Bill of Material and Section Thru Median Parapet or Parapet showing reinforcement.
Min. Lap: #5 bars 1'-7"
#8 bars 2'-6"
#4 bars 1'-3"

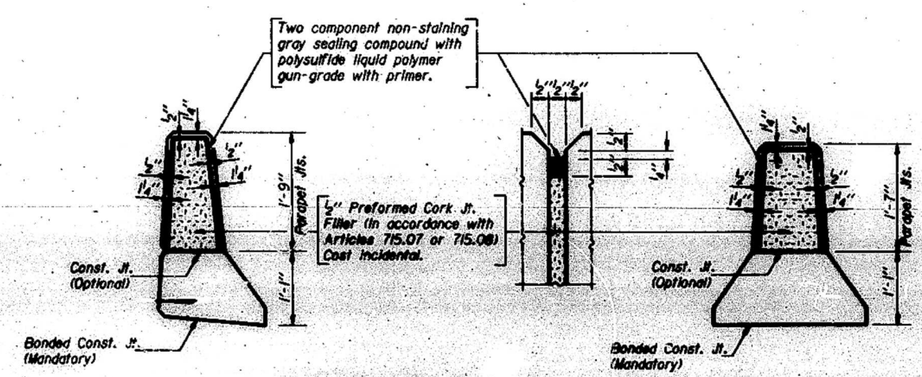


## PARAPET JOINT DETAILS

| | |
|---|---|
| DESIGNED | Patrick McPhine |
| CHECKED | A. J. Brown |
| DRAWN | R. P. Summer |
| CHECKED | A. J. B. |

Date: 20 1963

**NORTH APPROACH**
**SUPERSTRUCTURE DETAILS**
**SPANS 1, 2 & 3**
**F.A.I. RT. 74 SEC. 100-1**
**PEORIA-TAZEWELL COUNTIES**
**STATION 61+85**

STATE OF ILLINOIS
DEPARTMENT OF TRANSPORTATION

| | | | | | |
|---|---|---|---|---|---|
| F.A.P. RTE. | SECTION | COUNTY | TOTAL SHEETS | SHEET | SHEET NO. 24 |
| S.B.I. | | | 136 | 59 | 75 SHEETS |
| F.A.I. | | | | | |
| FED. ROAD DIST. NO. 7 | ILLINOIS | FED. AID PROJECT- | | | |

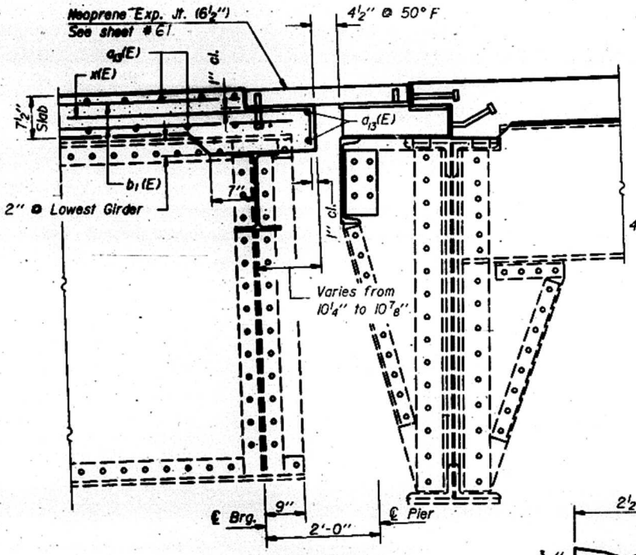


SECTION A-A

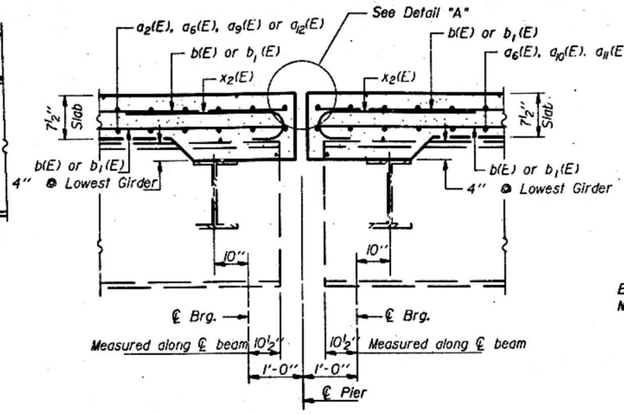


SECTION B-B

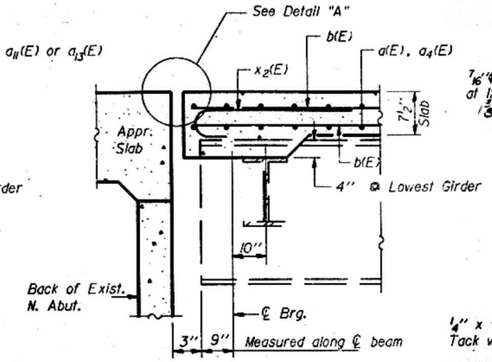


SECTION C-C

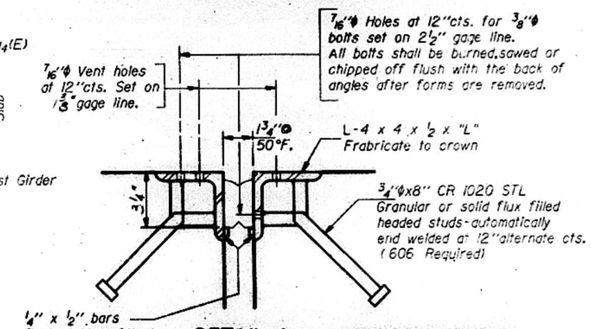


DETAIL A

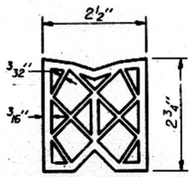


PREFORMED JOINT SEAL (2½")

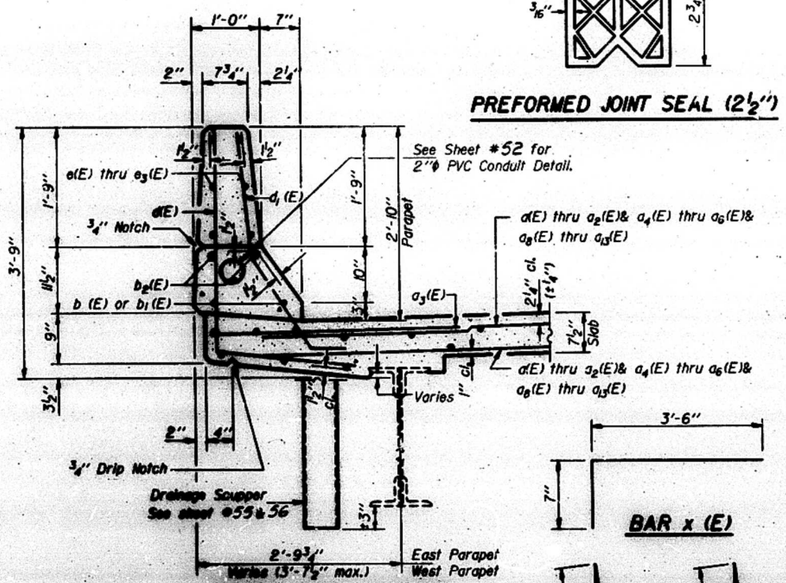


SECTION THRU PARAPET

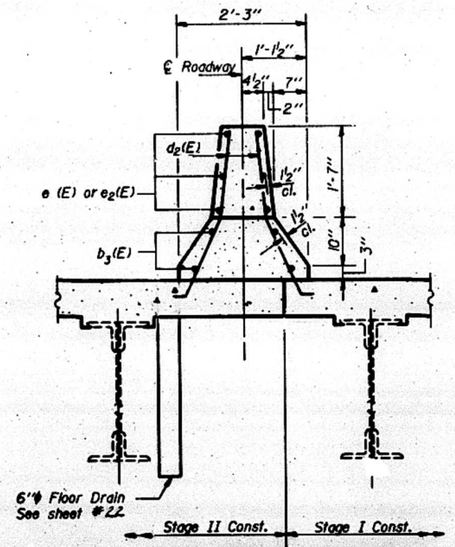


SECTION THRU MEDIAN

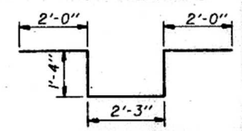


BAR $d_8$(E)

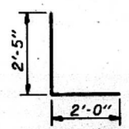


BAR $d_7$(E)




BAR x (E)

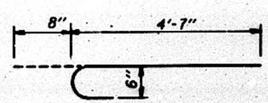


BAR $x_2$(E)

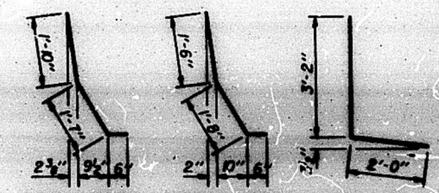


BAR $d_1$(E) BAR $d_2$(E) BAR d(E)

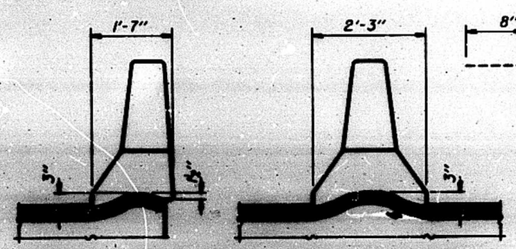


TYPICAL END OF SEAL & MEDIAN TREATMENTS

TABLE OF 7" OVERHEIGHT

| Location | Stage I | Stage II |
|---|---|---|
| N. Abutment | 45'-2" | 51'-2 7/8" |
| Pier A | 38'-8¼" | 40'-6⅜" |
| Pier 1 | 33'-1" | 32'-10¼" |
| Pier 2 | 28' 9¼" | 28'-7½" |

SUPERSTRUCTURE BILL OF MATERIAL

| Bar | No. | Size | Length | Shape |
|---|---|---|---|---|
| a(E) | 230 | #5 | 28'-4" | |
| $a_1$(E) | 206 | #5 | 26'-7" | |
| $a_2$(E) | 184 | #5 | 24'-10" | |
| $a_3$(E) | 788 | #6 | 4'-6" | |
| $a_4$(E) | 206 | #5 | 25'-4" | |
| $a_5$(E) | 188 | #5 | 24'-4" | |
| $a_6$(E) | 408 | #5 | 23'-4" | |
| $a_7$(E) | 48 | #5 | 2'-0" | |
| $a_8$(E) | 424 | #5 | 21'-3" | |
| $a_9$(E) | 396 | #5 | 20'-0" | |
| $a_{10}$(E) | 238 | #5 | 21'-9" | |
| $a_{11}$(E) | 772 | #5 | 19'-0" | |
| $a_{12}$(E) | 580 | #5 | 18'-0" | |
| $a_{13}$(E) | 1208 | #5 | 17'-0" | |
| | | | | |
| b(E) | 663 | #5 | 27'-3" | |
| $b_1$(E) | 1434 | #5 | 28'-3" | |
| $b_2$(E) | 48 | #8 | 28'-8" | |
| $b_3$(E) | 48 | #4 | 27'-7" | |
| | | | | |
| d(E) | 633 | #4 | 5'-2" | |
| $d_1$(E) | 691 | #5 | 3'-11" | |
| $d_2$(E) | 634 | #4 | 3'-8" | |
| $d_7$(E) | 9 | #6 | 4'-5" | |
| $d_8$(E) | 15 | #6 | 8'-11" | |
| | | | | |
| e(E) | 48 | #4 | 18'-10" | |
| $e_1$(E) | 168 | #4 | 19'-3" | |
| $e_2$(E) | 48 | #4 | 19'-8" | |
| $e_3$(E) | 24 | #4 | 20'-0" | |
| | | | | |
| x(E) | 51 | #5 | 4'-1" | |
| $x_2$(E) | 937 | #6 | 5'-3" | |
| Reinforcement Bars (Epoxy Coated) | | | Lbs. | 197,300 |
| Class X Concrete | | | Cu. Yds. | 678.0 |
| | | | | |

Reinforcement bars designated (E) shall be epoxy coated.

For placement of $d_7$(E) and $d_8$(E) bars See sheet #52

SUPERSTRUCTURE DETAILS
NORTH APPROACH
F.A.I. RT. 74 SEC. 100-1
PEORIA-TAZEWELL COUNTIES
STA. 151+85

STATE OF ILLINOIS
DEPARTMENT OF TRANSPORTATION

| ROUTE NO. | SECTION | COUNTY | TOTAL SHEETS | SHEET NO. |
|---|---|---|---|---|
| F.A.I. | | | 136 | 60 |
| FED. ROAD DIST. NO. 7 | | ILLINOIS | FED. AID PROJECT- | |

SHEET NO. 25
75 SHEETS

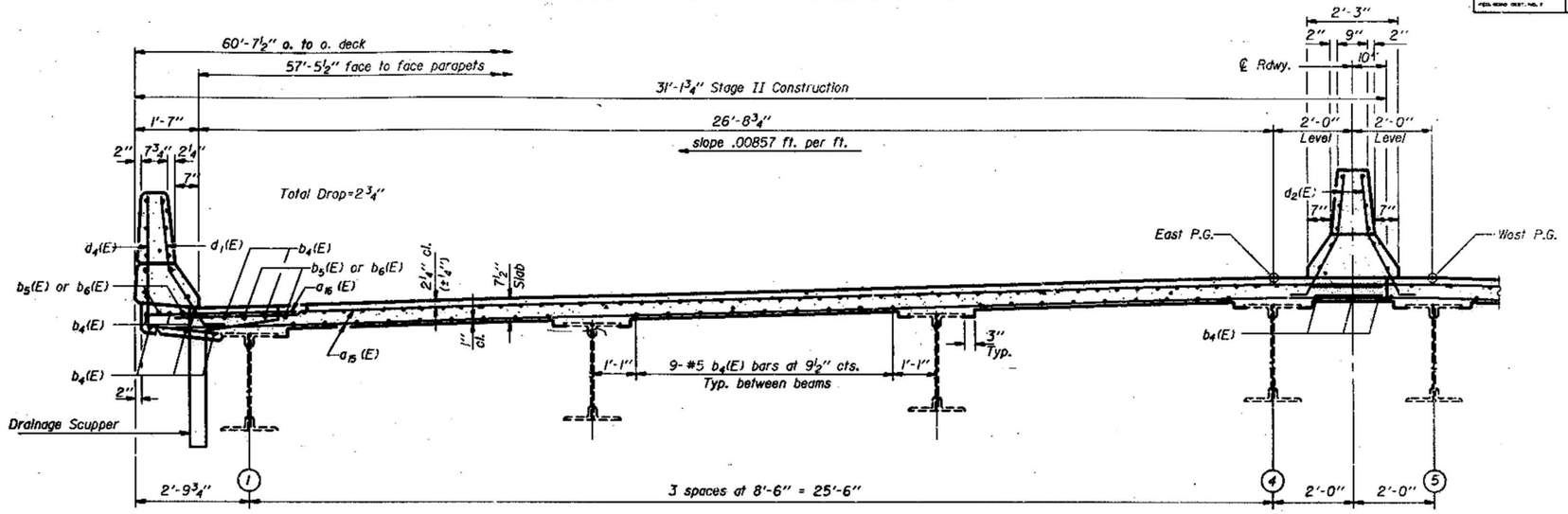


NEAR PIER

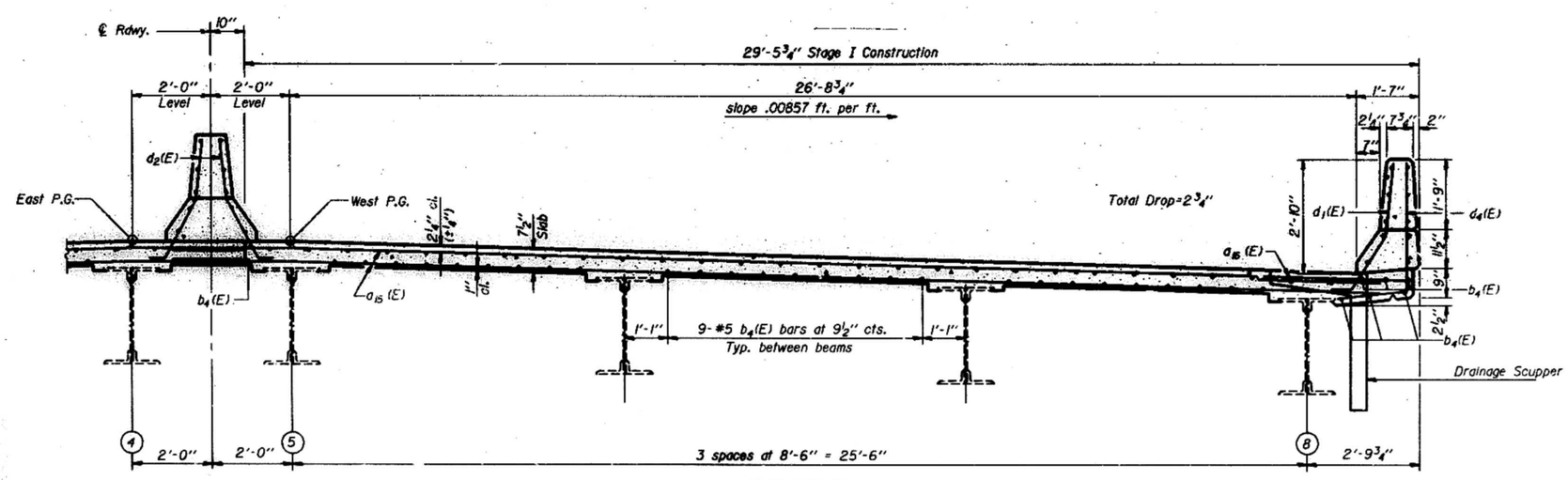


NEAR MIDSPAN

## CROSS SECTION
(Looking South)

Notes: See sheet #29 thru 33 for superstructure details and Bill of Material.

| | |
|---|---|
| DESIGNED | P. M. Patrick |
| CHECKED | A. L. Brown |
| DRAWN | RPS JRS |
| CHECKED | A. L. B. |

Dec. 20 1983

SOUTH APPROACH
SUPERSTRUCTURE
CROSS SECTION SPAN 3, 6, 9 & 12
F.A.I. RT. 74 SEC. 00-1
PEORIA-TAZEWELL COUNTIES
STATION 61+85

STATE OF ILLINOIS
DEPARTMENT OF TRANSPORTATION

| ROUTE NO. | SECTION | COUNTY | TOTAL SHEETS | SHEET NO. |
|---|---|---|---|---|
| F.A.I. 74 | | | 136 | 61 |
| FED. ROAD DIST. NO. 7 | | ILLINOIS | FED. AID PROJECT- | |

SHEET NO. 66
75 SHEETS

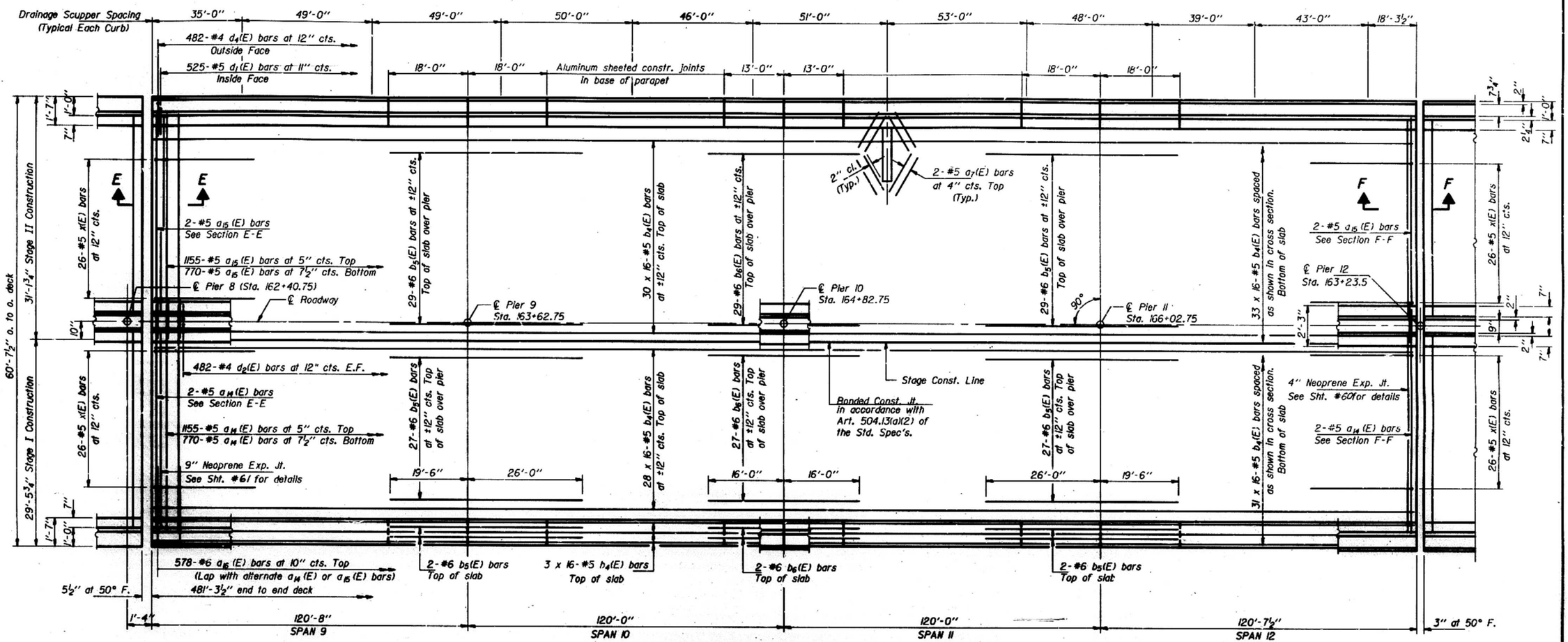


**PLAN**
DECK-4 SPAN UNIT

Notes: See sheet #29 thru 33 for superstructure details and Bill of Material.
Reinforcement bars designated (E) shall be epoxy coated.
Bars indicated thus 20 x 3-#5 etc. indicates 20 lines of bars with 3 lengths per line.
1'-3" Min. Lap for #5 bars.
See sheet #52 for details of parapet light pole mount and locations.

| | |
|---|---|
| DESIGNED | Patrick M Otten |
| CHECKED | A.L. Brown |
| DRAWN | RPS JRS |
| CHECKED | A.L.B. |

Dec. 29 1983

SOUTH APPROACH
SUPERSTRUCTURE
PLAN SPANS 9,10,11 & 12
F.A.I. RT.74 SEC.10D-1
PEORIA-TAZEWELL COUNTIES
STATION 151+85

# STATE OF ILLINOIS
# DEPARTMENT OF TRANSPORTATION

| | | | | | |
|---|---|---|---|---|---|
| | | | 136 | 62 | SHEET NO. 27 75 SHEETS |

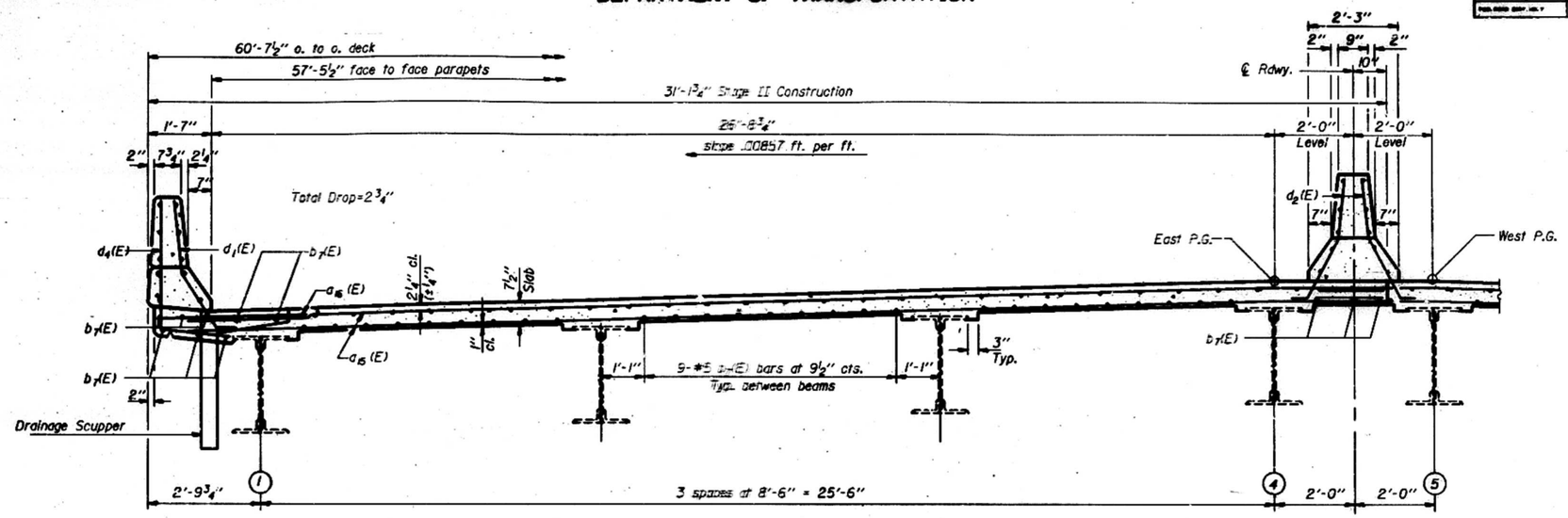


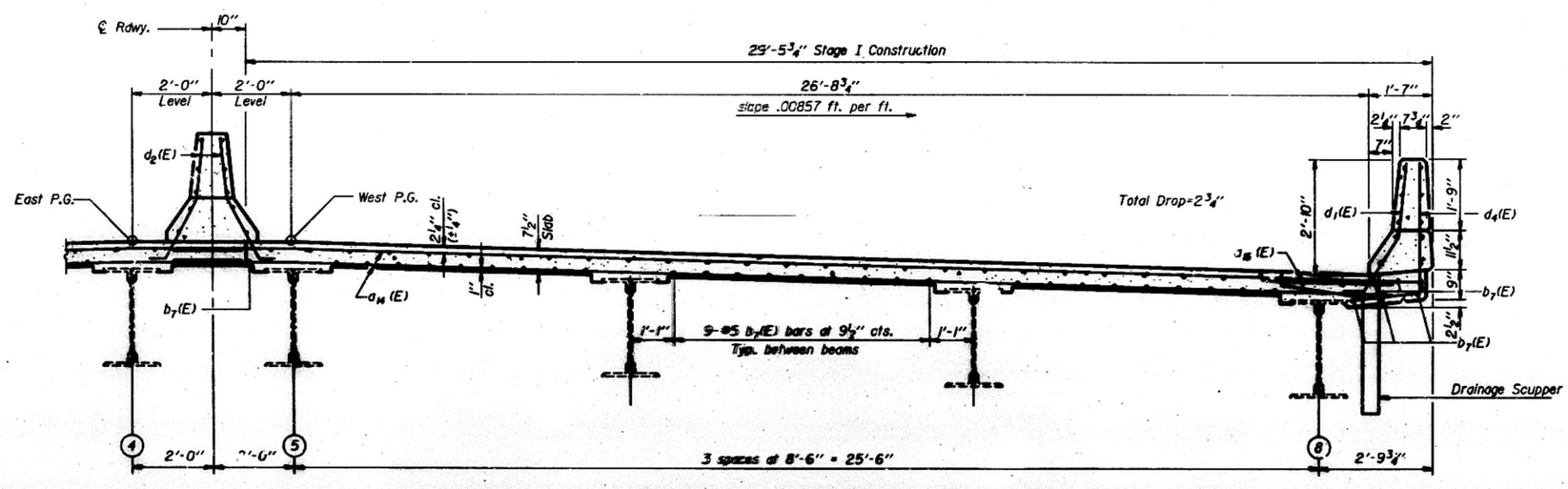


## CROSS SECTION
(Looking South)

Notes: See sheet #29 thru 33 for superstructure details and Bill of Material.

SOUTH APPROACH
SUPERSTRUCTURE
CROSS SECTION SPAN 13
F.A.I. RT. 74 SEC. 10D-1
PEORIA-TAZEWELL COUNTIES
STATION 151+85

STATE OF ILLINOIS
DEPARTMENT OF TRANSPORTATION

| ROUTE NO. | SECTION | COUNTY | TOTAL SHEETS | SHEET NO. |
|---|---|---|---|---|
| F.A.I. | | | 136 | 63 |
| F.A.I. ROAD DIST. NO. 7 | ILLINOIS | FED. AID PROJECT- | | |

SHEET NO. 28
75 SHEETS

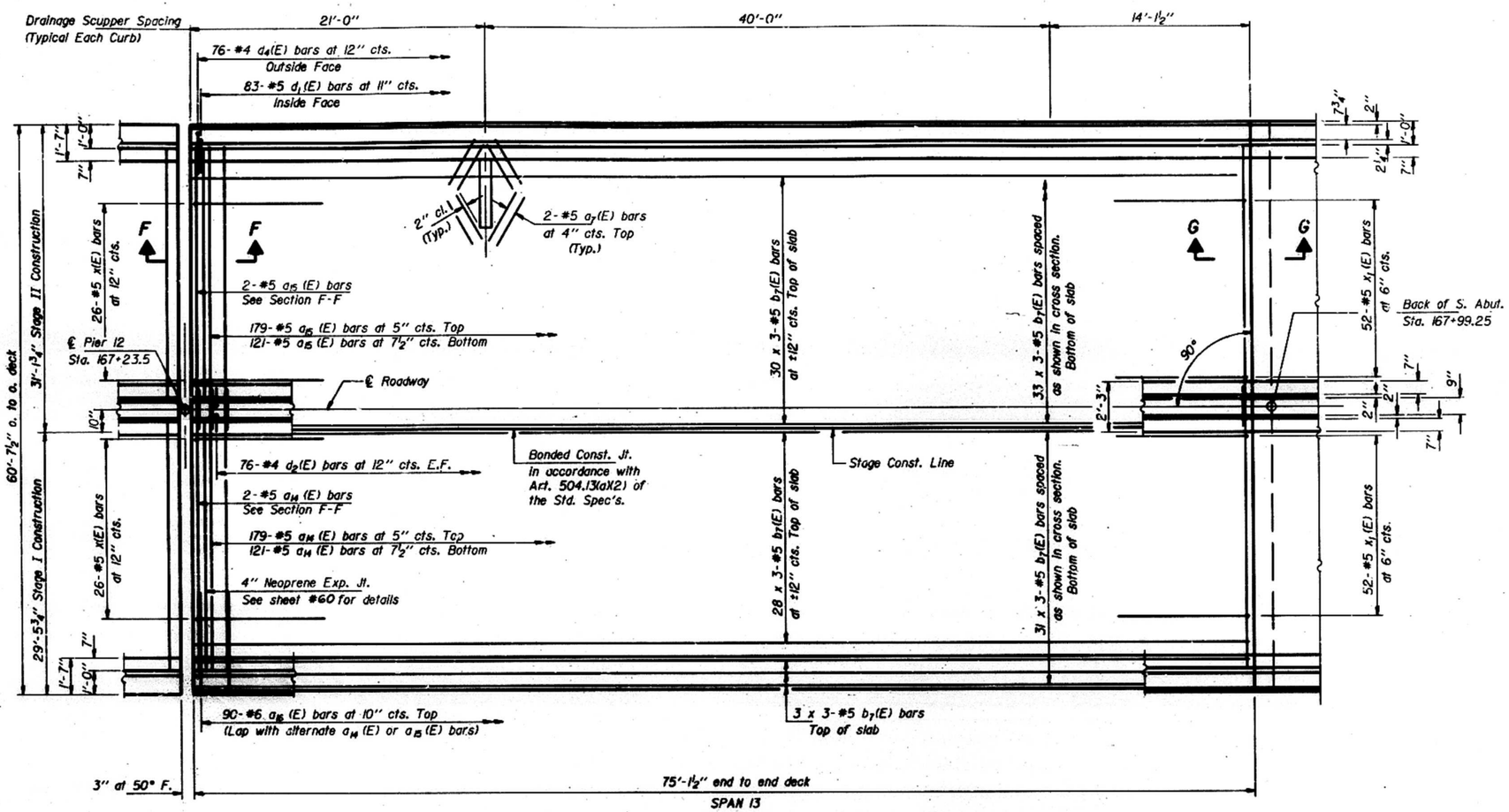


**PLAN**
DECK-SIMPLE SPAN UNIT

Notes: See sheet #29 thru 33 for superstructure details and Bill of Material.
Reinforcement bars designated (E) shall be epoxy coated.
Bars indicated thus: 20 x 3-#5 etc. indicates 20 lines of bars with 3 lengths per line.
1'-8" Min. Lap for #5 bars.
See sheet #52 for details of parapet light pole mount and locations.

Patrick M. Ptacek
A. H. Brown
RPS JRS
A. H. B.

No. 20 #83

SOUTH APPROACH
SUPERSTRUCTURE
PLAN SPAN 13
F.A.I. RT. 74 SEC. 100-F
PEORIA-TAZEWELL COUNTIES
STATION 151+85

STATE OF ILLINOIS
DEPARTMENT OF TRANSPORTATION

| ROUTE NO. | SECTION | COUNTY | TOTAL SHEETS | SHEET NO. |
|---|---|---|---|---|
| S.B.I. F.A. | | | 136 | 64 |
| P.B.-P.M.G. DIST. NO. 7 | | SUB-AREA | FED. AID PROJECT- | |

SHEET NO. 29
75 SHEETS

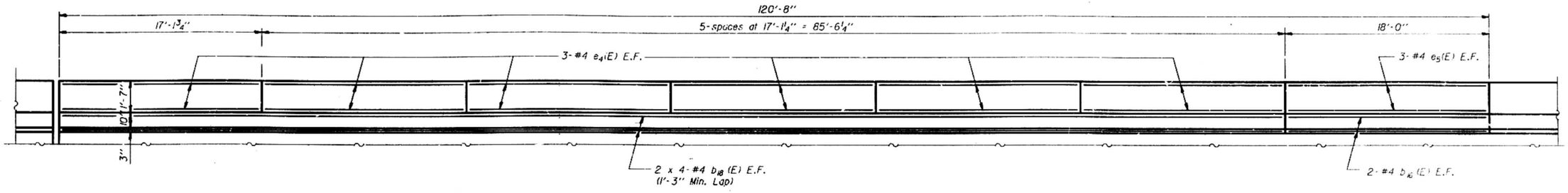


**ELEVATION-MEDIAN PARAPET**
**SPAN 9**
(Looking East)

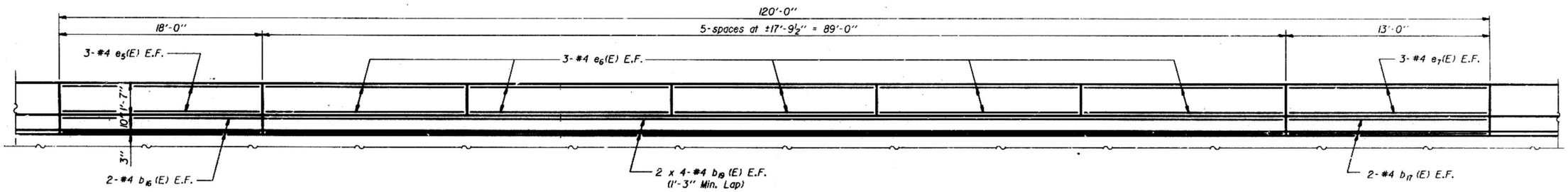


**ELEVATION-MEDIAN PARAPET**
**SPAN 10**
(Looking East)

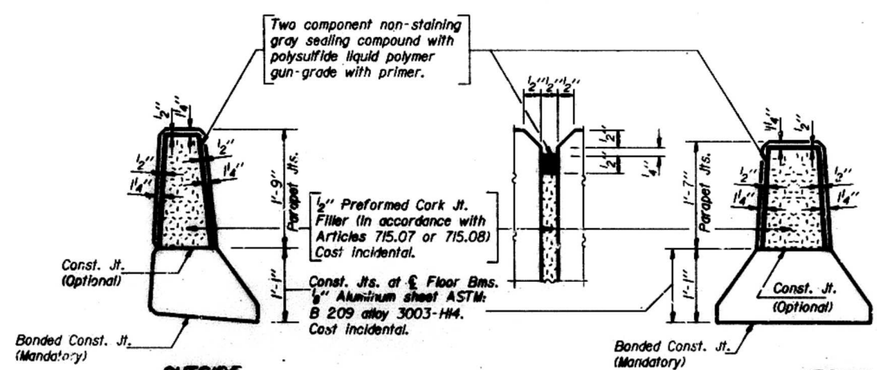


**OUTSIDE PARAPET**

**MEDIAN PARAPET**

**PARAPET JOINT DETAILS**

| | |
|---|---|
| DESIGNED | Patrick M. Patrick |
| CHECKED | A. L. Brown |
| DRAWN | R. Doty |
| CHECKED | A. L. Brown |

Dec 20 1983
APPROVED
DIRECTOR OF HIGHWAYS

**SOUTH APPROACH**
**SUPERSTRUCTURE DETAILS**
**F.A.I. RT. 74 SEC. 100-1**
**PEORIA-TAZEWELL COUNTIES**
**STATION 151+85**

STATE OF ILLINOIS
DEPARTMENT OF TRANSPORTATION

| ROUTE NO. | SECTION | COUNTY | TOTAL SHEETS | SHEET NO. |
|---|---|---|---|---|
| F.A.I. 74 | | | 136 | 65 |

SHEET NO. 65 / 75 SHEETS

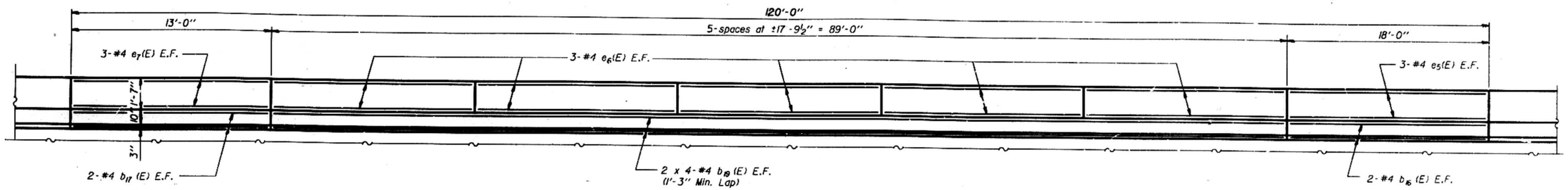


**ELEVATION-MEDIAN PARAPET**
**SPAN 11**
(Looking East)

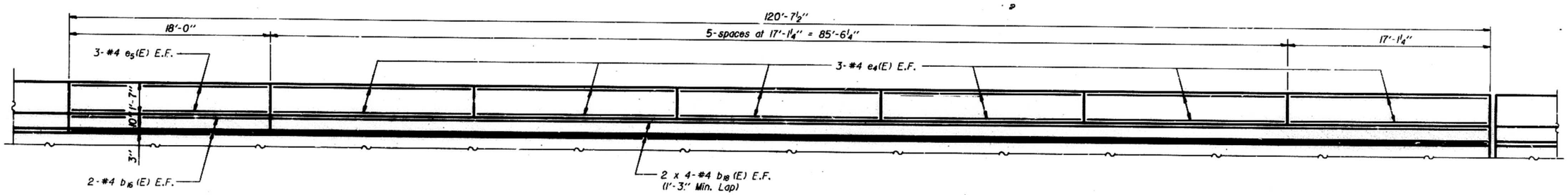


**ELEVATION-MEDIAN PARAPET**
**SPAN 12**
(Looking East)

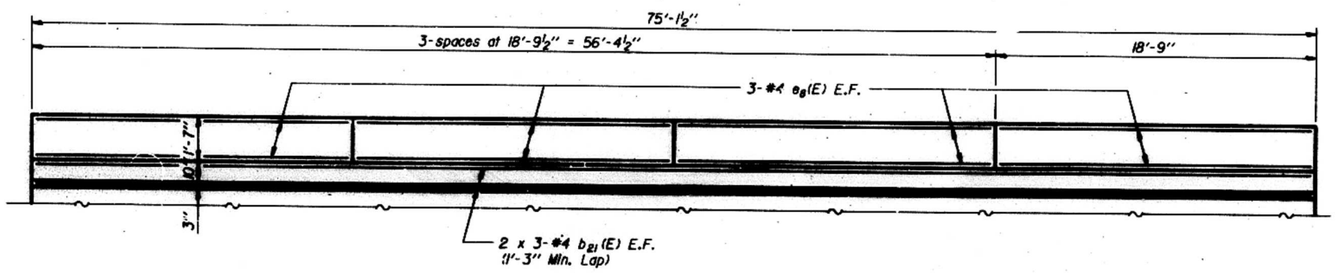


**ELEVATION-MEDIAN PARAPET**
**SPAN 13**
(Looking East)

| | |
|---|---|
| DES'GNED | Patricia M. Petrine |
| CHECKED | R. L. Brown |
| DRAWN | R. Joty |
| CHECKED | R. L. B. |

Dec. 20 1983
CHIEF ENGINEER
DIRECTOR OF HIGHWAYS

**SOUTH APPROACH**
**SUPERSTRUCTURE DETAILS**
**F.A.I. RT. 74 SEC. 100-1**
**PEORIA-TAZEWELL COUNTIES**
**STATION 151+85**

STATE OF ILLINOIS
DEPARTMENT OF TRANSPORTATION

| | | | | | |
|---|---|---|---|---|---|
| ROUTE NO. | SECTION | COUNTY | TOTAL SHEETS | SHEET NO. | |
| F.A.I. | | | 136 | 66 | SHEETS |
| FED. ROAD DIST. NO. 7 | ILLINOIS | FED. AID PROJECT- | | | |

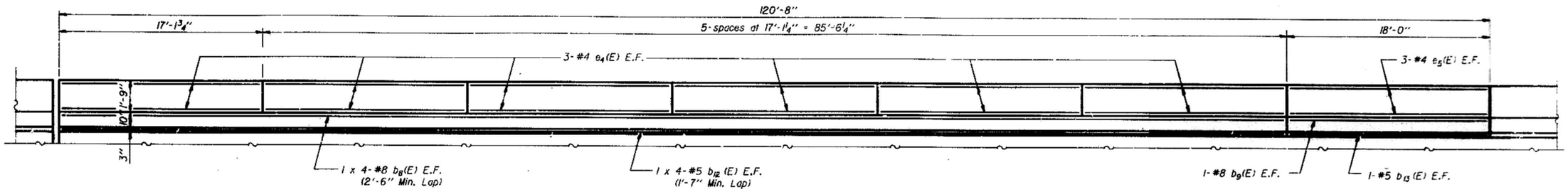


**ELEVATION-PARAPET**
**SPAN 9**
(Looking East)

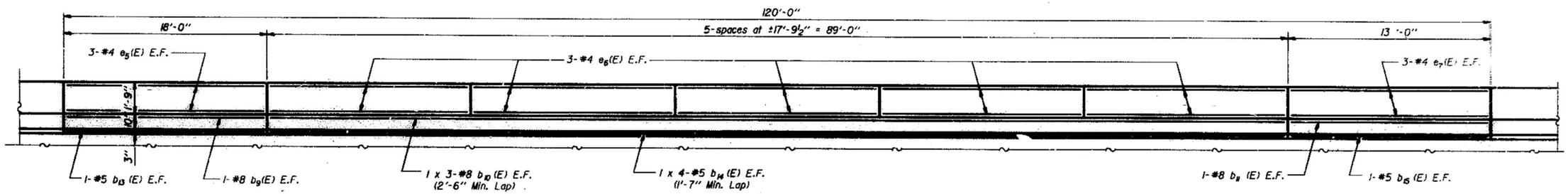


**ELEVATION-PARAPET**
**SPAN 10**
(Looking East)

| | |
|---|---|
| PREPARED | Peter A. D. Petrone |
| CHECKED | W.H. Ensor |
| DRAWN | R. Doty |
| CHECKED | W.H.B. |

Dec. 20 1983
DIRECTOR OF HIGHWAYS

**SOUTH APPROACH**
**SUPERSTRUCTURE DETAILS**
**F.A.I. RT. 74 SEC. 110-1**
**PEORIA-TAZEWELL COUNTIES**
**STATION 154+85**

STATE OF ILLINOIS
DEPARTMENT OF TRANSPORTATION

| | | | | |
|---|---|---|---|---|
| | | | 136 | 67 |

SHEET NO. 32
75 SHEETS

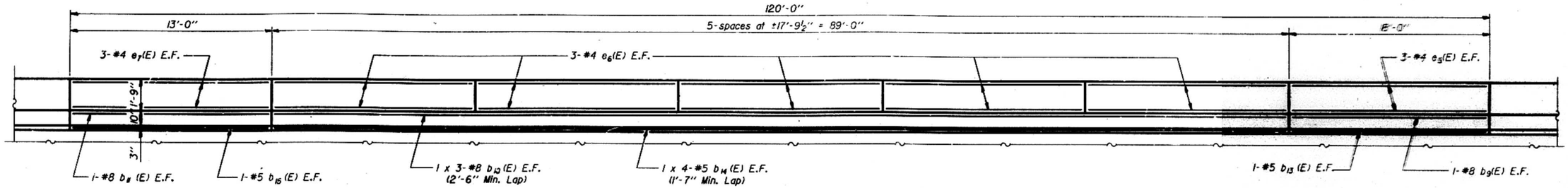


**ELEVATION-PARAPET**
**SPAN 11**
(Looking East)

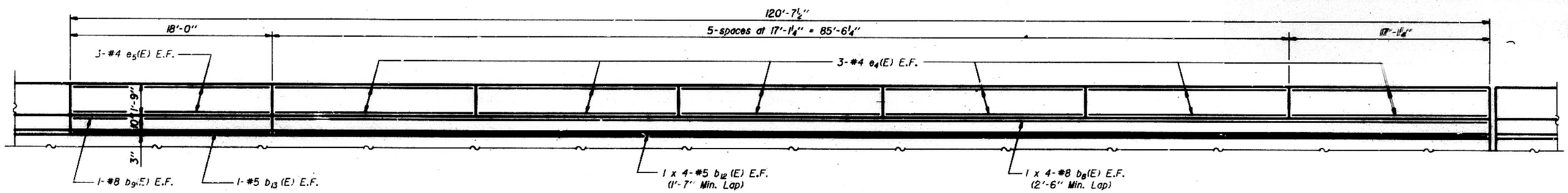


**ELEVATION-PARAPET**
**SPAN 12**
(Looking East)

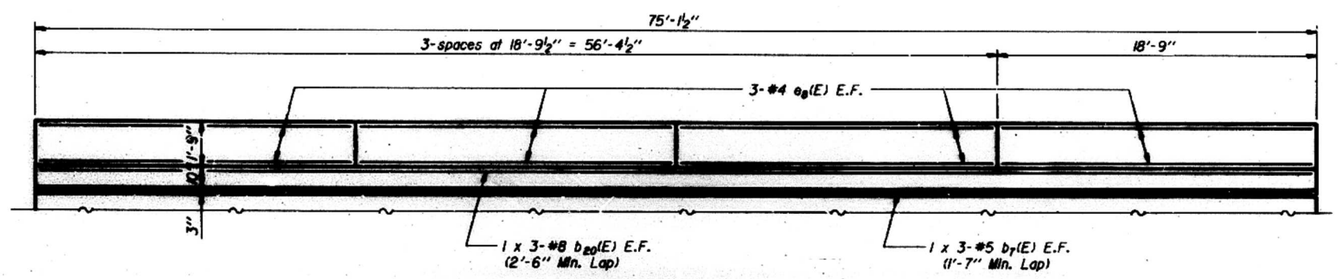


**ELEVATION-PARAPET**
**SPAN 13**
(Looking East)

| | |
|---|---|
| DESIGNED | |
| CHECKED | |
| DRAWN | R. Doty |
| CHECKED | |

Dec. 20 1983
ENGINEER
PROJECT ENGINEER
APPROVED
DIRECTOR OF HIGHWAYS

**SOUTH APPROACH**
**SUPERSTRUCTURE DETAILS**
**F.A.I. RT. 74 SEC. (10)-1**
**PEORIA-TAZEWELL COUNTIES**
**STATION 64+85**

STATE OF ILLINOIS
DEPARTMENT OF TRANSPORTATION

| ROUTE NO. | SECTION | COUNTY | TOTAL SHEETS | SHEET NO. |
|---|---|---|---|---|
| F.A.I. 74 | | | 136 | 68 |
| FED. ROAD DIST. NO. 7 | ILLINOIS | FED. AID PROJECT- | | |

SHEET NO. 55
75 SHEETS

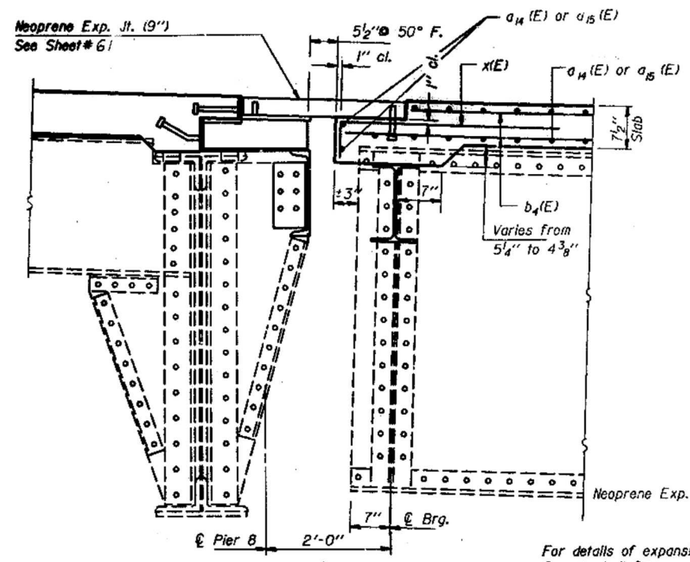


SECTION E-E

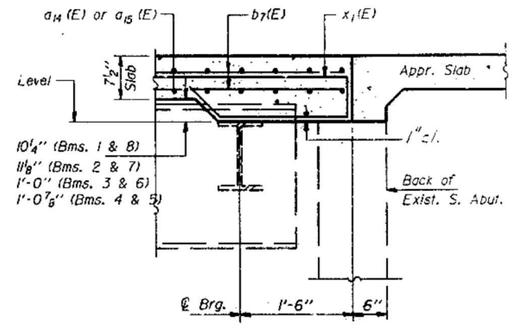


SECTION G-G

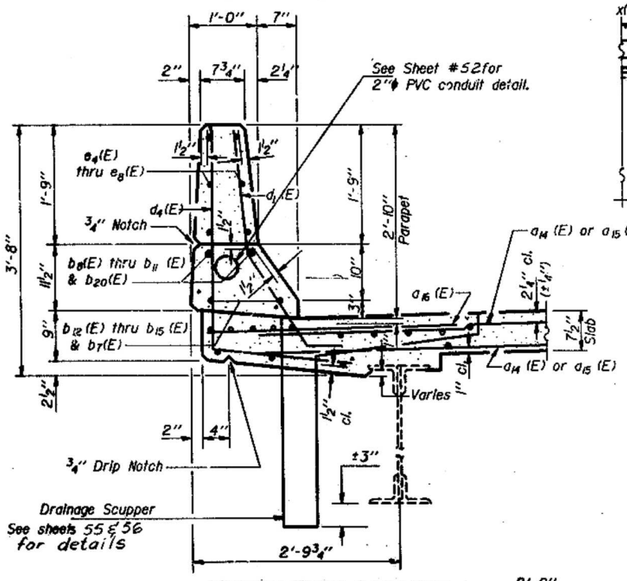


SECTION THRU PARAPET

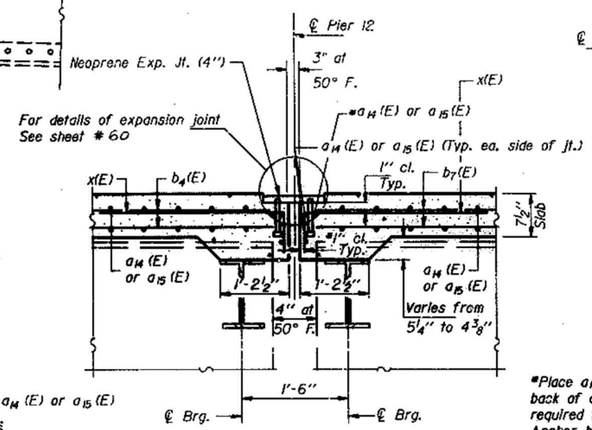


SECTION F-F

*Place $a_{14}$ (E) or $a_{15}$ (E) bars in back of anchor bolt as shown if required to maintain 1" cl. (+0-⅛").
Anchor bolts should be tied to these bars.

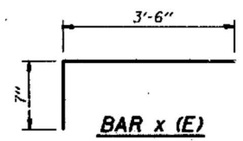


BAR x (E)

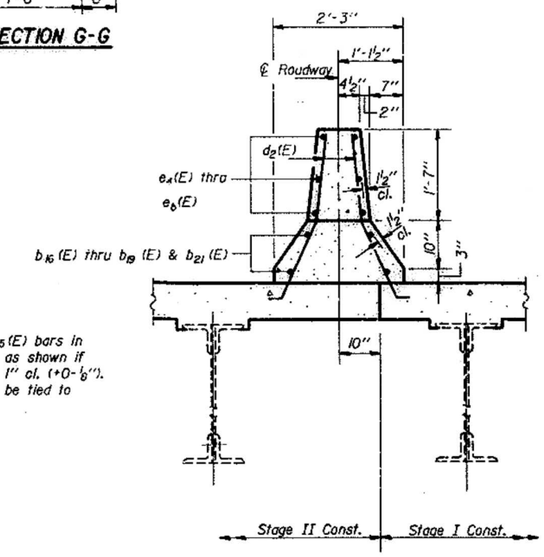


SECTION THRU MEDIAN

## SOUTH APPROACH BILL OF MATERIAL

| Bar | No. | Size | Length | Shape |
|---|---|---|---|---|
| $a_7$(E) | 192 | #5 | 2'-0" | |
| $a_{14}$ (E) | 2231 | #5 | 29'-11" | |
| $a_{15}$ (E) | 2231 | #5 | 30'-4" | |
| $a_{16}$ (E) | 1336 | #6 | 4'-0" | |
| | | | | |
| $b_4$(E) | 2048 | #5 | 31'-8" | |
| $b_5$(E) | 120 | #6 | 45'-6" | |
| $b_6$(E) | 60 | #6 | 32'-0" | |
| $b_7$(E) | 396 | #5 | 26'-2" | |
| $b_8$(E) | 32 | #8 | 27'-6" | |
| $b_9$(E) | 16 | #8 | 17'-9" | |
| $b_{10}$ (E) | 24 | #8 | 31'-4" | |
| $b_{11}$ (E) | 8 | #8 | 12'-9" | |
| $b_{12}$ (E) | 32 | #5 | 26'-10" | |
| $b_{13}$ (E) | 16 | #5 | 17'-9" | |
| $b_{14}$ (E) | 32 | #5 | 23'-4" | |
| $b_{15}$ (E) | 8 | #5 | 12'-9" | |
| $b_{16}$ (E) | 16 | #4 | 17'-9" | |
| $b_{17}$ (E) | 8 | #4 | 12'-9" | |
| $b_{18}$ (E) | 32 | #4 | 26'-9" | |
| $b_{19}$ (E) | 32 | #4 | 23'-3" | |
| $b_{20}$(E) | 12 | #8 | 26'-9" | |
| $b_{21}$ (E) | 12 | #4 | 26'-0" | |
| | | | | |
| $d_1$(E) | 1216 | #5 | 3'-11" | |
| $d_2$(E) | 1116 | #4 | 3'-8" | |
| $d_4$(E) | 1116 | #4 | 5'-2" | |
| $d_7$(E) | 15 | #6 | 4'-5" | |
| $d_8$(E) | 25 | #6 | 8'-11" | |
| | | | | |
| $e_4$(E) | 216 | #4 | 16'-11" | |
| $e_5$(E) | 72 | #4 | 17'-9" | |
| $e_6$(E) | 180 | #4 | 17'-6" | |
| $e_7$(E) | 36 | #4 | 12'-9" | |
| $e_8$(E) | 72 | #4 | 18'-6" | |
| | | | | |
| x(E) | 156 | #5 | 4'-1" | |
| $x_1$(E) | 104 | #5 | 7'-11" | |
| Reinforcement Bars (Epoxy Coated) | | | Lbs. | 268,120 |
| Class X Concrete | | | Cu. Yds. | 990.0 |

Reinforcement bars designated (E) shall be epoxy coated.
See Sheet #52 for placement of $d_1$(E) and $d_8$(E) bars.

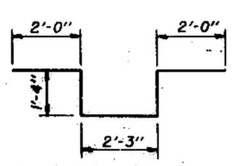


BAR $d_8$(E)

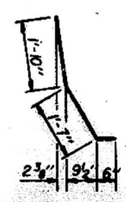


BAR $d_1$(E)

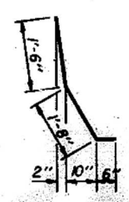


BAR $d_2$(E)

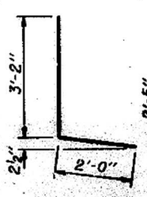


BAR $d_4$(E)

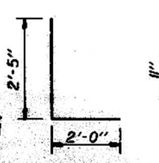


BAR $d_7$(E)

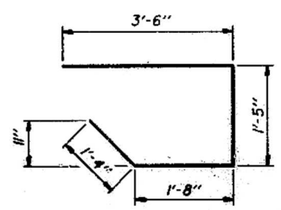


BAR $x_1$(E)

| | |
|---|---|
| DESIGNED | Patrick M. Patrum |
| CHECKED | A. L. Brown |
| DRAWN | R. Doty |
| CHECKED | A. L. B. |

Dec 20 1983
ENGINEER OF BRIDGES AND STRUCTURES
APPROVED
DIRECTOR OF HIGHWAYS

**SOUTH APPROACH SUPERSTRUCTURE DETAILS**
**F.A.I. RT. 74 SEC. 100-1**
**PEORIA-TAZEWELL COUNTIES**
**STATION 151+85**

STATE OF ILLINOIS
DEPARTMENT OF TRANSPORTATION

| ROUTE NO. | SECTION | COUNTY | TOTAL SHEETS | SHEET NO. |
|---|---|---|---|---|
| F.A.I. | | | 136 | 69 |
| FED. ROAD DIST. NO. 7 | | ILLINOIS | FED. AID PROJECT- | |

SHEET NO. 54
75 SHEETS

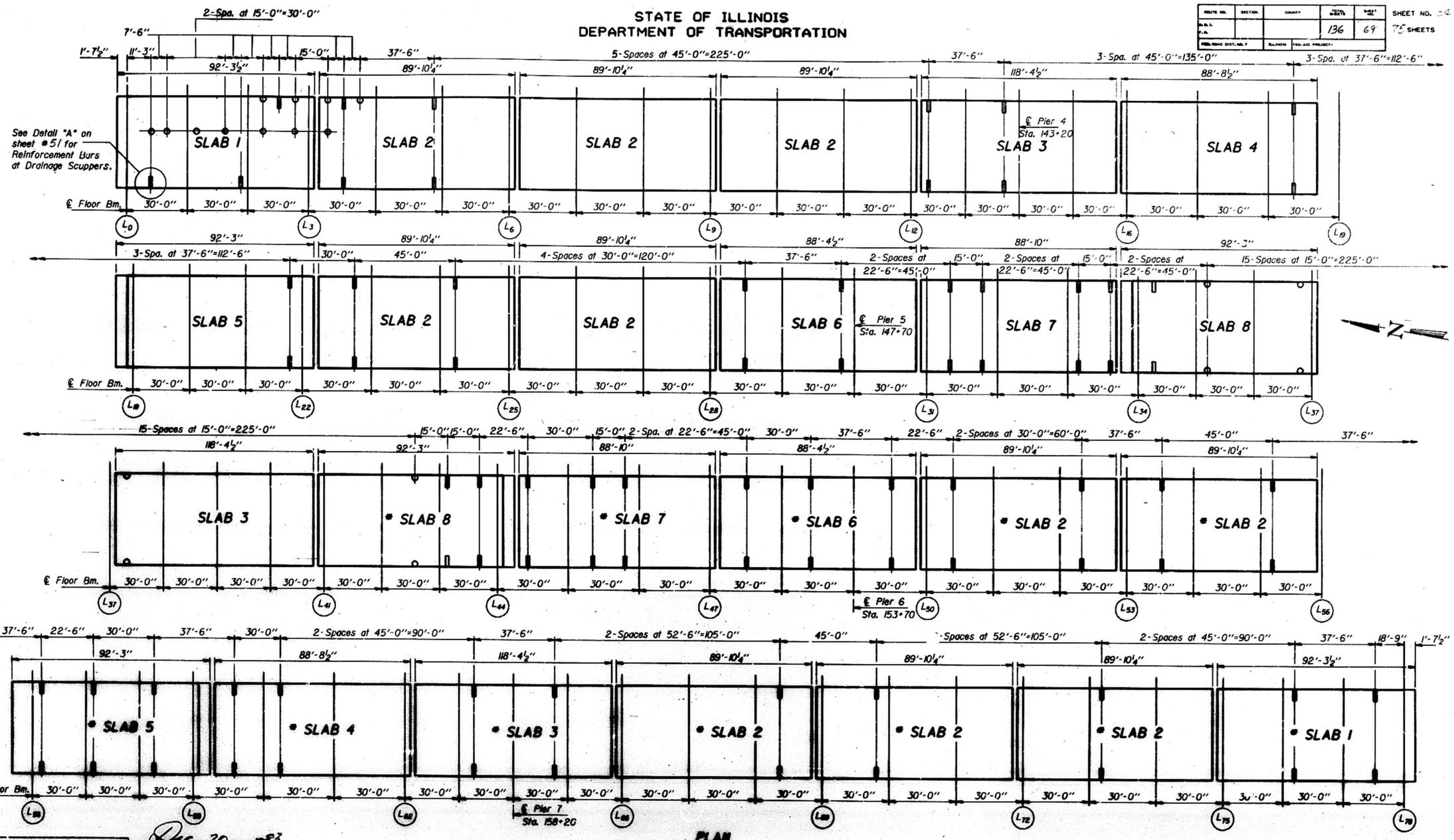


PLAN

| | |
|---|---|
| DRAWN | Patrick M. Petrone |
| CHECKED | A. L. Brown |
| DRAWN | R. Doty |
| CHECKED | A. L. B. |

Dec. 20 1983

○ = 6" ϕ Floor Drains
▮ = 6" x 2'-6" Drainage Scuppers, Special

LEGEND

* Except for Deck Drainage, reverse slab details to opposite hand.

SUPERSTRUCTURE LAYOUT-TRUSS
F.A.I. RT. 74 SEC. 100-1
PEORIA-TAZEWELL COUNTIES
STATION 151+85

| ROUTE NO. | SECTION | COUNTY | TOTAL SHEETS | SHEET NO. |
|---|---|---|---|---|
| F.A.I. | | | 136 | 70 |
| FED. ROAD DIST. NO. 7 | | | | |

SHEET NO. 55
75 SHEETS

# STATE OF ILLINOIS
# DEPARTMENT OF TRANSPORTATION

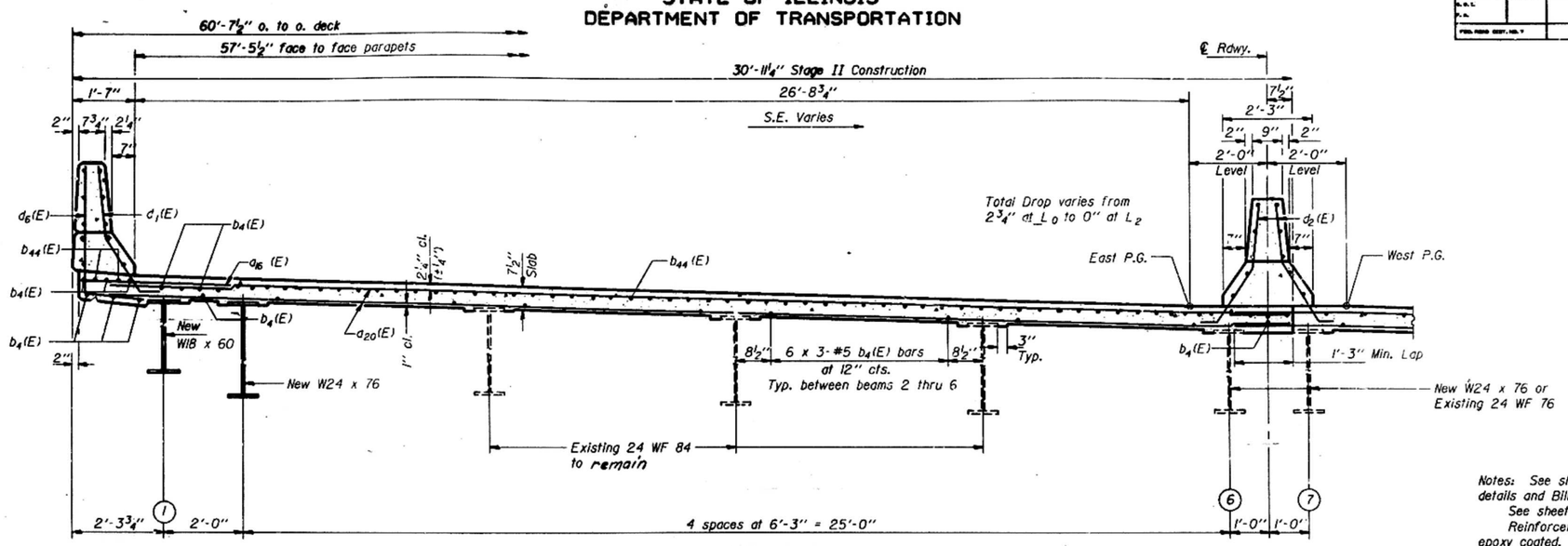


NEAR FLOORBEAM

Notes: See sheet #45 thru 51 for superstructure details and Bill of Material.
See sheet #37 for Plan Views.
Reinforcement bars designated (E) shall be epoxy coated.
Bars indicated thus, 6 x 3-#5 etc. indicates 6 lines of bars with 3 lengths per line.

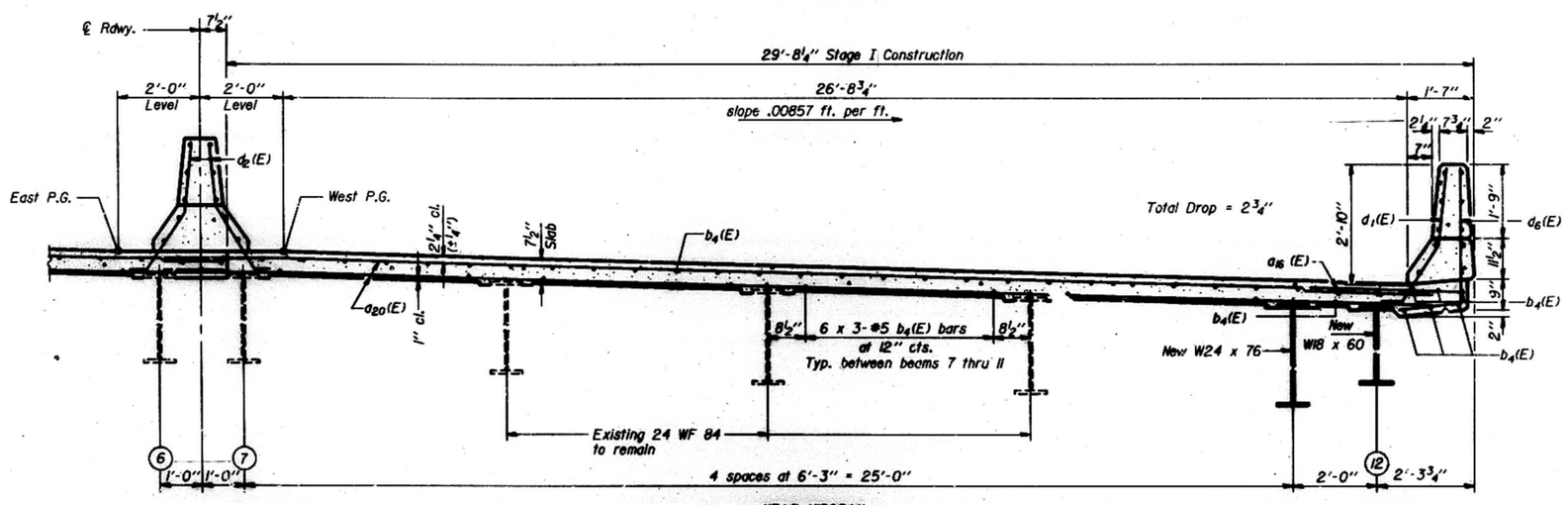


NEAR MIDSPAN

## CROSS SECTION
(Looking South)

| | |
|---|---|
| DESIGNED | Patricia M. Petrone |
| CHECKED | A. L. Brown |
| DRAWN | R. Doty |
| CHECKED | A. L. B. |

Dec 20 1983

**SUPERSTRUCTURE - TRUSS**
**CROSS SECTION PANELS 1 AND 2**
**F.A.I. RT. 74 SEC. 100-1**
**PEORIA-TAZEWELL COUNTIES**
**STATION 151+85**

| ROUTE NO. | SECTION | COUNTY | TOTAL SHEETS | SHEET NO. |
|---|---|---|---|---|
| S.B.I. R.A. | | | 136 | 71 |
| FED. ROAD DIST. NO. 7 | ILLINOIS | FED. AID PROJECT- | | |

SHEET NO. 56
75 SHEETS

# STATE OF ILLINOIS
# DEPARTMENT OF TRANSPORTATION

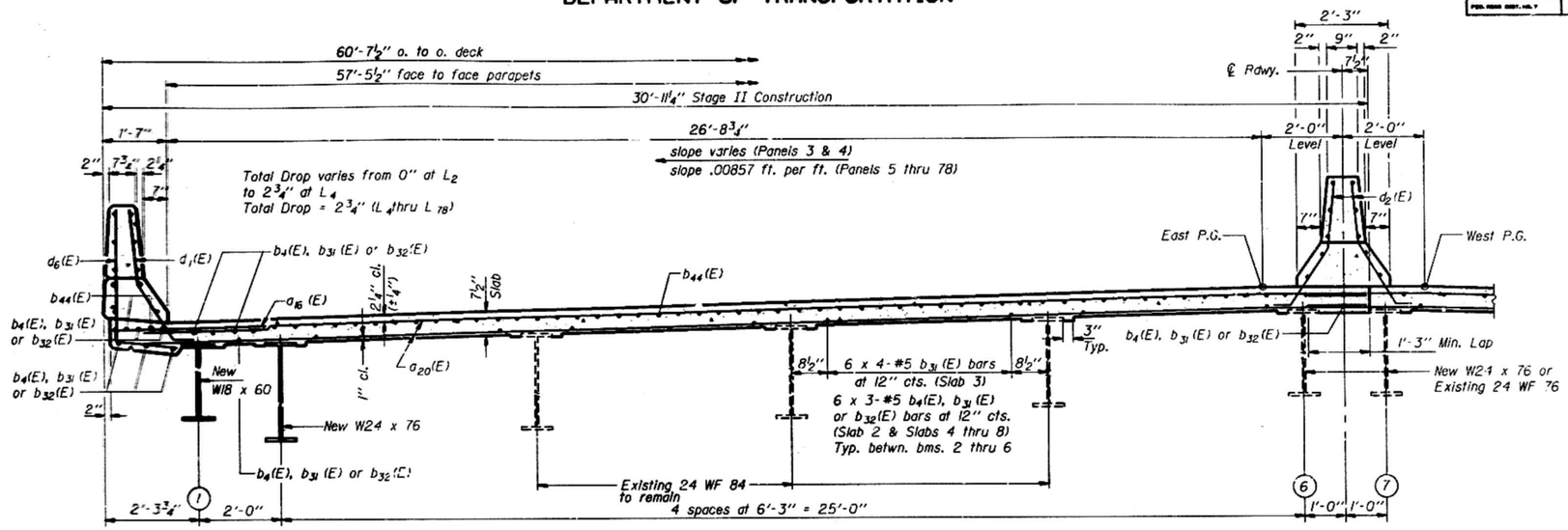


NEAR FLOORBEAM

Notes: See sheet #45 thru 51 for superstructure details and Bill of Material.
See sheets #38 thru #44 for Plan Views.
Reinforcement bars designated (E) shall be epoxy coated.
Bars indicated thus, 6 x 3-#5 etc. indicates 6 lines of bars with 3 lengths per line.

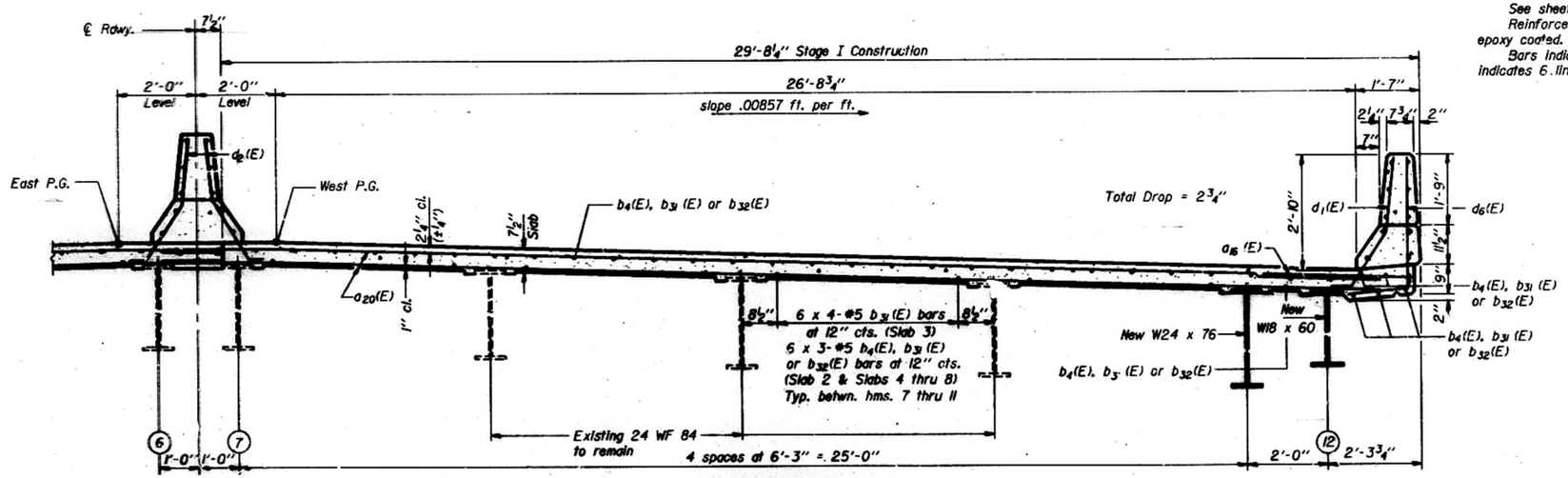


NEAR MIDSPAN

## CROSS SECTION
(Looking South)

| | |
|---|---|
| DESIGNED | Patrick M Petrone |
| CHECKED | A. L. Brown |
| DRAWN | R. Doty |
| CHECKED | A. L. B. |

Dec. 20 83

**SUPERSTRUCTURE-TRUSS**
**CROSS SECTION PANELS 3 THRU 78**
**F.A.I. RT. 74 SEC. 100-1**
**PEORIA-TAZEWELL COUNTIES**
**STATION 151+85**

STATE OF ILLINOIS
DEPARTMENT OF TRANSPORTATION

| ROUTE NO. | SECTION | COUNTY | TOTAL SHEETS | SHEET NO. |
|---|---|---|---|---|
| F.A.I. | | | 136 | 72 |
| FED. ROAD DIST. NO. 7 | | ILLINOIS | FED. AID PROJECT- | |

SHEET NO. 72
75 SHEETS

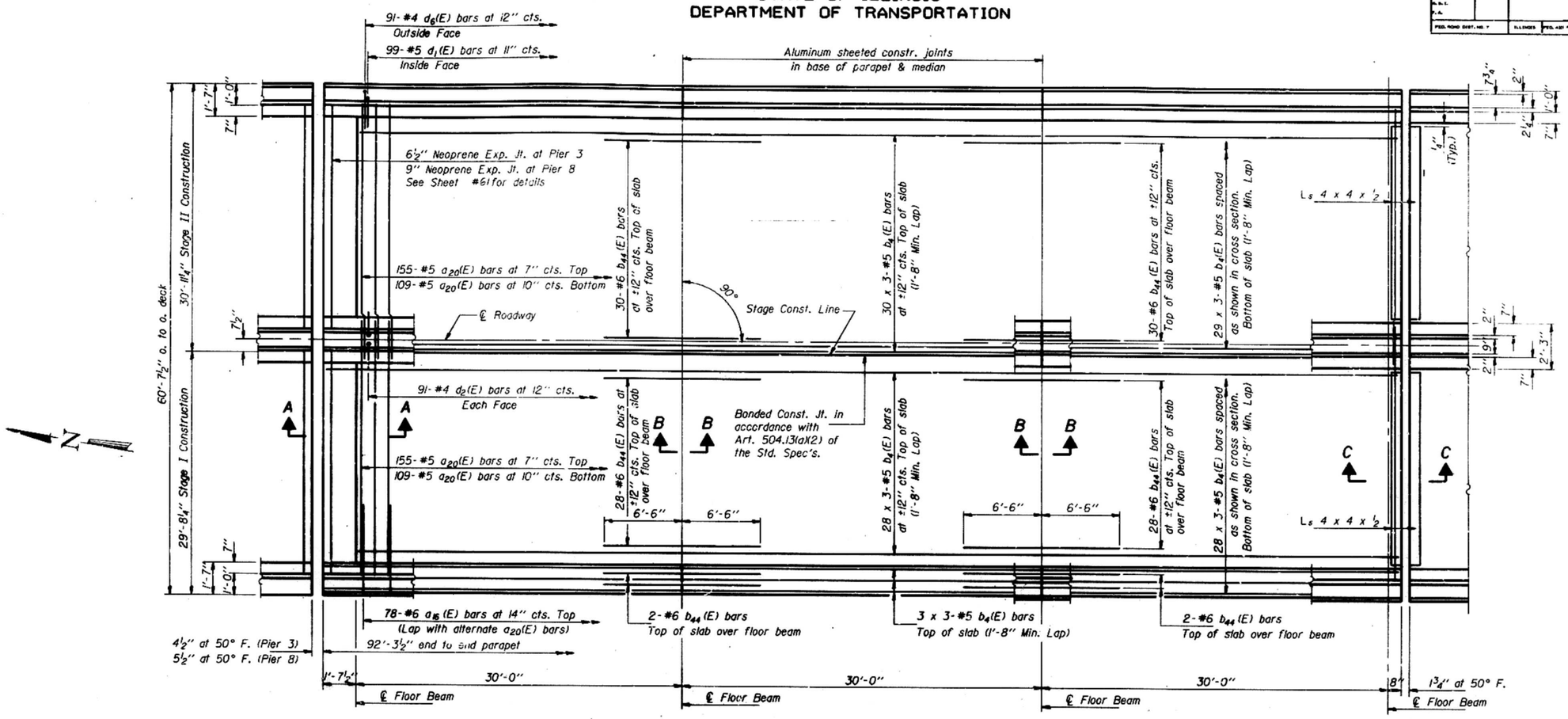


**PLAN**

Notes: See sheet #45 thru 51 for superstructure details and Bill of Material.
Reinforcement bars designated (E) shall be epoxy coated.
Bars indicated thus 20 x 3-#5 etc. indicates 20 lines of bars with 3 lengths per line.
See sheets #35 or #36 for Cross Sections.
See sheets #34 & #51 for Drainage Scupper details and locations.

| | |
|---|---|
| DESIGNED | Patrick M. Petrus |
| CHECKED | A. L. Brown |
| DRAWN | R. Doty |
| CHECKED | A. L. B. |

Dec. 15 1983
APPROVED
DIRECTOR OF HIGHWAYS

**SUPERSTRUCTURE-TRUSS**
**PLAN SLAB 1**
**F.A.I. RT. 74 SEC. 100-1**
**PEORIA-TAZEWELL COUNTIES**
**STATION 151+85**

STATE OF ILLINOIS
DEPARTMENT OF TRANSPORTATION

| ROUTE NO. | SECTION | COUNTY | TOTAL SHEETS | SHEET NO. |
|---|---|---|---|---|
| F.A.I. 74 | | | 136 | 73 |
| FED. ROAD DIST. NO. 7 | | ILLINOIS | FED. AID PROJECT- | |

SHEET NO. 55
75 SHEETS

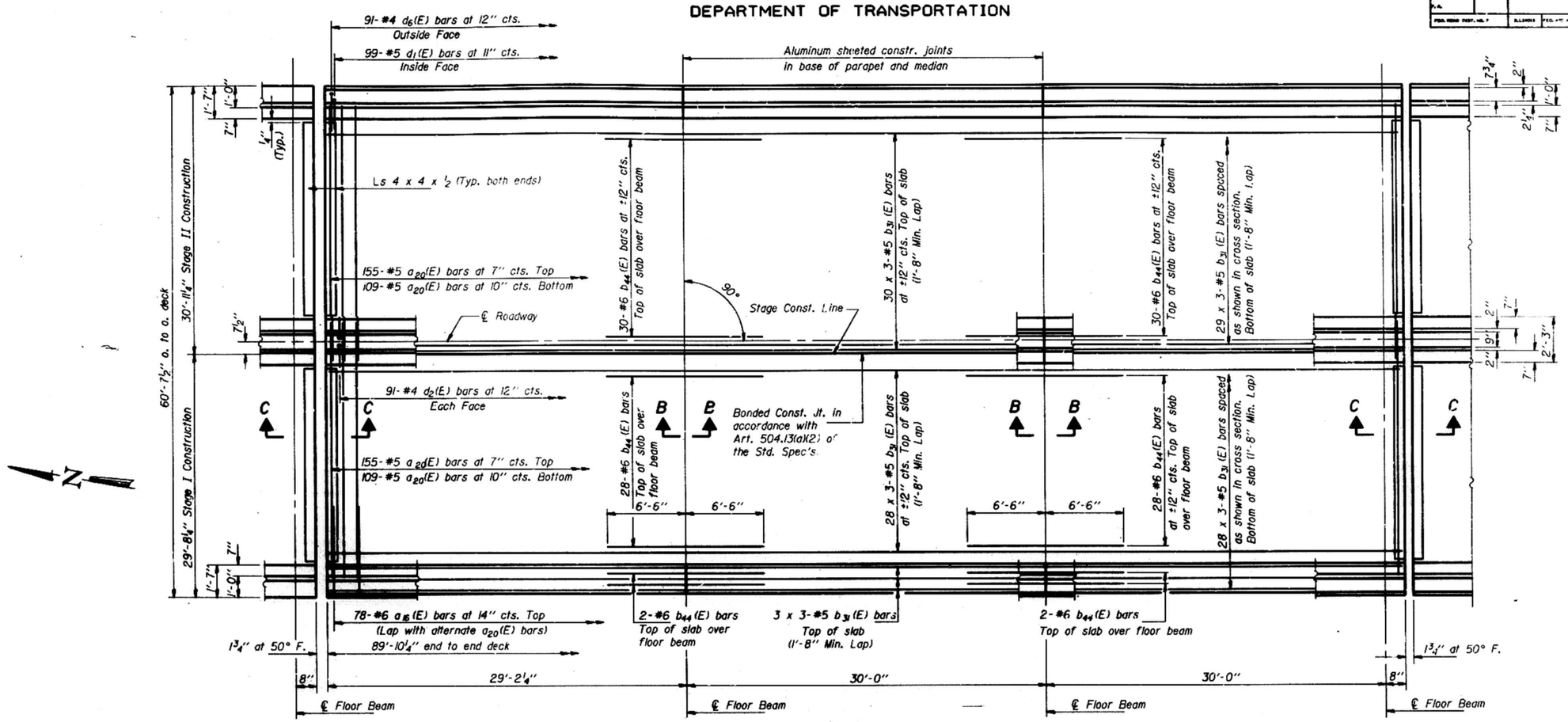


**PLAN**

Notes: See sheets #45 thru #51 for superstructure details and Bill of Material.
Reinforcement bars designated (E) shall be epoxy coated.
Bars indicated thus: 20 x 3-#5 etc. indicates 20 lines of bars with 3 lengths per line.
See sheet #36 for Cross Section.
See sheets #34 and #51 for Drainage Scupper and Floor Drain details and locations.

| | |
|---|---|
| DESIGNED | Patrick M Petroni |
| CHECKED | R. L. Brown |
| DRAWN | R. Doty |
| CHECKED | R. L. B. |

Dec. 20 1983
Engineer of Bridges and Structures

**SUPERSTRUCTURE-TRUSS**
**PLAN SLAB 2**
**F.A.I. RT. 74 SEC. 100-1**
**PEORIA-TAZEWELL COUNTIES**
**STATION 151+85**

| ROUTE NO. | SECTION | COUNTY | TOTAL SHEETS | SHEET NO. |
|---|---|---|---|---|
| S.B.I. F.A. | | | 136 | 76 |
| FED. ROAD DIST. NO. 7 | | ILLINOIS | FED. AID PROJECT- | |

SHEET NO. 76 OF 136 SHEETS

STATE OF ILLINOIS
DEPARTMENT OF TRANSPORTATION

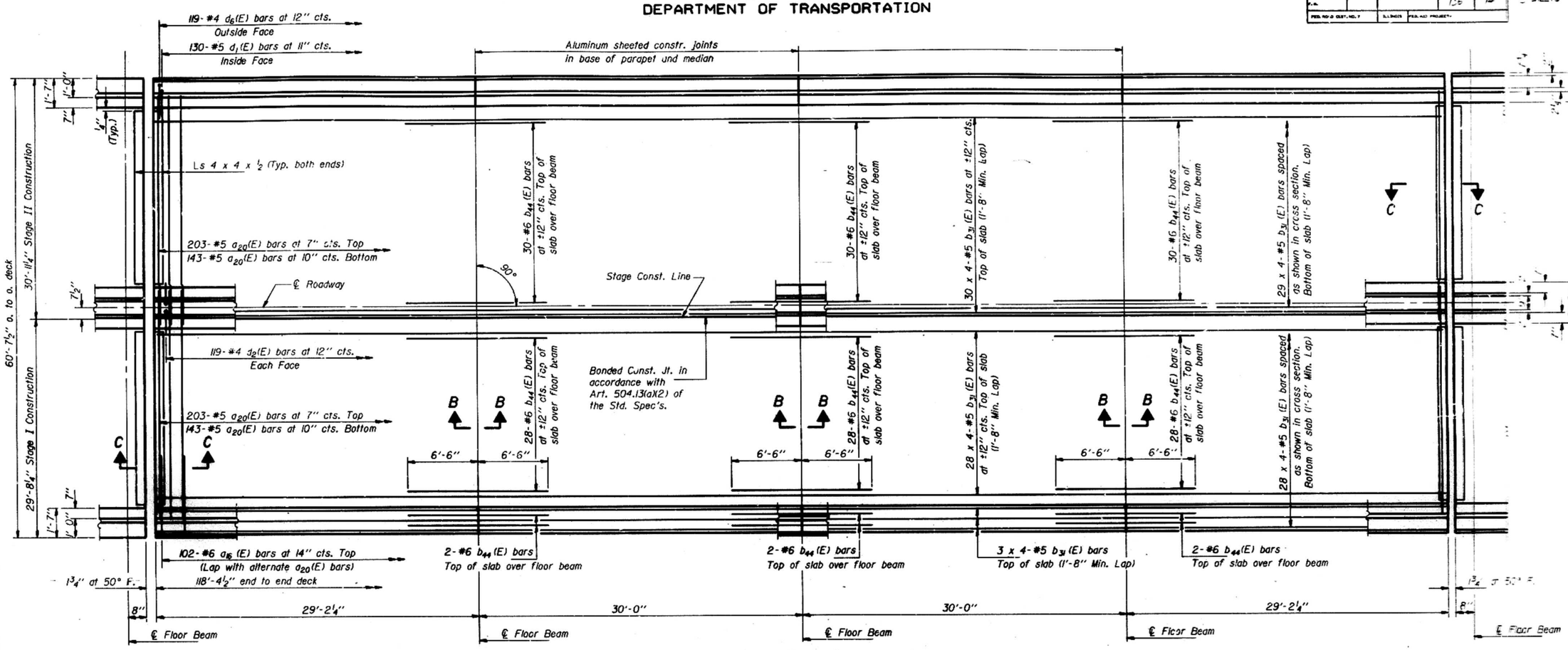


PLAN

Notes: See sheets #45 thru #51 for superstructure details and Bill of Material.
Reinforcement bars designated (E) shall be epoxy coated.
Bars indicated thus 20 x 3-#5 etc. indicates 20 lines of bars with 3 lengths per line.
See sheet #36 for Cross Section.
See sheets #34 and #51 for Drainage Scupper and Floor Drain details and locations.

| | |
|---|---|
| DESIGNED | Patricia M. Peters |
| CHECKED | A. L. Brown |
| DRAWN | R. Doty |
| CHECKED | A. L. B. |

Dec. 20 1983

APPROVED

DIRECTOR OF HIGHWAYS

SUPERSTRUCTURE-TRUSS
PLAN SLAB 3
F.A.I. RT. 74 SEC. 100-1
PEORIA-TAZEWELL COUNTIES
STATION 151+85

STATE OF ILLINOIS
DEPARTMENT OF TRANSPORTATION

| | | | | | |
|---|---|---|---|---|---|
| | | | 136 | 75 | SHEET NO. 40 OF 75 SHEETS |

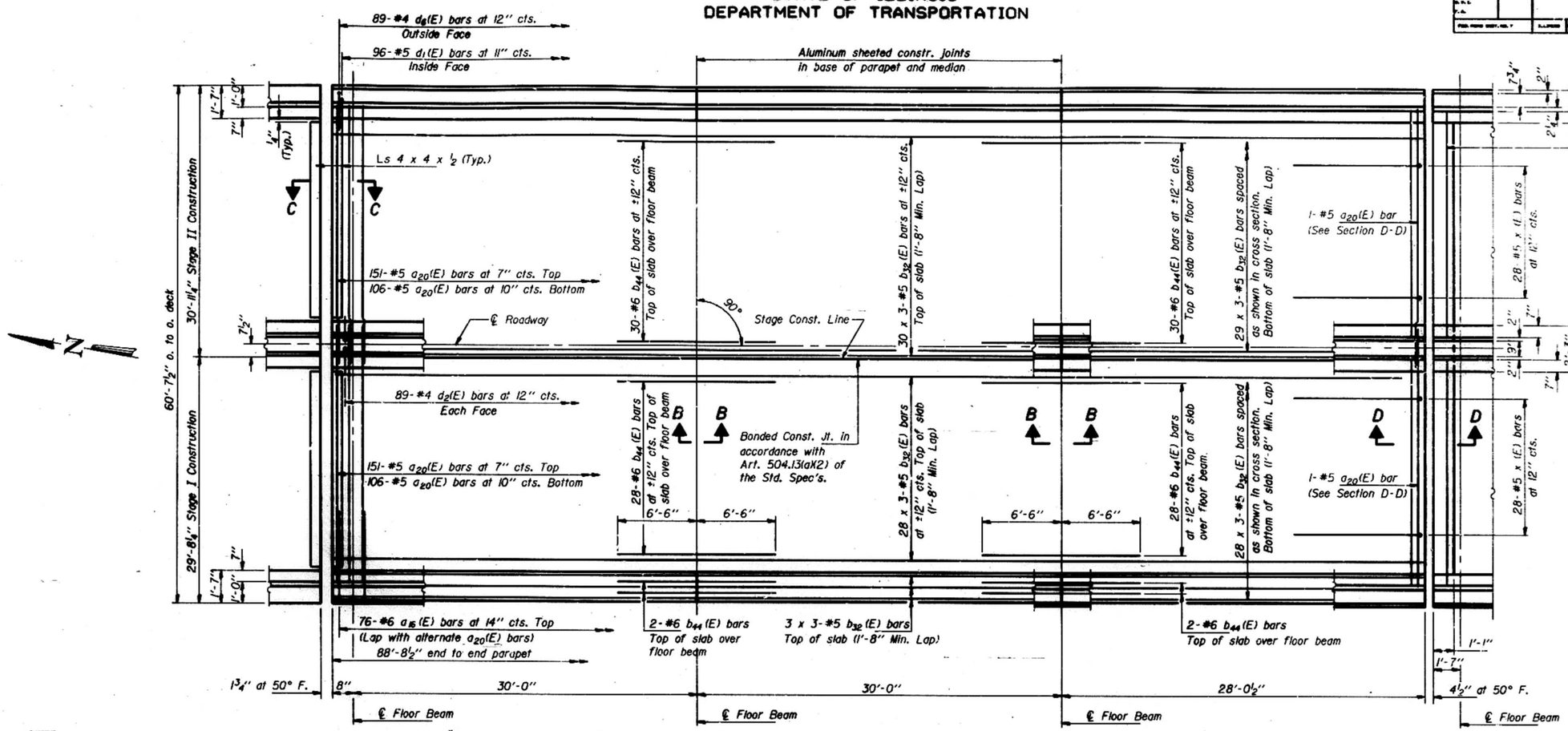


**PLAN**

Notes: See sheets #45 thru #51 for superstructure details and Bill of Material.
Reinforcement bars designated (E) shall be epoxy coated.
Bars indicated thus 20 x 3-#5 etc. indicates 20 lines of bars with 3 lengths per line.
See sheet #36 for Cross Section.
See sheets #34 and #51 for Drainage Scupper and Floor Drain details and locations.

| | |
|---|---|
| DESIGNED | F. M. Petrie |
| CHECKED | A. L. Brown |
| DRAWN | R. Doty |
| CHECKED | A. L. B. |

Dec. 20 1983

SUPERSTRUCTURE-TRUSS
PLAN SLAB 4
F.A.I. RT. 74 SEC. 100-1
PEORIA-TAZEWELL COUNTIES
STATION 154+85

| | | | | | |
|---|---|---|---|---|---|
| | | | 136 | 76 | |

SHEET NO. 41
75 SHEETS

# STATE OF ILLINOIS
# DEPARTMENT OF TRANSPORTATION

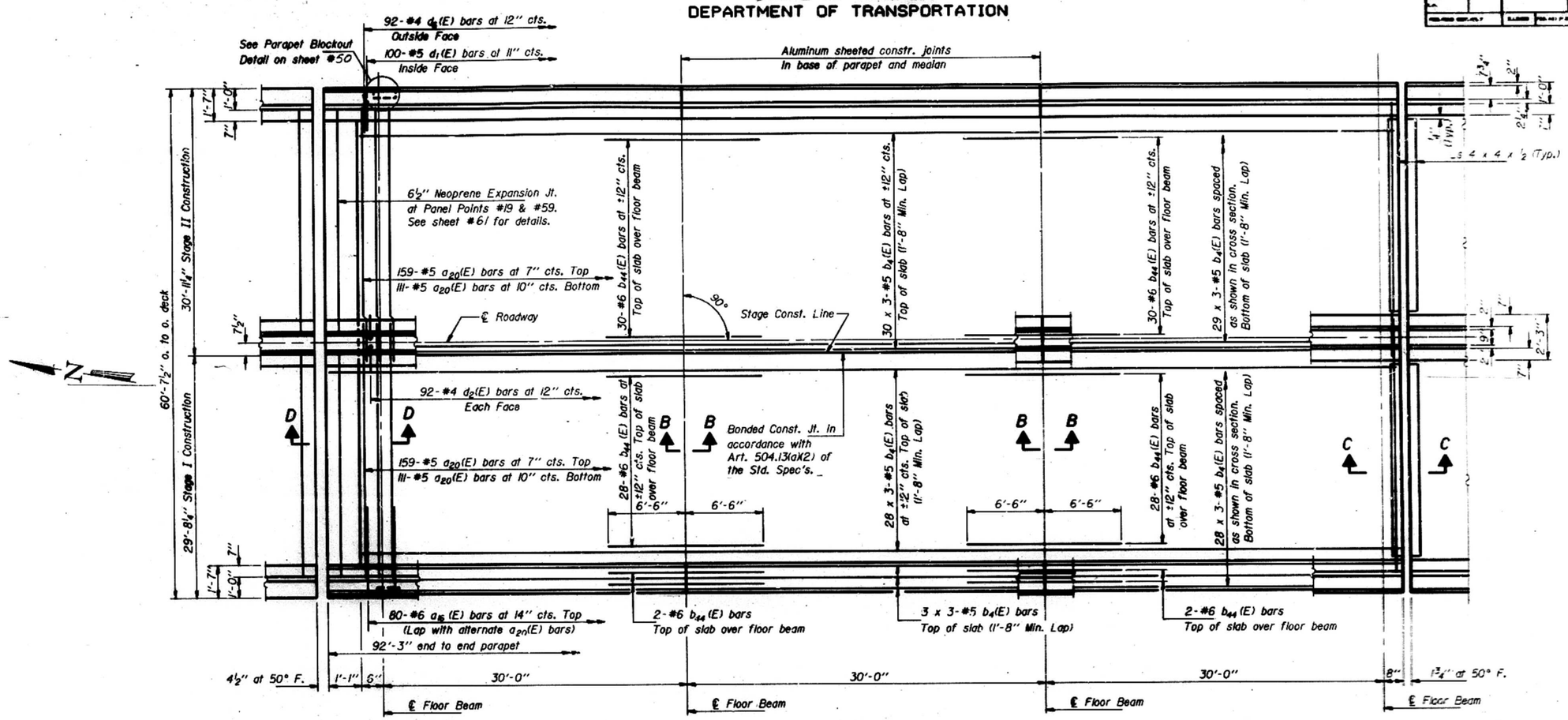


**PLAN**

Notes: See sheets #45 thru #51 for superstructure details and Bill of Material.
Reinforcement bars designated (E) shall be epoxy coated.
Bars indicated thus 20 x 3-#5 etc. indicates 20 lines of bars with 3 lengths per line.
See sheet #36 for Cross Section.
See sheets #34 and #51 for Drainage Scupper and Floor Drain details and locations.

| | |
|---|---|
| DESIGNED | Patrick McPhee |
| CHECKED | R. L. Brown |
| DRAWN | R. Doty |
| CHECKED | R. L. B. |

Dec. 20 '83

**SUPERSTRUCTURE-TRUSS**
**DECK SLAB S**
**F.A.I. RT. 74 SEC. (DD-1)**
**PEORIA-TAZEWELL COUNTIES**
**STATION 61+85**

STATE OF ILLINOIS
DEPARTMENT OF TRANSPORTATION

| ROUTE NO. | SECTION | COUNTY | TOTAL SHEETS | SHEET NO. |
|---|---|---|---|---|
| F.A.I. 74 | | | 136 | 77 |
| FED. ROAD DIST. NO. 7 | | ILLINOIS | FED. AID PROJECT- | |

SHEET NO. 42
75 SHEETS

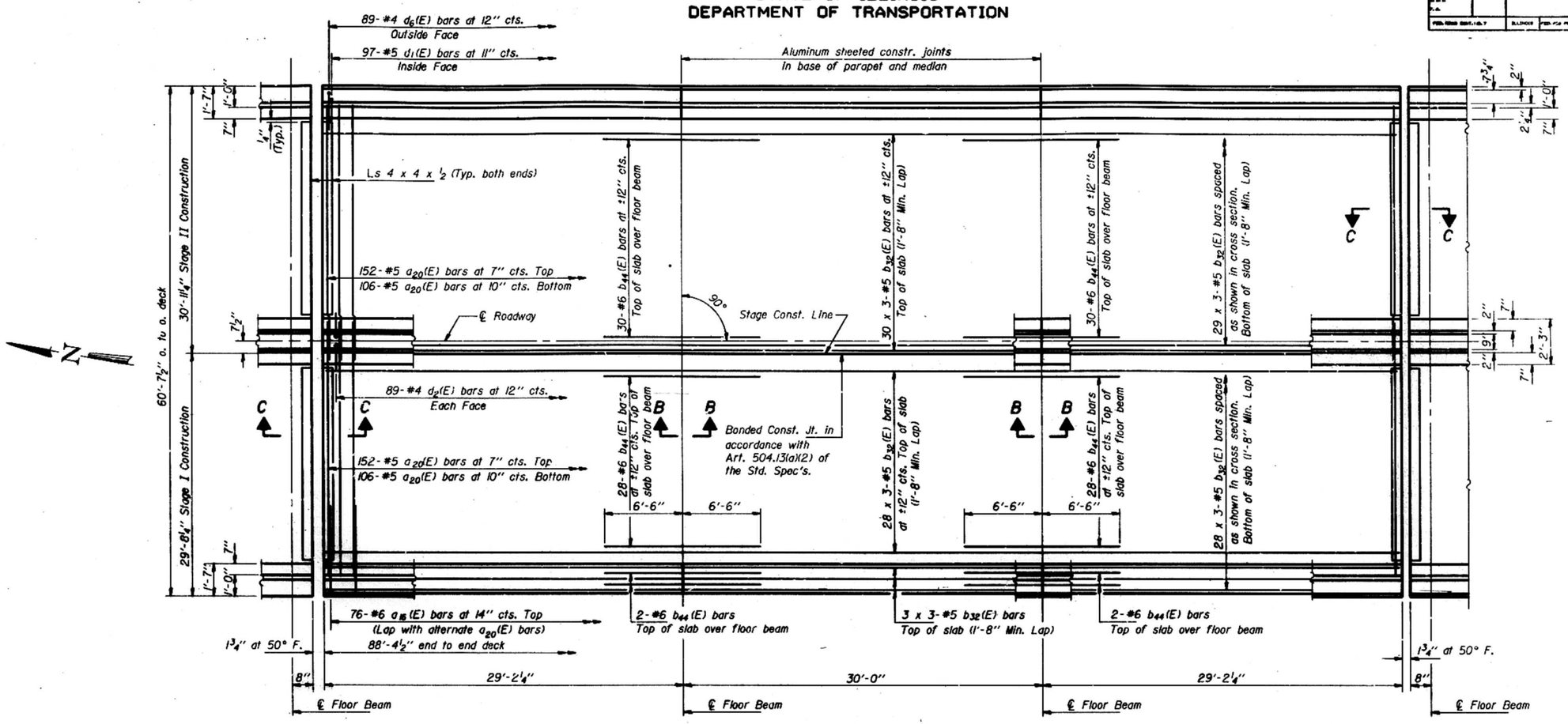


**PLAN**

Notes: See sheets #45 thru #51 for superstructure details and Bill of Material.
Reinforcement bars designated (E) shall be epoxy coated.
Bars indicated thus 20 x 3-#5 etc. indicates 20 lines of bars with 3 lengths per line.
See sheet #36 for Cross Section.
See sheets #34 and #51 for Drainage Scupper and Floor Drain details and locations.

| | |
|---|---|
| DESIGNED | Patricia M. Petrone |
| CHECKED | A. L. Brown |
| DRAWN | R. Doty |
| CHECKED | A. L. B. |

Dec. 20 1983

SUPERSTRUCTURE - TRUSS
PLAN SLAB 6
F.A.I. RT. 74 SEC. 100-1
PEORIA-TAZEWELL COUNTIES
STATION 154+85

STATE OF ILLINOIS
DEPARTMENT OF TRANSPORTATION

| ROUTE NO. | SECTION | COUNTY | TOTAL SHEETS | SHEET NO. |
|---|---|---|---|---|
| S.B.I. F.A. | | | 136 | 78 |
| FED. ROAD DIST. NO. 7 | ILLINOIS | FED. AID PROJECT- | | |

SHEET NO. 42
75 SHEETS

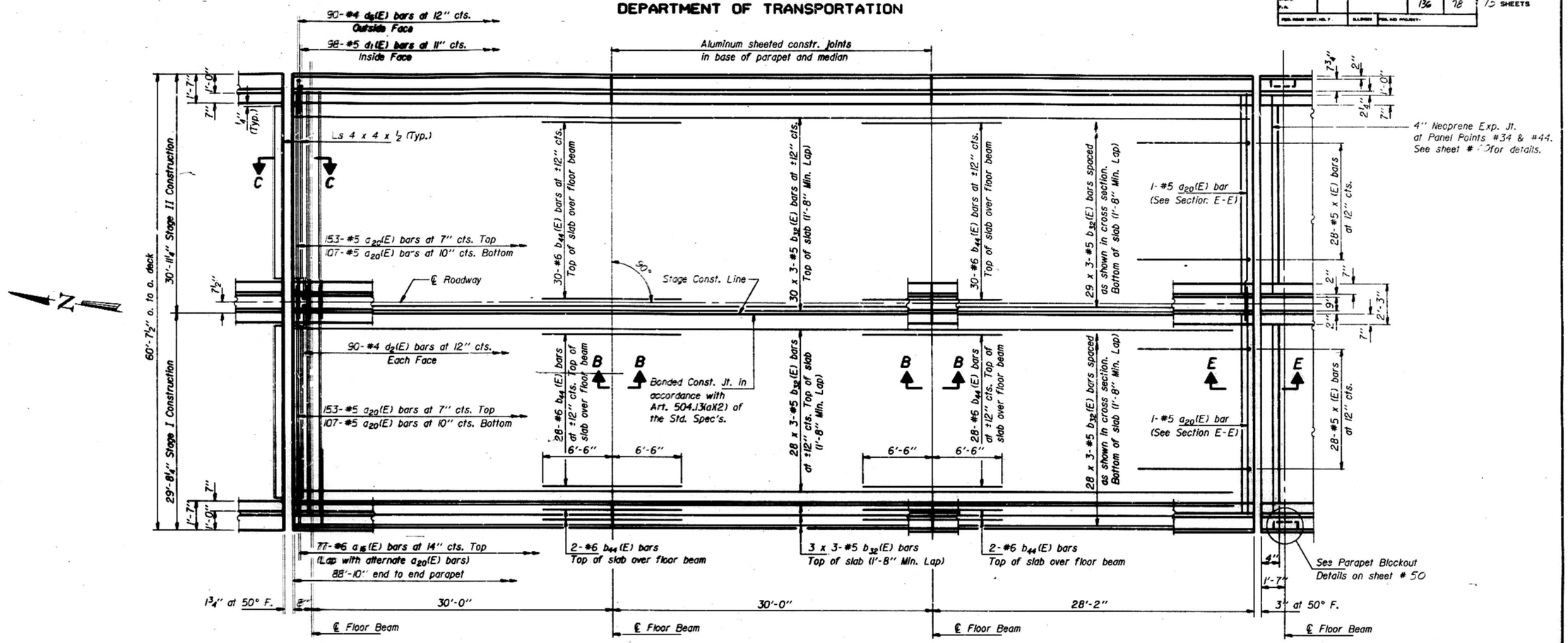


**PLAN**

Notes: See sheets #45 thru #51 for superstructure details and Bill of Material.
Reinforcement bars designated (E) shall be epoxy coated.
Bars indicated thus 20 x 3-#5 etc. indicates 20 lines of bars with 3 lengths per line.
See sheet #36 for Cross Section.
See sheets #34 and #51 for Drainage Scupper and Floor Drain details and locations.

| | |
|---|---|
| DESIGNED | Patrick M. Petrone |
| CHECKED | A. L. Brown |
| DRAWN | R. Doty |
| CHECKED | A. L. B. |

Dec. 20 83

SUPERSTRUCTURE - TRUSS
PLAN SLAB 7
F.A.I. RT. 74 SEC. 100-1
PEORIA-TAZEWELL COUNTIES
STATION 151+85

STATE OF ILLINOIS
DEPARTMENT OF TRANSPORTATION

| ROUTE NO. | SECTION | COUNTY | TOTAL SHEETS | SHEET NO. |
|---|---|---|---|---|
| F.A.S. | | | 136 | 77 |
| FED. ROAD DIST. NO. 7 | | ILLINOIS | FED. AID PROJECT- | |

SHEET NO. 44
75 SHEETS

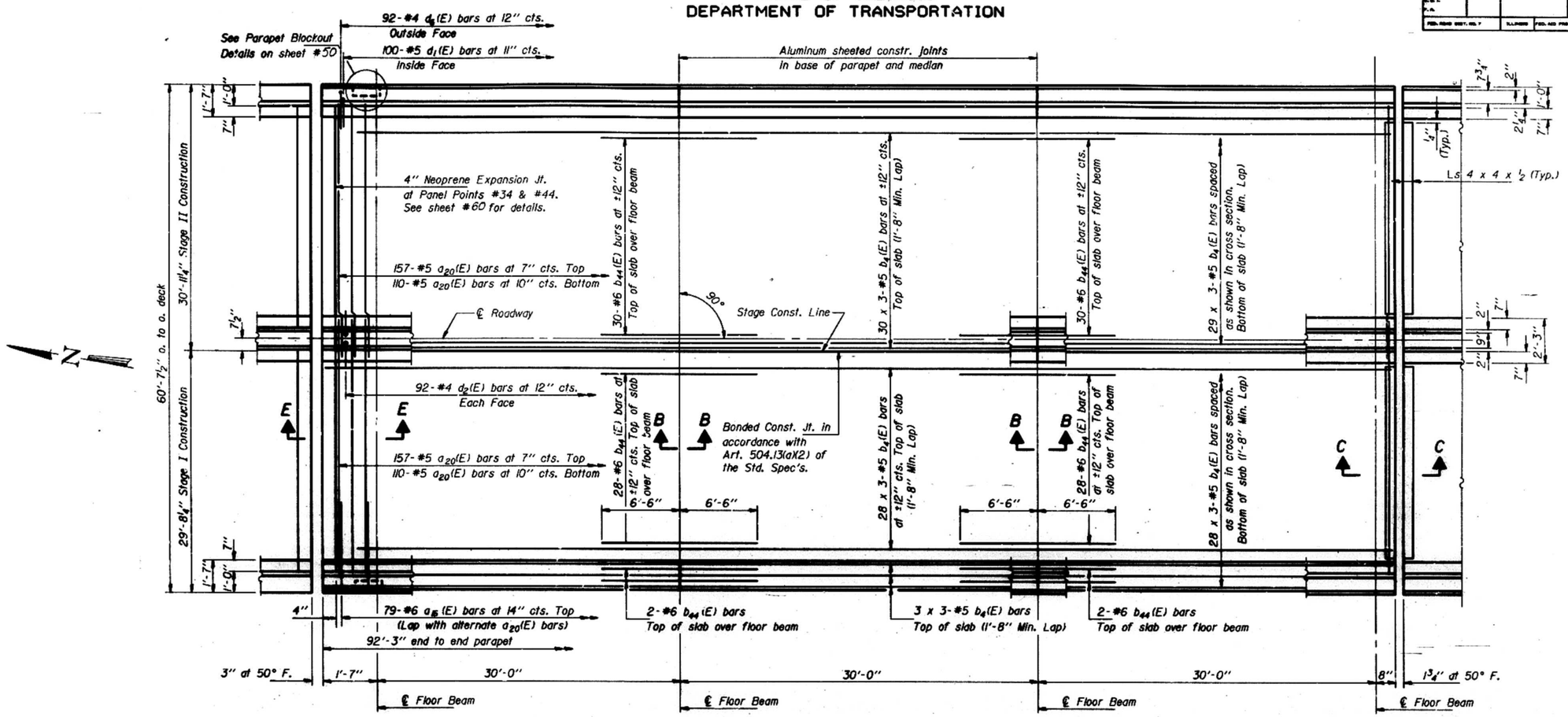


PLAN

Notes: See sheets #45 thru #51 for superstructure details and Bill of Material.
Reinforcement bars designated (E) shall be epoxy coated.
Bars indicated thus 20 x 3-#5 etc. indicates 20 lines of bars with 3 lengths per line.
See sheet #36 for Cross Section.
See sheets #34 and #51 for Drainage Scupper and Floor Drain details and locations.

| | |
|---|---|
| DESIGNED | Patrick M. Petrine |
| CHECKED | A. L. Ernst |
| DRAWN | R. Doty |
| CHECKED | A. L. B. |

Dec. 20 1983

SUPERSTRUCTURE - TRUSS
PLAN SLAB 8
F.A.S. RT. 74 SEC. 100-1
PEORIA-TAZEWELL COUNTIES
STATION 151+85

STATE OF ILLINOIS
DEPARTMENT OF TRANSPORTATION

| ROUTE NO. | SECTION | COUNTY | TOTAL SHEETS | SHEET NO. |
|---|---|---|---|---|
| F.A.I. | | | 136 | 80 |
| FED. ROAD DIST. NO. 7 | ILLINOIS | FED. AID PROJECT- | | |

SHEET NO. SHEETS

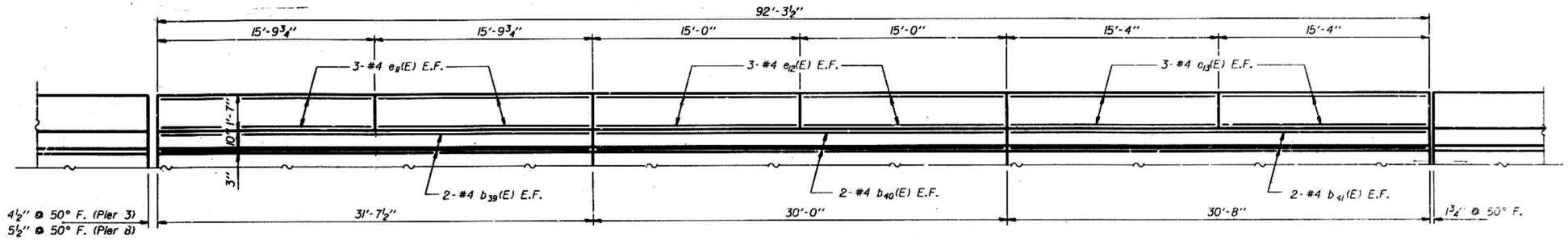


ELEVATION-MEDIAN PARAPET
SLAB 1

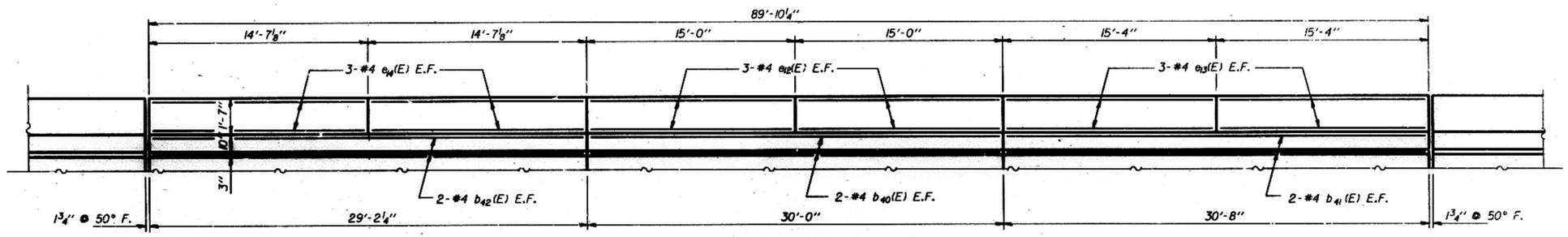


ELEVATION-MEDIAN PARAPET
SLAB 2

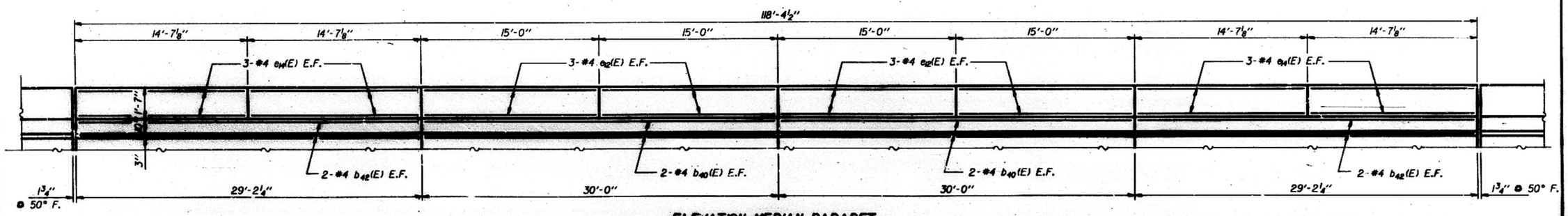


ELEVATION-MEDIAN PARAPET
SLAB 3

| | |
|---|---|
| DESIGNED | Patrick M. Petrone |
| CHECKED | A. A. Brown |
| DRAWN | R. Doty |
| CHECKED | A. A. B. |

Dec. 20 1983

SUPERSTRUCTURE DETAILS-TRUSS
F.A.I. RT. 74 SEC. 100-1
PEORIA-TAZEWELL COUNTIES
STATION 151+85

| ROUTE NO. | SECTION | COUNTY | TOTAL SHEETS | SHEET NO. |
|---|---|---|---|---|
| F.A.I. | | | 136 | 81 |
| F.A.S. | | | | |
| F.A.U. | | | | |
| FED. ROAD DIST. NO. 7 | | ILLINOIS | FED. AID PROJ. | |

SHEET NO. 48 OF 75 SHEETS

STATE OF ILLINOIS
DEPARTMENT OF TRANSPORTATION

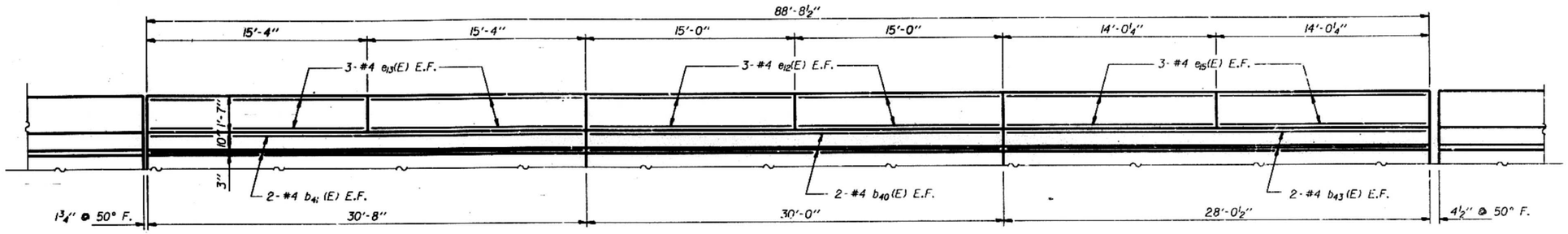


**ELEVATION-MEDIAN PARAPET**
**SLAB 4**

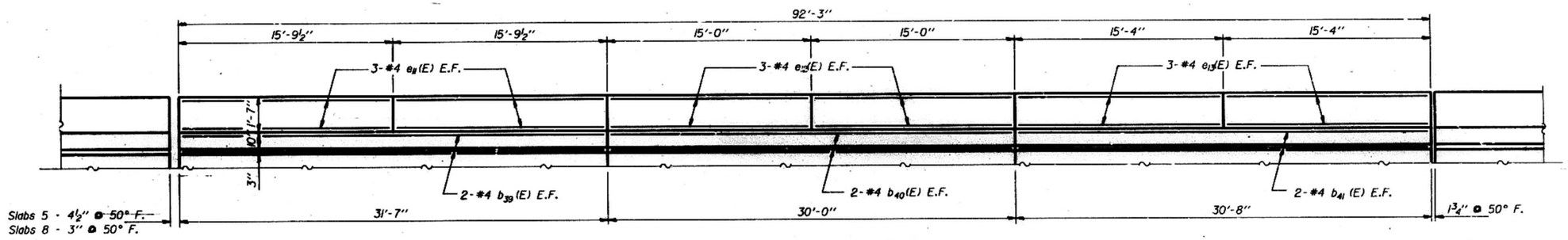


**ELEVATION-MEDIAN PARAPET**
**SLABS 5 & 8**

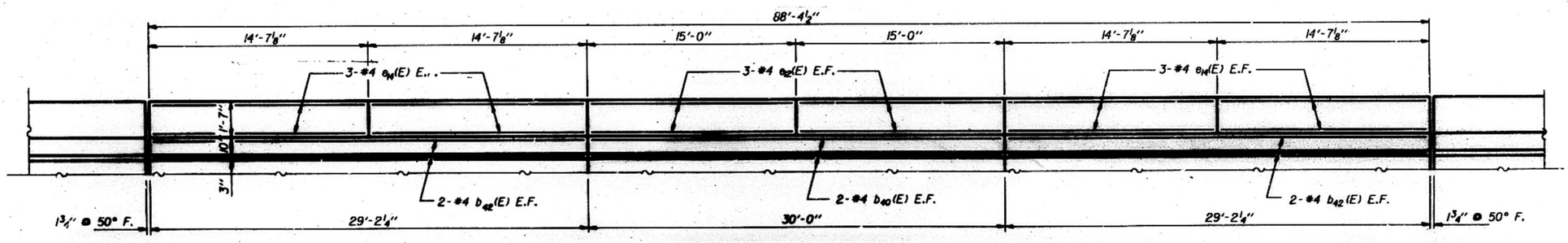


**ELEVATION-MEDIAN PARAPET**
**SLAB 6**

| | |
|---|---|
| DESIGNED | Patrick M Petrine |
| CHECKED | R.L. Brown |
| DRAWN | R. Doty |
| CHECKED | R.S.B. |

Dec. 20 1963

**SUPERSTRUCTURE DETAILS-TRUSS**
**F.A.I. RT. 74 SEC. 100-1**
**PEORIA-TAZEWELL COUNTIES**
**STATION 151+85**

| ROUTE NO. | SECTION | COUNTY | TOTAL SHEETS | SHEET NO. |
|---|---|---|---|---|
| F.A.I. 74 | | | 136 | 82 |

SHEET NO. 4 OF SHEETS

STATE OF ILLINOIS
DEPARTMENT OF TRANSPORTATION

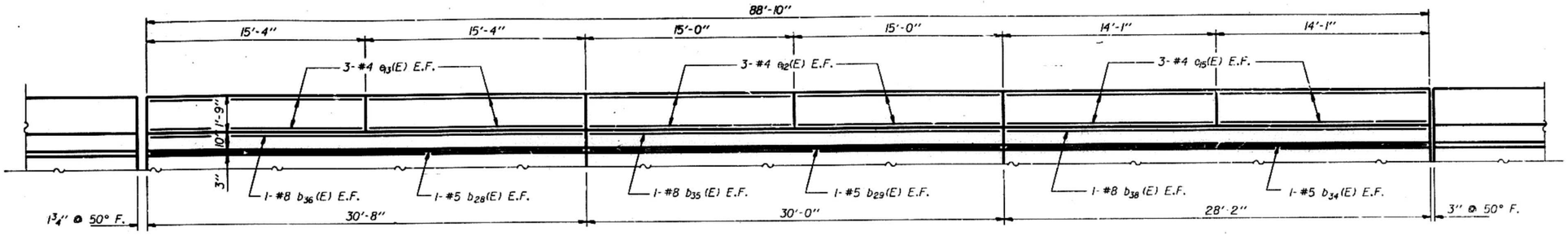


**ELEVATION-PARAPETS**
**SLAB 7**

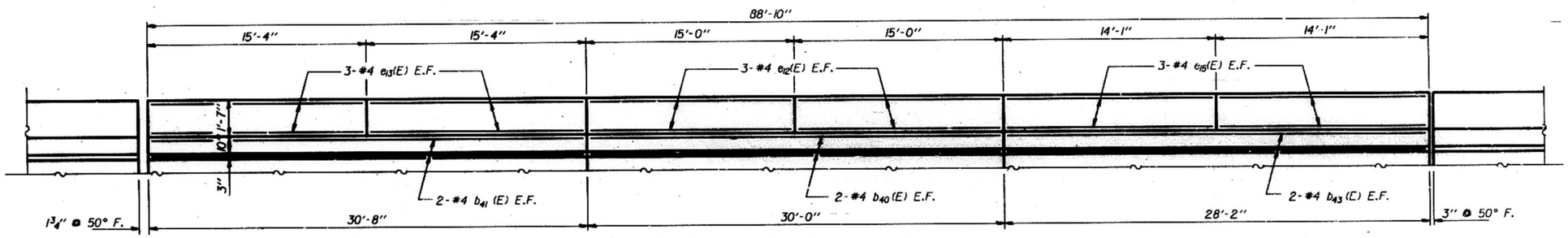


**ELEVATION-MEDIAN PARAPET**
**SLAB 7**

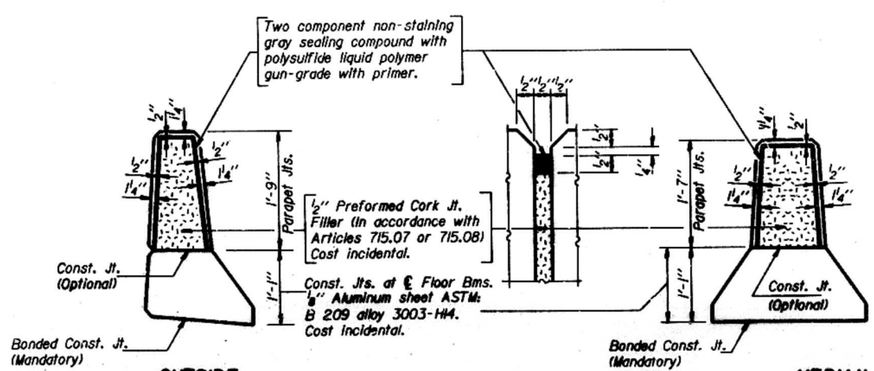


**OUTSIDE PARAPET**

**MEDIAN PARAPET**

**PARAPET JOINT DETAILS**

| | |
|---|---|
| DESIGNED | Patricia M. Petrus |
| CHECKED | L.S. Brown |
| DRAWN | R. Doty |
| CHECKED | L.S.B. |

Dec. 20 1983

**SUPERSTRUCTURE DETAILS-TRUSS**
**F.A.I. RT. 74 SEC. 00-1**
**PEORIA-TAZEWELL COUNTIES**
**STATION 171+85**

STATE OF ILLINOIS
DEPARTMENT OF TRANSPORTATION

| ROUTE NO. | SECTION | COUNTY | TOT. SHEETS | SHEET NO. |
|---|---|---|---|---|
| F.A.I. 74 | | | 136 | 83 |
| FED. ROAD DIST. NO. 7 | ILLINOIS | FED. AID PROJECT- | | |

SHEET NO. 83 OF SHEETS

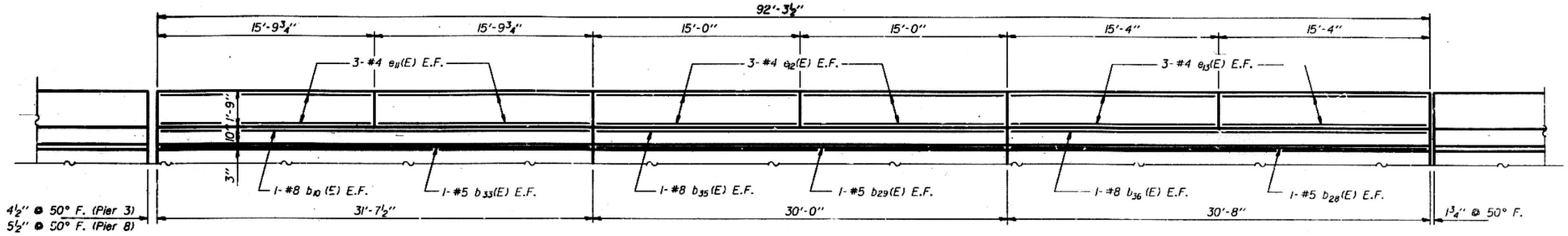


ELEVATION-PARAPET SLAB 1

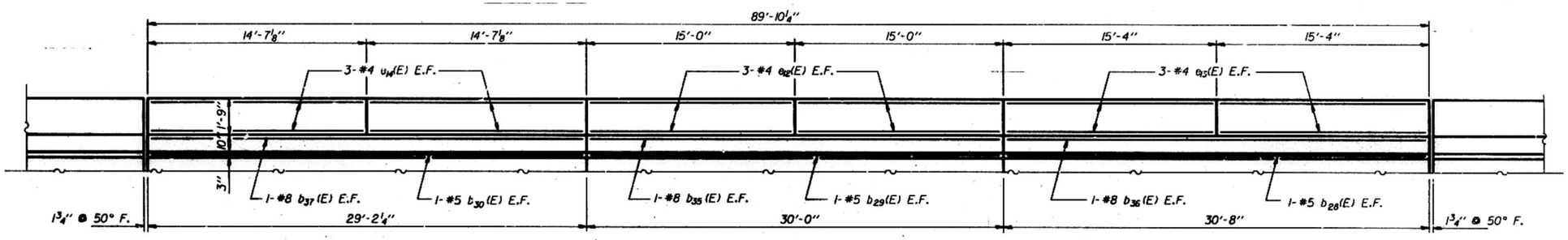


ELEVATION-PARAPET SLAB 2

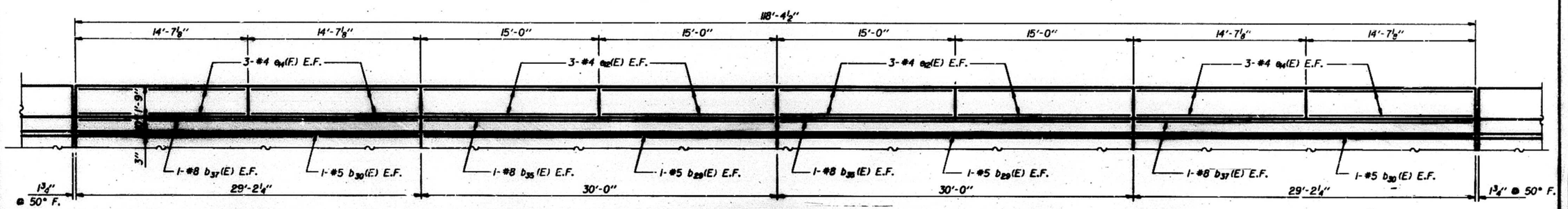


ELEVATION-PARAPET SLAB 3

| | |
|---|---|
| DESIGNED | Patrick M Petrone |
| CHECKED | A. L. Brown |
| DRAWN | R. Daly |
| CHECKED | A. L. B. |

Dec. 20 1983

SUPERSTRUCTURE DETAILS-TRUSS
F.A.I. RT. 74 SEC. 100-1
PEORIA-TAZEWELL COUNTIES
STATION 151+85

| ROUTE NO. | SECTION | COUNTY | TOTAL SHEETS | SHEET NO. |
|---|---|---|---|---|
| S.B.I.R. F.A. | | | 136 | 84 |
| FED. ROAD DIST. NO. 7 | | ILLINOIS | FED. AID PROJECT- | |

SHEET NO. 43
75 SHEETS

STATE OF ILLINOIS
DEPARTMENT OF TRANSPORTATION

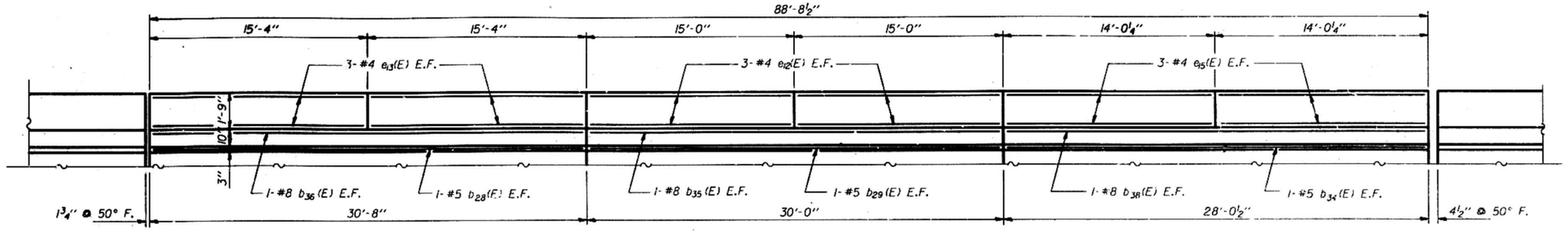


ELEVATION-PARAPET SLAB 4

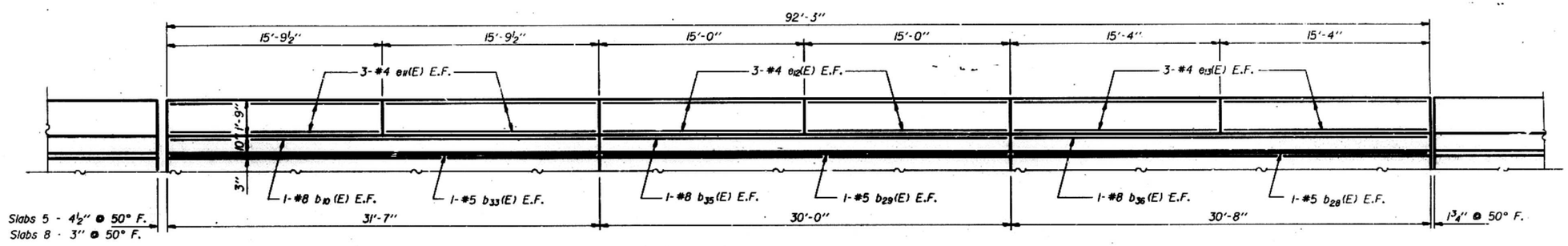


ELEVATION-PARAPET SLABS 5 & 8

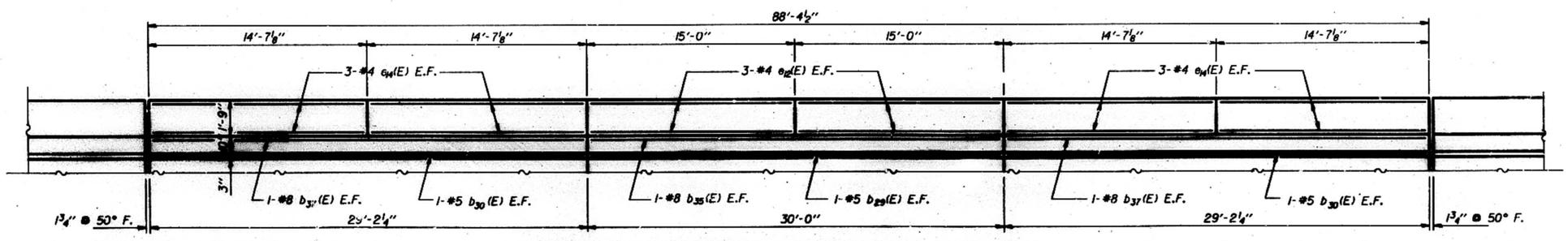


ELEVATION-PARAPET SLAB 6

| | |
|---|---|
| DESIGNED | Patricia M. Petrone |
| CHECKED | A. L. Brown |
| DRAWN | R. Doty |
| CHECKED | A. L. B. |

Dec. 20 1983

SUPERSTRUCTURE DETAILS-TRUSS
F.A.I. RT. 74 SEC. 100-1
PEORIA-TAZEWELL COUNTIES
STATION 151+85

STATE OF ILLINOIS
DEPARTMENT OF TRANSPORTATION

| ROUTE NO. | SECTION | COUNTY | TOTAL SHEETS | SHEET NO. |
|---|---|---|---|---|
| F.A.I. | | | 136 | 85 |
| FED. ROAD DIST. NO. 7 | | ILLINOIS | FED. AID PROJECT- | |

SHEET NO. 1-D
75 SHEETS

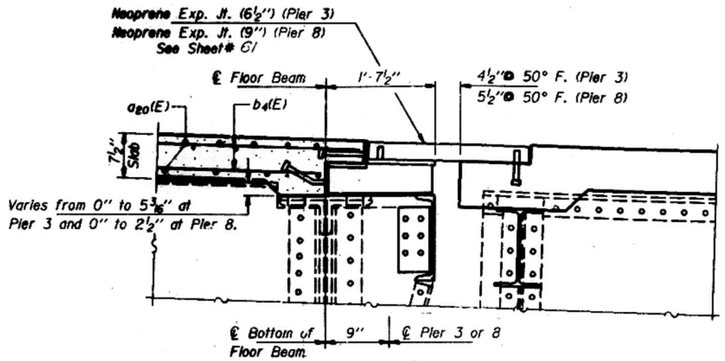


SECTION A-A

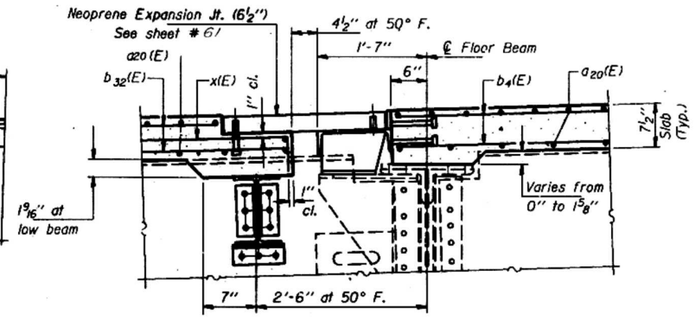


SECTION D-D

Note:
Sections A-A thru E-E are taken from sheets #37 thru #44

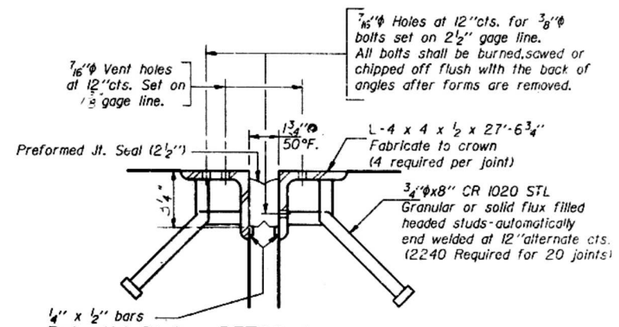


DETAIL A

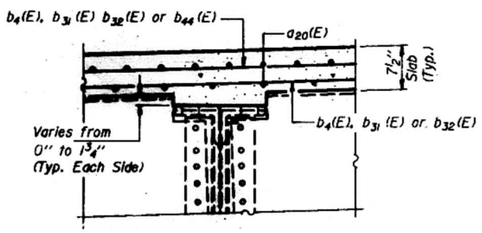


SECTION B-B

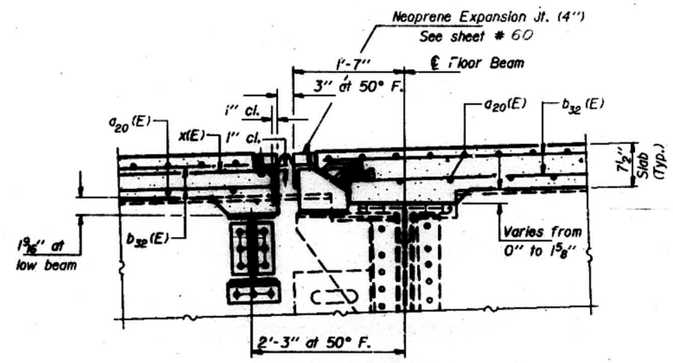


SECTION E-E

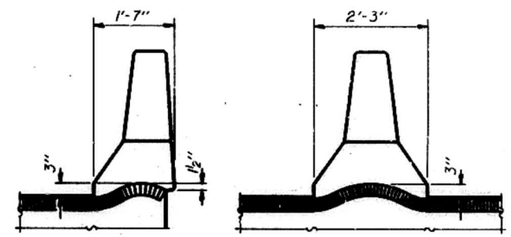


TYPICAL END OF SEAL AND MEDIAN PARAPET TREATMENTS

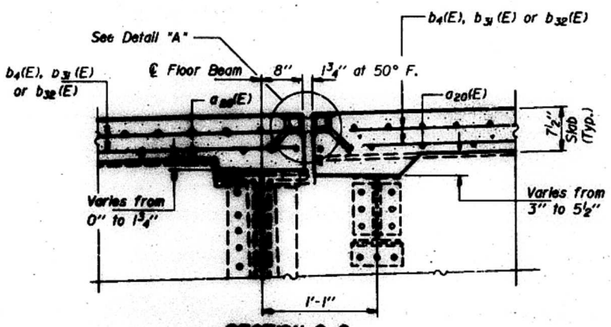


SECTION C-C

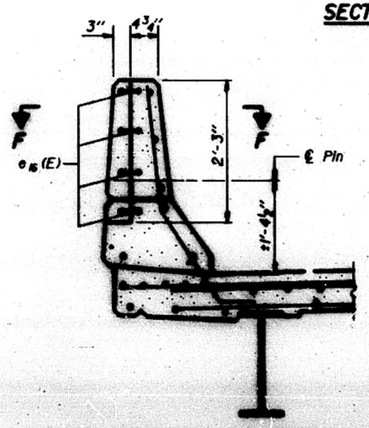


SECTION THRU PARAPET

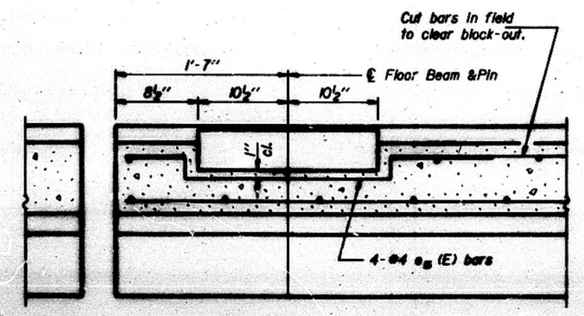


SECTION F-F

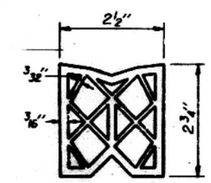


PREFORMED JOINT SEAL (2½")

PARAPET BLOCK-OUT DETAILS
For Floor Plans $L_0$, $L_{31}$, $L_{44}$ & $L_{60}$

Patrick M. Patterson
R. L. Brown
R. Gray
A. L. B.

Dec. 20 1983

SUPERSTRUCTURE DETAILS-TRUSS
F.A.I. RT. 74 SEC. 100-1
PEORIA-TAZEWELL COUNTIES
STATION 151-85

STATE OF ILLINOIS
DEPARTMENT OF TRANSPORTATION

| | | | | | |
|---|---|---|---|---|---|
| | | | 136 | 86 | SHEET NO. 51 / 75 SHEETS |

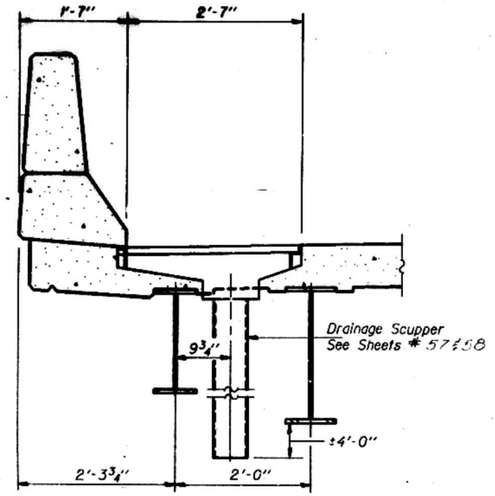


SECTION AT DRAINAGE SCUPPER

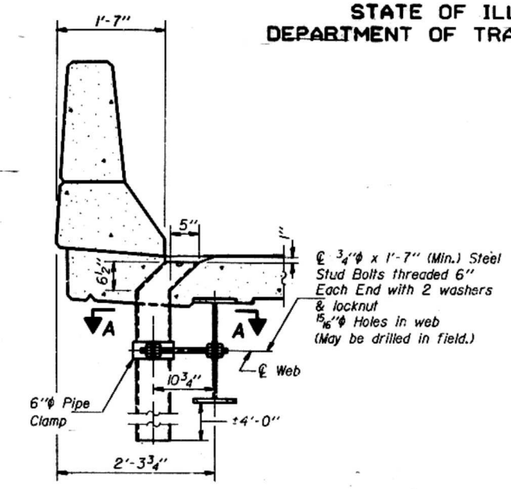


SECTION AT FLOOR DRAIN

* Dimension as required by Pipe Clamp.

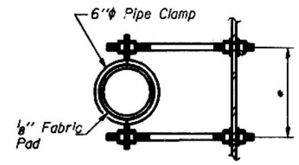


SECTION A-A

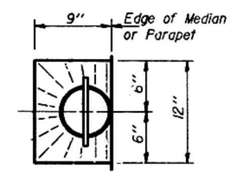


TOP PLAN

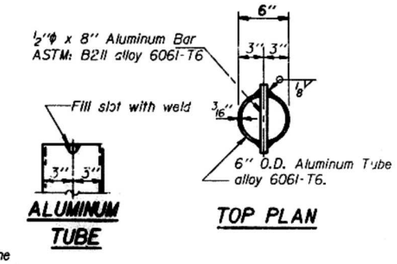


ALUMINUM TUBE

TOP PLAN

Notes:
The exterior surfaces of the Floor Drain shall be painted with the Basic Lead Silico Chromate painting specified for Structural Steel. The exterior surface of the Aluminum tube shall be cleaned and given a wash coat pretreatment in accordance with Steel Structural Painting Council's Spec. SSPC-SP1 & SSPC-Paint 27 prior to painting.
Drains shall be located clear of all diaphragms and floor beams.

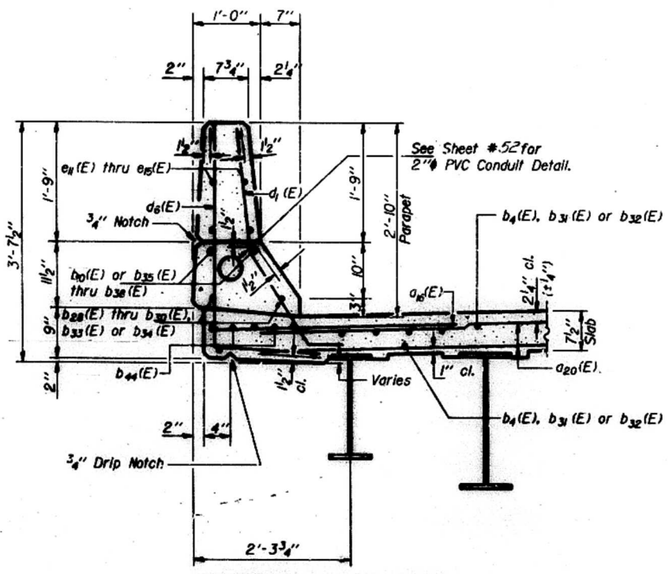


SECTION THRU PARAPET

For Drainage Scuppers and Floor Drains see sections above.

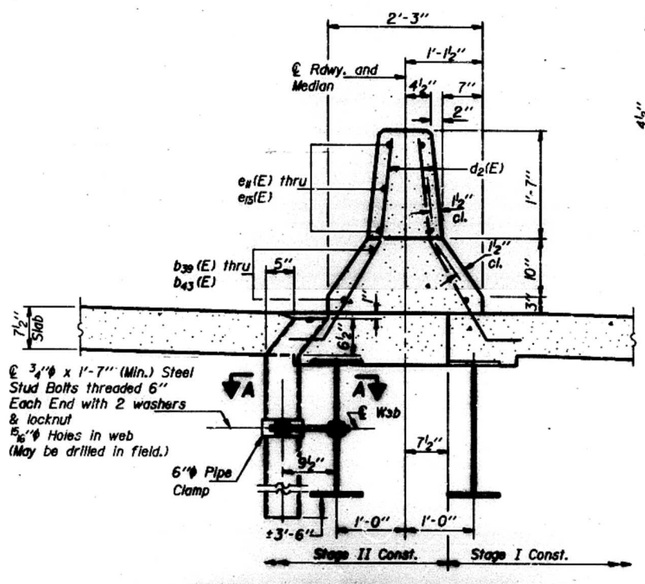


SECTION THRU MEDIAN PARAPET AT FLOOR DRAIN

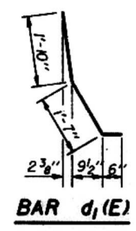


BAR $d_1$(E)

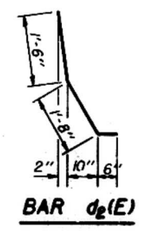


BAR $d_2$(E)

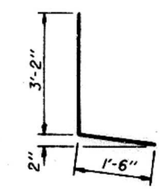


BAR $d_8$(E)

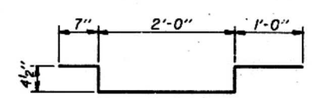


BAR $e_{16}$(E)

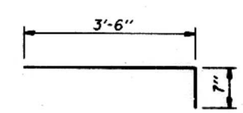


BAR x(E)

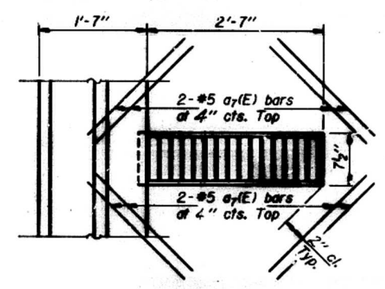


DETAIL "A"

Note: Detail "A" is from sheet #54

## SUPERSTRUCTURE BILL OF MATERIAL

| Bar | No. | Size | Length | Shape |
|---|---|---|---|---|
| $a_7$(E) | 936 | #5 | 2'-0" | |
| $a_{16}$(E) | 4036 | #6 | 4'-0" | |
| $a_{20}$(E) | 13,668 | #5 | 30'-0" | |
| | | | | |
| | | | | |
| $b_4$(E) | 2178 | #5 | 31'-8" | |
| $b_{10}$(E) | 24 | #8 | 31'-4" | |
| $b_{28}$(E) | 80 | #5 | 30'-4" | |
| $b_{29}$(E) | 112 | #5 | 29'-9" | |
| $b_{30}$(E) | 80 | #5 | 29'-0" | |
| $b_{31}$(E) | 5082 | #5 | 31'-0" | |
| $b_{32}$(E) | 2178 | #5 | 30'-9" | |
| $b_{33}$(E) | 24 | #5 | 31'-3" | |
| $b_{34}$(E) | 16 | #5 | 27'-10" | |
| $b_{35}$(E) | 112 | #8 | 29'-9" | |
| $b_{36}$(E) | 80 | #8 | 30'-4" | |
| $b_{37}$(E) | 80 | #8 | 29'-0" | |
| $b_{38}$(E) | 16 | #8 | 27'-10" | |
| $b_{39}$(E) | 24 | #4 | 31'-4" | |
| $b_{40}$(E) | 112 | #4 | 29'-9" | |
| $b_{41}$(E) | 80 | #4 | 30'-4" | |
| $b_{42}$(E) | 80 | #4 | 29'-0" | |
| $b_{43}$(E) | 16 | #4 | 27'-10" | |
| $b_{44}$(E) | 3286 | #6 | 13'-0" | |
| | | | | |
| $d_1$(E) | 5120 | #5 | 3'-11" | |
| $d_2$(E) | 4706 | #4 | 3'-8" | |
| $d_8$(E) | 4706 | #4 | 4'-8" | |
| | | | | |
| $e_8$(E) | 216 | #4 | 15'-6" | |
| $e_{12}$(E) | 1008 | #4 | 14'-9" | |
| $e_{13}$(E) | 720 | #4 | 15'-1" | |
| $e_{14}$(E) | 720 | #4 | 14'-4" | |
| $e_{15}$(E) | 144 | #4 | 13'-9" | |
| $e_{16}$(E) | 32 | #4 | 4'-4" | |
| | | | | |
| x(E) | 224 | #5 | 4'-1" | |
| | | | | |
| Reinforcement Bars (Epoxy Coated) | | | Lbs. | 940,570 |
| Class X Concrete | | | Cu. Yds. | 4,121 |

Reinforcement bars designated (E) shall be epoxy coated.

| | |
|---|---|
| Patrick M. Prine | Dec. 20 '83 |
| R. L. Gibson | |
| Jon Rutenbeck | |
| R. S. B. | |

SUPERSTRUCTURE DETAILS-TRUSS
F.A.I. 74 SEC. 100-1
PEORIA-TAZEWELL COUNTIES
STATION 64+85

# STATE OF ILLINOIS
# DEPARTMENT OF TRANSPORTATION

| ROUTE NO | SECTION | COUNTY | TOTAL SHEETS | SHEET NO |
|---|---|---|---|---|
| F.A.I. | | | 136 | 99 |
| FED. ROAD DIST. NO. 7 | | ILLINOIS | FED. AID PROJECT: | |

SHEET NO 75 SHEETS

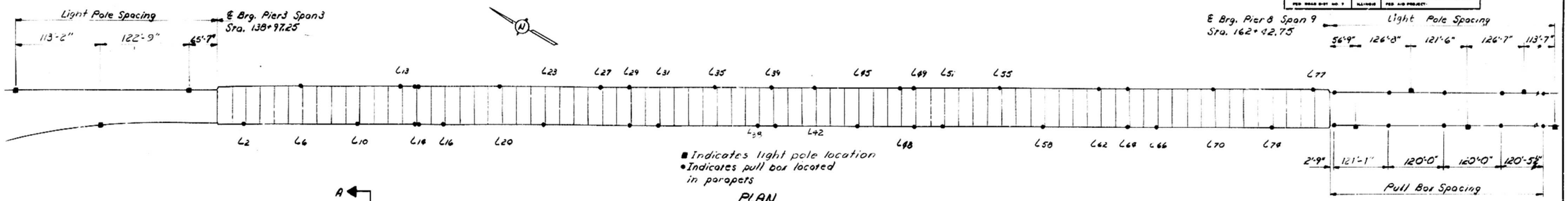


■ Indicates light pole location
• Indicates pull box located in parapets

PLAN

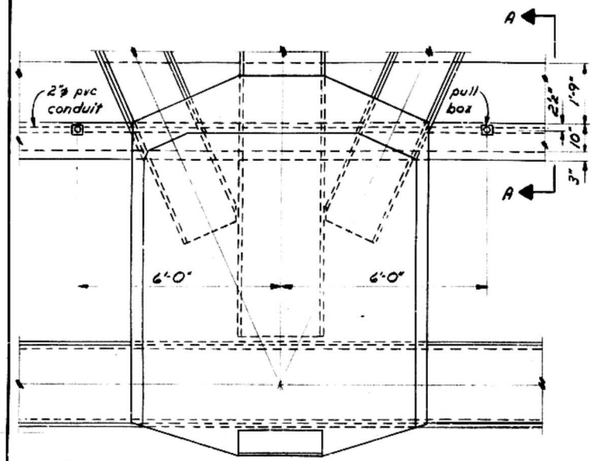


DETAIL OF INSTALLATION AT L14

Note: Installation is similar at L29, L49 and L64 except that the boxes on the South side of vertical members are omitted.

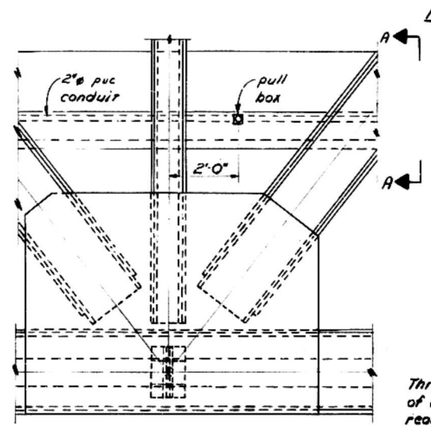


TYPICAL INSTALLATION AT ALL VERTICAL MEMBERS EXCEPT AS NOTED

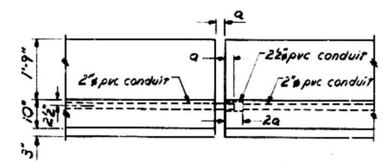


TYPICAL DETAIL @ EXPANSION JOINTS

NOTE:

For Truss: At L39 place pull box on East side of bridge 11'-6" North of center line of vertical member L39 and on West side of bridge 11'-6" South of center line of vertical member L39. Each pull box indicated on the above layout is to be placed approximately 2'-0" North of the center line of the nearest vertical member indicated with the following exceptions: At L14 place each pull box approximately 6'-0" each side of the center line of the vertical member. At L29, L49, and L64 each of the pull boxes shall be placed 6'-0" North of the center line of their respective vertical member.

For Approach Spans: No pull boxes required at new light poles. Ten pull boxes are required at South approach for navigational lights. Total number of pull boxes required = 44.

Class X Concrete, Bars d7(E) & d8(E) are billed on Sts. = 24 & 33

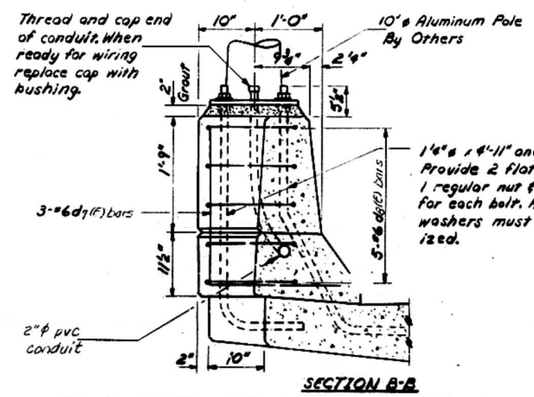


SECTION B-B

Note: Grout Mixture shall consist of 1 part sand, 1 part cement & 1 part chips (pea gravel). The grout shall contain water for a 1" slump, cost incidental to pole.

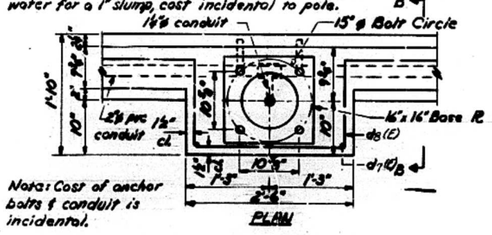


Note: Cost of anchor bolts & conduit is incidental.

PLAN

LIGHT POLE MOUNTED ON CONCRETE PARAPET (Approaches)

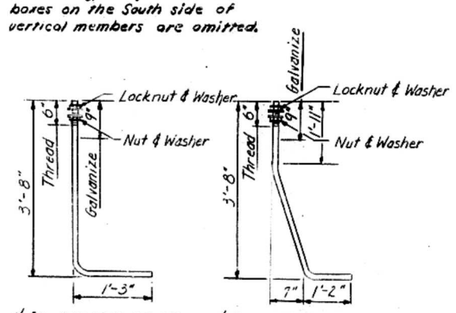


1¼"ϕ ANCHOR BOLTS  1¼"ϕ ANCHOR BOLTS

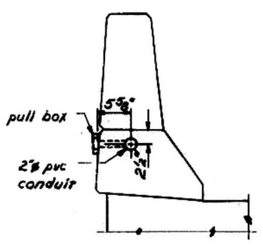


SECTION A-A

| | |
|---|---|
| DESIGNED | Patricia M Petrus |
| CHECKED | JIM KOHOUT |
| DRAWN | MC |
| CHECKED | JK |

Dec. 20 1983

EXAMINED
PASSED
APPROVED

2"ϕ PVC CONDUIT, LIGHT POLE & PULL BOX LOCATIONS
F.A.I. ROUTE 74 - SECTION 100-1
PEORIA-TAZEWELL COUNTIES
STA. 151+85.00

STATE OF ILLINOIS
DEPARTMENT OF TRANSPORTATION

| ROUTE NO. | SECTION | COUNTY | TOTAL SHEETS | SHEET NO. |
|---|---|---|---|---|
| S.B.I.R. F.A. | | | 136 | 100 |
| FED. ROAD DIST. NO. 7 | | ILLINOIS | VER. 1.00 PROJECT- | |

SHEET NO. 53
75 SHEETS

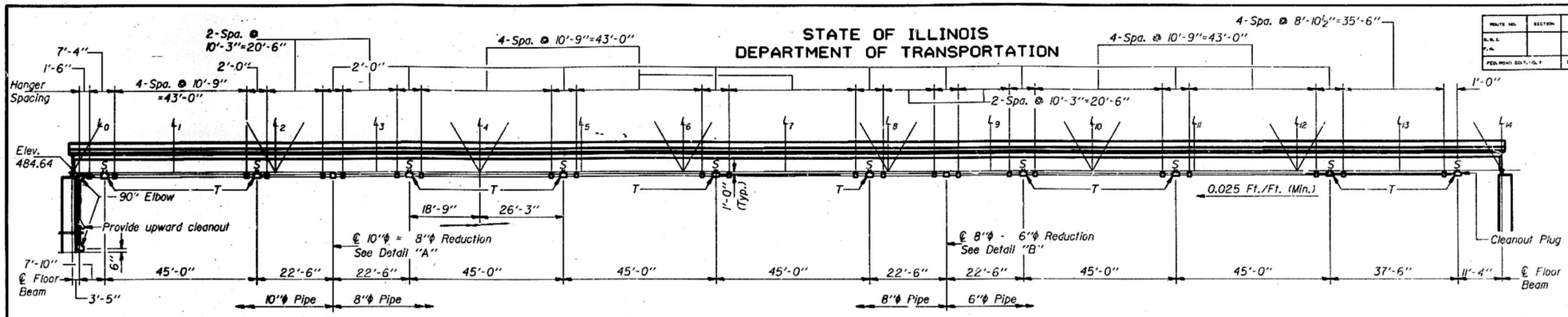


## WEST SIDE DRAINAGE SYSTEM ($L_0$ THRU $L_4$)

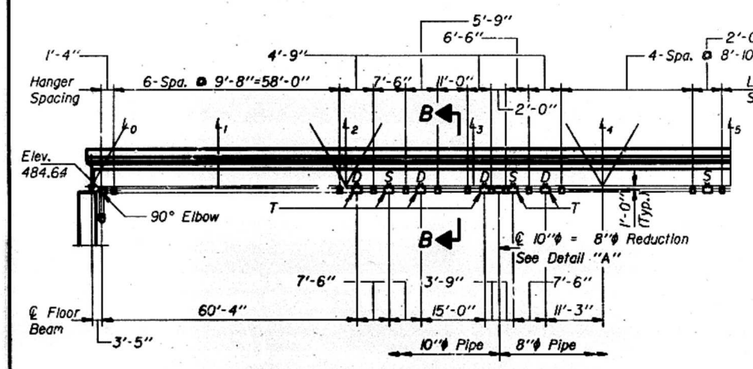


## EAST SIDE DRAINAGE SYSTEM ($L_0$ THRU $L_4$)

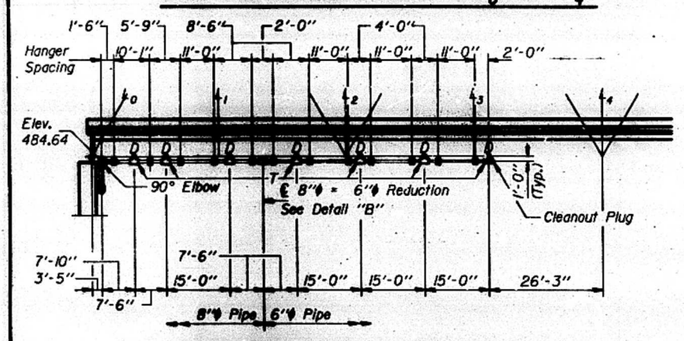


## MEDIAN DRAINAGE SYSTEM ($L_0$ THRU $L_4$)

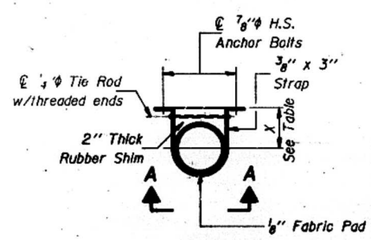


## PLAN

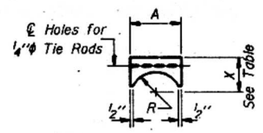


## RUBBER SHIM DETAIL

| Strap | A | B | R | X | No. Req'd. |
|---|---|---|---|---|---|
| Type 1 | 1'-0¾" | 1'-1½" | 6⅜" | 7½" | 4 |
| Type 2 | 6⅝" | 7⅜" | 3 5/16" | 4½" | 5 |
| | | | | | |
| | | | | | |

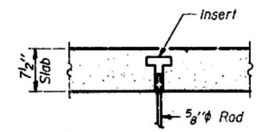


## CONCRETE SLAB

## INSERT DETAILS

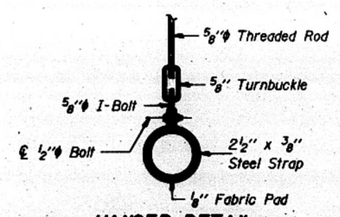


## HANGER DETAIL

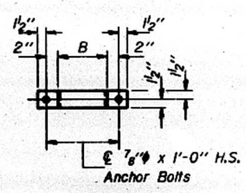


## VIEW A-A

## NOTES

Work this sheet with sheet #54.

All pipes and fittings shall be fiberglass pipe meeting the requirements of A.S.T.M. D-2996 with short time rupture strength hoop tensile stress of 30,000 psi min.

All steel hardware such as hangers, straps, and bolts shall conform to the requirements of A.S.T.M. A-307.

All High Strength Bolts and Anchor Bolts shall meet the requirements of A.A.S.T.O. M-164.

Cost of scuppers and downspouts including installation shall be paid for at the unit price of "Drainage Scuppers Special" see sheets #57 & 58.

The surface of the fiberglass pipe shall be free of bond inhibiting agents.

For details of Deck Drains see sheets #51.

Exterior surfaces of the Drainage System above the bearing seat elevations shall be painted with the Basic Lead Silico Chromate painting specified for Structural Steel.

## LEGEND

S: Scupper
D: 6"φ Drain

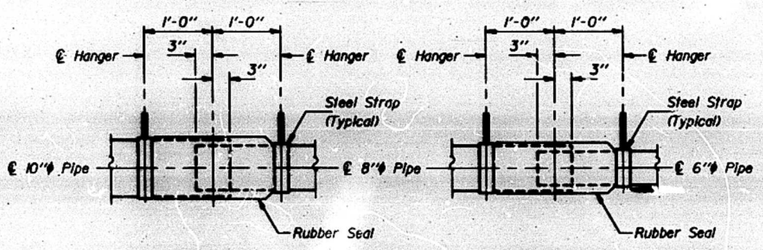


## DETAIL "A"

## DETAIL "B"

| | |
|---|---|
| DESIGNED | Patrick M. Pfannes |
| CHECKED | Jim Kohout |
| DRAWN | John F. Schneller Jr. |
| CHECKED | J.K. |

DIRECTOR OF HIGHWAYS

**DRAINAGE SYSTEM**
**TRUSS PANELS $L_1$ THRU $L_{17}$**
**F.A.I. RT. 74 SEC. 10D-1**
**PEORIA-TAZEWELL COUNTIES**
**STA. 151+85**

STATE OF ILLINOIS
DEPARTMENT OF TRANSPORTATION

| ROUTE NO. | SECTION | COUNTY | TOTAL SHEETS | SHEET NO. |
|---|---|---|---|---|
| S.B.I.R. F.A. | | | 136 | 101 |
| FED. ROAD DIST. NO. 7 | | ILLINOIS | FED. AID PROJECT | |

SHEET NO. 54
SHEETS

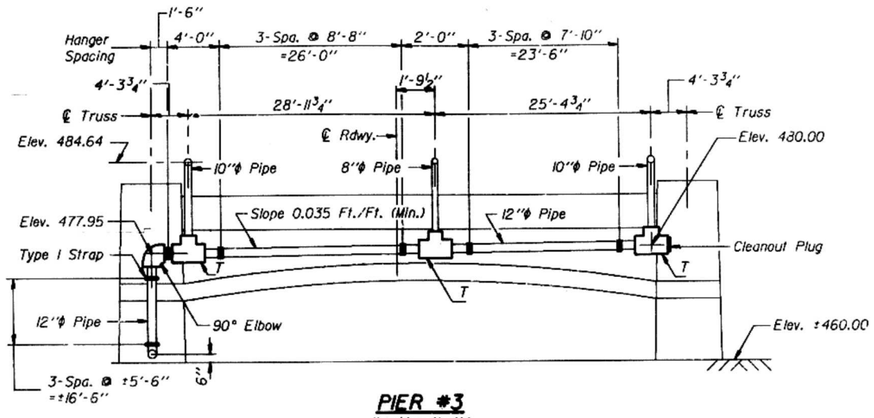


**PIER #3**
(Looking North)

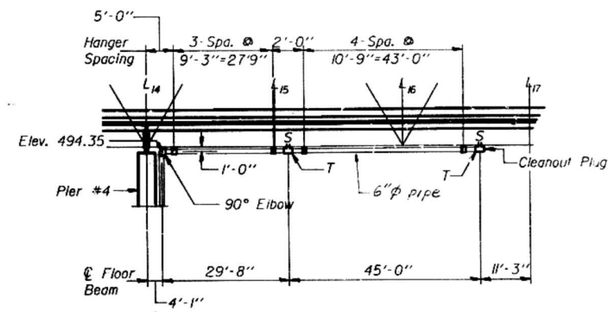


**EAST & WEST SIDE DRAINAGE SYSTEM ($L_{14}$ THRU $L_{17}$)**

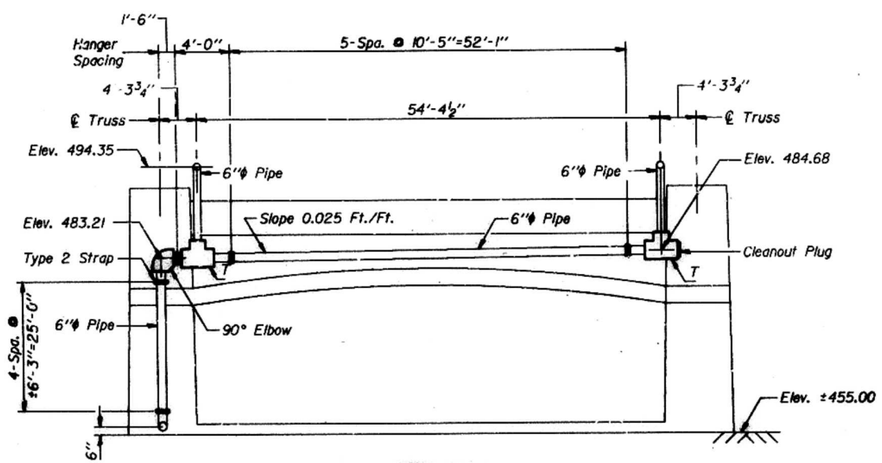


**PIER #4**
(Looking North)

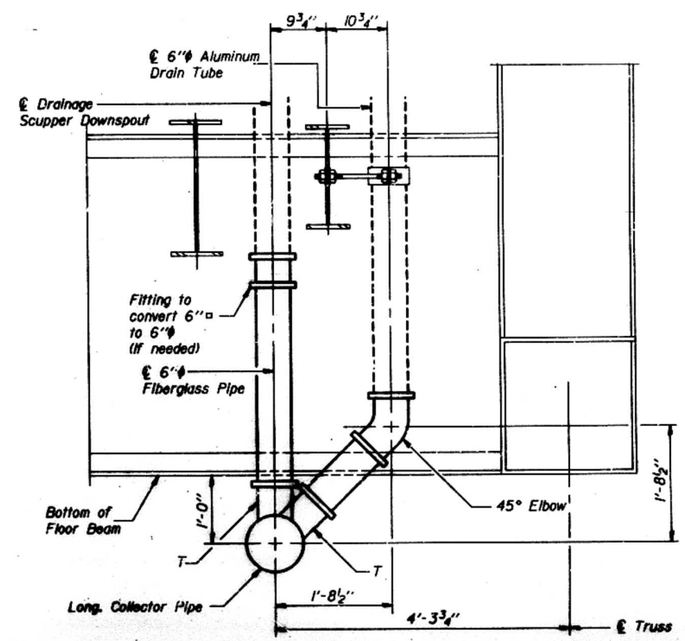


**VIEW B-B**
(Looking North)

| | |
|---|---|
| DESIGNED | Patrick M. Stone |
| CHECKED | Jim Kohout |
| DRAWN | John F. Schneller Jr. |
| CHECKED | JK |

Dec. 20 83

**DRAINAGE SYSTEM**
**TRUSS PANELS $L_1$ THRU $L_2$**
**F.A.I. RT. 74 SEC. 60-1**
**PEORIA-TAZEWELL COUNTIES**
**STA. 69+85**

STATE OF ILLINOIS
DEPARTMENT OF TRANSPORTATION

| ROUTE NO. | SECTION | COUNTY | TOTAL SHEETS | SHEET NO. |
|---|---|---|---|---|
| S. B. I. C. F. A. | | | 136 | 102 |
| FED. ROAD DIST. NO. 7 | ILLINOIS | FED. AID PROJECT- | | |

SHEET NO. 75 SHEETS

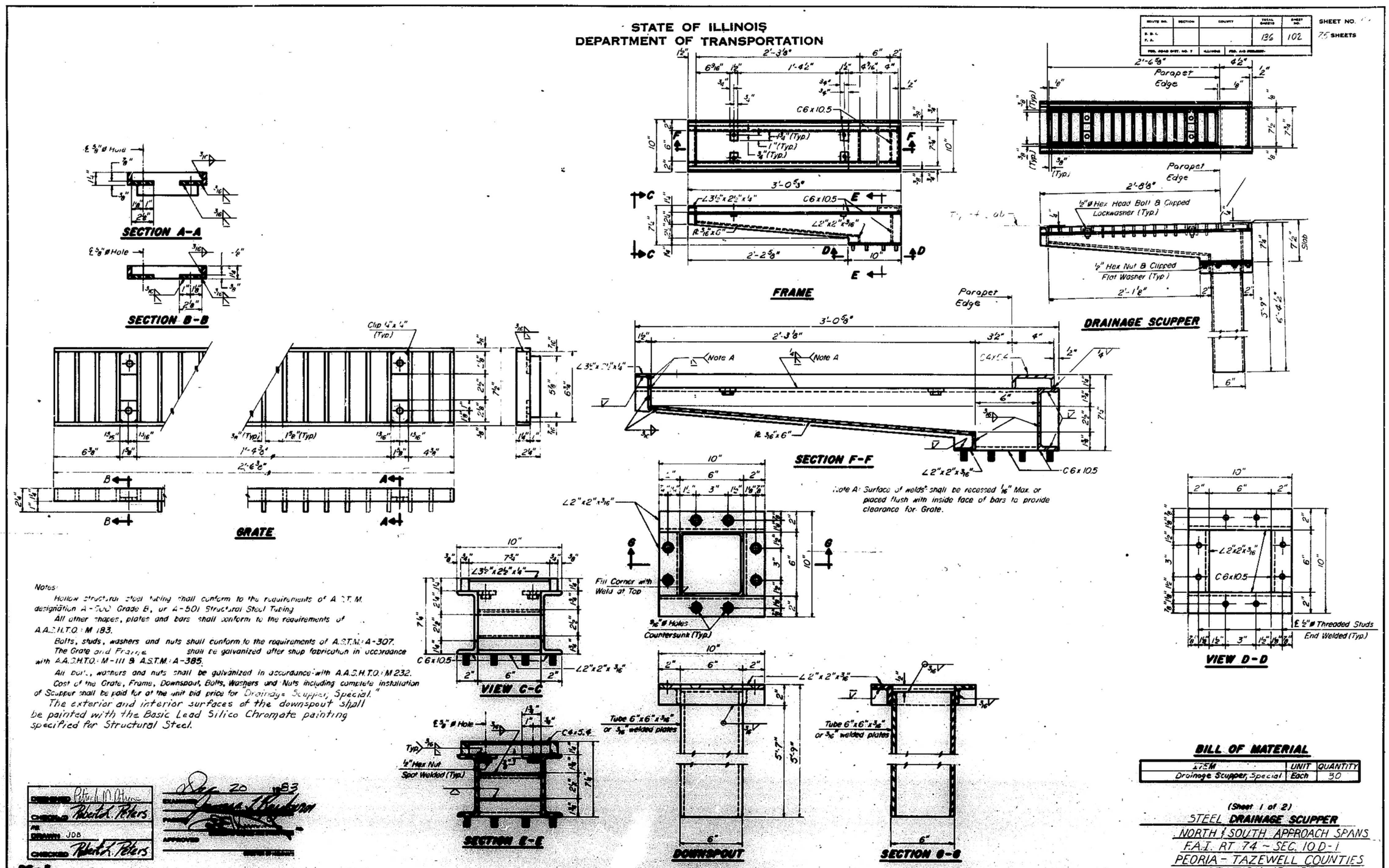


Notes:

Hollow structural steel tubing shall conform to the requirements of A.S.T.M. designation A-500 Grade B, or A-501 Structural Steel Tubing.

All other shapes, plates and bars shall conform to the requirements of A.A.S.H.T.O. M 183.

Bolts, studs, washers and nuts shall conform to the requirements of A.S.T.M. A-307.

The Grate and Frame shall be galvanized after shop fabrication in accordance with A.A.S.H.T.O. M-111 & A.S.T.M. A-385.

All bolts, washers and nuts shall be galvanized in accordance with A.A.S.H.T.O. M 232.

Cost of the Grate, Frame, Downspout, Bolts, Washers and Nuts including complete installation of Scupper shall be paid for at the unit bid price for "Drainage Scupper, Special."

The exterior and interior surfaces of the downspout shall be painted with the Basic Lead Silico Chromate painting specified for Structural Steel.

**BILL OF MATERIAL**

| ∆75M | UNIT | QUANTITY |
|---|---|---|
| Drainage Scupper, Special | Each | 30 |

(Sheet 1 of 2)

STEEL **DRAINAGE SCUPPER**
NORTH & SOUTH APPROACH SPANS
F.A.I. RT. 74 ~ SEC. 10 D-1
PEORIA - TAZEWELL COUNTIES
STATION 151 + 85

DESIGNED Peter A. M. Olive
CHECKED Robert A. Peters
DRAWN JDB
CHECKED Robert A. Peters
Sep 20 1983
APPROVED

DS-3 4-12-77 (W.T. to inside of exterior stringer flange shall not be > 3'-11")

| ROUTE NO. | SECTION | COUNTY | TOTAL SHEETS | SHEET NO. |
|---|---|---|---|---|
| F.A.I. | | | 136 | 103 |

SHEET NO. 75 SHEETS

STATE OF ILLINOIS
DEPARTMENT OF TRANSPORTATION

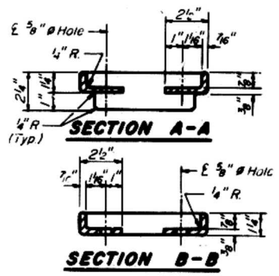


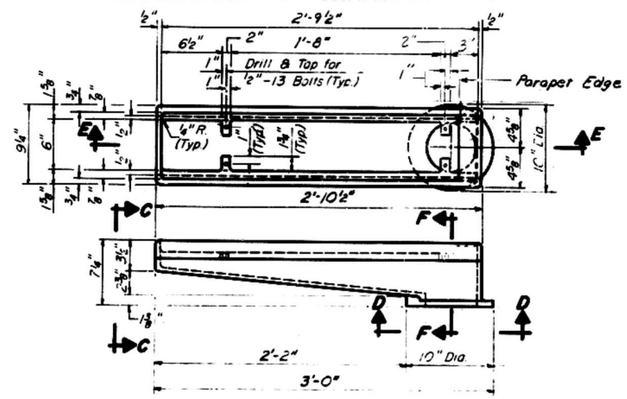


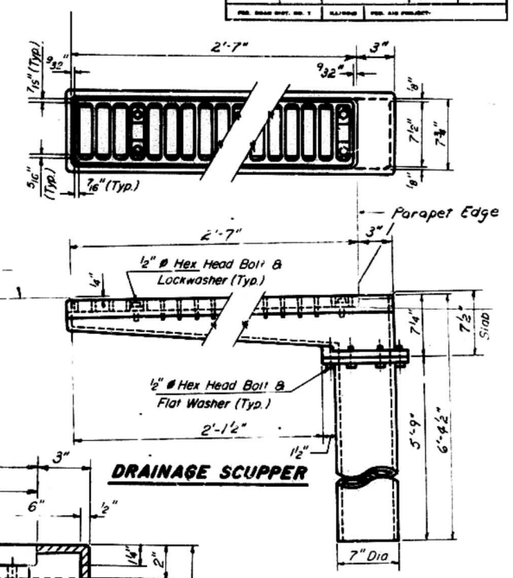


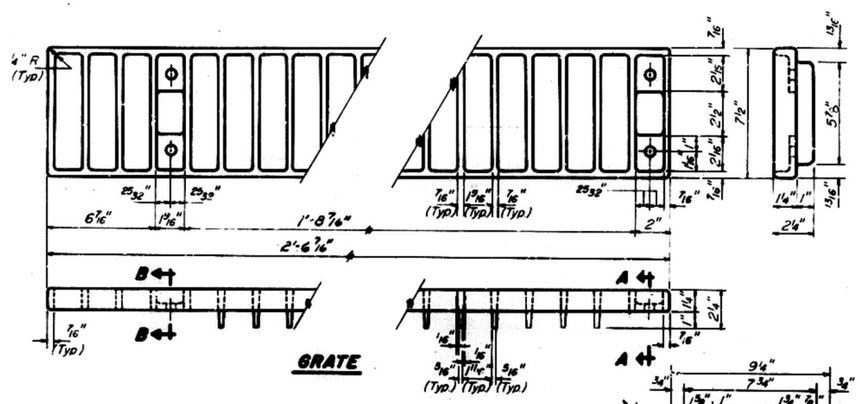


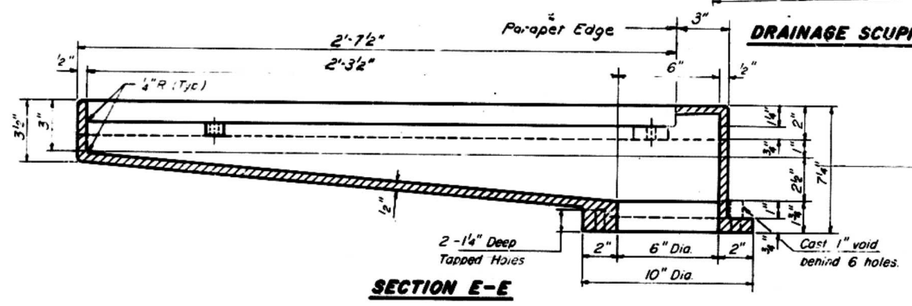


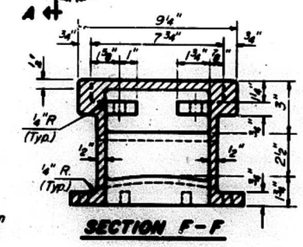


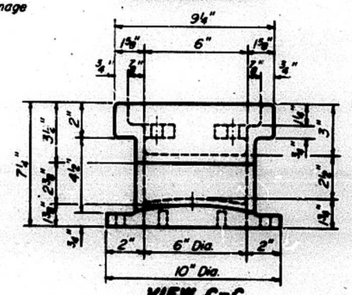


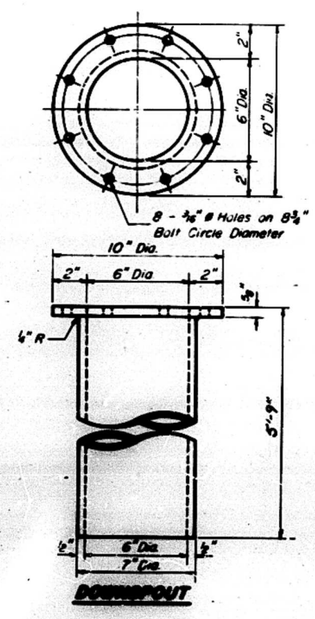


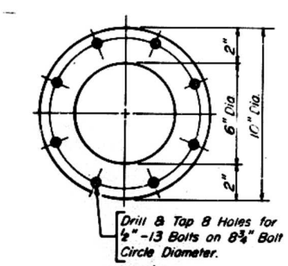


Notes

All cast iron parts shall be gray iron conforming to the requirements of AASHTO M-105, Class 30.

Bolts and washers shall conform to the requirements of A.S.T.M.: A-307.

All bolts and washers shall be galvanized in accordance with A.A.S.H.T.O.: M-232.

As an alternate bolts and washers may be stainless steel conforming to the requirements of A.S.T.M.: A-193, Type 304.

Cost of the Grate, Frame, Downspout, bolts and washers including complete installation of Scupper shall be paid for at the unit bid price for "Drainage Scupper, Special."

The Contractor may use at his option steel drainage scuppers or cast iron drainage scuppers.

| | |
|---|---|
| DESIGNED | Patrick M. Petrone |
| CHECKED | Robert L. Peters |
| PB DRAWN | DB |
| CHECKED | Robert L. Peters |

EXAMINED Dec. 20 '83 James T. Hardesty
PASSED
APPROVED
DIRECTOR OF HIGHWAYS

DS-4 4-21-77 (W.T. to inside of exterior stringer flange shall not be > 3'-11")

(Sheet 2 of 2)

**ALTERNATE - CAST IRON DRAINAGE SCUPPER**

NORTH & SOUTH APPROACH SPANS
F.A.I. RT. 74 - SEC. 10D-1
PEORIA - TAZEWELL COUNTIES
STATION 151+85

STATE OF ILLINOIS
DEPARTMENT OF TRANSPORTATION

| ROUTE NO. | SECTION | COUNTY | TOTAL SHEETS | SHEET NO. |
|---|---|---|---|---|
| | | | 136 | 104 |
| FED. ROAD DIST. NO. 7 | | ILLINOIS | FED. AID PROJECT | |

SHEET NO. 57
75 SHEETS

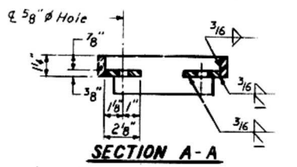


SECTION A-A

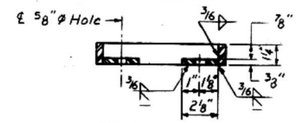


SECTION B-B

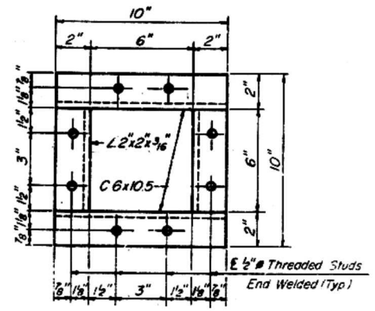


VIEW D-D

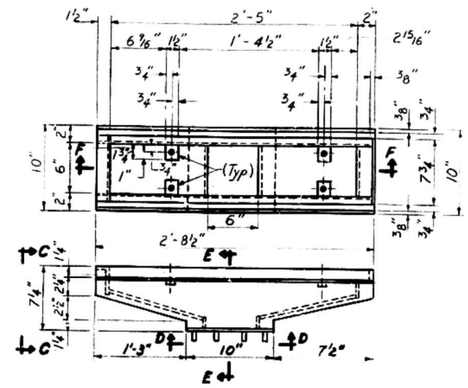


FRAME

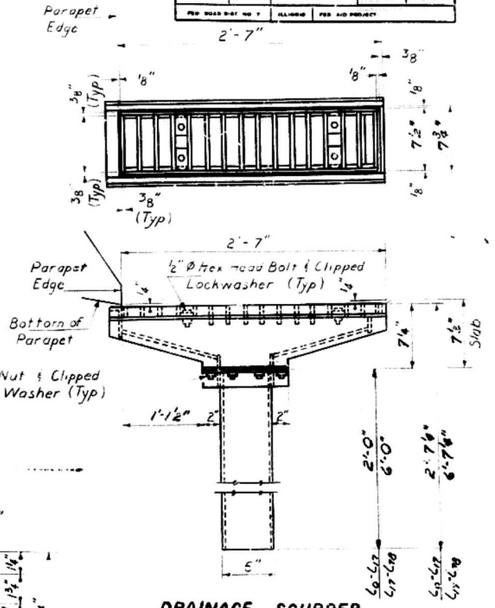


DRAINAGE SCUPPER

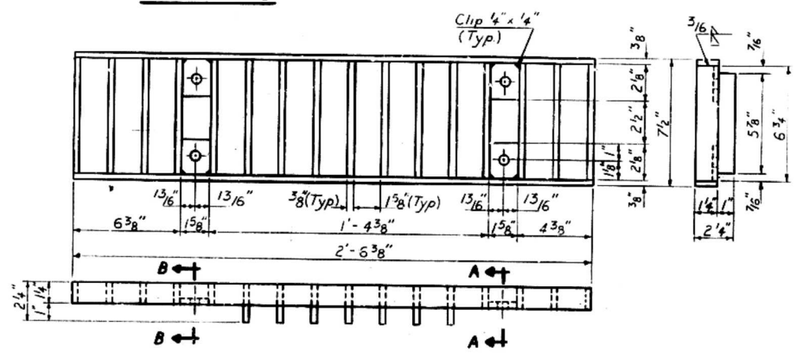


GRATE

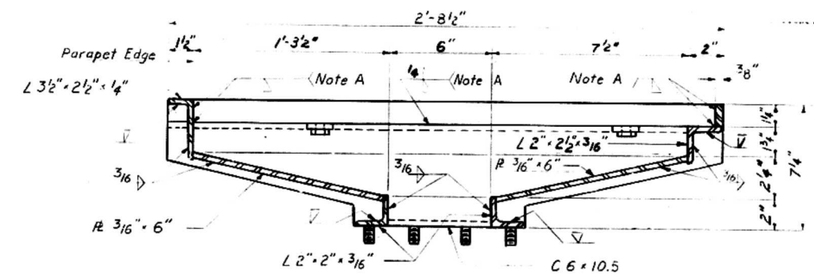


SECTION F-F

Note A: Surface of welds shall be recessed 1/16" Max. or placed flush with inside face of bars to provide clearance for Grate.

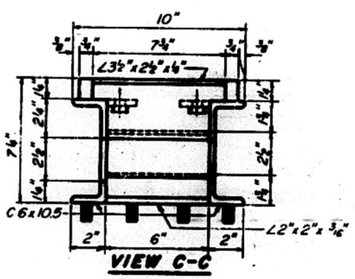


VIEW C-C

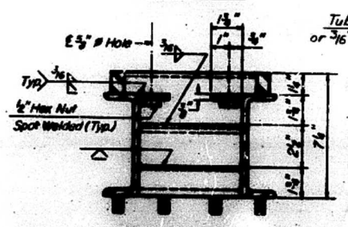


SECTION E-E

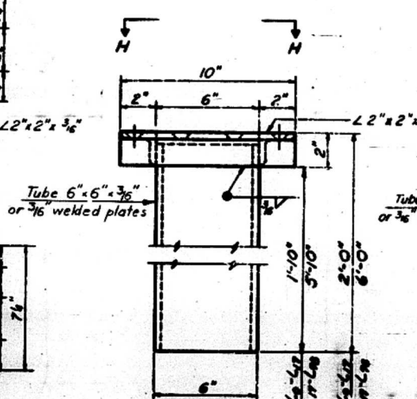


DOWNSPOUT

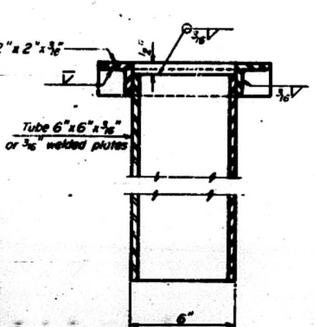


SECTION G-G

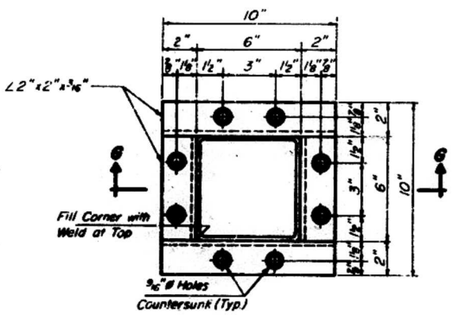


SECTION H-H

Notes:

Hollow structural steel tubing shall conform to the requirements of A.S.T.M. designation A-500 Grade B, or A-501 Structural Steel Tubing.

All other shapes, plates and bars shall conform to the requirements of A.A.S.H.T.O.: M 183.

Bolts, studs, washers and nuts shall conform to the requirements of A.S.T.M.: A-307.

The Grate, Frame, and Downspout shall be galvanized after shop fabrication in accordance with A.A.S.H.T.O.: M-111 & A.S.T.M.: A-385.

All bolts, washers and nuts shall be galvanized in accordance with A.A.S.H.T.O.: M 232.

Cost of the Grate, Frame, Downspout, Bolts, Washers and Nuts including complete installation of Scupper shall be paid for at the unit bid price for "Drainage Scupper, Special."

See sheet #53 for closed drainage system from $L_0$ to $L_{17}$.

| | |
|---|---|
| DESIGNED | Patrick M. Pitsmo |
| CHECKED | Robert L. Peters |
| DRAWN | Jason Gudden |
| CHECKED | Robert L. Peters |

Dec. 20 83

EXAMINED
PASSED
APPROVED
ENGINEER OF DESIGN AND STRUCTURES
DIRECTOR OF HIGHWAYS

BILL OF MATERIAL

| ITEM | UNIT | QUANTITY |
|---|---|---|
| Drainage Scupper, Special | Each | 119 |

(Sheet 1 of 2)

STEEL DRAINAGE SCUPPER

F.A.I. RT. 74 ~ SEC. 10 D-1
PEORIA - TAZEWELL COUNTIES
STATION 151+85

| RT. 74 NO. | SECTION | COUNTY | TOTAL SHEETS | SHEET NO. |
|---|---|---|---|---|
| | | | 136 | 105 |
| FED. ROAD DIST. NO. 7 | ILLINOIS | FED. AID PROJECT | | |

SHEET NO 58
75 SHEETS

STATE OF ILLINOIS
DEPARTMENT OF TRANSPORTATION

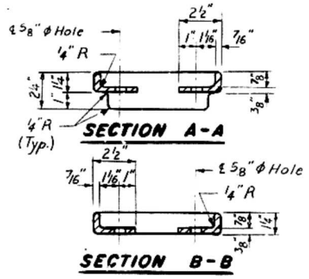


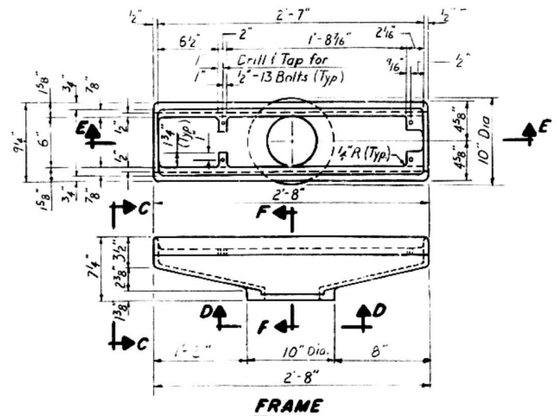


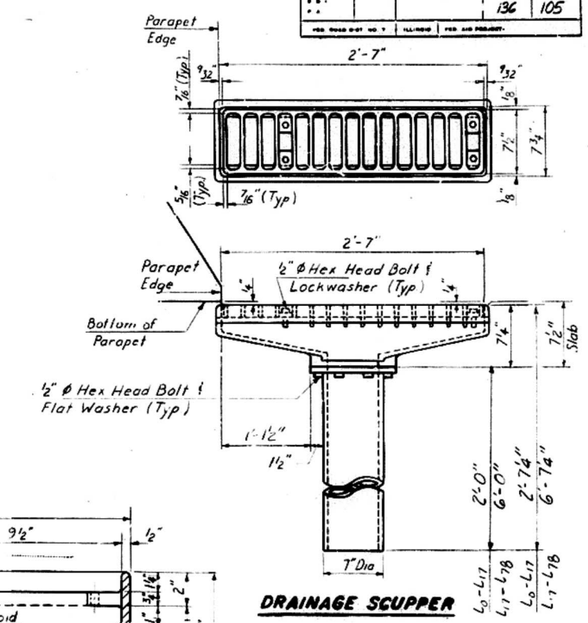


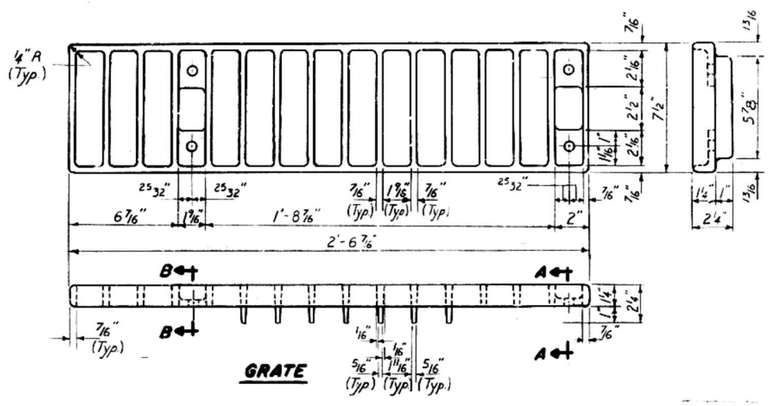


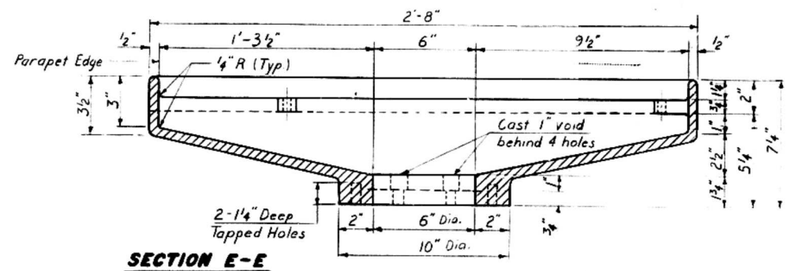


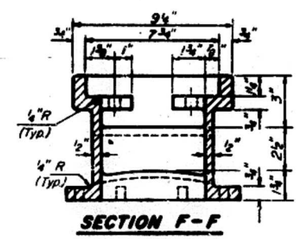


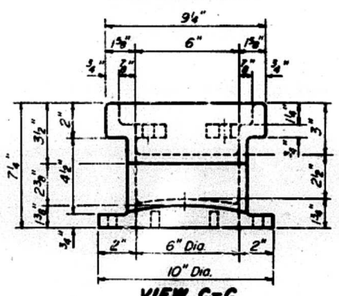


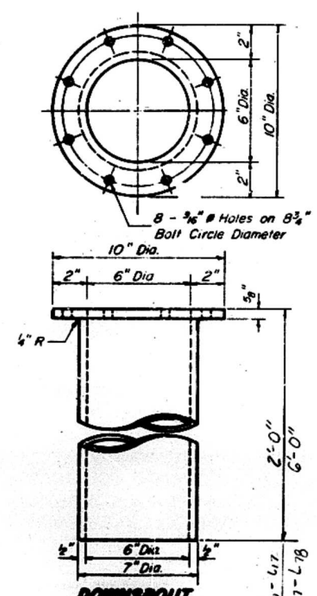


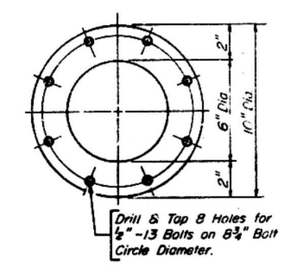


Notes:

All cast iron parts shall be gray iron conforming to the requirements of AASHTO: M-105, Class 30.

Bolts and washers shall conform to the requirements of A.S.T.M.: A-307.

All bolts and washers shall be galvanized in accordance with A.A.S.H.T.O.: M-232.

As an alternate bolts and washers may be stainless steel conforming to the requirements of A.S.T.M.: A-193, Type 304.

Cost of the Grate, Frame, Downspout, bolts and washers including complete installation of Scupper shall be paid for at the unit bid price for "Drainage Scupper, Special"

The Contractor may use at his option steel drainage scuppers or cast iron drainage scuppers.

| | |
|---|---|
| DESIGNED | Patrick M. Attme |
| CHECKED | Robert L. Peters |
| DRAWN | James Buckler |
| CHECKED | Robert L. Peters |

Dec. 20 1963
EXAMINED James J. Markham
PASSED BRIDGES AND STRUCTURES
APPROVED
DIRECTOR OF HIGHWAYS

(Sheet 2 of 2)

ALTERNATE - CAST IRON DRAINAGE SCUPPER

F.A.I. RT. 74 ~ SEC. 10 D-1
PEORIA - TAZEWELL COUNTIES
STATION 151+85

| ROUTE NO. | SECTION | COUNTY | TOTAL SHEETS | SHEET NO. |
|---|---|---|---|---|
| F.A.I. | | | 135 | 107 |
| FED. ROAD DIST. NO. 7 | ILLINOIS | FED. AID PROJECT- | | |

SHEET NO. 59
75 SHEETS

# STATE OF ILLINOIS
# DEPARTMENT OF TRANSPORTATION

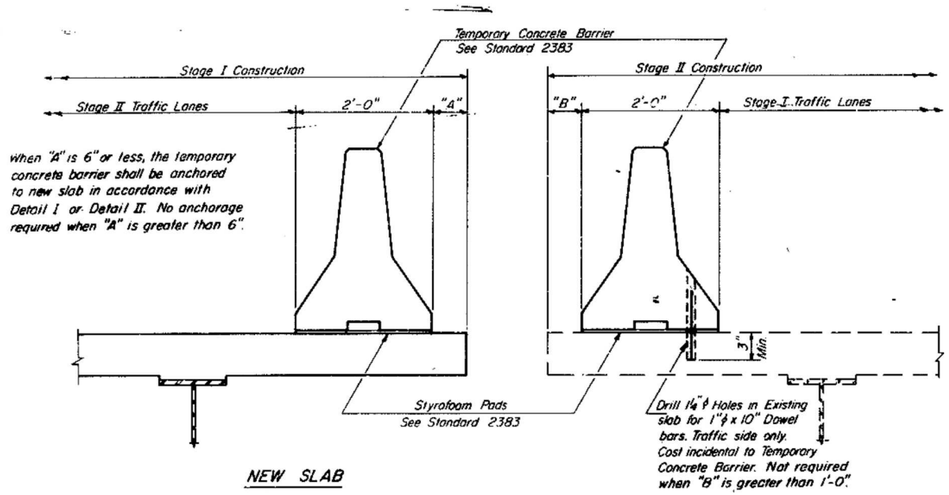


SECTIONS THRU SLAB

## NOTES

Detail I - With Bar Splicer or Couplers -
Connect one (1) 1" x 7" x 10" steel ℞ to the top layer of couplers with 2 - ⅝" ϕ bolts screwed to coupler at approximate ℄ of each 10'-0" barrier panel.

Detail II - With Extended Reinforcement Bars
Connect one (1) 1" x 7" x 10" steel ℞ to the concrete slab with 2 - ⅝" ϕ Expansion Anchors or cast in place inserts spaced between the top layer of reinforcement at approximate ℄ of each 10'-0" barrier panel.

Cost of anchorage is incidental to Temporary Concrete Barrier.

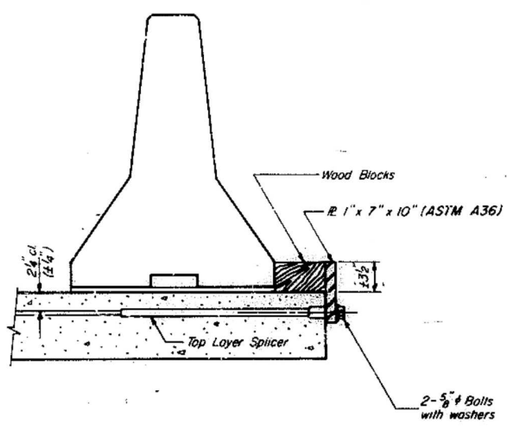


## DETAIL I

The 1" x 7" x 10" Plate shall not be removed until Stage II Construction forms and reinforcement bars are in place.

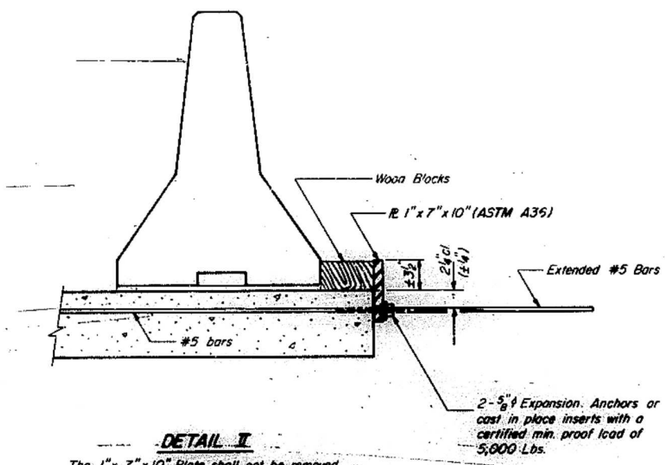


## DETAIL II

The 1" x 7" x 10" Plate shall not be removed until Stage II Construction forms and all reinforcement bars are in place and the concrete is ready to be placed.

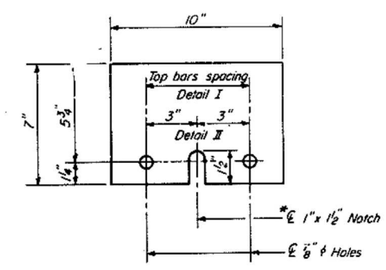


## ℞ 1" x 7" x 10"

* Required only with Detail II

| | |
|---|---|
| DESIGNED | Patrick M. Brown |
| CHECKED | A. L. Brown |
| DRAWN | JDB |
| CHECKED | A. L. B. |

Dec. 20 1983
EXAMINED
APPROVED
DIRECTOR OF HIGHWAYS

R-27 6-15-83

## TEMPORARY CONCRETE BARRIER FOR STAGE CONSTRUCTION

F.A.I. RT. 74 ~ SEC. 10 D-1
PEORIA ~ TAZEWELL COUNTIES
STATION 151+85

| ROUTE NO. | SECTION | COUNTY | TOTAL SHEETS | SHEET NO. |
|---|---|---|---|---|
| F.A.I. | | | 136 | 108 |
| FED. ROAD DIST. NO. 7 | ILLINOIS | FED. AID PROJECT | | |

SHEET NO. 60
75 SHEETS

# STATE OF ILLINOIS
# DEPARTMENT OF TRANSPORTATION

| Joint Size | "C" at 50°F | "D" at 50°F |
|---|---|---|
| 2 | 2" | 1½" min. |
| 2½ | 2½" | 1¾" min. |
| 4 | 3" | 2½" min. |

## INSTALLATION NOTES

1. Install sponge mandrels into positions shown to form flap convolution
2. Install parapet or sidewalk piece (trim roadway flap to fit before applying epoxy)
3. Install continuous seal in roadway
4. Install anchor blocks as indicated

NOTE A – Maximum spacing of anchor bolts shall be 12" centers

### SKEW LIMITATIONS

The details of the anchor blocks and the elastomeric membrane in the parapet, as shown, are for up to 50° skews

For skews greater than 50°, the anchor blocks and the elastomeric membrane, installed in accordance with dimension "D" might require modifications to insure a minimum clearance of 1½" from centerline of anchor studs to edge of parapet opening. The anchor blocks and the elastomeric membrane shall also be installed to the top of the parapet with the anchor studs spaced at ±12" cts

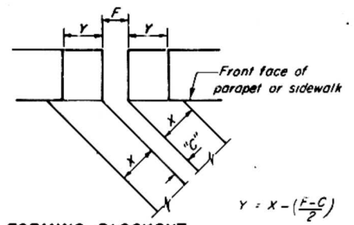


FORMING BLOCKOUT SKETCH

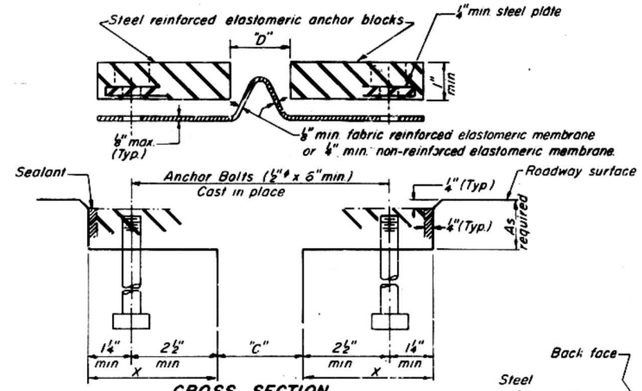


CROSS SECTION
PIER 12

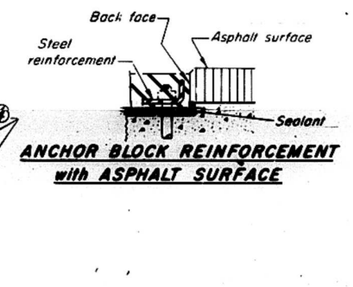


ANCHOR BLOCK REINFORCEMENT with ASPHALT SURFACE

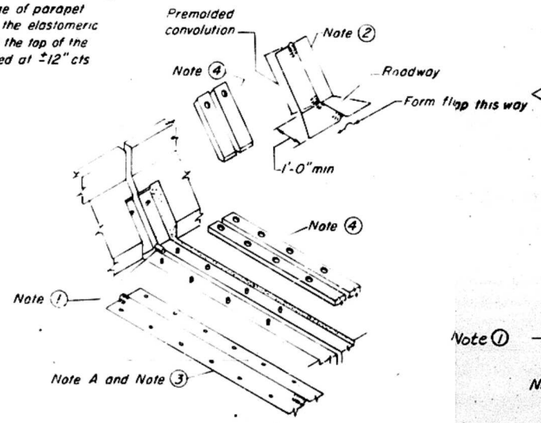


AT PARAPET

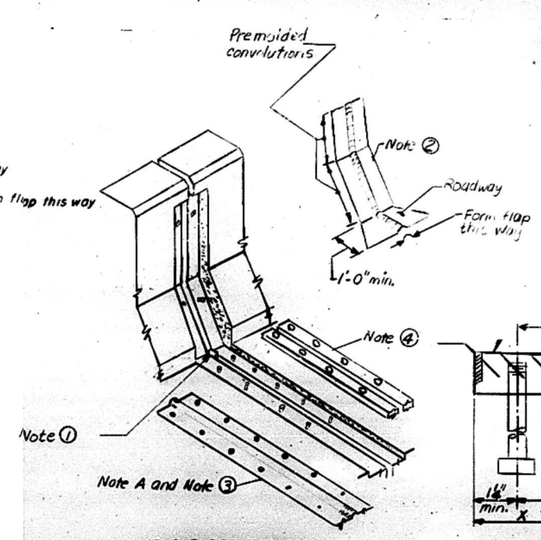


AT PARAPET MEDIAN

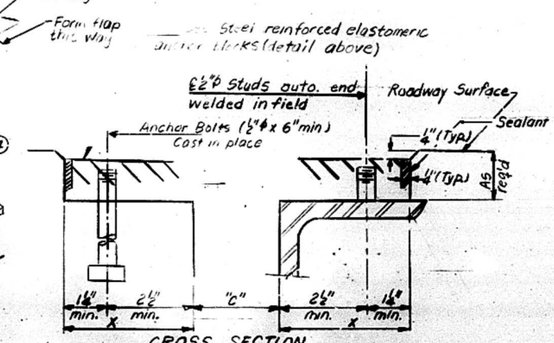


CROSS SECTION
PANEL POINT 34 & 44

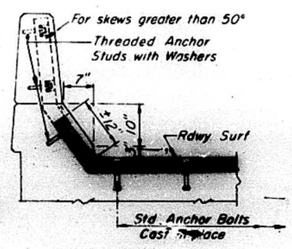


AT PARAPET

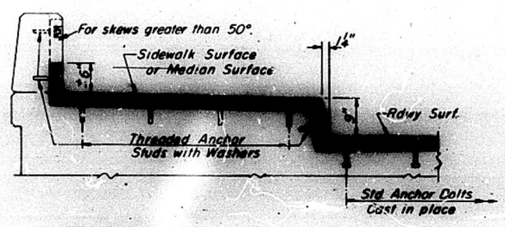


AT SIDEWALK

TYPICAL END TREATMENTS

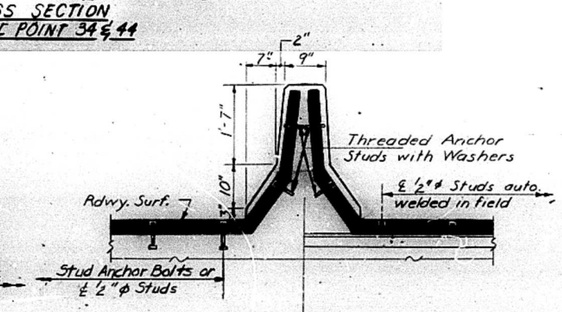


SHOWING CONCRETE SUPPORT | SHOWING STEEL SUPPORT

PARAPET MEDIAN

## GENERAL NOTES

Continuous Seal Neoprene Expansion Joint shall consist of molded anchor blocks of elastomer and steel, field assembled over continuous lengths of elastomeric membrane. See Special Provisions.

The elastomeric membrane shall be premolded with a single or a double upward convolution that will have a "memory" to return to its molded position upon joint closure

The steel reinforcement must extend up the back face of anchor blocks when asphalt surfaces are used but is optional in concrete blockout.

The convolution length shall be such that the extended length will not be greater than the manufactured length when the joint is fully expanded in its design range and will not protrude above the anchor blocks when the joint is fully compressed

Joint openings shall be adjusted in accordance with Article 503.07(c) of the Standard Specifications when the deck is poured at an ambient temperature other than 50°F

The parapet and sidewalk flaps may be furnished factory vulcanized to the roadway membrane provided the centerline of the convolution is maintained and the process and method meet the approval of the Engineer.

| | |
|---|---|
| DESIGNED | Patrick McKenna |
| CHECKED | R.L. Brown |
| DRAWN | [illegible] |
| CHECKED | R.L.B. |

Dec. 20 1983
EXAMINED
ASSISTANT ENGINEER OF BRIDGES AND STRUCTURES
APPROVED
DIRECTOR OF HIGHWAYS

EJ-CS 2-1-83

**CONTINUOUS SEAL TYPE NEOPRENE EXPANSION JOINTS**
For 2", 2½" and 4" Movement

F.A.I. RT 74 ~ SEC. 10 D-1
PEORIA - TAZEWELL COUNTIES
STATION 151+85

STATE OF ILLINOIS
DEPARTMENT OF TRANSPORTATION

| ROUTE NO. | SECTION | COUNTY | TOTAL SHEETS | SHEET NO. |
|---|---|---|---|---|
| F.A.I. | | | 136 | 109 |
| FED. ROAD DIST. NO. 7 | ILLINOIS | FED. AID PROJECT- | | |

SHEET NO. 61
75 SHEETS

## NEOPRENE EXPANSION JOINTS (6½), (9) and (13)

( See Special Provisions )

| Model | Supplier | Blockout Dimensions |
|---|---|---|
| (6½) TRANSFLEX, MODEL 650 | General Tire Company | T = 3¼", A = 2⅜", B = 9⅞" |
| (9) TRANSFLEX, MODEL 900 | General Tire Company | T = 4", A = 2 7/16", B = 12¾" |
| (13) TRANSFLEX, MODEL 1300 | General Tire Company | T = 5¼", A = 2⅝", B = 17½" |

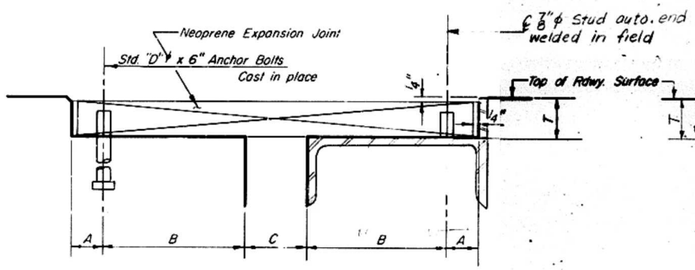


PANEL POINTS 19 & 59
**CROSS SECTION**
*At 50° F
Dimensions are at right angles.

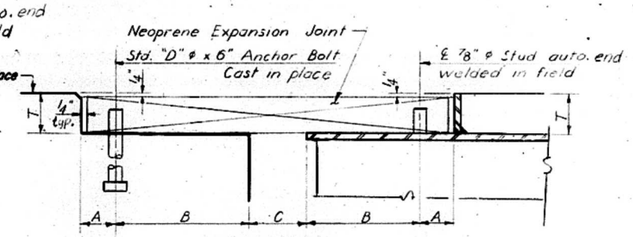


CROSS SECTION
PIER #3 & 8

*AT 50°F.
Dimensions are at right angles

NOTE:
Joint openings shall be adjusted in accordance with Article 503.07 (c) of the Std. Spec's when the deck is poured at an ambient temperature other than 50° F.

| Joint Size | C at 50°F. | "D" |
|---|---|---|
| 6½ | 4½" | ⅞" |
| 9 | 5½" | ⅞" |
| 13 | 7½" | 1⅛" |

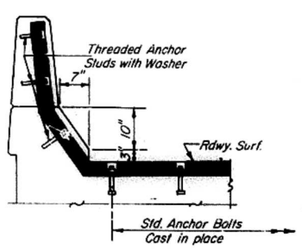


**AT PARAPET**

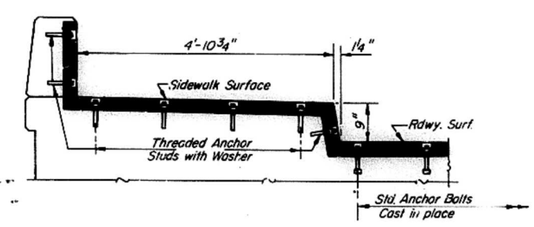


**AT SIDEWALK**

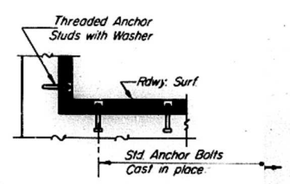


**AT WALL**

**TYPICAL END TREATMENTS**

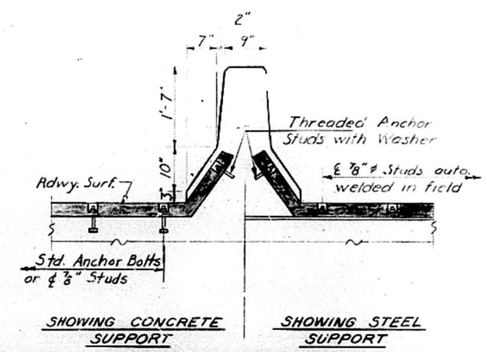


PARAPET MEDIAN

| | |
|---|---|
| DESIGNED | Patrick M. Petrine |
| CHECKED | A. L. Brown |
| DRAWN | |
| CHECKED | A. L. B. |

Dec. 20 1983
EXAMINED
PASSED
Chief Engineer
ENGINEER OF BRIDGE AND STRUCTURES
APPROVED
DIRECTOR OF HIGHWAYS

EJ-T 2-1-83

**NEOPRENE EXPANSION JOINTS**
For 6½", 9" and 13" movements

F.A.I. RT. 74 ~ SEC. 10 D-1
PEORIA - TAZEWELL COUNTIES
STATION 151 + 85

STATE OF ILLINOIS
DEPARTMENT OF TRANSPORTATION

| ROUTE NO. | SECTION | COUNTY | TOTAL SHEETS | SHEET NO. |
|---|---|---|---|---|
| S.B.I.L. F.A. | | | 136 | 110 |
| FED. ROAD DIST. NO. 7 | ILLINOIS | FED. AID PROJECT- | | |

SHEET NO. 62
75 SHEETS

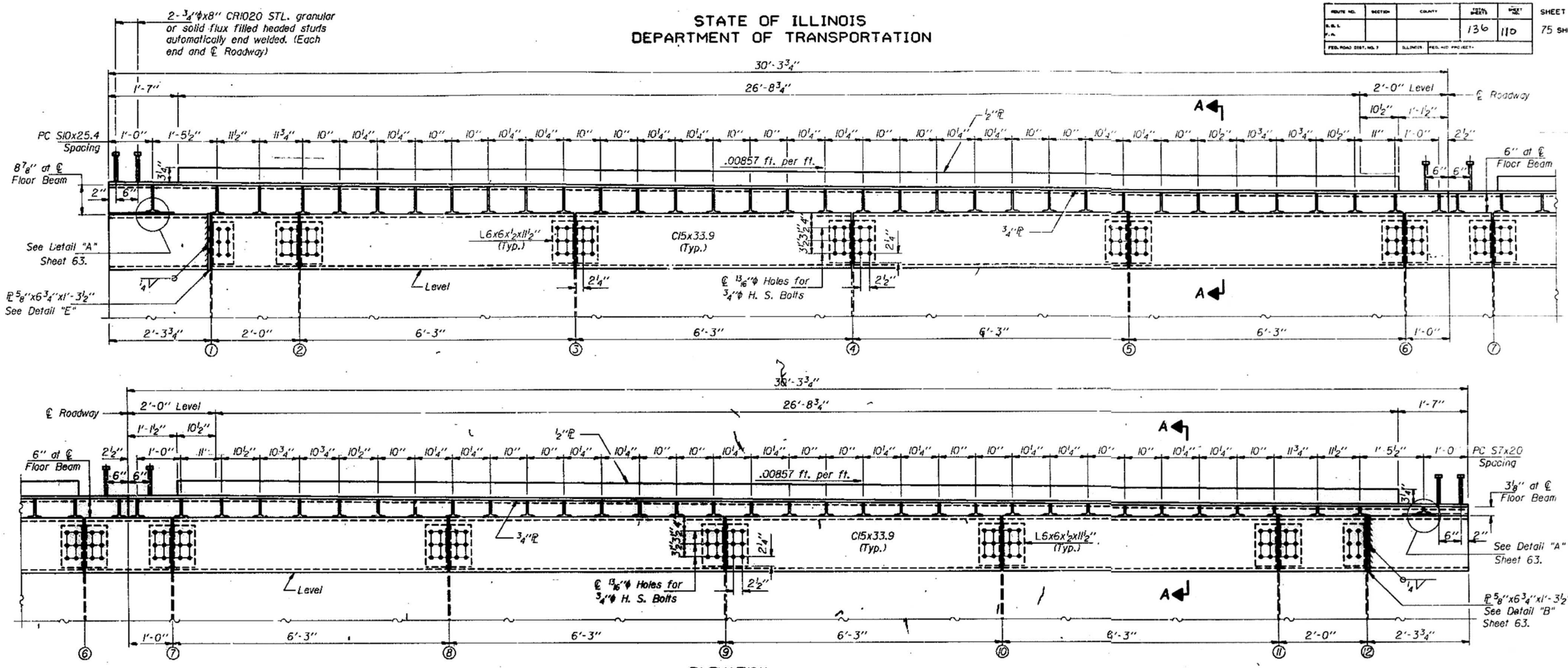


## ELEVATION
(LOOKING SOUTH)

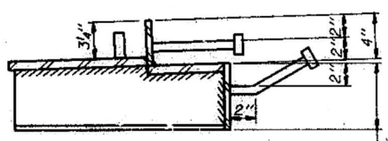


## DETAIL "D"

Varies from 8 7/8" to 6" East of ℄ Rdwy.
Varies from 6" to 3 1/8" West of ℄ Rdwy.

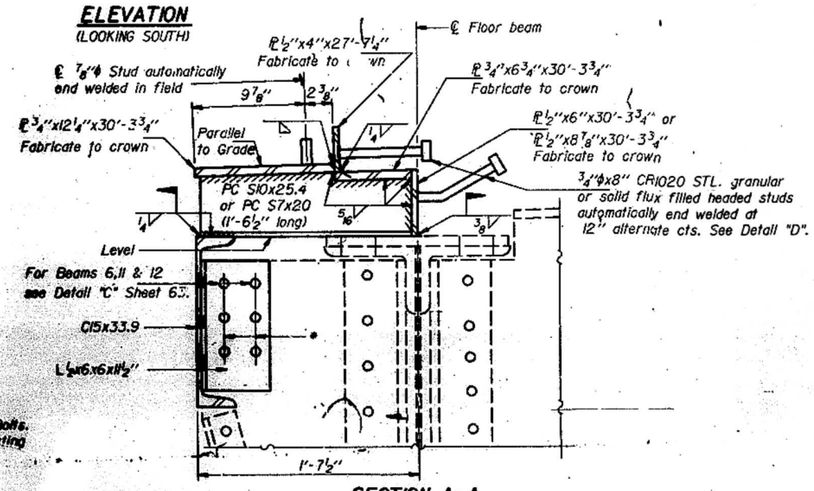


## SECTION A-A

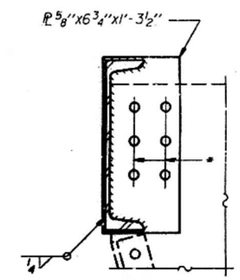


## DETAIL "E"

* ℄ 13/16"ϕ Holes in L's or ℙ for 7/8"ϕ H.S. Bolts. Holes to be drilled in the field to match existing holes in Web ℙ.

| | |
|---|---|
| DESIGNED | Patrick M Patrone |
| CHECKED | A. L. Brown |
| DRAWN | R. P. Summer |
| CHECKED | A. L. B. |

Dec 20, 1983
EXAMINED
PASSED
APPROVED
ENGINEER OF BRIDGE DESIGN
ENGINEER OF BRIDGES AND STRUCTURES
DIRECTOR OF HIGHWAYS

**NEOPRENE EXPANSION JOINT SUPPORT DETAILS AT PIER 3**
**F.A.I. RT.74 SEC.10D-1**
**PEORIA-TAZEWELL COUNTIES**
**STATION 151+85**

STATE OF ILLINOIS
DEPARTMENT OF TRANSPORTATION

| ROUTE NO. | SECTION | COUNTY | TOTAL SHEETS | SHEET NO. |
|---|---|---|---|---|
| F.A.I. | | | 136 | 111 |
| FED. ROAD DIST. NO. 7 | ILLINOIS | FED. AID PROJECT- | | |

SHEET NO. 63
75 SHEETS

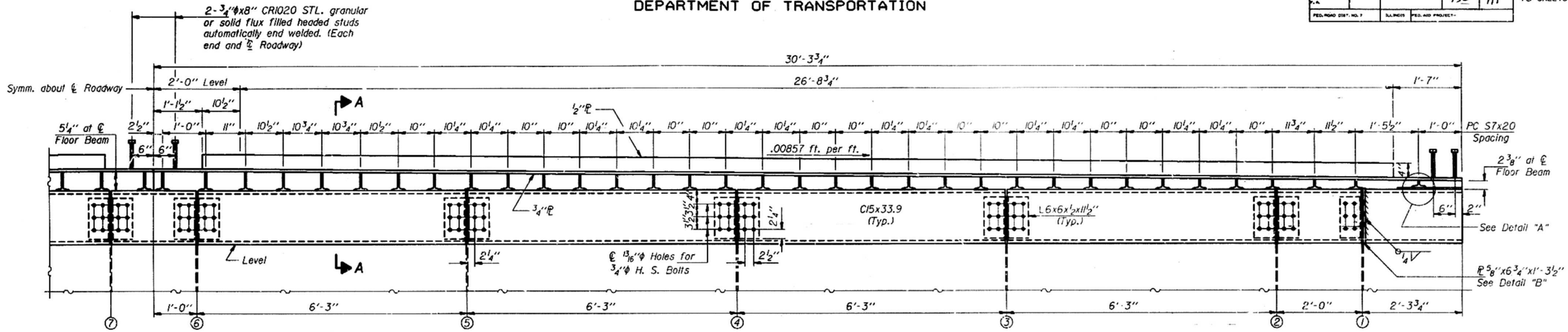


ELEVATION
(LOOKING NORTH)

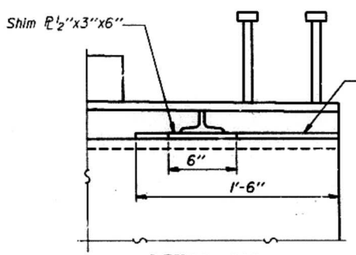


DETAIL "A"

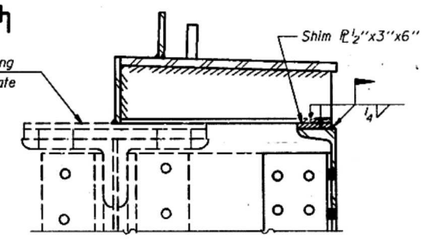


VIEW B-B

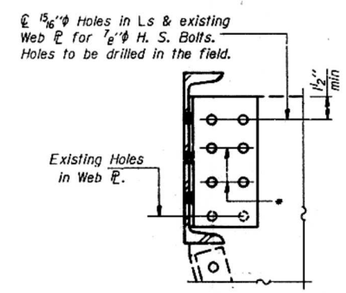


DETAIL "C"

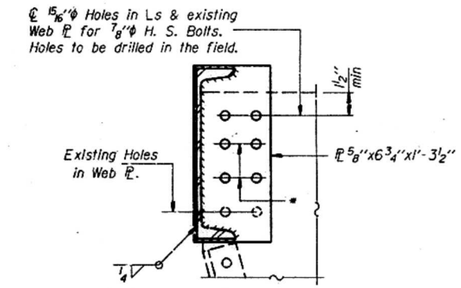


DETAIL "B"

What are you looking here for.
The joke's in your hand.

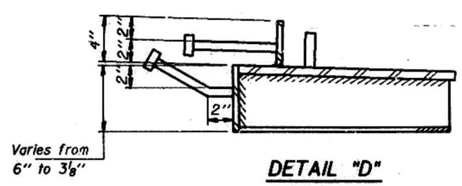


DETAIL "D"

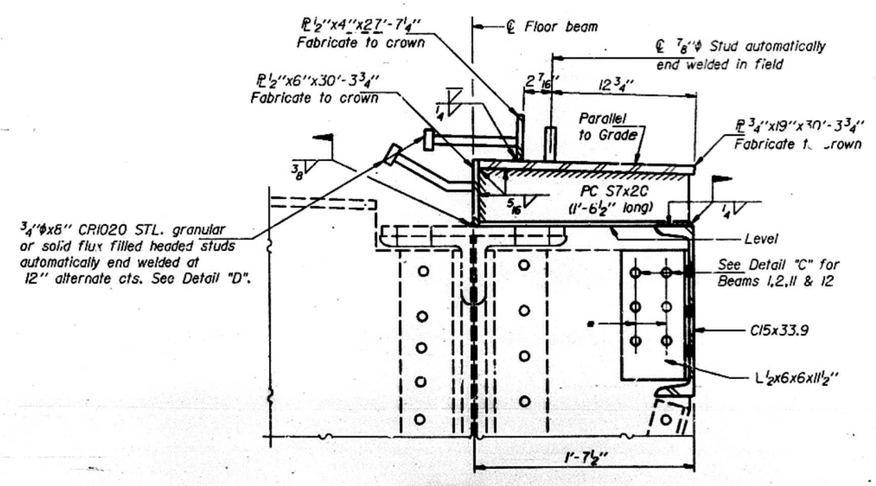


SECTION A-A

* ℄ 15/16"φ Holes in Ls or ℄ for 7/8"φ H.S. Bolts. Holes to be drilled in the field to match existing holes in Web ℄.

| | |
|---|---|
| DESIGNED | Patrick M Petrone |
| CHECKED | A. L. Brown |
| DRAWN | R. P. Summer |
| CHECKED | A. L. B. |

Dec. 20 1983
EXAMINED
APPROVED
DIRECTOR OF HIGHWAYS

NEOPRENE EXPANSION JOINT
SUPPORT DETAILS
AT PIER 8
F.A.I. RT.74 SEC.10D-1
PEORIA-TAZEWELL COUNTIES
STATION 151+85

STATE OF ILLINOIS
DEPARTMENT OF TRANSPORTATION

| ROUTE NO. | SECTION | COUNTY | TOTAL SHEETS | SHEET NO. |
|---|---|---|---|---|
| F.A.I. | | | 136 | 112 |
| FED. ROAD DIST. NO. 7 | ILLINOIS | FED. AID PROJECT- | | |

SHEET NO. 64
75 SHEETS

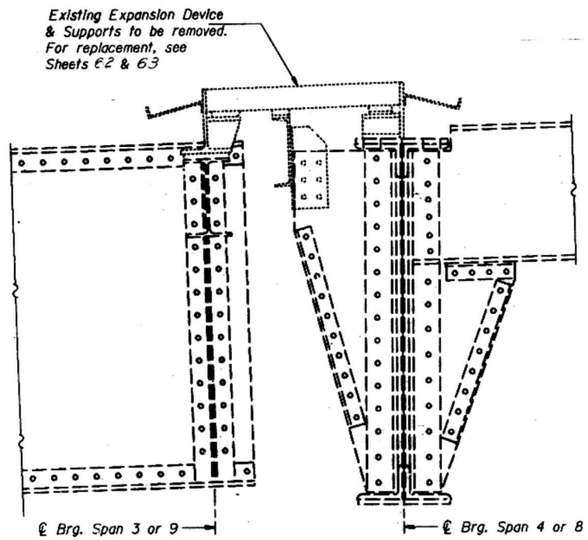


**EXISTING SECTION**
Pier 3 & 8

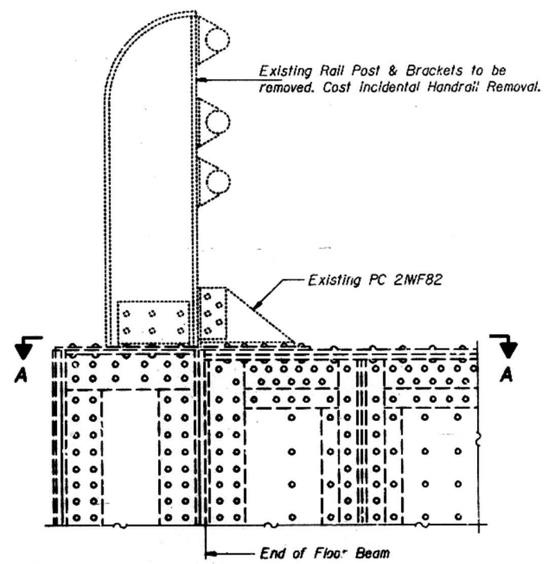


**PARTIAL ELEVATION**

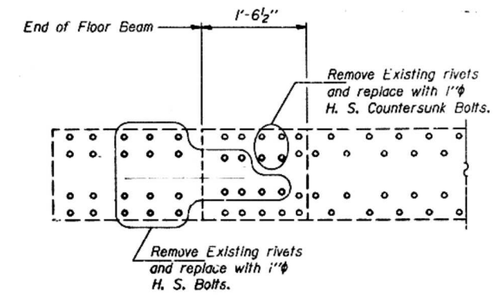


**VIEW A-A**

Note: When removing existing rivets, burning shall not be permitted.

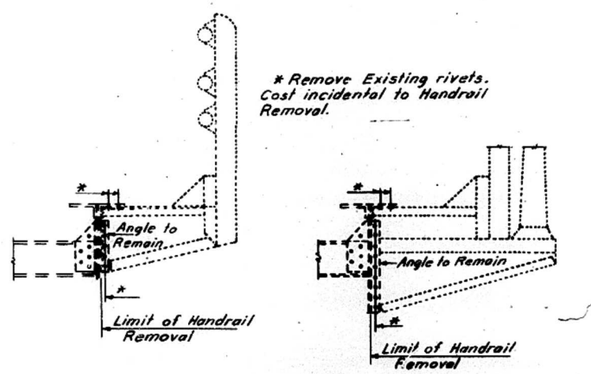


**HANDRAIL REMOVAL DETAILS (APPROACH SPANS)**

| | |
|---|---|
| DESIGNED | Patricia M. Petrone |
| CHECKED | A. L. Brown |
| DRAWN | R. P. Summer |
| CHECKED | A. L. B. |

Dec. 20 1983

MISCELLANEOUS DETAILS &
NEOPRENE EXPANSION JOINT
SUPPORT DETAILS
AT PIERS 3 & 8
F.A.I. RT. 74 SEC. 110-1
PEORIA-TAZEWELL COUNTIES
STATION 151+85

Revised 2-17-84 ALB

Rev 2-17-84

STATE OF ILLINOIS
DEPARTMENT OF TRANSPORTATION

| ROUTE NO. | SECTION | COUNTY | TOTAL SHEETS | SHEET NO. |
|---|---|---|---|---|
| F.A.I. | | | 136 | 113 |
| FED. ROAD DIST. NO. 7 | | ILLINOIS | FED. AID PROJECT- | |

SHEET NO. 65
75 SHEETS

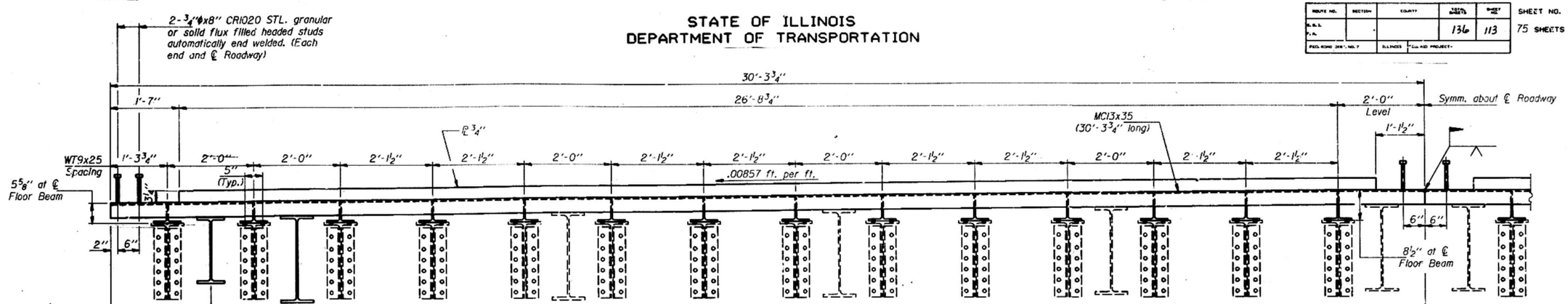


SECTION A-A

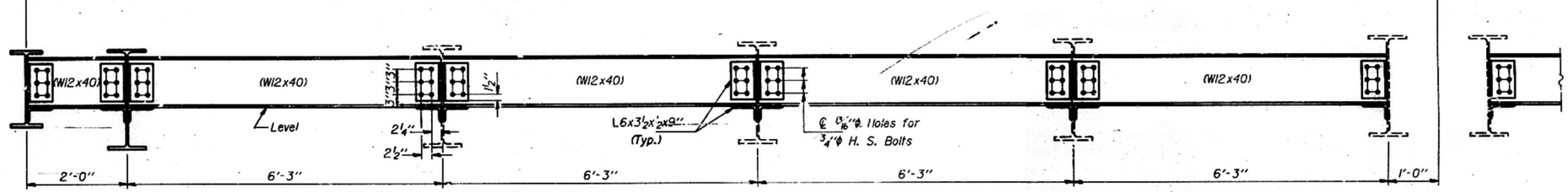


SECTION B-B

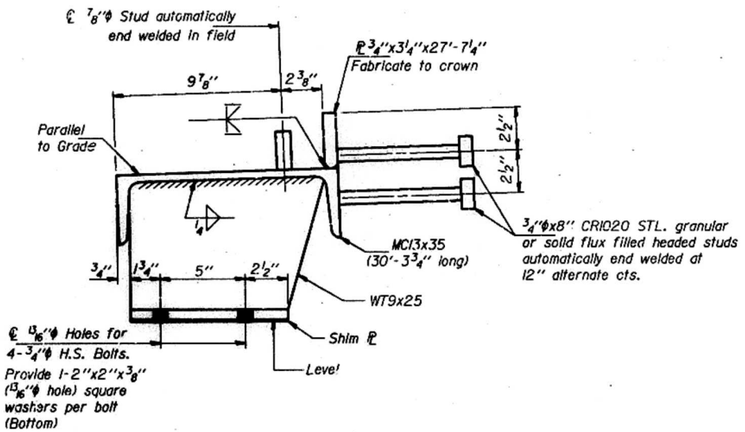


DETAIL "A"

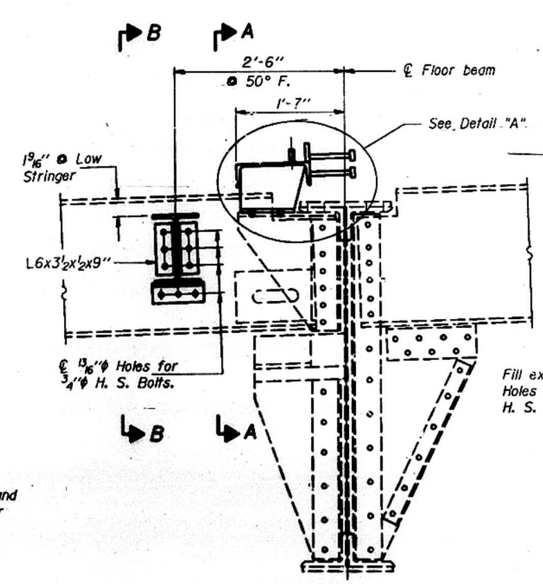


NEW SECTION

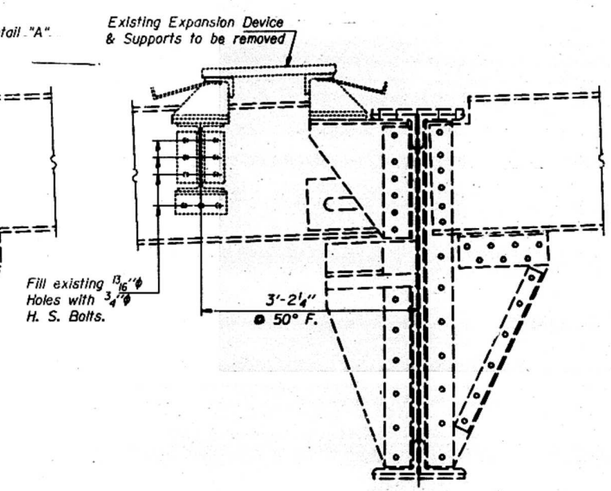


EXISTING SECTION

Note: Provide 1-1/8" Shim ℞ and 2-1/16" Shim ℞'s per stool for height adjustment.

| | |
|---|---|
| DESIGNED | Patrick M Patrick |
| CHECKED | R. L. Brown |
| DRAWN | R. P. Summer |
| CHECKED | R. L. B. |

Dec. 20 1983
EXAMINED
PASSED
APPROVED
ENGINEER OF BRIDGES AND STRUCTURES
DIRECTOR OF HIGHWAYS

NEOPRENE EXPANSION JOINT SUPPORT DETAILS
AT PANEL POINTS 19 & 59
F.A.I. RT.74 SEC.10D-1
PEORIA-TAZEWELL COUNTIES
STATION 151+85

STATE OF ILLINOIS
DEPARTMENT OF TRANSPORTATION

| ROUTE NO. | SECTION | COUNTY | TOTAL SHEETS | SHEET NO. |
|---|---|---|---|---|
| S.B.I. F.A. | | | 136 | 116 |
| FED. ROAD DIST. NO. 7 | | ILLINOIS | FED. AID PROJECT- | |

SHEET NO. 66
75 SHEETS

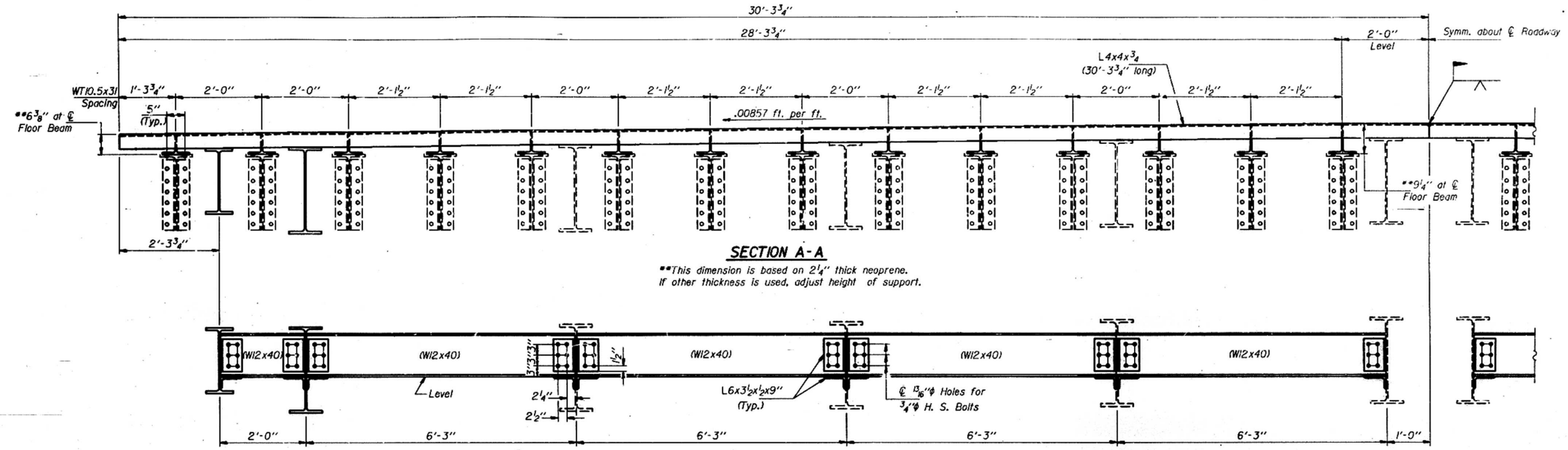


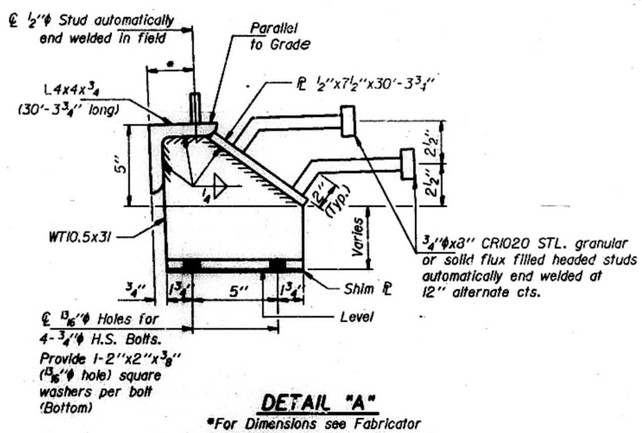


DETAIL "A"
*For Dimensions see Fabricator of Neoprene Expansion Joint (4").

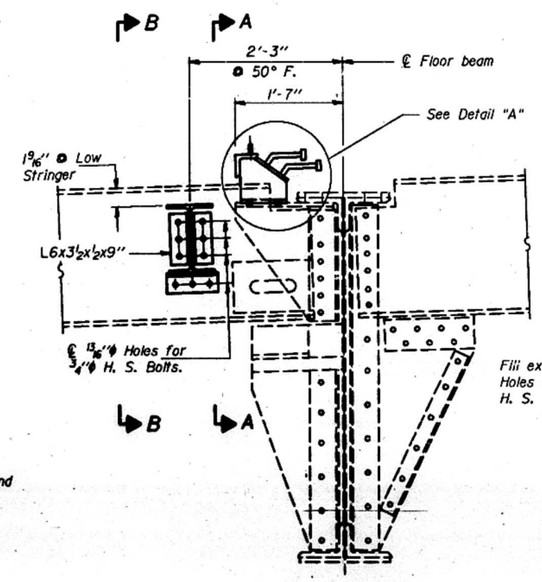


NEW SECTION

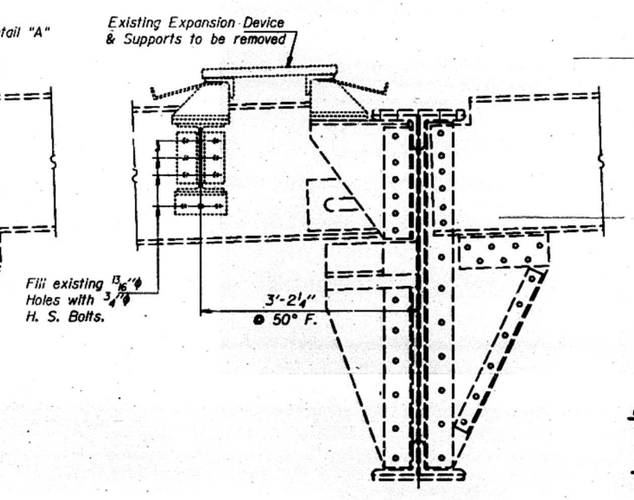


EXISTING SECTION

Note: Provide 1-⅛" Shim PL and 2-1/16" Shim PL's per stool for height adjustment.

| | |
|---|---|
| DESIGNED | Patrick M Patrick |
| CHECKED | A. L. Brown |
| DRAWN | R. F. Summer |
| CHECKED | A. L. B. |

December 20 1983
CHANGED
PRESENTED
APPROVED
DIRECTOR OF HIGHWAYS

NEOPRENE EXPANSION JOINT
SUPPORT DETAILS
AT PANEL POINTS 34 & 44
F.A.I. RT.74 SEC.10D-1
PEORIA-TAZEWELL COUNTIES
STATION 151+85

STATE OF ILLINOIS
DEPARTMENT OF TRANSPORTATION

| ROUTE NO. | SECTION | COUNTY | TOTAL SHEETS | SHEET NO. |
|---|---|---|---|---|
| F.A.I. | | | 136 | 116A |
| FED. ROAD DIST. NO. 7 | | ILLINOIS | FED. AID PROJECT- | |

SHEET NO. 116A OF 136 SHEETS

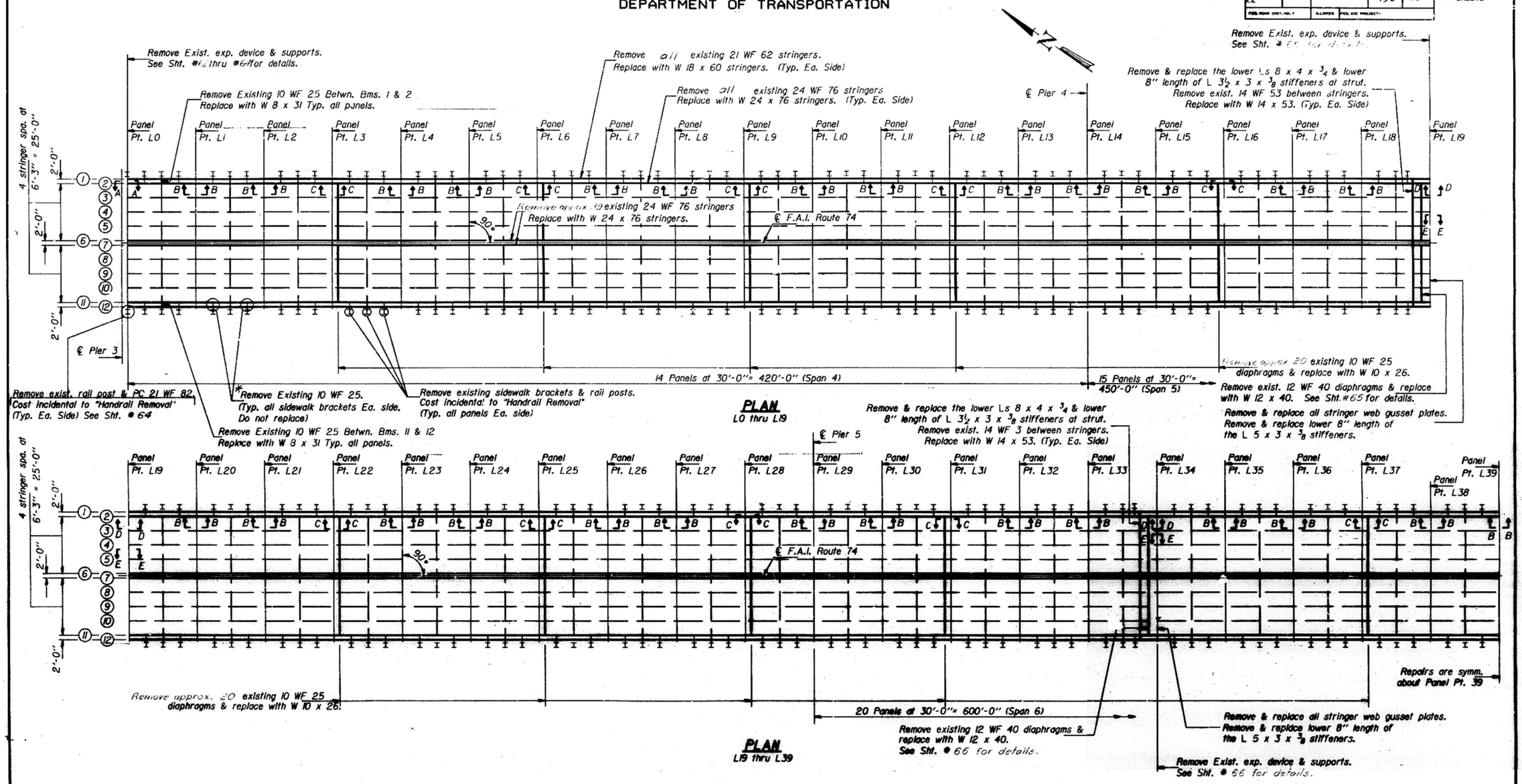


| | |
|---|---|
| DESIGNED | Patricia M. Pitman |
| CHECKED | A. L. Brown |
| DRAWN | T.J. Downing |
| CHECKED | A.L.B. |

Revised 2-17-84 ALB

Dec. 20 1983

APPROVED

Note: See Sht. #69 thru #70 for details of removal & replacement, unless otherwise noted.
# To be billed as "Structural Steel Removal."

**STRUCTURAL STEEL-REPAIRS**
**TRUSS SPANS**
**F.A.I. RT. 74 SEC. 100-1**
**PEORIA-TAZEWELL COUNTIES**
**STA. 151+85**

Rev. 2-17-84

| ROUTE NO. | SECTION | COUNTY | TOTAL SHEETS | SHEET NO. |
|---|---|---|---|---|
| F.A. | | | 136 | 116B |

SHEET NO 75 SHEETS

# STATE OF ILLINOIS
# DEPARTMENT OF TRANSPORTATION

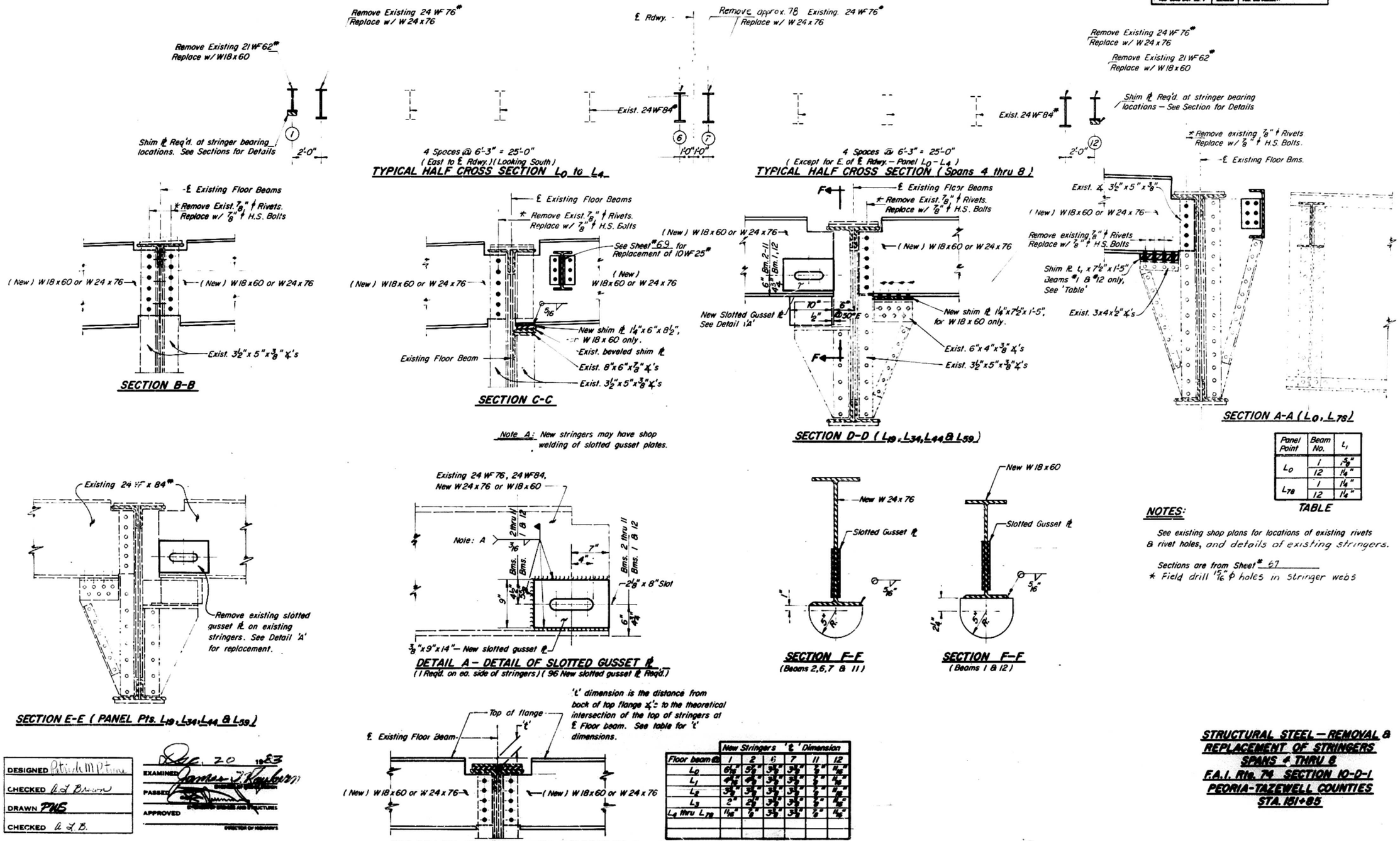


| Panel Point | Beam No. | $L_1$ |
|---|---|---|
| $L_0$ | 1 | 1⅝" |
| | 12 | 1¼" |
| $L_{78}$ | 1 | 1¼" |
| | 12 | 1¼" |

TABLE

| Floor beam @ | New Stringers 't' Dimension 1 | 2 | 6 | 7 | 11 | 12 |
|---|---|---|---|---|---|---|
| $L_0$ | 6 1/16" | 3 5/8" | 3 5/8" | 3 5/8" | ½" | 4 1/16" |
| $L_1$ | 4 3/8" | 4 3/8" | 3 5/8" | 3 5/8" | ½" | 4 1/16" |
| $L_2$ | 3 5/8" | 3 5/8" | 3 5/8" | 3 5/8" | ½" | 4 1/16" |
| $L_3$ | 2" | 2 5/8" | 3 5/8" | 3 5/8" | ½" | 4 1/16" |
| $L_4$ thru $L_{78}$ | 1 1/16" | ½" | 3 5/8" | 3 5/8" | ½" | 4 1/16" |
| | | | | | | |
| | | | | | | |

**NOTES:**

See existing shop plans for locations of existing rivets & rivet holes, and details of existing stringers.

Sections are from Sheet* 67

* Field drill 15/16" ϕ holes in stringer webs

| | |
|---|---|
| DESIGNED | R.T. Tindell M.P. Tinn |
| CHECKED | R. L. Brown |
| DRAWN | PWS |
| CHECKED | R. L. B. |

Dec. 20 1983

EXAMINED James J. Kaufman
DIRECTOR OF HIGHWAYS

PASSED
ENGINEER OF BRIDGES AND STRUCTURES

APPROVED
DIRECTOR OF HIGHWAYS

**STRUCTURAL STEEL – REMOVAL & REPLACEMENT OF STRINGERS SPANS 4 THRU 8**
**F.A.I. Rte. 74 SECTION 10-D-1**
**PEORIA-TAZEWELL COUNTIES**
**STA. 151+85**

| ROUTE NO | SECTION | COUNTY | TOTAL SHEETS | SHEET NO |
|---|---|---|---|---|
| S.B.I. F.A. | | | 136 | 115C |
| FED. ROAD DIST. NO. 7 | ILLINOIS | FED. AID PROJECT- | | |

SHEET NO 115C OF 136 SHEETS

# STATE OF ILLINOIS
# DEPARTMENT OF TRANSPORTATION

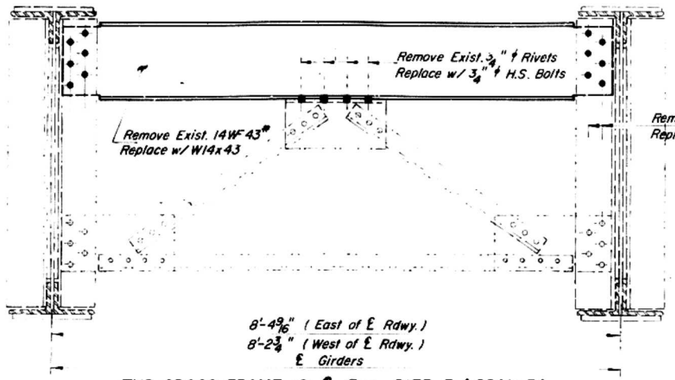


**TYP. CROSS FRAME @ ℄ Brg. PIER 3 ( SPAN 3)**
( Looking North ) ( 6 Diaph. Req'd. )

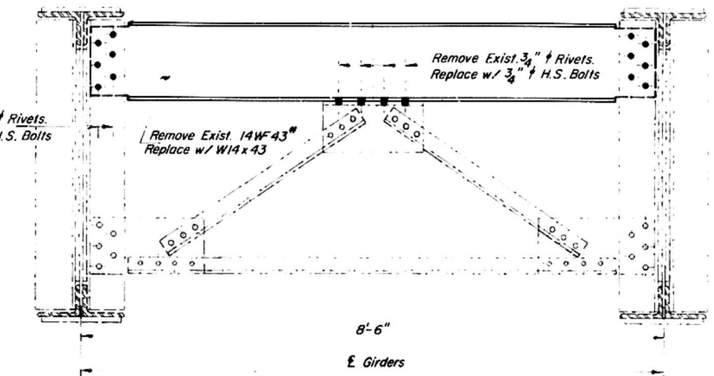


**TYP. CROSS FRAME @ ℄ Brg. PIER 8 ( SPAN 9 ) & PIER 12 ( SPAN 12 & 13 )**
( 18 Diaph. Req'd. )

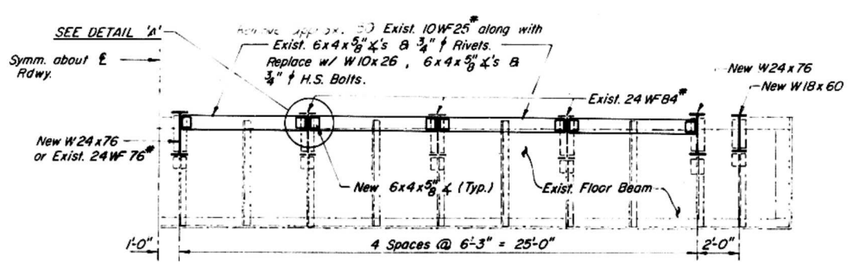


**HALF-SECTION @ Stringer Slip Jts. @ Panel Points**
$L_3$, $L_6$, $L_9$, $L_{12}$, $L_{16}$, $L_{22}$, $L_{25}$, $L_{28}$, $L_{31}$, $L_{37}$, $L_{41}$, $L_{47}$, $L_{50}$, $L_{53}$, $L_{56}$, $L_{62}$, $L_{66}$, $L_{69}$, $L_{72}$ and $L_{75}$
( Approx. 80 Req'd. Total )

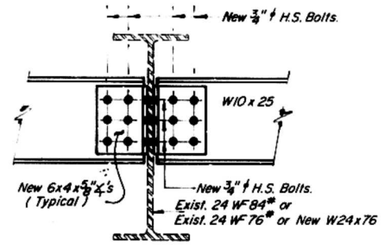


**DETAIL 'A'**

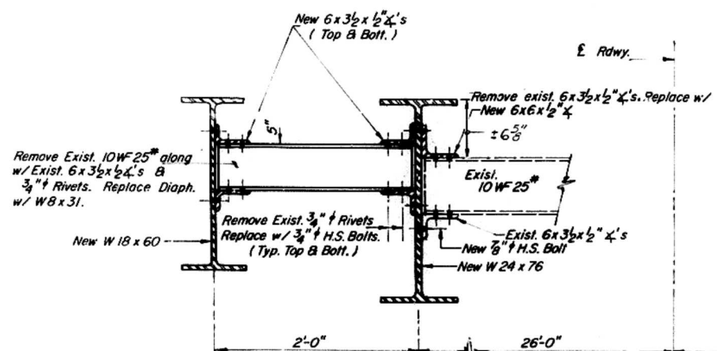


**TYPICAL HALF CROSS SECTION $L_0$ to $L_1$ EAST of ℄ Rdwy.**
( Looking South )

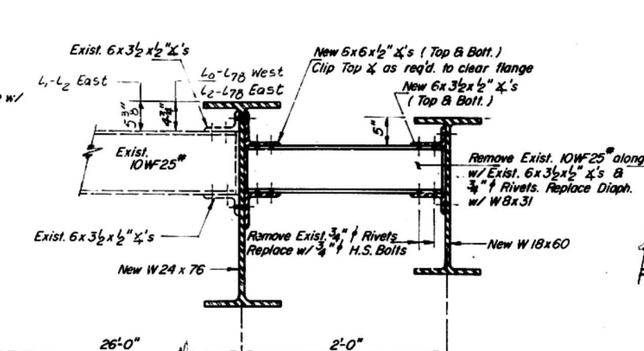


**TYPICAL HALF CROSS SECTION ( Except $L_0$ to $L_1$ - EAST of ℄ Rdwy.)**
( 156 Diaph. Req'd. )

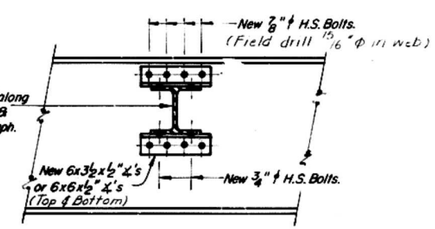


**TYPICAL END VIEW**

**NOTES:**

See existing shop plans for locations of existing rivets and rivet holes.

For details of new W-flange beams, See Sht. # 68

| | |
|---|---|
| DESIGNED | W. C. McMillan |
| CHECKED | O. J. Brown |
| DRAWN | PNS |
| CHECKED | O. J. B. |

Dec. 20 1983
EXAMINED James T. Rowbury
PASSED
ENGINEER OF BRIDGES AND STRUCTURES
APPROVED
DIRECTOR OF HIGHWAYS

**STRUCTURAL STEEL - DIAPHRAGM REMOVAL & REPLACEMENT**
**F.A.I. Rte. 74 SECTION 10-D-1**
**PEORIA-TAZEWELL COUNTIES**
**STA. 151+85**

STATE OF ILLINOIS
DEPARTMENT OF TRANSPORTATION

| ROUTE NO. | SECTION | COUNTY | TOTAL SHEETS | SHEET NO. |
|---|---|---|---|---|
| S.B.I. F.A. | | | 136 | 115 D |
| FED. ROAD DIST. NO. 7 | ILLINOIS | FED. AID PROJECT- | | |

SHEET NO 7
7 SHEETS

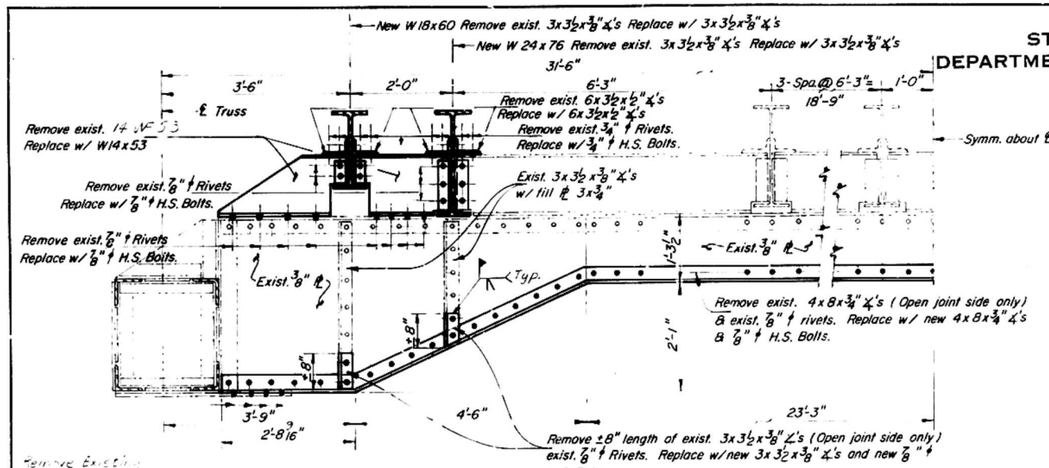


Remove Existing ⅞ϕ Rivets Replace w/ ⅞" ϕ H.S. Bolts

**HALF-SECTION @ Strut (@ Panel Pts. $L_{19}$, $L_{34}$, $L_{44}$ & $L_{59}$)**

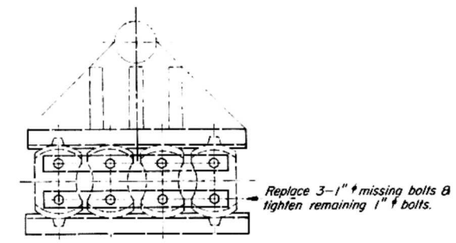


**PIER #3 (Span #4)-EAST BEARING**

Notes:

All segmental Rocker Bearings (Pier 3-Span 4 & Pier 8-Span 8) shall be cleaned, freed and greased. See Special Provisions for Bearing Rehabilitation.

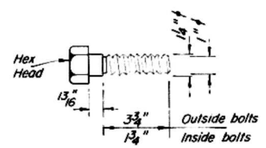


**BOLT DETAIL**

Replacement bolt (3-Req'd.)

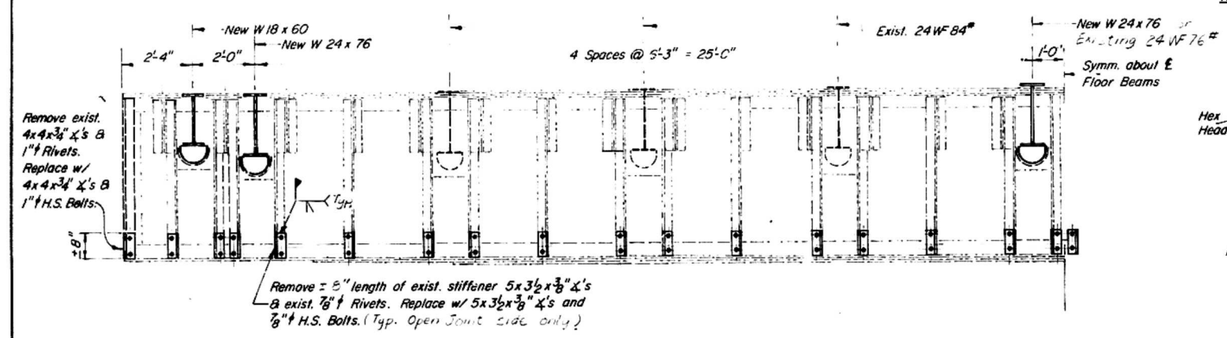


**HALF-CROSS SECTION OF FLOOR BEAMS (@ Panel Pts. $L_{14}$, $L_{34}$, $L_{44}$ & $L_{59}$)**

NOTES:

See existing shop plans for locations of existing rivets and rivet holes.

For details of new W-flange stringers, See Sht. # 68

| | |
|---|---|
| DESIGNED | Patricia M. Petrone |
| CHECKED | A. J. Brown |
| DRAWN | pwc |
| CHECKED | A. J. B. |

Dec. 20 1983
EXAMINED James T. Barburn
PASSED
APPROVED

**STRUCTURAL STEEL -- REMOVAL & REPLACEMENT**
**F.A.I. Rte. 74 SECTION 10-D-1**
**PEORIA-TAZEWELL COUNTIES**
**STA. 151+85**

STATE OF ILLINOIS
DEPARTMENT OF TRANSPORTATION

| | | | | | |
|---|---|---|---|---|---|
| STATE ILL. | SECTION | COUNTY | TOTAL SHEETS | SHEET NO. | |
| F.A.S. | | | 136 | 116E | SHEET NO. 71 |
| F.A.S. | | | | | 75 SHEETS |
| FED. ROAD DIST. NO. 7 | | ILLINOIS | FED. AID PROJECT - | | |

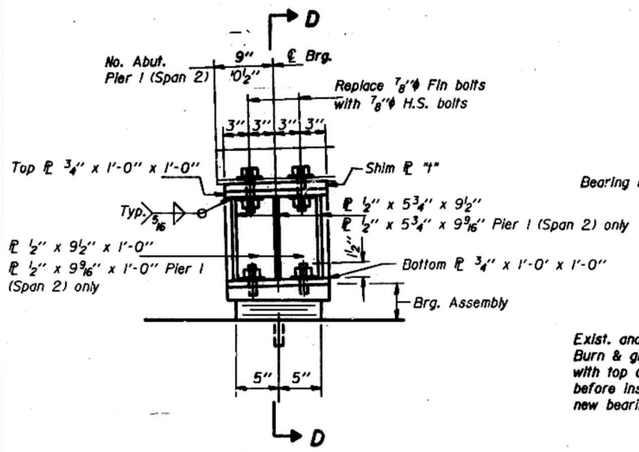


ELEVATION-NO. ABUT. & PIER 1 (SPAN 2)

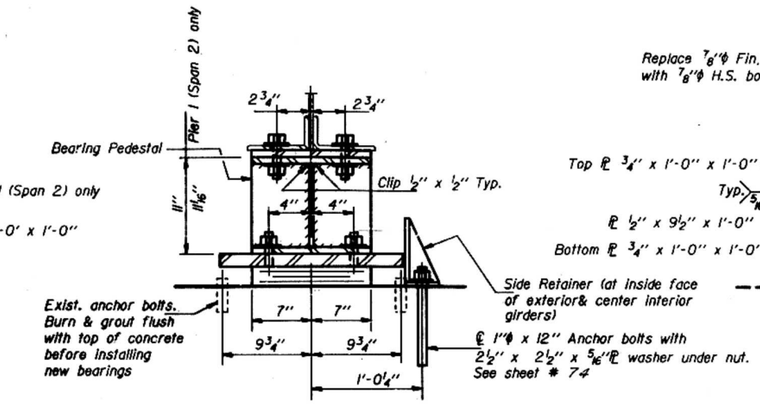


SEC. D-D

TYPE I ELASTOMERIC EXP. BRG.

(30 Required at 11" Height)
(8 Required at 11 1/16" Height)

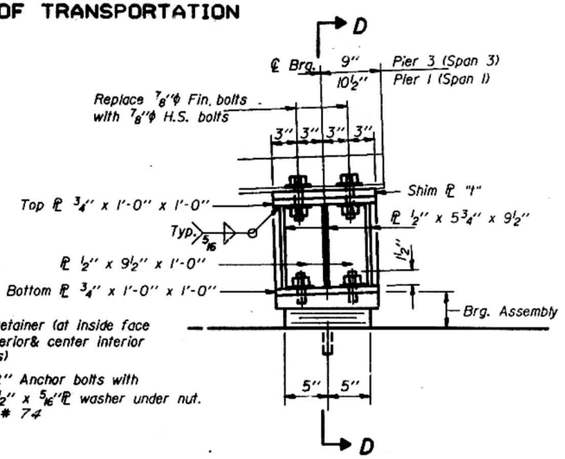


ELEVATION-PIER 1 (SPAN 1)& PIER 3 (SPAN 3)

SHIM PLATES

| | GIRDER | | | | |
|---|---|---|---|---|---|
| | 6 | 17 | 23 | 26 | 34 |
| Shim "4" | 5/16" | 5/16" | 5/16" | ¼" | 1/16" |

For girder location, see Plan view on sheet #6.

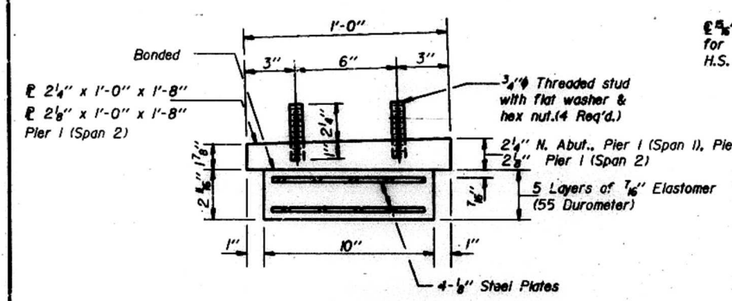


BEARING ASSEMBLY

Note:
Shim plates shall not be placed under Bearing Assembly.

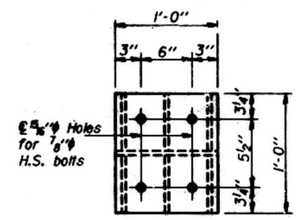


TOP PLATE OF PEDESTAL

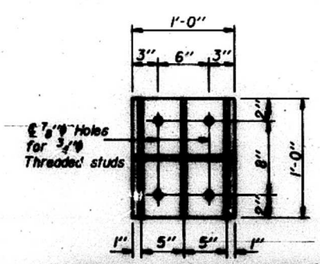


BOTTOM PLATE OF PEDESTAL

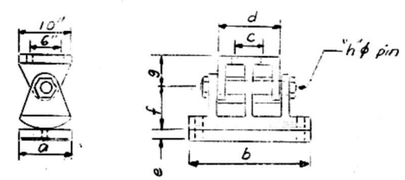


TYPICAL EXISTING EXPANSION BEARING
FOR INFORMATION ONLY

| LOCATION | a | b | c | d | e | f | g | h |
|---|---|---|---|---|---|---|---|---|
| N. Abut., PIER 1 (SPAN 1 & 2), PIER 3 (SPAN 3) | 8" | 1'-11½" | 5½" | 12" | 1¾" | 8" | 6" | 2¾" |
| PIER 8 (SPAN 9), PIER 12 (SPAN 12) | 8" | 2'-3" | 8" | 1'-4" | 1½" | 8" | 6" | 3" |
| PIER 12 (SPAN 13) | 8" | 2'-1" | 8" | 1'-2" | 1½" | 8" | 6" | 3" |
| PIER 9 & 11 | 12" | 2'-4" | 8" | 1'-4" | 2½" | 11" | 6" | 4¼" |

TABLE OF DIMENSIONS

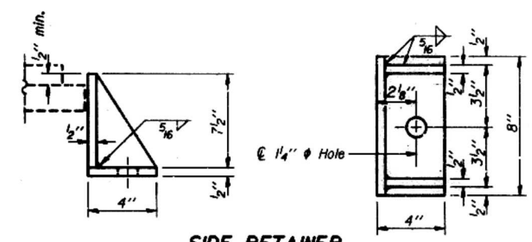


SIDE RETAINER

Built up retainers from ½" angles are acceptable.
(No. Required 60)

No. & So. Approaches

| ITEM | UNIT | QUANTITY |
|---|---|---|
| Jacking and Cribbing | Each | 78 |

| | |
|---|---|
| DESIGNED | Patrick M. Stone |
| CHECKED | A.H. Brown |
| DRAWN | J.T. Downing |
| CHECKED | A.L.B. |

Aug. 20 '82
[illegible]
ENGINEER
SUPERVISOR

STRUCTURAL STEEL-BEARINGS
[illegible] APPROACH
F.A.I. RT. 74 SEC. 20-J
PEORIA-TAZEWELL COUNTIES
STA. [illegible]

STATE OF ILLINOIS
DEPARTMENT OF TRANSPORTATION

| | | | | | |
|---|---|---|---|---|---|
| | | | 136 | 116F | SHEET NO. 72 / 75 SHEETS |

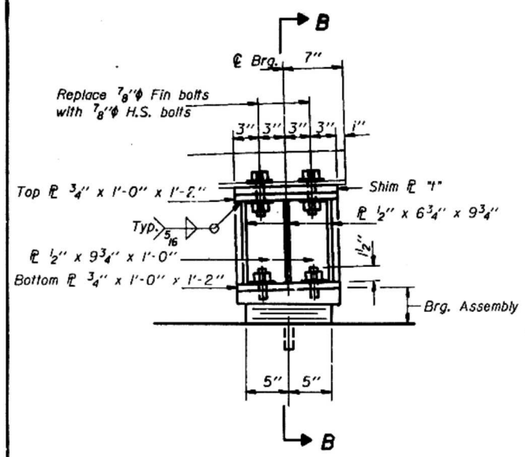


ELEVATION-PIER 12 (SPAN 13)

TYPE I ELASTOMERIC EXP. BRG.

(8 Required)

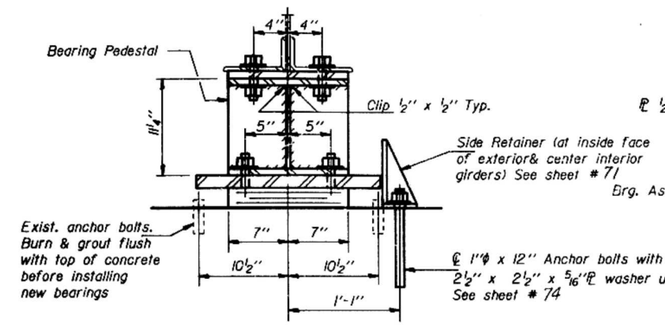


SEC. B-B

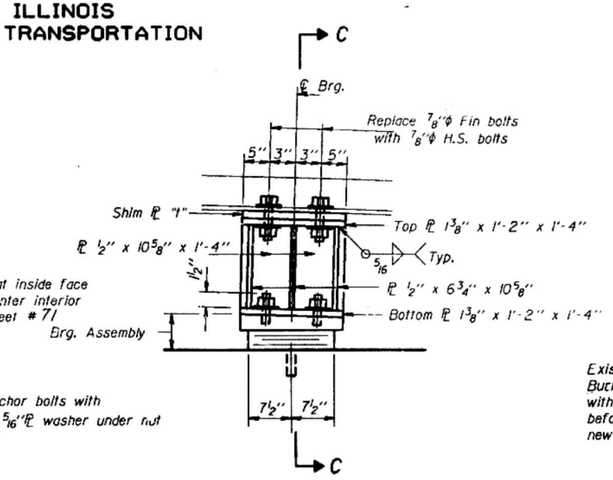


ELEVATION-PIERS 9 & 11

TYPE I ELASTOMERIC EXP. BRG.

(16 Required)

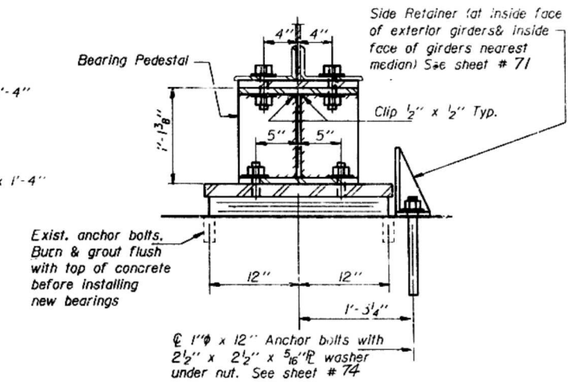


SEC. C-C

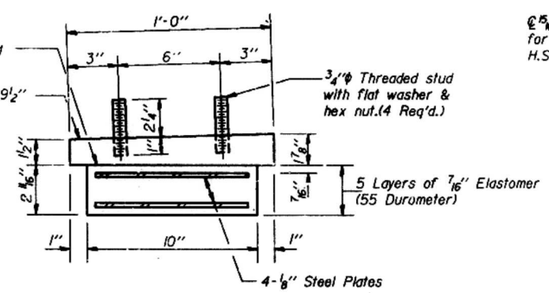


BEARING ASSEMBLY-PIER 12 (SPAN 13)

Note:
Shim plates shall not be placed under Bearing Assembly.

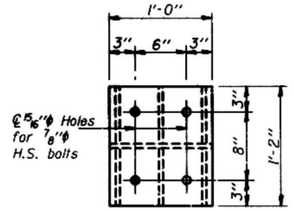


TOP PLATE OF PEDESTAL

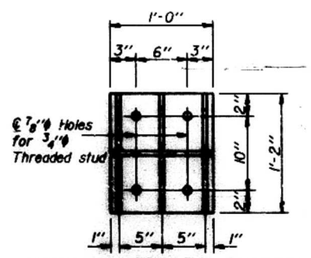


BOTTOM PLATE OF PEDESTAL

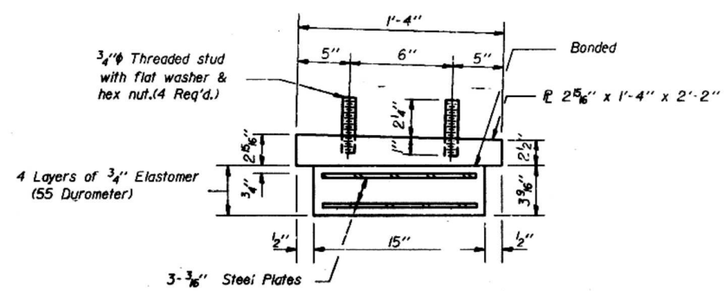


BEARING ASSEMBLY-PIERS 9 & 11

Note:
Shim plates shall not be placed under Bearing Assembly.

* SHIM PLATES

| | GIRDER | | | | | | | |
|---|---|---|---|---|---|---|---|---|
| | 1 | 2 | 3 | 4 | 5 | 6 | 7 | 8 |
| Shim "1" | 0" | 1/8" | 1 3/4" | 2 5/8" | 2 5/8" | 1 3/4" | 1/8" | 0" |

Note: The quantity of "Jacking & Cribbing" for the South Approach - Type I Elast. Exp. Brgs. are billed on sheet # 71
*For girder location, see Plan view on sht. #10

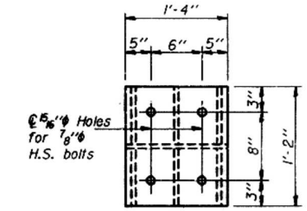


TOP PLATE OF PEDESTAL

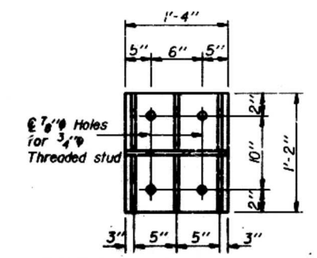


BOTTOM PLATE OF PEDESTAL

| | |
|---|---|
| DESIGNED | Patrick M Patton |
| CHECKED | A. L. Brown |
| DRAWN | J.T. Downing |
| CHECKED | A. L. B. |

Dec. 20 1963
EXAMINED James J. Hickerson
PASSED
APPROVED
DIRECTOR OF HIGHWAYS

STRUCTURAL STEEL-BEARINGS
SOUTH APPROACH
F.A.I. RT. 74 SEC. 10D-1
PEORIA-TAZEWELL COUNTIES
STA. 151+85

STATE OF ILLINOIS
DEPARTMENT OF TRANSPORTATION

| ROUTE NO. | SECTION | COUNTY | TOTAL SHEETS | SHEET NO. |
|---|---|---|---|---|
| F.A.I. | | | 136 | 116 |
| PROJ. ROAD DIST. NO. 7 | ILLINOIS | FED. AID PROJECT- | | |

SHEET NO. 73
75 SHEETS

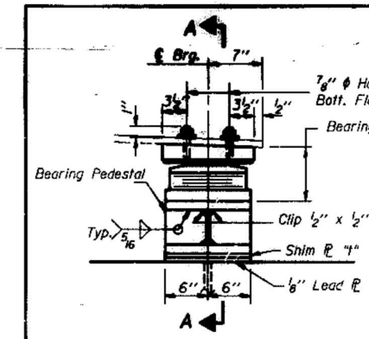


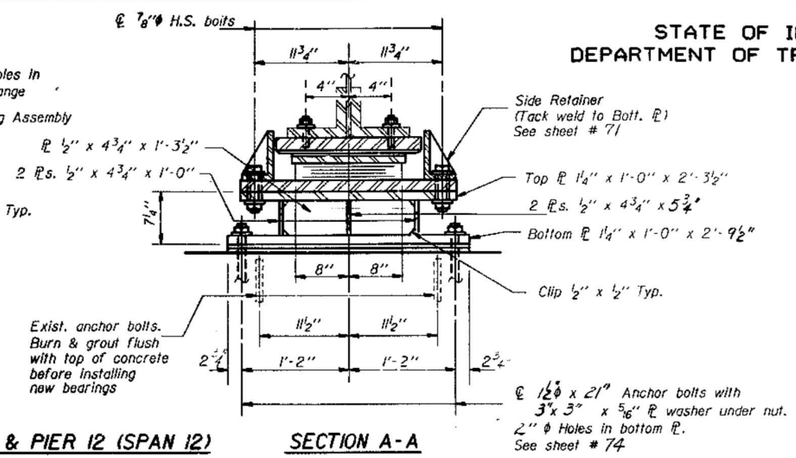


ELEVATION AT PIER 8 (SPAN 9) & PIER 12 (SPAN 12)

SECTION A-A

TYPE II TFE ELASTOMERIC EXP. BRG.
(16 Required)

## SHIM PLATES

| | GIRDER | | | | | | | |
|---|---|---|---|---|---|---|---|---|
| | 1 | 2 | 3 | 4 | 5 | 6 | 7 | 8 |
| Shim "1" | 0" | 1/8" | 1 3/4" | 2 5/8" | 2 5/8" | 1 3/4" | 1/8" | 0" |

For girder location see Plan view on sht #10

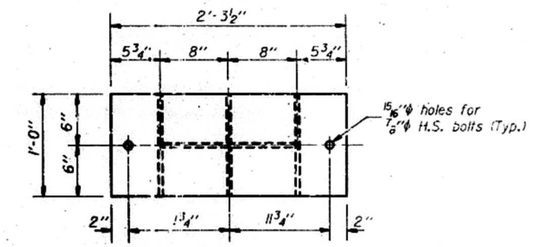


TOP PLATE OF PEDESTAL

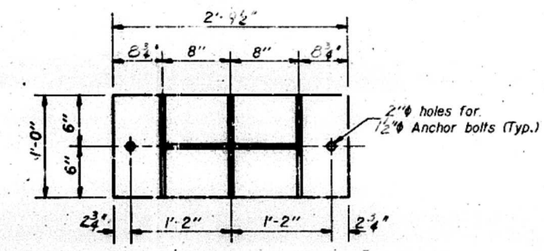


BOTTOM PLATE OF PEDESTAL

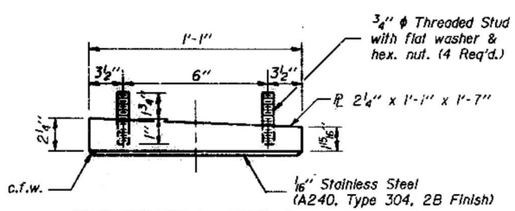


TOP BEARING ASSEMBLY

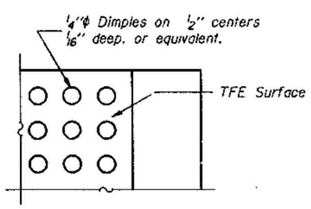


PLAN-TFE SURFACE

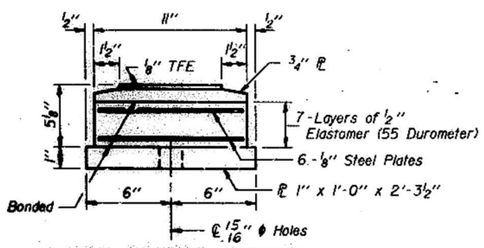


BOTTOM BEARING ASSEMBLY

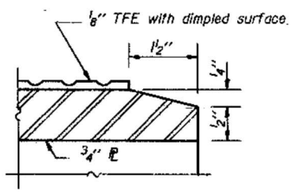


SECTION THRU TFE

Note: The 1/8" TFE sheet shall be bonded directly to the top steel plate with a two-component, medium viscosity epoxy resin, conforming to the requirements of the Federal Specification MMM-A-134, Type I. The bond agent shall be applied on the full area of the contact surfaces. Bonding of 1/8" TFE sheet during vulcanizing process will be permitted provided the process and method of adjusting assembly height is approved by the Engineer.

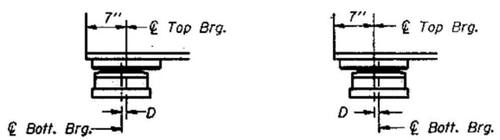


SETTING ANCHOR BOLTS AT EXP. BRG.

D=1/8" per each 100' of expansion for every 15° temp. change from the normal temp. of 50°F.

Note: The quantity of "Jacking and Cribbing" for the So. Approach - Type II Elast. Exp. Brgs. are billed on Sheet #71.

| | |
|---|---|
| DESIGNED | Patrick M. Petrone |
| CHECKED | A. S. Brown |
| DRAWN | J.T. Downing |
| CHECKED | A.S.B. |

Dec. 20 1983
Director of Highways

STRUCTURAL STEEL-BEARINGS
SOUTH APPROACH
F.A.I. RT. 74 SEC. 10D-1
PEORIA-TAZEWELL COUNTIES
STA. 151+85

STATE OF ILLINOIS
DEPARTMENT OF TRANSPORTATION

| ROUTE NO. | SECTION | COUNTY | TOTAL SHEETS | SHEET NO. |
|---|---|---|---|---|
| S.B.I. F.A. | | | | |
| FED. ROAD DIST. NO. 7 | ILLINOIS | FED. AID PROJECT - | | |

SHEET NO. 73a
75 SHEETS

* Note: See Sheet #74 of Contract Plans for Anchor Bolt installation. Anchor Bolts shall be set 11" into pier cap.

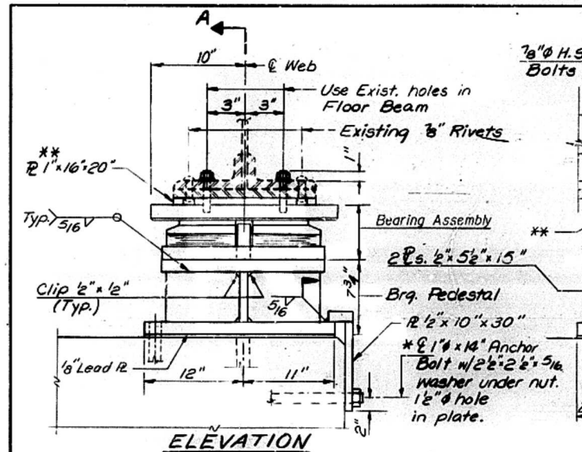


ELEVATION

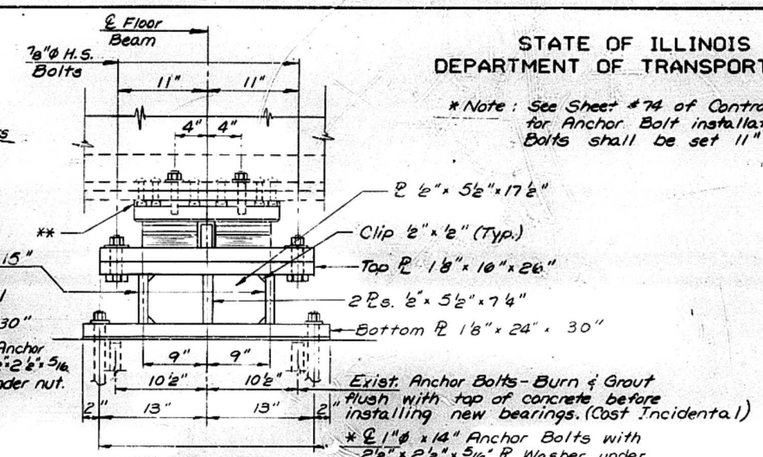


SECTION A-A

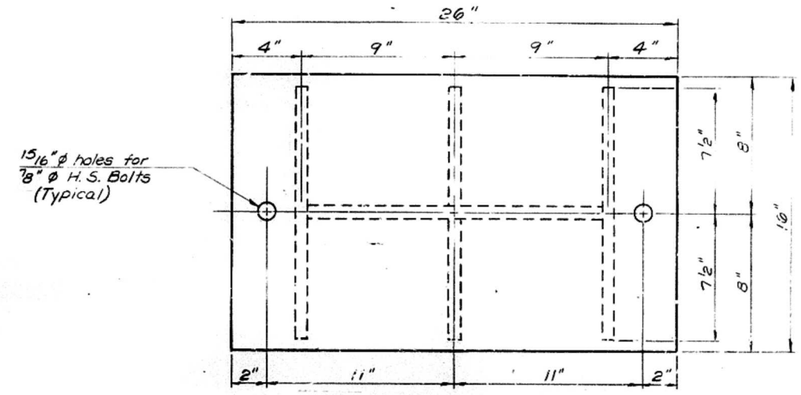


TOP PLATE OF PEDESTAL

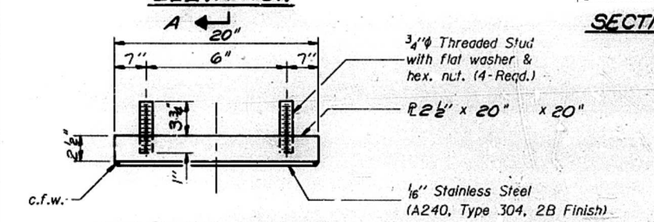


TOP BEARING ASSEMBLY

** Drill oversize holes in plate at existing rivet locations. (Drill in field).

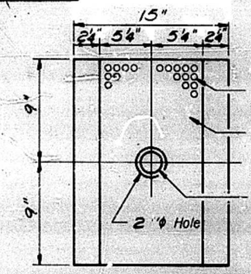


PLAN-TFE ELASTOMERIC BRG.

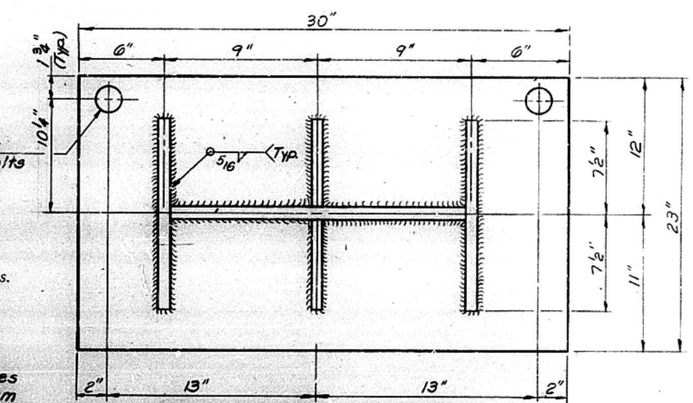


BOTTOM PLATE OF PEDESTAL

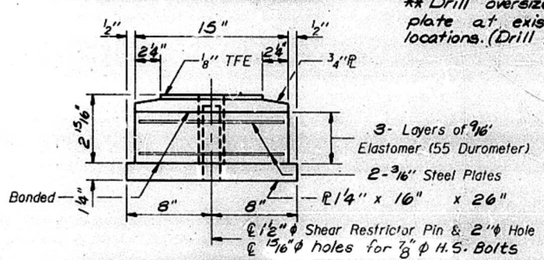


BOTTOM BEARING ASSEMBLY

TYPE III ELASTOMERIC EXP. BEARING

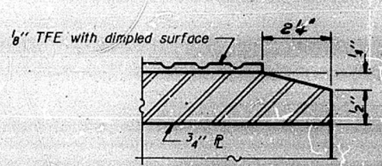


SECTION THRU TFE

Notes: The 1/8" TFE sheet shall be bonded directly to the top steel plate with a two-component, medium viscosity epoxy resin, conforming to the requirements of the Federal Specification MMM-A-134, Type I. The bond agent shall be applied on the full area of the contact surfaces.

Bonding of 1/8" TFE sheet during vulcanizing process will be permitted provided the process and method of adjusting assembly height is approved by the Engineer.

The structural steel for Pedestal & bearing plates of the Elastomeric Bearing Assembly shall conform to the requirements of AASHTO M 223 (Grade 50) See General Notes of Contract Plans for painting requirements.

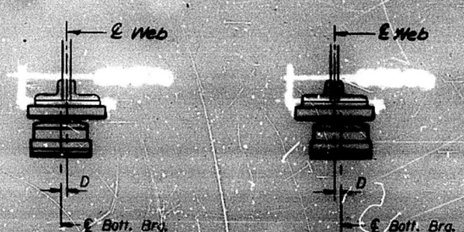


SETTING ANCHOR BOLTS AT EXP. BRG.

D=1/8" per each 100' of expansion for every 15° temp. change from the normal temp. of 50° F. Expansion Length = 420'

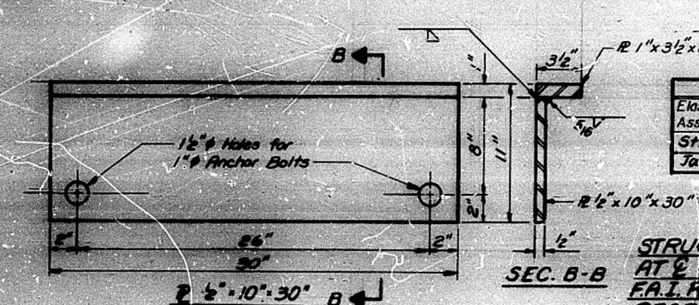


SEC. B-B

BILL OF MATERIAL

| Item | Unit | Total |
|---|---|---|
| Elastomeric Bearing Assembly Type III | Each | 2 |
| Structural Steel | Lbs. | 1,100 |
| Jacking and Cribbing | Each | 2 |

STRUCTURAL STEEL - BEARINGS AT ℄ FLOORBEAM (PIERS 3 & 8)
F.A.I. RT. 74 SEC. 10D-1
PEORIA-TAZEWELL COUNTIES
STA. 151 + 85

| | | | |
|---|---|---|---|
| DESIGNED | Patrick M. Malone | EXAMINED | |
| CHECKED | R. L. Brown | PASSED | ENGINEER OF BRIDGE DESIGN |
| DRAWN | DH | APPROVED | ENGINEER OF BRIDGES AND STRUCTURES |
| CHECKED | R. L. B. | | DIRECTOR OF HIGHWAYS |

I-2-E3 12-1-83 Revised 3-11-85 (DH)

# STATE OF ILLINOIS
# DEPARTMENT OF TRANSPORTATION

| ROUTE NO. | SECTION | COUNTY | TOTAL SHEETS | SHEET NO. |
|---|---|---|---|---|
| M.B.I. F.A. | | | 136 | 116H |
| FED. ROAD DIST. NO. 7 | | ILLINOIS | FED. AID PROJECT- | |

SHEET NO. 74
75 SHEETS

| D | E | H | K |
|---|---|---|---|
| 1" | 1 1/8" | 13/16" | 1 3/4" |
| 1 1/2" | 1 5/8" | 1 5/16" | 2 1/8" |
| 2". | 2 1/8" | 1 13/16" | 2 7/8" |
| 2 1/2" | 2 5/8" | 2 5/16" | 3 3/8" |

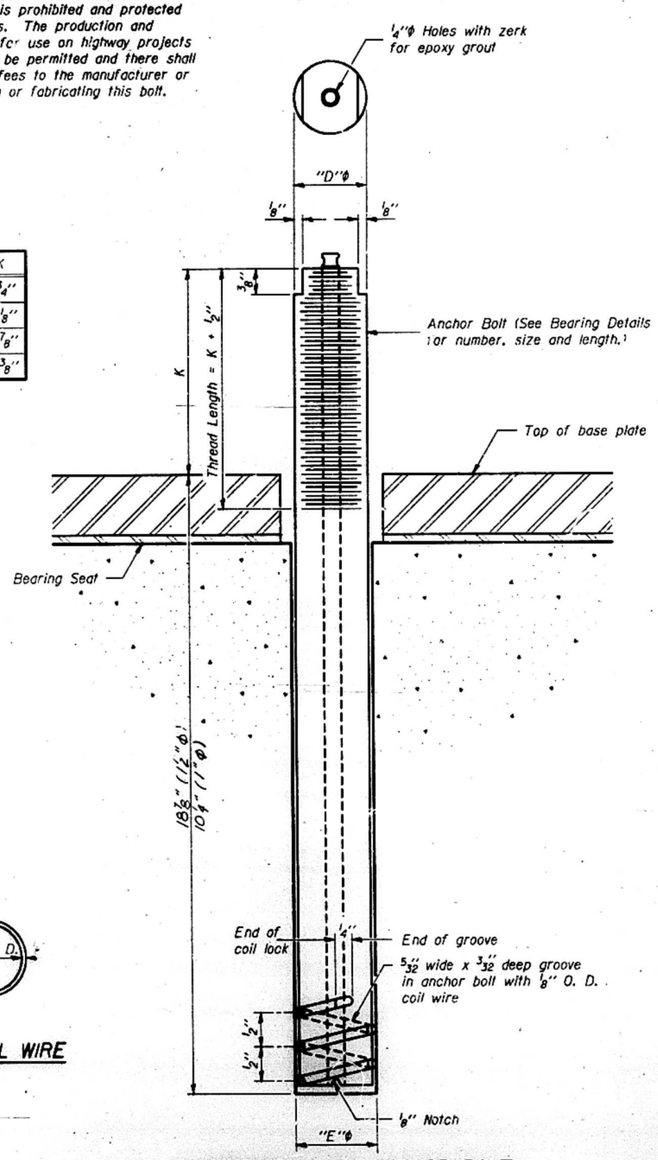


ILLINOIS COIL-LOCK ANCHOR BOLT

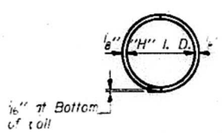


PLAN-COIL WIRE

## MATERIALS FOR ILLINOIS COIL-LOCK ANCHOR BOLT

The anchor bolt shall be fabricated from cold drawn or hot finished seamless carbon steel mechanical tubing conforming to ASTM A519, Grade 1026 and supplied with hexagonal nuts and cut washers.

The coil wire shall be made of any suitable soft steel wire.

The finished anchor bolt shall be cleaned of rust and other foreign materials and wrapped or packaged to prevent contamination until they are installed.

The epoxy grout shall be a two-component, epoxy resin bonding system comforming to ASTM C881, Type I, Grade I and of a Class suitable for the temperature at installation.

## INSTALLATION PROCEDURE for the ILLINOIS COIL-LOCK ANCHOR BOLT

1. With the coil wire in place, the bolt shall be inserted into the hole and turned clockwise to a snug fit in the hole. Nut and washer shall be placed on the bolt. The nut shall be tensioned until the steel base plates are held securely to the concrete bearing seat.
2. Epoxy grout shall be pumped through the zerk fitting with a pressure gun. Pumping shall continue until the epoxy overflows the hole around the bolt shank. After pumping is discontinued, excess epoxy shall be immediately wiped off.

## ALTERNATE ANCHOR BOLTS

The Contractor may use, at his option, the capsule or the adhesive cartridge type anchor rods that have been previously tested and given a prior approval by the Department. The Contractor shall install these anchor rods in pre-drilled holes in accordance with the manufacturer's recommendations and procedures.

The capsule or the adhesive cartridge type anchor rods shall be a two part system composed of:

1. A threaded rod stud with nut and washer conforming to ASTM A307.
2. A sealed glass capsule or a sealed glass adhesive cartridge containing premeasured amounts of the adhesive chemical.

## GENERAL NOTES

Holes in the masonry for anchor bolts shall be drilled through the base plates to the diameter and depth shown or in accordance with the manufacturer's recommendation after beams or girders have been erected and adjusted.

Prior to setting the bolts, the holes shall be dry and all dust and loose particles shall be removed by the use of compressed air or vacuuming.

The anchor bolts, furnished and installed and including the epoxy grout or capsules shall not be paid for separately but shall be included in the unit bid price for [illegible].

| | |
|---|---|
| DESIGNED | Patrick M Petrus |
| CHECKED | J. L. Brown |
| DRAWN | JCS |
| CHECKED | D. L. B. |

ABB-1 6-15-83

EXAMINED Dec. 22 1983
PASSED
APPROVED
DIRECTOR OF HIGHWAYS

**ANCHOR BOLT DETAILS FOR BEARINGS**

F.A.I. RT. 74 ~ SEC. 10 D-1
PEORIA - TAZEWELL COUNTIES
STATION 151 + 85

STATE OF ILLINOIS
DEPARTMENT OF TRANSPORTATION

| ROUTE NO. | SECTION | COUNTY | TOTAL SHEETS | SHEET NO. |
|---|---|---|---|---|
| F.A.I. F.A. | | | 136 | 116-I |

SHEET NO. 75
75 SHEETS

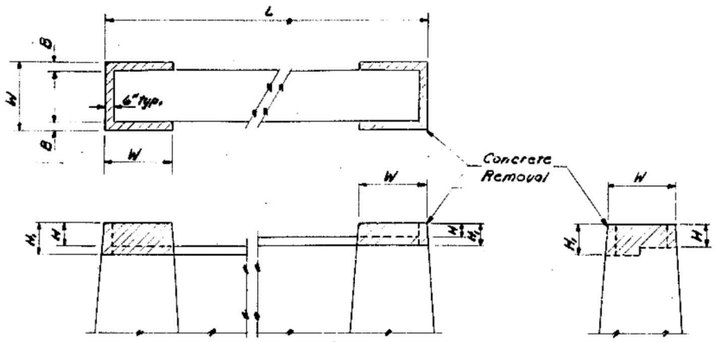


ELEV. PIERS A,1,2,9,10,11 & 12

END VIEW

| Pier | L | H | $H_1$ | W | B | Conc. Removal (Cu. Yd.) |
|---|---|---|---|---|---|---|
| A | 82'-10½" | 1'-1½" | 1'-2½" | 8'-2" | 6" | 0.5 |
| 1 | 69'-7⅞" | 1'-2" | 1'-2⅞" | 8'-2" | 6" | 0.5 |
| 2 | 60'-9⅝" | 1'-2½" | 1'-2½" | 8'-2" | 6" | 0.5 |
| 10 | 59'-0" | 11" | 11" | 8'-3" | 7½" | 0.5 |
| 11 | 59'-0" | 1'-6½" | 1'-6½" | 3'-9" | 6" | 0.5 |
| 12 | 59'-0" | 1'-0½" | 1'-0½" | 3'-9" | 6" | 0.5 |
| 9 | 59'-0" | 1'-4½" | 1'-4½" | 4'-3" | 7½" | 0.5 |

CURTAIN WALL REMOVAL

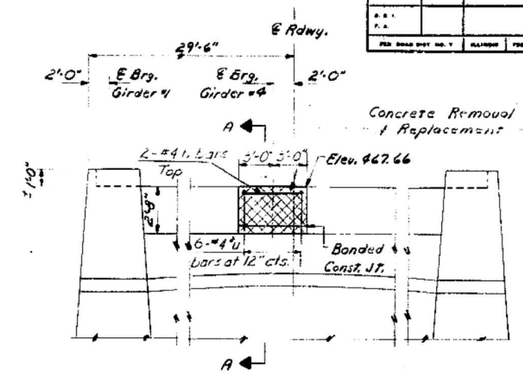


PIER 12
(Looking South)

+ Drill 2-¾"ø x 12" holes and epoxy grout U bars (see Special Provisions)
Existing reinforcement extending into removed area shall be cleaned and incorporated into new construction.

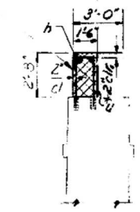


SECTION A-A

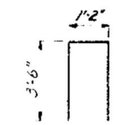


BAR #4

BILL OF MATERIAL

| Bar | No. | Size | Length | Shape |
|---|---|---|---|---|
| h | 2 | #4 | 5'-9" | — |
| U | 6 | #4 | 8'-2" | ⊓ |
| Class X Concrete | | | Cu. Yd. | 0.9 |
| Concrete Removal | | | Cu. Yd. | 4.5 |
| Reinforcement Bars | | | Lbs. | 40 |

| | |
|---|---|
| DESIGNED | Patrick M Thome |
| CHECKED | D. J. Brown |
| DRAWN | A.L.B., m.c. |
| CHECKED | D. J. B. |

Dec. 20 1983
ENGINEER
PROJECT ENGINEER
APPROVED
DIRECTOR OF HIGHWAYS

SUBSTRUCTURE REPAIR & CURTAIN WALL REMOVAL
F.A.I. ROUTE 74 - SECTION 10D-1
PEORIA-TAZEWELL COUNTIES
STA. 151+85.00

| ROUTE | SECTION | COUNTY | SHEET NO. / TOTAL |
|---|---|---|---|
| FAI 74 | (72,90) | PEORIA | 136 / 117 |
| MKU. | 100-1 | TAZEWELL | |
| PROJ | STA | | |

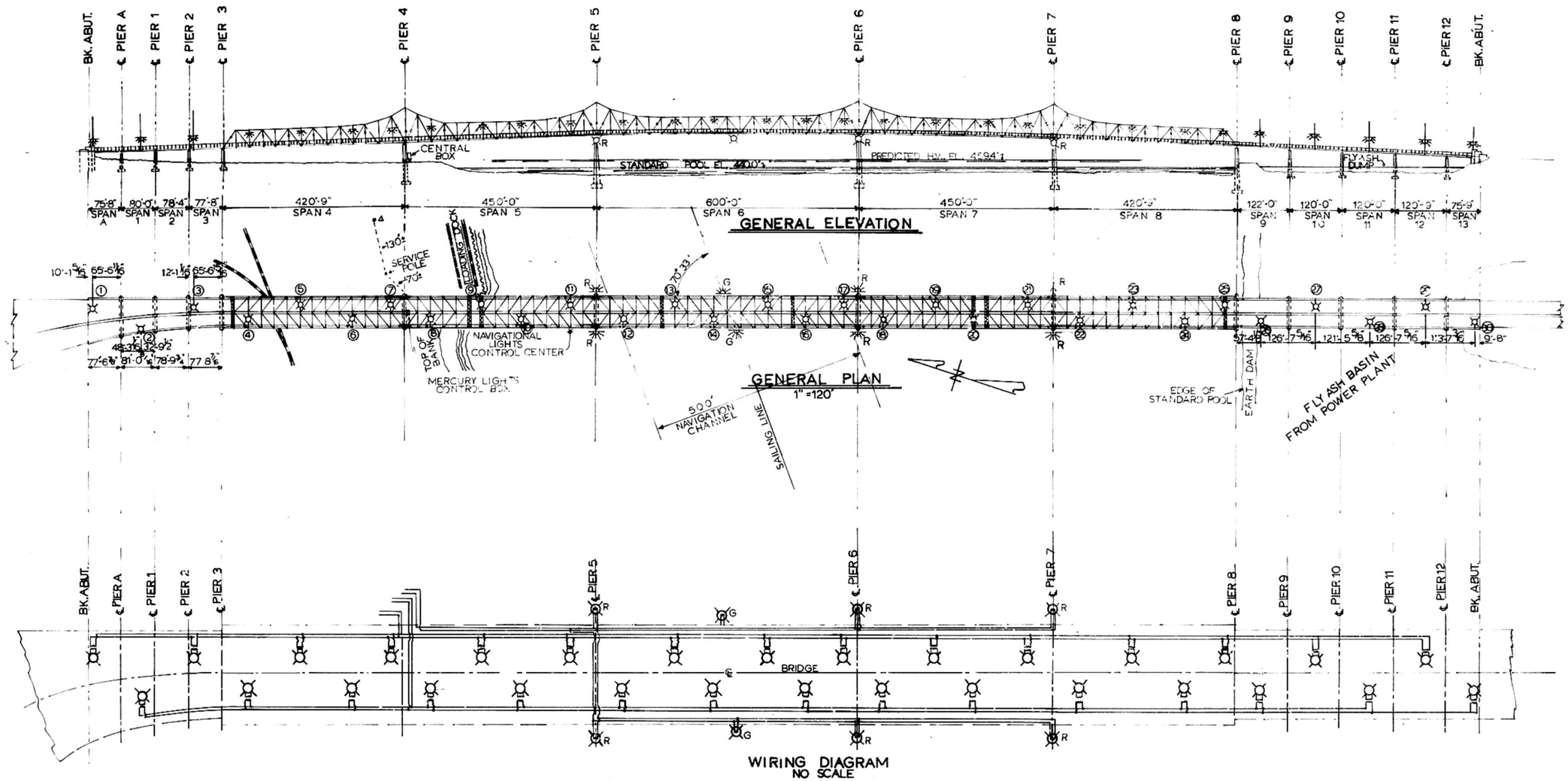


ELECTRIC CABLE IN CONDUIT, 600 V (XLP-TYPE USE) ½ NO. 6
13,364 LIN. FT.

POLE METAL 33 FT. M.H. 6'-0" DAVIT ARM
8 EACH

MAINTENANCE AND REMOVAL OF LIGHTING SYSTEM COMPLETE
1 LUMP SUM

NAVIGATIONAL LIGHTING SYSTEM
1 LUMP SUM

CONTROL INSTALLATION, TYPE CB-RCS-100-240
1 EACH

ELECTRIC CABLE IN CONDUIT, 600 V (XLP-TYPE USE) ½ NO. 12
2,500 LIN. FT.

CONDUIT SYSTEM, LUMP SUM
1 LUMP SUM

REINSTALL EXISTING LUMINAIRE AND LAMP
30 EACH

| ROUTE | SECTION | COUNTY | TOT SHTS | SHEET # |
|---|---|---|---|---|
| FAI 74 | (72,90) 100-1 | PEORIA TAZEWELL | 136 | 118 |

SHEET #
SHEETS

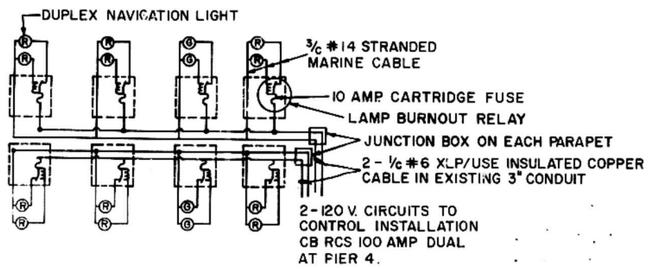


WIRING DIAGRAM - NAVIGATION LIGHTING

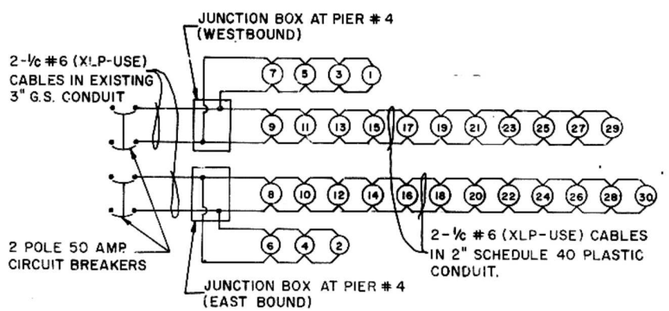


WIRING DIAGRAM - HIGHWAY LIGHTING

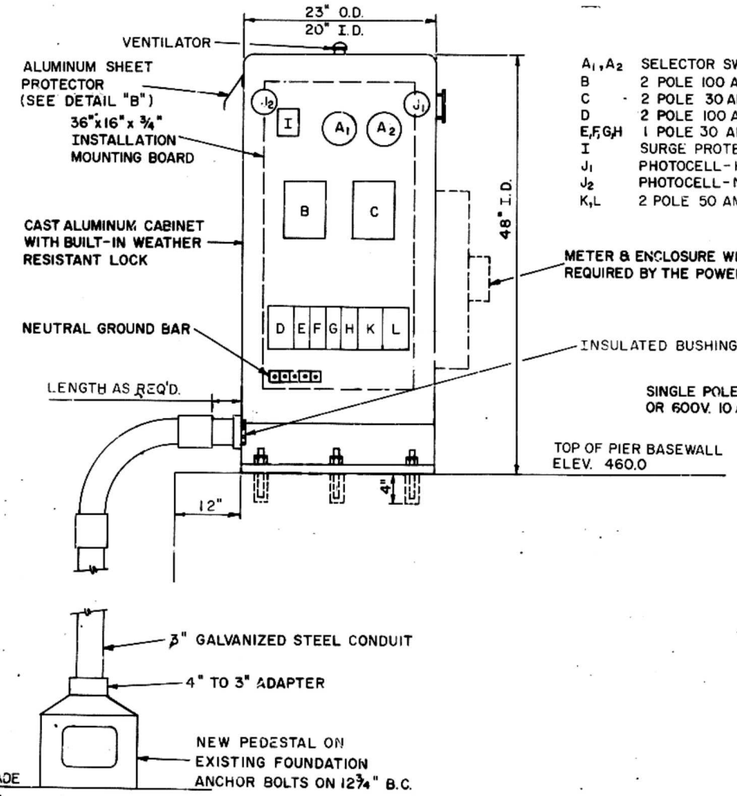


CABINET, FOUNDATION & DIAGRAMMATIC ASSEMBLY
(FRONT VIEW)

| | |
|---|---|
| $A_1, A_2$ | SELECTOR SWITCHES |
| B | 2 POLE 100 AMP CONTACTOR |
| C | 2 POLE 30 AMP CONTACTOR |
| D | 2 POLE 100 AMP BREAKER. |
| E,F,G,H | 1 POLE 30 AMP BREAKERS |
| I | SURGE PROTECTOR |
| $J_1$ | PHOTOCELL - HIGHWAY LIGHTING |
| $J_2$ | PHOTOCELL - NAVIGATION LIGHTING |
| K,L | 2 POLE 50 AMP BREAKERS |

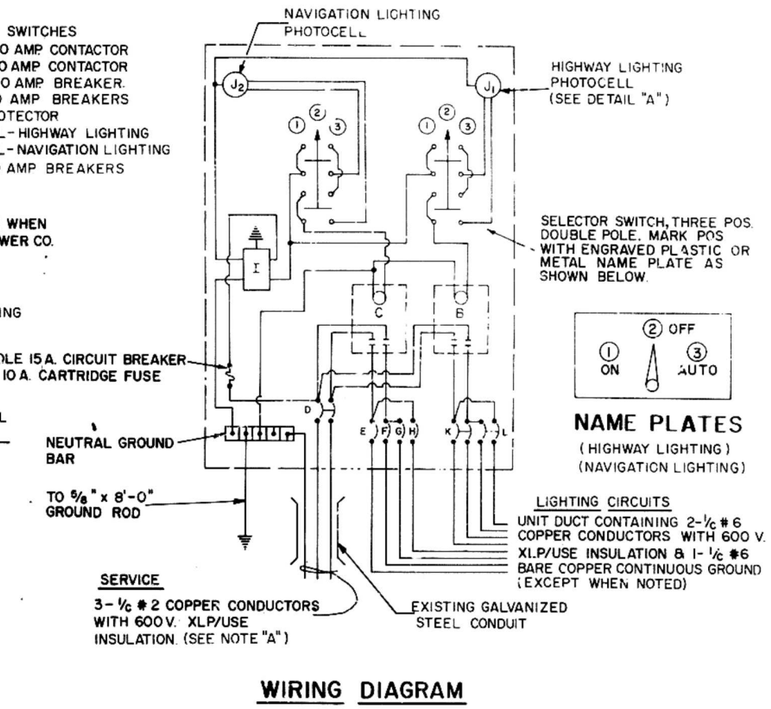





NAME PLATES
(HIGHWAY LIGHTING)
(NAVIGATION LIGHTING)

WIRING DIAGRAM

NOTE:
WIRING SHALL BE PANEL BOARD FASHION. ALL BENDS SHALL BE RIGHT ANGLES. ALL RUNS SHALL BE VERTICAL OR PARALLEL TO PANEL BOARD. WIRES SHALL BE GROUPED OR LACED.

NOTE A:
NEW UNDERGROUND SERVICE CABLE SHALL BE INSTALLED IN EXISTING CONDUIT BETWEEN THE EXISTING SERVICE POLE AND THE NEW CONTROL CABINET.

NOTE "A"
WHERE UNMETERED SERVICE IS PROVIDED BY THE POWER COMPANY, THE PHOTOCELL, RECEPT., & WINDOW COVER MAY BE OMITTED. THE CONTRACTOR SHALL FURNISH AND INSTALL 2-1/c #12 AND AERIAL WIRE IF REQUIRED FROM THE CONTROL INSTALLATION TO THE POWER COMPANY'S PHOTOCELL CONTROL AND CONNECT PER WIRING DIAGRAM.

NOTE "B"
THE UNDERGROUND SERVICE SHALL BE 30' MINIMUM AND 150' MAXIMUM. TOTAL AERIAL & UNDERGROUND SERVICE BETWEEN THE CONTROL INSTALLATION AND PRIMARY TRANSFORMER SHALL BE 250'.

☒ 240 V. SERVICE
☐ 480 V. SERVICE

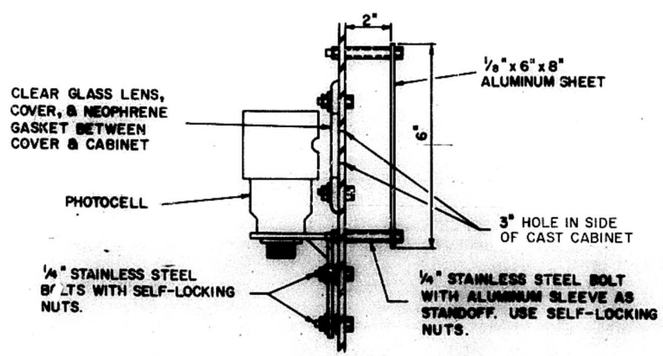


DETAIL "A"
HIGHWAY LIGHTING PHOTOCELL

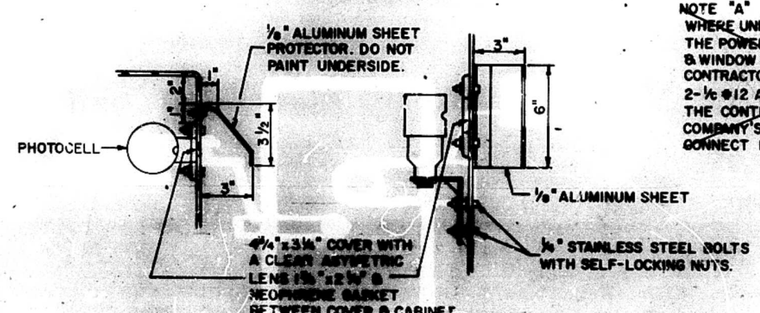


DETAIL "B"
NAVIGATION & AVIATION OBSTRUCTION LIGHTS PHOTOCELL

| | |
|---|---|
| DRAWN FEB.25, 1983 BY: J.L. PUTNAM | |
| REVISED | OCT. 4, 1983 |

DUAL CONTROL INSTALLATION

TYPE CB RCS 100

| ROUTE | SECTION | COUNTY | TOTAL SHTS | SHEET # |
|---|---|---|---|---|
| FAI 74 | (72,90) 10D-1 | PEORIA TAZEWELL | 136 | 119 |
| FED. RD. DIST. #7 | ILLINOIS | FEDERAL AID PROJ. | | |

SHEET #

SHEETS

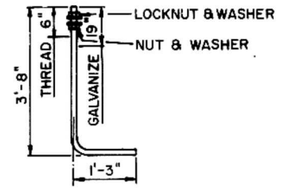


1"ϕ ANCHOR BOLT

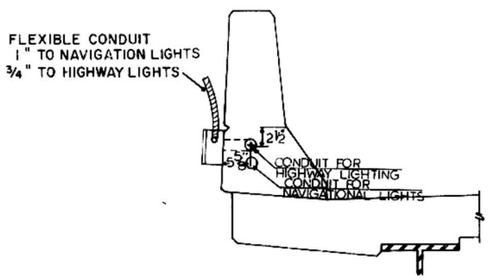


SECTION B-B

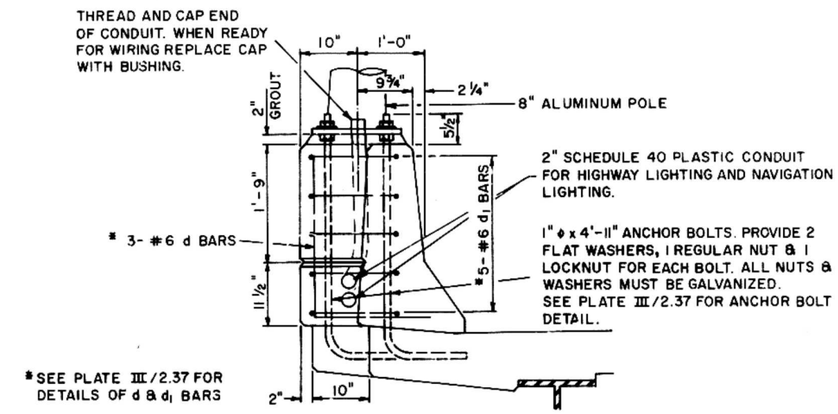


SECTION A-A

NOTE: GROUT MIXTURE SHALL CONSIST OF 1 PART SAND, 1 PART CEMENT & 1 PART CHIPS (PEA GRAVEL). THE GROUT SHALL CONTAIN WATER FOR A 1" SLUMP.

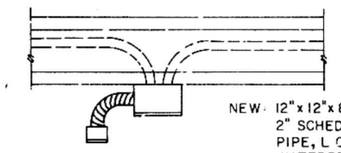

NEW 12"x12"x8" JUNCTION BOX, 2" SCHEDULE 40 PLASTIC PIPE, L CONDULET, FLEXIBLE WATERPROOF CONDUIT, & PARAPET.

(TOP VIEW)

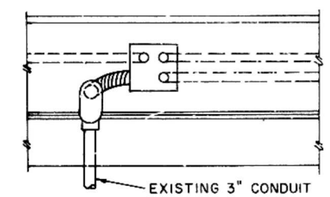


(FRONT VIEW)

DETAIL "A"

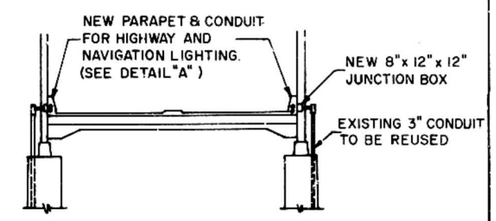


LIGHTING DETAILS AT PIER 4

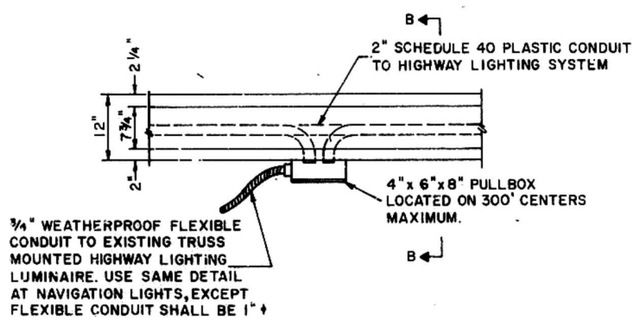


PLAN

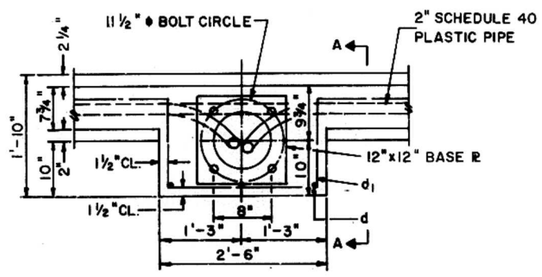


PLAN

NOTE: COST OF ANCHOR BOLTS & CONDUIT IS INCIDENTAL.

DRAWN BY J.L. PUTNAM
OCTOBER 3, 1983

| ROUTE | SECTION | COUNTY | Total Shts. | SHEET # |
|---|---|---|---|---|
| FAI 74 | (7290) 10D-1 | PEORIA TAZEWELL | 136 | 120 |
| Fed. Rd. Dist. #7 | ILLINOIS | Fed. Aid Proj. | | |

SHEET #

SHEETS

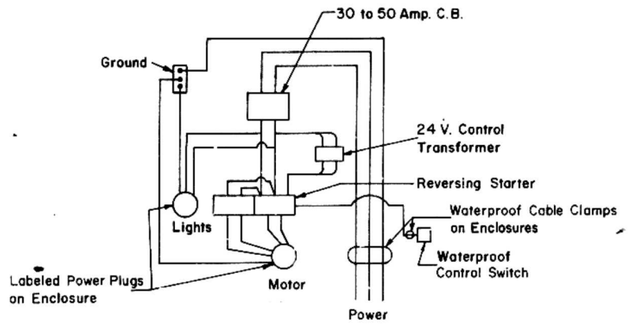


NOTE:
Manufacturer of lowering device shall factory wire the winch drive electrical control system. Cable attachment to plugs and polarity must be observed to prevent faults to ground when plugs are changed between lights and motor circuits. Alternate control schemes shall be approved by the Engineer.

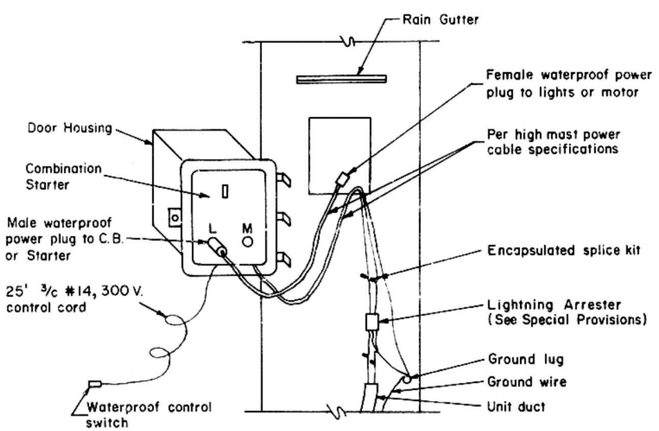


HIGH MAST POLE WIRING DETAILS

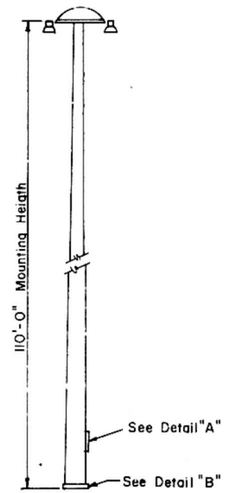


☐ HIGH MAST POLE

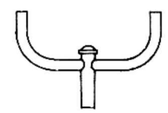

☐ TWIN TENON

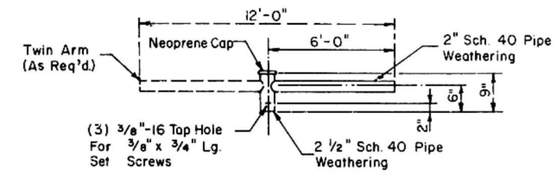


☐ TENON MOUNTED BRACKET ARM

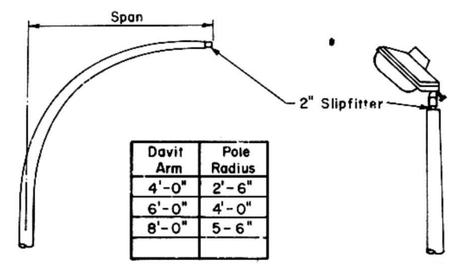


| Davit Arm | Pole Radius |
|---|---|
| 4'-0" | 2'-6" |
| 6'-0" | 4'-0" |
| 8'-0" | 5-6" |
| | |

☒ DAVIT ARM

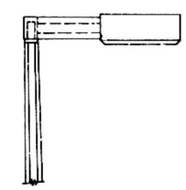

☐ TENON

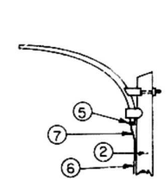


Tie rod or truss type arm optional

☐ SHORT BRACKET

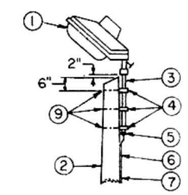


☐ MAST ARM

☐ TENON

1. Luminaire
2. Wood pole, class 3 or better
3. 2 1/2" Galv. steel conduit
4. Single offset pole band
5. Conduit bushing
6. Cable clamps on 2'-0" centers
7. 2/c #12 type USE cable
8. 1" Galv. steel conduit 10'-0" in length
9. 5/8" ϕ hot dipped galvanized bolt with flat washer and locknut (3 Req'd.)
10. Conduit clamps on 3'-0" centers
11. Unit duct
12. Threaded reducer
13. "C" Condulet, threaded
14. 1 1/2" Galv. steel conduit for 1 unit duct or 3" Galv. steel conduit for 2 or 3 unit ducts

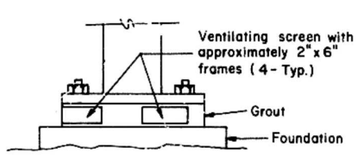


DETAIL "B"

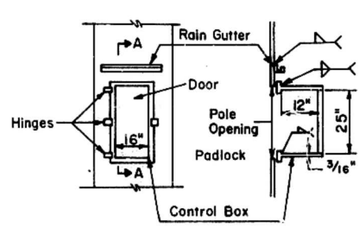


Dimensions are approximate - (See Special Provisions)

DETAIL "A"

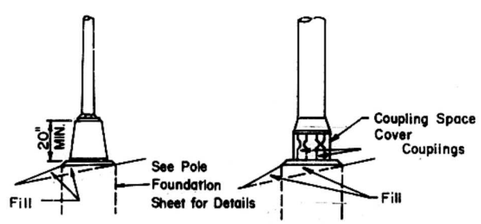


☐ TRANSFORMER BASE

☒ BREAKAWAY COUPLING

SECTION A-A

☐ FRANGIBLE

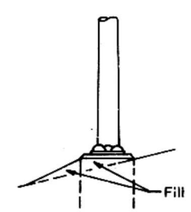


☒ ANCHOR

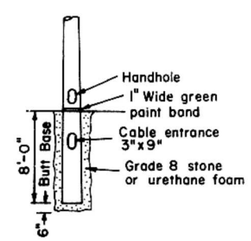


☐ BUTT BASE

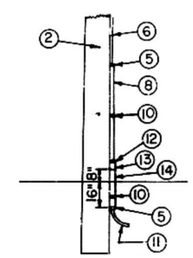


| POLE LENGTH | DEPTH IN GROUND |
|---|---|
| 65' | 12' |
| 60' | 10' |
| 55' | 9' |
| 50' | 8' |
| 45' | 7' |
| 40' | 6.5' |
| 35' | 6' |
| 30' | 5.5' |

☐ POLE, WOOD

☒ METAL OR ☐ CONCRETE

Drn. By: J.L.P.
March 20, 1980

POLE STANDARDS

| ROUTE | SECTION | COUNTY | TOT. SHTS | SHEET # |
|---|---|---|---|---|
| FAI 74 | (72,90) 100-1 | PEORIA-TAZEWELL | 136 | 121 |
| FED RD DIST. #7 | ILLINOIS | FED. AID PROJ. | | |

SHEET #
SHEETS

## HIGH MAST DESIGN TABLE

| TOWER # | STATION # | DIM "A" | | ELEV. TOP | ELEV. BTM |
|---|---|---|---|---|---|
| | | | | | |

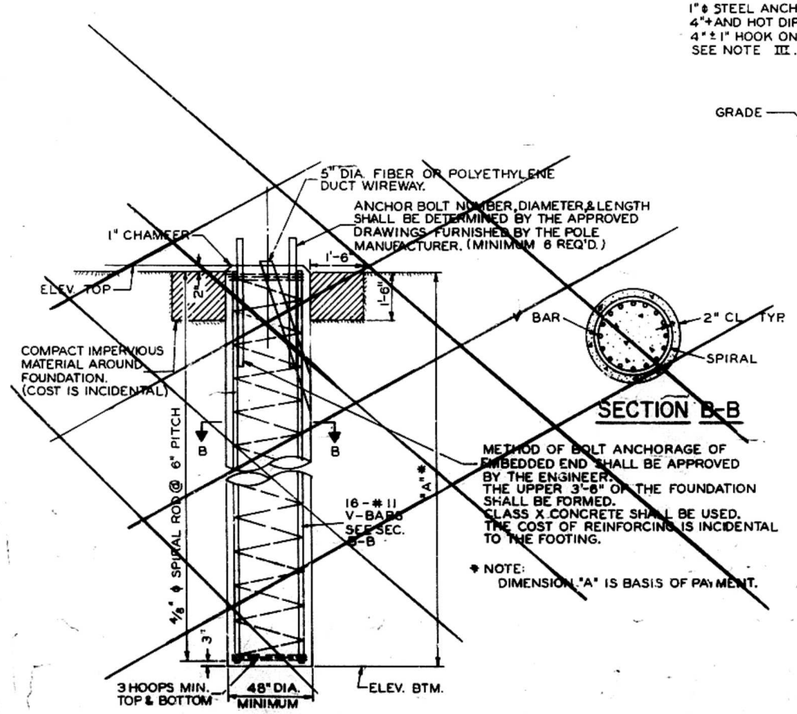


## HIGH MAST POLE FOUNDATION

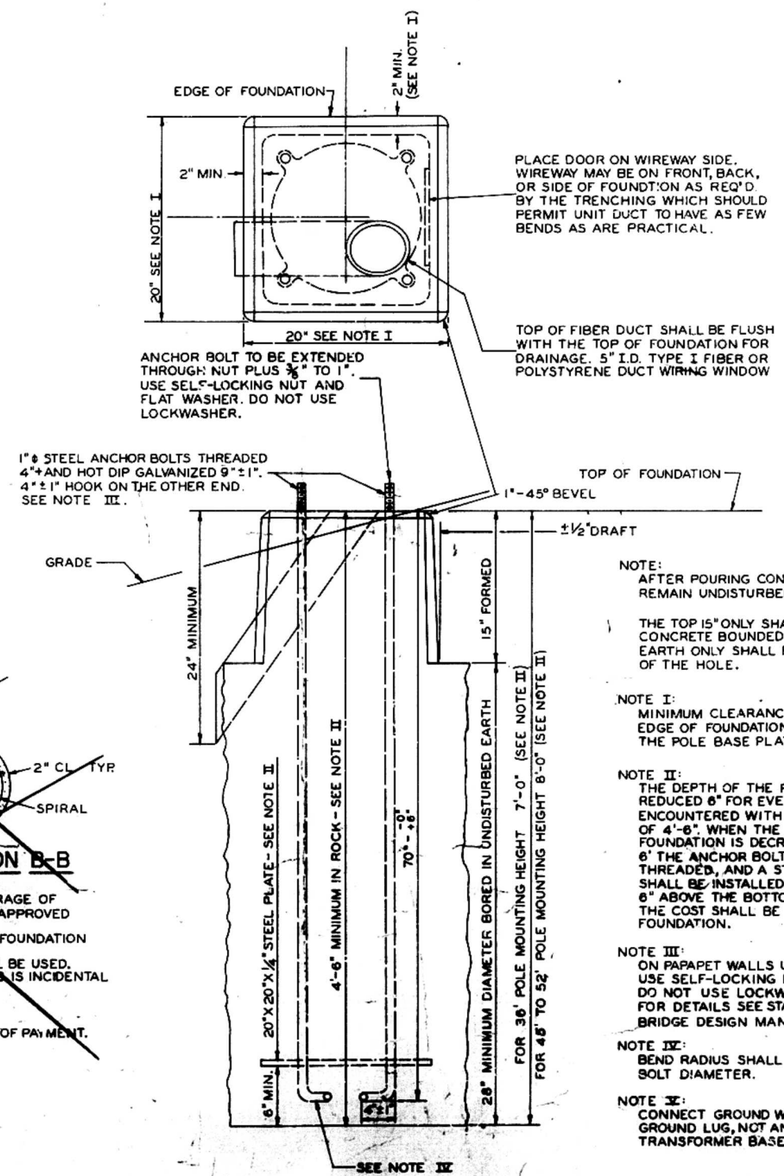


NOTE:
AFTER POURING CONCRETE, THE FORM SHALL REMAIN UNDISTURBED OVERNIGHT.

THE TOP 15" ONLY SHALL BE FORMED. CONCRETE BOUNDED BY UNDISTURBED EARTH ONLY SHALL FILL THE REMAINDER OF THE HOLE.

NOTE I:
MINIMUM CLEARANCE FROM THE OUTSIDE EDGE OF FOUNDATION TO ANY PART OF THE POLE BASE PLATE SHALL BE 2".

NOTE II:
THE DEPTH OF THE FOUNDATION MAY BE REDUCED 6" FOR EVERY FOOT OF ROCK ENCOUNTERED WITH A MINIMUM DEPTH OF 4'-6". WHEN THE DEPTH OF THE FOUNDATION IS DECREASED TO LESS THAN 6' THE ANCHOR BOLTS SH. BE CUT, THREADED, AND A STEEL PLATE 20"X20"X 1/4" SHALL BE INSTALLED ON THE ANCHOR BOLTS 6" ABOVE THE BOTTOM OF THE EXCAVATION. THE COST SHALL BE INCIDENTAL TO THE FOUNDATION.

NOTE III:
ON PARAPET WALLS USE 1 1/4" ϕ ANCHOR BOLTS. USE SELF-LOCKING NUT AND FLAT WASHER. DO NOT USE LOCKWASHER. FOR DETAILS SEE STANDARD III/2.35 OF THE BRIDGE DESIGN MANUAL.

NOTE IV:
BEND RADIUS SHALL BE FOUR TIMES THE BOLT DIAMETER.

NOTE V:
CONNECT GROUND WIRES TO POLE BASE GROUND LUG, NOT ANCHOR BOLTS OR TRANSFORMER BASE.

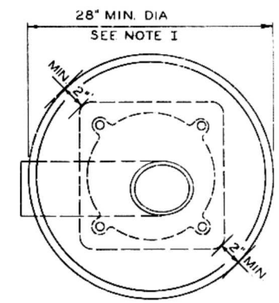


## ALTERNATE FOUNDATION

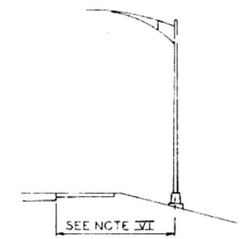


NOTE VI
LOW MOUNT POLE FOUNDATION SETBACK FROM EDGE OF PAVEMENT SHALL BE 20' MINIMUM FOR BREAKAWAY BASE POLES; 5' BEHIND GUARDRAIL OR OTHER PROTECTIVE BARRIERS UNLESS OTHERWISE SHOWN ON THE PLANS OR AS DIRECTED BY THE ENGINEER

DESIGN DATA

| BOLT CIRCLE | "A" | "B" | MOUNTING HEIGHT |
|---|---|---|---|
| 15" | 10" | 72" | 55' |
| 15" | 10" | 60" | 50' |
| 15" | 8" | 60" | 45' |
| 11 1/2" | 8" | 60" | 35' |

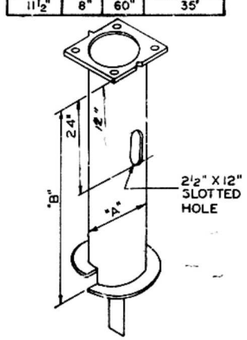


## POLE FOUNDATION STEEL

| | |
|---|---|
| DRAWN BY J.L.P. JANUARY 1, 1976 | |
| J.L.P. | 10-15-76 |
| J.L.P. | 1-1-77 |
| J.L.P. | 4-4-77 |
| J.L.P. | 3-9-78 |
| J.L.P. | 6-6-78 |
| J.L.P. | 11-10-78 |

POLE FOUNDATIONS

| ROUTE | | SECTION | COUNTY | SHEET TOTAL | SHEET NO. |
|---|---|---|---|---|---|
| FAI | 74 | (72,90) 10D-1 | PEORIA TAZEWELL | 136 | 122 |
| MKD. | | | | | |
| PROJ. | | STA. | TO STA. | | |

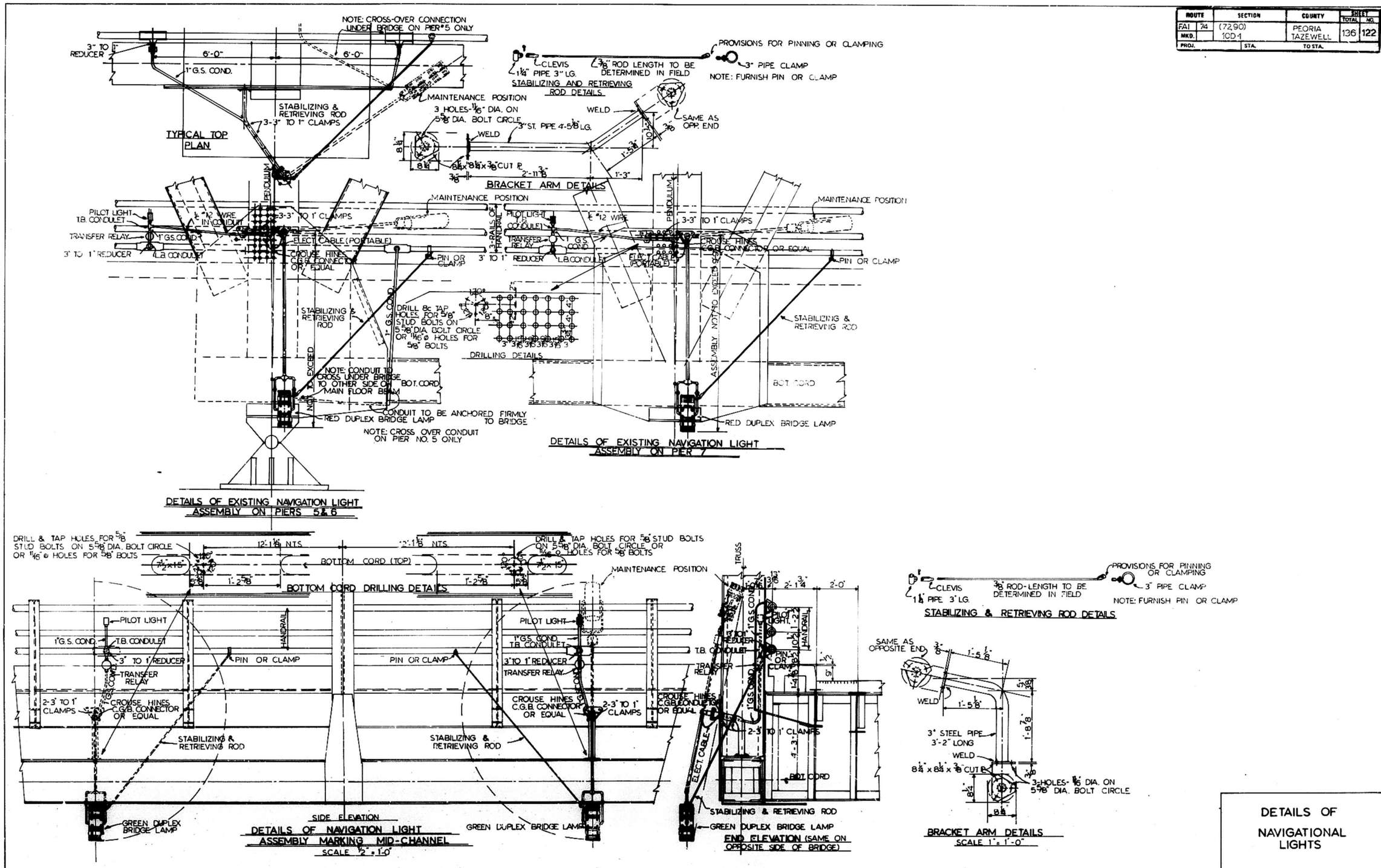


DETAILS OF NAVIGATIONAL LIGHTS

| ROUTE NO. | SEC. | COUNTY | TOTAL SHEETS | SHT. NO. |
|---|---|---|---|---|
| FAI 74 (7290) | 100-J | PEORIA TAZEWELL | 136 | 123 |

FED. ROAD DIST. NO. | ILLINOIS | PROJECT

THIS SHEET FOR INFORMATION ONLY

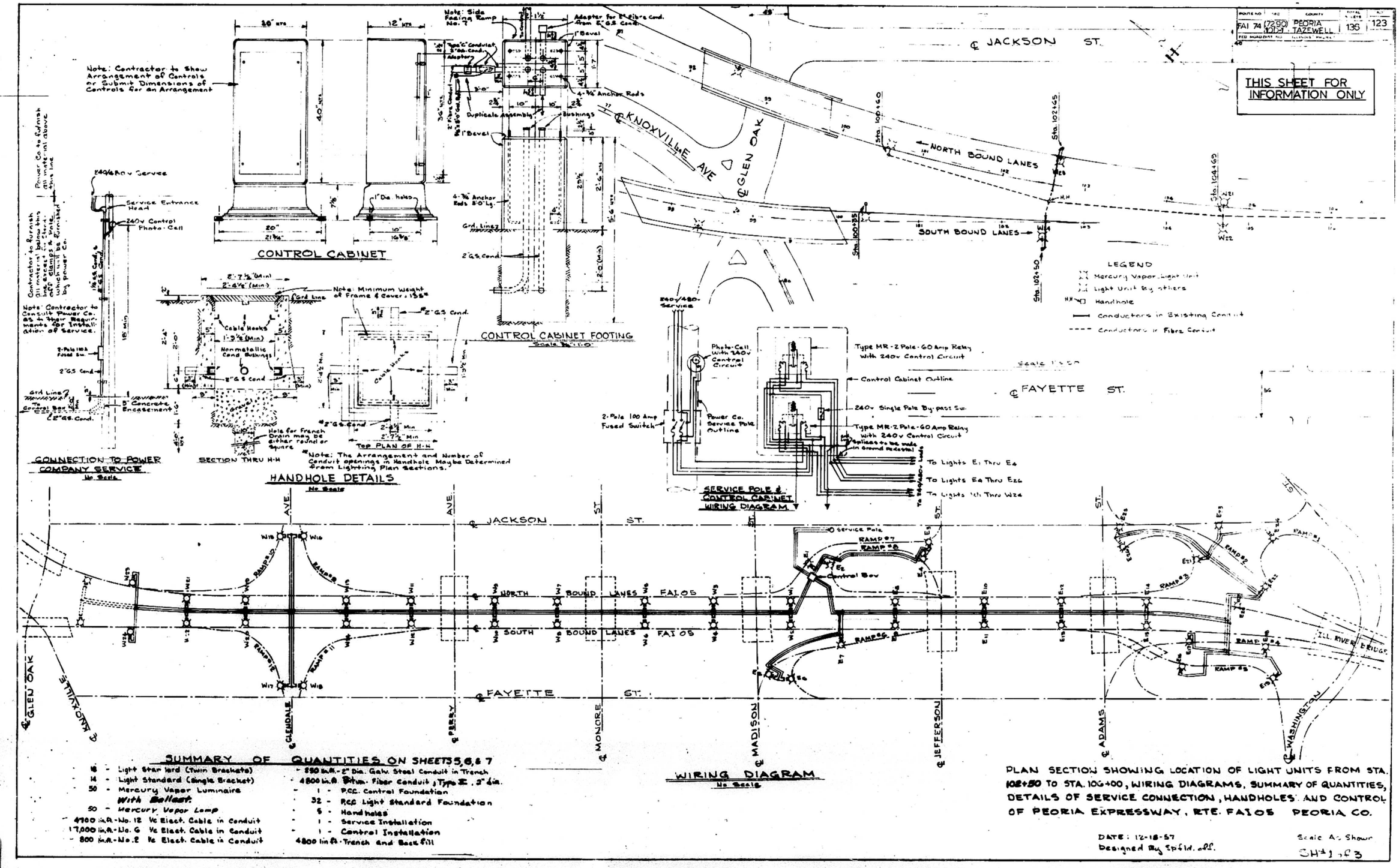


## SUMMARY OF QUANTITIES ON SHEETS 5, 6, & 7

- 16 - Light Standard (Twin Brackets)
- 14 - Light Standard (Single Bracket)
- 50 - Mercury Vapor Luminaire *With Ballast*
- 50 - Mercury Vapor Lamp
- 4900 lin.ft. - No. 12 Vc Elect. Cable in Conduit
- 17,000 lin.ft. - No. 6 Vc Elect. Cable in Conduit
- 800 lin.ft. - No. 2 Vc Elect. Cable in Conduit
- 550 lin.ft. - 2" Dia. Galv. Steel Conduit in Trench
- 4800 lin.ft. Bitum. Fiber Conduit, Type II, 2" dia.
- 1 - P.C.C. Control Foundation
- 32 - P.C.C. Light Standard Foundation
- 5 - Handholes
- 1 - Service Installation
- 1 - Control Installation
- 4800 lin.ft. Trench and Back Fill

PLAN SECTION SHOWING LOCATION OF LIGHT UNITS FROM STA. 102+50 TO STA. 106+00, WIRING DIAGRAMS, SUMMARY OF QUANTITIES, DETAILS OF SERVICE CONNECTION, HANDHOLES AND CONTROL OF PEORIA EXPRESSWAY, RTE. FAI 05 PEORIA CO.

DATE: 12-18-57
Designed By Spfld. off.

Scale As Shown

SH. #1 of 3

| ROUTE NO. | SEC. | COUNTY | TOTAL SHEETS | SHEET NO. |
|---|---|---|---|---|
| FAI 74 | (7290) 10D-1 | PEORIA TAZEWELL | 136 | 124 |

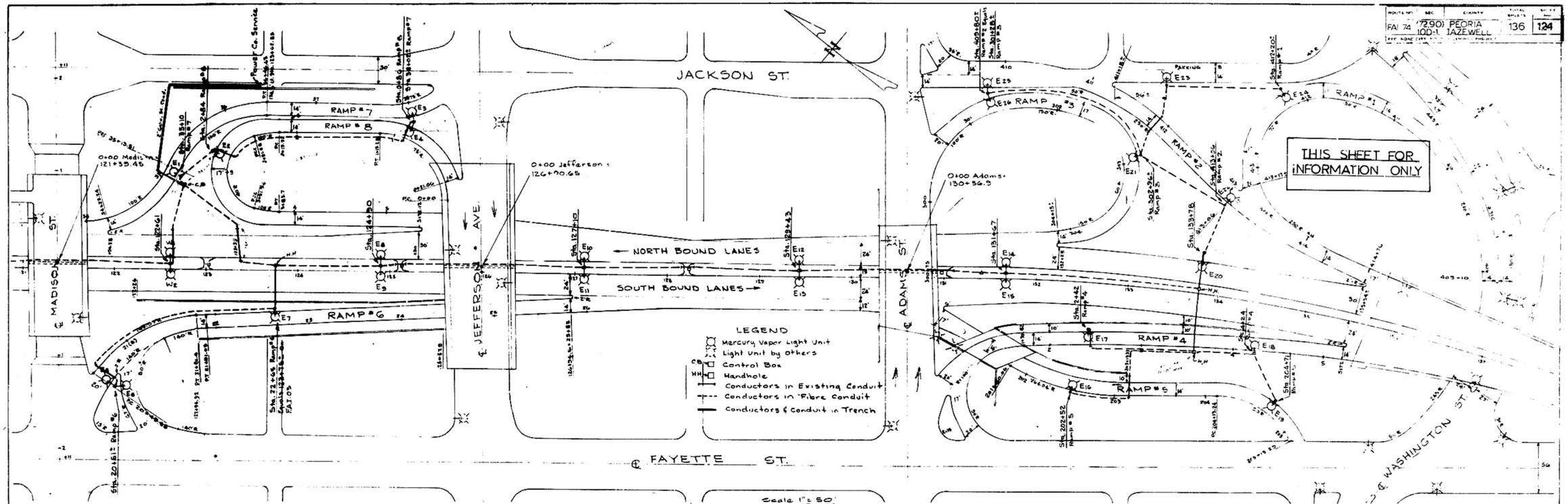


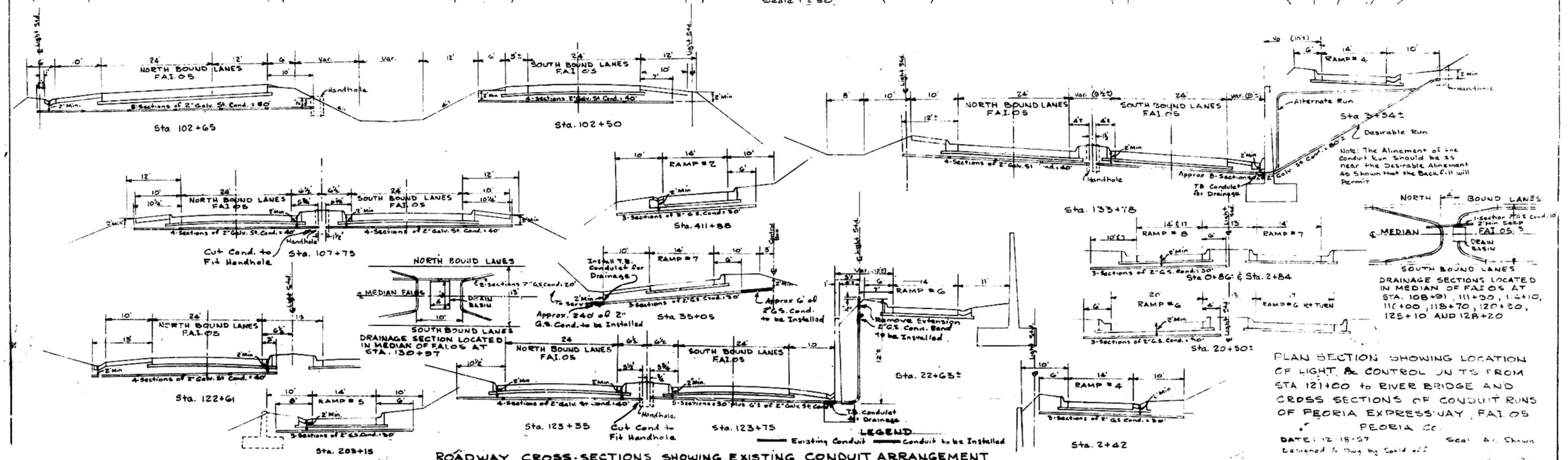


ROADWAY CROSS-SECTIONS SHOWING EXISTING CONDUIT ARRANGEMENT

Scale 1" = 10'

PLAN SECTION SHOWING LOCATION OF LIGHT & CONTROL UNITS FROM STA 121+00 to RIVER BRIDGE AND CROSS SECTIONS OF CONDUIT RUNS OF PEORIA EXPRESSWAY, FAI 05

PEORIA CO.

DATE: 12-18-57 Scale As Shown

Designed & Drawn by Sheid ...

H-3 of 3

| FAI 74 | (72,90) 100-1 | PEORIA TAZEWELL | 136 | 125 |
|---|---|---|---|---|
| FED. ROAD DIST. NO. | ILLINOIS | PROJECT | | |

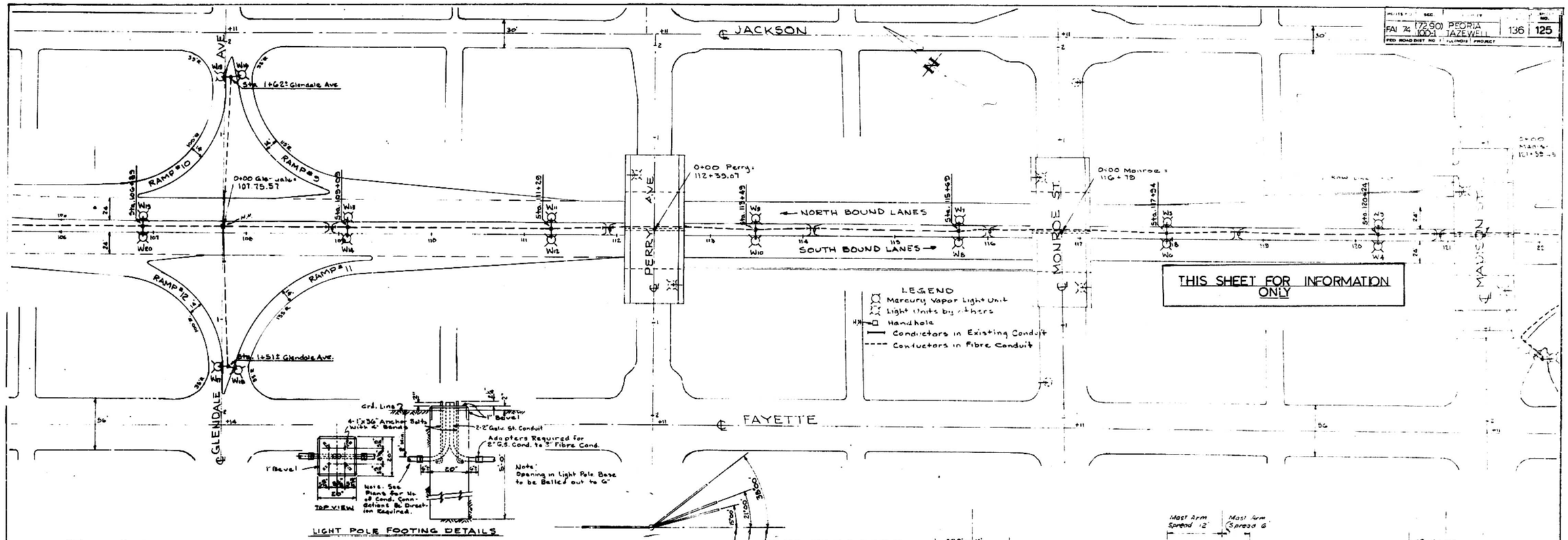


PLAN SECTION SHOWING LOCATION OF LIGHT UNITS FROM STA. 106+00 TO STA. 122+00 AND LIGHT POLE ASSEMBLY DETAILS & LOCATIONS FROM PAVT. EDGE OF PEORIA EXPRESSWAY, F.A.I. 05

PEORIA CO.

DATE. 12-18-57

Scale 1"=50

Designed & Dwg By Spild off.

SH # 2 of 3.

| ROUTE | | SECTION | COUNTY | SHEET TOTAL | SHEET NO |
|---|---|---|---|---|---|
| FAI | 74 | (72,90) | PEORIA TAZEWELL | 136 | 126 |
| MKD. | | 10D-1 | | | |
| PROJ | | STA. | TO STA. | | |

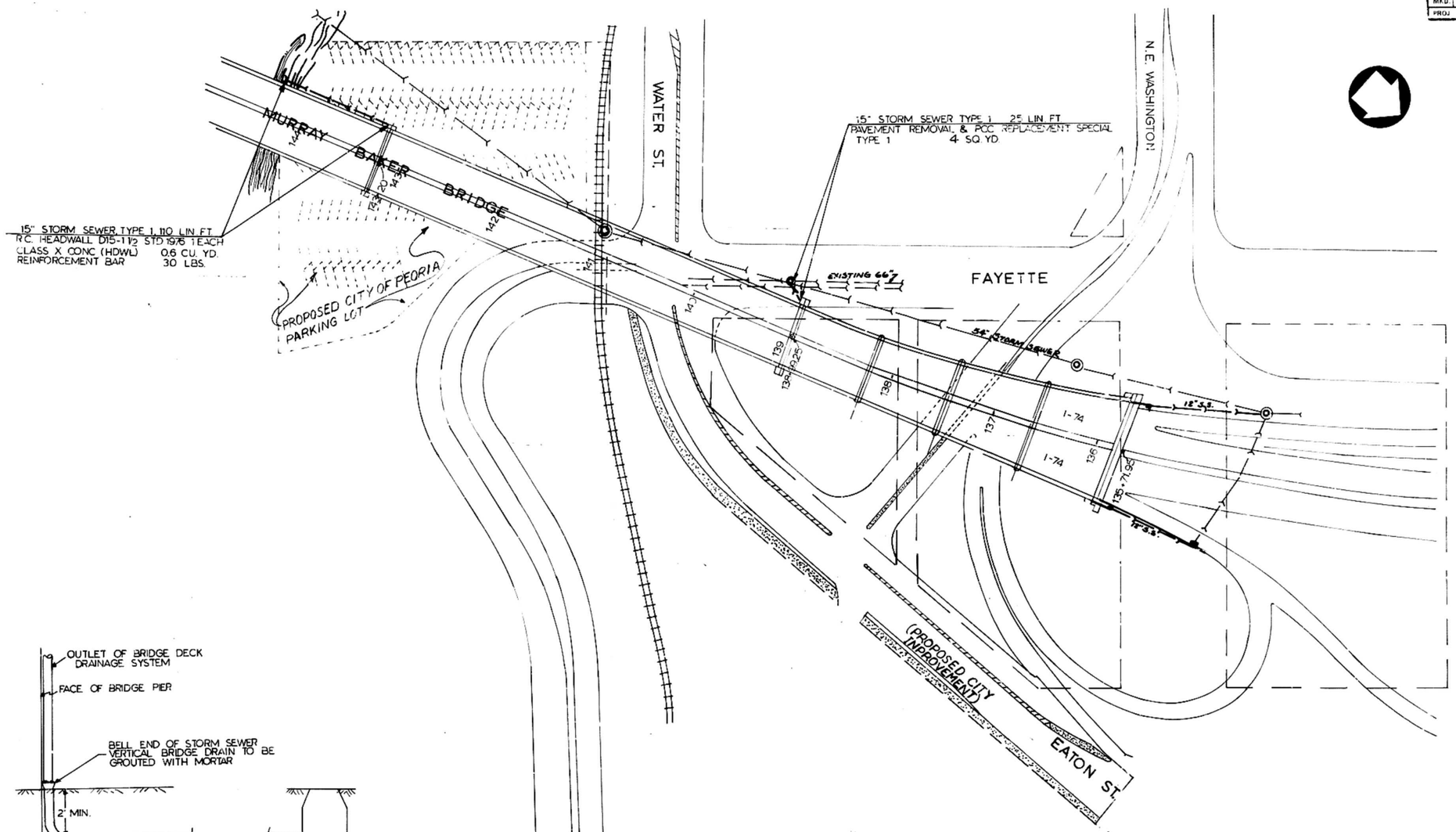


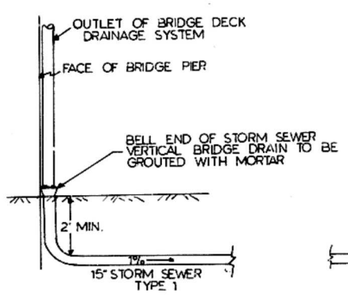


OUTLET FOR CLOSED BRIDGE DECK DRAINAGE SYSTEM

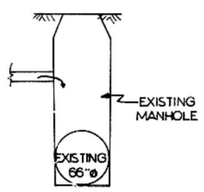


PIER AT STA. 138+99.25

15" STORM SEWER TYPE 1 INCLUDING THE ELBOW SHALL BE MEASURED ALONG THE ℄ AND TO BE PAID FOR PER LIN. FT. AT CONTRACT UNIT PRICE FOR STORM SEWER, TYPE 1, 15". THERE WILL BE NO ADDITIONAL COMPENSATION FOR THE WORK CONNECTING THE 15" SEWER TO THE MANHOLE.

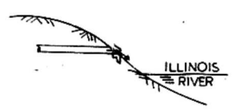


PIER AT STA. 143+00

Revised

| ROUTE | | SECTION | COUNTY | SHEET TOTAL | SHEET NO. |
|---|---|---|---|---|---|
| FAI | 74 | (72,90) | PEORIA TAZEWELL | 136 | 127 |
| MKD. | | 100-1 | | | |
| PROJ | | STA | TO STA | | |

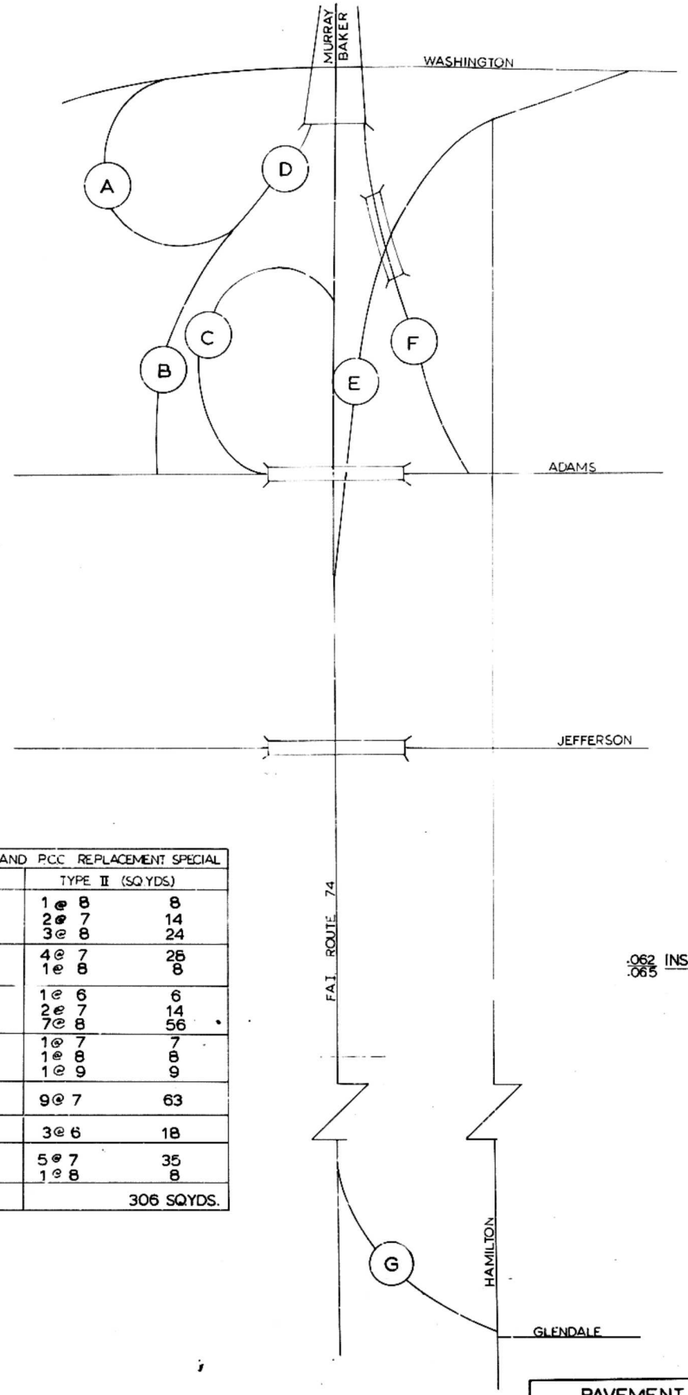


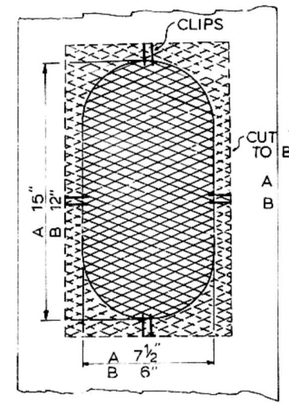


CUT ½" - #16 GAUGE EXPANDED METAL PLATES TO BE INSTALLED INSIDE OF CHORD

| | | | |
|---|---|---|---|
| A | 9½" x 17" | 1,080 | REQUIRED |
| B | 7½" x 14" | 270 | REQUIRED |

## PLAN - HANDHOLE SCREEN

CLIPS MUST ATTACH SECURELY TO STEEL PLATES

## CLEANING AND PAINTING STEEL BRIDGES

ESTIMATED WEIGHT OF STRUCTURAL STEEL

| | |
|---|---|
| NORTH APPROACH | 1,050,480 LBS |
| TRUSS SPANS | 9,800,000 LBS |
| SOUTH APPROACH | 5,071,680 LBS |
| ESTIMATED WEIGHT OF NEW STRUCTURAL STEEL | 1,000,000 LBS |

| LOCATION | PAVEMENT REMOVAL AND PCC REPLACEMENT SPECIAL | | | |
|---|---|---|---|---|
| | TYPE I (SQ YDS.) | | TYPE II (SQ YDS.) | |
| A | | | 1 @ 8<br>2 @ 7<br>3 @ 8 | 8<br>14<br>24 |
| B | 1 @ 4 | 4 | 4 @ 7<br>1 @ 8 | 28<br>8 |
| C | | | 1 @ 6<br>2 @ 7<br>7 @ 8 | 6<br>14<br>56 |
| D | 1 @ 2 | 2 | 1 @ 7<br>1 @ 8<br>1 @ 9 | 7<br>8<br>9 |
| E | | | 9 @ 7 | 63 |
| F | | | 3 @ 6 | 18 |
| G | | | 5 @ 7<br>1 @ 8 | 35<br>8 |
| TOTAL | 6 SQ. YDS. | | | 306 SQ YDS. |

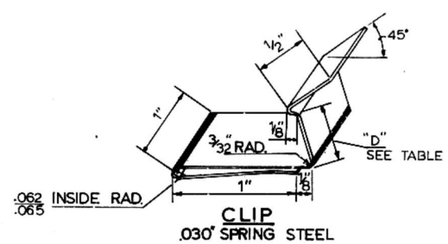


## CLIP

.030" SPRING STEEL

| "D" | NO. REQUIRED |
|---|---|
| 5/8" | 13,000 EACH |
| 3/4" | 2,250 EACH |
| TOTAL | 15,250 EACH |

NOTE: COST OF FURNISHING AND INSTALLATION OF THE HAND-HOLE SCREENS AND THE CLIPS SHALL BE INCLUDED IN THE CONTRACT UNIT PRICE PER LUMP SUM FOR CLEANING AND PAINTING STEEL BRIDGE. ALL EXCESS HAND-HOLE SCREENS AND CLIPS SHALL BE TURNED OVER TO DISTRICT MAINTENANCE. HAND HOLE SCREEN SHALL BE ELECTROGALVANIZED, AND IT SHALL CONFORM TO ASTM A153-65. THE CLIPS SHALL BE HEAT TREATED TO R/C 42-45, ELECTROGALVANIZED, AND BAKED AT 375° FOR 2 HOURS.

PAVEMENT PATCHING

Revised

| ROUTE | | SECTION | COUNTY | SHEET TOTAL | SHEET NO. |
|---|---|---|---|---|---|
| FAI | 74 | (72,90) | PEORIA | 136 | 128 |
| MKD. | | 100-1 | TAZEWELL | | |
| PROJ. | | STA. | TO STA. | | |

P.C. CONCRETE APPROACH SHOULDER PAVEMENT 4 SQ. YDS.
TYPE D INLET BOX STANDARD 2324 (SPEC.) 1 EACH
*STORM SEWER TYPE 1, 15" 85 LIN. FT.

*CONNECT TO EXISTING INLET

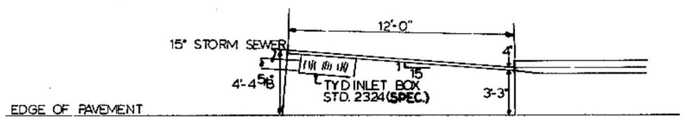


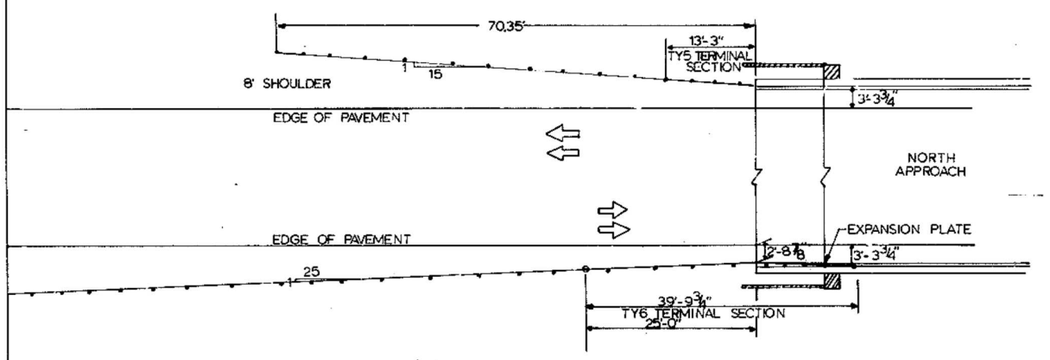


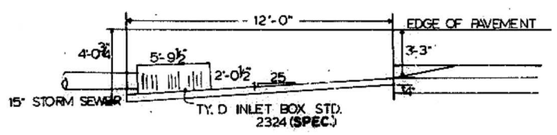


P.C. CONCRETE APPROACH SHOULDER PAVEMENT 4 SQ. YDS.
TYPE D INLET BOX STANDARD 2324 (SPECIAL) 1 EACH
* STORM SEWER TYPE 1, 15" 115 LIN. FT.
* CONNECT TO EXISTING MANHOLE

* INLET TO BE REMOVED 1 EACH
P.C. CONCRETE SHOULDER APPROACH PAVEMENT 12 SQ. YDS.
TYPE D INLET BOX STD. 2324 (SPEC.) 1 EACH
STORM SEWER TY.1 12" 2 LIN. FT.

* THIS INCLUDES THE WORK OF REMOVING NECESSARY PORTION OF STORM SEWER.

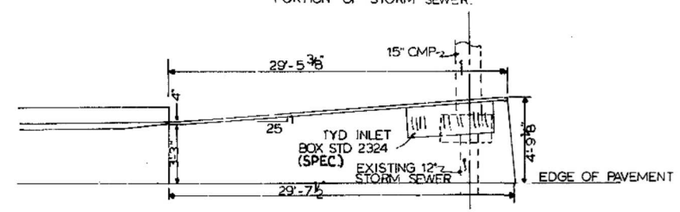


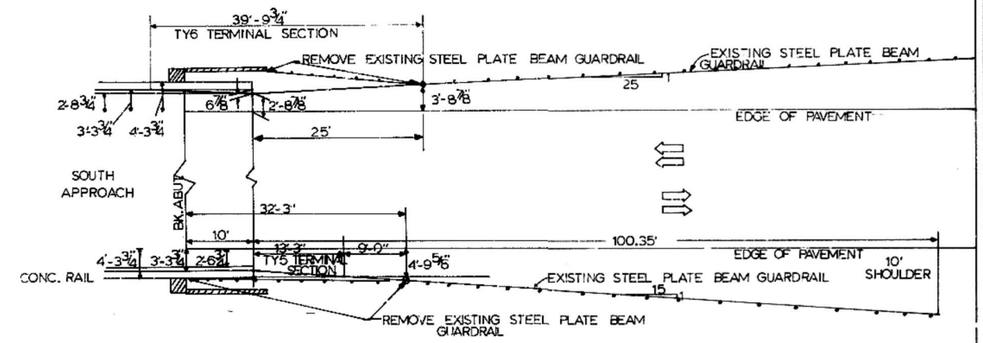


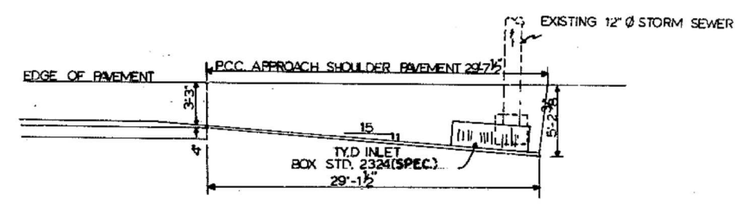


INLETS TO BE REMOVED 1 EACH
P.C. CONCRETE APPROACH SHOULDER PAVEMENT 13 SQ. YDS.
TYPE D INLET BOX STANDARD 2324 (SPECIAL) 1 EACH
STORM SEWER TYPE 1, 12" 2 LIN. FT.

| ROUTE | | SECTION | COUNTY | SHEET TOTAL | SHEET NO. |
|---|---|---|---|---|---|
| FAI | 74 | (72,90) 100-1 | PEORIA TAZEWELL | 136 | 129 |
| MKD. | | | | | |
| PROJ. | | STA. | TO STA. | | |

NOTES:

DRC FABRIC, ASTM A-526 GALVANIZED SHEET, COATING DESIGNATION G-165 (1.65 oz./sq. ft.)

FASTENERS A-325 UNLESS NOTED

ALL FASTENERS GALVANIZED PER ASTM A-153.

INSTALLATION PROCEDURE

1. DRILL HOLES FOR CONCRETE EXPANSION ANCHORS AND POSITION ANCHORS.
2. THREAD END POST THROUGH FABRIC AND INSTALL BRACING HARDWARE.
3. STRETCH FABRIC APPROX. 3% TO 5% AND INSTALL INTERMEDIATE POSTS.

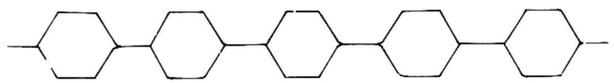

TOP VIEW OF DRC FABRIC

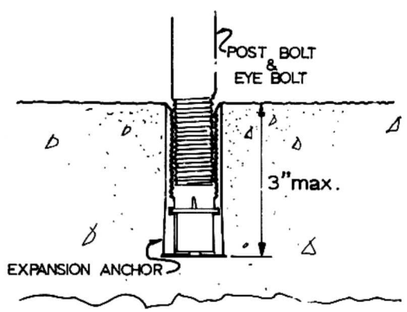


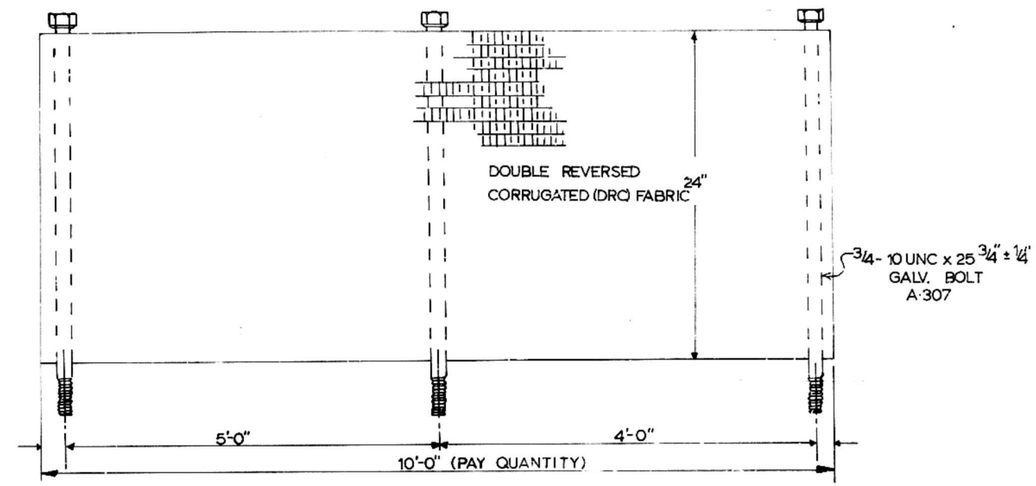


VISUAL SCREEN (TEMPORARY)

℄ MURRAY BAKER BRIDGE 3,240 LIN. FT.
(FOR DETOUR TREATMENT)

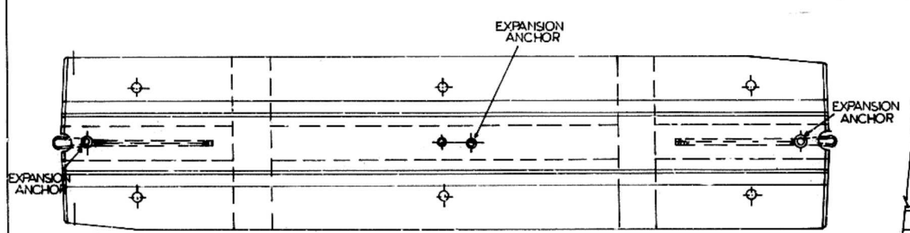


TOP VIEW

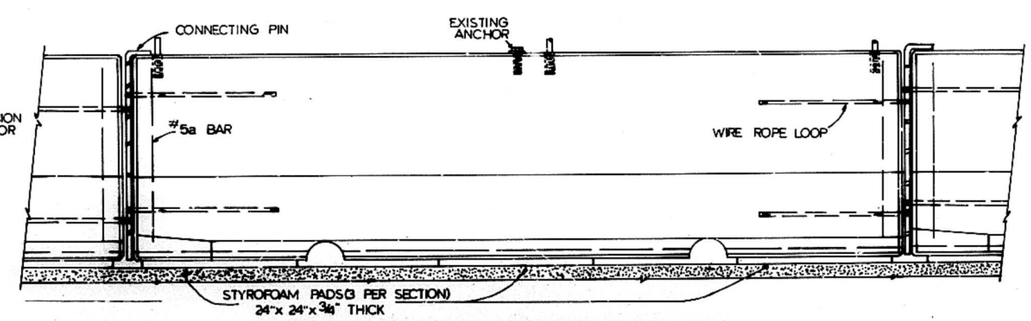


TYPICAL INSTALLATION WITH STYROFOAM PADS
TEMPORARY CONCRETE BARRIER

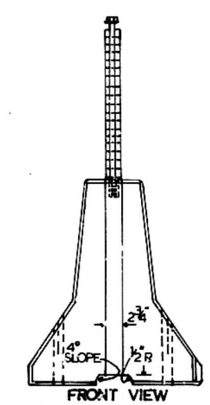


FRONT VIEW

DETAIL OF VISUAL SCREEN (TEMPORARY)

| ROUTE | SECTION | COUNTY | SHEET TOTAL |
|---|---|---|---|
| FAI 74 | (72,90) 100-1 | PEORIA | 136 130 |
| MKD | | TAZEWELL | |
| PROJ | STA | TO STA | |

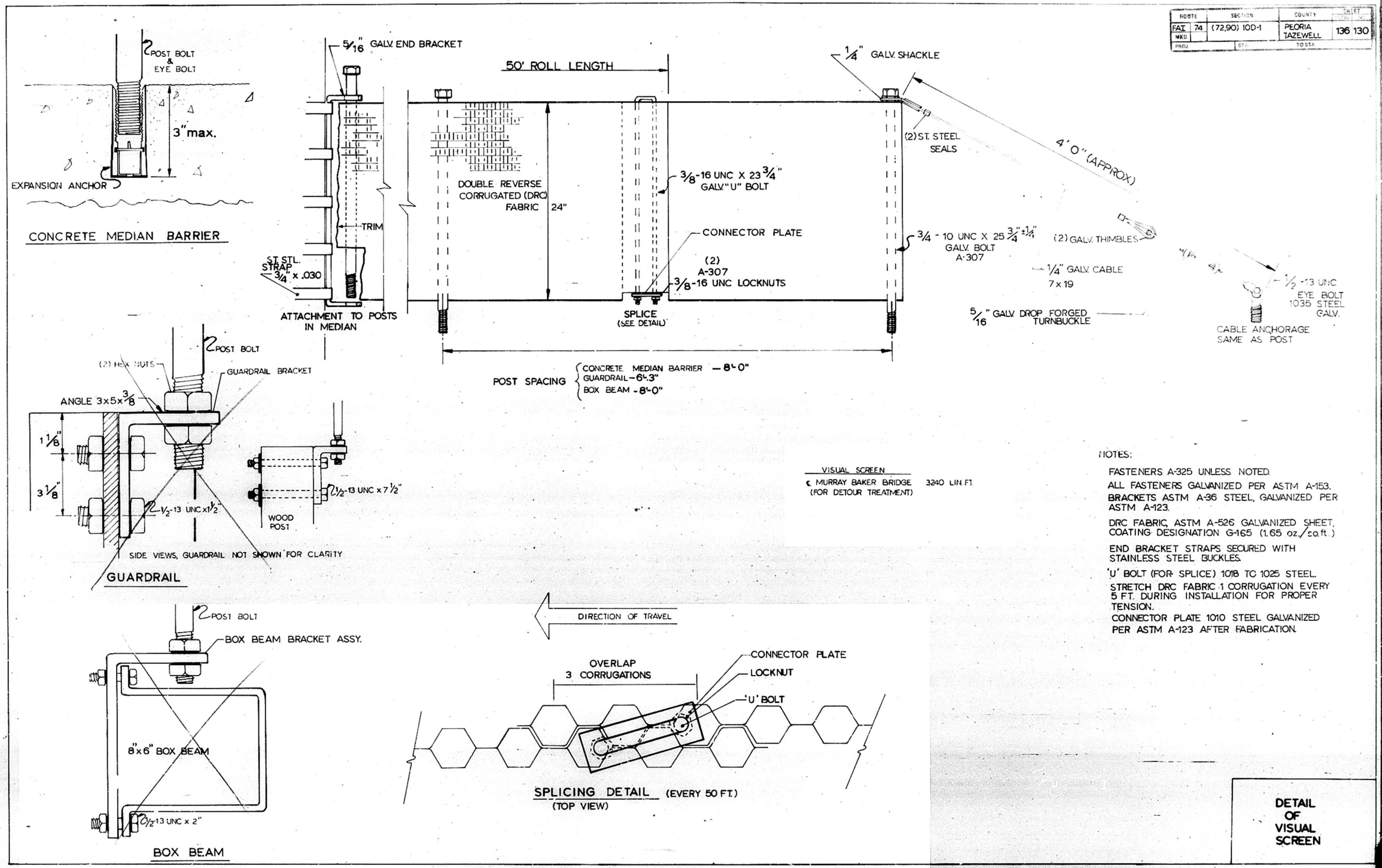


NOTES:

FASTENERS A-325 UNLESS NOTED.

ALL FASTENERS GALVANIZED PER ASTM A-153.

BRACKETS ASTM A-36 STEEL, GALVANIZED PER ASTM A-123.

DRC FABRIC, ASTM A-526 GALVANIZED SHEET, COATING DESIGNATION G-165 (1.65 oz./sq.ft.)

END BRACKET STRAPS SECURED WITH STAINLESS STEEL BUCKLES.

'U' BOLT (FOR SPLICE) 1018 TO 1025 STEEL.

STRETCH DRC FABRIC 1 CORRUGATION EVERY 5 FT. DURING INSTALLATION FOR PROPER TENSION.

CONNECTOR PLATE 1010 STEEL GALVANIZED PER ASTM A-123 AFTER FABRICATION.

**DETAIL OF VISUAL SCREEN**

| ROUTE | SECTION | COUNTY | sheet tot. | sheet no. |
|---|---|---|---|---|
| FAI 74 | (72,90) 100-1 | PEORIA TAZEWELL | 136 | 131 |
| proj | | | | |

Note: Tilt hook of #9 bars for min. 3½" cl. Use 1'-4" Min. Lap for #4 bars. Use 1'-8" Min. Lap for #5 bars

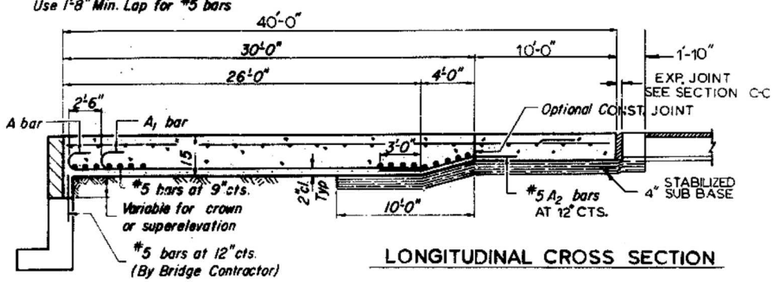


LONGITUDINAL CROSS SECTION

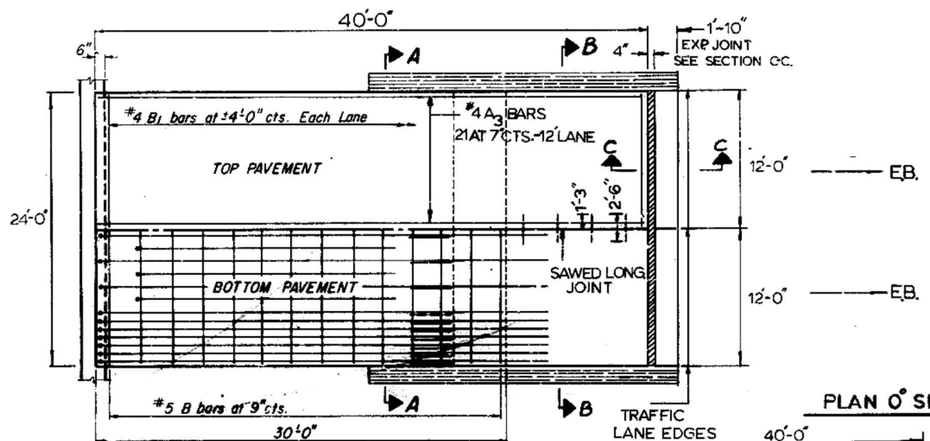


PLAN 0° SKEW (E.B.)

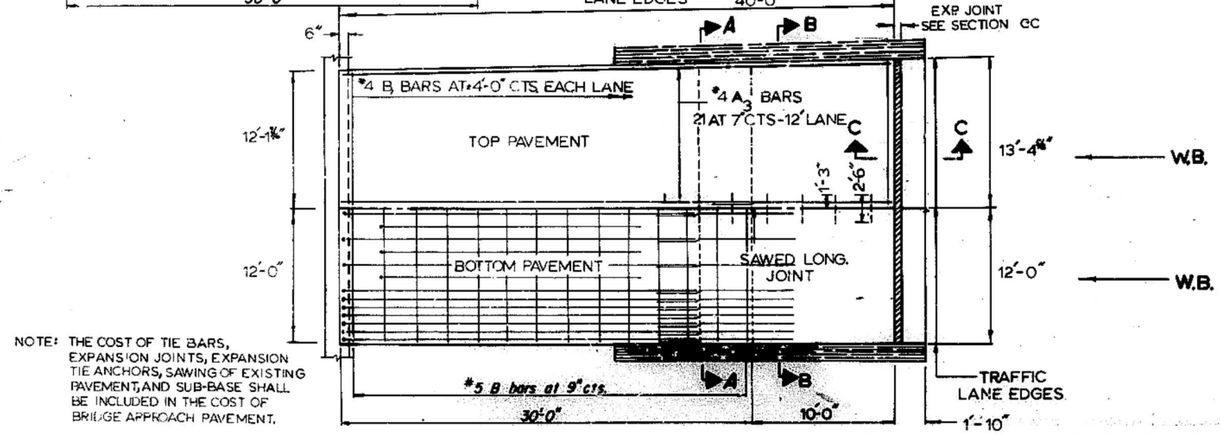


PLAN 0° SKEW (W.B.)

NOTE: THE COST OF TIE BARS, EXPANSION JOINTS, EXPANSION TIE ANCHORS, SAWING OF EXISTING PAVEMENT, AND SUB-BASE SHALL BE INCLUDED IN THE COST OF BRIDGE APPROACH PAVEMENT.

## BILL OF MATERIALS

| LOC. | BAR | NO | SIZE | LENGTH | SHAPE | BAR | NO | SIZE | LENGTH | SHAPE |
|---|---|---|---|---|---|---|---|---|---|---|
| | EAST BOUND | | | | | WEST BOUND | | | | |
| TOP REINFORCEMENT | $B_1$ | 24 | 4 | 11'-6" | — | $B_1$ | 24 | 4 | 11'-6" | — |
| | $A_3$ | 42 | 4 | 39'-6" | — | $A_3$ | 42 | 4 | 39'-6" | — |
| | $A_5$ | 42 | 4 | 1'-0" | — | $A_5$ | 42 | 4 | 1'-0" | — |
| | | | | | | | | | | |
| BOTTOM REINFORCEMENT | B | 40 | 5 | 23'-6" | — | B | 40 | 5 | 23'-6" | — |
| | A | 32 | 9 | 27'-0" | ⌒ | A | 32 | 9 | 27'-0" | ⌒ |
| | $A_1$ | 19 | 9 | 20'-3" | ⌒ | $A_1$ | 20 | 9 | 20'-3" | ⌒ |
| | $A_2$ | 32 | 5 | 10'-0" | ⌒ | $A_2$ | 32 | 5 | 10'-0" | ⌒ |
| | EAST BOUND REINFORCEMENT BARS = 6881 LBS | | | | | WEST BOUND REINFORCEMENT BARS = 6949 LBS | | | | |
| | EAST BOUND BRIDGE APPROACH PAVE'T = 112 yds³ | | | | | WEST BOUND BRIDGE APPROACH PAVE'T = 115 yds³ | | | | |

**GRAND TOTAL**

REINFORCEMENT = 13830 LBS
BRIDGE APPROACH PAV'T = 227 yds³

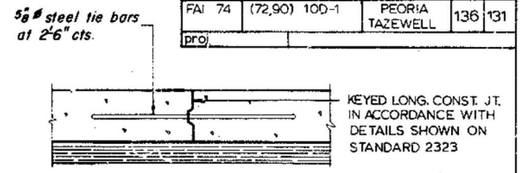


## OPTIONAL LONG. CONST. JOINT

*As approved by the Engineer, the contractor may elect to reduce the widths by use of the Optional Longitudinal Construction Joint shown. Joint shall be located at the edge of Traffic Lane*

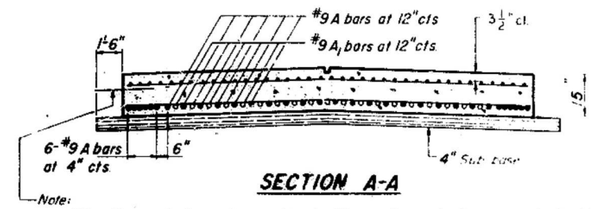


## SECTION A-A

Note:
*When the road plans show curb and gutter, gutter or bridge approach shoulder pavement adjacent to approach slabs, place ½" ø steel tie bars at 2'-6" centers in accordance with the details for Bulkhead Longitudinal Construction Joint shown on Standard 2323. Cost of the tie bars will be included in the contract unit price for the adjacent item.*

*Transitions for curb and gutter shall be as shown on the plans.*

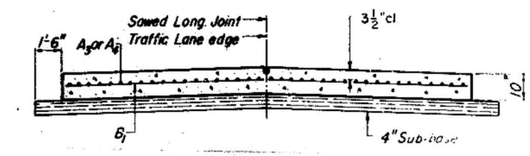


## SECTION B-B

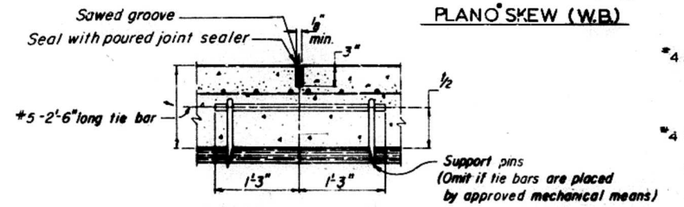


## SAWED LONG. JOINT

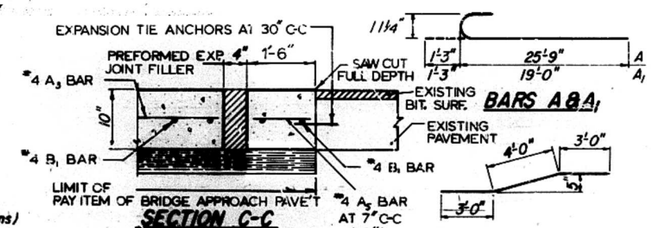


## SECTION C-C

*Reinforced Jointed P.C.C. Pavement*




## BARS A & $A_1$

## BAR $A_2$

Illinois Department of Transportation

PASSED May 20, 1981
Engineer of Bridge and Traffic Structures

APPROVED May 20, 1981
Engineer of Design

ISSUED 10-23-96

# BRIDGE APPROACH PAVEMENT

| ROUTE | SECTION | COUNTY | SHEET TOTAL | SHEET NO. |
|---|---|---|---|---|
| FAI 74 | (72,90) | PEORIA | 136 | 132 |
| MKD. | 100-1 | TAZEWELL | | |
| PROJ. | STA. | TO STA. | | |

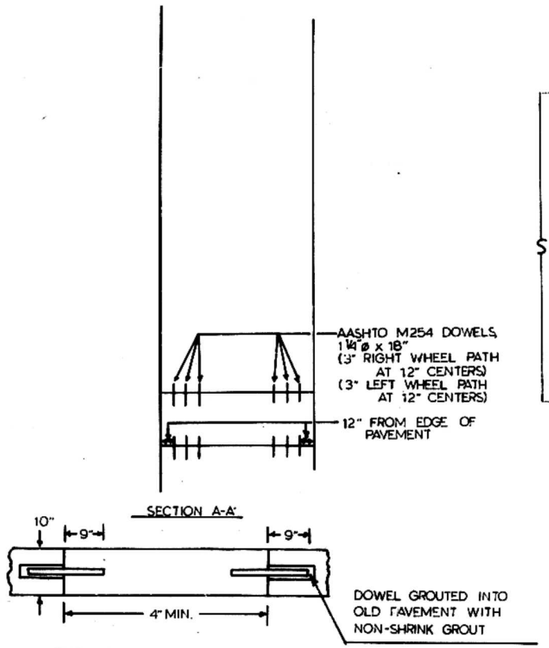


DETAIL OF DOWEL BAR PLACEMENT IN P.C.C. PATCHES

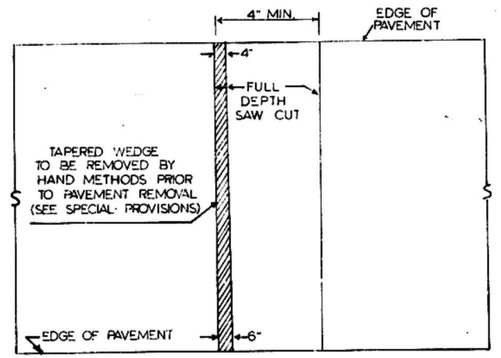


DETAIL OF FULL DEPTH SAW CUTS

PATCHING DETAILS

TRAFFIC CHANNELIZING POST

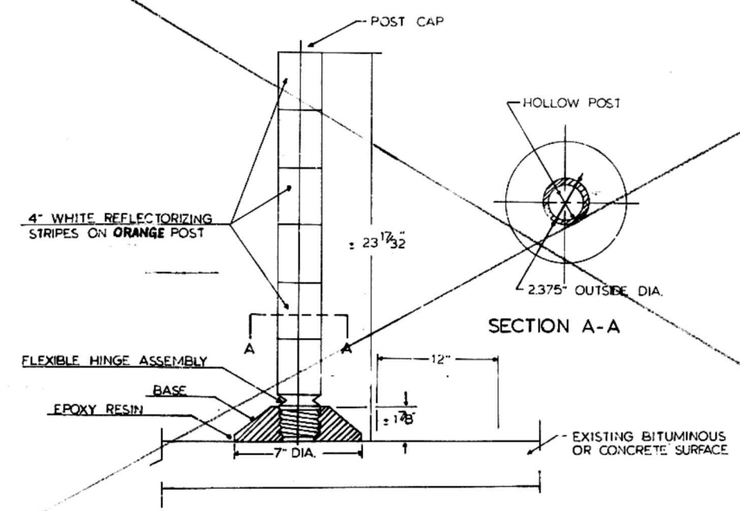


DETAIL OF TRAFFIC CHANNELIZING POST

NOT TO SCALE

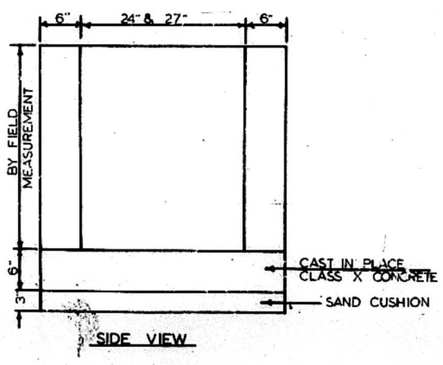


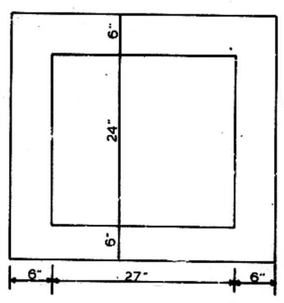


NOTE: 1. SEE STANDARD 2385-FOR FRAME AND GRATE, TYPE 20

2. CLASS X CONCRETE TO BE USED THROUGHOUT.

3. CONTRACTOR SHALL FIELD MEASURE TO DETERMINE THE CORRECT HEIGHT OF THE INLET TO ACCOMMODATE THE EXISTING PIPE.

INLET SPECIAL WITH TYPE 20 FRAME AND GRATE

TYPICAL CURB INSTALLATION ON EXISTING PAVEMENT

1-6 FOR CONCRETE CURB TY. B-1 MOD.
2-9 " " " " "-2 "

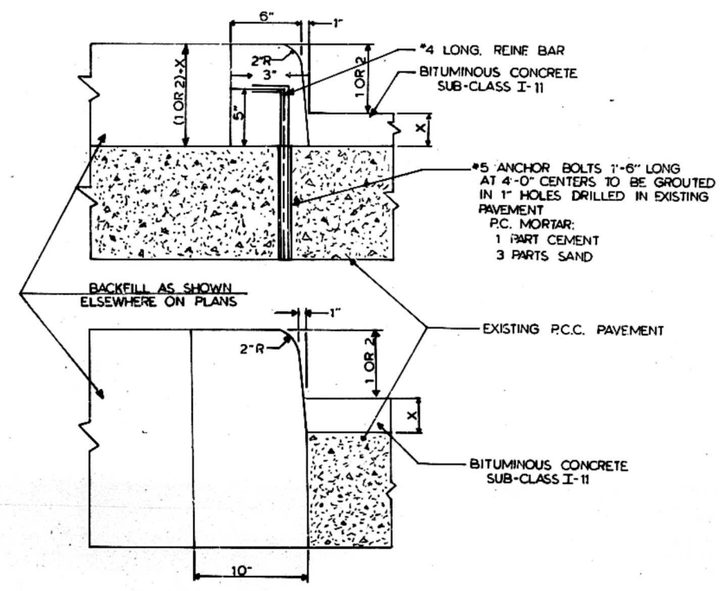


TYPICAL CURB INSTALLATION AT EDGE OF EXISTING PAVEMENT

GENERAL NOTES:

DRAINS 1 SQ. FT. IN AREA SHALL BE CUT THROUGH EXISTING CONCRETE WITHIN MEDIAN ALONG CURB AT 20' CENTERS AND AT LOW POINTS.

CONCRETE CURB, TYPE-B MODIFIED SHALL BE CONSTRUCTED SIMILAR TO STANDARD 2130 AND IN ACCORDANCE WITH SECTION 80 OF THE STANDARD SPECIFICATIONS EXCEPT AS NOTED HEREIN.

THE CONTRACT UNIT PRICE PER LINEAL FOOT FOR CONCRETE CURB, TYPE B MODIFIED SHALL INCLUDE ALL ANCHOR BARS, DOWELS, LONGITUDINAL REINFORCING, AND CONTRACTION JOINTS WHEN REQUIRED.

MINIMUM STEEL CLEARANCE - 1-1/2" THROUGHOUT.

TYPICAL SECTIONS
CONCRETE CURB
TYPE B MODIFIED

Rev. 1-31-83

| FEDERAL AID ROUTE NO. | SEC. | COUNTY | TOTAL SHEETS | SHEET NO. |
|---|---|---|---|---|
| FAI 74 | (72,90) 10D-1 | PEORIA TAZEWELL | 136 | 133 |
| FED. ROAD DIV. NO. 4 | ILLINOIS | PROJECT | | |

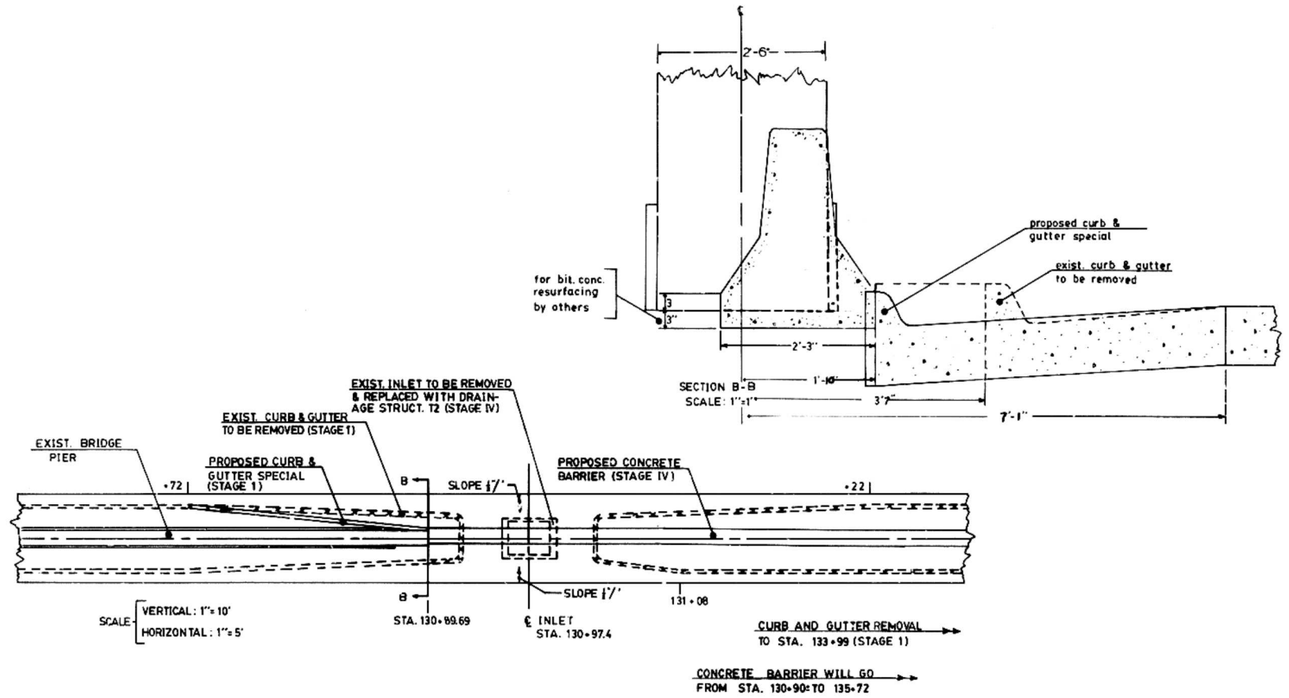


## CURB AND GUTTER DETAILS

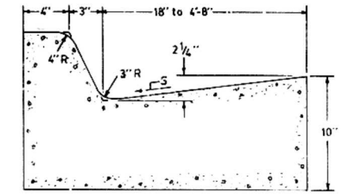


S = SLOPE VARIES. MATCH EXISTING SLOPE AT STA. 130+72 AND MATCH THE F AT STA. 130+97±

COMB. CONC. CURB & GUTTER SPECIAL
SCALE: 1"=1/2'

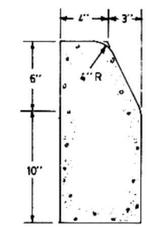


CONCRETE CURB TY. M
SCALE: 1"=1/2'

## DETAIL OF P.C.C. BASE COURSE WIDENING

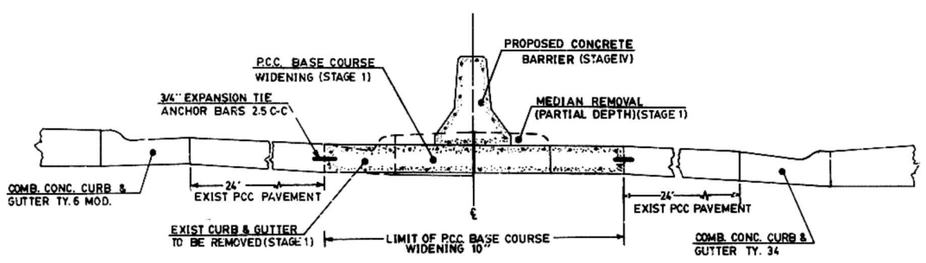


SECTION A-A
SCALE: 1"=2'

## BUTT JOINT DETAILS

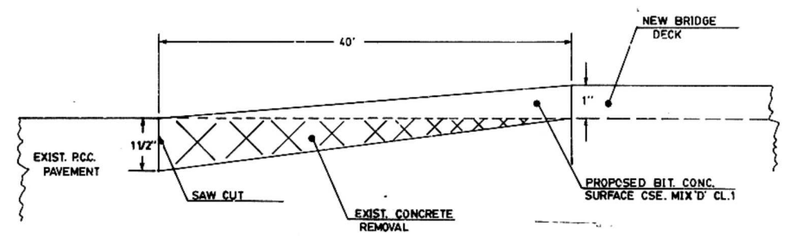


EASTBOUND LANE (WEST APPROACH)

## BITUMINOUS TAPER DETAILS

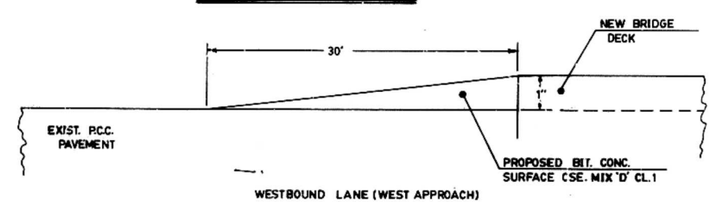


WESTBOUND LANE (WEST APPROACH)

SPECIAL DETAILS
FAI ROUTE 74
SECTION (72,90) 10D-1
PEORIA COUNTY

SCALE: AS NOTED

| ROUTE | SECTION | COUNTY | SHEET TOTAL | SHEET NO. |
|---|---|---|---|---|
| FAI 74 | (72,90) 10D-1 | PEORIA TAZEWELL | 136 | 134 |
| MKD. | | | | |
| PROJ. | STA. | TO STA. | | |

# BASIC APPLICATION OF TRAFFIC CONTROL DEVICES FOR CONSTRUCTION, MAINTENANCE AND UTILITY OPERATIONS

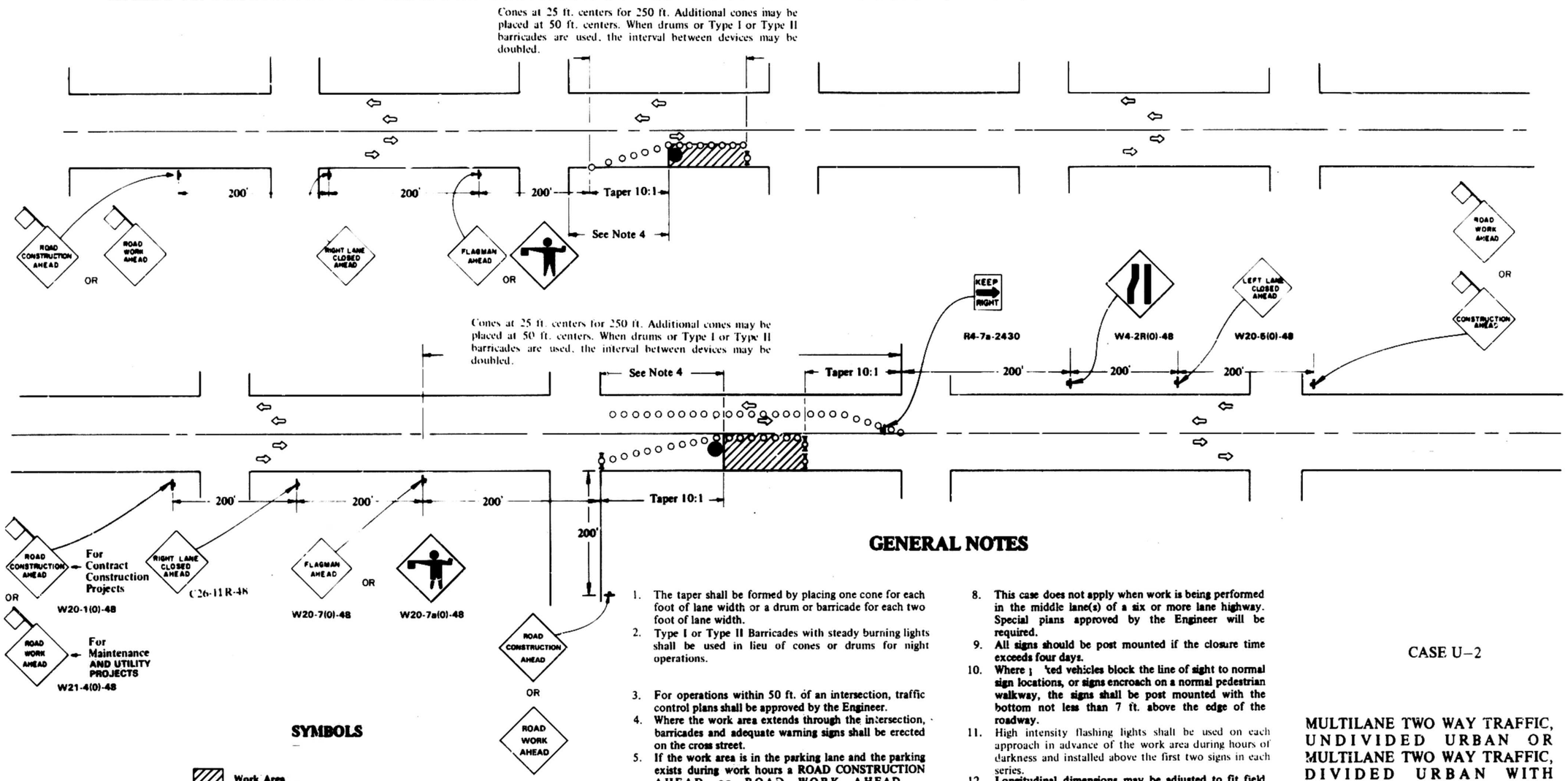


## SYMBOLS

Work Area.

Sign with 18 in. by 18 in. (minimum) orange flag attached.

Cone, Drum (55 or 30 gallon), Type I or Type II Barricade.

Sign on portable or permanent support.

Flagman with Traffic Control sign.

Type I or Type II Barricade with flashing light

## GENERAL NOTES

1. The taper shall be formed by placing one cone for each foot of lane width or a drum or barricade for each two foot of lane width.
2. Type I or Type II Barricades with steady burning lights shall be used in lieu of cones or drums for night operations.
3. For operations within 50 ft. of an intersection, traffic control plans shall be approved by the Engineer.
4. Where the work area extends through the intersection, barricades and adequate warning signs shall be erected on the cross street.
5. If the work area is in the parking lane and the parking exists during work hours a ROAD CONSTRUCTION AHEAD or ROAD WORK AHEAD sign shall be installed 200 ft. in advance of the work area and the area protected with cones or barricades.
6. When there is no work being performed, the FLAGMAN AHEAD sign(s) and the flagman will not be required. A ONE LANE ROAD AHEAD sign(s) shall be installed in place of the FLAGMAN AHEAD sign(s).
7. If the work operation is performed between 9:00 a.m. and 3:00 p.m. and does not exceed 15 minutes, traffic protection shall be as shown for Std. 2307. Signs, when required, shall be installed at 200 ft. spacing.
8. This case does not apply when work is being performed in the middle lane(s) of a six or more lane highway. Special plans approved by the Engineer will be required.
9. All signs should be post mounted if the closure time exceeds four days.
10. Where parked vehicles block the line of sight to normal sign locations, or signs encroach on a normal pedestrian walkway, the signs shall be post mounted with the bottom not less than 7 ft. above the edge of the roadway.
11. High intensity flashing lights shall be used on each approach in advance of the work area during hours of darkness and installed above the first two signs in each series.
12. Longitudinal dimensions may be adjusted to fit field conditions. The lateral placement of the flagmen may be varied from that shown.
13. All warning signs shall have black legend and border on an orange reflectorized background. When the posted speed limit is 35 or 40 M.P.H. all warning signs shall have minimum dimensions of 48 in. by 48 in., or with the approval of the Engineer 36 in. by 36 in. If the posted speed limit is 30 M.P. H. or less all warning signs shall have minimum dimensions of 36 in. by 36 in. All signs other than warning signs shall have as a minimum the dimensions shown and shall have a black legend and border on a white reflectorized background.
14. All vehicles, equipment, men and their activities are restricted at all times to one side of the pavement unless otherwise authorized by the Engineer.
15. Form BT 725 is required.

CASE U–2

MULTILANE TWO WAY TRAFFIC, UNDIVIDED URBAN OR MULTILANE TWO WAY TRAFFIC, DIVIDED URBAN WITH MOUNTABLE MEDIAN, DAY OR NIGHT OPERATION

Where, at any time, any vehicle, equipment, men or their activities encroach on the pavement requiring the closure of at least one traffic lane in an area where the posted speed limit is 40 M.P.H. or less.

Revised 5-81

| ROUTE | SECT. | COUNTY | TOTAL | NO. |
|---|---|---|---|---|
| FAI 74 | (7290) 10D1 | PEORIA TAZEWELL | 136 | 135 |

# BASIC APPLICATION OF TRAFFIC CONTROL DEVICES FOR CONSTRUCTION, MAINTENANCE AND UTILITY OPERATIONS

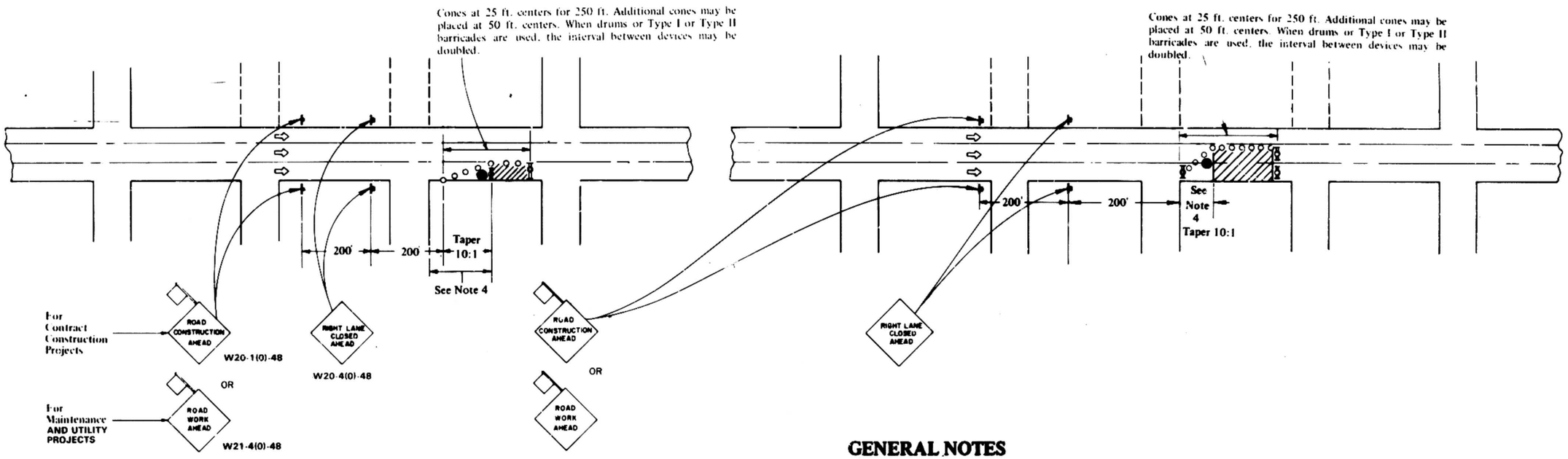


## SYMBOLS

- Work Area.
- Sign with 18 in. by 18 in. (minimum) orange flag attached.
- Cone, Drum (55 or 30 gallon), Type I or Type II Barricade.
- Sign on portable or permanent support.
- Flagman with Traffic Control sign.
- Type I or Type II Barricade with flashing light.

## GENERAL NOTES

1. The taper shall be formed by placing one cone for each foot of lane width or a drum or barricade for each two foot of lane width.
2. **Type I or Type II Barricades with steady burning lights shall be used in lieu of cones or drums for night operations.**
3. For operations within 50 ft. of an intersection, traffic control plans shall be approved by the Engineer.
4. Where the work area extends through the intersection, barricades and adequate warning signs shall be erected on the cross street.
5. If the work area is in the parking lane and the parking exists during work hours a ROAD CONSTRUCTION AHEAD or ROAD WORK AHEAD sign shall be installed 200 ft. in advance of the work area and the area protected with cones or barricades.
6. If the work operation is performed between 9:00 a.m. and 3:00 p.m. and does not exceed 15 minutes, traffic protection shall be as shown for **Std. 2307**. Signs, when required, shall be installed at 200 ft. spacing.
7. This case also applies when work is being performed in the extreme left lane or lanes. Under these conditions LEFT LANE CLOSED signs shall be substituted for the RIGHT LANE CLOSED signs.
8. This case does not apply when work is being performed in the middle lane(s) of a six or more lane highway. Special plans approved by the Engineer will be required.
9. All signs should be post mounted if the closure time exceeds four days.
10. Where parked vehicles block the line of sight to normal sign locations, or signs encroach on a normal pedestrian walkway, the signs shall be post mounted with the bottom not less than 7 ft. above the edge of the roadway.
11. High intensity flashing lights shall be used on each approach in advance of the work area during hours of darkness and installed above the first two signs in each series.
12. Longitudinal dimensions may be adjusted to fit field conditions. The lateral placement of the flagmen may be varied from that shown.
13. All warning signs shall have black legend and border on an orange reflectorized background. When the posted speed limit is 35 or 40 M.P.H. all warning signs shall have minimum dimensions of 48 in. by 48 in., or with the approval of the Engineer 36 in. by 36 in. If the posted speed limit is 30 M.P.H. or less all warning signs shall have minimum dimensions of 36 in. by 36 in.
14. All vehicles, equipment, men and their activities are restricted at all times to one side of the pavement unless otherwise authorized by the Engineer.
15. Form BI 725 is required.

**CASE U–3**

**MULTILANE, TWO WAY TRAFFIC, WITH NON TRAVERSABLE MEDIAN, OR MULTILANE, ONE WAY TRAFFIC, URBAN, DAY OR NIGHT OPERATIONS**

**Where, at any time, any vehicle, equipment, men or their activities encroach on the pavement requiring the closure of one or more traffic lanes in an area where the posted speed limit is 40 M.P.H. or less.**

| ROUTE | SECTION | | SHEET | |
|---|---|---|---|---|
| FAI 74 | (72,90) | PEORIA TAZEWELL | 136 | 136 |
| MKD | 10D-1 | | | |

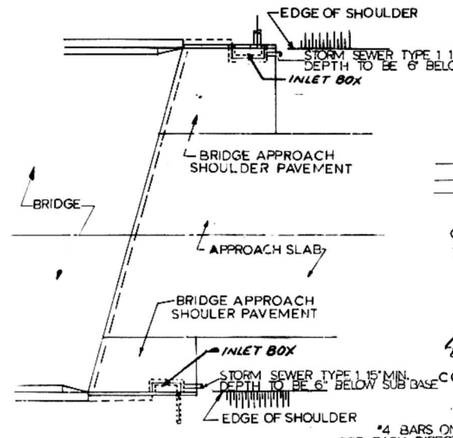


GENERAL PLAN


SEC. D-D
WHEN WINGWALL IS PRESENT

SEC. D-D
WHEN WINGWALL IS NOT PRESENT

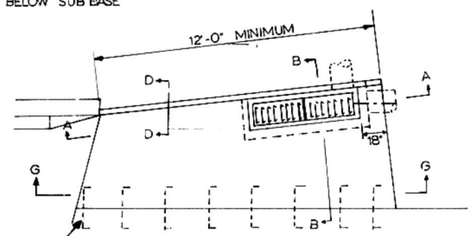


TYPICAL DETAIL PLAN

$\frac{5}{8}$" ø STEEL TIE BARS 2'-6" CTS. SHALL IN ACCORDANCE DETAILS FOR BULKHEADS CONSTRUCTION JOINT SHOWN ON STANDARD 2323

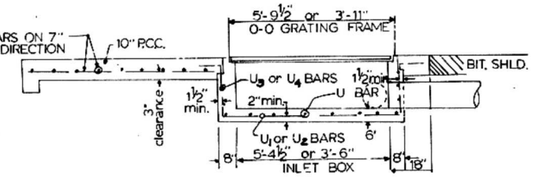


SECTION A-A

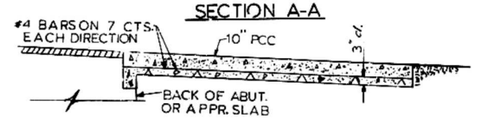


SEC. G - G

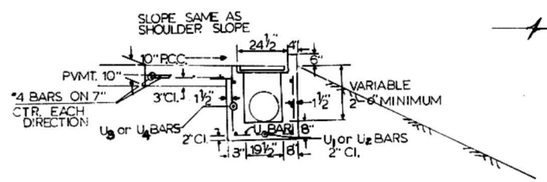


SECTION B-B

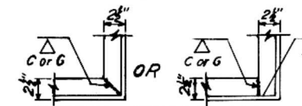


TYPICAL CORNER OF STEEL GRATING FRAME

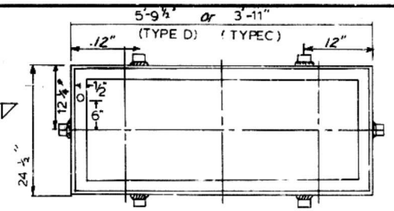


DETAIL OF STEEL FRAME

CAST FRAME TO HAVE SOME BASIC

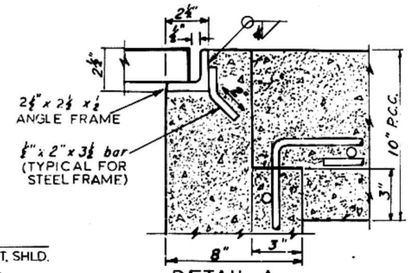


DETAIL A

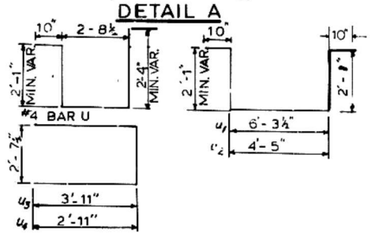


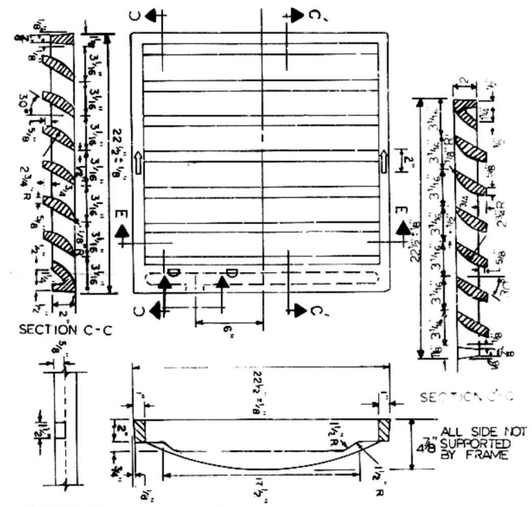


*Material Required for One Type D Inlet Box*

| Bar | No. | Size |
|---|---|---|
| u | 8 | #4 |
| $u_4$ | 3 | #4 |
| $u_1$ | 4 | #4 |

*Material Required for One Type C Inlet Box*

| Bar | No. | Size |
|---|---|---|
| u | 6 | #4 |
| $u_2$ | 3 | #4 |
| $u_4$ | 4 | #4 |

DETAIL OF GRATING (SEC STD 2385)
TYPE C REQUIRE 2 GRATES
TYPE D REQUIRE 3 GRATES

GENERAL NOTES

SEE BRIDGE APPROACH SHOULDER PAVEMENT DETAIL.

FOR PLACEMENT OF DRAINAGE ELEMENTS ON EXISTING CONSTRUCTION WITH EXISTING RIGID APPROACH PAVEMENT, SUBSTITUTE EXPANSION ANCHOR BOLTS FOR TIE BARS. FOR NON-RIGID APPROACHES, SHOULDER PAVEMENT WILL BE AS SHOWN EXCEPT OMIT TIE BARS.

TRENCH BACKFILL IS TO BE INCLUDED IN THE UNIT PRICE FOR STORM SEWER, TYPE 1, 15". THE P.C. CONCRETE USED IN THE SHOULDER SLAB SHALL MEET THE REQUIREMENTS OF SECTION 408 OF THE STANDARD SPECIFICATIONS.

THE LENGTHS OF #4 BARS USED IN THE APPROACH SHOULDER PAVEMENT SHALL BE AS REQUIRED TO ACCOMMODATE THE LENGTH, WIDTH AND SKEW OF THE SLAB.

CLASS X CONCRETE OR PRE-CAST CONCRETE SHALL BE USED THROUGHOUT.

PRECAST CONCRETE SHALL BE IN ACCORDANCE WITH SECTIONS 505.01 THRU 505.05 OF THE STANDARD SPECIFICATIONS EXCEPT THAT THE CONCRETE STRENGTH SHALL BE 4000 P.S.I. AFTER 28 DAYS.

EXPOSED EDGES SHALL BE BEVELED 3/4".

SHOP DRAWINGS WILL NOT BE REQUIRED FOR THESE INLET BOXES.

A 3" DEEP SAND BEDDING, CONFORMING TO ARTICLE 703.01 (FA 1 OR FA 2) SHALL BE PROVIDED UNDER FULL LENGTH AND WIDTH OF THE PRECAST UNITS, AND ALL VOIDS AROUND THE PIPE DRAIN ENTRANCE, BOTH INSIDE AND OUTSIDE, SHALL BE SEALED WITH MORTAR.

THE GRATES SHALL BE MADE OF GRAY IRON CONFORMING TO STANDARD SPECIFICATIONS.

THE NOTCH IN THE GRATE AND THE 9/16" ø HOLES IN THE FRAME ARE FOR THE FIELD INSERTION OF ONE GALVANIZED 1/2" ø BOLT AND NUT. THE BOLT AND NUT SHALL BE PLACED, AS DIRECTED BY THE ENGINEER, TO PROVIDE FOR CORRECT REPLACEMENT OF THE GRATE DURING MAINTENANCE OPERATIONS.

THE GRATING SHALL SEAT FIRMLY IN THE FRAME BUT SHALL NOT BE SECURED TO THE FRAME.

STEEL FRAMES SHALL CONFORM TO ARTICLE 710.04 OF THE STANDARD SPECIFICATIONS AND SHALL BE GALVANIZED TO AASHTO SPECIFICATION M 111 AFTER FABRICATION.

BRIDGE APPROACH SHOULDER PAVEMENT WILL BE MEASURED IN PLACE AND PAID FOR IN SQUARE YARDS AS P.C. CONCRETE BRIDGE APPROACH SHOULDER PAVEMENT, WHICH SHALL INCLUDE THE COST OF SUBGRADE PREPARATION, TIE BARS, REINFORCEMENT AND JOINT FILLERS. IN COMPUTING THE AREA FOR PAYMENT, A DEDUCTION WILL BE MADE FOR THE AREA DISPLACED BY THE INLET.

THE CONTRACT UNIT PRICE "EACH" FOR TYPE D INLET BOX, (STD. 2324) SPECIAL OR TYPE C INLET BOX, (STD. 2324) SPECIAL, IN PLACE, SHALL INCLUDE THE FRAMES AND GRATING, CLASS X OR PRE-CAST CONCRETE, REINFORCEMENT BARS, EXCAVATION, BEDDING WHEN REQUIRED, AND COMPACTED BACKFILLING.

PORTLAND CEMENT CONCRETE BRIDGE APPROACH SHOULDER PAVEMENT

TYPE C & TYPE D INLET BOX (STANDARD 2324) SPECIAL

Revised

PRINCIPAL ITEMS: CONCRETE THRUST BLOCK EACH; PIPE DRAIN 15" C.F.; METAL END SECTION 15" EACH; TYPE D INLET BOX (STD 2324) SPECIAL or TYPE C INLET BOX (STD 2324) SPECIAL } EACH

REV 9-14-82 S.L.