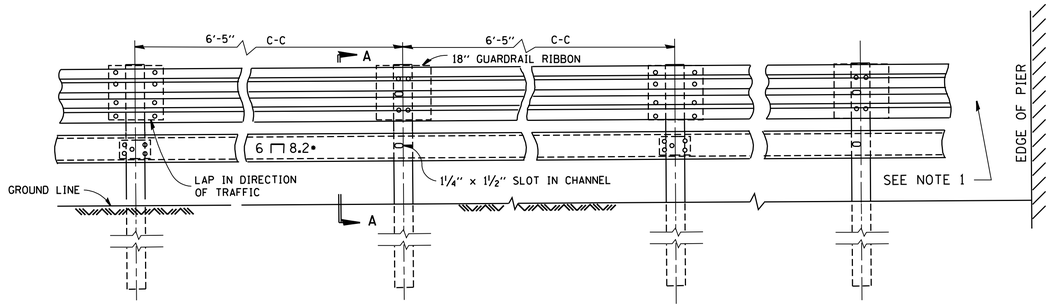

ELEVATION

DETAIL OF END SECTION

NOTE 1:
FOR DETAILS OF GUARDRAIL END ANCHORAGE AT PIERS, SEE SHEET NO. ___

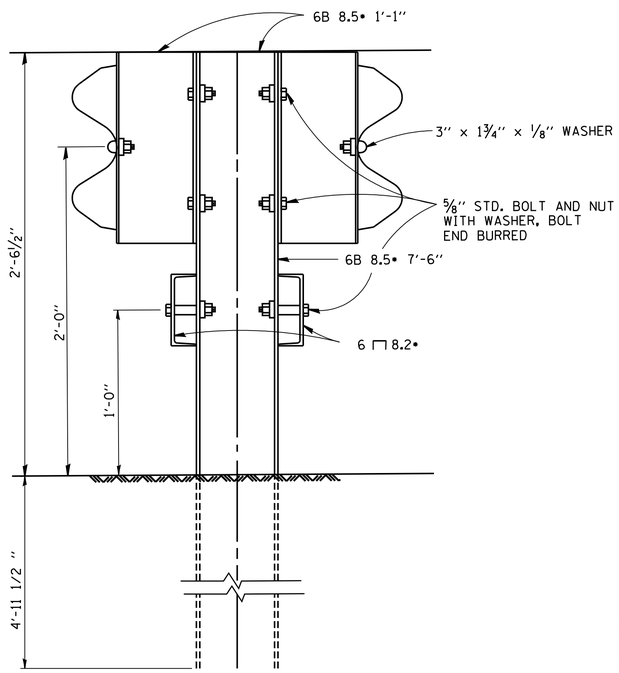

SECTION A-A

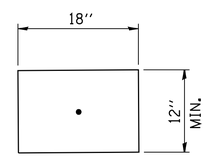

18" GUARDRAIL ELEMENT SPLICE

NOTE:
FOR DETAIL OF RAIL ELEMENT, RAIL SPLICING, BOLT, AND NUT, SEE STATE STANDARD 2230.
A 1⅜" x 3" x ⅛" STEEL PLATE WASHER AS SHOWN ON THIS DRAWING SHALL BE PLACED BETWEEN THE BOLT HEAD AND THE GUARDRAIL RIBBON AT ALL MOUNTING POINTS.
AN 18" PIECE OF GUARDRAIL RIBBON SHALL BE INSERTED BETWEEN THE CONTINUOUS RIBBON AND THE POST AT NON-SLICE MOUNTING POINTS.
RAIL, CHANNELS, POSTS, BASE PLATES, FASTENINGS, AND ALL OTHER EXPOSED ACCESSORIES SHALL BE GALVANIZED.

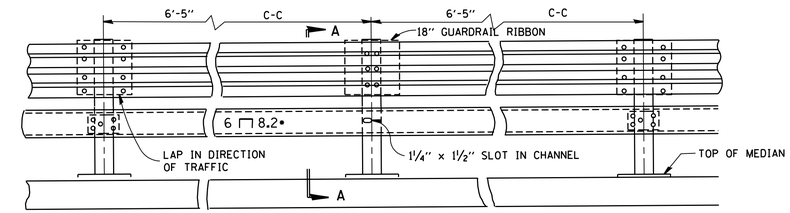

ELEVATION

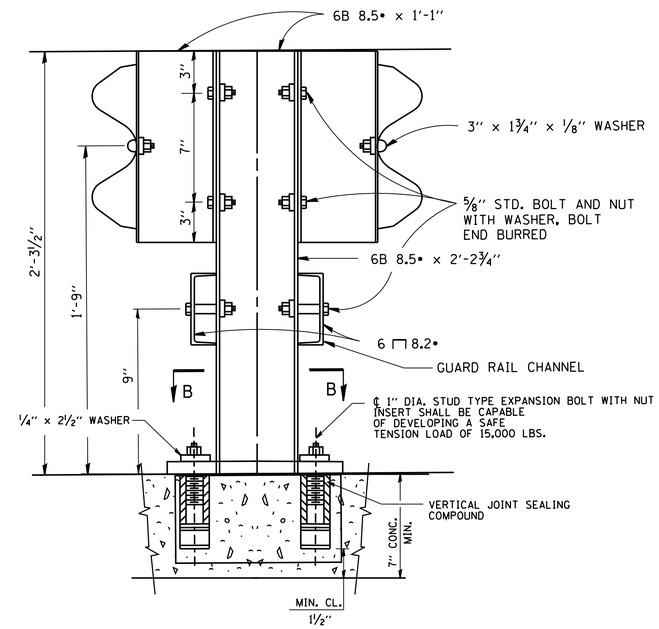

SECTION A-A
ANCHORAGE DETAIL

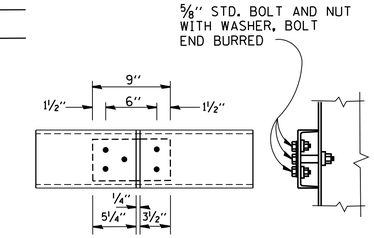

CHANNEL SPLICE
PLATE 8¾" x 4½" x ¼"

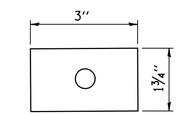

WASHER
PLATE 3" x 1¾" x ⅛"

NOTE:
ALL WELDS SHALL BE GROUND SMOOTH. POSTS SHALL BE CUT AND WELDED TO THE BASE PLATE SO THAT THE POSTS WILL BE PLUMB WHEN ERECTED.

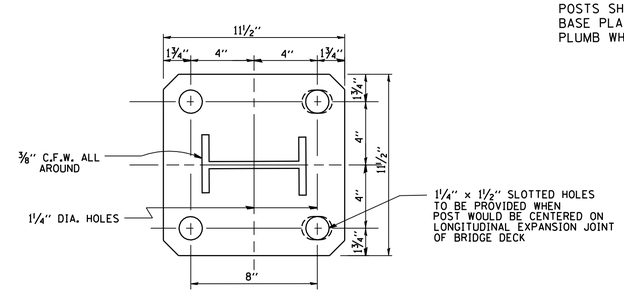

RAIL POST BASE PLATE
℘ 11½" x 1¼" x 11½"

SECTION B-B

THIS SHEET IS FOR INFORMATION ONLY

FILE NAME = W:\diststd\22x34\bm06.dgn	USER NAME = gaglianobt	DESIGNED -	REVISED - R. RITCHIE 05-02-00	STATE OF ILLINOIS DEPARTMENT OF TRANSPORTATION	STEEL PLATE BEAM GUARDRAIL SPECIAL	F.A. RTE.	SECTION	COUNTY	TOTAL SHEETS / SHEET NO.
		DRAWN - RFL	REVISED -						
	PLOT SCALE = 50.000 ' / IN.	CHECKED -	REVISED -			BM-06		CONTRACT NO.	
	PLOT DATE = 1/4/2008	DATE -	REVISED -		SCALE: NONE / SHEET NO. 1 OF 1 SHEETS / STA. TO STA.	FED. ROAD DIST. NO. 1	ILLINOIS	FED. AID PROJECT	