NOTE:

FOR DETAILS OF RAIL ELEMENTS, RAIL SPLICING, NUT, BOLT AND SIDE VIEW OF RAIL, SEE STANDARD 2230-2.

ALL WELDS SHALL BE GROUND SMOOTH

POSTS SHALL BE CUT AND WELDED TO THE BASE PLATE SO THAT THE POST WILL BE PLUMB WHEN ERECTED.

TWO PERCENT (2%) OF ALL ANCHOR BOLTS SHALL BE TEST LOADED IN PLACE, MINIMUM TEST LOAD=8 KIPS. IF ONE ANCHOR BOLT FAILS DURING THE TEST, TWO OTHER ANCHOR BOLTS SHALL BE TESTED. TESTING EQUIPMENT SHALL BE BOLT COMPANIES.

PROVIDE 1 1/8'' AND 2 1/16'' GALVANIZED SHIMS FOR 25% OF THE POSTS.

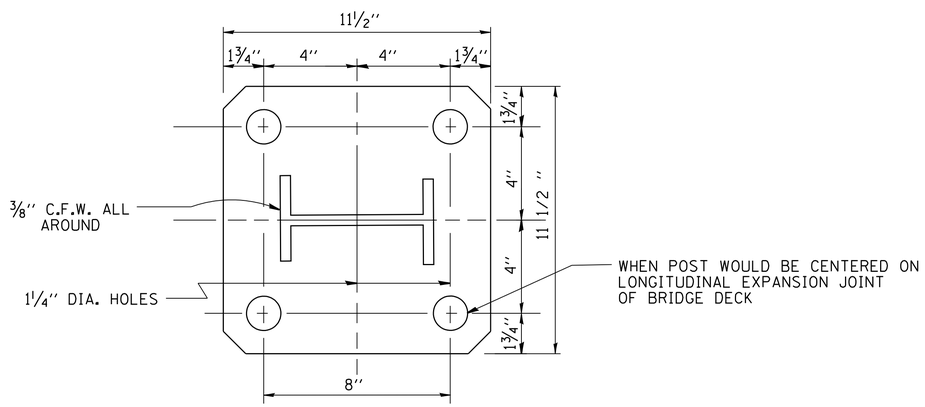

RAIL POST BASE PL

PL 11 1/2'' × 1 1/4'' × 11 1/2''

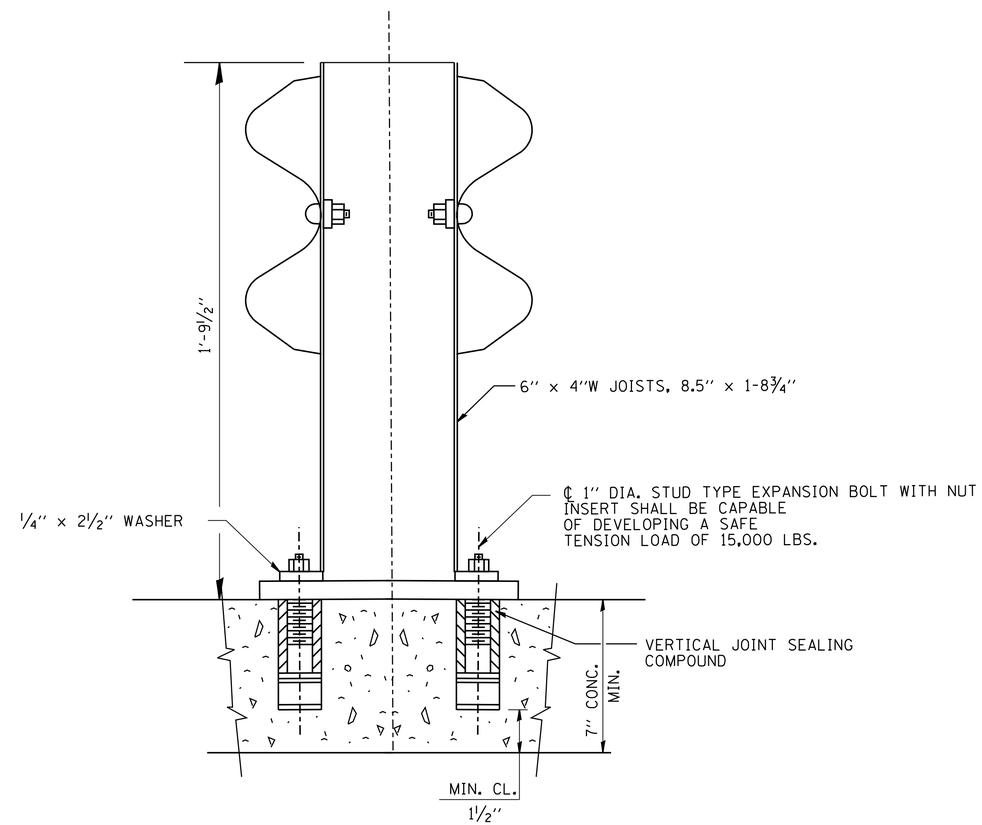

FILE NAME = W:\diststd\22x34\bm02.dgn	USER NAME = gaglianobt	DESIGNED -	REVISED - R. RITCHIE 05-02-00	STATE OF ILLINOIS DEPARTMENT OF TRANSPORTATION	ANCHOR DETAIL FOR STEEL PLATE BEAM GUARDRAIL ON CONCRETE	F.A. RTE.	SECTION	COUNTY	TOTAL SHEETS / SHEET NO.
		DRAWN - RFL	REVISED -						
	PLOT SCALE = 50.000 ' / IN.	CHECKED -	REVISED -			BM-02		CONTRACT NO.	
	PLOT DATE = 1/4/2008	DATE - 10-31-88	REVISED -		SCALE: NONE / SHEET NO. 1 OF 1 SHEETS / STA. / TO STA.	FED. ROAD DIST. NO. 1	ILLINOIS	FED. AID PROJECT	