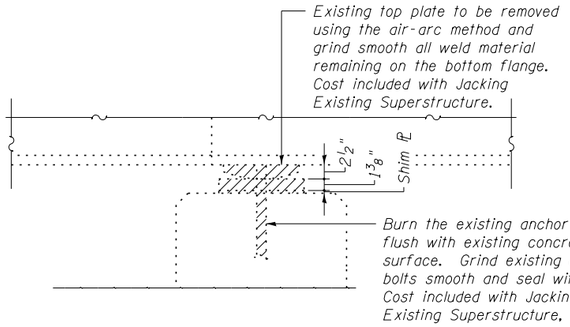

EXISTING PIER BEARING REMOVAL

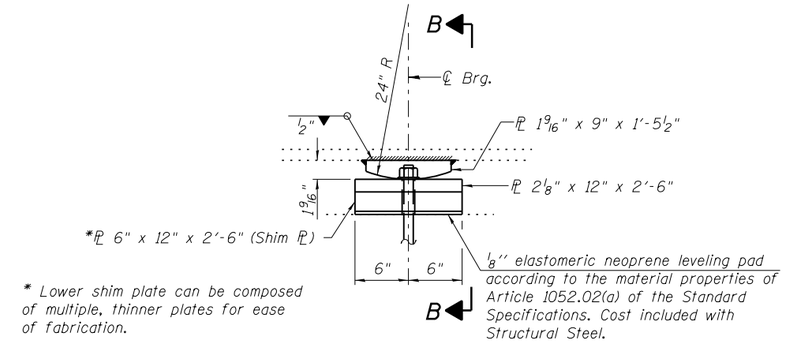

* Lower shim plate can be composed of multiple, thinner plates for ease of fabrication.

ELEVATION AT PIER

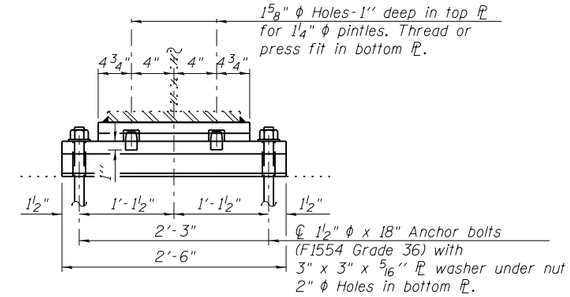

SECTION B-B

FIXED BEARING

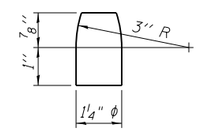

PINTLE

Notes:

Anchor bolts shall be ASTM F1554 all-thread (or an Engineer-approved alternate material) of the grade(s) and diameter(s) specified. The corresponding specified grade of AASHTO M314 anchor bolts may be used in lieu of ASTM F1554.

Anchor bolts at fixed bearings shall be installed in holes drilled after the supported member is in place.

Drilled and set anchor bolts shall be installed according to Article 521.06 of the Standard Specifications.

Two 1/8" adjusting shims shall be provided for each bearing in addition to all other plates or shims and placed as needed and as shown on bearing details.

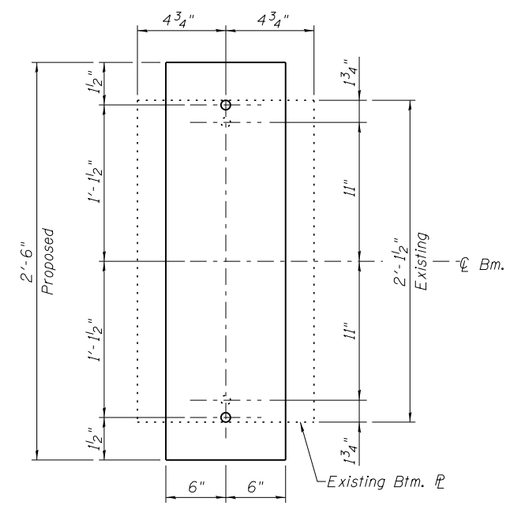

ANCHOR BOLT LAYOUT

Note: Some elements not to scale for clarity.

JACK AND REMOVE EXISTING BEARING PROCEDURE

(Center Pier)

1. The Contractor shall submit for approval by the Engineer, plans for jacking existing beams and installing new bearings prior to commencing any related work.
2. Jacking and removing existing bearings shall be done after existing concrete deck is removed and prior to pouring the concrete deck.
3. Prior to ordering any material, the Contractor shall verify shim plate thickness required at each bearing so that total height of new bearing and fill matches height of existing bearing and shim.
4. There shall be at least one jack per bearing, and the Jack shall be placed close to the bearings.
5. For limitations on lift amounts, see Special Provisions.
6. The new bearing shall be in place and the jacks shall be lowered before the new conctete deck is poured. Existing diaphragms to be unbolted due to differential deflections during stage construction.
7. Jacking against diaphragms is prohibited.
8. Cross frames are to be removed at the stage line prior to jacking and re-installed prior to the final deck pour.
9. Re-bolt existing diaphragms after completion of Stage III deck pour.

Prior to ordering any material, the Contractor shall verify in the field all bearing height and shim thickness dimensions.

BEAM REACTIONS

(Steel only)

RD (k)	38

Min. Jack Capacity = 30 Ton (Without Deck)

BILL OF MATERIAL

Item	Unit	Total
Furnishing and Erecting Structural Steel	Pound	8230
Anchor Bolts, 1 1/2"	Each	18
Jacking Existing Superstructure	L. Sum	1

FILE NAME = TR-420 over FAI-72.dgn	USER NAME =	DESIGNED - SAL	REVISED -
		CHECKED - MTH	REVISED -
	PLOT SCALE =	DRAWN - TJW	REVISED -
	PLOT DATE =	CHECKED - MTH	REVISED -

STATE OF ILLINOIS
DEPARTMENT OF TRANSPORTATION

PIER BEARING DETAILS
OVERPASS RD. (TR-420) OVER F.A.I.-72 - S.N. 084-0154
SHEET NO. 17 OF 25 SHEETS

F.A.I. RTE.	SECTION	COUNTY	TOTAL SHEETS	SHEET NO.
72	(84-10-1,2) RS-3	SANGAMON	194	164
		CONTRACT NO. 72C90		
FED. ROAD DIST. NO. 6	ILLINOIS	FED. AID PROJECT		