CONTRACT 72781

F.A.S. RTE.	SECTION	COUNTY	TOTAL SHEETS	SHEET NO.
1597	14 (W, RS-7)	ADAMS/PIKE	152	69

FED. ROAD DIST. NO. ILLINOIS FED. AID PROJECT

CONCRETE COLLAR SCHEDULE

Station	LT or RT	Section Type	Skew	Existing Culvert	Proposed Culvert						Collar		Reinforcement Bars										Expansion Bolts 3/4"	Class SI Concrete Collar
					I.D.	O.D.	Span	Wall	Height	Top			S Bar			U Bar						lb		
				Size	(in)	(in)	(ft)	(in)	(ft)	(in)	Width	Height	No	Size	Length (in)	No	Size	A	B	Lap	Length		Each	yd^3
1321+41.59	LT	A	0	2'x2'	30	37					4'-1"	4'-1"				4	#4	3'-7"	2'-6"	1'-4"	8'-7"	22.93	8	0.34
1321+41.59	RT	A	0	2'x2'	30	37					4'-1"	4'-1"				4	#4	3'-7"	2'-6"	1'-4"	8'-7"	22.93	8	0.34
1332+71.40	RT	A	0	6'x4'			6	7	4	7	8'-2"	6'-3"				4	#4	7'-8"	3'-7"	1'-4"	14'-10"	39.63	8	0.50
1345+71.89	RT	A	0	3'x5'			3	6	5	6	5'-0"	7'-1"				4	#4	4'-6"	4'-0"	1'-4"	12'-6"	33.40	8	0.41
TOTAL =													**0**			**16**						**118.90**	**32**	**1.59**
USE =													**0**			**16**						**120**	**32**	**1.6**

NOTE:
REINFORCEMENT BARS AND EXPANSION BOLTS
ARE INCLUDED IN THE COST OF CONCRETE COLLAR

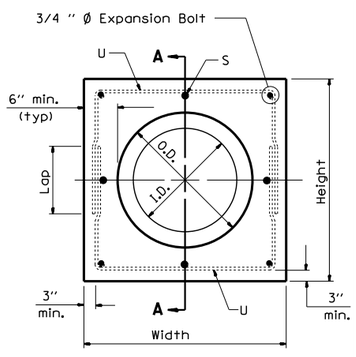

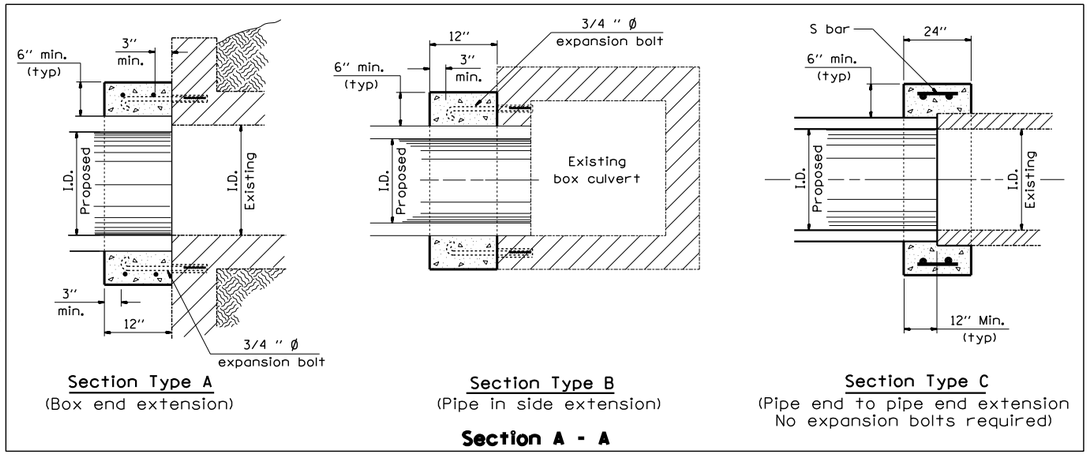

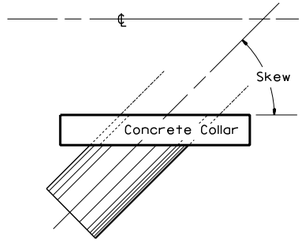

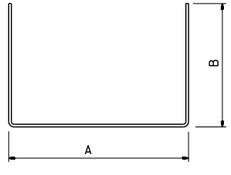

#5 U - bar

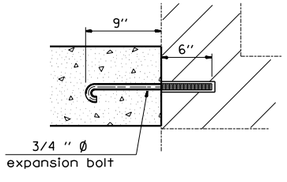

Expansion Bolt Detail

Notes:

1. Expansion bolts shall consist of self drilling expansion shields and ¾" Ø hooked bolts. Hooked bolts shall extend a minimum of 9" into new concrete. Minimum Certified Proof Load - 4,080 lbs.

2. Use minimum of 1 (one) expansion bolt at each corner.

REVISIONS	
NAME	DATE

ILLINOIS DEPARTMENT OF TRANSPORTATION

CONCRETE COLLAR AND CULVERT EXTENSION DETAILS

SCALE: VERT. HORIZ.

DATE

DRAWN BY DEW

CHECKED BY TCD

Z:\R\2010\R-10-013.12_IL-96 Pike Co to IL-57\MSV8\Design\37-50-details.dgn
8/16/2013
*REF01

D6 PROJECT: ED53799 FILE: DETAILS.DGN .