DETAIL FOR MAINLINE MILLING AND PAVING TRANSITIONS AT BUTT JOINT LOCATIONS

	Ⓐ STATION	TO	Ⓑ STATION	
F.A.P. 704 NORTHBOUND	32+60.00		32+95.00	EAST END OF JOB
F.A.P. 704 SOUTHBOUND	29+00.00		29+35.00	EAST END OF JOB
RAMP M	37+79.28		37+44.28	

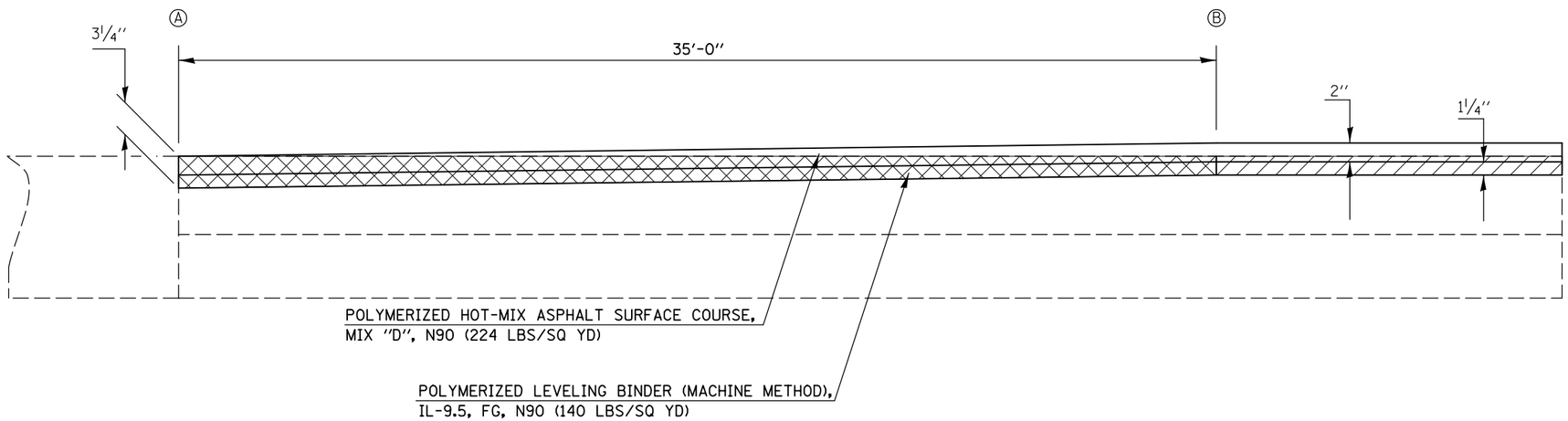

HOT-MIX ASPHALT SURFACE REMOVAL, 1½″

HOT-MIX ASPHALT SURFACE REMOVAL, BUTT JOINT

FILE NAME = c:\pw_work\pwidot\detersbj\d0157116\D570570-sht-details.dgn	USER NAME = detersbj	DESIGNED -	REVISED -	STATE OF ILLINOIS DEPARTMENT OF TRANSPORTATION	MILLING AND PAVING TRANSITION DETAILS	F.A.P. RTE.	SECTION	COUNTY	TOTAL SHEETS	SHEET NO.
		DRAWN -	REVISED -			704	57-2O(HB,HB-1)BR-1	MCLEAN	440	278
	PLOT SCALE = 40.0000 ′ / in.	CHECKED -	REVISED -					CONTRACT NO. 70570		
	PLOT DATE = 8/13/2013	DATE -	REVISED -		SCALE: SHEET NO. 1 OF 6 SHEETS STA. TO STA.		ILLINOIS FED. AID PROJECT			