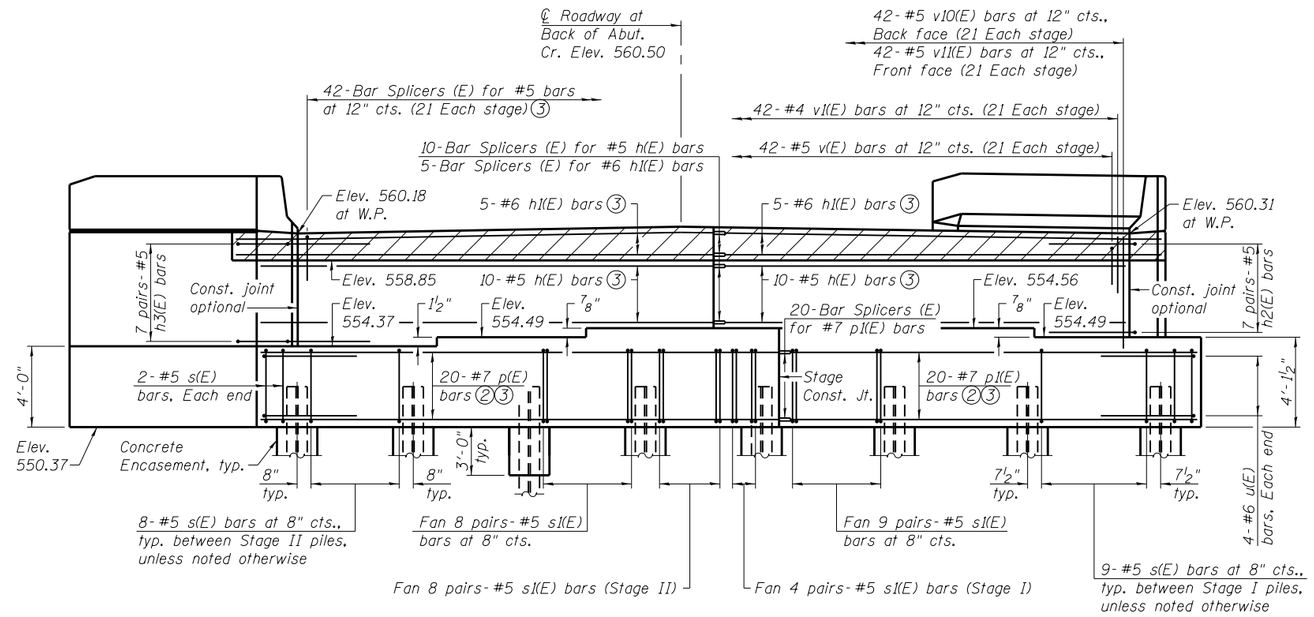

ELEVATION

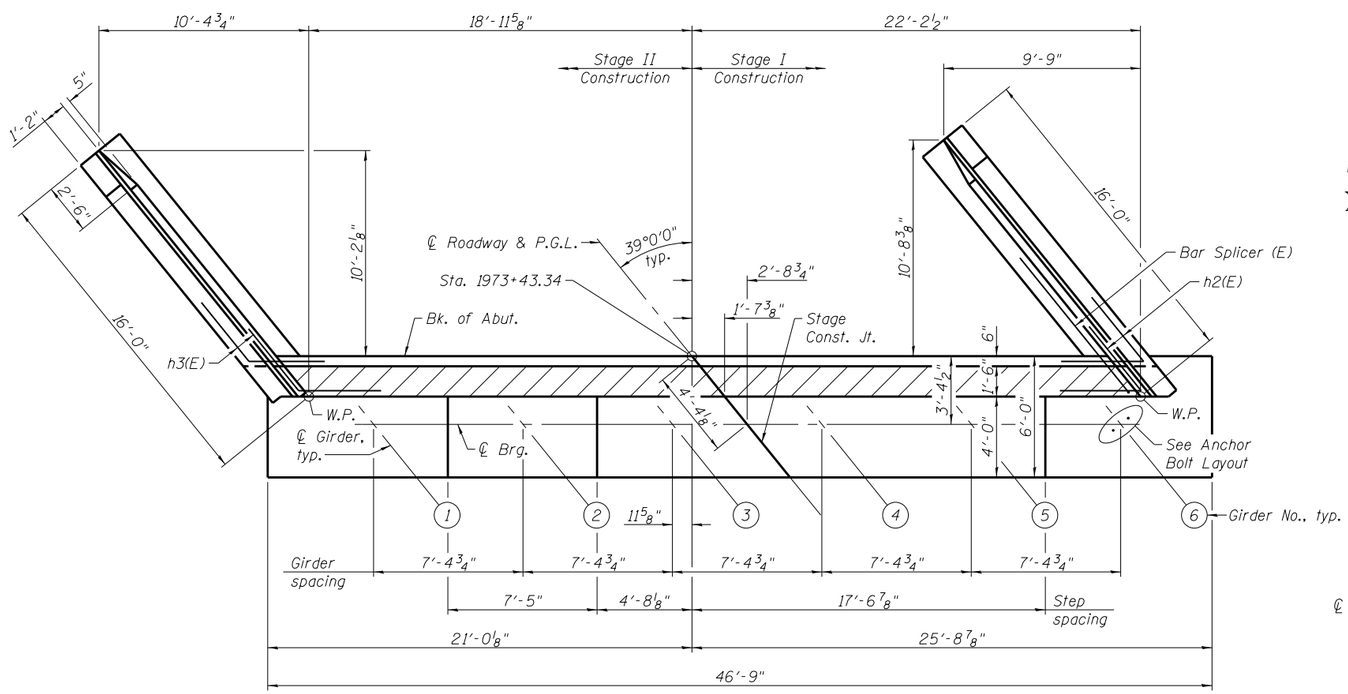

TOP VIEW

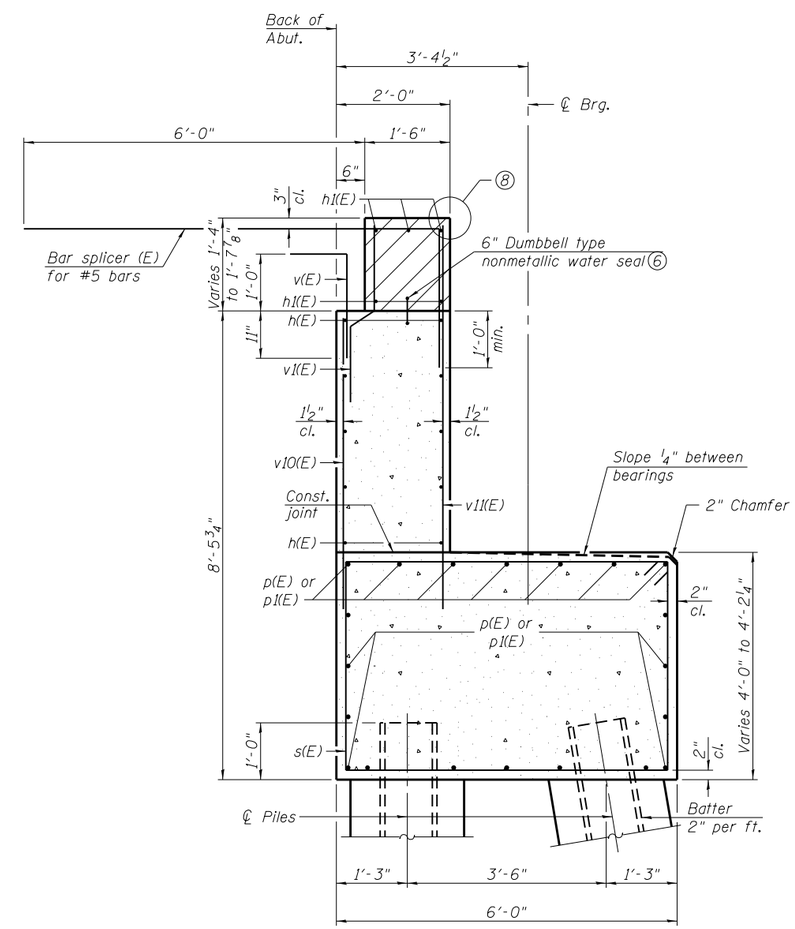

SEC. THRU ABUT.

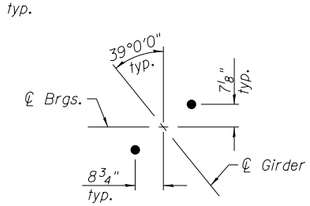

ANCHOR BOLT LAYOUT 4

Notes:

1. For details of Bar Splicers, see sheet 51 of 62.
2. See Field Cutting Diagram on sheet 41 of 62.
3. For bar locations, see Sec. Thru Abut.
4. Space reinforcement in cap to miss anchor bolts.
5. Hatched area to be poured after superstructure falsework has been removed. Cost of concrete included with Concrete Superstructure on sheet 20 of 62.
6. 6" Dumbbell type nonmetallic water seal shall be in accordance with Sections 503.12 and 1054 of the Standard Specifications. Cost included with Concrete Structures.
7. Pour steps monolithically with cap.
8. For Expansion Joint details, see sheet 25 of 62.
9. The abutment shall have all exposed surfaces of backwall, bridge seats, and pile cap treated with Concrete Sealer.

OATES ASSOCIATES
Engineering • Architecture
ILLINOIS
Eastport Business Center 1
100 Lanter Court, Suite 1
Collinsville, IL 62234
tel 618.345.2200
fax 618.345.7233
MISSOURI
Laclede Gas Building
720 Olive, Suite 1600
St. Louis, MO 63101
tel 314.588.8381
fax 314.588.9605
www.oatesassociates.com

USER NAME =	DESIGNED - JAD	REVISED	
	CHECKED - SJN	REVISED	
PLOT SCALE =	DRAWN - MAG	REVISED	
PLOT DATE =	CHECKED - JAD	REVISED	

STATE OF ILLINOIS
DEPARTMENT OF TRANSPORTATION

NORTH ABUTMENT DETAILS
STRUCTURE NO. 048-0100

SHEET NO. 40 OF 62 SHEETS

F.A.P. RTE.	SECTION	COUNTY	TOTAL SHEETS	SHEET NO.
626	(44-B-1)BR	KNOX	122	70
		CONTRACT NO. 68759		
		ILLINOIS FED. AID PROJECT		