Notes:
Pour steps monolithically with cap.
See Sheet 22 of 32 for Bar Details.
See Sheet 25 of 32 for Pile Details.
See Sheet 26 of 32 for Bar Splicer Details.

BF: Back Face
FF: Front Face
EF: Each Face

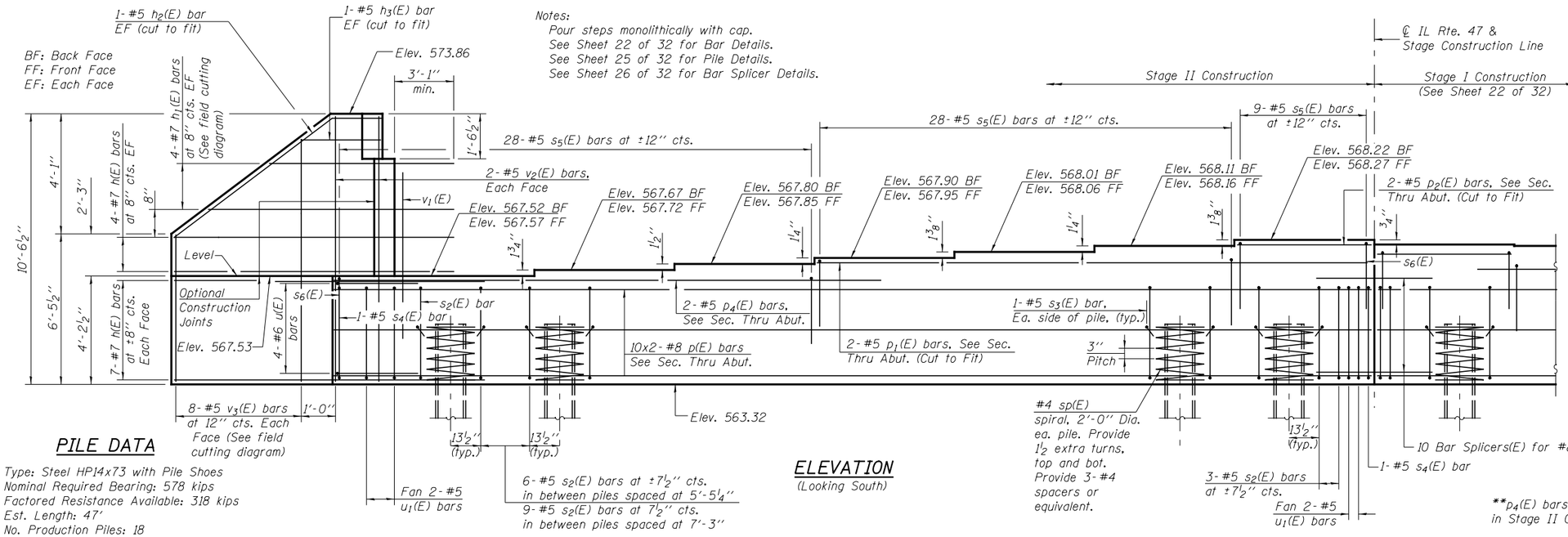

PILE DATA

Type: Steel HP14x73 with Pile Shoes
Nominal Required Bearing: 578 kips
Factored Resistance Available: 318 kips
Est. Length: 47'
No. Production Piles: 18
No. Test Piles: 1

ELEVATION

(Looking South)

**p4(E) bars are required only in Stage II Construction.

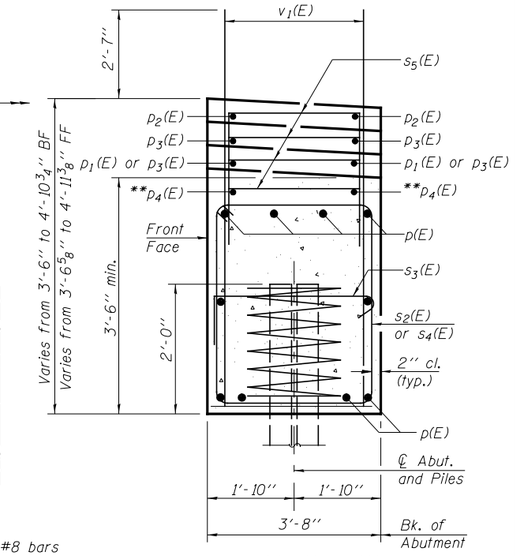

SEC. THRU ABUT.

(At Right Angles)

Piles shall be driven through 2'-0" diameter precored holes extending to elevation 554.6 according to Article 512.09(c) of the Standard Specifications. Cost included with driving piles.

Portions of a previous existing structure may need to be removed to allow driving of new piles. Precoring through the existing embankment and abutment according to Article 512.09(c) of the Standard Specifications may be an allowed option. Cost included with the Removal of Existing Structures.

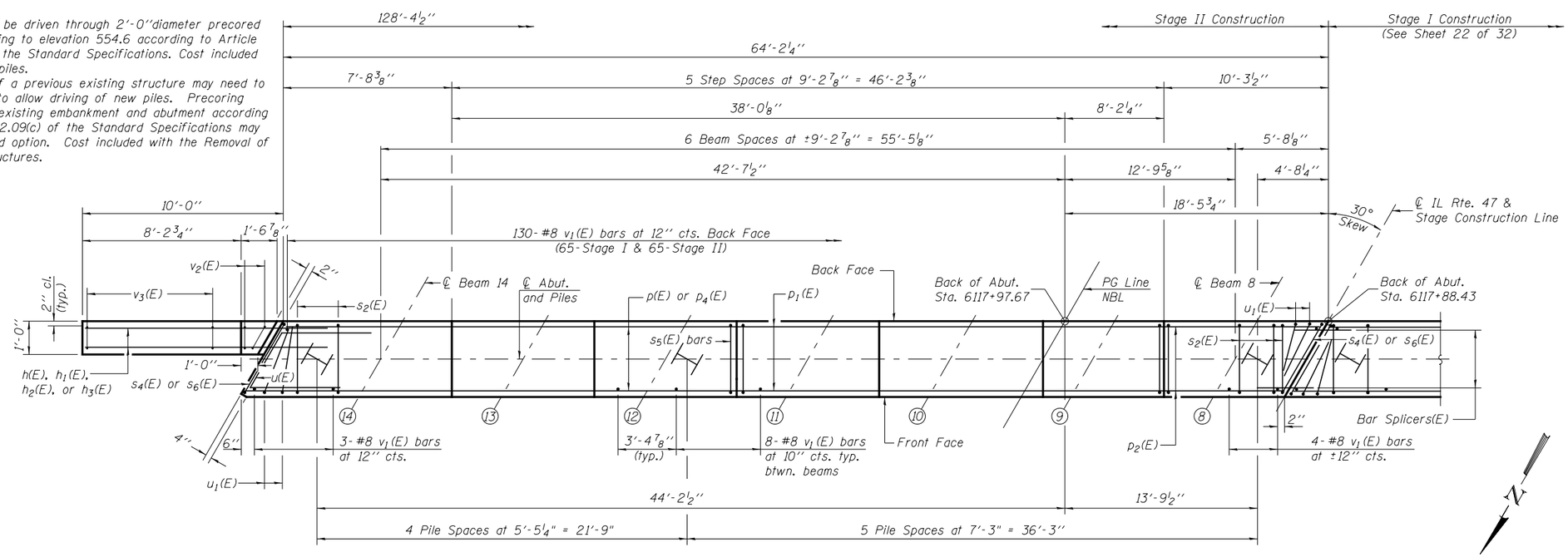

PLAN

MIN. BAR LAP

#8 bar = 7'-8"

SOUTH ABUTMENT BILL OF MATERIAL

Bar	No.	Size	Length	Shape
h(E)	42	#7	13'-0"	
h1(E)	8	#7	19'-0"	
h2(E)	4	#5	10'-6"	
h3(E)	4	#5	2'-6"	
p(E)	40	#8	35'-10"	
p1(E)	2	#5	37'-8"	
p2(E)	4	#5	9'-11"	
p3(E)	4	#5	20'-6"	
p4(E)	2	#5	30'-0"	
s2(E)	149	#5	13'-11"	
s3(E)	38	#5	4'-4"	
s4(E)	4	#5	14'-11"	
s5(E)	112	#5	8'-8"	
s6(E)	3	#5	9'-2"	
* sp(E)	19	#4	2'-0"	
u(E)	8	#6	11'-4"	
u1(E)	8	#5	9'-2"	
v1(E)	240	#8	5'-11"	
v2(E)	4	#5	10'-2"	
v3(E)	8	#5	15'-9"	
v4(E)	4	#5	9'-5"	
v5(E)	8	#5	14'-3"	
Structure Excavation		CU YD	460	
Concrete Structures		CU YD	82.4	
Reinforcement Bars, Epoxy Coated		POUND	13,990	
Furnishing Steel Piles HP14x73		FOOT	846	
Driving Piles		FOOT	846	
Test Pile Steel HP14x73		EACH	1	
Pile Shoes		EACH	19	

*Length is height of spiral.