CONTROLLER SEQUENCE

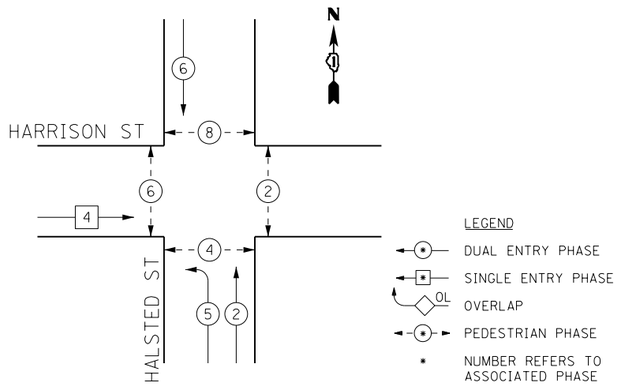

PHASE DESIGNATION DIAGRAM

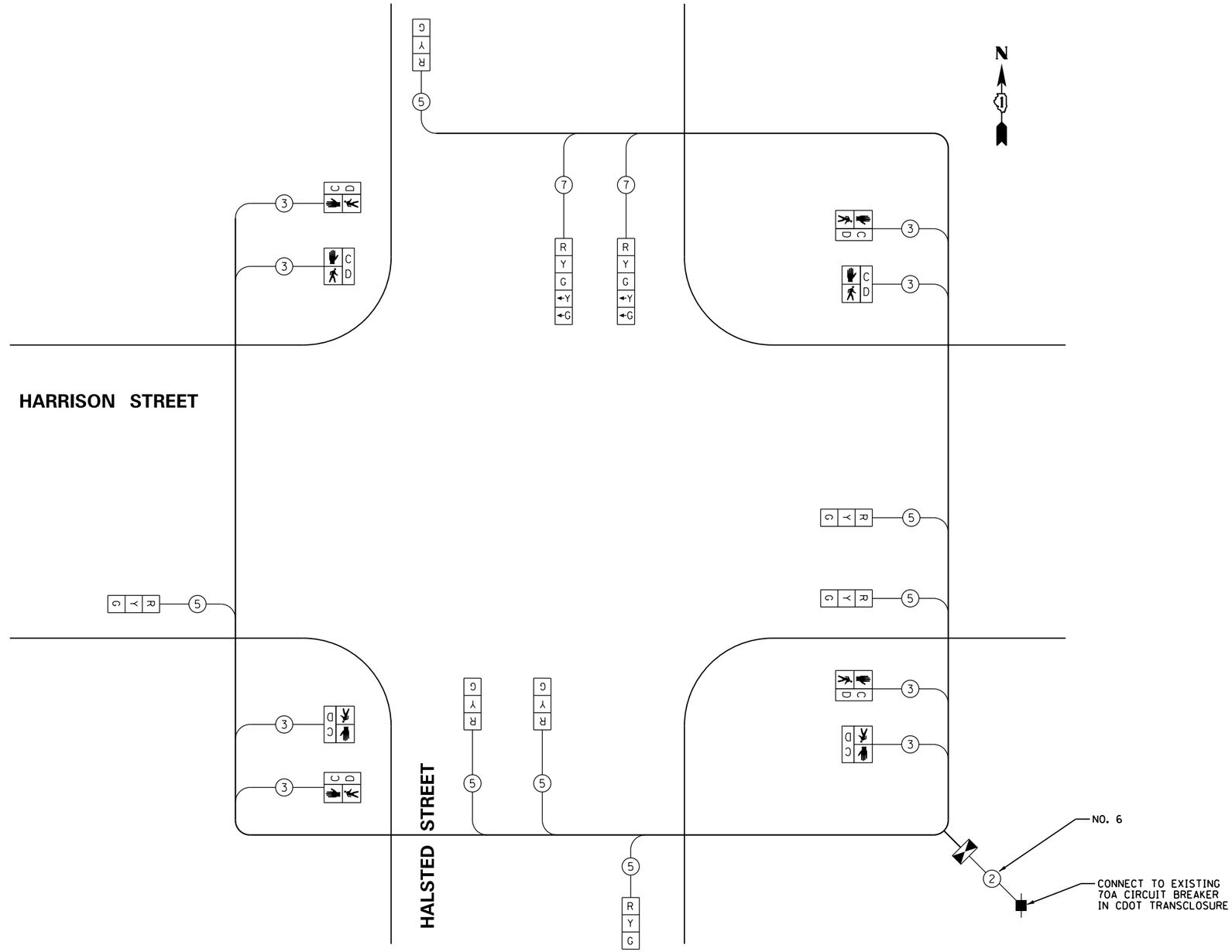

TEMPORARY CABLE PLAN
(ALL STAGES)

I.D.O.T. TRAFFIC SIGNAL INSTALLATION ELECTRICAL SERVICE REQUIREMENTS					
TYPE	NO. OF LAMPS	WATTAGE INCAND.	WATTAGE LED	% OPERATIONS	TOTAL WATTAGE
SIGNAL (RED)	9	135	17	0.50	76.50
(YELLOW)	9	135	25	0.25	56.25
(GREEN)	9	135	15	0.25	33.75
ARROW	4	135	12	0.10	4.80
PED. SIGNAL	8	90	25	1.00	200.00
CONTROLLER	1	100	100	1.00	100.00
ILLUM. SIGN			25	0.50	
VIDEO SYSTEM		150		1.00	
ENERGY COSTS TO:				TOTAL =	471.30

ILLINOIS DEPARTMENT OF TRANSPORTATION
DIVISION OF HIGHWAYS/DISTRICT 1
201 WEST CENTER COURT/SCHAUMBURG, IL 60196

ENERGY SUPPLY: CONTACT: _____
PHONE: _____
COMPANY: COM ED

RESTORATION OF WORK AREA. RESTORATION OF THE TRAFFIC SIGNAL WORK AREA SHALL BE INCIDENTAL TO THE RELATED PAY ITEM SUCH AS FOUNDATION, CONDUIT, HANDHOLE, TRENCH AND BACKFILL, ETC., AND NO EXTRA COMPENSATION SHALL BE ALLOWED. ALL ROADWAY SURFACES SUCH AS SHOULDERS, MEDIANS, SIDEWALKS, PAVEMENT, ETC. SHALL BE REPLACED IN KIND. ALL DAMAGE TO MOWED LAWNS SHALL BE REPLACED WITH AN APPROVED SOD, AND ALL DAMAGE TO UNMOWED FIELDS SHALL BE SEEDED IN ACCORDANCE WITH STANDARD SPECIFICATIONS 252 AND 250 RESPECTIVELY.

NOTE:

CONTRACTOR SHALL INSTALL CDOT APPROVED SIGNAL TIMING FOR TEMPORARY SIGNAL OPERATION AT THIS LOCATION. THIS WORK SHALL NOT BE PAID FOR SEPARATELY AND SHALL BE CONSIDERED INCLUDED IN "TEMPORARY TRAFFIC SIGNAL INSTALLATION".

FILE PATH = c:\pwworking\eccom00\gegedemer\d0204536\D160W26-sht-Ts-02.dgn

EJM ENGINEERING, INC.
411 South Wells Street Suite 1000
Chicago, Illinois 60607

D160W26-sht-Ts-02.dgn	DESIGNED - GG	REVISED -	
USER NAME = Ggedemer	DRAWN - GG	REVISED -	
PLOT SCALE = 1.0000 ' / in.	CHECKED - JW	REVISED -	
PLOT DATE = 8/14/2013	DATE - 08/20/13	REVISED -	

STATE OF ILLINOIS
DEPARTMENT OF TRANSPORTATION

TEMPORARY CABLE PLAN AND SEQUENCE OF OPERATION (ALL STAGES)
HALSTED ST AND HARRISON ST

SCALE: NONE | SHEET OF SHEETS | STA. TO STA.

F.A.I. RTE.	SECTION	COUNTY	TOTAL SHEETS	SHEET NO.
90/94/290	2013-008R	COOK	559	209
		CONTRACT NO. 60W26		
	ILLINOIS FED. AID PROJECT			