11-07-2025 LETTING ITEM 002

RTE.	SECTION	COUNTY	TOTAL SHEETS	SHEET NO.
2nd St	HC BRIDGE REPAIR	WHITESIDE	37	1
	ILLINOIS	CONTRACT No. 46944		

STATE OF ILLINOIS
DEPARTMENT OF TRANSPORTATION
DEPARTMENT OF NATURAL RESOURCES

PROPOSED
HIGHWAY PLANS

IDOT / IDNR STATEWIDE
IDNR PARK ROADS
SECTION: HC BRIDGE REPAIR
BRIDGE DECK REPLACEMENT
WHITESIDE COUNTY

C-30-011-25
IDNR FILE No. 1-22-053

INDEX OF SHEETS

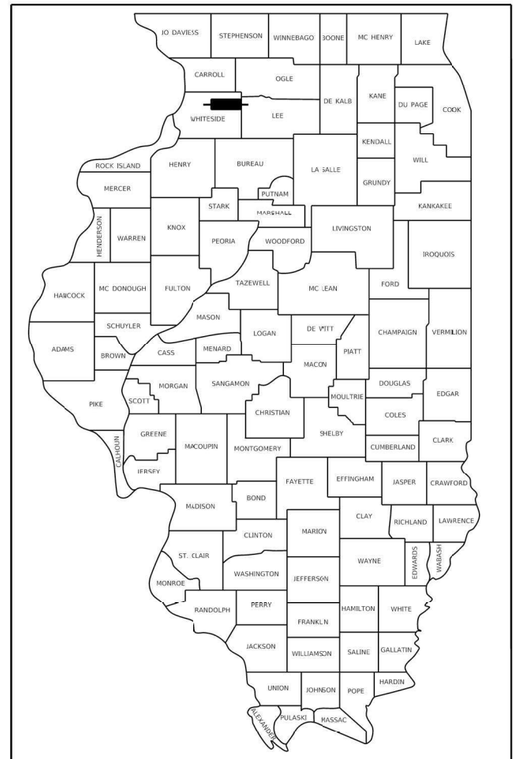

LOCATION OF SECTION INDICATED THUS:

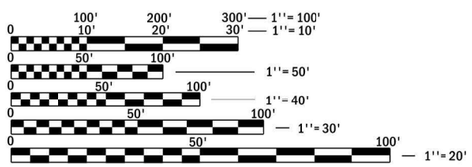

FULL SIZE PLANS HAVE BEEN PREPARED USING STANDARD ENGINEERING SCALES. REDUCED SIZED PLANS WILL NOT CONFORM TO STANDARD SCALES. IN MAKING MEASUREMENTS ON REDUCED PLANS, THE ABOVE SCALES MAY BE USED.

J.U.L.I.E.
JOINT UTILITY LOCATING INFORMATION FOR EXCAVATORS
1 (800) 892-0123
OR 811

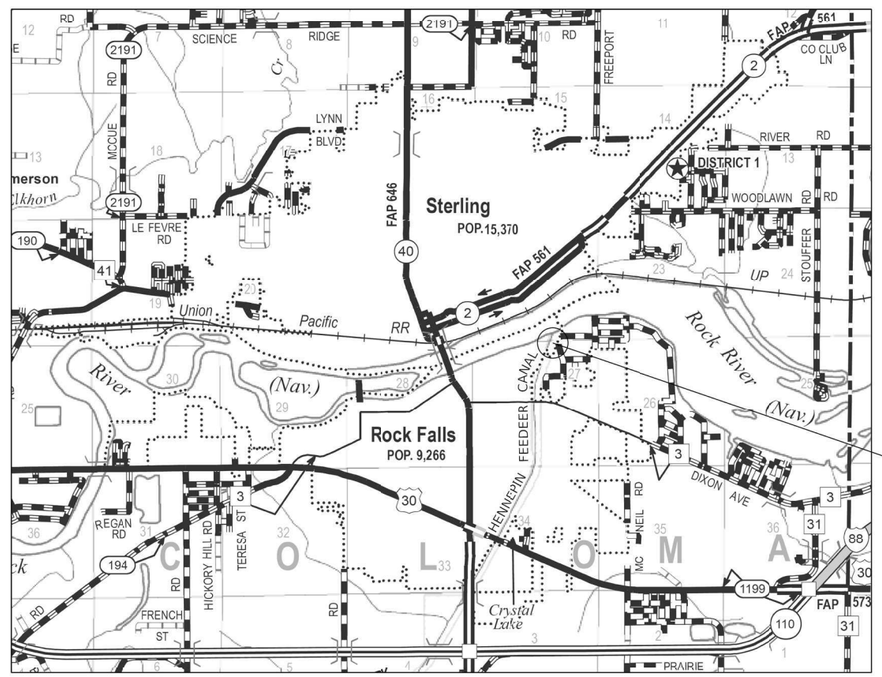

LOCATION MAP

DATE: 8/22/2025

ROBERT H. DALTON
062-033925
REGISTERED PROFESSIONAL ENGINEER OF ILLINOIS

ROBERT H. DALTON

ILLINOIS PROFESSIONAL ENGINEER
NO. 062-033925
EXPIRATION DATE 11/30/2025

STATE OF ILLINOIS
DEPARTMENT OF TRANSPORTATION

SUBMITTED 10-3-25
REGIONAL ENGINEER

October 3, 20 25
ENGINEER OF DESIGN AND ENVIRONMENT

October 3, 20 25
DIRECTOR OF HIGHWAYS PROJECT IMPLEMENTATION

PRINTED BY THE AUTHORITY OF THE STATE OF ILLINOIS

VEENSTRA & KIMM INC.
A Kleinfelder Company

CONTRACT No. 46944

JOB No. 7021-008 VEENSTRA & KIMM, INC. DESIGN FIRM REGISTRATION NUMBER 184-001939

LEGEND

- EXISTING POWER POLE
- EXISTING GUY WIRE
- EXISTING SIGN
- EXISTING WOOD POST
- EXISTING FENCE POST
- EXISTING MAILBOX
- 32" EXISTING DECIDUOUS TREE
- 12" EXISTING EVERGREEN TREE
- EXISTING BUSH
- EXISTING JUNCTION BOX
- EXISTING ELECTRIC SPLICE BOX
- EXISTING TELEPHONE SPLICE BOX
- EXISTING WATER VALVE
- EXISTING CATCH BASIN
- EXISTING MANHOLE
- EXISTING END SECTION
- EXISTING PARKING BLOCK
- EXISTING A.D.A. PARKING SYMBOL
- EXISTING RIPRAP
- X — X — X — X EXISTING FENCE LINE
- EXISTING DITCH LINE
- EXISTING GUARD RAIL
- 825 EXISTING CONTOURS
- EXISTING TREE LINE
- EXISTING BUILDING LIMITS
- EXISTING CULVERT
- SOIL BORINGS
- PROPOSED SILT FENCE

IDOT HIGHWAY STANDARDS

000001-08	STANDARD SYMBOLS, ABBREVIATIONS AND PATTERNS
001001-02	AREAS OF REINFORCEMENT BARS
001006	DECIMAL OF AN INCH AND OF A FOOT
280001-07	TEMPORARY EROSION CONTROL SYSTEMS
515001-04	NAME PLATE FOR BRIDGES
542401-04	METAL FLARED END SECTION FOR PIPE CULVERTS
602301-04	INLET - TYPE A
602306-03	INLET - TYPE B
602601-06	PRECAST REINFORCED CONCRETE FLAT SLAB TOP
602701-02	MANHOLE STEPS
604001-05	FRAME AND LIDS TYPE 1
604011-05	FRAME AND GRATE TYPE 3V
606001-08	CONCRETE CURB TYPE B AND COMBINATION CONCRETE CURB AND GUTTER
630001-13	STEEL PLATE BEAM GUARDRAIL
630116	BACKSIDE PROTECTION OF GUARDRAIL
630201-07	PCC / HMA STABILIZATION AT STEEL PLATE BEAM GUARDRAIL
631026-06	TRAFFIC BARRIER TERMINAL, TYPE 5
631031-18	TRAFFIC BARRIER TERMINAL, TYPE 6
701901-10	TRAFFIC CONTROL DEVICES
B.L.R. 17-4	TRAFFIC CONTROL DEVICES - DAY LABOR CONSTRUCTION
B.L.R. 21-9	TYPICAL APPLICATION OF TRAFFIC CONTROL DEVICES FOR CONSTRUCTION ON RURAL LOCAL HIGHWAYS

THE FOLLOWING RATES OF APPLICATION HAVE BEEN USED TO CALCULATE THE PLAN QUANTITIES

BITUMINOUS MATERIALS (PRIME COAT)	0.25 LB / SQ FT
BITUMINOUS MATERIALS (TACK COAT)	0.10 LB / SQ FT
BITUMINOUS CONCRETE SURFACE / BINDER	0.056 TON / SQ YD / INCH

THE FOLLOWING MIXTURE REQUIREMENTS ARE APPLICABLE FOR THIS PROJECT:

LOCATION(S):	HMA	
MIXTURE USE(S):	BINDER COURSE	SURFACE COURSE
PG:	PG58-28	PG58-28
DESIGN AIR VOIDS:	4.0% @ N50	4.0% @ N50
MIXTURE COMPOSITION (MIXTURE GRADATION):	IL-9.5	IL-9.5FG
FRICTION AGGREGATE:	N/A	MIX "C"
MIXTURE WEIGHT:	112 LBS/SQ YD/INCH	
QUALITY MANAGEMENT PROGRAM:	QCQA	

NOTE:
WHEN A NUMBER OF ROLLER PASSES IS SPECIFIED, THE CONTRACTOR MAY OPT TO USE INTELLIGENT COMPACTION IN LIEU OF DENSITY TESTING UNDER THE QUALITY CONTROL FOR PERFORMANCE (QCP) PROGRAM.

GENERAL NOTES

1) SPECIFICATIONS SHALL BE THE "STANDARD SPECIFICATIONS FOR ROAD AND BRIDGE CONSTRUCTION" ADOPTED JANUARY 1, 2022.

2) ALL ELEVATIONS ARE REFERENCED TO ELEVATIONS ESTABLISHED BY OTHERS.

3) WHERE SECTION OR SUBSECTION MONUMENTS ARE ENCOUNTERED, THE ENGINEER SHALL BE NOTIFIED BEFORE SUCH MONUMENTS ARE REMOVED. THE CONTRACTOR SHALL PROTECT AND CAREFULLY PRESERVE ALL PROPERTY MARKERS AND MONUMENTS UNTIL THE OWNER AND AUTHORIZED SURVEYOR OR AGENT HAS WITNESSED OR OTHERWISE REFERENCED THEIR LOCATION. IF THE ENGINEER DECIDES TO HAVE THE CONTRACTOR RESET THE MONUMENT, THIS WORK WILL BE PAID FOR IN ACCORDANCE WITH ARTICLE 109.04 OF THE STANDARD SPECIFICATIONS FOR HIGHWAY AND BRIDGE CONSTRUCTION.

4) THE CONTRACTOR SHALL CONTACT J.U.L.I.E. (JOINT UTILITY LOCATING INFORMATION FOR EXCAVATORS) TO HAVE PUBLIC AND PRIVATE UTILITIES LOCATED PRIOR TO ANY CONSTRUCTION.

5) THE CONTRACTOR SHALL BE RESPONSIBLE FOR PROTECTING UTILITY PROPERTY FROM CONSTRUCTION OPERATIONS AS OUTLINED IN ARTICLE 107.26 OF THE STANDARD SPECIFICATIONS. THE J.U.L.I.E. NUMBER IS (800) 892-0123. A MINIMUM OF 48 HOURS ADVANCE NOTICE IS REQUIRED.

6) ANY REFERENCE TO THE STANDARDS THROUGHOUT THE PLANS SHALL BE INTERPRETED TO BE THE LATEST STANDARDS OF THE ILLINOIS DEPARTMENT OF TRANSPORTATION AS INCLUDED IN THESE PLANS.

7) ALL DETAILS IN THE PLANS SHALL GOVERN CONSTRUCTION OF THIS PROJECT, AND IN CASE OF CONFLICT WITH ANY STANDARD DRAWINGS INCLUDED, THE SAID DETAILS SHALL TAKE PRECEDENCE AND GOVERN.

8) THE CONTRACTOR SHALL ASSUME COMPLETE RESPONSIBILITY FOR JOB SITE CONDITIONS DURING THE COURSE OF CONSTRUCTION, INCLUDING SAFETY OF ALL PERSONS AND PROPERTY, THAT THIS REQUIREMENT SHALL APPLY CONTINOUSLY AND NOT BE LIMITED TO NORMAL WORKING HOURS, AND THAT THE CONTRACTOR SHALL DEFEND, IDEMNIFY, AND HOLD THE OWNER AND THE ENGINEER HARMLESS FROM ANY AND ALL LIABILITY, REAL OR ALLEGED, IN CONNECTION WITH THE PERFORMANCE OF WORK ON THIS PROJECT, EXCEPTING FOR THE LIABILITY ARISING FROM THE SOLE NEGLIGENCE OF THE OWNER OR THE ENGINEER.

9) ALL CONSTRUCTION LAYOUT SHALL BE THE RESPONSIBILITY OF THE CONTRACTOR.

10) ALL BORROW/WASTE/USE SITES MUST BE APPROVED BY THE DEPARTMENT PRIOR TO REMOVING ANY MATERIAL FROM THE PROJECT OR INITIATING ANY EARTHMOVING ACTIVITIES, INCLUDING TEMPORARY STOCKPILING OUTSIDE THE LIMITS OF CONSTRUCTION.

11) THE CONTRACTOR SHALL SEED ALL DISTURBED AREAS WITHIN THE PROJECT LIMITS. SEEDING MIX SHALL BE "SEEDING, CLASS 1B". FERTILIZER AND CLASS 7 SEEDING SHALL BE APPLIED TO ALL DISTURBED AREAS AND INCORPORATED INTO THE SEEDBED, PRIOR TO FINAL SEEDING, AT THE RATE SPECIFIED IN SECTIONS 250 AND 252 OF THE STANDARD SPECIFICATIONS. MULCH METHOD I SHALL BE APPLIED OVER ALL SEEDED AREAS.

12) THE BASELINES SHOWN THROUGHOUT THE PLANS ARE A "BEST FIT" ALIGNMENT OF THE CENTER OF THE EXISTING ROADWAYS FOR THE PURPOSE OF STATIONING AND DETERMINATION OF OFFSETS. IN MOST CASES, IT DOES NOT REPRESENT THE PHYSICAL CENTER OF THE EXISTING ROADWAY SURFACE.

13) FOR THE EXCAVATION NECESSARY TO WIDEN THE ROADS, THE CONTRACTOR SHALL COORDINATE WITH THE ENGINEER TO MAKE A DETERMINATION AS TO THE WIDTH OF EXCAVATION NECESSARY TO ACHIEVE A STABLE BASE FOR THE WIDENED ROAD SURFACE.

CODE NO.	ITEM	UNIT	TOTAL QUANTITY	100% STATE CONSTRUCTION CODE ROADWAY 0013 2nd STREET	BRIDGE 0013 S.N. 098-3751
20200100	EARTH EXCAVATION	CU YD	437	437	
20700220	POROUS GRANULAR EMBANKMENT	CU YD	10		10
20800150	TRENCH BACKFILL	CU YD	18	18	
21101615	TOPSOIL FURNISH AND PLACE, 4"	SQ YD	876	876	
25000115	SEEDING, CLASS 1B	ACRE	0.2	0.2	
25000400	NITROGEN FERTILIZER NUTRIENT	POUND	20	20	
25000500	PHOSPHORUS FERTILIZER NUTRIENT	POUND	20	20	
25000600	POTASSIUM FERTILIZER NUTRIENT	POUND	20	20	
25100105	MULCH, METHOD 1	ACRE	0.2	0.2	
28000250	TEMPORARY EROSION CONTROL SEEDING	POUND	11	11	
28000400	PERIMETER EROSION BARRIER	FOOT	638	638	
28000510	INLET FILTERS	EACH	4	4	
28100705	STONE DUMPED RIPRAP, CLASS A3	SQ YD	18	18	
28200200	FILTER FABRIC	SQ YD	24	24	

* DENOTES SPECIAL PROVISION

100% STATE

CODE NO.	ITEM	UNIT	TOTAL QUANTITY	CONSTRUCTION CODE: ROADWAY 0013 2nd STREET	CONSTRUCTION CODE: BRIDGE 0013 S.N. 098-3751
31102600	SUBBASE GRANULAR MATERIAL, TYPE C 9"	SQ YD	150	150	
35101100	AGGREGATE BASE COURSE, TYPE A 12"	SQ YD	730	730	
40200500	AGGREGATE SURFACE COURSE, TYPE A 6"	SQ YD	180	180	
40600275	BITUMINOUS MATERIALS (PRIME COAT)	POUND	1643	1643	
40600290	BITUMINOUS MATERIALS (TACK COAT)	POUND	730	730	
40600982	HOT-MIX ASPHALT SURFACE REMOVAL - BUTT JOINT	SQ YD	31	31	
40602978	HOT-MIX ASPHALT BINDER COURSE, IL- 9.5, N50	TON	57	57	
40604000	HOT-MIX ASPHALT SURFACE COURSE, IL-9.5FG, MIX "C", N50	TON	57	57	
42400200	PORTLAND CEMENT CONCRETE SIDEWALK 5 INCH	SQ FT	1363	1363	
44000600	SIDEWALK REMOVAL	SQ FT	1376	1376	
48203021	HOT-MIX ASPHALT SHOULDERS, 6"	SQ YD	150	150	
50101500	REMOVAL OF EXISTING SUPERSTRUCTURES	EACH	1		1
50102400	CONCRETE REMOVAL	CU YD	11.1		11.1
50200100	STRUCTURE EXCAVATION	CU YD	20.4		20.4

* DENOTES SPECIAL PROVISION

CODE NO.	ITEM	UNIT	TOTAL QUANTITY	100% STATE CONSTRUCTION CODE ROADWAY 0013 2nd STREET	BRIDGE 0013 S.N. 098-3751
50300225	CONCRETE STRUCTURES	CU YD	33.7		33.7
50300255	CONCRETE SUPERSTRUCTURE	CU YD	26.3		26.3
50400405	PRECAST PRESTRESSED CONCRETE DECK BEAMS (21" DEPTH)	SQ FT	1444		1444
50400505	PRECAST PRESTRESSED CONCRETE DECK BEAMS (27" DEPTH)	SQ FT	1898		1898
50800205	REINFORCEMENT BARS, EPOXY COATED	POUND	14230		14230
50901720	BICYCLE RAILING	FOOT	160		160
50901750	PARAPET RAILING	FOOT	100		100
50901760	PIPE HANDRAIL	FOOT	37		37
51100100	SLOPE WALL 4 INCH	SQ YD	70	70	
51500100	NAME PLATES	EACH	1		1
52000110	PREFORMED JOINT STRIP SEAL	FOOT	66		66
54262715	METAL FLARED END SECTIONS 15"	EACH	1	1	
550A0050	STORM SEWERS, CLASS A, TYPE 1 12"	FOOT	48	48	
550B0360	STORM SEWERS, CLASS B, TYPE 2 15"	FOOT	40	40	

* DENOTES SPECIAL PROVISION

100% STATE

	CODE NO.	ITEM	UNIT	TOTAL QUANTITY	CONSTRUCTION CODE: ROADWAY 0013 2nd STREET	CONSTRUCTION CODE: BRIDGE 0013 S.N. 098-3751
	60235705	INLETS, TYPE A, TYPE 3V FRAME AND GRATE	EACH	2	2	
	60240215	INLETS, TYPE B, TYPE 1 FRAME, CLOSED LID	EACH	1	1	
	60240222	INLETS, TYPE B, TYPE 3V FRAME AND GRATE	EACH	2	2	
	60605000	COMBINATION CONCRETE CURB AND GUTTER, TYPE B-6.24	FOOT	82	82	
*	63000001	STEEL PLATE BEAM GUARDRAIL, TYPE A, 6 FOOT POSTS	FOOT	90	90	
*	63000003	STEEL PLATE BEAM GUARDRAIL, TYPE A, 9 FOOT POSTS	FOOT	80	80	
*	63100070	TRAFFIC BARRIER TERMINAL, TYPE 5	EACH	2	2	
*	63100085	TRAFFIC BARRIER TERMINAL, TYPE 6	EACH	1	1	
*	63100167	TRAFFIC BARRIER TERMINAL, TYPE 1 (SPECIAL) TANGENT	EACH	4	4	
	63200310	GUARDRAIL REMOVAL	FOOT	467	467	
	67000500	ENGINEER'S FIELD OFFICE, TYPE B	CAL MO	6	3	3
	67100100	MOBILIZATION	L SUM	1	0.5	0.5
*	78005110	EPOXY PAVEMENT MARKING - LINE 4"	FOOT	420	420	
*	78008210	POLYUREA PAVEMENT MARKING TYPE I - LINE 4"	FOOT	903	903	

* DENOTES SPECIAL PROVISION

100% STATE

	CODE NO.	ITEM	UNIT	TOTAL QUANTITY	CONSTRUCTION CODE ROADWAY 0013 2nd STREET	CONSTRUCTION CODE BRIDGE 0013 S.N. 098-3751
	X0326806	WASHOUT BASIN	L SUM	1	0.5	0.5
	X5030301	CONCRETE WEARING SURFACE (VARIABLE DEPTH)	SQ YD	372		372
*	X6310187	TRAFFIC BARRIER TERMINAL, TYPE 6 (MODIFIED)	EACH	1	1	
	X6640300	CHAIN LINK FENCE REMOVAL	FOOT	16	16	
	X7010216	TRAFFIC CONTROL AND PROTECTION, (SPECIAL)	L SUM	1	0.5	0.5
	Z0001900	ASBESTOS BEARING PAD REMOVAL	EACH	44		44
	Z0012754	STRUCTURAL REPAIR OF CONCRETE (DEPTH EQUAL TO OR LESS THAN 5 INCHES)	SQ FT	17		17
	Z0013798	CONSTRUCTION LAYOUT	L SUM	1	0.5	0.5

* DENOTES SPECIAL PROVISION

VEENSTRA & KIMM INC.
A Kleinfelder Company

USER NAME = jbegue	DESIGNED - DHC/JEB	REVISED -
	DRAWN - JEB	REVISED -
PLOT SCALE = 40.0000 ' / in.	CHECKED - MAH/RHD	REVISED -
PLOT DATE = 8/25/2025	DATE - 8/22/2025	REVISED -

STATE OF ILLINOIS
DEPARTMENT OF TRANSPORTATION
DEPARTMENT OF NATURAL RESOURCES

SUMMARY OF QUANTITIES
2nd STREET OVER HENNEPIN FEEDER CANAL

SCALE: NA | SHEET 5 OF 5 SHEETS | STA. 8+00.00 TO STA. 12+00.00

RTE.	SECTION	COUNTY	TOTAL SHEETS	SHEET NO.
2nd St	HC BRIDGE REPAIR	WHITESIDE	37	7
		CONTRACT NO. 46944		
		ILLINOIS FED. AID PROJECT		

REV. 9/29/25 REV. 9/23/25

PAVING & GUARD RAIL SCHEDULE

STATION	TO	STATION	SLB GRAN MAT C 9" (SQ YD) 31102600	AGG BASE CSE TA 12" (SQ YD) 35101100	AGG SURF CSE TA 6" (SQ YD) 40200500	BIT MATLS (PR CT) (POUND) 40600275	BIT MATLS (TACK CT) (POUND) 40600290	HMA SURF REM BUTT JOINT (SQ YD) 40600982	HMA BC IL-9.5 N50 (TON) 40602978	HMA SC IL-9.5FG C N50 (TON) 40604000	PCC SW 5 INCH (SQ FT) 42400200	HMA SHLDS 6" (SQ YD) 48203021	COMB CONC C & G, TY B-6.24 (FOOT) 60605000	ST PL BEAM GR TY A 6' POSTS (FOOT) 63000001	ST PL BEAM GR TY A 9' POSTS (FOOT) 63000003	TR BAR TERM TYPE 5 (EACH) 63100070	TR BAR TERM TYPE 6 (EACH) 63100085	TR BAR TERM T1, SPL TANG (EACH) 63100085	CONCRETE WEAR SURF (SQ YD) X5030301	TR BAR TERM TYPE 6 (MOD) (EACH) X6310187
2nd STREET - STRUCTURE # 098-3751																				
8+50.00	TO	9+47.67	87	288		648	288	17	23	23	786	87		50	64	1		2		
9+47.67	TO	10+52.42																	372	
10+52.42	TO	11+40.00	63	442	180	995	442	14	34	34	577	63	82	40	16	1	1	2		1
TOTAL			**150**	**730**	**180**	**1,643**	**730**	**31**	**57**	**57**	**1,363**	**150**	**82**	**90**	**80**	**2**	**1**	**4**	**372**	**1**

SEEDING AND EROSION CONTROL SCHEDULE

STATION	LT/RT	STATION	LT/RT	TOPSOIL F & P, 4" (SQ YD) 21101615	SEEDING CLASS 1B (ACRE) 25000115	NITROGEN FERT NUTRIENT (POUND) 25000400	PHOSPHORUS FERT NUTRIENT (POUND) 25000500	POTASSIUM FERT NUTRIENT (POUND) 25000600	MULCH METHOD 1 (ACRE) 25100105	TEMP EROSION CONT SEEDING (POUND) 28000250	PER EROSION BARRIER (FOOT) 28000400	INLET FILTERS (EACH) 28000510	STONE DUMPED RIPRAP, CLASS A3 (SQ YD) 28100705	FILTER FABRIC (SQ YD) 28200200	SLOPE WALL 4 INCH (SQ YD) 51100100	WASHOUT BASIN (L SUM) X0326806
2nd STREET - STRUCTURE # 098-3751																
8+50.00	LT	9+47.67	LT	209	0.05	5	5	5	0.05	3	149				21	
8+50.00	RT	9+47.67	RT	190	0.04	4	4	4	0.04	2	169				36	
10+52.42	LT	11+40.00	LT	295	0.07	7	7	7	0.07	4	168	2	18	24		
10+52.42	RT	11+40.00	RT	182	0.04	4	4	4	0.04	2	152	2			13	
AS DIRECTED																1
TOTAL				**876**	**0.20**	**20**	**20**	**20**	**0.20**	**11**	**638**	**4**	**18**	**24**	**70**	**1**

PAVEMENT MARKING SCHEDULE

STATION	TO	STATION	LT/RT	EPOXY MRKNG - LINE 4" (FOOT) 78005110	POLYUREA PAV'T MRKNG - LINE 4" (FOOT) 78008210
2nd STREET - STRUCTURE # 098-3751					
8+50.00	TO	9+47.67	LT/RT		392
9+47.57	TO	10+52.42	LT/RT	420	
10+52.42	TO	11+40.00	LT/RT		511
TOTAL				420	903

DRAINAGE SCHEDULE

STATION	OFFSET	STATION	OFFSET	TRENCH BACKFILL (CU YD) 20800150	METAL FLARED END SECT 15" (EACH) 54262715	STORM SEWERS CL A, TY 1 12" (FOOT) 550A0050	STORM SEWERS CL B, TY 2 15" (FOOT) 550B0360	INLETS TA T3V F&G (EACH) 60235705	INLETS TB T1F CL (EACH) 60240215	INLETS TB T3V F&G (EACH) 60240222
10+73.60	10' LT							1		
10+73.60	10' LT	10+87.50	10' LT	5		13				
10+87.50	10' LT									1
10+87.50	10' LT	10+87.50	10' RT	8		22				
10+73.60	10' RT							1		
10+73.60	10' RT	10+87.50	10' RT	5		13				
10+87.50	10' RT									1
10+87.50	10' RT	10+87.50	32' RT				20			
10+82.00	32' RT								1	
10+82.00	32' RT	10+64.00	41' RT				20			
10+64.00	41' RT				1					
		TOTAL	=	18	1	48	40	2	1	2

REMOVAL SCHEDULE

STATION	LT/RT	STATION	LT/RT	SIDEWALK REMOVAL (SQ FT) 44000600	GUARDRAIL REMOVAL (FOOT) 63200310	CHAIN LINK FENCE REM (FOOT) X6640300
8+07	24' RT	9+49	16' RT	914		
8+12	18' RT	9+50	15' RT		136	
8+23	14' LT	9+50	14' LT		127	
8+50	LT/RT	9+48	LT/RT			
9+47	LT/RT	9+49	LT/RT			
10+51	20' RT	10+80	33' RT			16
10+51	LT/RT	10+53	LT/RT			
10+51	14' LT	11+53	15' LT		102	
10+51	15' RT	11+53	17' RT		102	
10+51	16' RT	11+54	22' RT	462		
10+52	LT/RT	11+40	LT/RT			
8+12		8+12				
8+12		8+12				
		TOTAL	=	1,376	467	16

EARTHWORK SCHEDULE

1 Location	2 Earth Excavation 20200100	3 Earth Excavation 25% Adjustment For Shrinkage	4 Embankment	5 Earthwork Balance Waste (+) or Shortage (-)
	Cubic Yard	Cubic Yard	Cubic Yard	Cubic Yard
2nd STREET				
Sta 8+25.00 to 9+47.67	152	114	40	74
Bridge Omission				
Sta 10+52.42 to 11+55.00	285	214	24	190
TOTAL	437	328	64	264

Columns 1, 2, & 4 — Location and Quantities from Cross Sections: Earth Exc = Cut, Embankment = Fill
Column 3 — Quantity of Earth Excavation (Cut) With 25% Adjustment for Shrinkage
Column 5 — Earthwork Req'd: (-) = Quantity of Fill or Embankment needed.
(+) = Quantity to be Wasted

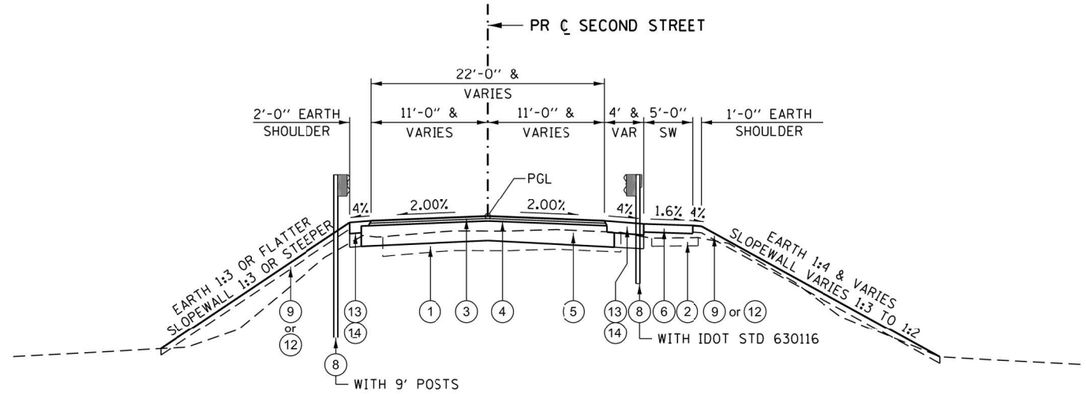

TYPICAL SECTION - 2nd STREET

STA 8+50.00 TO STA 9+47.67

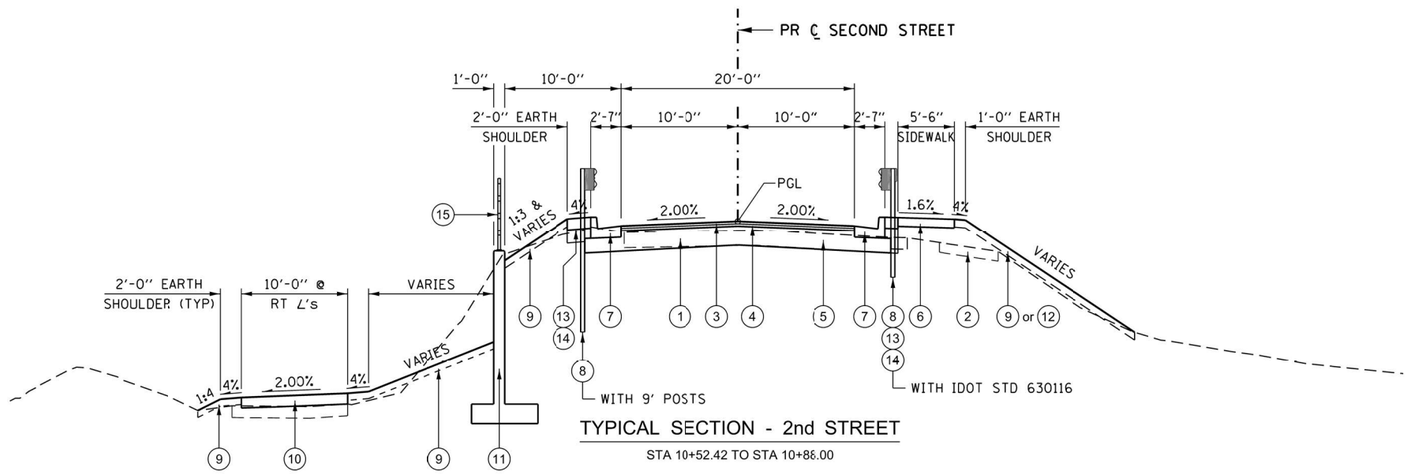

TYPICAL SECTION - 2nd STREET

STA 10+52.42 TO STA 10+88.00

1. EX HMA & AGGREGATE BASE PAVEMENT
2. EX CONCRETE SIDEWALK
3. PR HMA SURFACE COURSE, IL-9.5FG, MIX "C", N50 1½"
4. PR HMA BINDER COURSE, IL-9.5 N50 1½"
5. PR AGGREGATE BASE COURSE, TYPE A 12"
6. PR PORTLAND CEMENT CONCRETE SIDEWALK 5"
7. PR COMB CONCRETE CURB & GUTTER, TYPE B-6.24
8. PR STEEL PLATE BEAM GUARDRAIL
9. PR TOPSOIL FURNISH & PLACE 4"
10. PR AGGREGATE SURFACE COURSE, TYPE B
11. PR RETAINING WALL
12. PR SLOPE WALL 4"
13. PR HOT-MIX ASPHALT SHOULDERS 6"
14. PR SUBBASE GRANULAR MATERIAL, TYPE C 9"
15. PR PIPE HANDRAIL

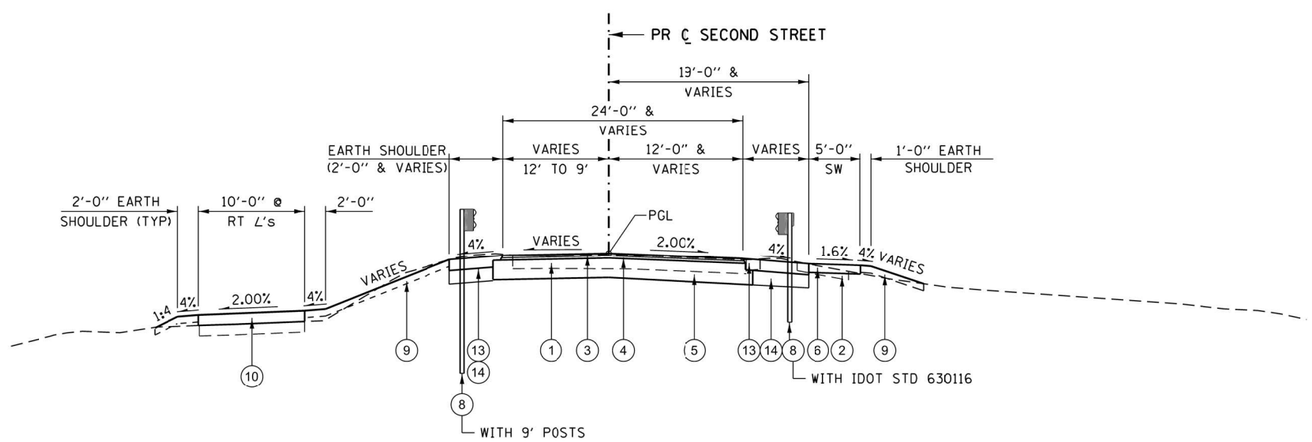

TYPICAL SECTION - 2nd STREET

STA 10+88.00 TO STA 11+40.00

MODEL: Default
FILE NAME: J:\0700\0702-DOT-IDNR-Park-Roads\0702-0001-0008 PTB207 055 WOB Hennepin Feeder Canal Design and Planning\CADD\CAD Sheets\D246944-sht 009 Typical Sections.dgn

VEENSTRA & KIMM INC.
A Kleinfelder Company

USER NAME = jbegue	DESIGNED - JEB	REVISED -	
	DRAWN - JEB	REVISED -	
PLOT SCALE = 40.0000 ' / in.	CHECKED - RHD/MAH	REVISED -	
PLOT DATE = 9/4/2025	DATE - 8/22/2025	REVISED -	

STATE OF ILLINOIS
DEPARTMENT OF TRANSPORTATION
DEPARTMENT OF NATURAL RESOURCES

TYPICAL SECTIONS - 2nd STREET
2nd STREET OVER HENNEPIN FEEDER CANAL

SCALE: NTS | SHEET 1 OF 1 SHEET | STA. 8+50.00 TO STA. 11+40.00

RTE.	SECTION	COUNTY	TOTAL SHEETS	SHEET NO.
2nd St	HC BRIDGE REPAIR	WHITESIDE	37	9
		CONTRACT NO. 46944		
	ILLINOIS	FED. AID PROJECT		

JOB No. 7021-002 VEENSTRA & KIMM, INC. DESIGN FIRM REGISTRATION NUMBER 184-001939

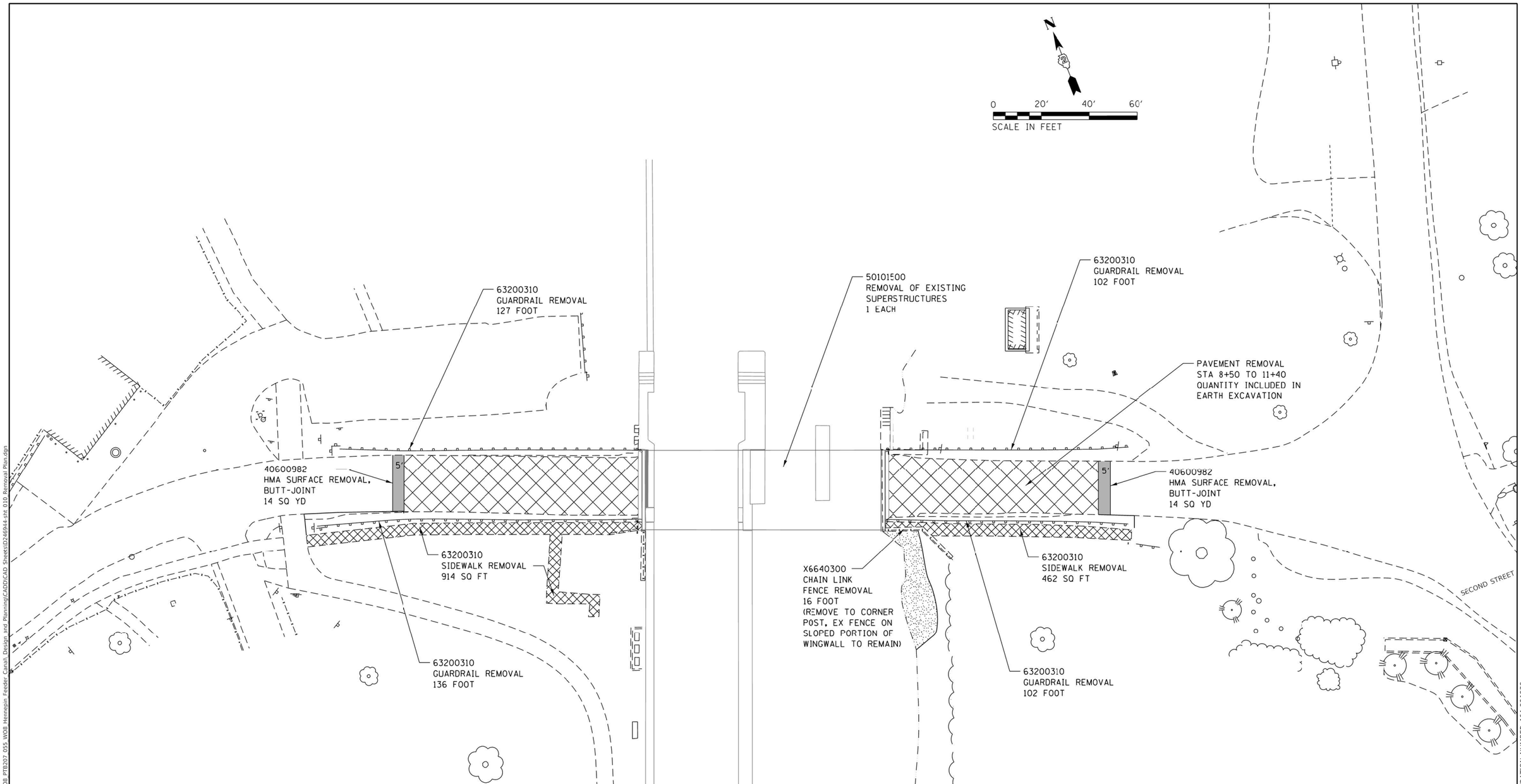

MODEL: Default
FILE NAME: \\vksprfs1\sprshare\07000\0702-DOT-IDNR-Park-Roads\0702-0001-0008_PTB207_055_WO8_Hennepin_Feeder_Canal_Design and Planning\CADD\CAD Sheets\D246944-sht_010_Removal Plan.dgn

JOB No. 7021-008 VEENSTRA & KIMM, INC. DESIGN FIRM REGISTRATION NUMBER 184-001939

VEENSTRA & KIMM INC.
A Kleinfelder Company

USER NAME = jbegue	DESIGNED - JEB	REVISED -	
	DRAWN - JEB	REVISED -	
PLOT SCALE = 40.0000 ' / in.	CHECKED - RHD	REVISED -	
PLOT DATE = 8/23/2025	DATE - 8/22/2025	REVISED -	

STATE OF ILLINOIS
DEPARTMENT OF TRANSPORTATION
DEPARTMENT OF NATURAL RESOURCES

EXISTING AND REMOVAL PLAN
2nd STREET OVER HENNEPIN FEEDER CANAL

SCALE: 1" = 20 | SHEET 1 OF 1 SHEETS | STA. 8+00.00 TO STA. 12+00.00

RTE.	SECTION	COUNTY	TOTAL SHEETS	SHEET NO.
2nd St	HC BRIDGE REPAIR	WHITESIDE	37	10
		CONTRACT NO. 46944		
	ILLINOIS	FED. AID PROJECT		

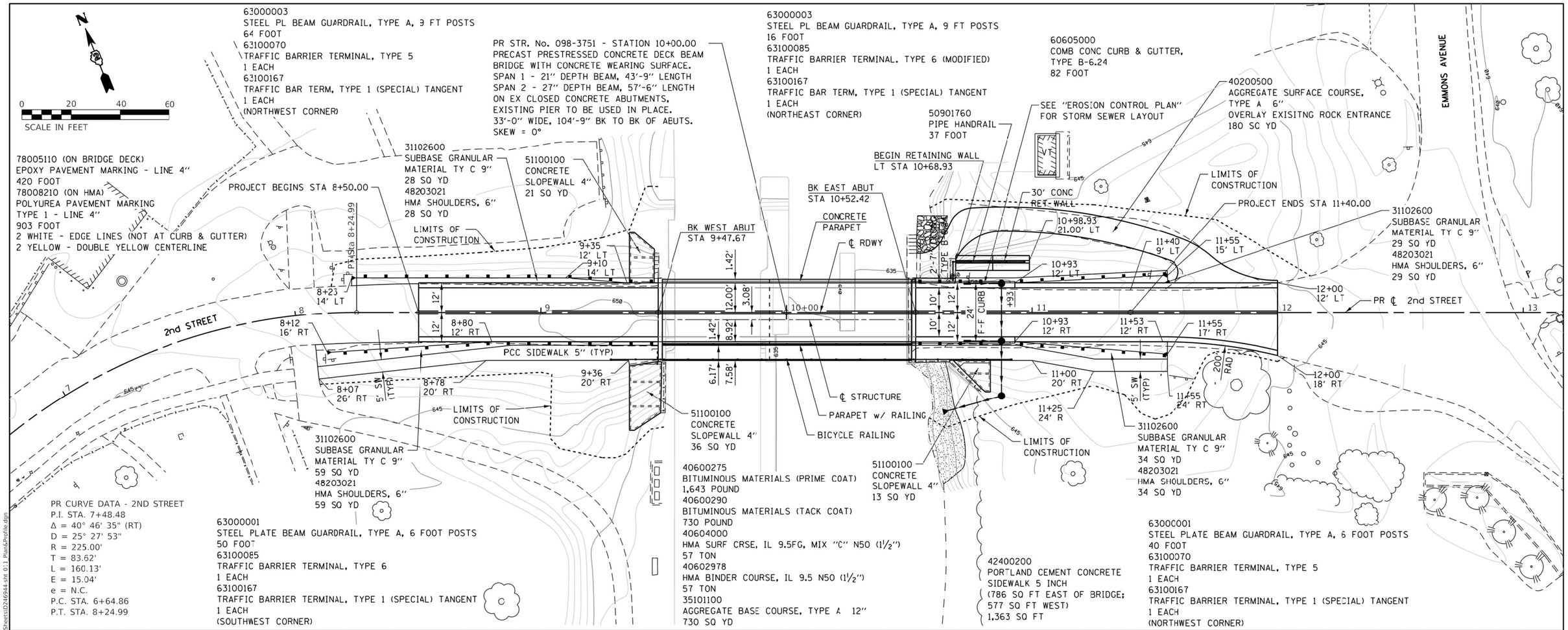

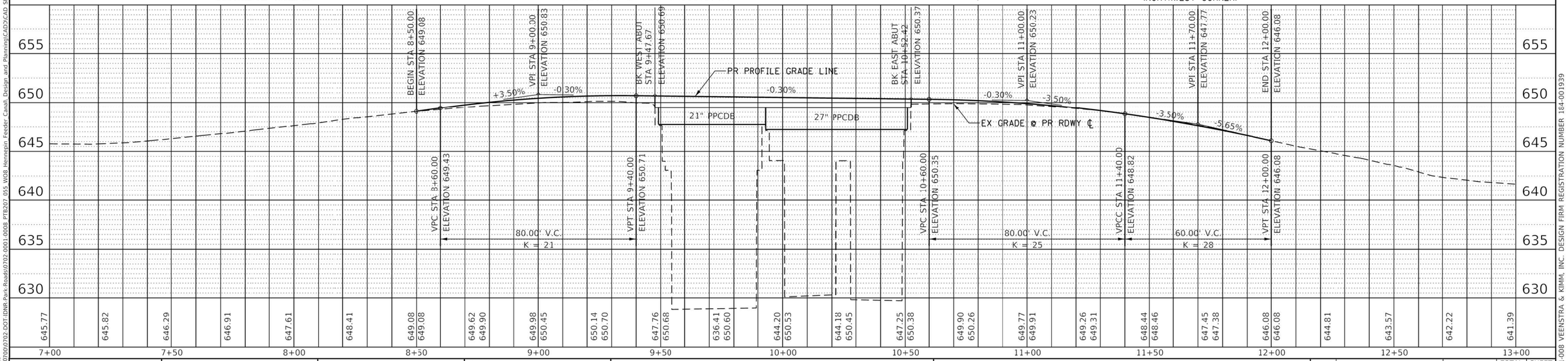

PLAN — SURVEYED / PLOTTED / ALIGNMENT CHECKED / RT OF WAY CHECKED / CADD FILE NAME / NOTE BOOK / NO. / BY / DATE

PROFILE — SURVEYED / PLOTTED / GRADES CHECKED / E.M. NOTED / STRUCTURE NOTATNS CHKED / NOTE BOOK / NO. / BY / DATE

MODEL: Default
FILE NAME: J:\07000\0702-DOT-IDNR-Park-Roads\0702-0001-0008 PTB207 055 W08 Hennepin Feeder Canal\ Design and Planning\CADD\CAD Sheets\D246944-sht 01 Plan&Profile.dgn

VEENSTRA & KIMM INC.
A Kleinfelder Company

USER NAME = jbegue	DESIGNED - JEB	REVISED -
	DRAWN - JEB	REVISED -
PLOT SCALE = 40.0000 ' / in.	CHECKED - RHD	REVISED -
PLOT DATE = 9/3/2025	DATE - 8/22/2025	REVISED -

STATE OF ILLINOIS
DEPARTMENT OF TRANSPORTATION
DEPARTMENT OF NATURAL RESOURCES

PLAN & PROFILE
2nd STREET OVER HENNEPIN FEEDER CANAL

SCALE: 1" = 20 | SHEET 1 OF 1 SHEETS | STA. 8+50.00 TO STA. 11+40.00

RTE.	SECTION	COUNTY	TOTAL SHEETS	SHEET NO.
2nd St	HC BRIDGE REPAIR	WHITESIDE	37	11
	STR. No. 098-3751	CONTRACT NO. 46944		
		ILLINOIS FED. AID PROJECT		

JOB No. 7021-008 VEENSTRA & KIMM, INC. DESIGN FIRM REGISTRATION NUMBER 184.001939

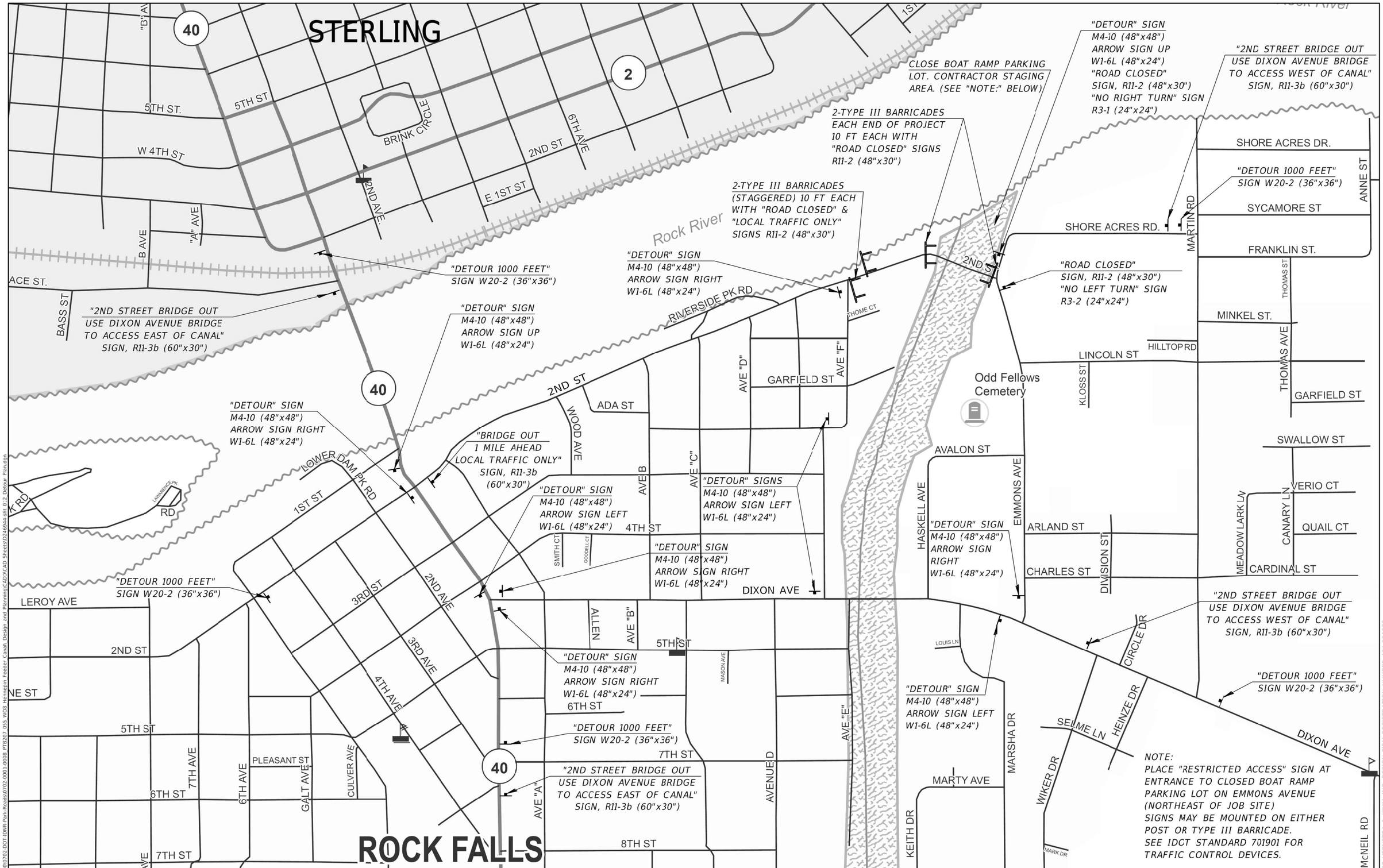

MODEL: Default
FILE NAME: J:\070\00702-DOT-IDNR-Park-Roads\0702-0001-0008 PTB207-055 W08 Hennepin Feeder Canal\ Design and Planning\CAD\CAD Sheets\D246944.dgn 0-2 Detour Plan.dgn

VEENSTRA & KIMM INC.
A Kleinfelder Company

USER NAME = jbegue	DESIGNED - JEB	REVISED -	
	DRAWN - JEB	REVISED -	
PLOT SCALE = 400.000 ' / in.	CHECKED - RHD/MAH	REVISED -	
PLOT DATE = 9/1/2025	DATE - 8/22/2025	REVISED -	

STATE OF ILLINOIS
DEPARTMENT OF TRANSPORTATION
DEPARTMENT OF NATURAL RESOURCES

DETOUR PLAN
2nd STREET OVER HENNEPIN FEEDER CANAL

SCALE: NA | SHEET 1 OF 2 SHEETS | STA. 8+00.00 TO STA. 12+00.00

RTE.	SECTION	COUNTY	TOTAL SHEETS	SHEET NO.
2nd St	HC BRIDGE REPAIR	WHITESIDE	37	12
		CONTRACT No. 46944		
	ILLINOIS	FED. AID PROJECT		

JOB No. 7021-002 VEENSTRA & KIMM, INC. DESIGN FIRM REGISTRATION NUMBER 184-001939

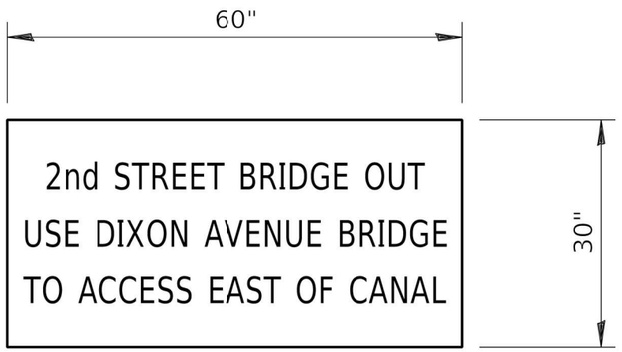

SIGN, R11-3b

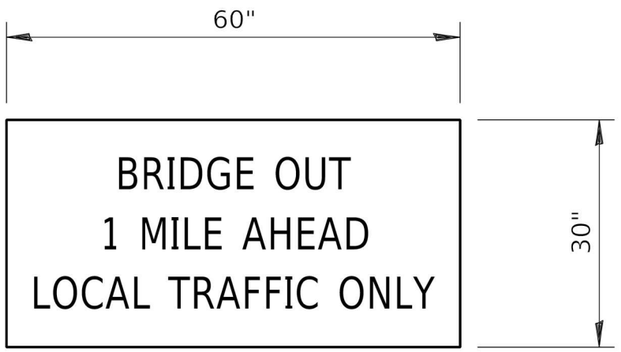

SIGN, R11-3b

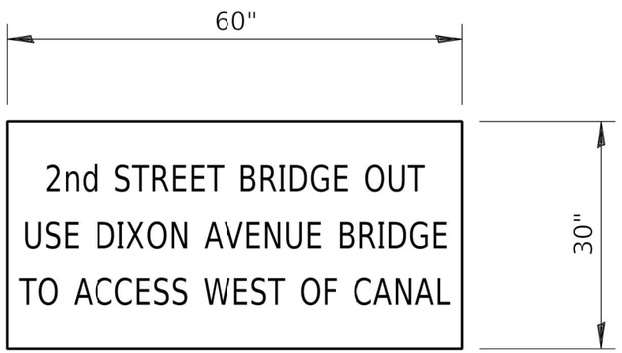

SIGN, R11-3b

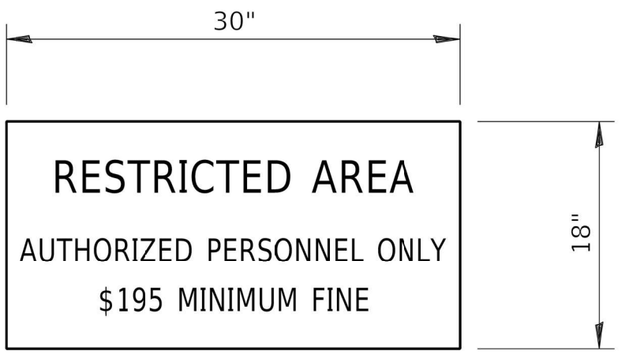

RESTRICTED ACCESS SIGN DETAIL
SIGN, R11-3b
OR APPROVED ALTERNATE

TYPE III BARRICADE
10 FT EACH WITH
"ROAD CLOSED" SIGNS
R11-2 (48"x30")

MODEL: Default
FILE NAME: J:\0700\0702-DOT-IDNR-Park-Roads\0702-0001-0008_PTB207_055_W08_Hennepin_Feeder_Canal_Design and Planning\CAD\CAD Sheets\D246944-sht 0-3 Detour Signs.dgn

VEENSTRA & KIMM INC.
A Kleinfelder Company

USER NAME = jbegue	DESIGNED - JEB	REVISED -	
	DRAWN - JEB	REVISED -	
PLOT SCALE = 40.0000 ' / in.	CHECKED - RHD	REVISED -	
PLOT DATE = 9/1/2025	DATE - 8/22/2025	REVISED -	

STATE OF ILLINOIS
DEPARTMENT OF TRANSPORTATION
DEPARTMENT OF NATURAL RESOURCES

ROAD CLOSURE & DETOUR SIGNING
2nd STREET OVER HENNEPIN FEEDER CANAL

SCALE: NA | SHEET 2 OF 2 SHEETS | STA. 8+00.00 TO STA. 12+00.00

RTE.	SECTION	COUNTY	TOTAL SHEETS	SHEET NO.
2nd St	HC BRIDGE REPAIR	WHITESIDE	37	13

CONTRACT NO. 46944
ILLINOIS | FED. AID PROJECT

JOB No. 7021-008 VEENSTRA & KIMM, INC. DESIGN FIRM REGISTRATION NUMBER 184.001939

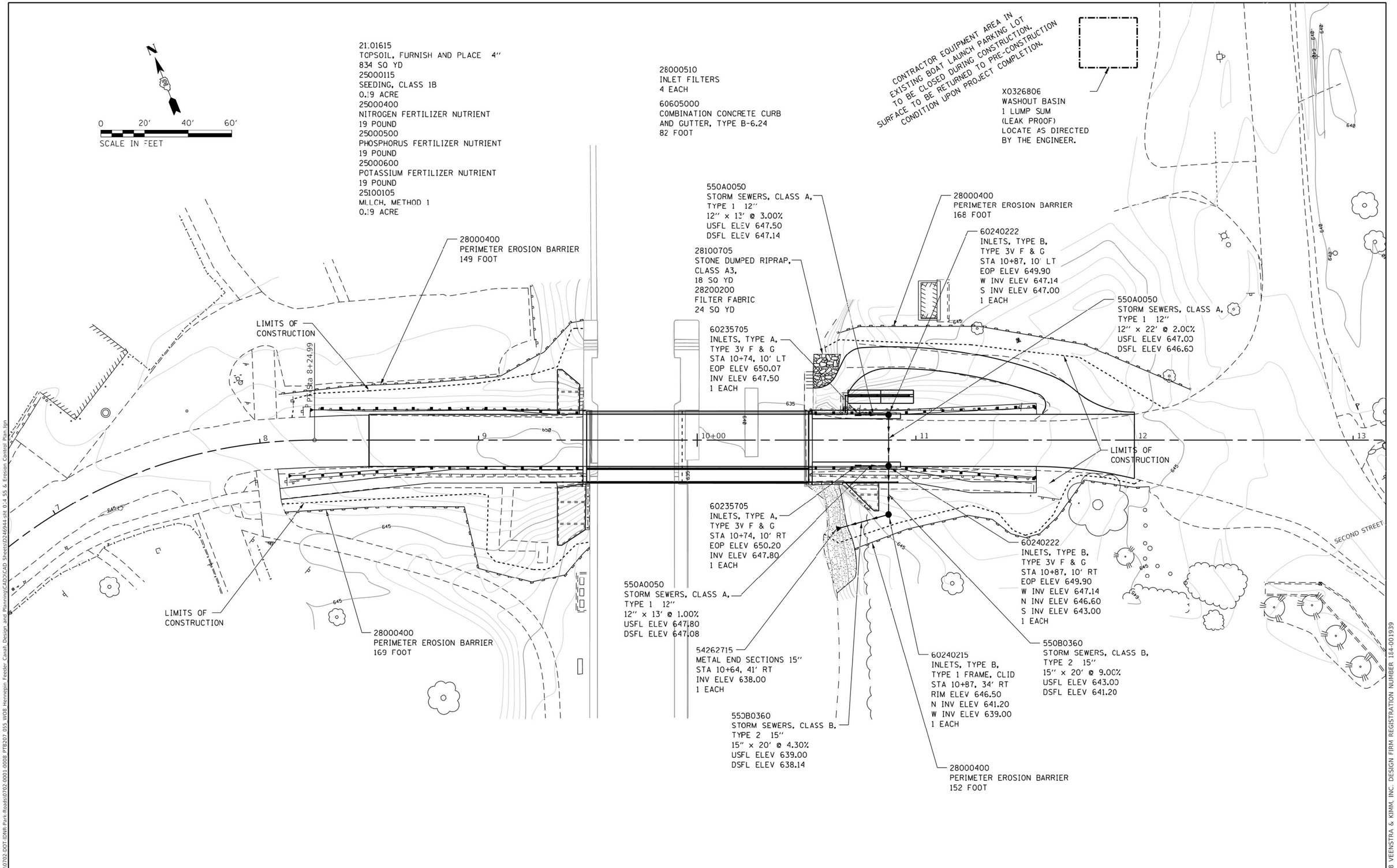

MODEL: Default
FILE NAME: J:\0700\0702-DOT-IDNR-Park-Roads\0702-0001-0008-PTB207-055-W08-Hennepin-Feeder-Canal\Design and Planning\CAD\CAD Sheets\D246944-sht 0-4-SS & Erosion Control Plan.dgn

JOB No. 7021-008 VEENSTRA & KIMM, INC. DESIGN FIRM REGISTRATION NUMBER 184.001939

VEENSTRA & KIMM INC. A Kleinfelder Company	USER NAME = jbegue	DESIGNED - JEB	REVISED -
		DRAWN - JEB	REVISED -
	PLOT SCALE = 40.0000 ' / in.	CHECKED - RHD	REVISED -
	PLOT DATE = 9/3/2025	DATE - 8/22/2025	REVISED -

STATE OF ILLINOIS
DEPARTMENT OF TRANSPORTATION
DEPARTMENT OF NATURAL RESOURCES

STORM SEWER & EROSION CONTROL PLAN
2nd STREET OVER HENNEPIN FEEDER CANAL

SCALE: 1" = 20 | SHEET 1 OF 1 SHEETS | STA. 8+00.00 TO STA. 12+00.00

RTE.	SECTION	COUNTY	TOTAL SHEETS	SHEET NO.
2nd St	HC BRIDGE REPAIR	WHITESIDE	37	14

CONTRACT NO. 46944

ILLINOIS | FED. AID PROJECT

BM #200: Chiseled "□" on Canal Retaining Wall, 2nd Street ℄ Station 9+53.03, 236.80' Right, Elevation 638.160

BM #201: Chiseled "□" on Top of Curb, 2nd Street ℄ Station 10+71.76, 134.26' Left, Elevation 637.800

BM #202: Chiseled "□" on Top of Bridge Deck Curb, 2nd Street ℄ Station 9+44.94, 12.84' Left, Elevation 650.755

Existing Structure: The existing structure is a two span bridge constructed in 1975 as CDB Project 102-220-009B. The existing bridge consists of Precast Prestressed Concrete Deck Beams and measures 104'-9" back to back of abutments and 33'-0" out to out of deck. The deck beams are supported on the walls of the existing Hennepin Feeder Canal Lock and Sluiceways. The bridge is not skewed.

Note: 2nd Street will be closed during Bridge Construction.

Salvage: None

INDEX OF SHEETS

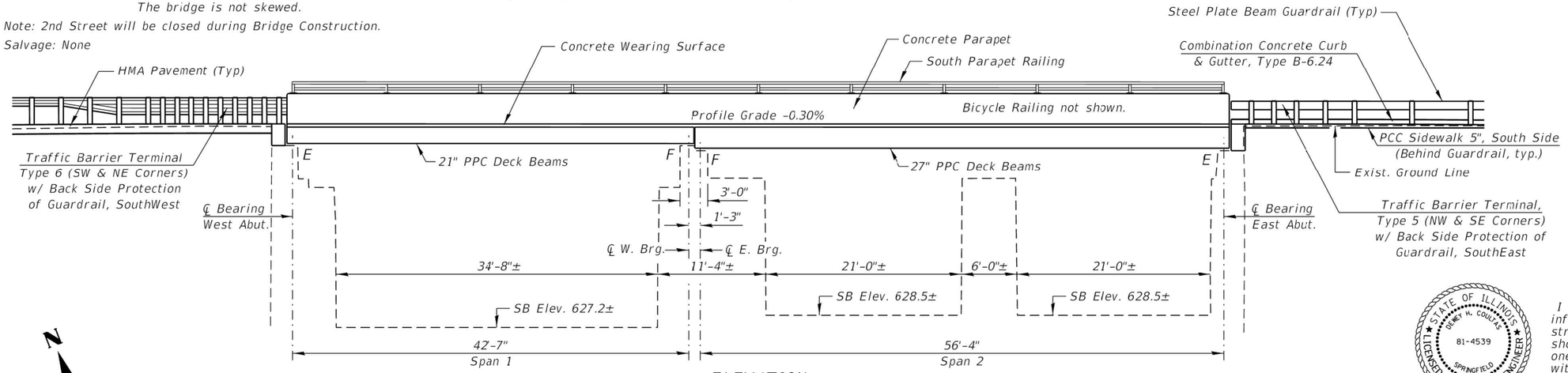

ELEVATION
(Looking Northerly)

I certify that to the best of my knowledge, information and belief, this bridge design is structurally adequate for the design loading shown on the plans. The design is an economical one for the style of structure and complies with requirements of the current "A.A.S.H.T.O. LRFD Bridge Design Specifications".

STATE OF ILLINOIS · DEWEY H. COULTAS · 81-4539 · SPRINGFIELD · LICENSED STRUCTURAL ENGINEER

Dewey H Coultas

Expiration Date 11/30/2026

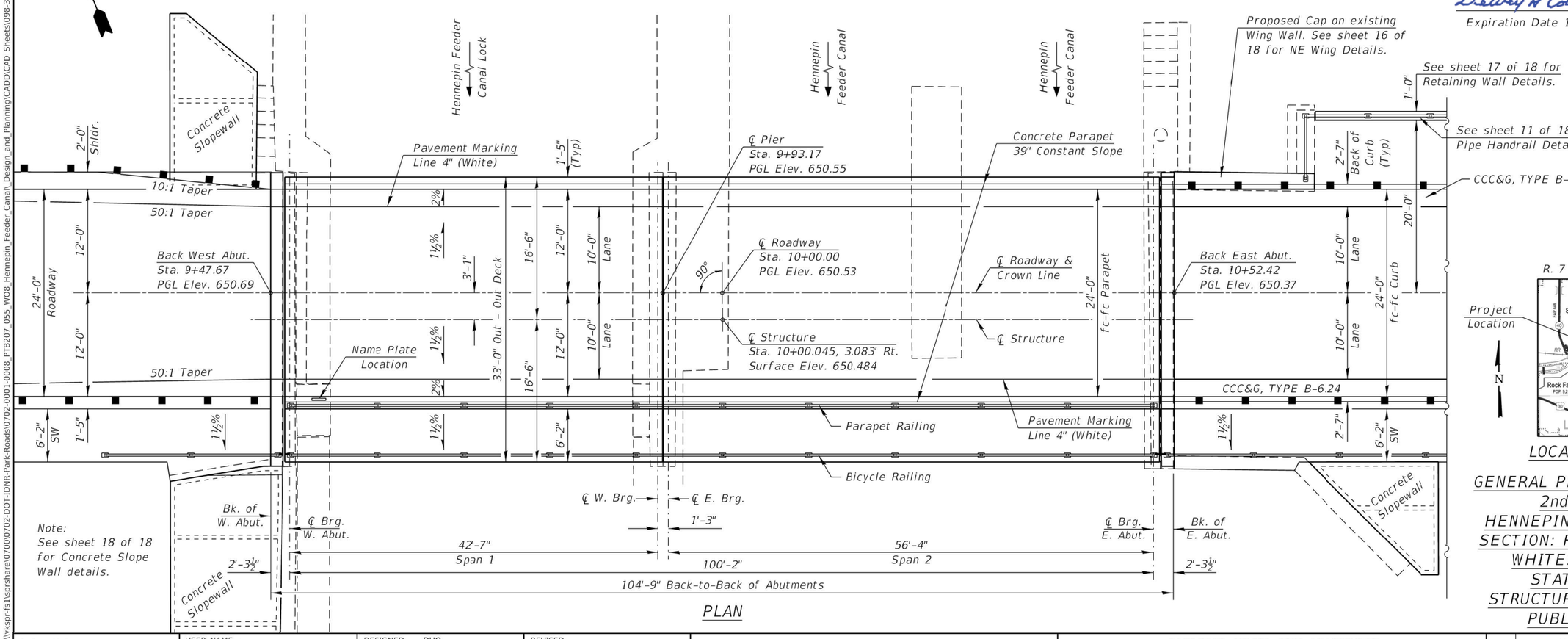

PLAN

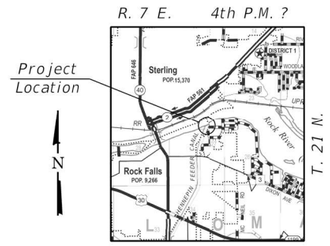

LOCATION SKETCH

GENERAL PLAN & ELEVATION
2nd ST OVER
HENNEPIN FEEDER CANAL
SECTION: ROCK FALLS 2024
WHITESIDE COUNTY
STATION 10+00
STRUCTURE No. 098-3751
PUBLIC WATERS

VEENSTRA & KIMM INC. A Kleinfelder Company

USER NAME =	DESIGNED - DHC	REVISED -	
	CHECKED - MAH	REVISED -	
PLOT SCALE =	DRAWN - JEB	REVISED -	
PLOT DATE = 8/22/2025	CHECKED - MAH/DHC	REVISED -	

STATE OF ILLINOIS
DEPARTMENT OF TRANSPORTATION
DEPARTMENT OF NATURAL RESOURCES

GENERAL PLAN AND ELEVATION
STRUCTURE No. 098-3751

SHEET 1 OF 18 SHEETS

RTE.	SECTION	COUNTY	TOTAL SHEETS	SHEET NO.
2nd St	HC BRIDGE REPAIR	WHITESIDE	37	15
		CONTRACT No. 46944		
		ILLINOIS FED. AID PROJECT		

MODEL: Default
FILE NAME: \\wkspr-fs1\sprshare\07000\702_DOT-IDNR-Park-Roads\0702.0001-0008_PT3207_055_WO8_Hennepin_Feeder_Canal_Design_and_Planning\CADD\CAD Sheets\098-3751 Structure Plans\D246944-sht 015_09837751-001-GP&E.dgn
8/23/2025 10:11:46 PM

JOB No. 7021-008 VEENSTRA & KIMM, INC. DESIGN FIRM REGISTRATION NUMBER 184-001939

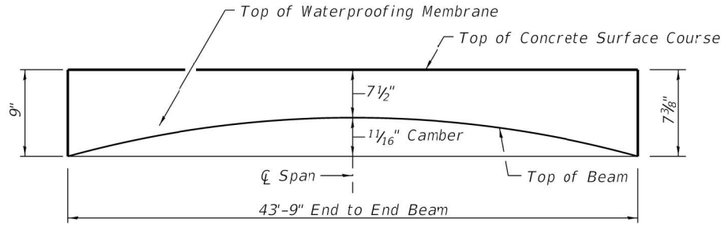

CONCRETE SURFACE COURSE PROFILE & ANTICIPATED CAMBER DIAGRAM (21" BEAM)

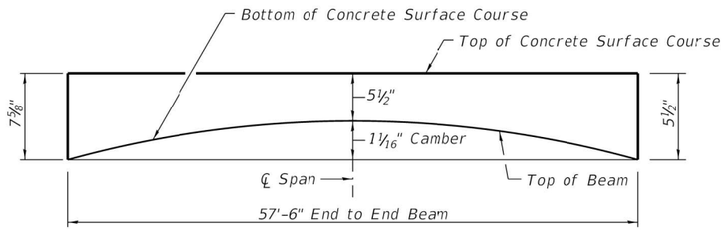

CONCRETE SURFACE COURSE PROFILE & ANTICIPATED CAMBER DIAGRAM (27" BEAM)

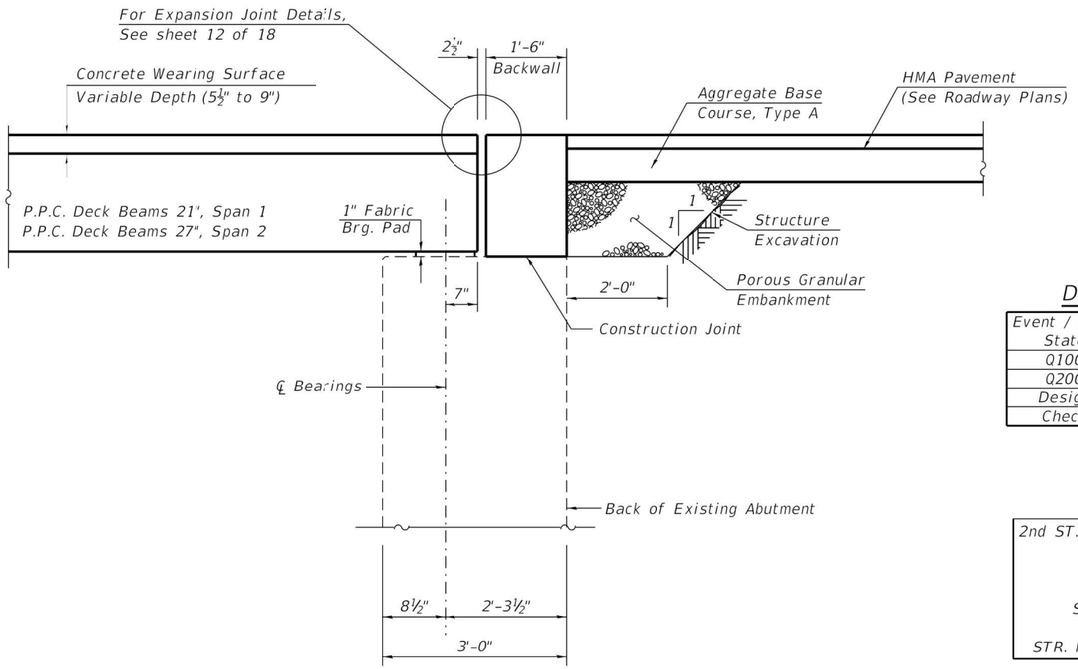

SECTION THRU ABUTMENT

(Horizontal dimensions at Rt. angles)

GENERAL NOTES

Reinforcement bars designated (E) shall be epoxy coated.

Plan dimensions and details relative to the existing structure have been taken from existing plans and are subject to nominal construction variations. The Contractor shall field verify existing dimensions and details affecting new construction and make necessary approved adjustments prior to construction or ordering of materials. Such variations shall not be cause for additional compensation for a change in the scope of work, however, the Contractor will be paid for the quantity actually furnished at the unit price bid for the work.

Existing reinforcement shall be cleaned, straightened and incorporated into new construction. Cost included with Concrete Removal.

Any Existing Name Plates discovered in areas to be removed shall be cleaned and relocated next to new Name Plate. Cost included with Name Plates.

Slipforming of the Parapets is not allowed!

The Contractor shall obtain a construction permit from the Illinois Department of Natural Resources (IDNR), Office of Water Resources for any temporary construction activity placed in the water except cofferdams. This shall include the placement of material for run-arounds, causeways, etc. Any permit application by the Contractor shall refer to the IDNR 3704 Floodway Construction permit number allowing permanent construction as shown in the contract plans.

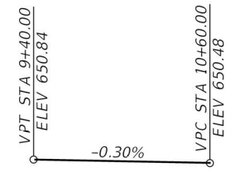

PROFILE GRADE

DESIGN SCOUR ELEVATION TABLE

Event / Limit State	Design Scour Elevations (ft.) W. Abut.	E. Abut.	Item 113
Q100	435.18	435.18	8
Q200	435.18	435.18	
Design	435.18	435.18	
Check	435.18	435.18	

2nd ST. OVER HENNEPIN FEEDER CANAL
REBUILT 20__ BY IDNR
CITY OF ROCK FALLS
WHITESIDE COUNTY
SECTION: ROCK FALLS 2024
STATION 10+00
STR. No. 098-3751 LOADING HL-93

NAME PLATE

IDOT Standard 515001

TOTAL BILL OF MATERIAL

ITEM	UNIT	SUPER	SUB	TOTAL
Porous Granular Embankment	Cu Yd		10	10
Removal of Existing Superstructure	Each	1		1
Concrete Removal	Cu Yd		11.1	11.1
Structure Excavation	Cu Yd		20.4	20.4
Concrete Structures	Cu Yd		33.7	33.7
Concrete Superstructure	Cu Yd	26.3		26.3
Precast Prestressed Concrete Deck Beams (21" Depth)	Sq Ft	1,444		1,444
Precast Prestressed Concrete Deck Beams (27" Depth)	Sq Ft	1,898		1,898
Reinforcement Bars, Epoxy Coated	Pound	11,850	2,380	14,230
Bicycle Railing	Foot	160		160
Parapet Railing	Foot	100		100
Pipe Handrail	Foot	37		37
Name Plates	Each	1		1
Preformed Joint Strip Seal	Foot	66		66
Concrete Wearing Surface (Variable Depth)	Sq Yd	372		372
Structural Repair of Concrete (Depth = or < 5 inches)	Sq Ft		17	17
Asbestos Bearing Pad Removal	Each	44		44

WATERWAY INFORMATION

Drainage Area = 15.13 Sq. Mi. Low Grade Elev. 437.8 @ Sta. 7+50

Flood	Freq. Yr.	Q C.F.S.	Opening Ft² Exist.	Opening Ft² Prop.	Nat. H.W.E.	Head - Ft. Exist.	Head - Ft. Prop.	Headwater El. Exist.	Headwater El. Prop.
	10	52	86	92	435.8	0.0	0.0	435.8	435.8
Design	15	64	91	100	436.1	0.0	0.0	436.1	436.1
Base	100	80	103	122	436.8	0.0	0.0	436.8	436.8
	200	80	105	124	436.8	0.0	0.0	436.8	436.8
Max. Calc.	500	81	109	131	437.0	0.0	0.0	437.0	437.0

LOADING HL 93

Allow 50#/sq. ft. for future wearing surface.

DESIGN SPECIFICATIONS

2020 AASHTO LRFD Bridge Design Specifications, 9th Edition.

DESIGN STRESSES FIELD UNITS

f'c = 3,500 psi
fy = 60,000 psi (Reinforcement)
f'c = 4,000 psi (Parapets & Concrete Wearing Surface)

PRECAST PRESTRESSED UNITS

f'c = 6,000 psi
f'ci = 5,000 psi
fpu = 270,000 psi (½" ∅ low lax strands)
fpbt = 201,960 psi (½" ∅ low lax strands)
fy = 60,000 psi

SEISMIC DATA

2023 AASHTO Seismic Hazard
Site Class D
Latitude 40.507563, Longitude -89.911922
Performance Level Operational

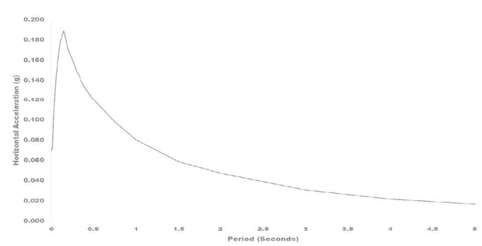

Vertical Acceleration = ⅔ * Horizontal Acceleration
SD1 = 0.085 g
SDS = 0.095 g
SDC = A

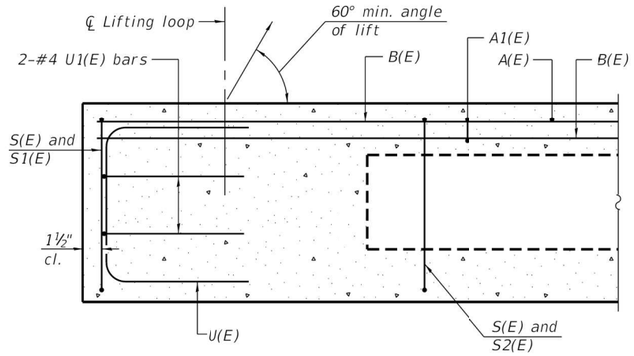

SECTION A-A

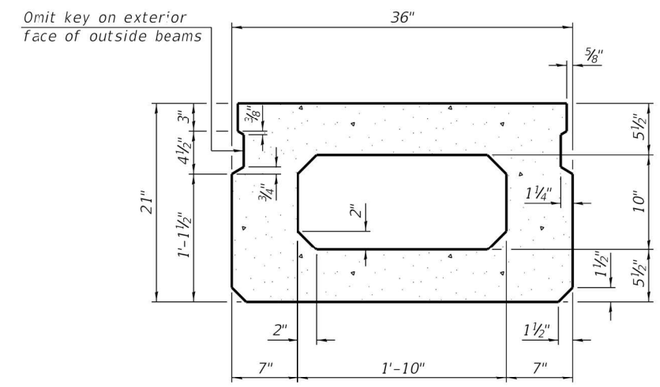

SECTION B-B
(Showing dimensions)

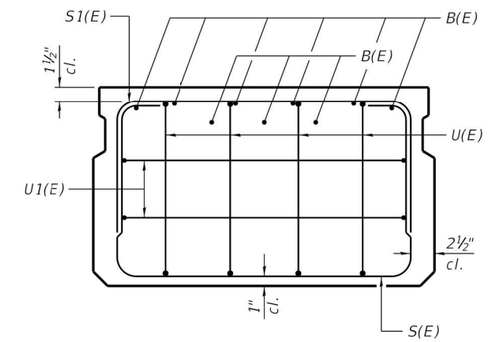

VIEW C-C

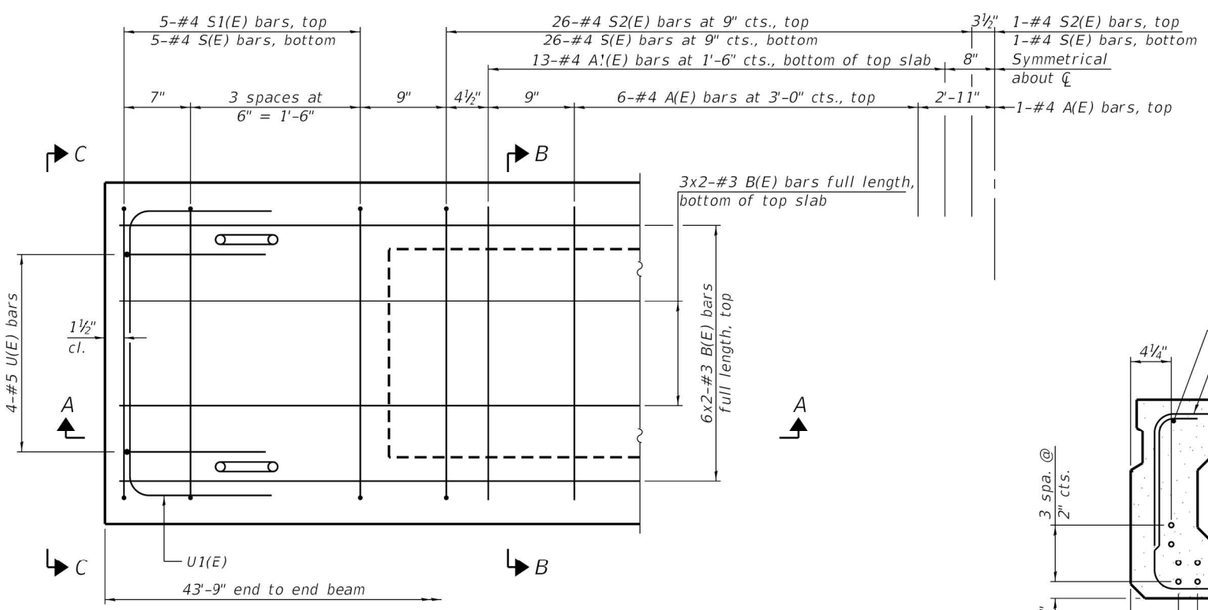

PLAN VIEW

Note:
Spacing of S(E) and S2(E) bars may be adjusted up to 4" in the immediate area of the transverse tie diaphragms to miss the block outs for the transverse ties.
Bars indicated thus 6x2-#3 etc. indicates 6 lines of #3 bars with 2 lengths per line.

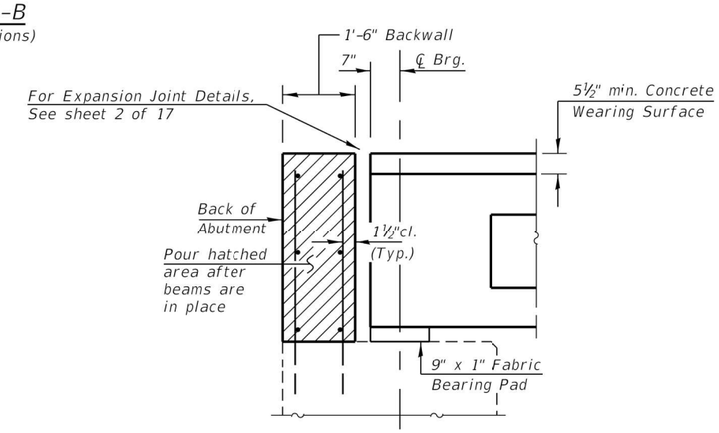

SECTION THRU ABUTMENT

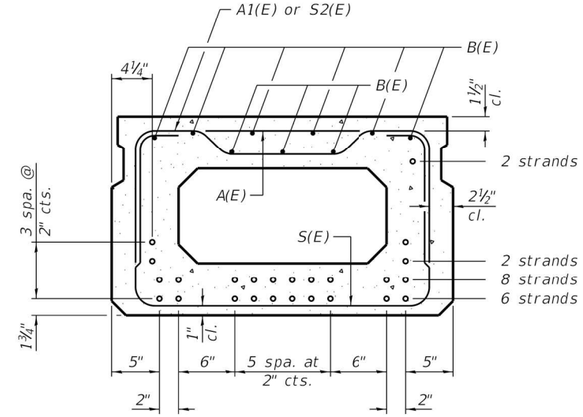

SECTION B-B
(Showing reinforcement and permissible strand locations)

Note:
Place the number of strands specified in each row symmetrically about the centerline of beam in the permissible strand locations shown.

MINIMUM BAR LAP
#3 bar = 1'-6"

BAR LIST
ONE BEAM ONLY
(For information only)

Bar	No.	Size	Length	Shape
A(E)	13	#4	2'-7"	—
A1(E)	26	#4	2'-10"	~
B(E)	18	#3	22'-6"	—
S(E)	62	#4	6'-5"	⊔
S1(E)	10	#4	4'-11"	⊓
S2(E)	52	#4	5'-2"	⊓
U(E)	8	#5	4'-0"	⊂
U1(E)	4	#4	5'-0"	⊓

Note:
See sheet 4 of 18 for additional details and Bill of Material.

PD-2136-0 5-15-2023

VEENSTRA & KIMM INC.
A Kleinfelder Company

USER NAME =	DESIGNED - DHC	REVISED -
	CHECKED - MAH	REVISED -
PLOT SCALE =	DRAWN - JEB	REVISED -
PLOT DATE = 8/22/2025	CHECKED - MAH/DHC	REVISED -

STATE OF ILLINOIS
DEPARTMENT OF TRANSPORTATION
DEPARTMENT OF NATURAL RESOURCES

21" x 36" PPC DECK BEAM (SPAN 1)
STRUCTURE No. 098 - 3751

SHEET 3 OF 18 SHEETS

RTE.	SECTION	COUNTY	TOTAL SHEETS	SHEET NO.
2nd St	HC BRIDGE REPAIR	WHITESIDE	37	17
		CONTRACT No. 46944		
	ILLINOIS	FED. AID PROJECT		

MODEL: Default
FILE NAME: \\vksprshare\0700\0702-DOT-IDNR-Park-Roads\0702-0001-0008_PT3207_055_W08_Hennepin_Feeder_Canal_Design_and_Planning\CADD\CAD Sheets\098-3751 Structure Plans\D246944-sht 017_09837751-003-Deck Beam 21 Inch.dgn
8/23/2025 9:45:50 PM

JOB No. 7021-008 VEENSTRA & KIMM, INC. DESIGN FIRM REGISTRATION NUMBER 184-001939

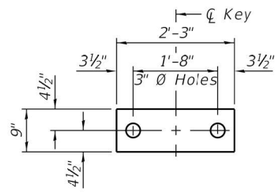

FABRIC BEARING PAD
(Interior)

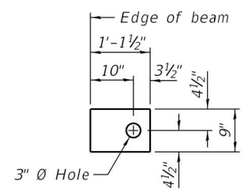

FABRIC BEARING PAD
(Exterior)

FIXED

Notes:
All bearing pads shall be 1" thick.
Omit holes when using expansion bearings.
Expansion bearing pads shall be bonded to the substructure.

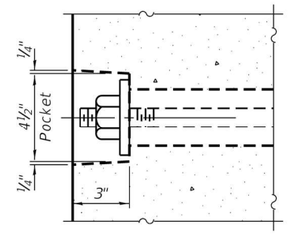

SECTION A-A

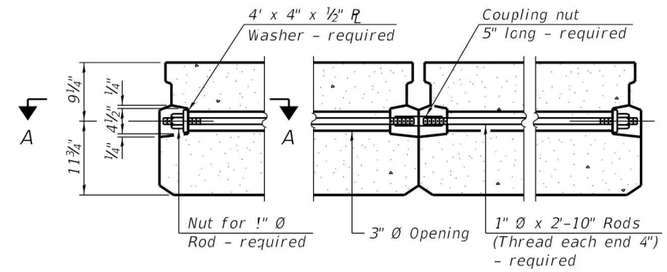

TYPICAL TRANSVERSE TIE ASSEMBLY

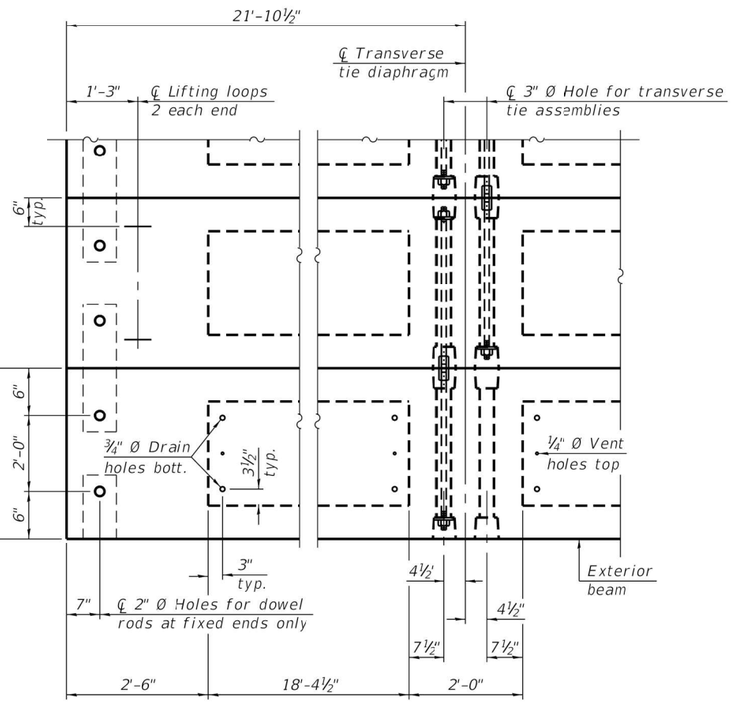

PLAN VIEW

Note:
Connect beams in pairs with the transverse tie configuration shown.

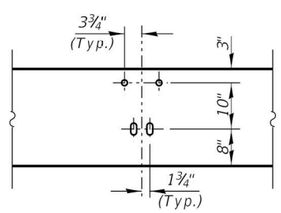

DETAIL A

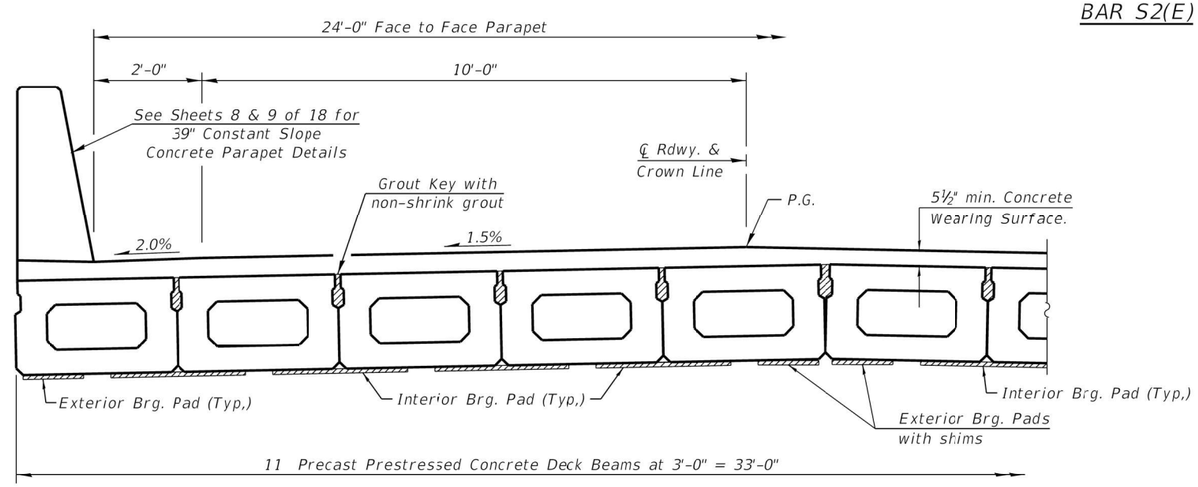

CROSS SECTION
Looking Easterly
See Sheet 7 & 8 of 18 for Superstructure Details.

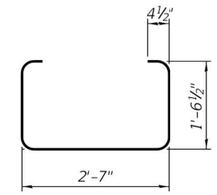

BAR S(E)

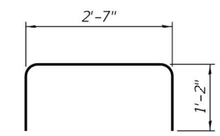

BAR S1(E)

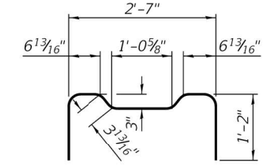

BAR S2(E)

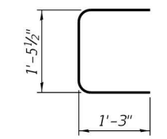

BAR U(E)

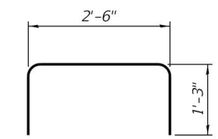

BAR U1(E)

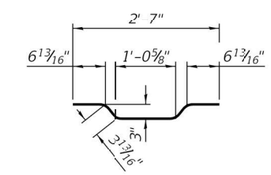

BAR A1(E)

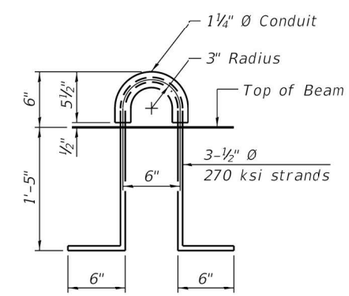

LIFTING LOOP DETAIL

NOTES

Prestressing steel shall be uncoated high strength, low relaxation 7-wire strand, Grade 270. The nominal diameter shall be ½" and the nominal cross-sectional area shall be 0.153 sq. in.

The 1" Ø rods in the transverse tie assembly shall be tightened to a snug fit and the threads set. Pockets on exterior faces of bridge shall be filled with grout after transverse tie assembly is in place.

Two ⅛" fabric adjusting shims of the dimensions of the exterior bearing pad shall be provided for each bearing pad location.

A minimum 2½" Ø lifting pin shall be used to engage the lifting loops during handling.

Corrosion Inhibitor, per Article 1020.05(b)(10) and 1021.07 of the Standard Specifications, shall be used in the concrete for precast prestressed concrete deck beams.

Compressive strength of prestressed concrete, f'c, shall be 6000 psi.

Compressive strength of prestressed concrete at release, f'ci, shall be 5000 psi.

See sheet 9 of 18 for D(E) bars in beams under parapets.

BILL OF MATERIAL

Precast Prestressed Concrete Deck Beams (21" depth)	Sq. Ft.	1444

PDD-2136-0 5-15-2023

VEENSTRA & KIMM INC.
A Kleinfelder Company

USER NAME =	DESIGNED - DHC	REVISED -
	CHECKED - MAH	REVISED -
PLOT SCALE =	DRAWN - JEB	REVISED -
PLOT DATE = 8/22/2025	CHECKED - MAH/DHC	REVISED -

STATE OF ILLINOIS
DEPARTMENT OF TRANSPORTATION
DEPARTMENT OF NATURAL RESOURCES

21" x 36" PPC DECK BEAM DETAILS (SPAN 1)
STRUCTURE No. 098-3751

SHEET 4 OF 18 SHEETS

RTE.	SECTION	COUNTY	TOTAL SHEETS	SHEET NO.
2nd St	HC BRIDGE REPAIR	WHITESIDE	37	18
		CONTRACT No. 46944		
		ILLINOIS FED. AID PROJECT		

MODEL: Default
FILE NAME: \\vkspr-fs1\sprshare\07000\0702-DOT-IDNR-Park-Roads\0702-0001-0008_PT3207_055_W08_Hennepin_Feeder_Canal_Design_and_Planning\CADD\CAD Sheets\098-3751 Structure Plans\D246944-sht 018_09837751-004-Deck Beam 21 Details.dgn
8/23/2025 9:47:00 PM

JOB No. 7021-008 VEENSTRA & KIMM, INC. DESIGN FIRM REGISTRATION NUMBER 184-001939

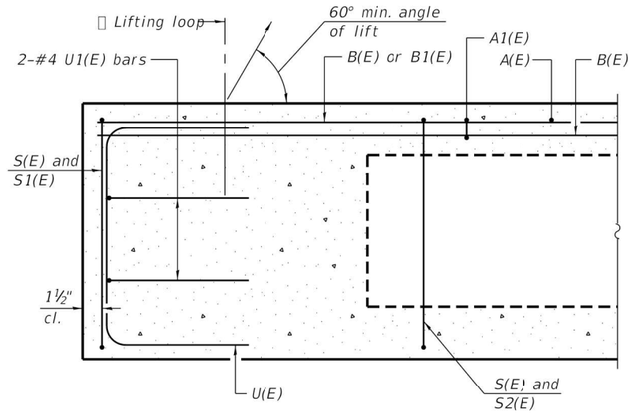

SECTION A-A

MINIMUM BAR LAP

#3 bar = 1'-6"

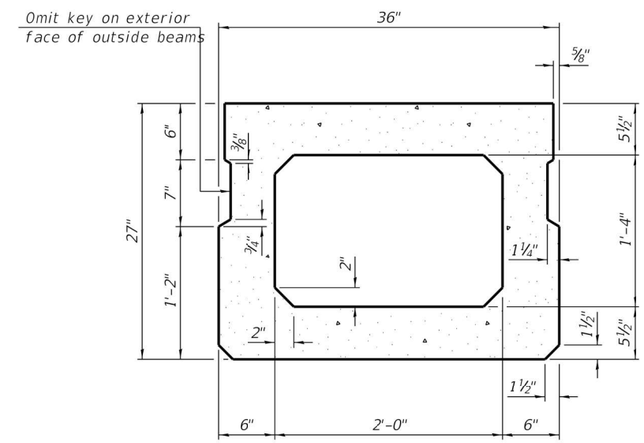

SECTION B-B

(Showing dimensions)

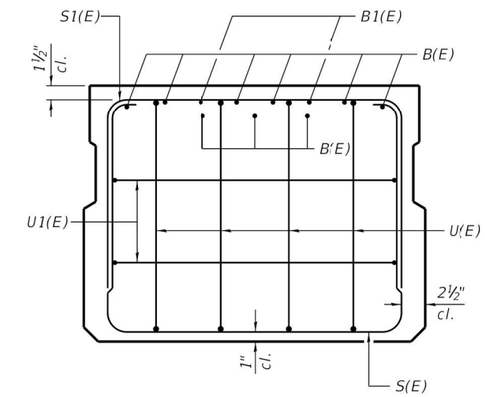

VIEW C-C

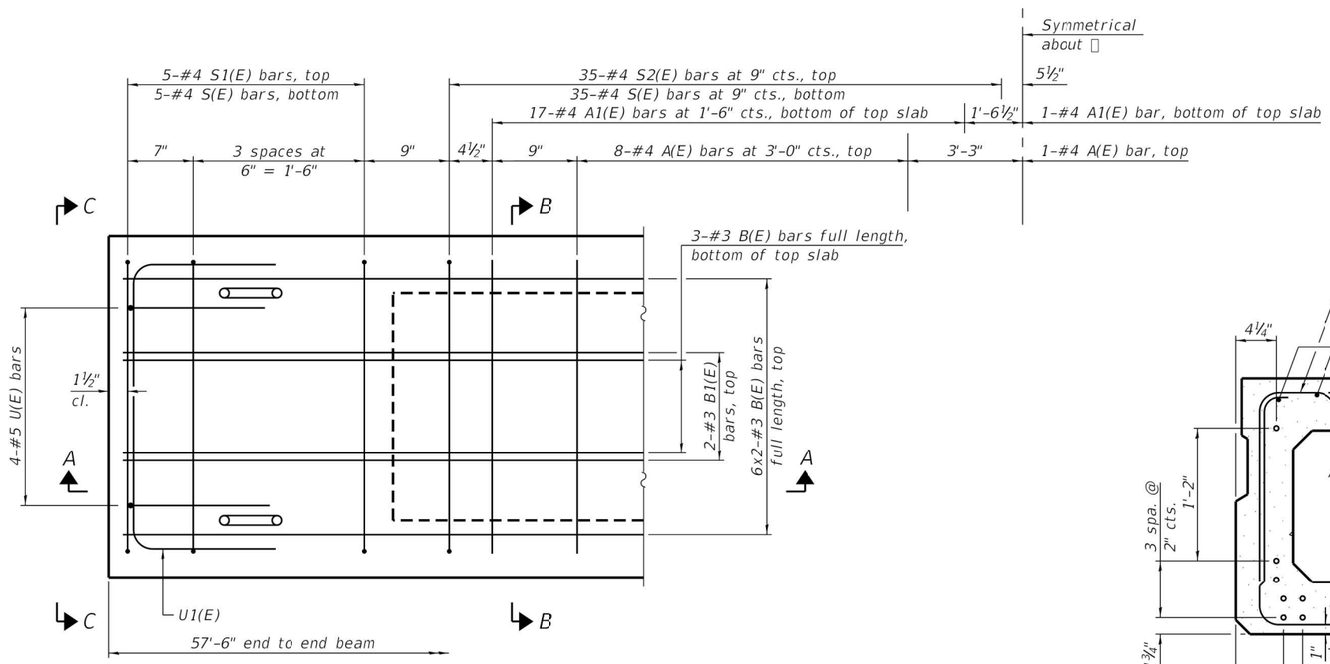

PLAN VIEW

Note:
Spacing of S(E) and S2(E) bars may be adjusted up to 4" in the immediate area of the transverse tie diaphragms to miss the block outs for the transverse ties.

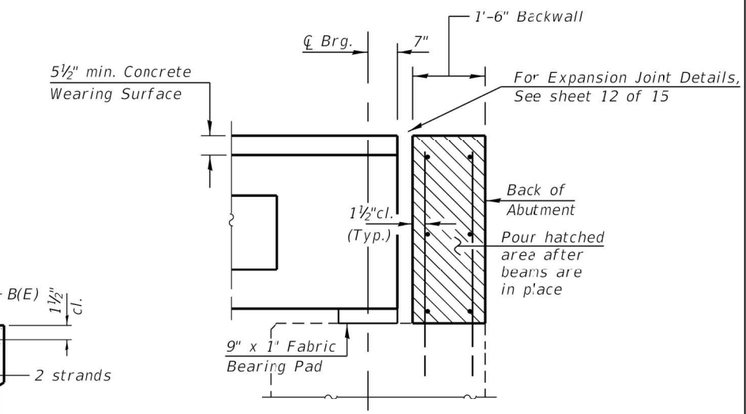

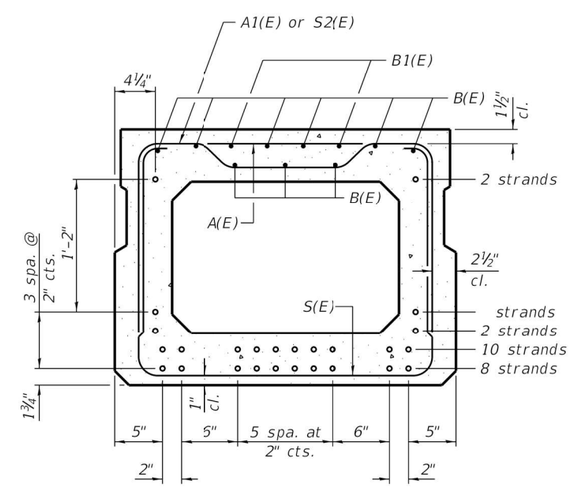

SECTION B-B

(Showing reinforcement and permissible strand locations)

Note:
Place the number of strands specified in each row symmetrically about the centerline of beam in the permissible strand locations shown.

BAR LIST

ONE BEAM ONLY

(For information only)

Bar	No.	Size	Length	Shape
A(E)	17	#4	2'-7"	
A1(E)	35	#4	2'-10"	
B(E)	12	#3	29'-4"	
B1(E)	4	#3	10'-0"	
S(E)	80	#4	7'-5"	
S1(E)	10	#4	5'-11"	
S2(E)	70	#4	6'-2"	
U(E)	8	#5	4'-6"	
U1(E)	4	#4	5'-0"	

Note:
See sheet 6 of 18 for additional details and Bill of Material.

PD-2736-0 5-15-2023

VEENSTRA & KIMM INC. A Kleinfelder Company

USER NAME =	DESIGNED - DHC	REVISED -	
	CHECKED - MAH	REVISED -	
PLOT SCALE =	DRAWN - JEB	REVISED -	
PLOT DATE = 8/22/2025	CHECKED - MAH/DHC	REVISED -	

STATE OF ILLINOIS
DEPARTMENT OF TRANSPORTATION
DEPARTMENT OF NATURAL RESOURCES

27" x 36" PPC DECK BEAM (SPAN 2)
STRUCTURE No. 098-3751

SHEET 5 OF 18 SHEETS

RTE.	SECTION	COUNTY	TOTAL SHEETS	SHEET NO.
2nd St	HC BRIDGE REPAIR	WHITESIDE	37	19
		CONTRACT No. 46944		
		ILLINOIS FED. AID PROJECT		

MODEL: Default
FILE NAME: \\kspr-fs1\sprshare\0700\0702 DOT-IDNR-Park-Roads\0702-0001-0008_PT3207_055_WO8_Hennepin_Feeder_Canal_Design_and_Planning\CADD\CAD Sheets\098-3751 Structure Plans\D246944-sht 019_0983751-005-Deck Beam 27 Inch.dgn
8/23/2025 9:47:59 PM

JOB No. 7021-008 VEENSTRA & KIMM, INC. DESIGN FIRM REGISTRATION NUMBER 184-001939

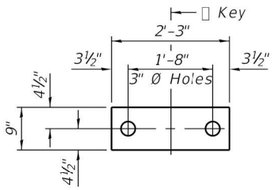

FABRIC BEARING PAD
(Interior)

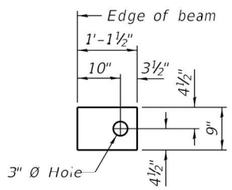

FABRIC BEARING PAD
(Exterior)

FIXED

Notes:
All bearing pads shall be 1" thick.
Omit holes when using expansion bearings.
Expansion bearing pads shall be bonded to the substructure.

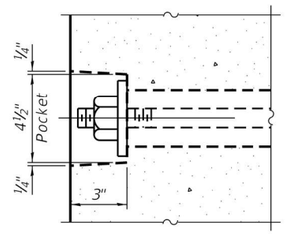

SECTION A-A

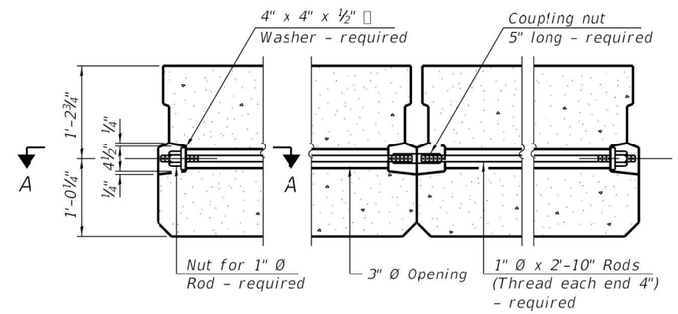

TYPICAL TRANSVERSE TIE ASSEMBLY

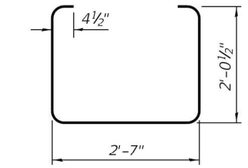

BAR S(E)

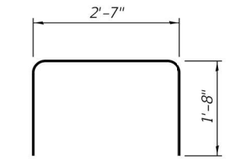

BAR S1(E)

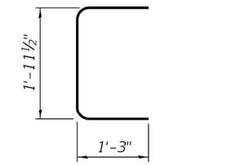

BAR U(E)

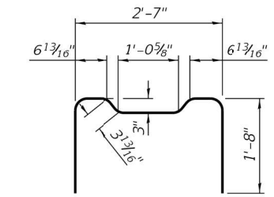

BAR S2(E)

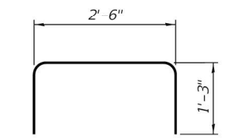

BAR U1(E)

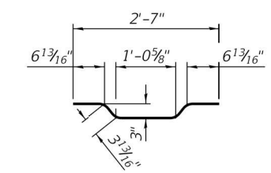

BAR A1(E)

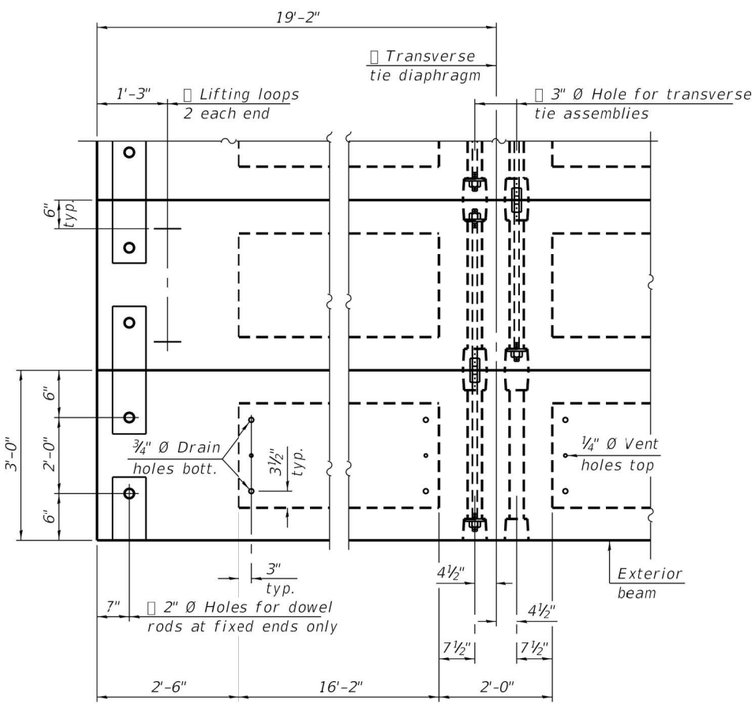

PLAN VIEW

Note:
Connect beams in pairs with the transverse tie configuration shown.

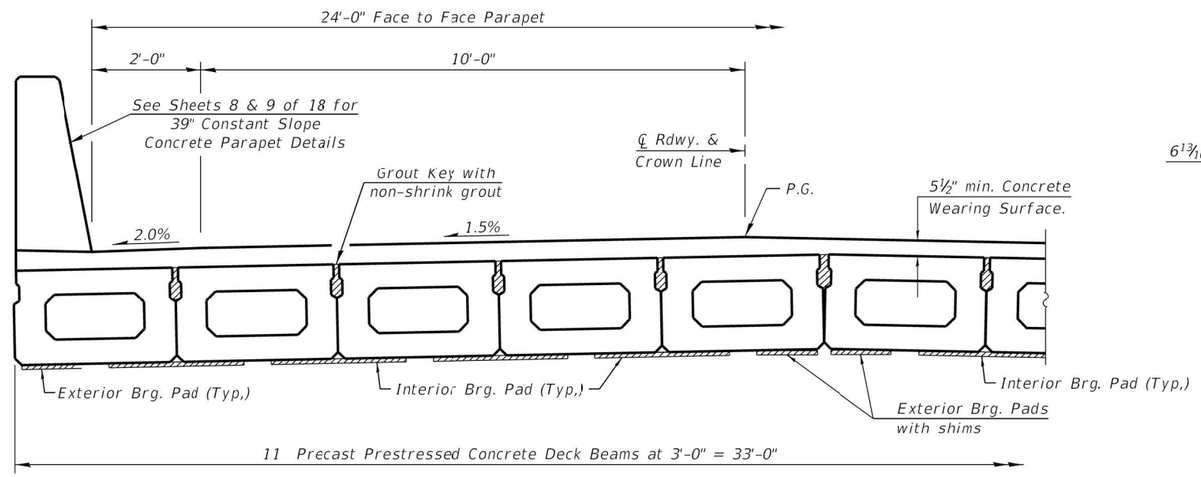

CROSS SECTION
Looking Easterly
See Sheet 7 & 8 of 18 for Superstructure Details.

NOTES

Prestressing steel shall be uncoated high strength, low relaxation 7-wire strand, Grade 270. The nominal diameter shall be ½" and the nominal cross-sectional area shall be 0.153 sq. in.

The 1" Ø rods in the transverse tie assembly shall be tightened to a snug fit and the threads set. Pockets on exterior faces of bridge shall be filled with grout after transverse tie assembly is in place.

Two ⅛" fabric adjusting shims of the dimensions of the exterior bearing pad shall be provided for each bearing pad location.

A minimum 2½" Ø lifting pin shall be used to engage the lifting loops during handling.

Corrosion Inhibitor, per Article 1020.05(b)(10) and 1021.07 of the Standard Specifications, shall be used in the concrete for precast prestressed concrete deck beams.

Compressive strength of prestressed concrete, f 'c, shall be 6000 psi.

Compressive strength of prestressed concrete at release, f 'ci, shall be 5000 psi.

See sheet 9 of 18 for D(E) bars in beams under parapets.

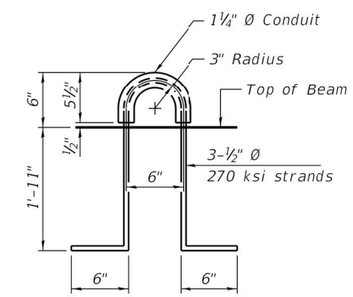

LIFTING LOOP DETAIL

BILL OF MATERIAL

Precast Prestressed Conc. Deck Bms. (27" depth)	Sq. Ft.	1898

PDD-2736-0 5-15-2023

VEENSTRA & KIMM INC.
A Kleinfelder Company

USER NAME =	DESIGNED - DHC	REVISED -	
	CHECKED - MAH	REVISED -	
PLOT SCALE =	DRAWN - JEB	REVISED -	
PLOT DATE = 8/22/2025	CHECKED - MAH/DHC	REVISED -	

STATE OF ILLINOIS
DEPARTMENT OF TRANSPORTATION
DEPARTMENT OF NATURAL RESOURCES

27" x 36" PPC DECK BEAM DETAILS (SPAN 2)
STRUCTURE No. 098-3751

SHEET 6 OF 18 SHEETS

RTE.	SECTION	COUNTY	TOTAL SHEETS	SHEET NO.
2nd St	HC BRIDGE REPAIR	WHITESIDE	37	20
		CONTRACT No. 46944		
		ILLINOIS FED. AID PROJECT		

MODEL: Default
FILE NAME: \\kspr-fs1\sprshare\07000702_DOT-IDNR-Park-Roads\0702-0001-0008_PT3207_055_WO8_Hennepin_Feeder_Canal_Design_and_Planning\CADD\CAD Sheets\098-3751 Structure Plans\D246944-sht 020_09837751-006-Deck Beam 27 Details.dgn
8/23/2025 9:49:07 PM

JOB No. 7021-008 VEENSTRA & KIMM, INC. DESIGN FIRM REGISTRATION NUMBER 184-001939

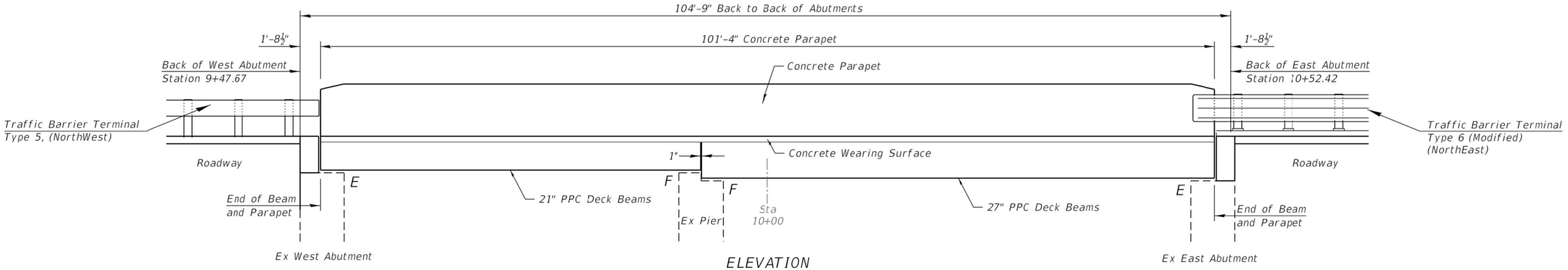

ELEVATION

Concrete Parapet (Looking Northerly)
Showing Inside Face of North Parapet
Note: See Sheets 8 & 9 of 18 for concrete parapet details.

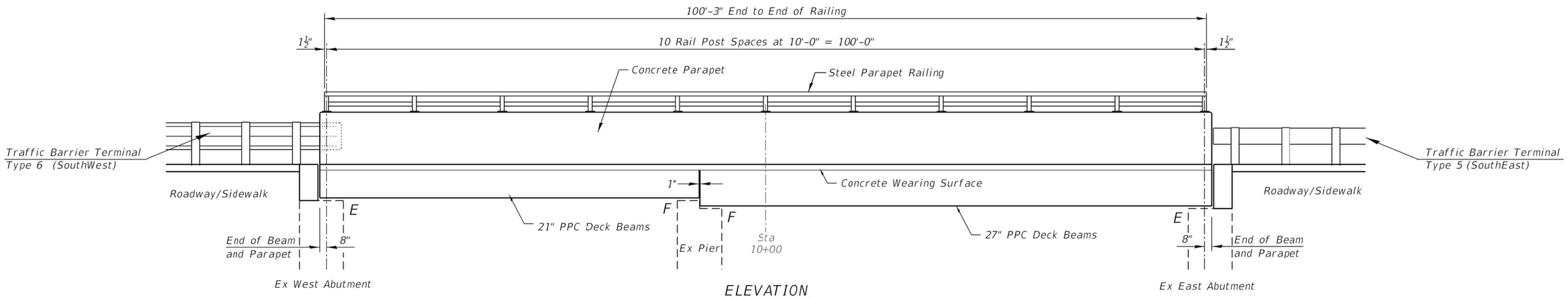

ELEVATION

Parapet Railing (Looking Northerly)
Showing Rail Post Spaces and Back Wall of South Parapet
Note: See Sheet 10 of 18 for steel railing details.

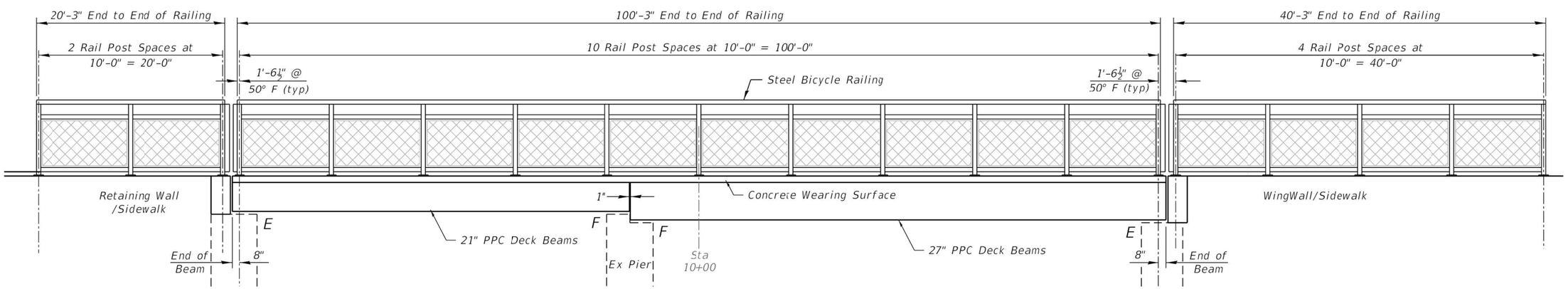

ELEVATION

Bicycle Railing (Looking Northerly)
Showing Rail Post Spaces
Note: See Sheet 10 of 18 for steel railing details.

MODEL: Default
FILE NAME: \\vkspr-fs1\sprshare\0700\0702-DOT-IDNR-Park-Roads\0702-0001-0008_PT3207_055_W08_Hennepin_Feeder_Canal_Design_and_Planning\CADD\CAD Sheets\098-3751 Structure Plans\D246944-sht 021_09837751-007-Superstructure.dgn

VEENSTRA & KIMM INC. A Kleinfelder Company	USER NAME =	DESIGNED - DHC	REVISED -	STATE OF ILLINOIS DEPARTMENT OF TRANSPORTATION DEPARTMENT OF NATURAL RESOURCES	SUPERSTRUCTURE STRUCTURE No. 098-3751
		CHECKED - MAH	REVISED -		
	PLOT SCALE =	DRAWN - JEB	REVISED -		
	PLOT DATE = 8/22/2025	CHECKED - MAH/DHC	REVISED -		SHEET 7 OF 18 SHEETS

RTE.	SECTION	COUNTY	TOTAL SHEETS	SHEET NO.
2nd St	HC BRIDGE REPAIR	WHITESIDE	37	21
		CONTRACT No. 46944		
	ILLINOIS	FED. AID PROJECT		

JOB No. 7021-008 VEENSTRA & KIMM, INC. DESIGN FIRM REGISTRATION NUMBER 184-001939

8/23/2025 10:53:30 PM

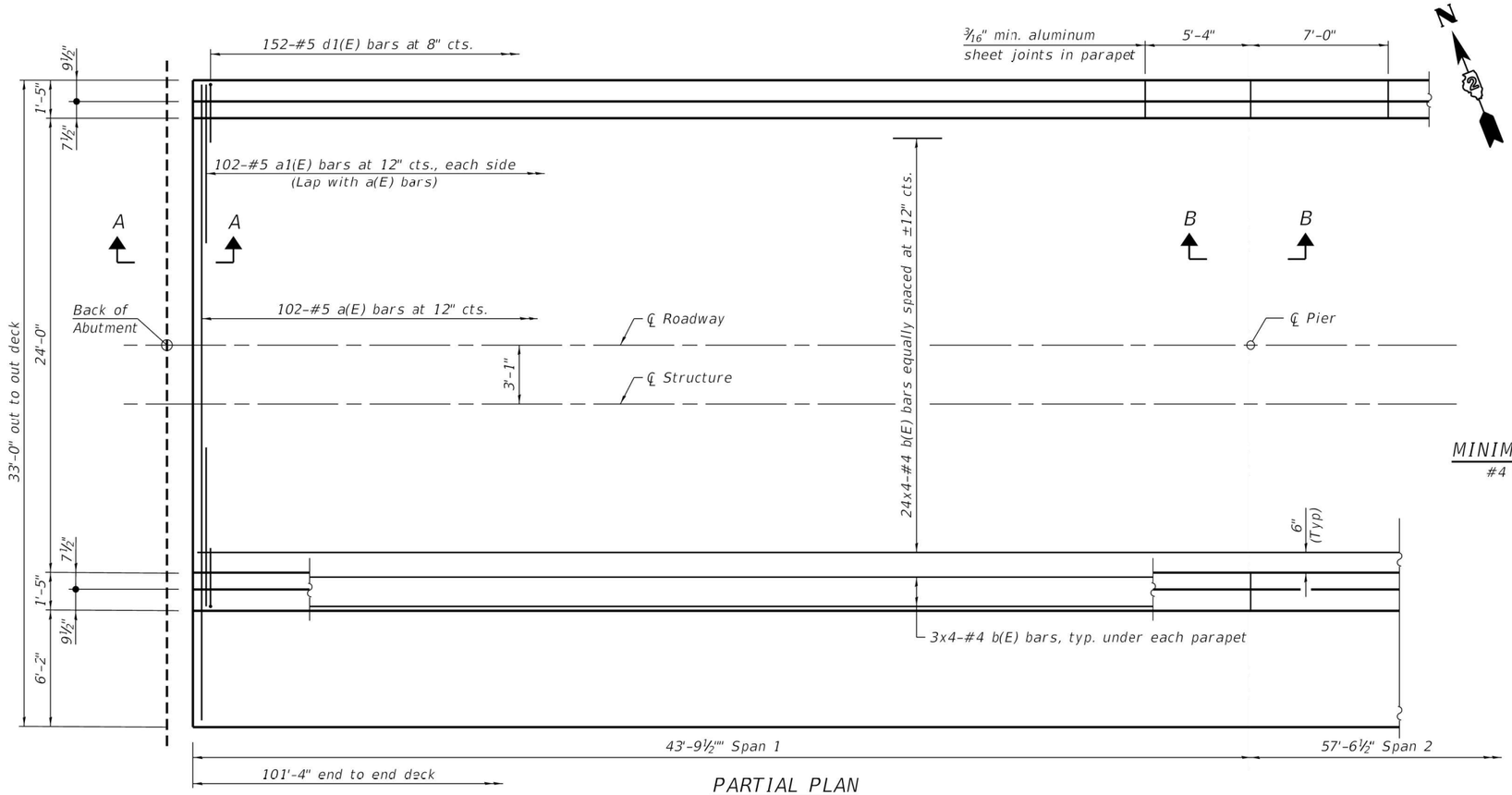

PARTIAL PLAN

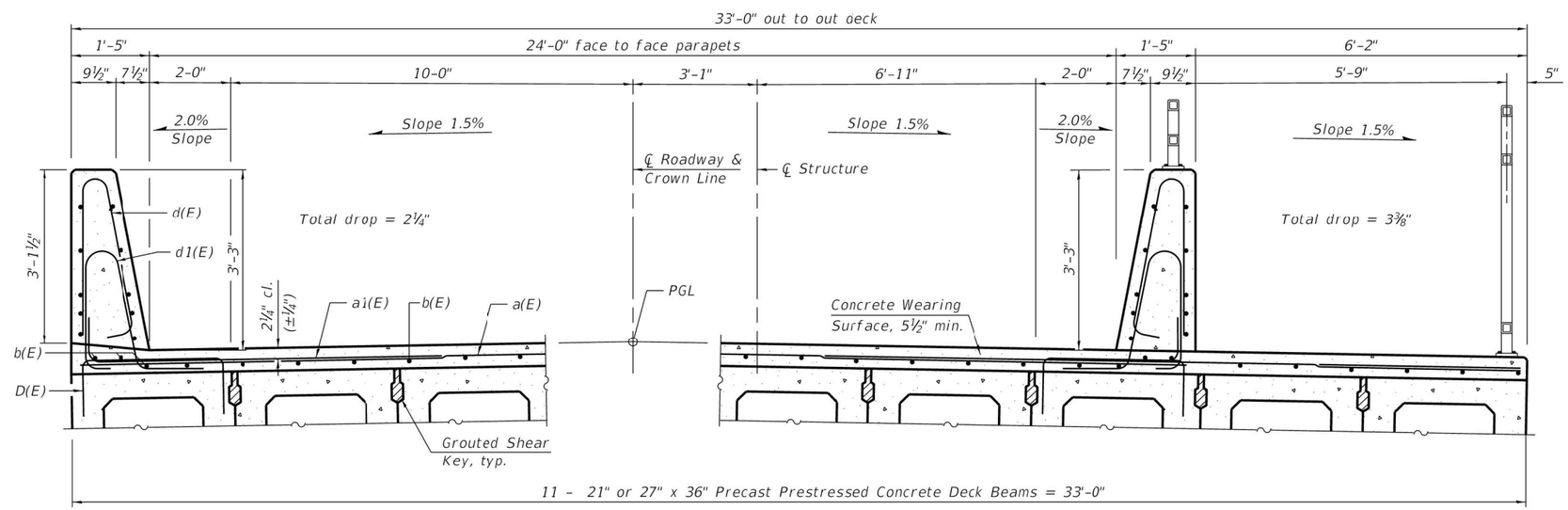

CROSS SECTION

(Looking Easterly)

MINIMUM BAR LAP

#4 bar = 1'-7"

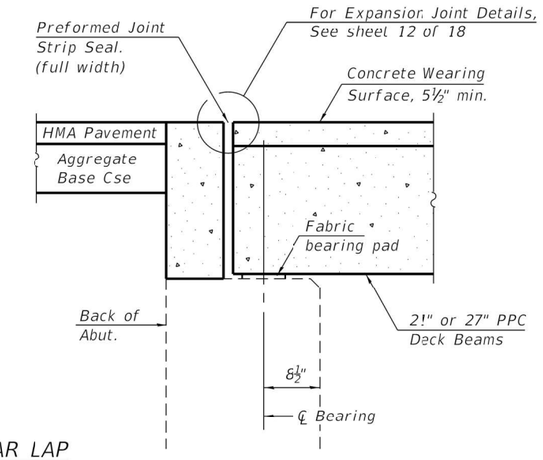

SECTION A-A

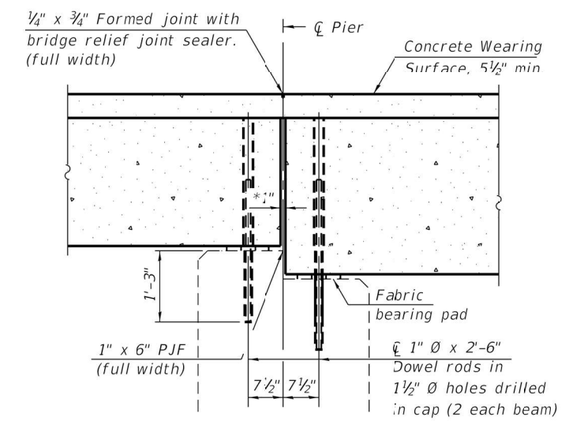

SECTION B-B

*1" Jt. shall be filled with non-shrink grout. 1" dimension may vary to accommodate tolerance in beam lengths.

Notes:

See sheet 9 of 18 for Concrete Parapet Details and Bill of Material.

Bars indicated thus 20x2-#4 etc. indicates 20 lines of #4 bars with 2 lengths per line.

Concrete wearing surface shall be placed prior to casting approach slab.

See sheets 4 & 6 of 18 for fabric bearing pad details.

MODEL: Default
FILE NAME: \\vksprshare\0700\0702-DOT-IDNR-Park-Roads\0702-0001-0008_PT3207_055_WO8_Hennepin_Feeder_Canal_Design_and_Planning\CADD\CAD Sheets\098-3751 Structure Plans\D246944-sht 022_0983751-008 Superstructure Details.dgn

JOB No. 7021-008 VEENSTRA & KIMM, INC. DESIGN FIRM REGISTRATION NUMBER 184-001939

VEENSTRA & KIMM INC. A Kleinfelder Company	USER NAME =	DESIGNED - DHC	REVISED -	STATE OF ILLINOIS DEPARTMENT OF TRANSPORTATION DEPARTMENT OF NATURAL RESOURCES	SUPERSTRUCTURE DETAILS STRUCTURE No. 098-3751	RTE.	SECTION	COUNTY	TOTAL SHEETS	SHEET NO.
		CHECKED - MAH	REVISED -			2nd St	HC BRIDGE REPAIR	WHITESIDE	37	22
	PLOT SCALE =	DRAWN - JEB	REVISED -					CONTRACT No. 46944		
	PLOT DATE = 8/22/2025	CHECKED - MAH/DHC	REVISED -		SHEET 8 OF 18 SHEETS		ILLINOIS	FED. AID PROJECT		

8/23/2025 9:50:57 PM

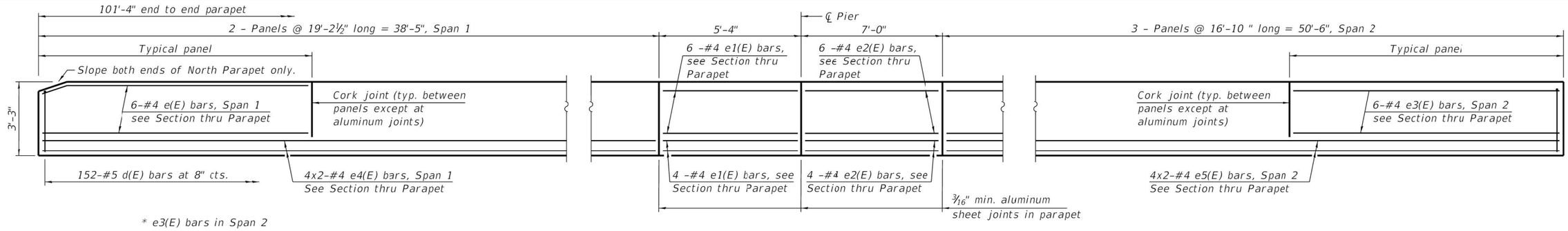

INSIDE ELEVATION OF PARAPET

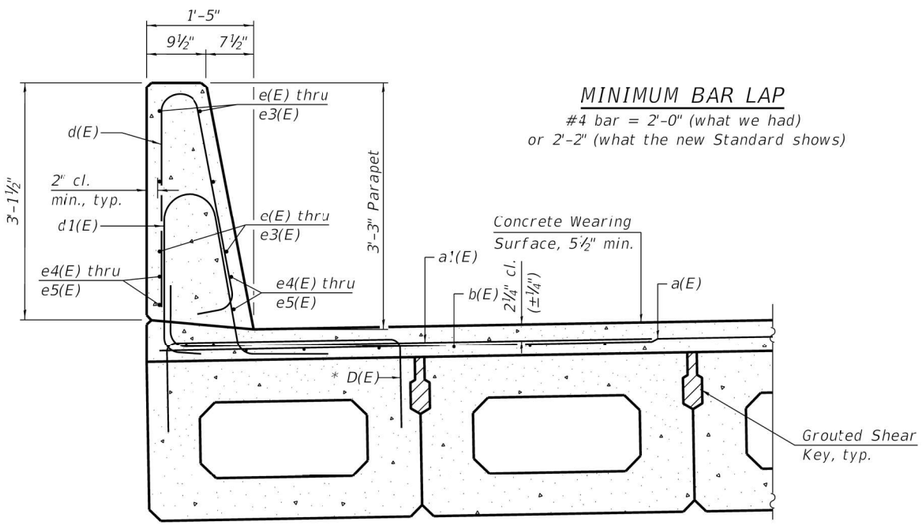

MINIMUM BAR LAP

#4 bar = 2'-0" (what we had)
or 2'-2" (what the new Standard shows)

SECTION THRU PARAPET

* Place #4 D(E) bars in beams under parapets at 9" cts. along the skew projecting 3" above beam. D(E) bars included in cost of beam.

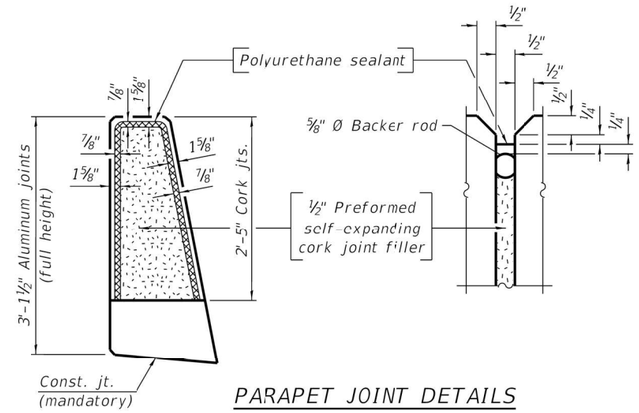

PARAPET JOINT DETAILS

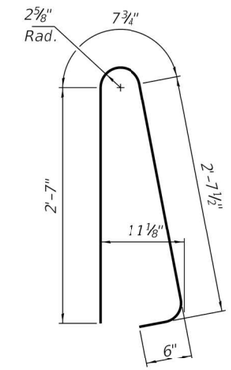

BAR d(E)

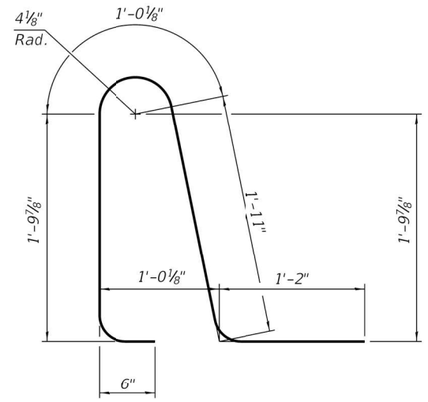

BAR d1(E)

Note:
The 3/16" min. aluminum sheet shall be ASTM B 209 alloy 3003-H14 and coated with 5 mils of either bitumen paint or epoxy paint to minimize reaction with wet concrete. Cost included with Concrete Superstructure.
The Polyurethane Sealant shall be according to Article 1050.04 of the Std. Spec. and the color shall be gray.
Parapet concrete shall be paid for as Concrete Superstructure.

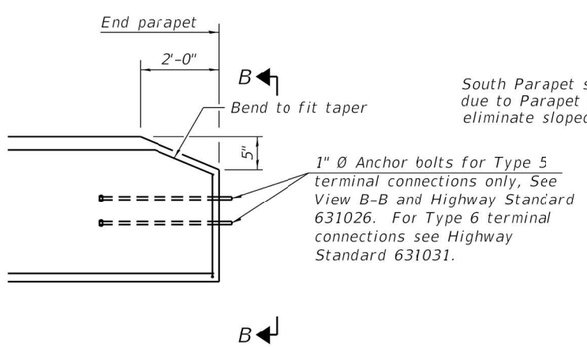

South Parapet similar, due to Parapet Railing eliminate sloped ends.

INSIDE ELEVATION OF NORTH PARAPET

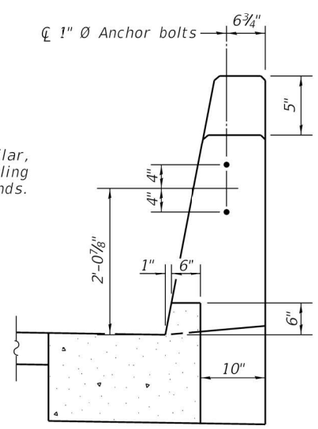

VIEW B-B

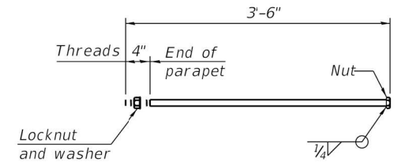

*1" Ø ANCHOR BOLT

(Anchor bolt assemblies shall be galvanized according to Article 1006.09 of the Standard Specifications)

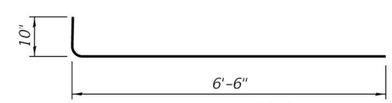

BAR a1(E)

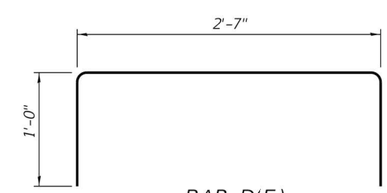

BAR D(E)

SUPERSTRUCTURE BILL OF MATERIAL

Bar	No.	Size	Length	Shape
a(E)	102	#5	32'-8"	
a1(E)	204	#5	7'-4"	
b(E)	120	#4	26'-6"	
d(E)	304	#5	6'-5"	
d1(E)	304	#5	6'-3"	
e(E)	12	#4	18'-11	
e1(E)	10	#4	5'-0"	
e2(E)	10	#4	6'-8"	
e3(E)	18	#4	16-6"	
e4(E)	8	#4	20'-1"	
e5(E)	8	#4	26'-1"	
Reinforcement Bars, Epoxy Coated			Pound	11,850
Concrete Superstructure			Cu. Yd.	26.3
Conc. Wearing Surf. (Variable Depth)			Sq. Yd.	372

Bars indicated thus: 4x2-#4 etc. indicates 4 lines of #4 bars with 2 lengths per line.

VEENSTRA & KIMM INC.
A Kleinfelder Company

USER NAME =	DESIGNED - DHC	REVISED -	
	CHECKED - MAH	REVISED -	
PLOT SCALE =	DRAWN - JEB	REVISED -	
PLOT DATE = 8/22/2025	CHECKED - MAH/DHC	REVISED -	

STATE OF ILLINOIS
DEPARTMENT OF TRANSPORTATION
DEPARTMENT OF NATURAL RESOURCES

CONCRETE PARAPET DETAILS
STRUCTURE No. 098-3751

SHEET 9 OF 18 SHEETS

RTE.	SECTION	COUNTY	TOTAL SHEETS	SHEET NO.
2nd St	HC BRIDGE REPAIR	WHITESIDE	37	23
		CONTRACT No. 46944		
		ILLINOIS FED. AID PROJECT		

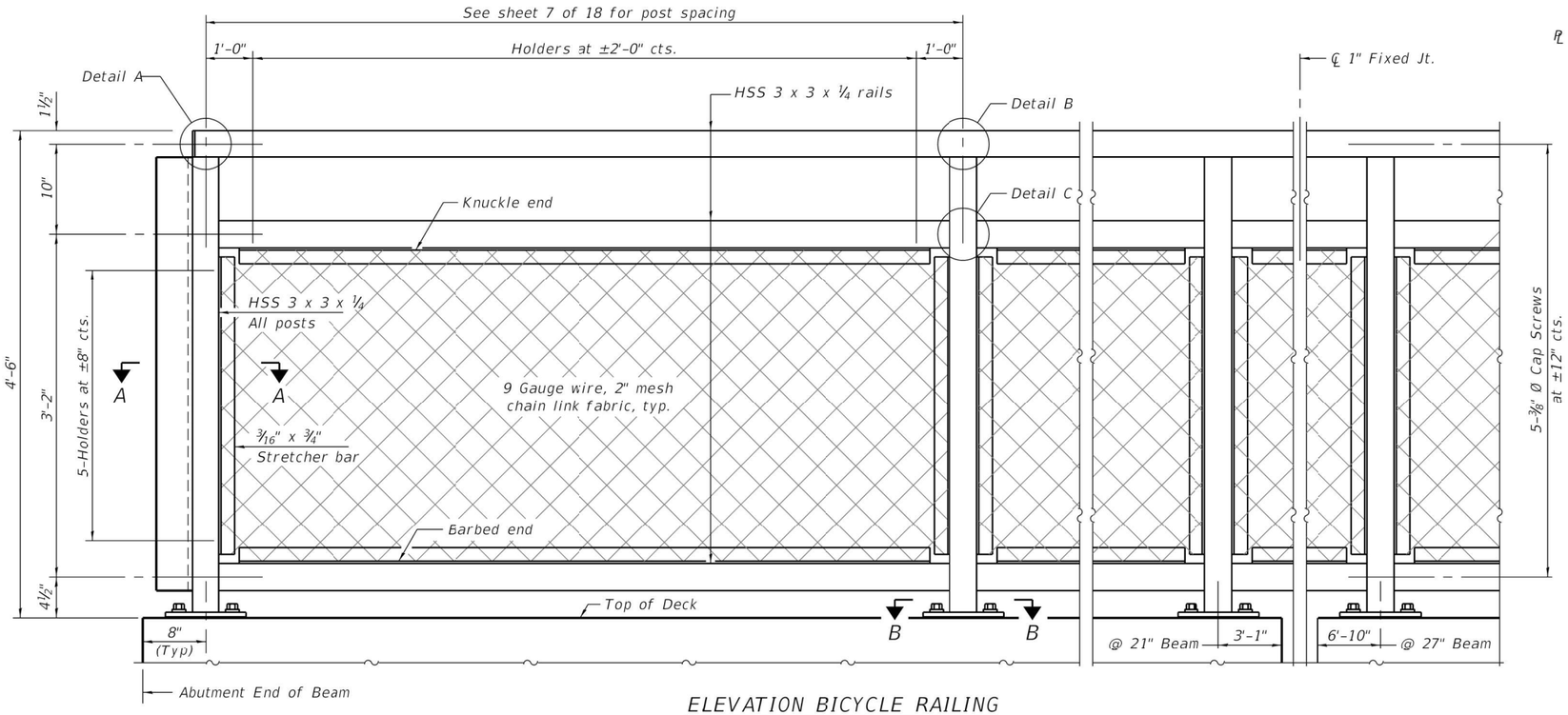

ELEVATION BICYCLE RAILING

Showing Railing on Bridge Deck
Railing on Sidewalk similar
(Inside face)

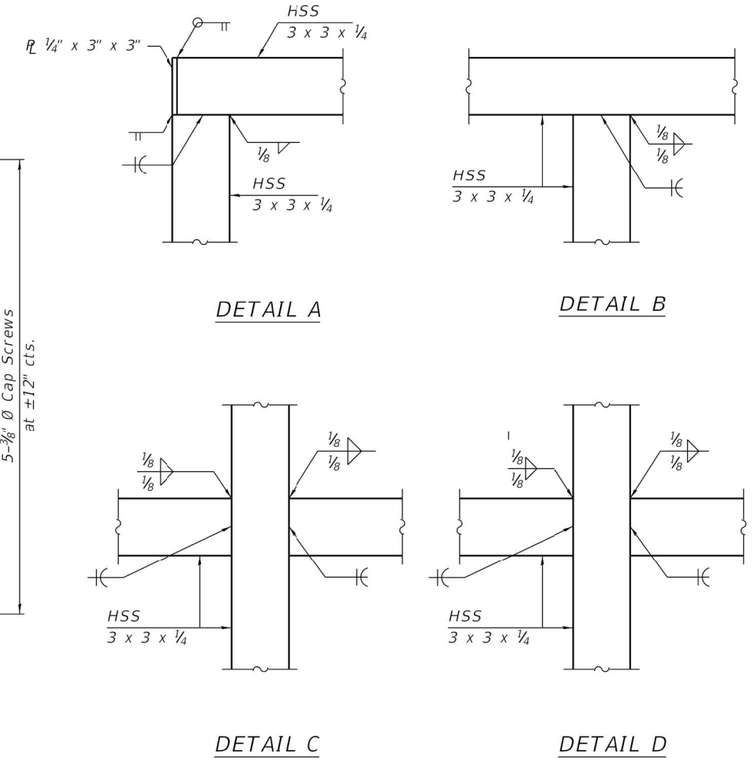

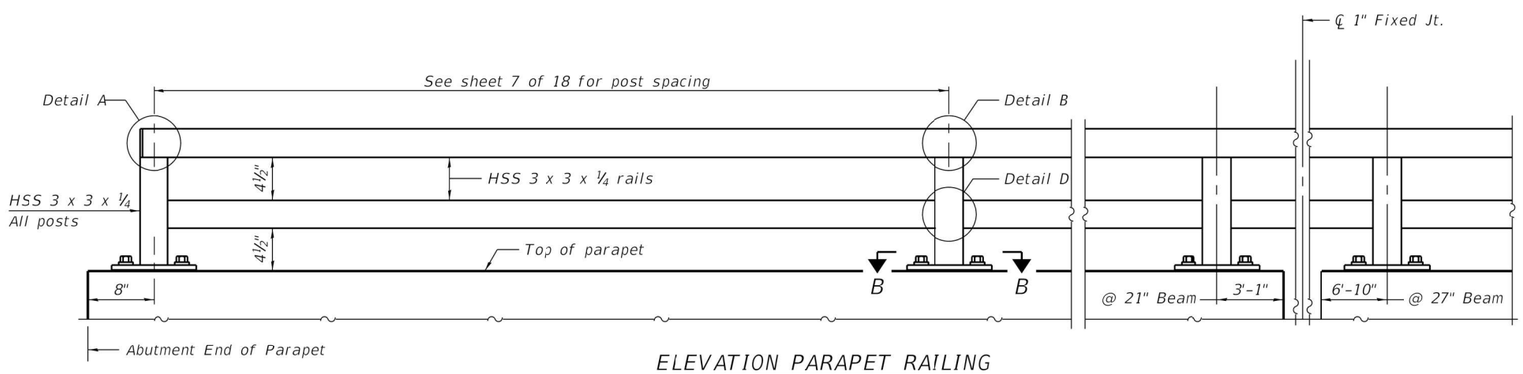

ELEVATION PARAPET RAILING

(Inside face)

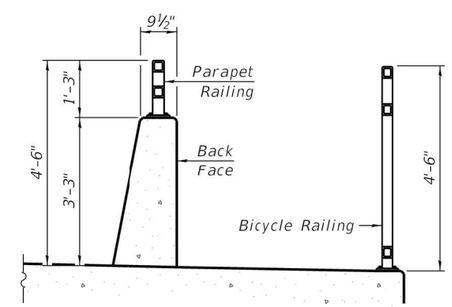

SECTION THRU DECK

RAILING CRITERIA

MASH 2016 Test Level	4
Parapet Railing Weight (plf)	25
Bicycle Railing Weight (plf)	50
Max Post Spacing	10'-0"

(Sheet 1 of 2)

VEENSTRA & KIMM INC.
A Kleinfelder Company

USER NAME =	DESIGNED - DHC	REVISED -
	CHECKED - MAH	REVISED -
PLOT SCALE =	DRAWN - JEB	REVISED -
PLOT DATE = 8/22/2025	CHECKED - MAH/DHC	REVISED -

STATE OF ILLINOIS
DEPARTMENT OF TRANSPORTATION
DEPARTMENT OF NATURAL RESOURCES

BICYCLE RAILING AND PARAPET RAILING
STRUCTURE No. 098 - 3751

SHEET 10 OF 18 SHEETS

RTE.	SECTION	COUNTY	TOTAL SHEETS	SHEET NO.
2nd St	HC BRIDGE REPAIR	WHITESIDE	37	24
		CONTRACT No. 46944		
		ILLINOIS FED. AID PROJECT		

MODEL: Default
FILE NAME: \\vkspr-fs1\sprshare\07000\0702-DOT-IDNR-Park-Roads\0702-0001-0008_PT3207_055_W08_Hennepin_Feeder_Canal_Design_and_Planning\CADD\CAD Sheets\098-3751 Structure Plans\D246944-sht 024_0983751-010-Bicycle Railing.dgn
8/23/2025 9:52:56 PM

JOB No. 7021-008 VEENSTRA & KIMM, INC. DESIGN FIRM REGISTRATION NUMBER 184-001939

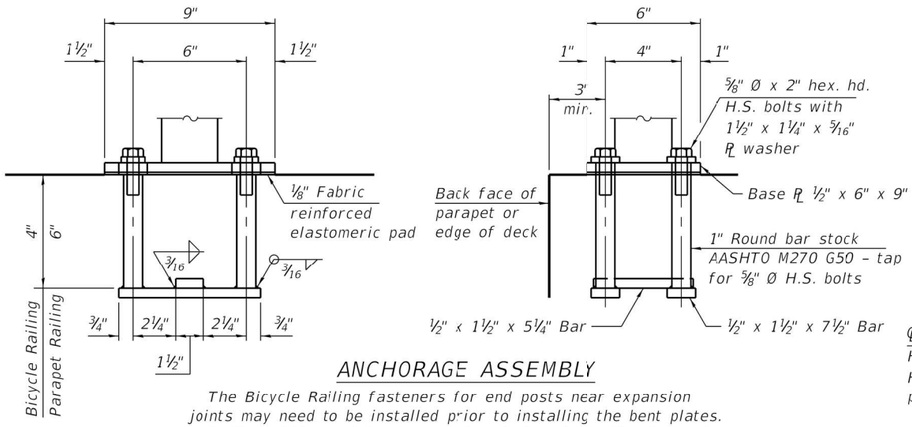

ANCHORAGE ASSEMBLY

The Bicycle Railing fasteners for end posts near expansion joints may need to be installed prior to installing the bent plates.

In lieu of the cast-in-place anchor device shown, the Contractor has the option of drilling and setting ⅝" Ø fully threaded anchor rods with the same plate washers as specified above and heavy hex lock nuts according to Article 509.06 of the Standard Specifications. Embedment shall be according to the manufacturer's specifications.

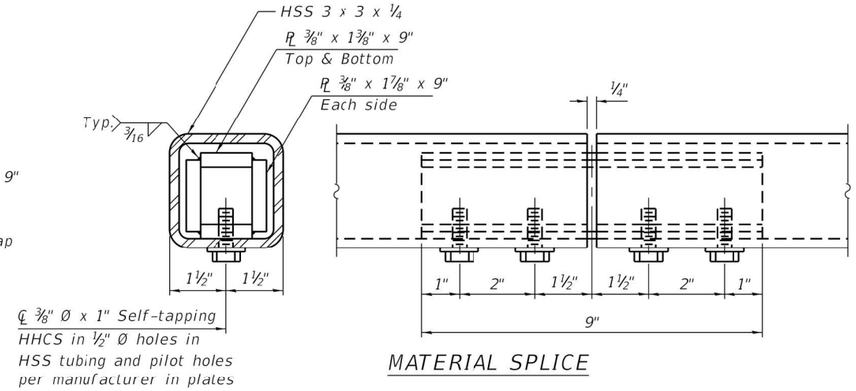

MATERIAL SPLICE

Notes:

Place reinforcement bars to miss anchor rod locations.

CVN testing is not required for the HSS tubing used in the Bicycle Railing.

All HSS tubing used for the Parapet Railing shall be CVN tested according to Article 1006.34(b) of the Standard Specifications.

All HSS tubing used for the Parapet Railing shall be ASTM A500 grade C.

All base plates used for the Paraper Railing shall be AASHTO M270 grade 50.

All heavy hex nuts shall be according to ASTM A 563 grade DH.

All fully threaded anchor rods shall be ASTM F1554 grade 105.

The post base plate shall be fastened to the curb snug tight and given an additional ⅛" turn.

Rail splice inserts may be built out of bent plates of the same thicknesses and outside geometry limits as the 4 plate rail splice inserts shown.

When the contract specifies a galvanized railing, all steel rail elements shall be galvanized according to Article 509.05 of the Standard Specifications. When the contract specifies a painted railing, all posts, rail, splices, anchor devices and plates of the railing shall be painted according to the paint system for railings as specified in the General Notes.

See sheet 12 of 18 for dimensions of concrete openings at expansion joints.

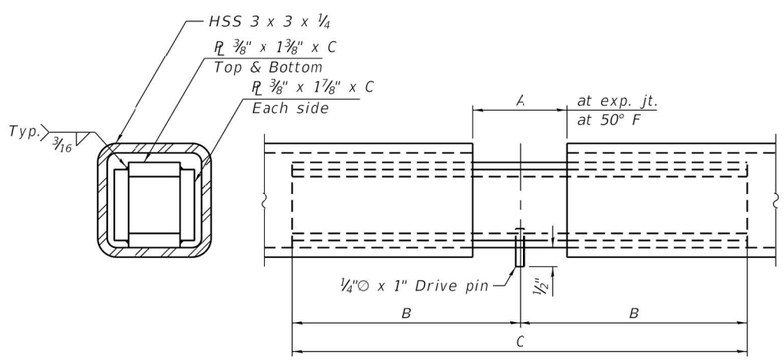

EXPANSION SPLICE

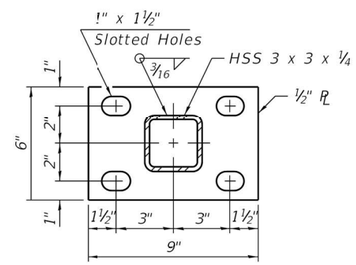

SECTION B-B

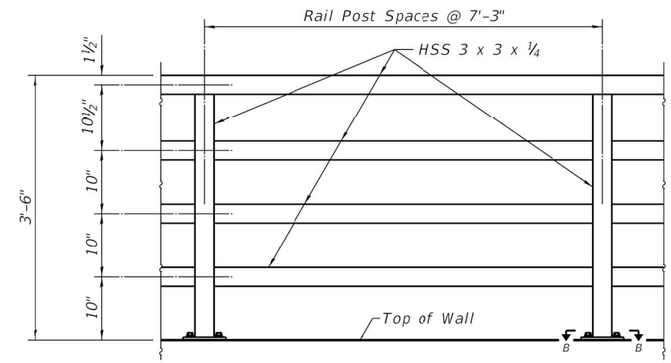

PIPE HANDRAIL

Showing Typical Panel

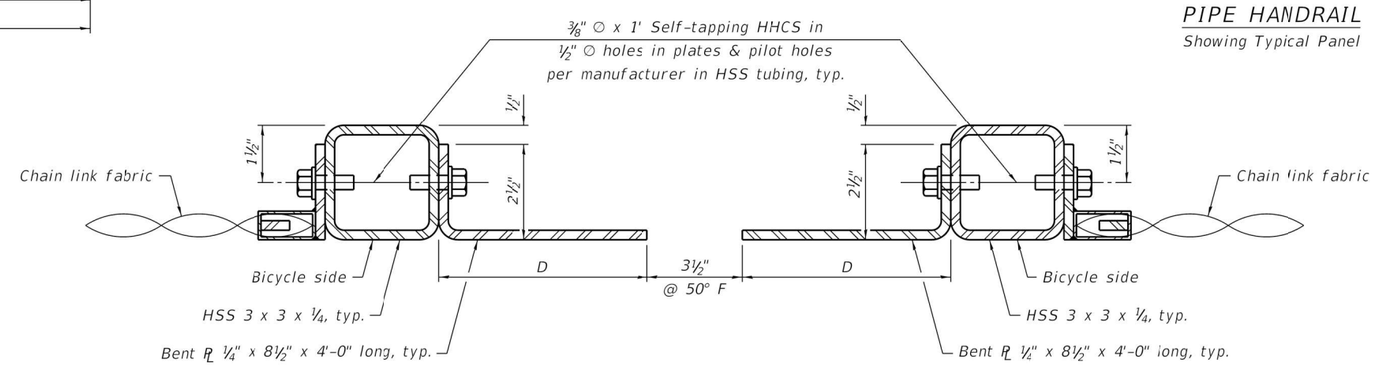

SECTION A-A

TABLE OF DIMENSIONS

Location	T	A	B	C	D	E
Over Strip Seal Jt.	≤4"	2½"	1'-2"	2'-4"	6"	7"
Over Finger or Modular Jt.	≤9½"	5½"	1'-7¾"	3'-3½"		
Over Finger or Modular Jt.	≤15"	8¼"	2'-1¼"	4'-2½"		

T= ; total movement based on total temperature range from -20°F to 120°F along centerline of roadway at expansion joint.

BILL OF MATERIAL

Item	Unit	Quantity
Bicycle Railing	Foot	100
Parapet Railing	Foot	100
Pipe Handrail	Foot	37

(Sheet 2 of 2)

VEENSTRA & KIMM INC. A Kleinfelder Company

USER NAME =	DESIGNED - DHC	REVISED -	
	CHECKED - MAH	REVISED -	
PLOT SCALE =	DRAWN - JEB	REVISED -	
PLOT DATE = 8/22/2025	CHECKED - MAH/DHC	REVISED -	

STATE OF ILLINOIS
DEPARTMENT OF TRANSPORTATION
DEPARTMENT OF NATURAL RESOURCES

BICYCLE RAILING AND PARAPET RAILING
STRUCTURE No. 098-3751

SHEET 11 OF 18 SHEETS

RTE.	SECTION	COUNTY	TOTAL SHEETS	SHEET NO.
2nd St	HC BRIDGE REPAIR	WHITESIDE	37	25
		CONTRACT No. 46944		
		ILLINOIS FED. AID PROJECT		

MODEL: Default
FILE NAME: \\kspr-fs1\sprshare\07000702_DOT-IDNR-Park-Roads\0702-0001-0008_PT3207_055_W08_Hennepin_Feeder_Canal_Design_and_Planning\CADD\CAD Sheets\098-3751 Structure Plans\D246944-sht 025_0983751-011-Steel Railing.dgn
8/23/2025 9:57:12 PM

JOB No. 7021-008 VEENSTRA & KIMM, INC. DESIGN FIRM REGISTRATION NUMBER 184-001939

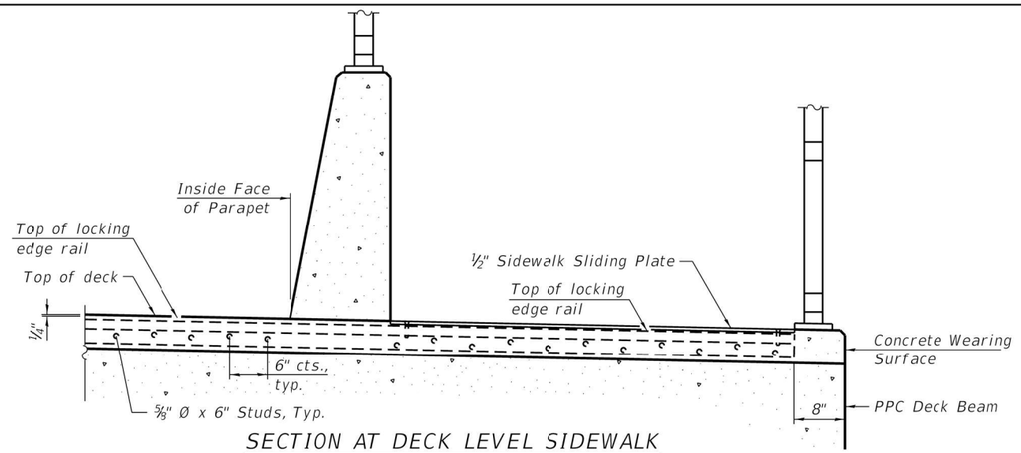

SECTION AT DECK LEVEL SIDEWALK
WEST ABUTMENT

Skew = 0°
(Looking East)

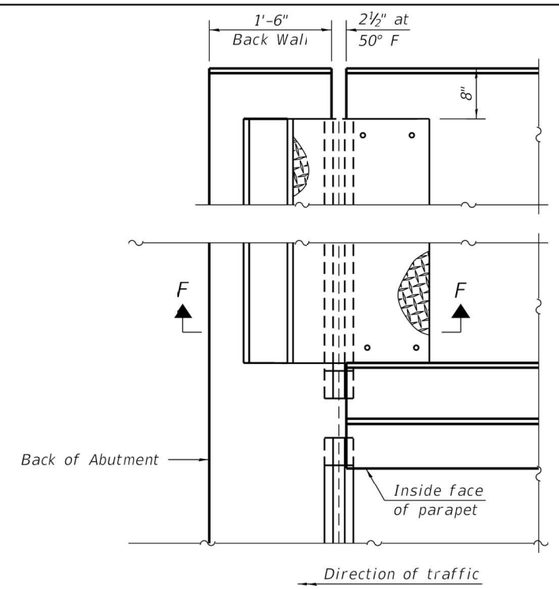

PLAN AT DECK LEVEL SIDEWALK

East End Shown, West End Similar

Notes:

The strip seal shall be made continuous and shall have a minimum thickness of ¼". The configuration of the strip seal shall match the configuration of the locking edge rails. Open or "webbed" strip seal gland configurations are not permitted. The gland shall be sized for a maximum rated movement of 4 inches.

The locking edge rails depicted are configured for typical applications and are conceptual only. The actual configuration of the locking edge rails and matching strip seal may vary from manufacturer to manufacturer provided they fit the application and meet the minimum anchorage shown. Flanged edge rails, however, will not be allowed. Locking edge rails may exceed the 4½" maximum depth provided the anchorage system is revised according to the manufacturer's recommendation.

The manufacturer's recommended installation methods shall be followed.

All steel components shall be galvanized after fabrication according to Article 520.03 of the Standard Specifications.

The Maximum space between locking edge rail segments shall be 3/16" and sealed with a suitable sealant; however, any rail joint within 10' measured perpendicular to the face of the curb or parapet shall be welded as shown in the locking edge rail splice detail.

Cost of sidewalk sliding plates and expansion anchors included with Preformed Joint Strip Seal.

The concrete opening below the strip seal will vary based on the locking edge rail chosen by the Contractor. Deck and parapet lengths shown elsewhere in the plans are dimensioned to the concrete opening, not the joint opening, and are based on the rolled locking edge rail. If the Contractor elects to use a different locking edge rail, dimensional adjustments may be required.

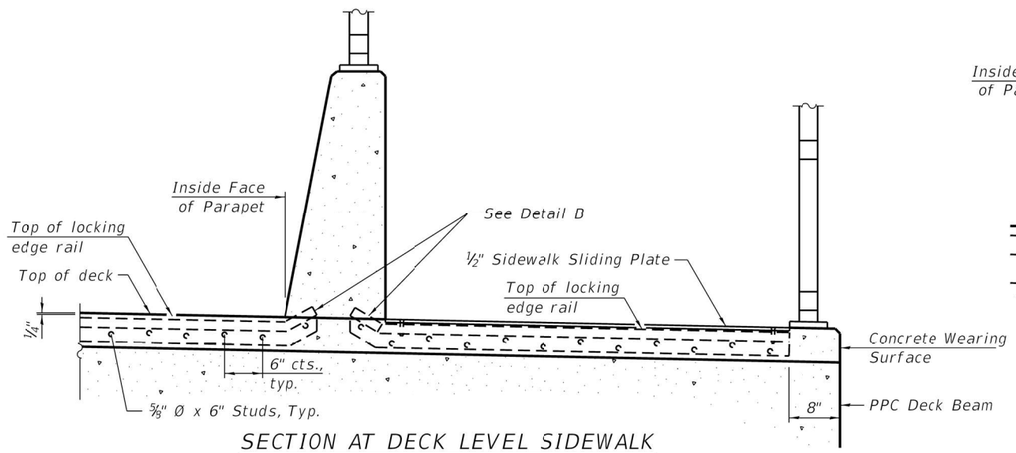

SECTION AT DECK LEVEL SIDEWALK
EAST ABUTMENT

Skew = 0°
(Looking East)

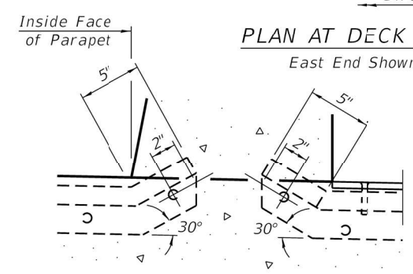

DETAIL B

Kick-up at pararet locations shown.
See sheet X of 18 for
kick-up at curb locations

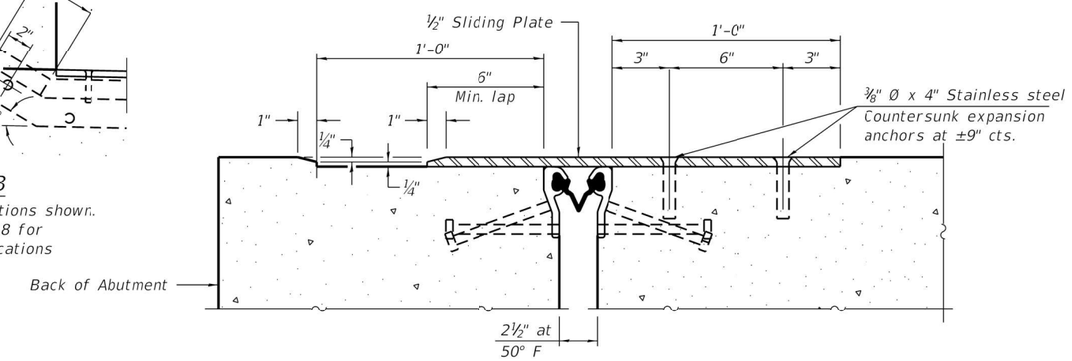

SECTION F-F

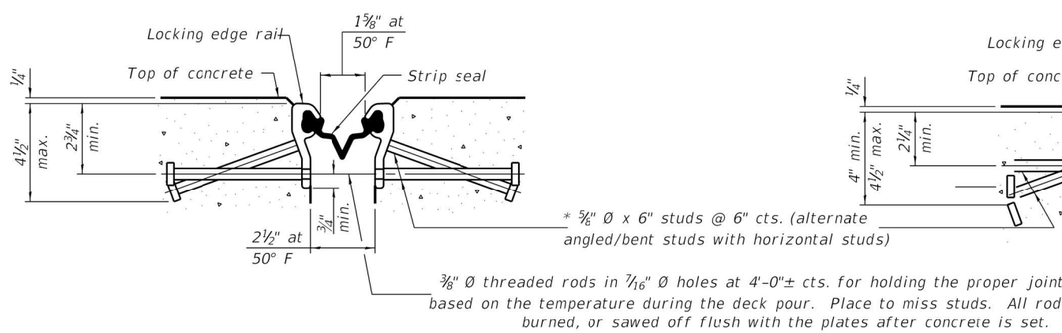

SHOWING ROLLED RAIL JOINT

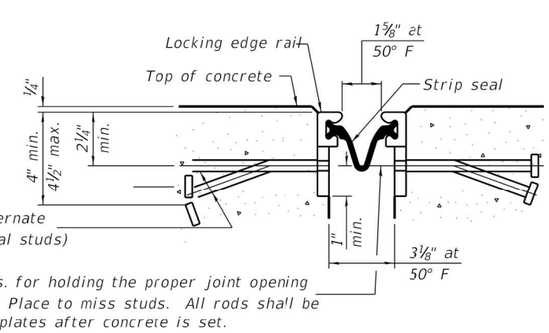

SHOWING WELDED RAIL JOINT

SECTION A-A

* Granular or solid flux filled headed studs conforming to Article 1006.32 of the Std. Specs., automatically end welded.

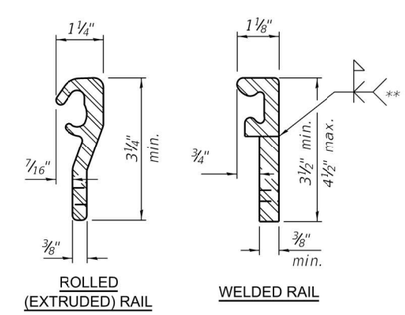

ROLLED
(EXTRUDED) RAIL

WELDED RAIL

LOCKING EDGE RAILS

** Back gouge not required if complete joint penetration is verified by mock-up.

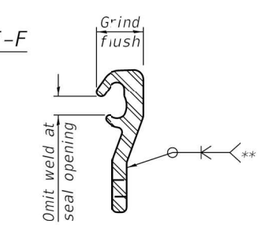

LOCKING EDGE RAIL SPLICE

The inside of the locking edge rail groove shall be free of weld residue. Rolled rail shown, welded rail similar.

BILL OF MATERIAL

Item	Unit	Total
Preformed Joint Strip Seal	Foot	66

VEENSTRA & KIMM INC.
A Kleinfelder Company

USER NAME =	DESIGNED - DHC	REVISED -	
	CHECKED - MAH	REVISED -	
PLOT SCALE =	DRAWN - JEB	REVISED -	
PLOT DATE = 8/22/2025	CHECKED - MAH/DHC	REVISED -	

STATE OF ILLINOIS
DEPARTMENT OF TRANSPORTATION
DEPARTMENT OF NATURAL RESOURCES

PREFORMED JOINT STRIP SEAL
STRUCTURE No. 098-3751

SHEET 12 OF 18 SHEETS

RTE.	SECTION	COUNTY	TOTAL SHEETS	SHEET NO.
2nd St	HC BRIDGE REPAIR	WHITESIDE	37	26
		CONTRACT No. 46944		
		ILLINOIS FED. AID PROJECT		

MODEL: Default
FILE NAME: \\wkspr-fs1\sprshare\07000\702-DOT-IDNR-Park-Roads\0702-0001-0008_PT3207_055_WO8_Hennepin_Feeder_Canal_Design_and_Planning\CADD\CAD Sheets\098-3751 Structure Plans\D246944-sht 026_0983751-012-Joint Strip Seal.dgn
8/23/2025 9:58:30 PM

JOB No. 7021-008 VEENSTRA & KIMM, INC. DESIGN FIRM REGISTRATION NUMBER 184-001939

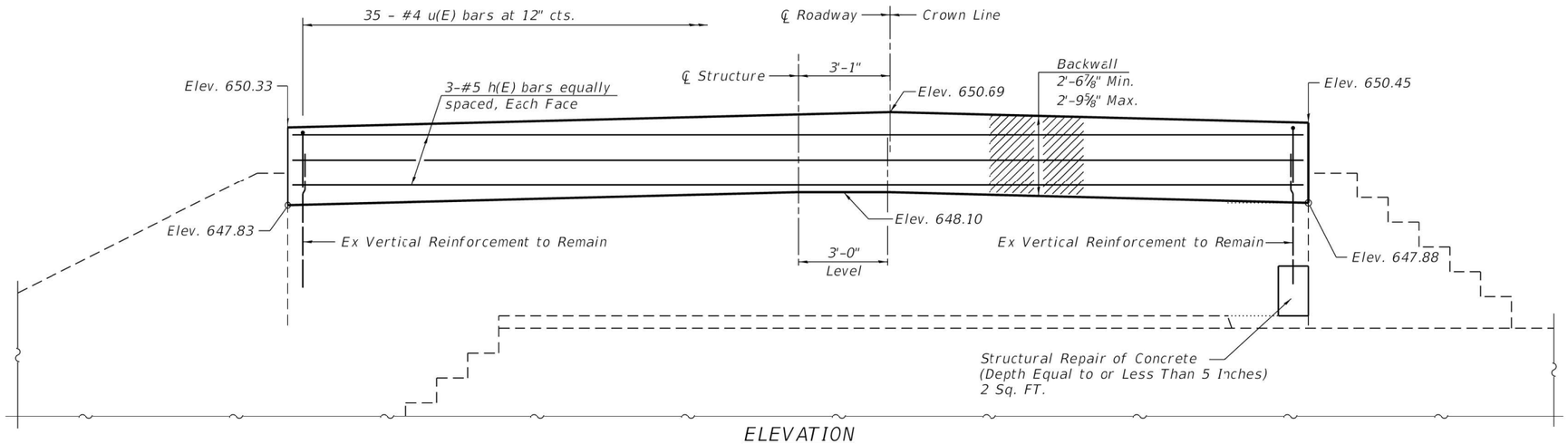

ELEVATION
Looking Westerly

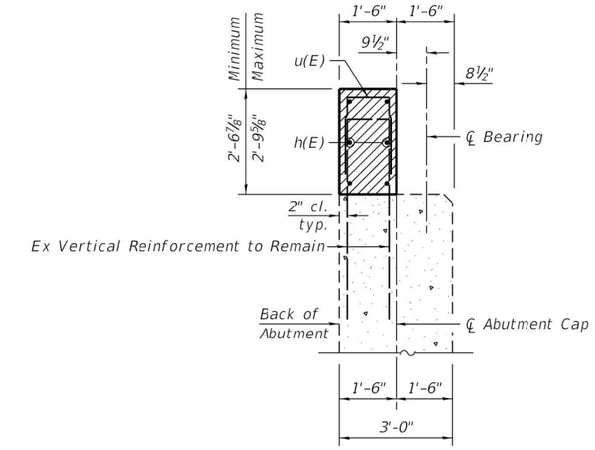

SECTION A-A
(Showing Concrete Structures)

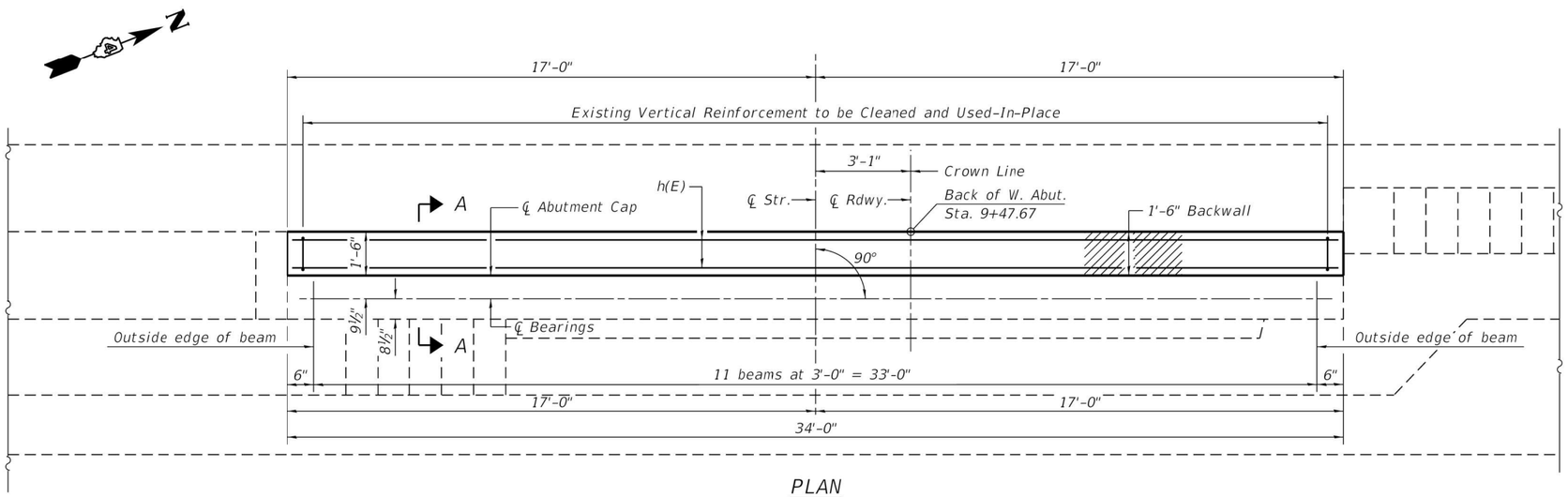

PLAN

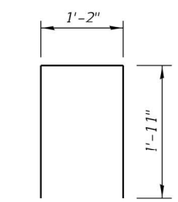

BAR u(E)

BILL OF MATERIAL

Bar	No.	Size	Length	Shape
h(E)	6	#5	33'-8"	
u(E)	35	#4	5'-0"	
Structure Excavation			Cu. Yd.	8.6
Concrete Removal			Cu. Yd.	3.4
Concrete Structures			Cu. Yd.	5.1
Reinforcement Bars, Epoxy Coated			Pound	330
Str. Repair of Conc. (Depth =< 5 Inches)			Sq Ft.	2

Notes:
All exposed edges shall have standard ¾" chamfer unless noted otherwise.

Hatched area shall be poured after beams are anchored in place.

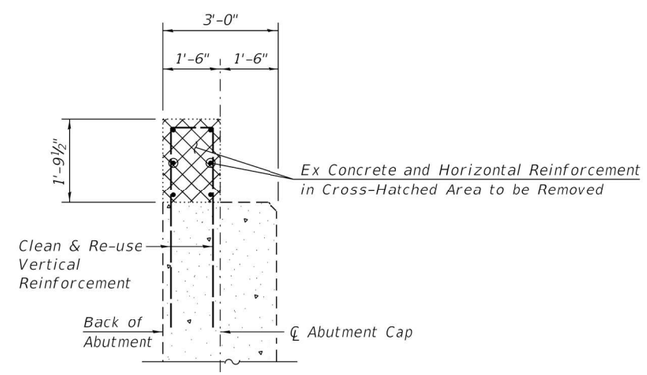

SECTION A-A
(Showing Removal)

MODEL: Default
FILE NAME: \\vkspr-fs1\sprshare\07000\0702-DOT-IDNR-Park-Roads\0702-0001-0008_PT3207_055_W08_Hennepin_Feeder_Canal_Design_and_Planning\CADD\CAD Sheets\098-3751 Structure Plans\D246944-sht 027_09837751-013-West Abutment.dgn
8/23/2025 9:59:34 PM

JOB No. 7021-008 VEENSTRA & KIMM, INC. DESIGN FIRM REGISTRATION NUMBER 184-001939

VEENSTRA & KIMM INC.
A Kleinfelder Company

USER NAME =	DESIGNED - DHC	REVISED -	
	CHECKED - MAH	REVISED -	
PLOT SCALE =	DRAWN - JEB	REVISED -	
PLOT DATE = 8/22/2025	CHECKED - MAH/DHC	REVISED -	

STATE OF ILLINOIS
DEPARTMENT OF TRANSPORTATION
DEPARTMENT OF NATURAL RESOURCES

WEST ABUTMENT
STRUCTURE No. 098-3751
SHEET 13 OF 18 SHEETS

RTE.	SECTION	COUNTY	TOTAL SHEETS	SHEET NO.
2nd St	HC BRIDGE REPAIR	WHITESIDE	37	27
		CONTRACT No. 46944		
		ILLINOIS FED. AID PROJECT		

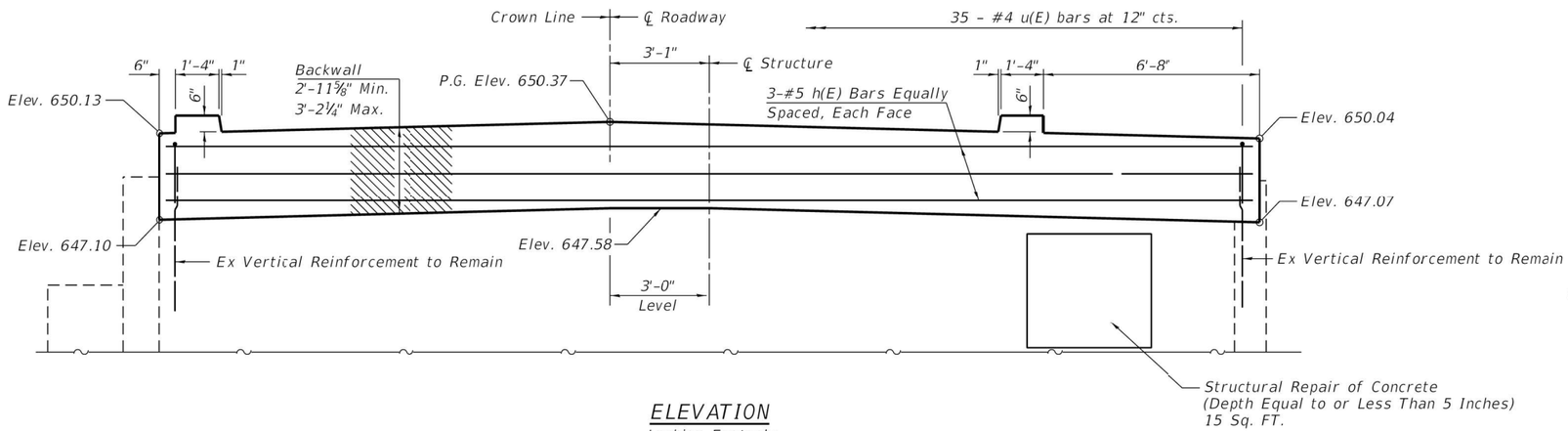

ELEVATION

Looking Easterly

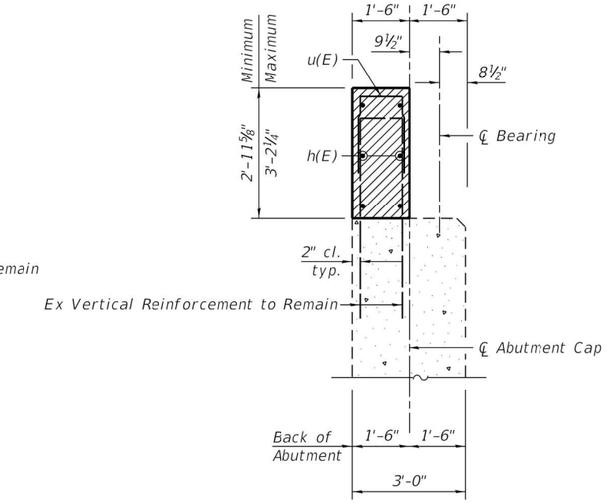

SECTION A-A

(Showing Concrete Structures)

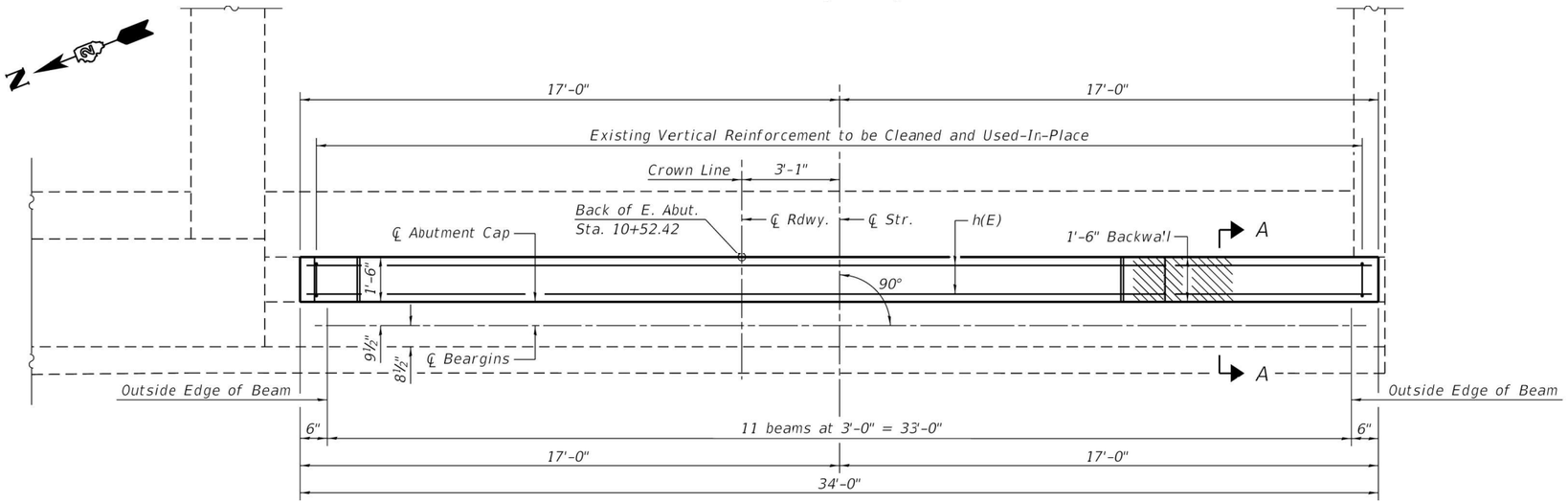

PLAN

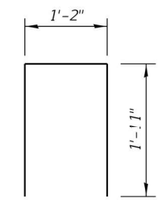

BAR u(E)

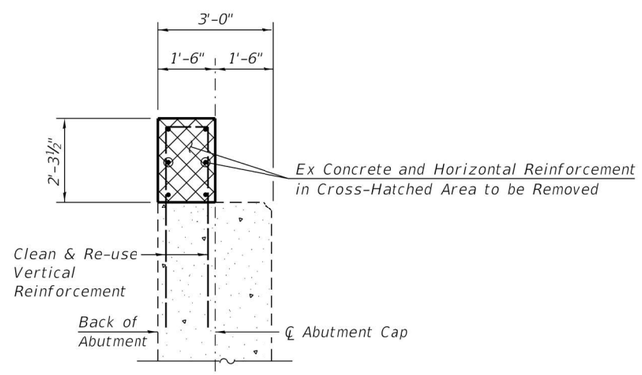

SECTION A-A

(Showing Removal)

BILL OF MATERIAL

Bar	No.	Size	Length	Shape
h(E)	6	#5	33'-8"	
u(E)	35	#4	5'-0"	
Structure Excavation			Cu. Yd.	11.8
Concrete Removal			Cu. Yd.	4.3
Concrete Structures			Cu. Yd.	5.8
Reinforcement Bars, Epoxy Coated			Pound	330
Str. Repair of Conc. (Depth =< 5 Inches)			Sq. Ft.	15

Notes:

All exposed edges shall have standard ¾" chamfer unless noted otherwise.

Hatched area shall be poured after beams are anchored in place.

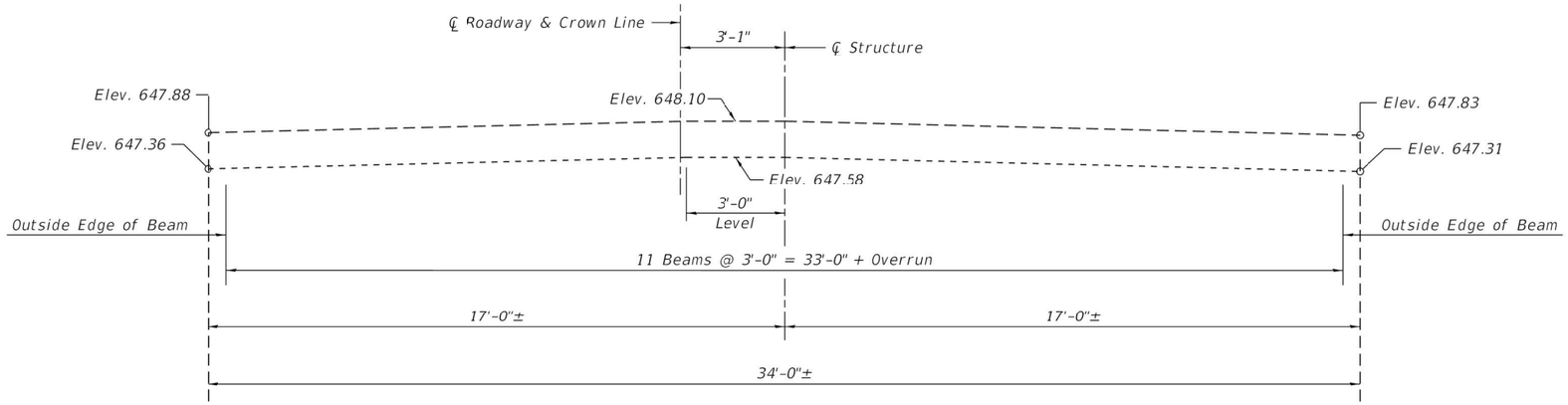

ELEVATION

Looking Easterly

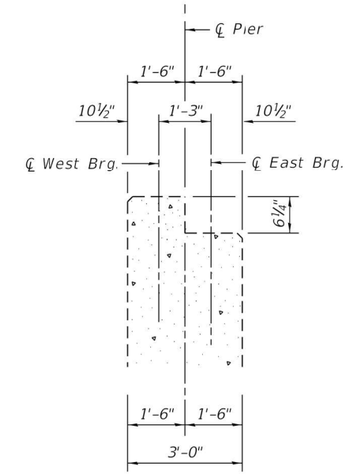

SECTION A-A

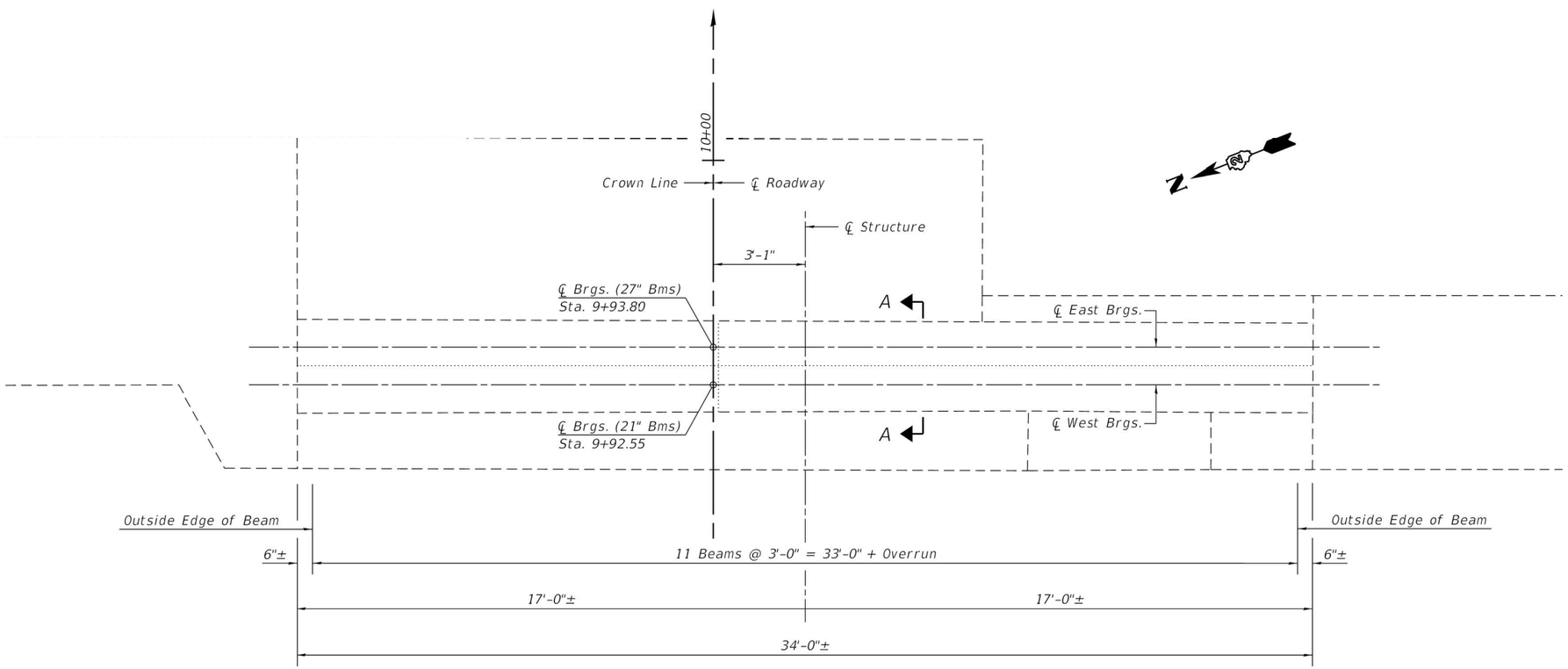

PLAN

FOR INFORMATION ONLY

MODEL: Default
FILE NAME: \\kspr-fs1\sprshare\07000\0702-DOT-IDNR-Park-Roads\0702-0001-0008_PT3207_055_WO8_Hennepin_Feeder_Canal_Design_and_Planning\CADD\CAD Sheets\098-3751 Structure Plans\D246944-sht 029_09837751-015-Pier.dgn

8/23/2025 10:01:28 PM

VEENSTRA & KIMM INC.
A Kleinfelder Company

USER NAME =	DESIGNED - DHC	REVISED -	
	CHECKED - MAH	REVISED -	
PLOT SCALE =	DRAWN - JEB	REVISED -	
PLOT DATE = 8/22/2025	CHECKED - MAH/DHC	REVISED -	

STATE OF ILLINOIS
DEPARTMENT OF TRANSPORTATION
DEPARTMENT OF NATURAL RESOURCES

EXISTING PIER
STRUCTURE No. 098-3751

SHEET 15 OF 18 SHEETS

RTE.	SECTION	COUNTY	TOTAL SHEETS	SHEET NO.
2nd St	HC BRIDGE REPAIR	WHITESIDE	37	29

CONTRACT No. 46944

ILLINOIS | FED. AID PROJECT

JOB No. 7021-008 VEENSTRA & KIMM, INC. DESIGN FIRM REGISTRATION NUMBER 184-001939

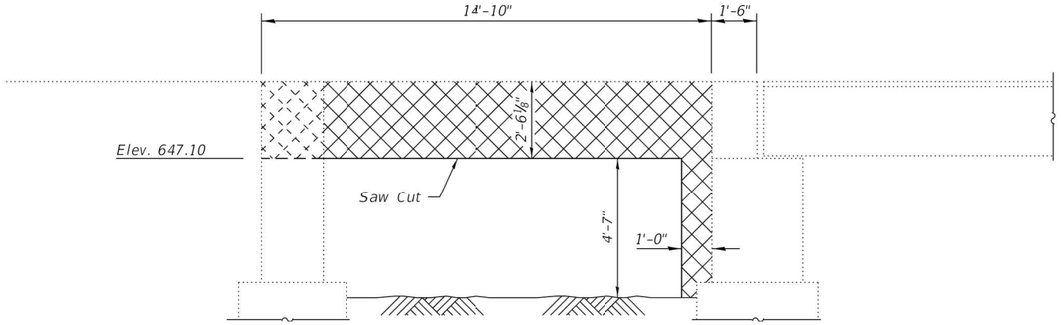

CONCRETE REMOVAL
(Looking South)

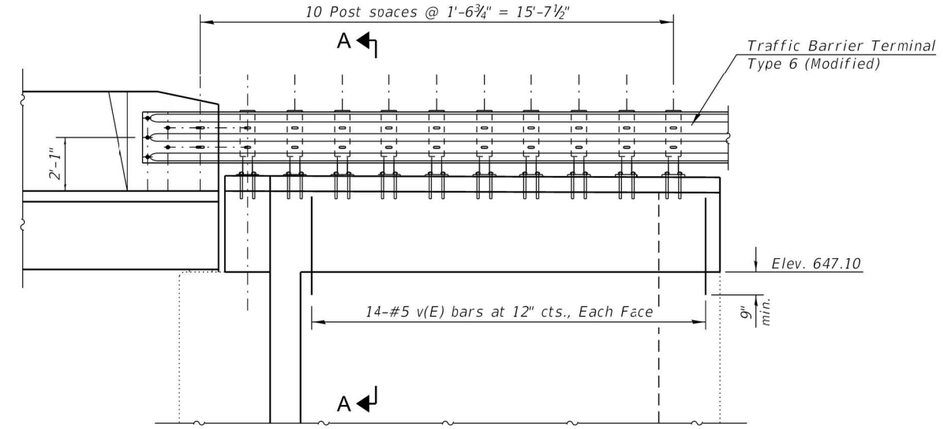

ELEVATION
(Looking North)

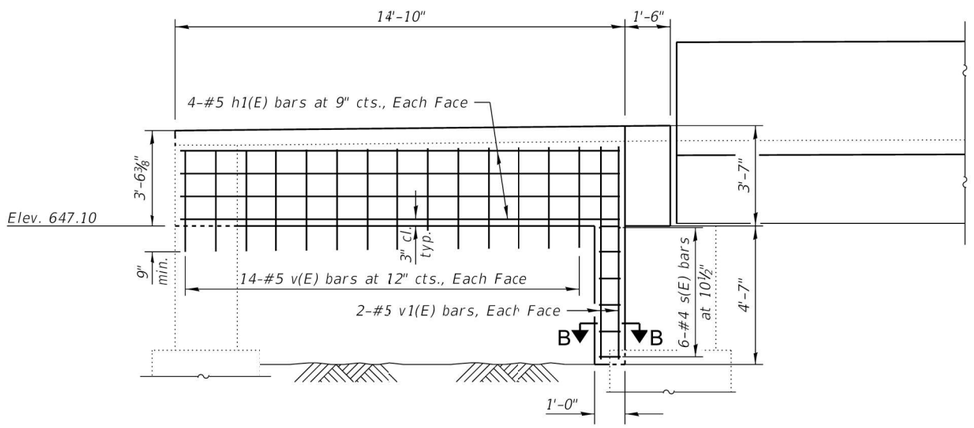

CONCRETE REPAIR
(Looking South)

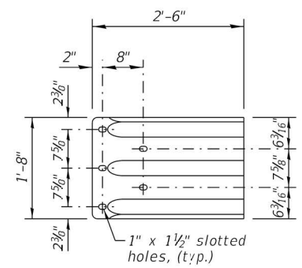

THRIE BEAM END SHOE DETAIL
(East End of North Parapet Only)
See Std 631031 for further details and for standard End Shoe @ West End of South Parapet

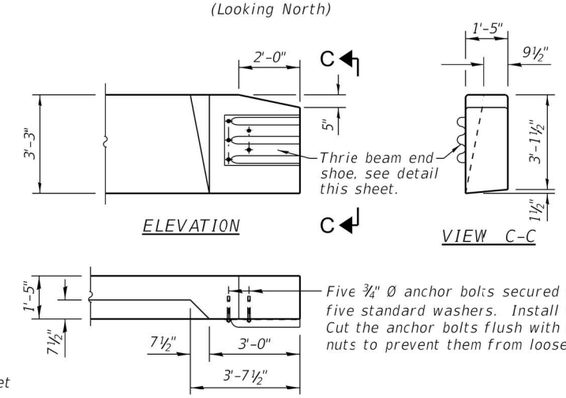

ELEVATION

VIEW C-C

PLAN

EAST END OF NORTH PARAPET

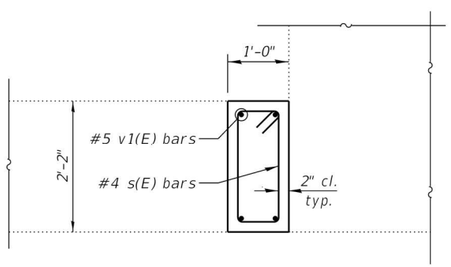

SECTION B-B

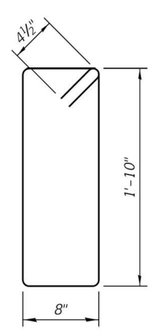

BAR S(E)

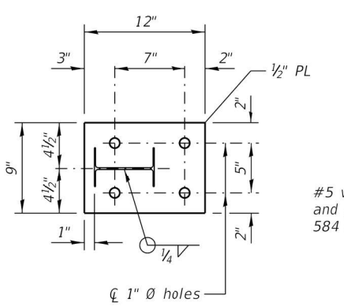

SECTION D-D

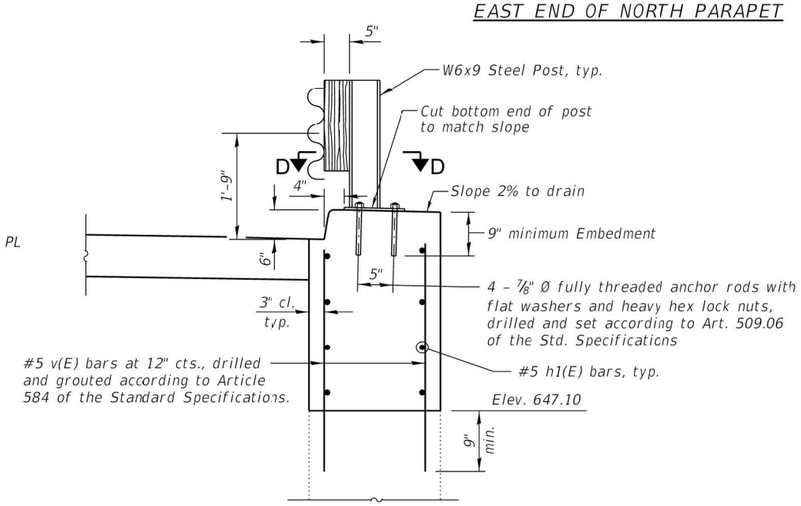

SECTION A-A

BILL OF MATERIAL

Bar	No.	Size	Length	Shape
h1(E)	8	#5	14'-6"	
s(E)	6	#4	5'-9"	
v(E)	28	#5	3'-10"	
v1(E)	4	#5	7'-10"	
Concrete Removal			Cu. Yd.	3.4
Concrete Structures			Cu. Yd.	4.2
Reinforcement Bars, Epoxy Coated			Pound	290

Notes:
All exposed edges shall have standard ¾" chamfer unless noted otherwise.

Revised details for the Traffic Barrier Terminal at the Northeast corner of the bridge are included with Traffic Barrier Terminal, Type 6.

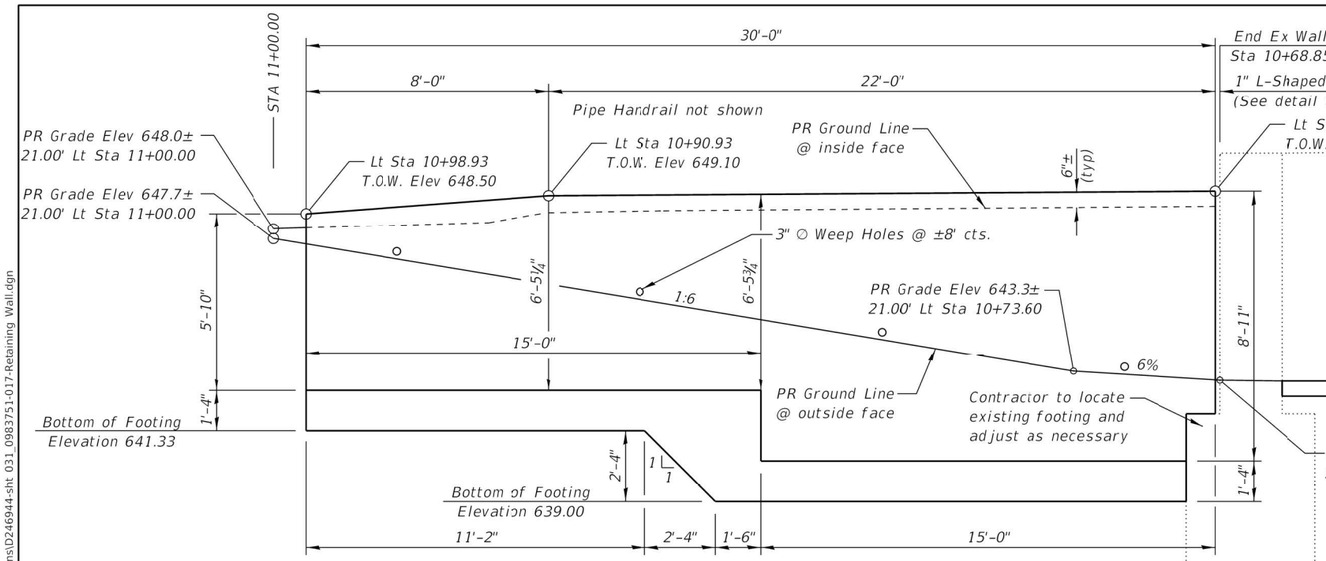

CONCRETE RETAINING WALL
Showing Dimensions
(Looking South)

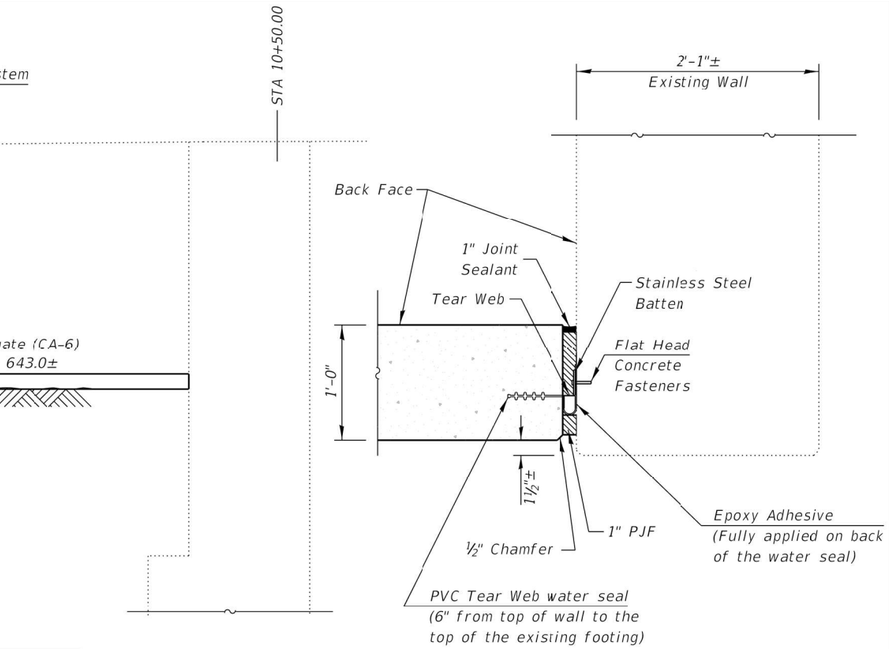

L-SHAPED RETROFIT WATERSTOP SYSTEM

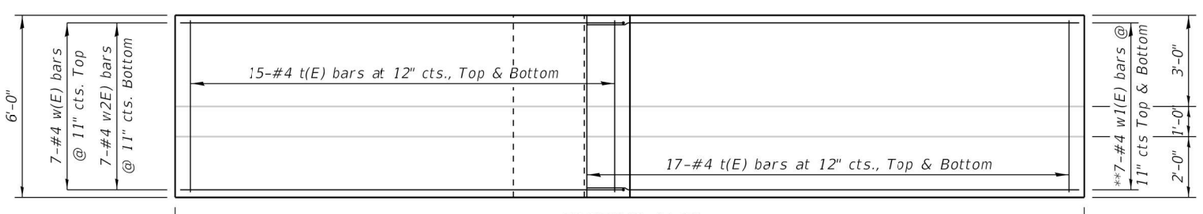

FOOTING PLAN

**Cut to fit at existing footing

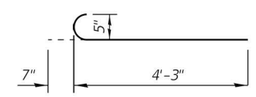

BAR n(E)

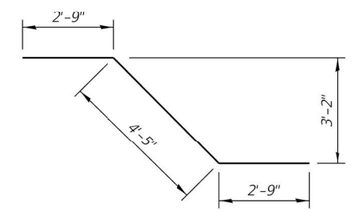

BAR s1(E)

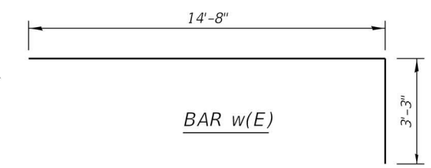

BAR w(E)

BILL OF MATERIAL

Bar	No.	Size	Length	Shape
h2(E)	10	#4	29'-8"	
h3(E)	4	#4	14'-8"	
n(E)	46	#5	4'-10"	
s1(E)	7	#5	9'-11"	
t(E)	66	#4	5'-8"	
v2(E)	34	#4	6'-1"	
v3(E)	33	#4	8'-7"	
w(E)	7	#4	17'-11"	
w1(E)	14	#4	16'-2"	
w2(E)	7	#4	14'-8"	
Concrete Structures			Cu. Yd.	18.6
Reinforcement Bars, Epoxy Coated			Pound	1,430

Note:
All exposed edges shall have standard ¾" chamfer unless noted otherwise.

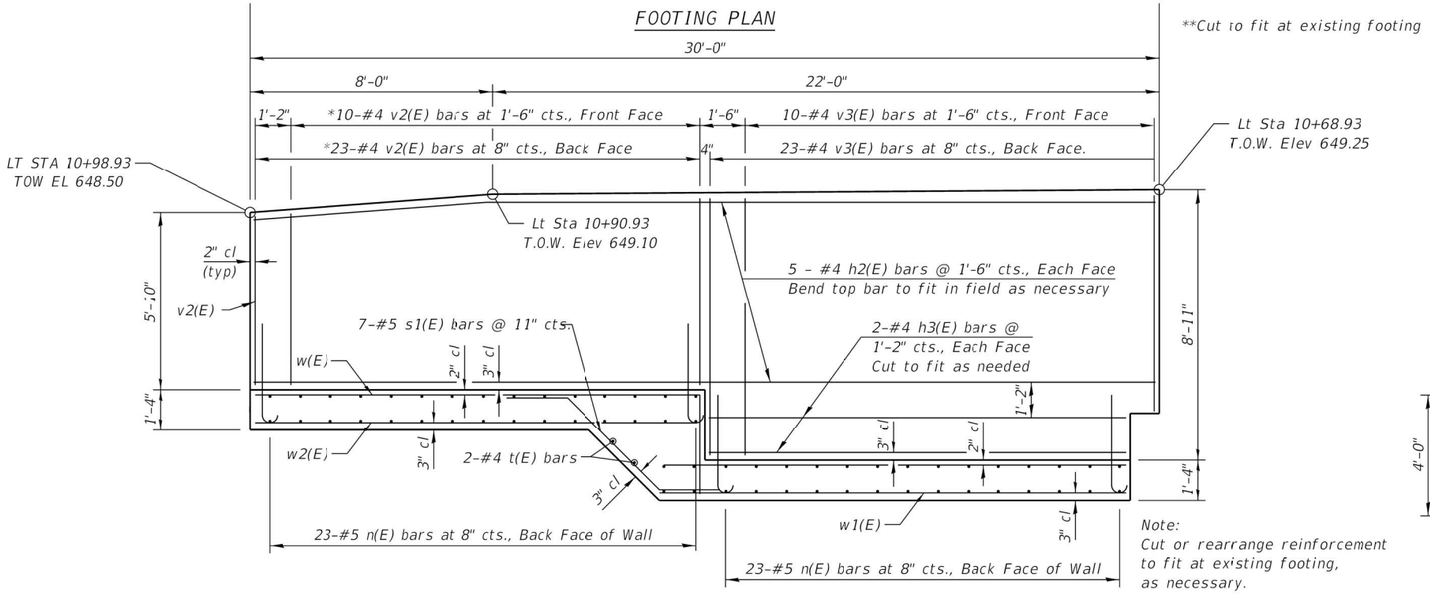

Note:
Cut or rearrange reinforcement to fit at existing footing, as necessary.

*Cut to fit in taper at east end

CONCRETE RETAINING WALL
Showing Reinforcement
(Looking South)

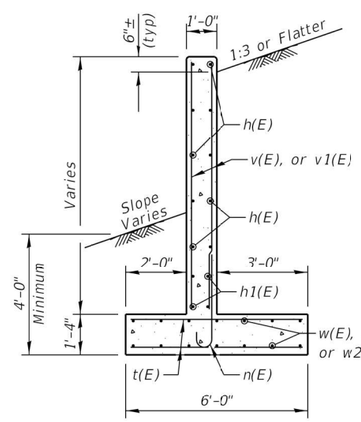

SECTION THRU RETAINING WALL
(Looking East)

VEENSTRA & KIMM INC.
A Kleinfelder Company

USER NAME =	DESIGNED - DHC	REVISED -	
	CHECKED - MAH	REVISED -	
PLOT SCALE =	DRAWN - JEB	REVISED -	
PLOT DATE = 8/22/2025	CHECKED - DHC/MAH	REVISED -	

STATE OF ILLINOIS
DEPARTMENT OF TRANSPORTATION
DEPARTMENT OF NATURAL RESOURCES

CONCRETE RETAINING WALL
STRUCTURE No. 098-3751

SHEET 17 OF 18 SHEETS

RTE.	SECTION	COUNTY	TOTAL SHEETS	SHEET NO.
2nd St	HC BRIDGE REPAIR	WHITESIDE	37	31
		CONTRACT No. 46944		
	ILLINOIS	FED. AID PROJECT		

Default
\\vkspr-fs1\sprshare\0700\0702-DOT-IDNR-Park-Roads\0702-0001-0008_PT3207_055_WO8_Hennepin_Feeder_Canal_Design_and_Planning\CADD\CAD Sheets\098-3751 Structure Plans\D246944-sht 031_0983751-017-Retaining Wall.dgn

8/23/2025 11:10:23 PM

JOB No. 7021-000 VEENSTRA & KIMM, INC. DESIGN FIRM REGISTRATION NUMBER 184-001939

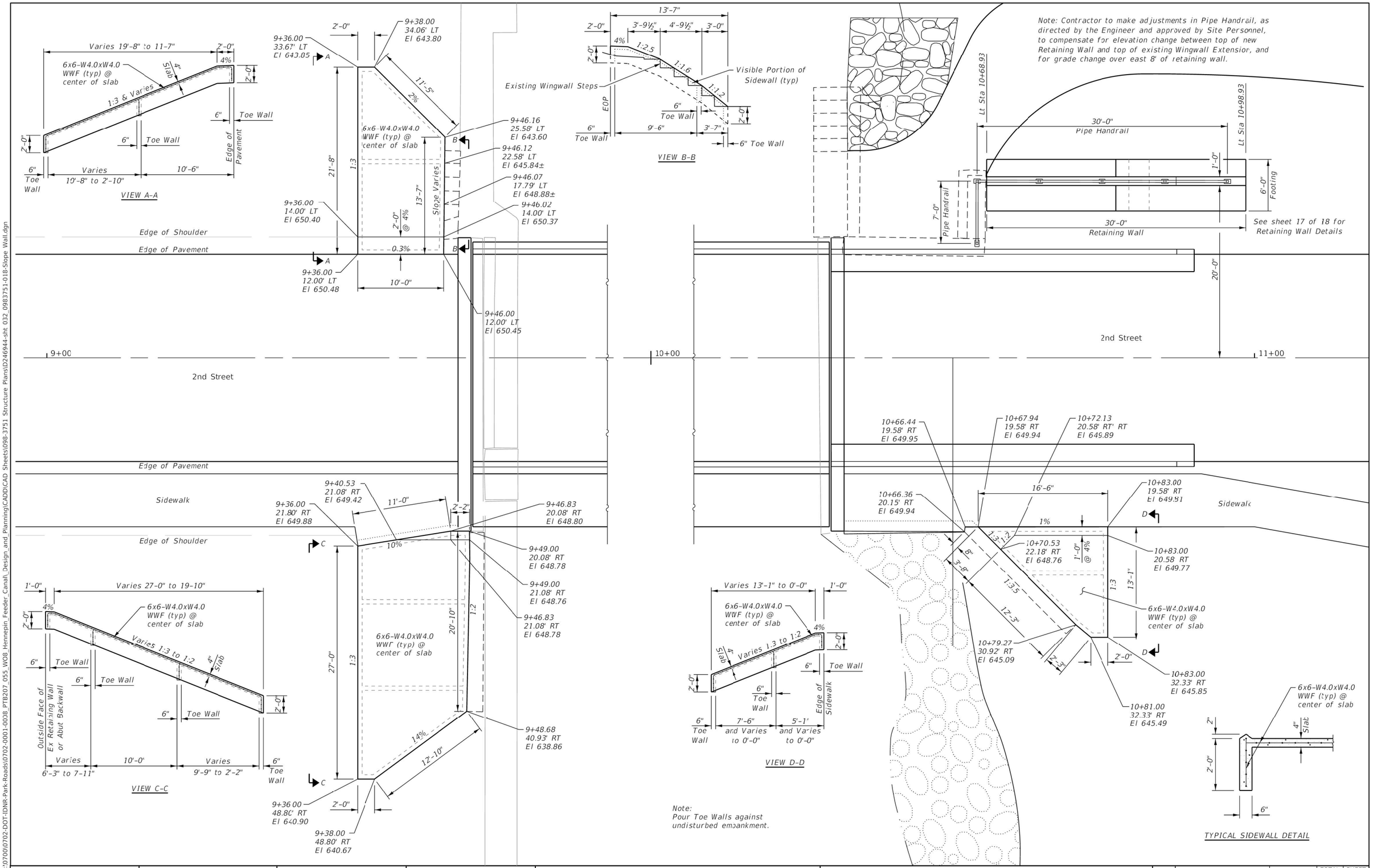

MODEL: Default
FILE NAME: J:\0700\0702-DOT-IDNR-Park-Roads\0702-0001-0038_PTB207_055_W08_Hennepin_Feeder_Canal_Design_and_Planning\CADD\CAD Sheets\098-3751 Structure Plans\D246944-sht 032_0983751-018-Slope Wall.dgn

VEENSTRA & KIMM INC. A Kleinfelder Company	USER NAME =	DESIGNED - DHC	REVISED -
		CHECKED - MAH	REVISED -
	PLOT SCALE =	DRAWN - JEB	REVISED -
	PLOT DATE = 8/22/2025	CHECKED - DHC/MAH	REVISED -

STATE OF ILLINOIS
DEPARTMENT OF TRANSPORTATION
DEPARTMENT OF NATURAL RESOURCES

CONCRETE SLOPE WALL DETAILS
STRUCTURE No. 098 - 3751

SHEET 18 OF 18 SHEETS

RTE.	SECTION	COUNTY	TOTAL SHEETS	SHEET NO.
2nd St	HC BRIDGE REPAIR	WHITESIDE	37	32
		CONTRACT No. 46944		
		ILLINOIS FED. AID PROJECT		

9/4/2025 12:24:46 AM

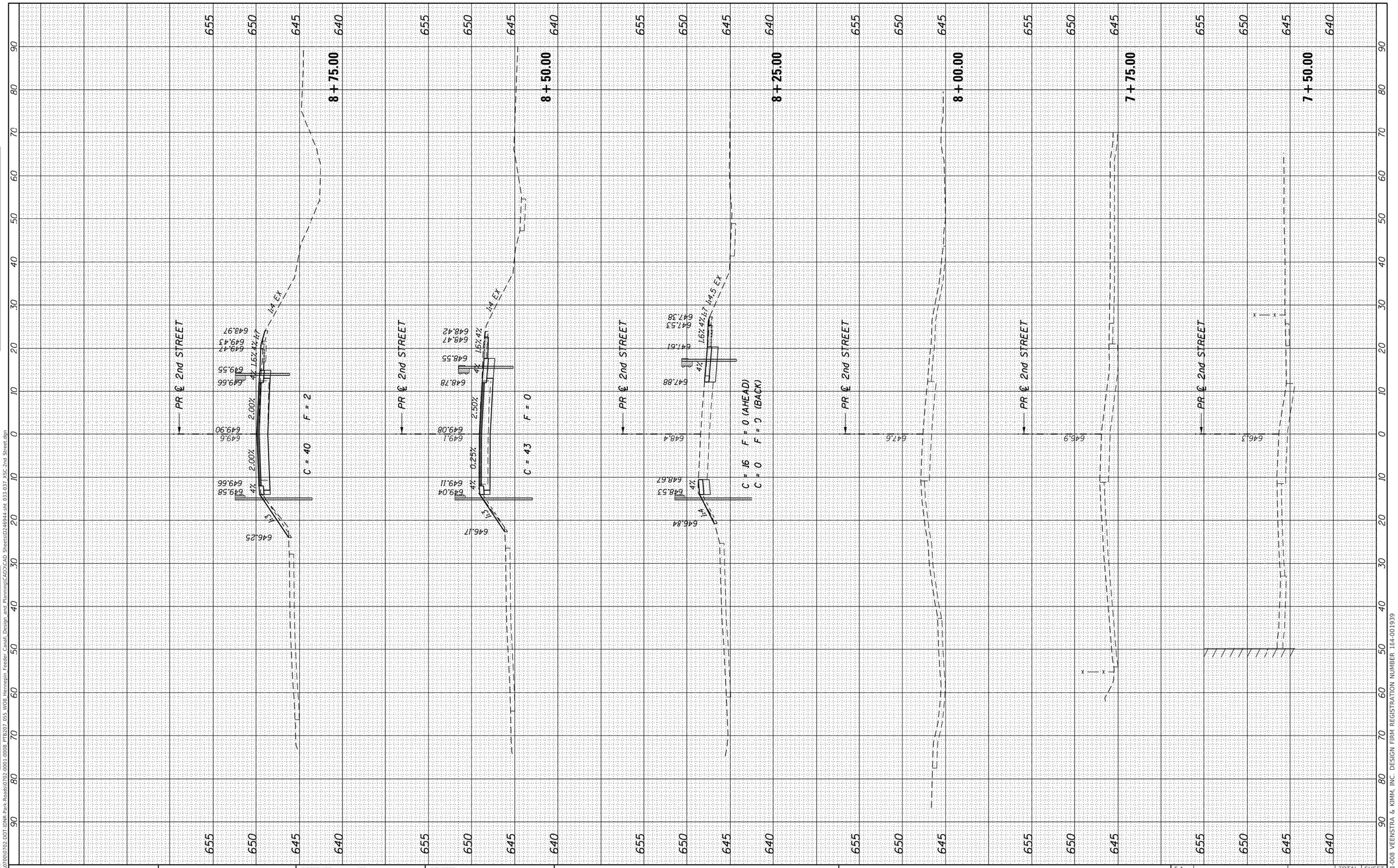

FINAL SURVEY		BY	DATE
NOTE BOOK	SURVEYED		
	PLOTTED		
	TEMPLATE		
	AREAS		
NO.	AREAS CHECKED		

ORIGINAL SURVEY		BY	DATE
NOTE BOOK	SURVEYED		
	PLOTTED		
	TEMPLATE		
	AREAS		
NO.	AREAS CHECKED		

MODEL: Default
FILE NAME: J:\0700\0702-DOT-IDNR-Park-Roads\0702-0001-0008 PTB207 055 WOB Hennepin Feeder Canal\ Design and Planning\CAD\CAD Sheets\0246944-sht 033-037 XSC-2nd Street.dgn

JOB No. 7021-008 VEENSTRA & KIMM, INC. DESIGN FIRM REGISTRATION NUMBER 184-001939

VEENSTRA & KIMM INC.
A Kleinfelder Company

USER NAME = jbegue	DESIGNED - JEB	REVISED -
	DRAWN - JEB	REVISED -
PLOT SCALE = 20.0000 ' / in.	CHECKED - RHD	REVISED -
PLOT DATE = 9/4/2025	DATE - 8-22-2025	REVISED -

STATE OF ILLINOIS
DEPARTMENT OF TRANSPORTATION

CROSS SECTIONS – 2nd STREET

SCALE: 10'H 5'V | SHEET 1 OF 5 SHEETS | STA. 7+50.00 TO STA. 8+75.00

F.A. RTE.	SECTION	COUNTY	TOTAL SHEETS	SHEET NO.
2nd St	HC BRIDGE REPAIR	WHITESIDE	37	33
		CONTRACT NO. 46944		
		ILLINOIS FED. AID PROJECT		

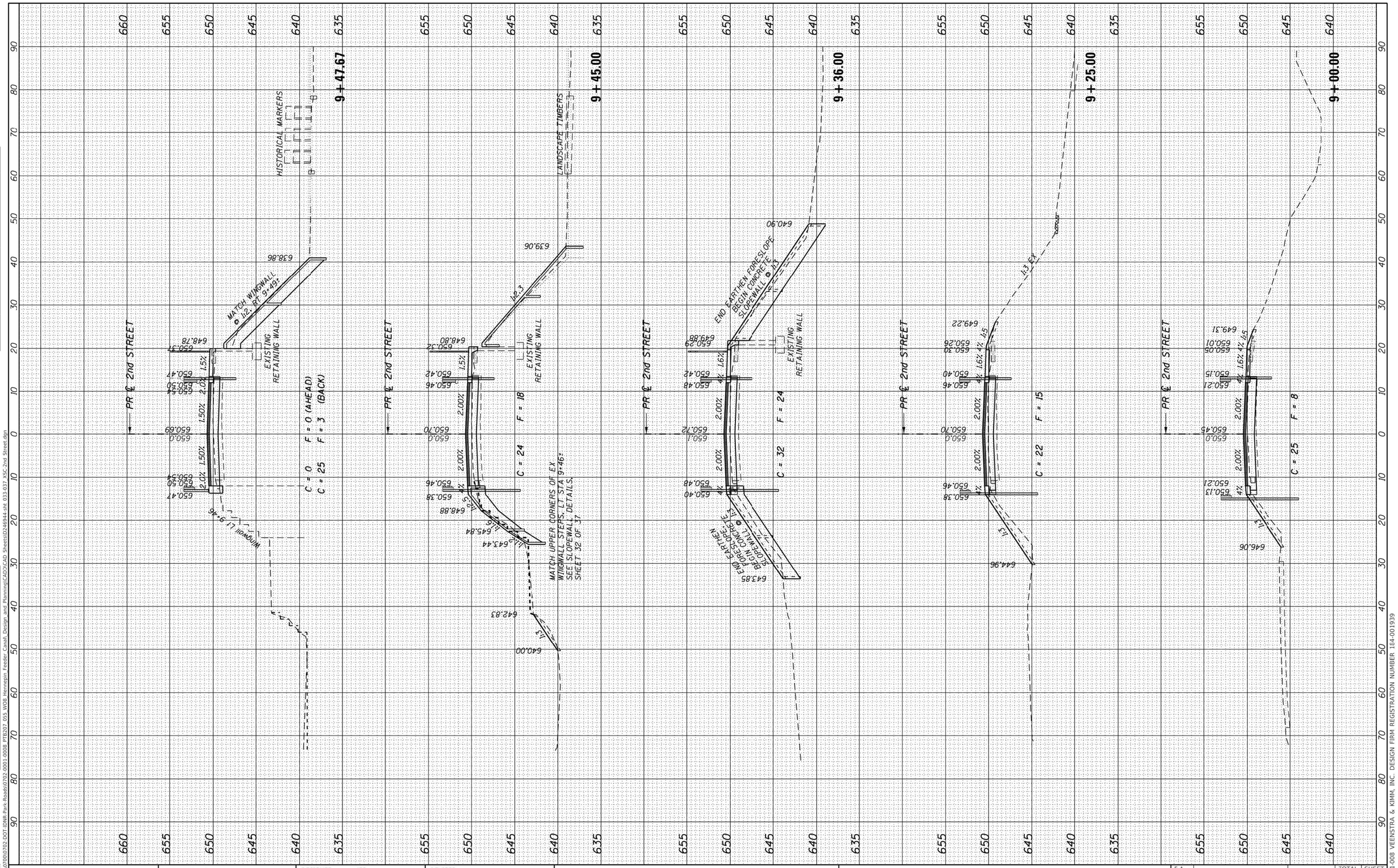

FINAL SURVEY		BY	DATE
NOTE BOOK	SURVEYED		
	PLOTTED		
	TEMPLATE		
	AREAS		
NO.	AREAS CHECKED		

ORIGINAL SURVEY		BY	DATE
NOTE BOOK	SURVEYED		
	PLOTTED		
	TEMPLATE		
	AREAS		
NO.	AREAS CHECKED		

MODEL: Default
FILE NAME: J:\0700\0702-DOT-IDNR-Park-Roads\0702-0001-0008_PTB207_055_W08_Hennepin_Feeder_Canal_Design_and_Planning\CAD2\CAD Sheets\D246944-sht_033-037_XSC-2nd Street.dgn

JOB No. 7021-008 VEENSTRA & KIMM, INC. DESIGN FIRM REGISTRATION NUMBER 184-001939

VEENSTRA & KIMM INC.
A Kleinfelder Company

USER NAME = jbegue	DESIGNED - JEB	REVISED -
	DRAWN - JEB	REVISED -
PLOT SCALE = 20.0000 ' / in.	CHECKED - RHD	REVISED -
PLOT DATE = 9/4/2025	DATE - 8-22-2025	REVISED -

STATE OF ILLINOIS
DEPARTMENT OF TRANSPORTATION

CROSS SECTIONS – 2nd STREET

SCALE: 10'H 5'V | SHEET 2 OF 5 SHEETS | STA. 9+00.00 TO STA. 9+47.67

F.A. RTE.	SECTION	COUNTY	TOTAL SHEETS	SHEET NO.
2nd St	HC BRIDGE REPAIR	WHITESIDE	37	34
		CONTRACT NO. 46944		
		ILLINOIS FED. AID PROJECT		

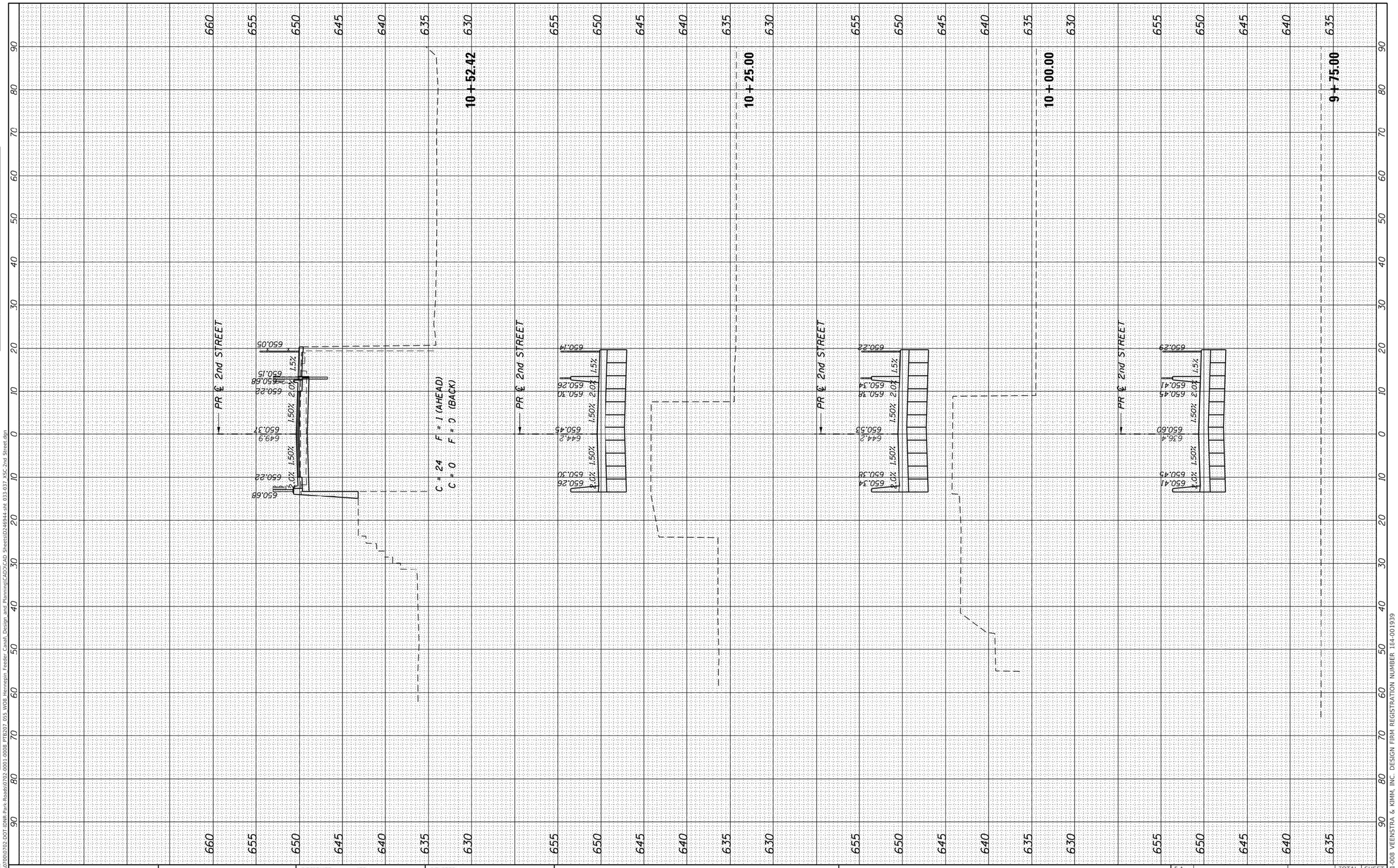

FINAL SURVEY		BY	DATE
NOTE BOOK	SURVEYED		
	PLOTTED		
	TEMPLATE		
	AREAS		
NO.	AREAS CHECKED		

ORIGINAL SURVEY		BY	DATE
NOTE BOOK	SURVEYED		
	PLOTTED		
	TEMPLATE		
	AREAS		
NO.	AREAS CHECKED		

MODEL: Default
FILE NAME: J:\0700\0702-DOT\DNR-Park Roads\0702-0001-0008 PTB207 055 WOB Hennepin Feeder Canal_Design and Planning\CAD\CAD Sheets\D246944-sht 033-037 XSC 2nd Street.dgn

JOB No. 7021-008 VEENSTRA & KIMM, INC. DESIGN FIRM REGISTRATION NUMBER 184-001939

VEENSTRA & KIMM INC.
A Kleinfelder Company

USER NAME = jbegue	DESIGNED - JEB	REVISED -
	DRAWN - JEB	REVISED -
PLOT SCALE = 20.0000 ' / in.	CHECKED - RHD	REVISED -
PLOT DATE = 9/4/2025	DATE - 8-22-2025	REVISED -

STATE OF ILLINOIS
DEPARTMENT OF TRANSPORTATION

CROSS SECTIONS – 2nd STREET

SCALE: 10'H 5'V | SHEET 3 OF 5 SHEETS | STA. 9+75.00 TO STA. 10+52.42

F.A. RTE.	SECTION	COUNTY	TOTAL SHEETS	SHEET NO.
2nd St	HC BRIDGE REPAIR	WHITESIDE	37	35

CONTRACT NO. 46944

ILLINOIS | FED. AID PROJECT

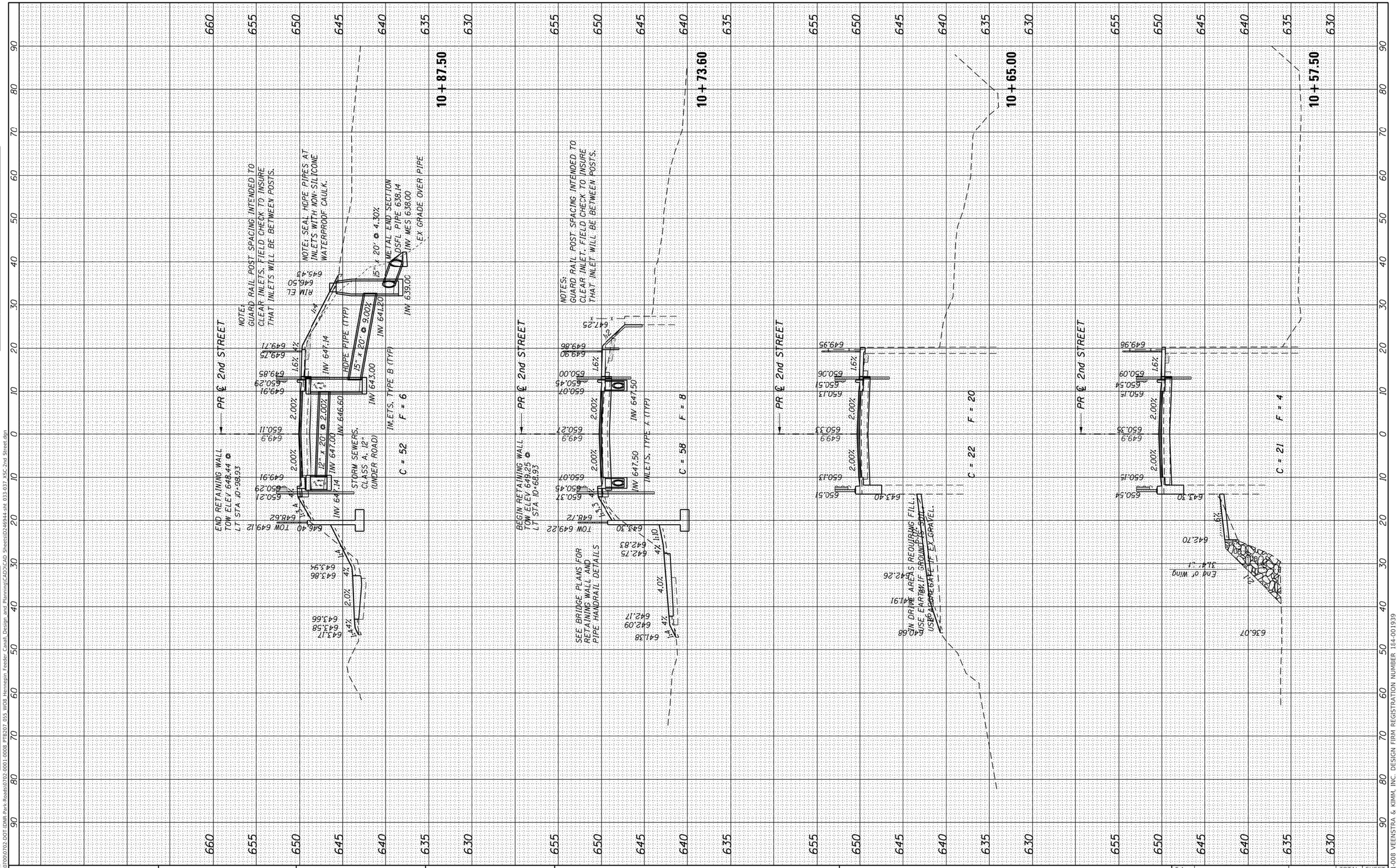

FINAL SURVEY
NOTE BOOK
NO.
SURVEYED
PLOTTED
TEMPLATE
AREAS
AREAS CHECKED
BY
DATE

ORIGINAL SURVEY
NOTE BOOK
NO.
SURVEYED
PLOTTED
TEMPLATE
AREAS
AREAS CHECKED
BY
DATE

MODEL: Default
FILE NAME: I:\0700\0702 DOT\DNR Park Roads\0702-0001-0008 PTB207 055 W08 Hennepin Feeder Canal\ Design and Planning\CADD\CAD Sheets\D246944-sht 033 037 XSC 2nd Street.dgn

VEENSTRA & KIMM INC.
A Kleinfelder Company

USER NAME = jbegue	DESIGNED - JEB	REVISED -	
	DRAWN - JEB	REVISED -	
PLOT SCALE = 20.0000 ' / in.	CHECKED - RHD	REVISED -	
PLOT DATE = 9/4/2025	DATE - 8-22-2025	REVISED -	

STATE OF ILLINOIS
DEPARTMENT OF TRANSPORTATION

CROSS SECTIONS – 2nd STREET

SCALE: 10'H 5'V | SHEET 4 OF 5 SHEETS | STA. 10+57.50 TO STA. 10+87.50

F.A. RTE.	SECTION	COUNTY	TOTAL SHEETS	SHEET NO.
2nd St	HC BRIDGE REPAIR	WHITESIDE	37	36

CONTRACT NO. 46944

ILLINOIS | FED. AID PROJECT

JOB No. 7021-008 VEENSTRA & KIMM, INC. DESIGN FIRM REGISTRATION NUMBER 184-001939

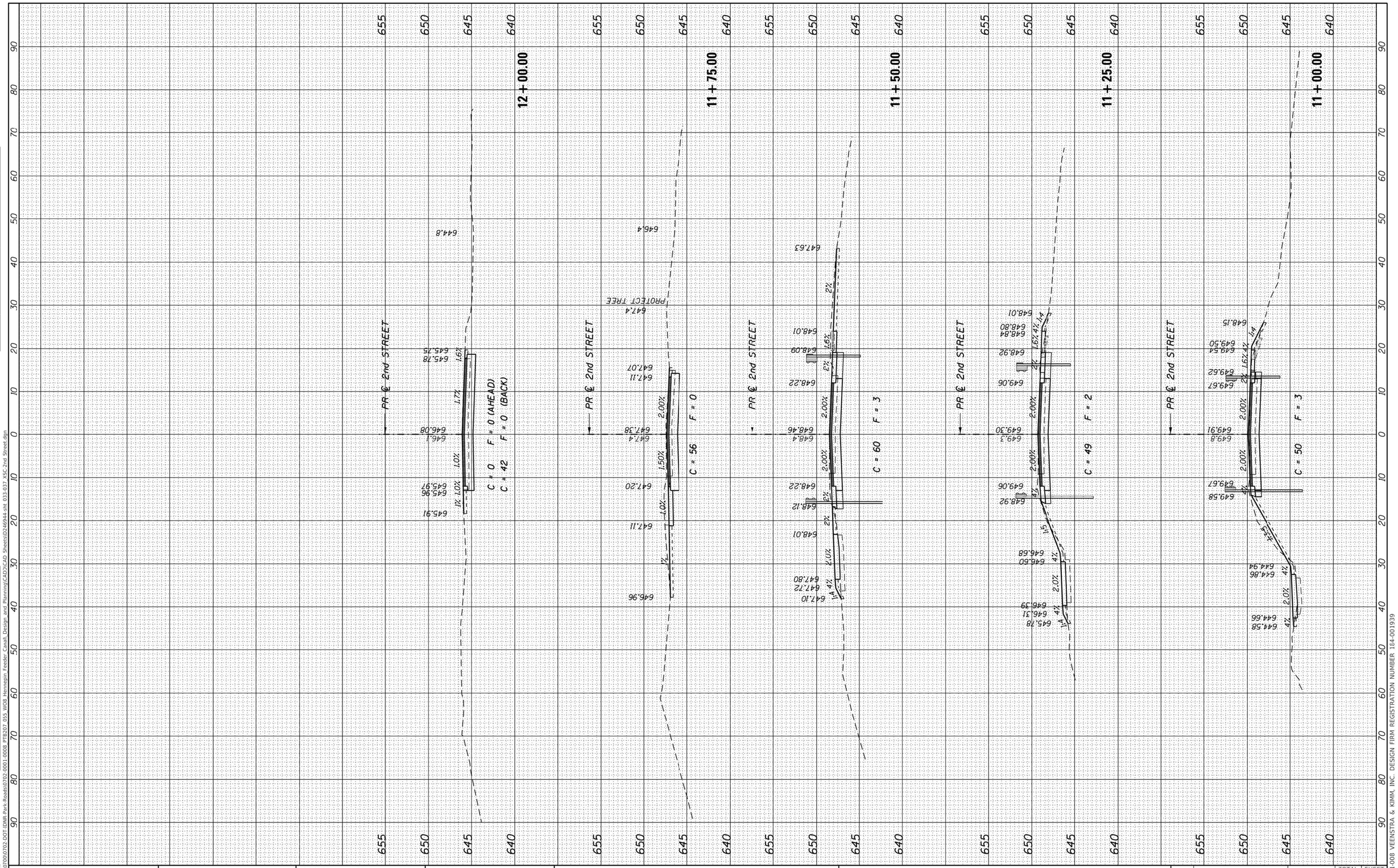

FINAL SURVEY		BY	DATE
NOTE BOOK	SURVEYED		
	PLOTTED		
	TEMPLATE		
	AREAS		
	AREAS CHECKED		

ORIGINAL SURVEY		BY	DATE
NOTE BOOK	SURVEYED		
	PLOTTED		
	TEMPLATE		
	AREAS		
	AREAS CHECKED		

MODEL: Default
FILE NAME: J:\0700\0702-DOT-IDNR-Park-Roads\0702-0001-0008_PTB207_055_WO8_Hennepin_Feeder_Canal_Design_and_Planning\CAD\CAD_Sheets\D246944-sht_033-037_XSC-2nd_Street.dgn

JOB No. 7021-008 VEENSTRA & KIMM, INC. DESIGN FIRM REGISTRATION NUMBER 184-001939

VEENSTRA & KIMM INC.
A Kleinfelder Company

USER NAME = jbegue	DESIGNED - JEB	REVISED -
	DRAWN - JEB	REVISED -
PLOT SCALE = 20.0000 ' / in.	CHECKED - RHD	REVISED -
PLOT DATE = 9/4/2025	DATE - 8-22-2025	REVISED -

STATE OF ILLINOIS
DEPARTMENT OF TRANSPORTATION

CROSS SECTIONS – 2nd STREET

SCALE: 10'H 5'V | SHEET 5 OF 5 SHEETS | STA. 11+00.00 TO STA. 12+00.00

RTE.	SECTION	COUNTY	TOTAL SHEETS	SHEET NO.
2nd St	HC BRIDGE REPAIR	WHITESIDE	37	37
		CONTRACT NO. 46944		
	ILLINOIS	FED. AID PROJECT		