CONTRACT NO. 66667

F.A.P. RTE.	SECTION	COUNTY	TOTAL SHEETS	SHEET NO.
607	129 BR	KENDALL	61	39
STA.		TO STA.		
FED. ROAD DIST. NO.	ILLINOIS	FED. AID PROJECT		

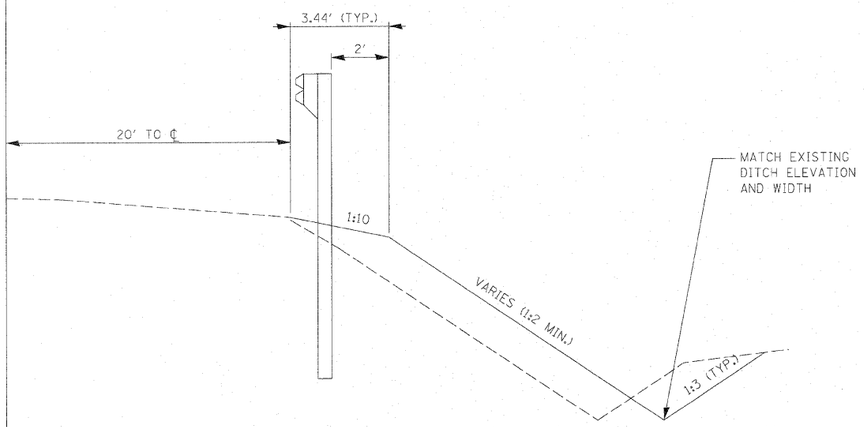

SHOULDER WIDENING FOR GUARDRAIL

SEE PLANS, CROSS SECTIONS
AND STANDARDS 630001 AND 630301
FOR OTHER DETAILS AND LOCATIONS

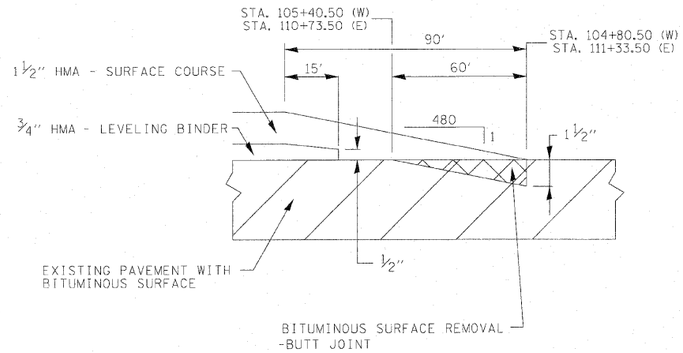

BITUMINOUS SURFACE REMOVAL
BUTT JOINT DETAIL – NOT TO SCALE

SEE STAGE CONSTRUCTION PLANS FOR LOCATIONS

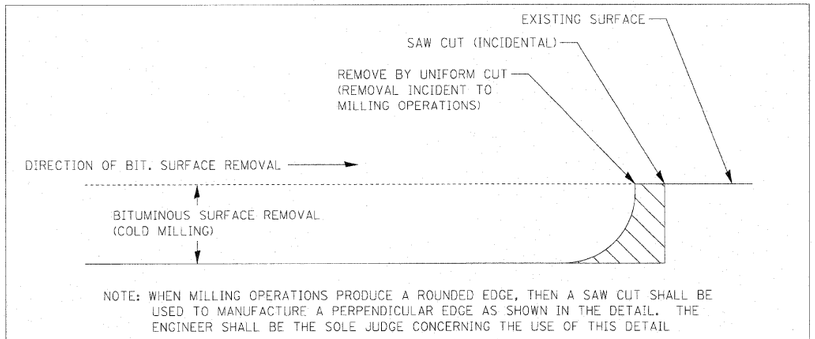

NOTE: WHEN MILLING OPERATIONS PRODUCE A ROUNDED EDGE, THEN A SAW CUT SHALL BE USED TO MANUFACTURE A PERPENDICULAR EDGE AS SHOWN IN THE DETAIL. THE ENGINEER SHALL BE THE SOLE JUDGE CONCERNING THE USE OF THIS DETAIL

BITUMINOUS DETAIL AT BUTT JOINTS

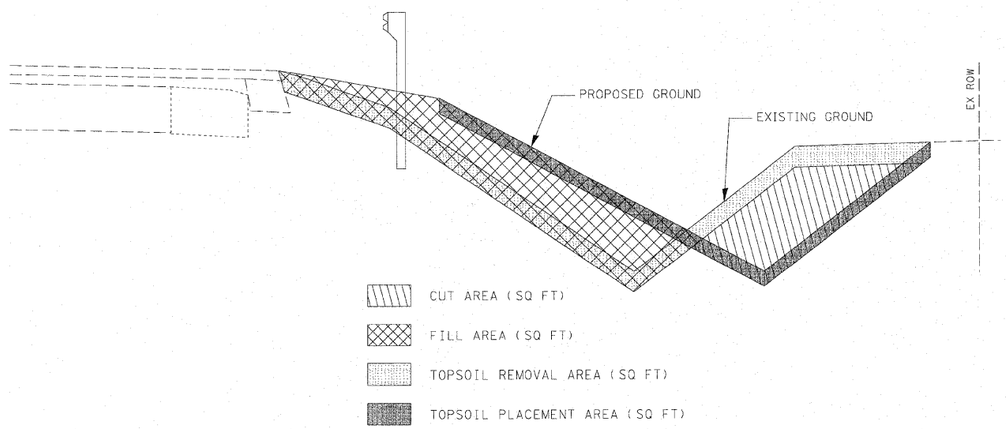

EARTHWORK QUANTITIES LEGEND

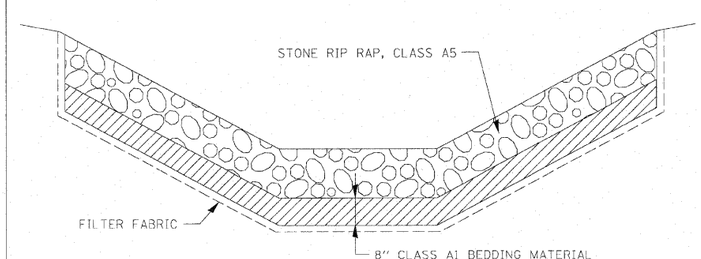

PLACEMENT OF RIPRAP ALONG CREEK

REVISIONS	
NAME	DATE

ILLINOIS DEPARTMENT OF TRANSPORTATION

DETAILS

SCALE: VERT. NOT TO SCALE
HORIZ. NOT TO SCALE
DATE 10/17/2007

DRAWN BY C. SUNTKEN
CHECKED BY M. ZELINSKAS

PLOT DATE = 10/17/2007
FILE NAME = K:\DEPT\\66671_INF.dgn Dab 12-29-06\DETAIL.dgn
PLOT SCALE = 50.0000 (1 IN. = 50.0000 FEET)
USER NAME = USER1