EARTH TECH — A tyco INTERNATIONAL LTD. COMPANY	F.A.U. RTE.	SECTION	COUNTY	TOTAL SHEETS	SHEET NO.
	1463	1010.1B	COOK	171	91
	STA.		TO STA.		
	FED. ROAD DIST. NO.	ILLINOIS	FED. AID PROJECT		

CONTRACT NO. 62196
S16 of S30

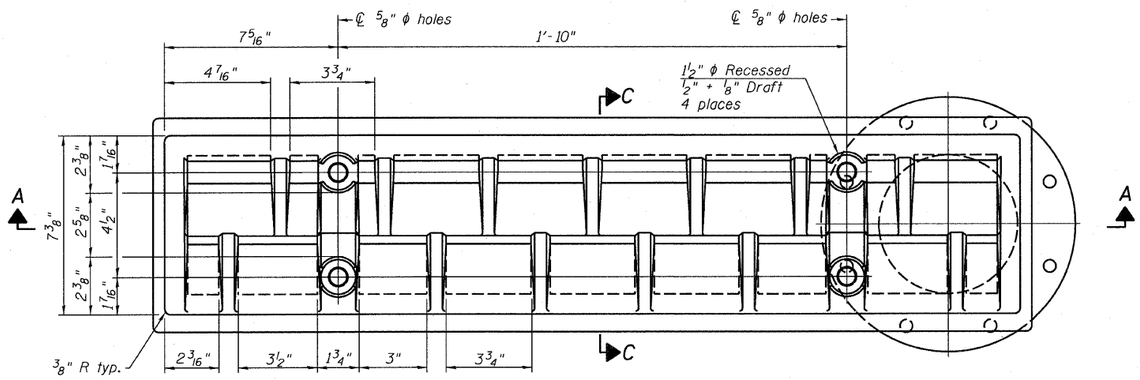

PLAN

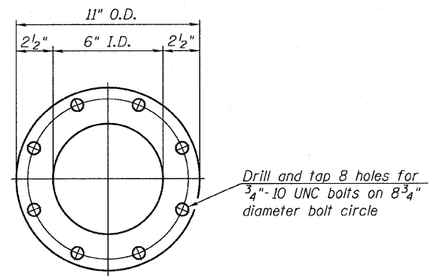

VIEW B-B

Notes:

All cast iron parts shall be gray iron conforming to the requirements of AASHTO M 105, Class 35B.

Bolts, anchor studs, washers and nuts shall conform to the requirements of ASTM A 307 and shall be galvanized according to AASHTO M 232.

Downspouts located on the exterior side of a painted steel fascia beam shall be painted with the finish coat specified for the exterior side of the fascia beam.

As an alternate, bolts, anchor studs, washers and nuts may be stainless steel according to Article 1006.29(d) of the Standard Specifications.

Structural steel weldments of equal sections and of the same configuration may be substituted for the cast iron scupper frame. Fillet or full penetration welds shall be used for the weldments. Details shall be submitted to the Engineer for approval. Structural steel weldments shall not be substituted for the cast iron scupper grate. Structural steel frames and downspouts shall be galvanized according to AASHTO M111.

The Contractor shall take appropriate measures to assure that Protective Coat is not applied to the scupper.

Cost of the Grate, Frame, Downspout, Anchor Studs, Bolts, Washers and Nuts including complete installation of the scupper shall be paid for at the contract unit price each for Drainage Scupper, DS-33.

Alternate fiberglass downspout conforming to ASTM D 2996 with a short-time rupture strength hoop tensile stress of 30,000 psi min. may be used in lieu of the cast iron or steel equivalent.

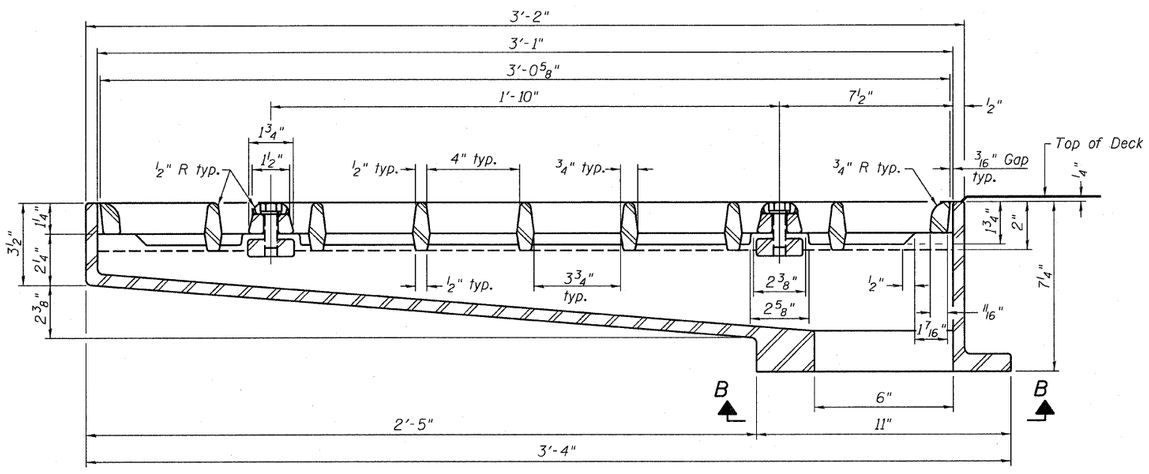

SECTION A-A

See sheet S11 of S29 for scupper location relative to parapet.

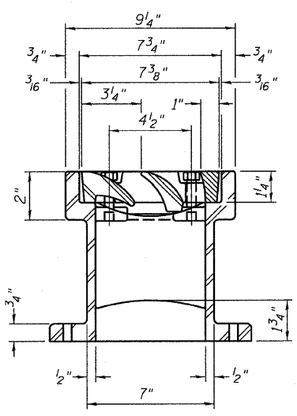

SECTION C-C

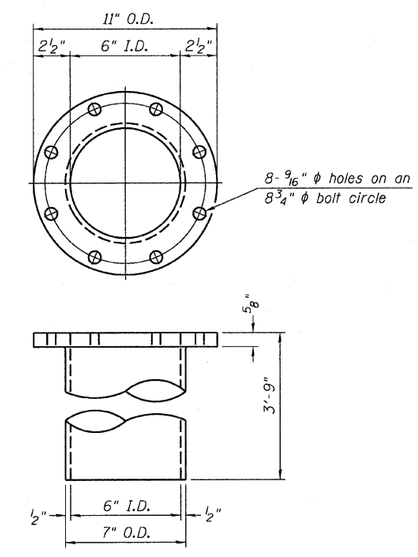

DOWNSPOUT

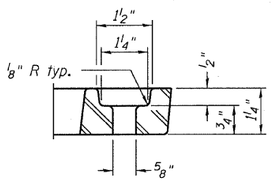

BOLT HOLE DETAIL

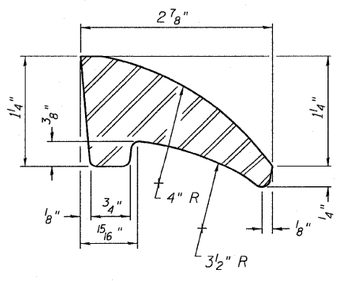

FIRST VANE DETAIL

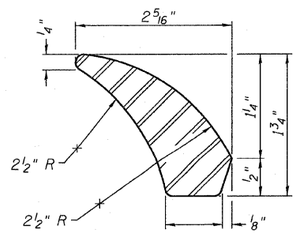

SECOND VANE DETAIL

BILL OF MATERIAL

Item	Unit	Total
Drainage Scuppers, DS-33	Each	8

REVISIONS	
NAME	DATE

ILLINOIS DEPARTMENT OF TRANSPORTATION

DRAINAGE SCUPPER DS-33

31 ST. STREET OVER M.J. & C.W.I.R.R.
F.A.U. ROUTE 1463 SECTION 159-1010.1B
COOK COUNTY
STATION 217+09.66
STR. NO. 016-0871

SCALE: VERT. HORIZ. — DRAWN BY JHR

DATE JANUARY 2008 — CHECKED BY CLS