FAI RTE.	SECTION	COUNTY	TOTAL SHEET SHEETS	NO.
I-80	*	WILL	181	

D-91-257-88

* 99-4RS-2 & 99(3B,4B-1,4HB-1,4VB)BR-88

STATE OF ILLINOIS
DEPARTMENT OF TRANSPORTATION
DIVISION OF HIGHWAYS

PLANS FOR PROPOSED
FEDERAL AID INTERSTATE HIGHWAY

FOR INDEX OF SHEETS, SEE SHEET NO. 2

SCALES
- PLAN — 1 INCH = * FEET
- PROFILE HORIZ. — 1 INCH = * FEET
- PROFILE VERT. — 1 INCH = * FEET
- CROSS SECTIONS — 1 INCH = * FEET HORIZONTAL; 1 INCH = * FEET VERTICAL

* SEE PLANS

F.A.I. ROUTE I-80
SECTION: 99-4RS-2 & 99(3B, 4B-1, 4HB, 4HB-1, 4VB)BR-88
WILL COUNTY
C-91-169-88
DESPLAINES RIVER TO RICHARD STREET

CITY OF JOLIET

SECTION NUMBERS 99-3B-BR(88) AND SECTION NUMBER 99-4RS-2 & 99-4(B-1, HB, HB-1, VB)BR-88 HAVE BEEN REVISED TO SECTION NUMBER 99-4RS-2 & 99(3B, 4B-1, 4HB, 4HB-1, 4VB)BR-88

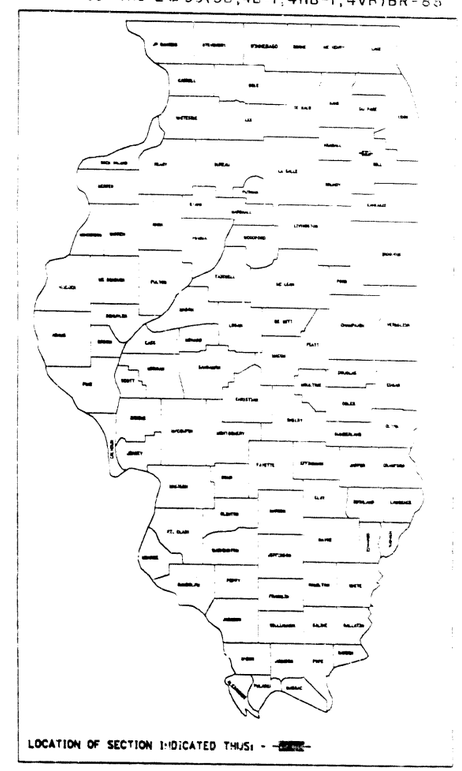

LOCATION OF SECTION INDICATED THUS: -

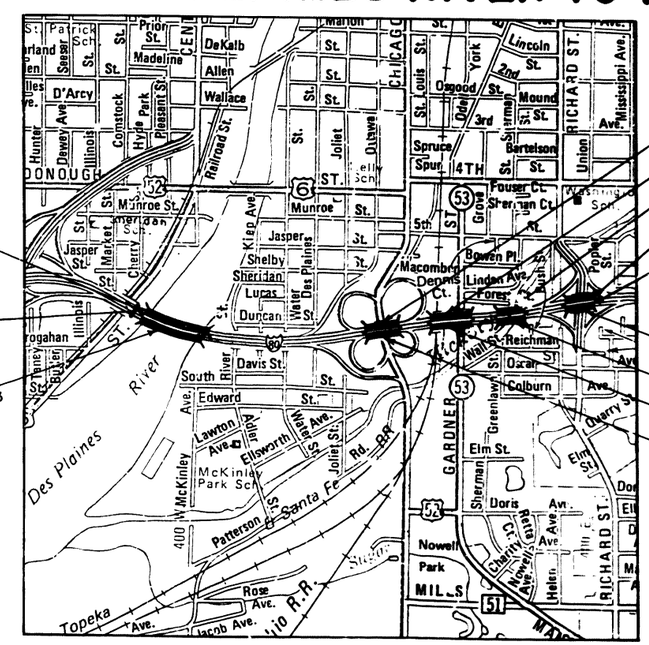

IMROVEMENT BEGINS
STA.379+04(WB)
STA.378+72(E.B.)

STRUC. NO.0099-0056
STA.379+64.57 TO 402+34

STRUC. NO.0099-0057
STA.379+34.27 TO 402+74.03

STRUC. NO.0099-0058
STA.413+88.93 TO 415+68.53

STRUC. NO.0099-0061
STA.420+44.78 TO 425+21.84

STRUC. NO.0099-0063
STA.429+59.91 TO 432+25.33

STRUC. NO.0099-0065
STA.439+14.09 TO 440+79.84

IMPROVEMENT ENDS
STA. 440+79.84

STRUC. NO.0099-0064
STA.439+04.41 TO 440+71.37

STRUC. NO.0099-0062
STA. 429+32.62 TO 431+98.04

STRUC. NO.0099-0060
STA. 420+24.46 TO 425+07.87

STRUC. NO.0099-0059
STA.414+00.94 TO 415+80.55

N

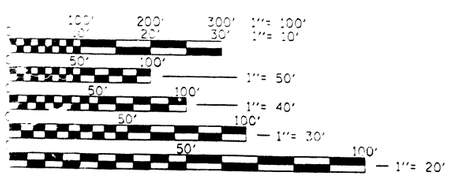

FULL SIZE PLANS HAVE BEEN PREPARED USING STANDARD ENGINEERING SCALES. REDUCED SIZED PLANS WILL NOT CONFORM TO STANDARD SCALES. IN MAKING MEASUREMENTS ON REDUCED PLANS, THE ABOVE SCALES MAY BE USED.

NET LENGTH OF W.B. = 6,17[illegible] FT. = [illegible] MILES

NET LENGTH OF E.B. = 6205.84 = 1.175 MILES

STATE OF ILLINOIS
DEPARTMENT OF TRANSPORTATION
DIVISION OF HIGHWAYS

SUBMITTED _____ 19__
ASSISTANT ENGINEER

EXAMINED _____ 19__
ENGINEER OF PLANS AND CONTRACTS

PASSED _____ 19__
ENGINEER OF DESIGN

APPROVED _____ 19__
DIRECTOR, DIVISION OF HIGHWAYS

CONTRACT NO. 80194

LOCATION MAP

COUNTY: WILL FAI ROUTE: I-80 SECTION: 99-4RS-2 & 99(3B,4B-1,4HB,4HB-1,4VB)BR-88

F.A. RTE.	SECTION	COUNTY	TOTAL SHEETS	SHEET NO.
I-80	*	WILL	181	120
STA.		TO STA.		
FED. ROAD DIST. NO. 7	ILLINOIS	FED. AID PROJ. NO.		

*99-4RS-2 & 99-4(B-1,HB,HB-1 & VBER 8)

SHEET 1 OF 14

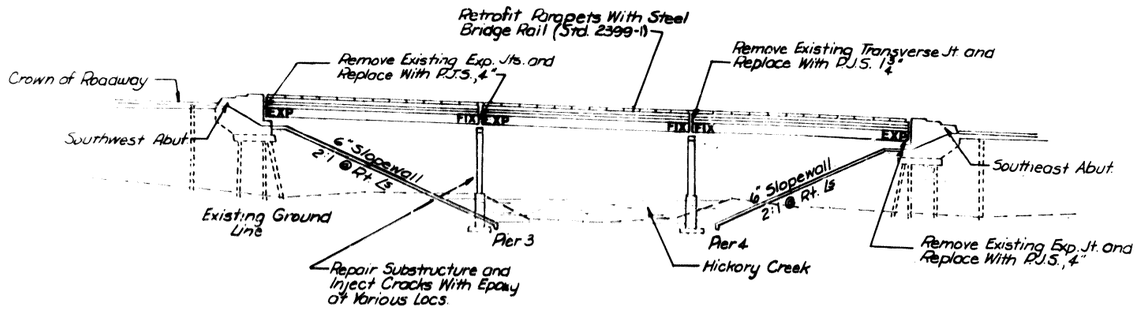

ELEVATION

N

EXISTING BRIDGE DESCRIPTION

The Bridge is a 3-Span, Continuous Steel Wide Flange Structure. The 7-Inch-Thick Deck is Supported on Reinforced Concrete Piers and Abutments. Typically, Steel Piles Support the Abutments and Creosoted Timber Piles Support the Approach Slabs at Each End. (See Note Below.)

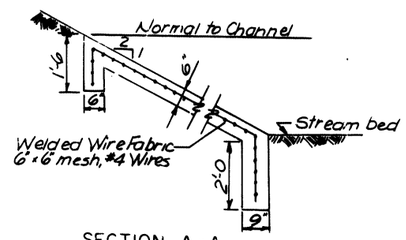

SECTION A-A

REPAIRS OVER ENTIRE DECK:

1. Remove Exist. Asphaltic Concrete Overlay
2. DELETED
3. Apply Waterproofing Membrane System
4. Overlay With Bituminous Concrete Surface Course, Mix E, Cl 1, 2", T-1.

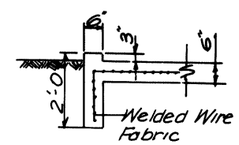

SECTION B-B

Note:

Abutments and Piers are Parallel to ℄ Hickory Creek. ℄ F.A.I. 80 and P.G.L. Eastbound and Westbound Rdwys. on Tangent and Parallel to Each Other.

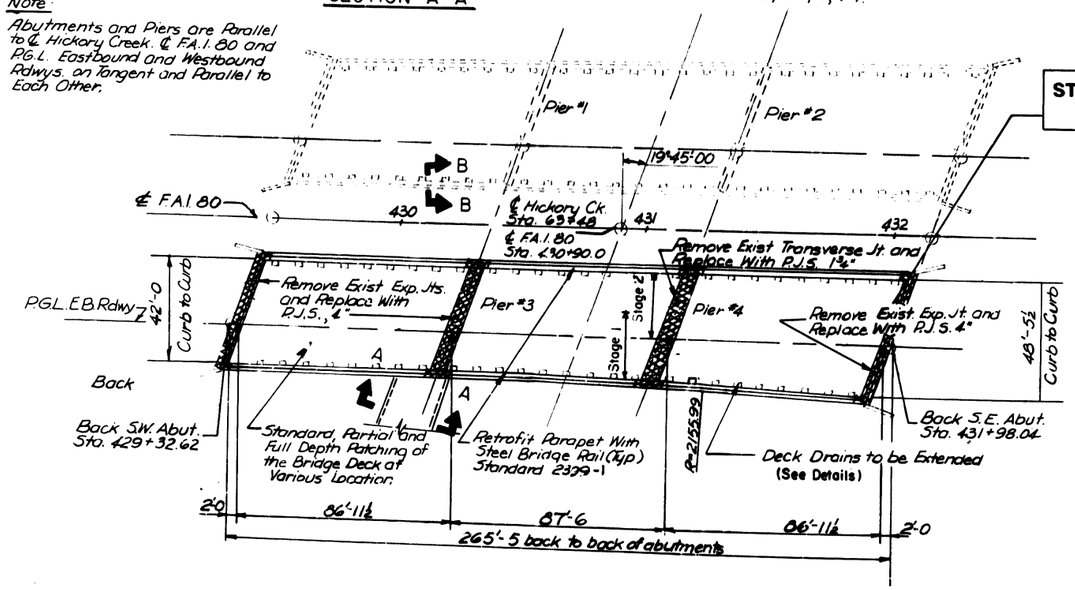

PLAN

STRUCTURE NO 099-0062
EASTBOUND

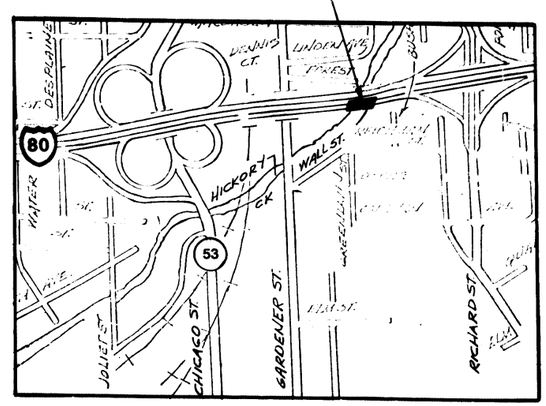

LOCATION MAP

PLAN NOTES

Plan dimensions and details relative to the the existing structure have been taken from existing plans and are subject to nominal construction variations. It shall be the contractor's responsibility to verify such dimensions and details in the field and make necessary, approved adjustments prior to construction or ordering of materials. Such variations shall not be cause for additional compensation for a change in scope of work, however, the contractor will be paid for the quantity actually furnished at the unit price bid for the work.

The contractor must use extreme care when doing concrete removal as not to nick, cut, or damage any of the structural steel.

Reinforcement bars shall conform to the requirements of A.A.S.H.T.O. M-42, M-31 or M-53 Grade 60.

For pavement markings on bridge, see roadway plans.

All contact surface areas of new and existing structural steel shall be free of paint or laquer.

All structural steel beneath expansion joints shall be sandblasted and repainted; 5' on either side at abutments and 10' on either side at piers.

Field welding of construction accessories will not be permitted to the bottom flange of beams or girders, nor to the top flange for a distance equal to ¼ the span length each way from the pier supports. Field Welding in other areas will be permitted only when approved by the Engineer.

All drainage structures located in the ditch paved of the slopewall shall be cleaned.

The exact location of slopewall Removal and Replacement shall be determined by the field engineer.

The 3-coat lead and chromatic free alkyd paint system shall be used for field painting of existing structural steel and new structural steel. The color of the final finish coat shall be Interstate Green (Munsell 7.5G 4/8) on fascia beams (visible from expressway) and Light Grey (Munsell 10 YR 7/1) on all interior beams. See Special Provision for "Cleaning and Painting Steel Bridge."

INDEX OF SHEETS

SHEET NO.	
1	Plan and Elevation
2	Typical Section
3	Stage Construction
4-10	Deck Details
11	Elastomeric Bearings
12-13	Substructure Repairs
14	Anchor Bolt Details For Bearings

REVISIONS	
NAME	DATE

ILLINOIS DEPARTMENT OF TRANSPORTATION

F.A.I.-80
BRIDGE REHABILITATION
STRUCTURE NO. 099-0062

PLAN & ELEVATION

SCALE VERT. HORIZ. DRAWN BY
DATE CHECKED BY

F.A. RTE.	SECTION	COUNTY	TOTAL SHEETS	SHEET NO.
80	*	WILL	181	121
STA.		TO STA.		
FED. ROAD DIST. NO. 7	ILLINOIS	FED. AID PROJECT		

*99-4RS-2 & 99-4(B-1, HB, HB-1 & VB)BR-88

SHEET 2 OF 14

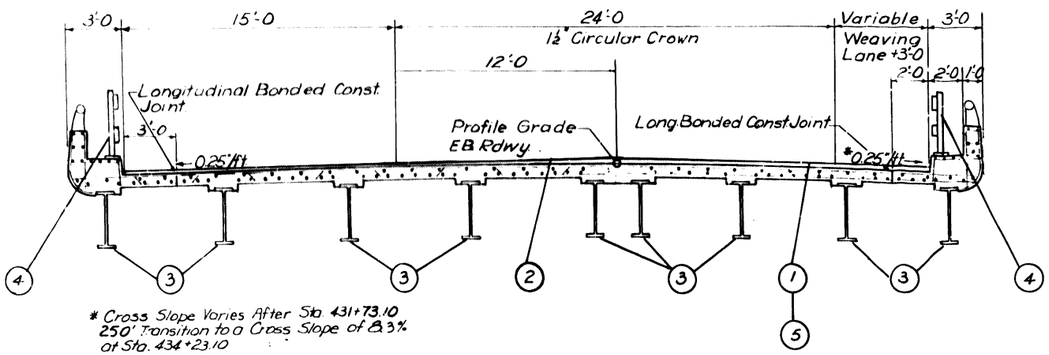

* Cross Slope Varies After Sta 431+73.10
250' Transition to a Cross Slope of 8.3%
at Sta. 434+23.10

TYPICAL CROSS SECTION

(Facing East)

LEGEND

1. Removal of Existing Asphaltic Concrete
2. Standard, Partial and Full Depth Patching of the Bridge Deck at Various Locations.
3. Jack and Remove Existing Bearings at Abutments; Furnish and Install Elastomeric Bearing Assembly, Type I
4. Retrofit Parapets With a Steel Bridge Railing (Std. 2399-1)
5. Waterproof Deck With Membrane System; Place 2" Bituminous Conc. Surface, Mix E, CL I, T-1

TOTAL BILL OF MATERIALS

ITEM	UNIT	QUANTITY Substructure	Superstructure	TOTAL
JACK & REMOVE EXIST. BEARINGS	EACH		18	18
ELASTOMERIC BEARING ASSEMBLY, TYPE I	EACH		18	18
FURNISH AND ERECT STRUCTURAL STEEL	**POUND**		12 239	12 239
CONCRETE REMOVAL	CU.YD.		24	24
CLASS X CONCRETE SUPERSTRUCT.	CU.YD.		27.2	27.2
PREFORMED JOINT SEAL 1¾"	LIN.FT.		53	53
PREFORMED JOINT SEAL 4"	LIN.FT.		160	160
STEEL BRIDGE RAIL	**LIN.FT.**		524	524
REINFORCEMENT BARS EPOXY COATED	POUNDS		4808	4808
WATERPROOF MEMBRANE SYSTEM	SQ.YD		1285	1285
DECK DRAIN TO BE EXTENDED	EACH		42	42
DECK SLAB REPAIR (Partial)	SQ. YD.		73.6	7
DECK SLAB REPAIR (Full Depth) T.I	SQ.YD.		7.8	7.8
SLOPEWALL REM. & REPL.	**SQ. YD**			**25**
PROTECTIVE COAT	SQ.YD.		112	112
EPOXY CRACK SEALING	LIN.FT.	80		80
FORMED CONC. REPAIR (DEPTH ≤ 5")	SQ.YD.	20		20
BIT. CONC. SURF. REMOVAL (Deck)	SQ.YD.		1285	1285
BIT. CONC. SURF. CSE, MIX E, CL I, 2", T-1	TONS		**168**	**168**
CLEAN & PAINT STEEL BRIDGE	L.SUM			.16
DRAINAGE STRUCTURE TO BE CLEANED	**EACH**			2

REVISIONS	
NAME	DATE

ILLINOIS DEPARTMENT OF TRANSPORTATION
F.A.I.-80
BRIDGE REHABILITATION
STRUCTURE NO. 099-0062

TYPICAL CROSS SECTION

SCALE: VERT / HORIZ
DATE
DRAWN BY CP
CHECKED BY

F.A.I. NO.	SECTION	COUNTY	TOTAL SHEETS	SHEET NO.
I-80	*	WILL	181	122
STA		TO STA		

*99-4RS-2 & 99-4(B-1,HB,HB-1&VB)BR-66

SHEET 3 OF 14

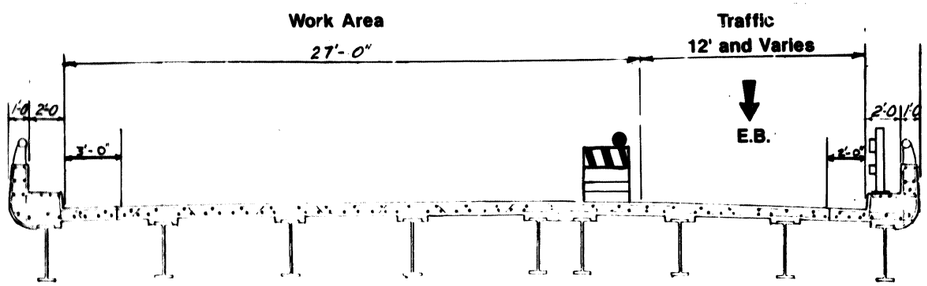

STAGE II
(Facing East)

STAGE I

1. PLACE TRAFFIC CONTROL AND DIVERT TRAFFIC TO NORTH SIDE.
2. REMOVE EXISTING BRIDGE CONCRETE OVERLAY
3. CONSTRUCT PARTIAL AND FULL DEPTH SLAB REPAIRS
4. JACK BRIDGE AND REMOVE EXISTING BEARINGS AND INSTALL PROPOSED ELASTOMERIC BEARING ASSEMBLY.
5. EXTEND DECK DRAINS
6. REPLACE TRANVERSE JOINTS
7. PAINT STRUCTURAL STEEL (5' ON EITHER SIDE OF BEARINGS AT ABUTMENTS AND 10' ON EITHER SIDE OF THE BEARINGS AT THE PIERS)
8. REPAIR SUBSTRUCTURE
9. RETROFIT THE SAFETY CURBS BY PLACING A BRIDGE STEEL RAIL (STANDARD 2399-1)
10. APPLY WATERPROOFING MEMBRANE AND RESURFACE BRIDGE

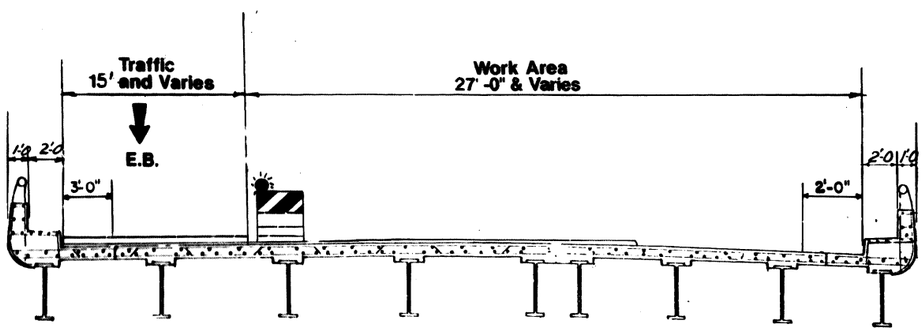

STAGE I.
(Facing East)

STAGE II

1. PLACE TRAFFIC CONTROL AND DIVERT TRAFFIC TO SOUTH SIDE.
2. REMOVE EXISTING BRIDGE CONCRETE OVERLAY AND PERFORM
3. CONSTRUCT PARTIAL AND FULL DEPTH SLAB REPAIRS
4. JACK BRIDGE AND REMOVE EXISTING BEARINGS AND INSTALL PROPOSED ELASTOMERIC BEARING ASSEMBLY.
5. EXTEND DECK DRAINS
6. REPLACE TRANVERSE JOINTS
7. PAINT STRUCTURAL STEEL (5' ON EITHER SIDE OF BEARINGS AT ABUTMENTS AND 10' ON EITHER SIDE OF THE BEARINGS AT THE PIERS.
8. REPAIR SUBSTRUCTURE
9. RETROFIT THE SAFETY CURBS BY PLACING A BRIDGE STEEL RAIL (STANDARD 2399-1)
10. APPLY WATERPROOFING MEMBRANE AND RESURFACE BRIDGE

REVISIONS	
NAME	DATE

ILLINOIS DEPARTMENT OF TRANSPORTATION
F.A.I.-80
BRIDGE REHABILITATION
STRUCTURE NO. 099-0062
STAGE CONSTRUCTION

SCALE: VERT. HORIZ. DRAWN BY
DATE CHECKED BY

F.A. RTE.	SECTION	COUNTY	TOTAL SHEETS	SHEET NO.
I-80	*	WILL	181	123
STA.	TO STA.			
FED. ROAD DIST. NO. 7	ILLINOIS	FED. AID PROJECT		

#99-4R5-2 & 99-4(B-1, HB, HB-1 & VB) BR-88

SHEET 4 OF 14

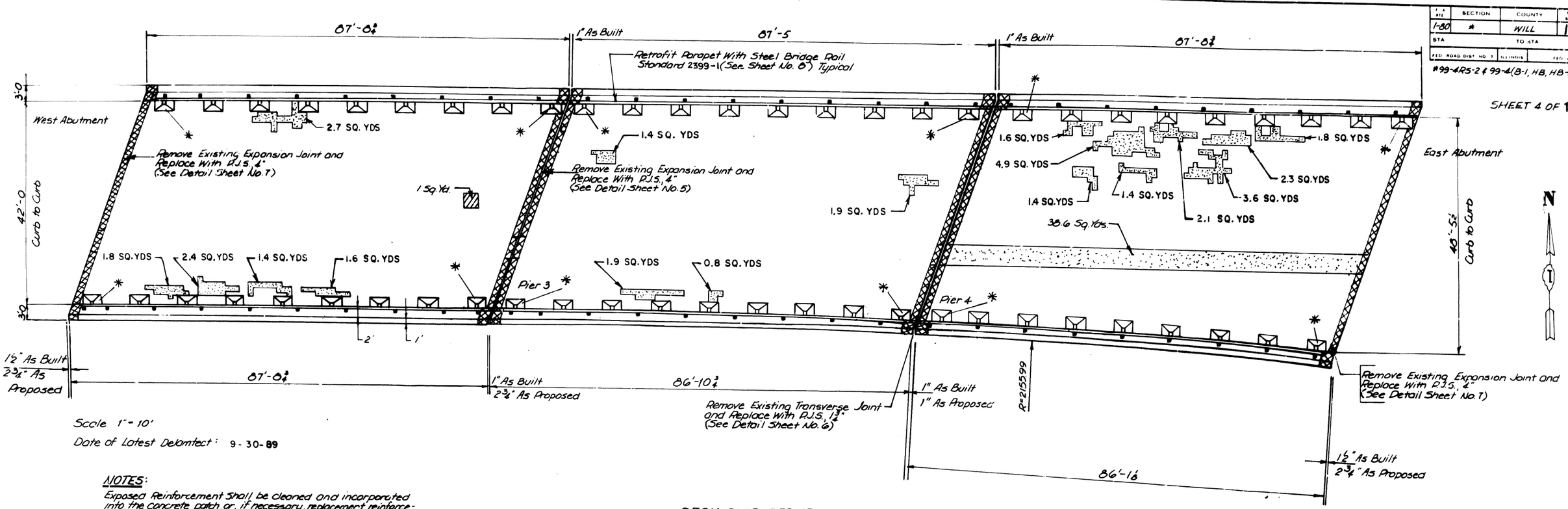

Scale 1" = 10'

Date of Latest Delantect: 9-30-89

DECK SLAB REPAIR

NOTES:

Exposed Reinforcement Shall be cleaned and incorporated into the concrete patch, or, if necessary, replacement reinforcement added and spliced with the existing, retained reinforcement, AS DIRECTED BY THE ENGINEER.

Repairs over the entire deck area are:

1. Remove existing bituminous concrete overlay.
2. DELETED
3. Preform standard, partial and full-depth patching as shown.
4. Waterproof the deck with a membrane system.
5. Resurface the deck with Bituminous Concrete Surface Course, Mix E, CL I, 2", T-1.

Unless otherwise stated, dimensions shown are as built.

LEGEND

- Deck Slab Repair (Partial Depth)
- Deck Slab Repair (Full Depth)
- Concrete Removal

Removal of existing deck drain is incidental to the pay item of "Deck Slab Repair, Full Depth".

Removal of existing deck drain & repair of deck to be paid for at the contract unit per Sq. Yd. for Deck Slab Repair (Full Depth) use 0.4 S.Y. per location.

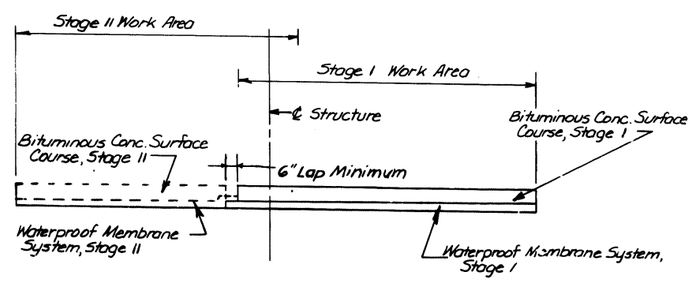

DETAIL OF WATERPROOF MEMBRANE SYSTEM

(6" Lap)

BILL OF MATERIALS

ITEM	UNIT	QUANTITY
Bit. Conc. Surf. Cse., Mix E*, CL I, 2"	Tons	168
Waterproof Membrane System	Sq. Yds.	1285
Deck Slab Repair (Partial Depth)	Sq. Yds.	73.6
Deck Slab Repair (Full Depth) T-1	Sq. Yds.	7.8
Bit. Conc. Surface Removal	Sq. Yds.	1285

*Mix E = 150 lbs./Sq. Yd./Inch Depth

* DECK DRAINS WITHIN 10 FT. OF THE SUBSTRUCTURE ARE TO BE ELIMINATED. ALL OTHER DECK DRAINS ARE TO BE EXTENDED. (SEE DETAIL SHEET NO. 9)

REVISIONS	
NAME	DATE

ILLINOIS DEPARTMENT OF TRANSPORTATION

FAI-80
BRIDGE REHABILITATION
STRUCTURE NO. 099-0062

DECK SLAB REPAIR

SCALE: VERT. HORIZ. DRAWN BY

DATE CHECKED BY

F.A. RTE.	SECTION	COUNTY	TOTAL SHEETS	SHEET NO.
I-80	*	WILL	181	124

STA. TO STA.

FED. ROAD DIST. NO. 7 | ILLINOIS | FED. AID PROJECT

* 99-4RS-2 & 99-4(B-1,HB,HB-18,VB)BR-88

SHEET 5 OF 14

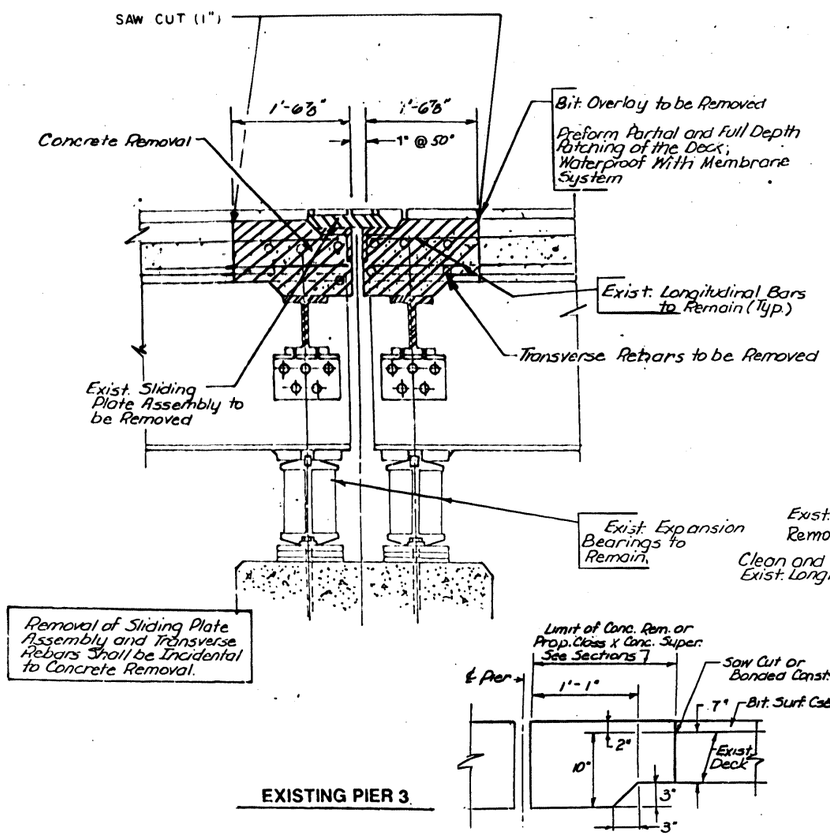

EXISTING PIER 3

TYPICAL DECK DIMENSIONS

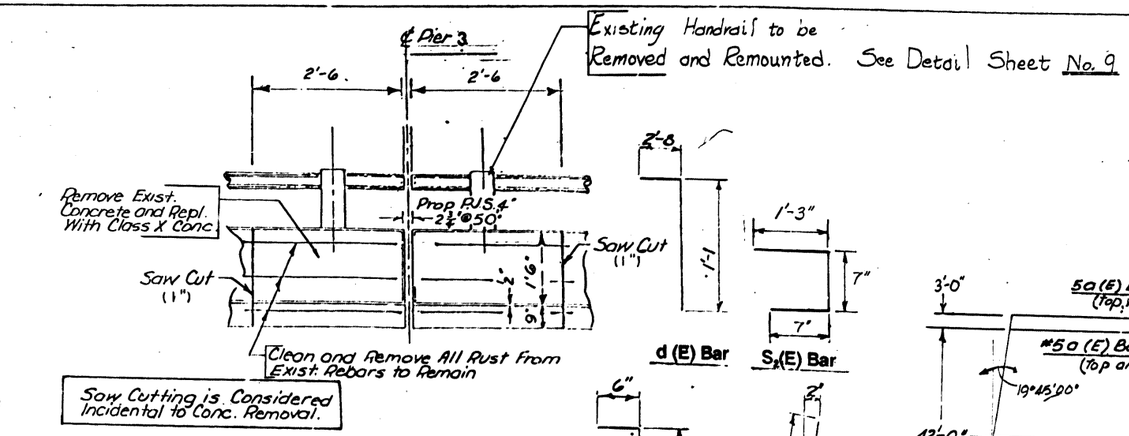

ELEVATION AT PARAPET

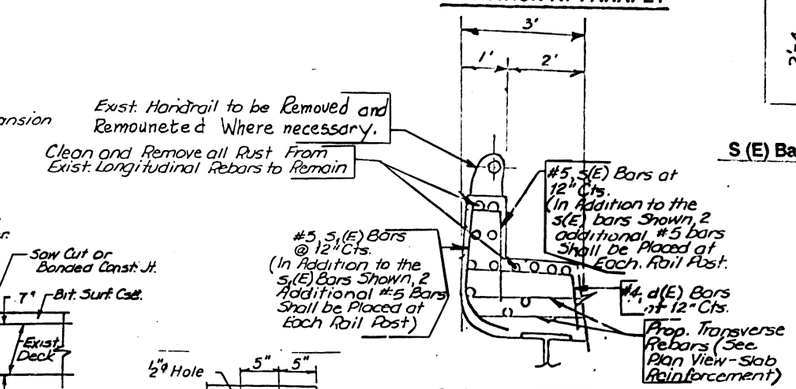

SECTION AT PARAPET

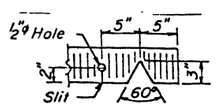

SEAL CUT-OUT (4")

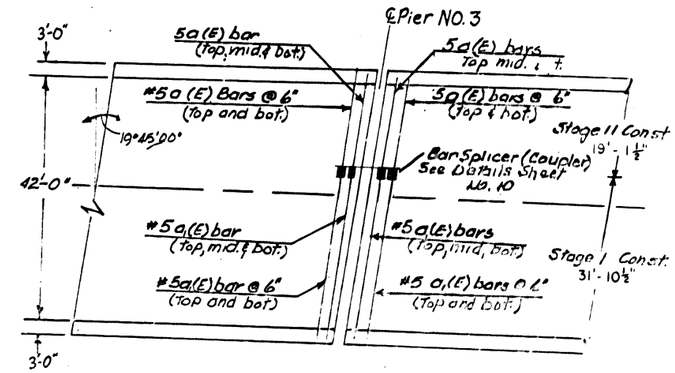

PLAN VIEW - SLAB REINFORCEMENT

NOTES:

1. Clearance Shall be Maintained for Slab Reinforcement. (2" CLEAR FOR TOP OF SLAB & 1" CLEAR FOR BOTTOM OF SLAB)
2. Quantities Have Been Provided for a Third Row of Bars (as Shown), However, This Quantity May or May Not be Needed. Its Necessity Shall Be Determined in the Field, by Whether or Not the Third Row of Existing Rebars is Exposed or Hampers Saw Cutting, or At the Discretion of the Field Engineer. The Amount of Concrete Removal Shall be as Shown on the Plans.
3. See Parapet Joint Detail on Sheet 6.

BAR SCHEDULE

BAR	NO. REQ'D	SIZE	LENGTH	SHAPE
a(E)	14	#5	18'-8½"	—
a₁(E)	14	#5	31'-6"	—
s(E)	20	#5	2'-10"	⌉
s₁(E)	20	#5	3'-6"	L
s₂(E)	73	#4	2'-5"	⌉
d(E)	12	#4	3'-9"	⌉

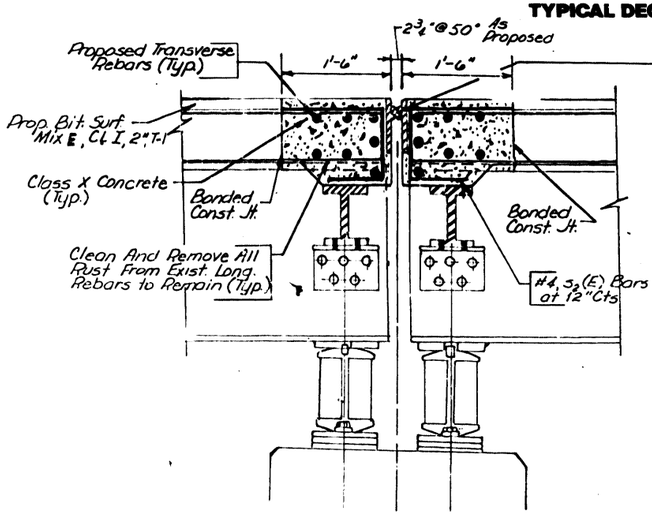

PROPOSED MODIFICATIONS AT PIER 3

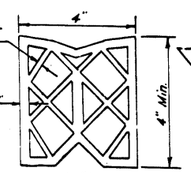

P.J.S.4"

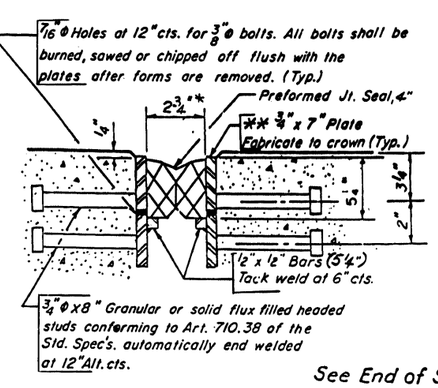

PREFORMED JOINT SEAL, 4"

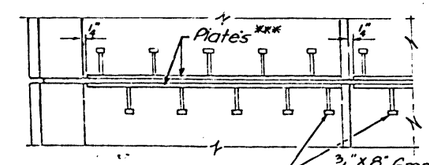

PLAN AT SAFETY CURB

¾" x 8" Granular or Solid Flux Filled Headed Studs Conforming to Art. 710.38 of the Std. Specs Automatically End Welded at 12" Alt. Cts.

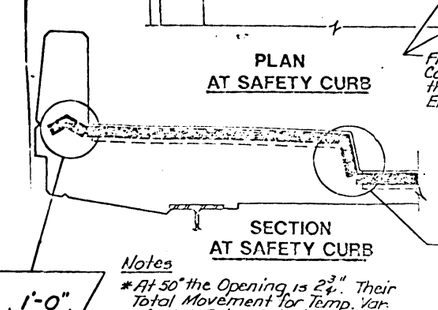

SECTION AT SAFETY CURB

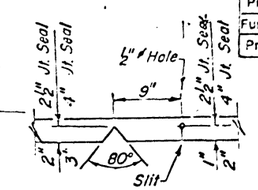

SEAL CUT-OUT at CURB

See End of Seal Cut-Out Detail

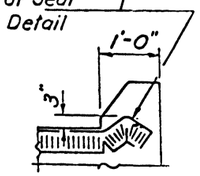

END OF SEAL TREATMENT

Notes

* At 50° the Opening is 2¾". Their Total Movement for Temp. Var. of -30° F to 130° F is Shown on Sheet 8.

** Furnish in Segments of 20' Max. Length. Max Space Between Installed Segments Shall be 3/16" Seal Space With Silicone Sealant Suitable for Structural Steel.

After Fabrication All Surfaces of the Steel Plates Shall be Given One Shop Coat of Paint Specified for Structural Steel.

*** Cut Retainer Bars in Sidewalk 6" Short of Sidewalk Face

BILL OF MATERIALS

ITEM	UNIT	QUANTITY
Concrete Removal	Cu. Yds.	5.9
Class X Conc. Super.	Cu. Yds.	6.7
Reinforcement Bars, Epoxy Ctd.	Pound	1303
Preformed Joint Seal, 4"	Lin. Ft.	51.0
Furnish. and Erect. Struct. Steel	Pound	1854
Protective Coat	Sq. Yd.	23.8

DETAIL OF EXPANSION JOINT REPLACEMENT AT PIER NO. 3

REVISIONS	
NAME	DATE

ILLINOIS DEPARTMENT OF TRANSPORTATION

F.A.I. 80

BRIDGE REHABILITATION

STRUCTURE NO. 099-0092

DECK DETAILS

SCALE VERT. HORIZ. | DRAWN BY

DATE | CHECKED BY

F.A. RTE.	SECTION	COUNTY	TOTAL SHEETS	SHEET NO.
I-80	*	WILL	181	125
STA.		TO STA		
FED. ROAD DIST. NO. 7	ILLINOIS	FED. AID PROJECT		

*99-4RS-2 & 99-4(B-1,HB,HB-1)VB)BR-08

SHEET 6 OF 14

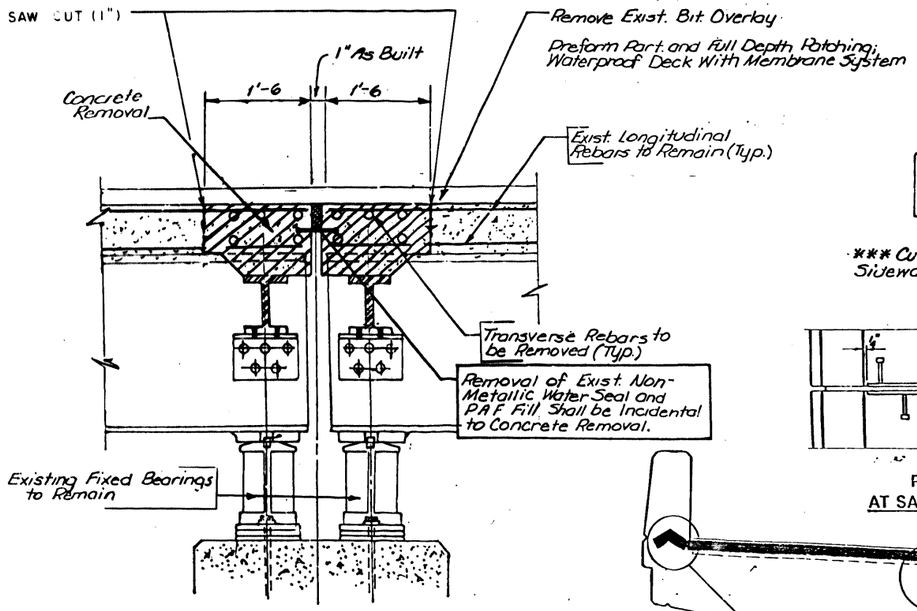

EXISTING PIER 4

Saw Cutting is Considered Incidental to Concrete Removal

*** Cut Retainer Bars in Sidewalk 6" Short of Sidewalk Face

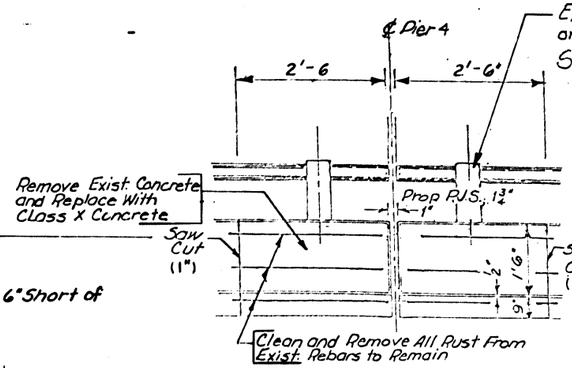

ELEVATION AT PARAPET

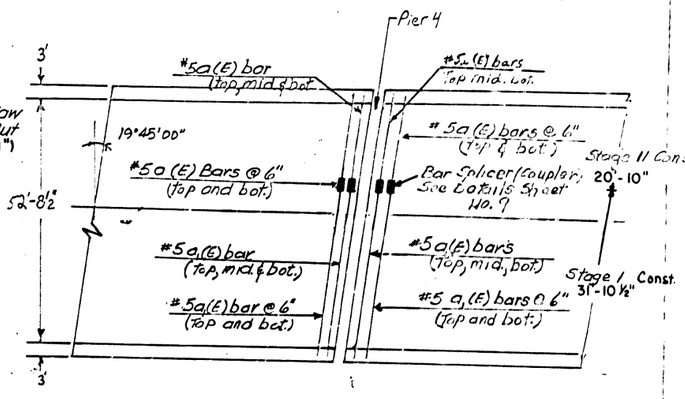

PLAN VIEW - SLAB REINFORCEMENT

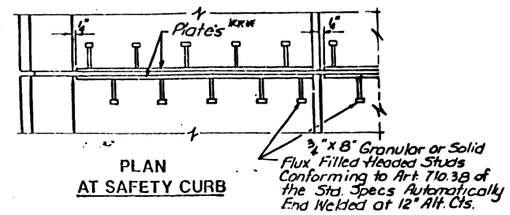

PLAN AT SAFETY CURB

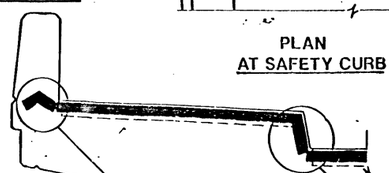

SECTION AT-SAFETY CURB

See Typical Deck Dimensions on Sheet No. 5.

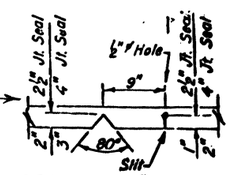

SEAL CUT-OUT at CURB

See End of Seal Cut-Out Detail

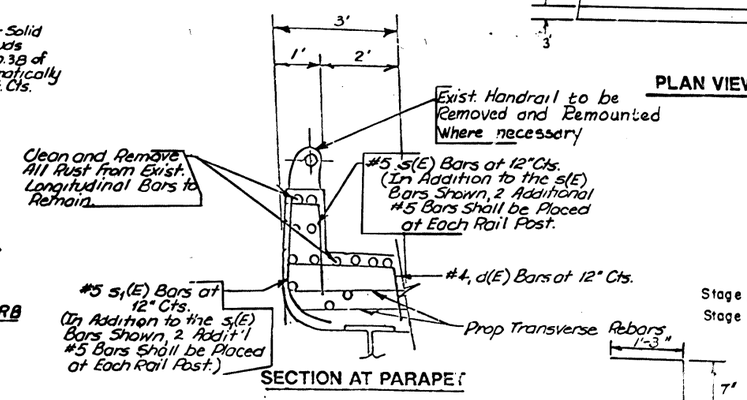

SECTION AT PARAPET

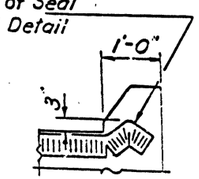

END OF SEAL TREATMENT

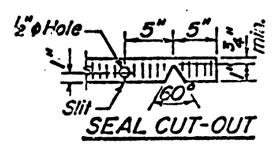

SEAL CUT-OUT

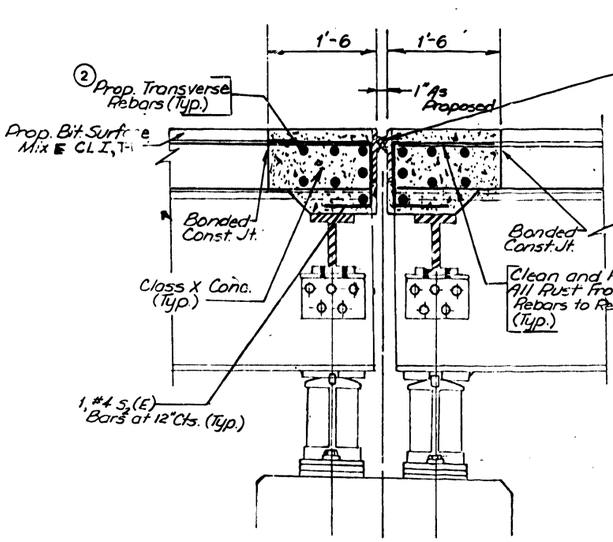

PROPOSED MODIFICATIONS TO PIER 4

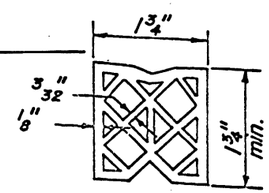

P.J.S., 1 3/4"

*** Furnish in segments of 20 ft. maximum length. Maximum space between installed segments shall be 3/16". Seal space with Silicone Sealant suitable for Structural Steel.

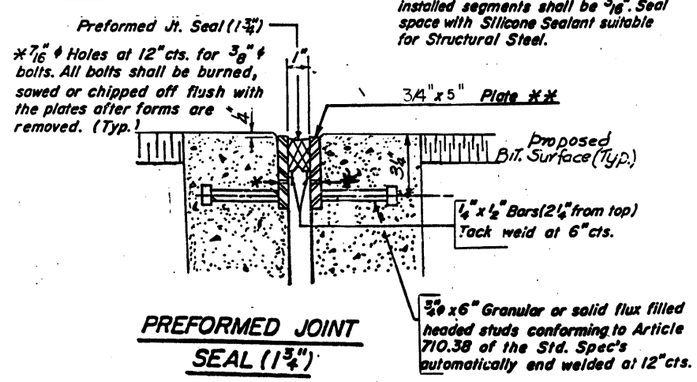

PREFORMED JOINT SEAL (1¾")

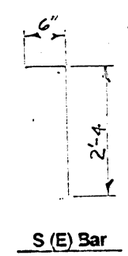

S (E) Bar

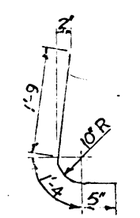

S1(E) Bar

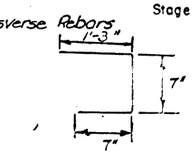

S2(E) Bar

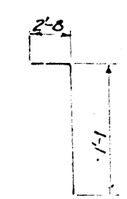

d (E) Bar

BAR SCHEDULE

BAR	NO. REQ'D	SIZE	LENGTH	SHAPE
a1(E) (Stage II)	14	#6	20'-5"	
a1(E) (Stage I)	14	#6	31'-6"	
s(E)	20	#5	2'-10"	
s1(E)	20	#5	3'-6"	
s2(E)	73	#4	2'-3½"	
d(E)	12	#4	3'-9"	

(E) Denotes Epoxy Coated

BILL OF MATERIALS

ITEM	UNIT	QUANTITY
Concrete Removal	Cu.Yds.	5.9
Class X Conc. Super	Cu.Yds.	6.8
Reinforcement Bars, Epoxy Ctd.	Pound	1425
Preformed Joint Seal, 1¾"	Lin.Ft.	53
Furnish and Erect Struct. Steel	Pound	1652
Protective Coat	Sq.Yd.	24.5

NOTES:

1. Clearance Shall be Maintained for Slab Reinforcement. (2" Clear For Top Of Slab & 1" Clear For Bottom Of Slab)
2. Quantities Have Been Provided for a Third Row of Bars (as Shown), However, This Quantity May or May Not be Needed. Its Necessity Shall Be Determined in the Field, by Whether or Not the Third Row of Existing Rebars is Exposed or Hampers Saw Cutting, or At the Discretion of the Field Engineer. The Amount of Concrete Removal Shall be as Shown on the Plans.

REVISIONS	
NAME	DATE

ILLINOIS DEPARTMENT OF TRANSPORTATION
F.A.I 80
BRIDGE REHABILITATION
STRUCTURE NO. 099-0062
DECK DETAILS

SCALE: VERT. HORIZ.
DATE
DRAWN BY
CHECKED BY

Revised: Add ¼" to P.J.S. detail, 3-22-90 ENR

C B A 0 A B C D

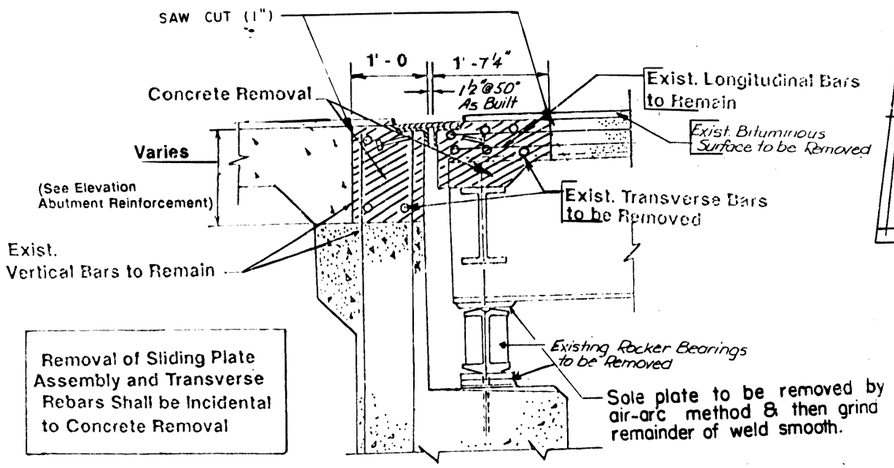

EXISTING SECTION AT ABUTMENT

See Typical Deck Dimensions on Sheet No. 5

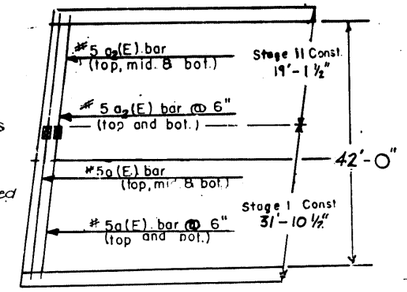

PLAN VIEW - SLAB REINFORCEMENT

WEST ABUTMENT

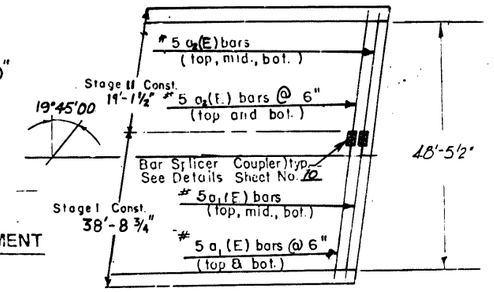

PLAN VIEW - SLAB REINFORCEMENT

EAST ABUTMENT

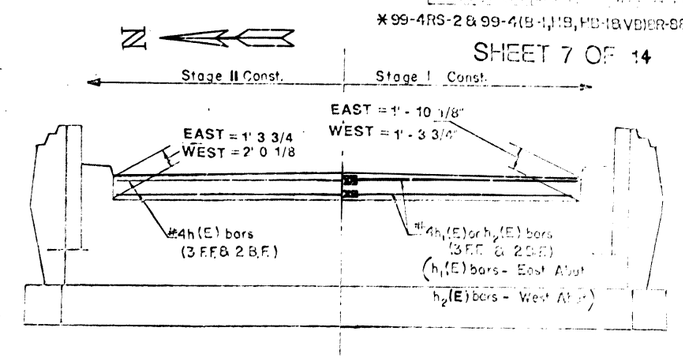

ELEVATION - ABUTMENT REINFORCEMENT

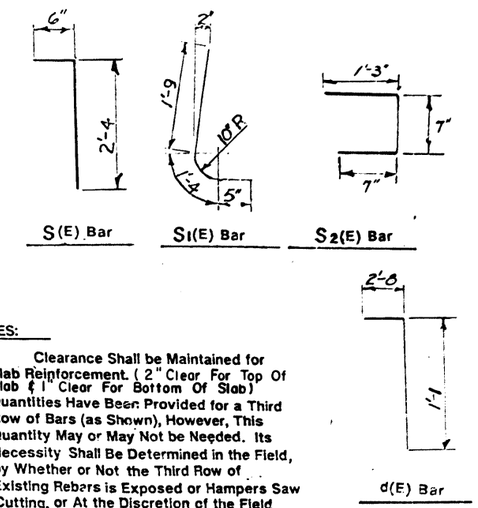

BAR SCHEDULE				
BAR	NO. REQ'D	SIZE	LENGTH	SHAPE
a (E)	7	#6	31'-6"	
a_1(E)	7	#6	38'-4¼"	
a_2(E)	14	#6	18'-8½"	
h(E)	10	#4	15'-6¼"	
h_1(E)	5	#4	35'-2¼"	
h_2(E)	5	#4	28'-3¾"	
s (E)	20	#5	2'-10"	
s_1(E)	20	#5	3'-6"	
s_2(E)	109	#4	2'-5"	
d(E)	12	#4	3'-9"	
u(E)	109	#5	1'-11"	

(E) DENOTES EPOXY COATED

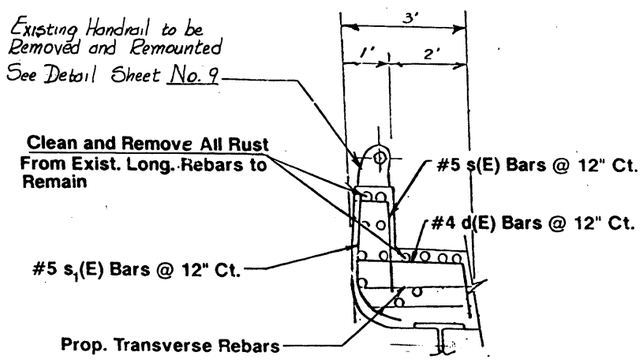

SECTION AT PARAPET

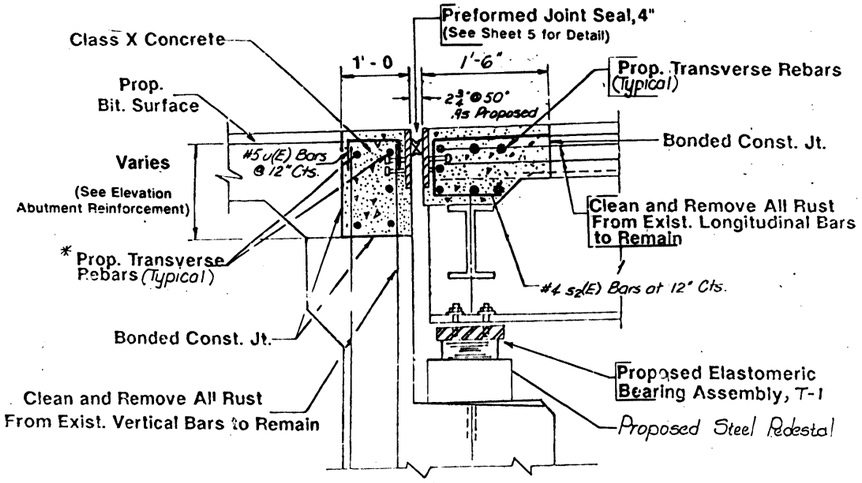

PROPOSED MODIFICATIONS AT ABUTMENT

*Place a(E) and h bars in back of anchor bolt as shown if required to maintain 1" cl. (+0"-1/8"). Anchor bolts should be tied to a(E) and h bars.

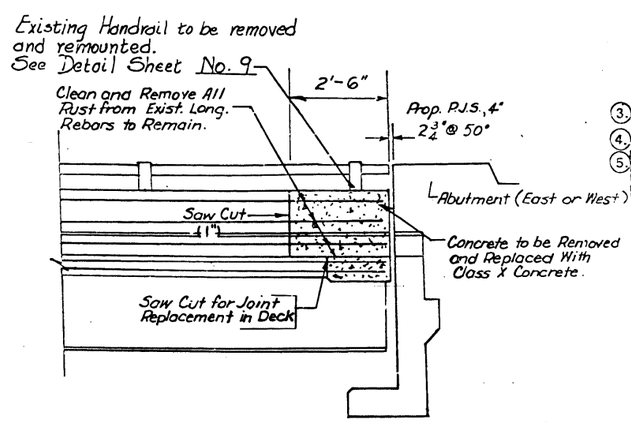

ELEVATION AT ABUTMENTS

(Typical for both Abutments)

NOTES:

1. Clearance Shall be Maintained for Slab Reinforcement. (2" Clear For Top Of Slab & 1" Clear For Bottom Of Slab)
2. Quantities Have Been Provided for a Third Row of Bars (as Shown), However, This Quantity May or May Not be Needed. Its Necessity Shall Be Determined in the Field, by Whether or Not the Third Row of Existing Rebars is Exposed or Hampers Saw Cutting, or At the Discretion of the Field Engineer. The Amount of Concrete Removal Shall be as Shown on the Plans.
3. See Parapet Joint Detail on Sheet 6.
4. See Detail of P.J.S., 4" on Sheet 5.
5. Saw Cutting is Considered as Incidental to Concrete Removal

BILL OF MATERIALS		
ITEM	UNIT	QUANTITY
Concrete Removal	Cu.Yds.	12.2
Class X Conc. Super.	Cu.Yds.	13.7
Reinforcement Bars, Epoxy Ctd.	Pound	2000
Preformed Joint Seal, 4"	Lin.Ft.	109
Furnish and Erect Struct. Steel	Pound	3963
Protective Coat	Sq.Yd	64

REVISIONS	
NAME	DATE

ILLINOIS DEPARTMENT OF TRANSPORTATION
F.A.I. 80
BRIDGE REHABILITATION
STRUCTURE NO. 099-0062

DECK DETAILS

SCALE: VERT. HORIZ.
DATE
DRAWN BY
CHECKED BY

I-80	*	WILL	181 127

*99-4RS-2 & 99-4(B-1,HB,HB-1&VB)SR-88

SHEET 8 OF 14

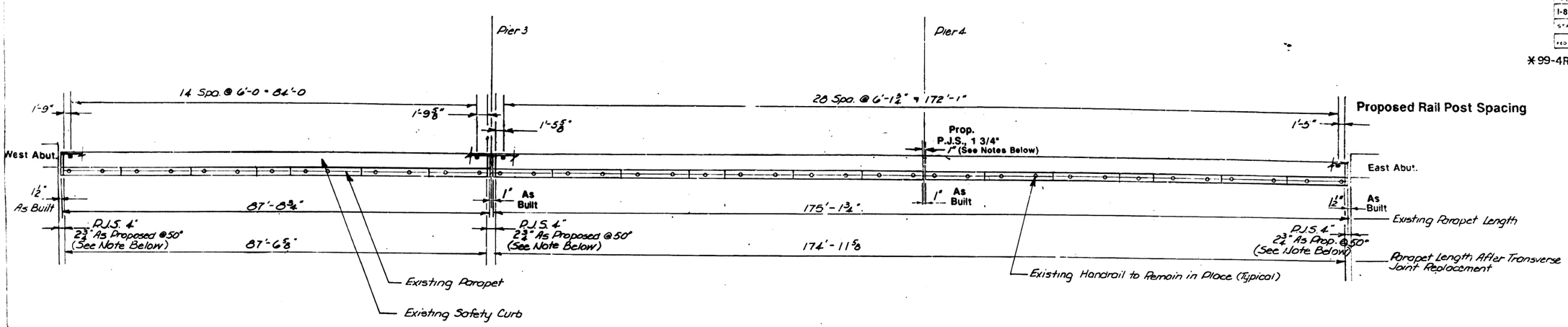

NORTH PARAPET
PROPOSED RAIL POST SPACING

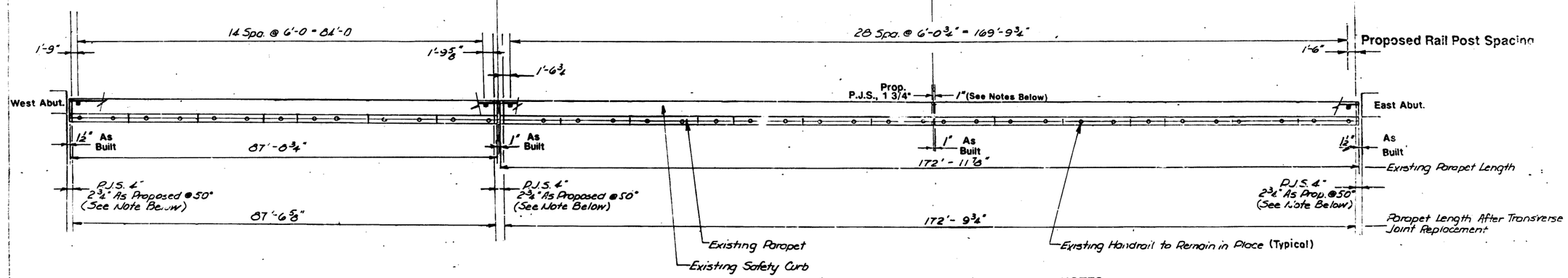

SOUTH PARAPET
PROPOSED RAIL POST SPACING

DETAIL OF PROPOSED RAIL POST SPACING

(Use In Conjunction With Standard 2399-1)

NOTES:

Total Movement of Expansion Joints Due to Variance in Temperature, is as Follows: *

West Abut.
-30 F: 2 3/16"
130 F: 3 5/16"

Pier 3
-30 F: 2 3/16"
130 F: 3 5/16"

Pier 4
Fixed Joint; No Variance

East Abut.
-30 F: 2 3/16"
130 F: 3 5/16"

* *The clearance for each 100' of the bridge between the nearest fixed bearings each way from the joint shall be reduced 1/8" from that amount specified, for each 15° that the temperature at the time of placing exceeds 50° F. and increased 1/8" from that amount specified for each 15° F that the temperature at the time of placing is below 50° F. (See Art 503.07 of the Standard Specifications for Road and Bridge Construction, I.D.O.T., July 1, 1988.)*

BILL OF MATERIALS		
ITEM	UNIT	QUANTITY
Steel Bridge Rail	Lin.Ft.	524

REVISIONS	
NAME	DATE

ILLINOIS DEPARTMENT OF TRANSPORTATION
F.A.I. - 80
BRIDGE REHABILITATION
STRUCTURE NO. 099-0062
DECK DETAILS

SCALE: VERT. HORIZ. DRAWN BY
DATE CHECKED BY

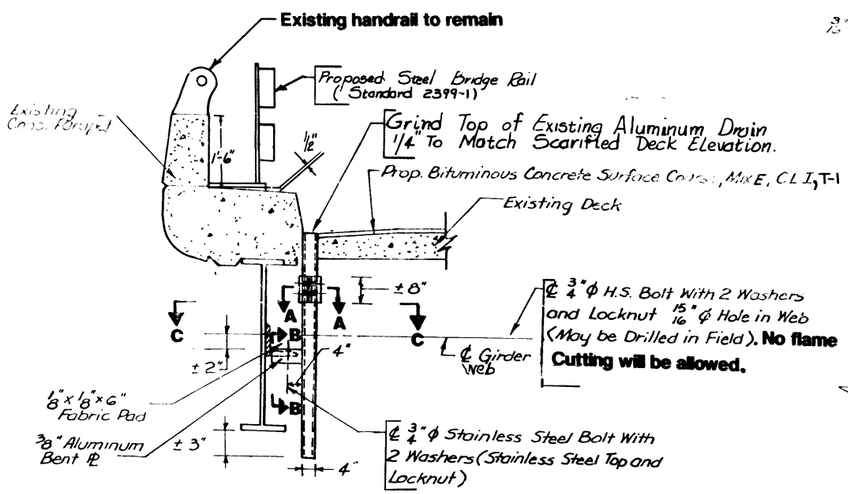

SECTION AT PARAPET

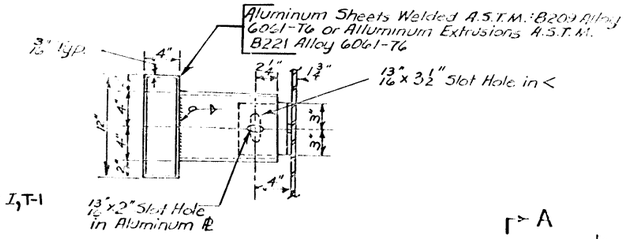

SECTION A-A

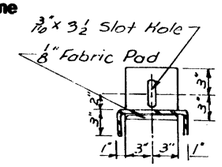

SECTION B-B

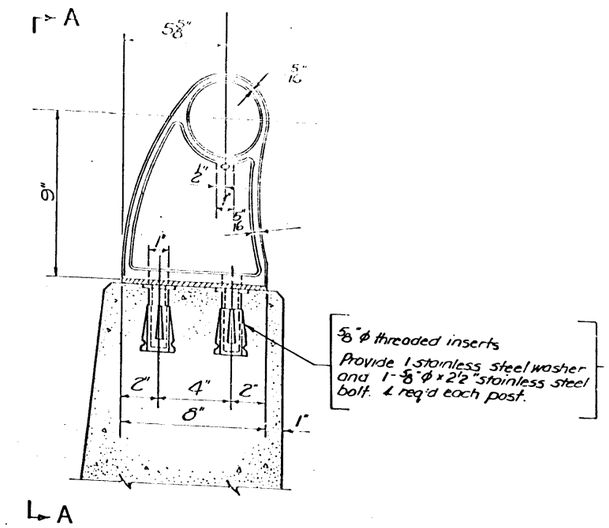

SECTION AT RAIL POST

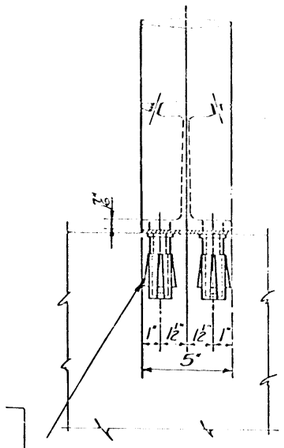

VIEW A-A

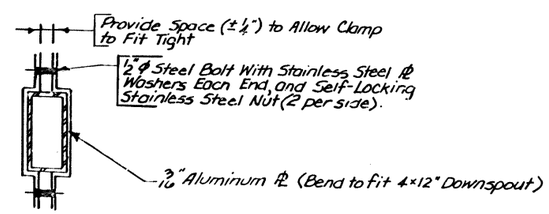

SECTION C-C

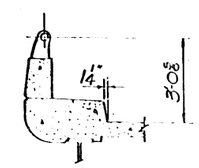

SECTION THRU CURB

NOTES

The Exterior Surfaces of the Aluminum Drains Shall be Cleaned and Given a Washcoat Pretreatment. This Shall be followed by the Lead and Chromate Free Alkyd Paint System. See Special Provisions.

BILL OF MATERIALS		
ITEM	UNIT	QUANT.
Deck Drain to be Extended	Each	42

Note:
If the existing deck drain extends through the deck at an angle the contractor shall fabricate the aluminum drain extension with an angle to extend the drain vertically. see detail A.

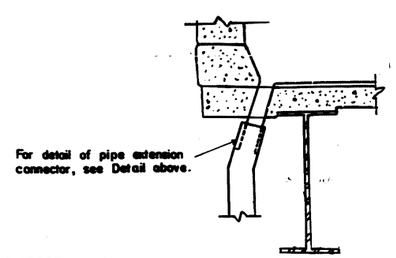

DETAIL A

The Removal and Remounting of the existing handrail shall be incidental to Concrete Removal.

DETAIL OF DECK DRAIN EXTENSION

REMOVAL AND REMOUNTING OF HANDRAIL

REVISIONS	
NAME	DATE

ILLINOIS DEPARTMENT OF TRANSPORTATION
F.A.I-80
BRIDGE REHABILITATION
STRUCTURE NO. 099-0062
DECK DETAILS

SCALE: VERT. HORIZ.
DATE
DRAWN BY
CHECKED BY

STATE OF ILLINOIS
DEPARTMENT OF TRANSPORTATION

ROUTE NO.	SECTION	COUNTY	TOTAL SHEETS	SHEET NO.
F.A.I.-80	*	WILL	181	129
FED. ROAD DIST. NO. 7		ILLINOIS	FED. AID PROJECT-	

*99-4R5-2 & 99-4(B-1, HB, HB-1 & VB) BR-86

SHEET 10 OF 14

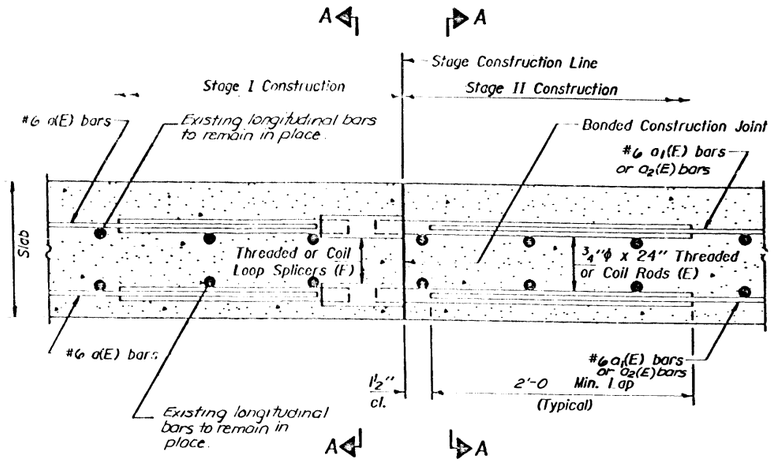

SECTION THRU SLAB

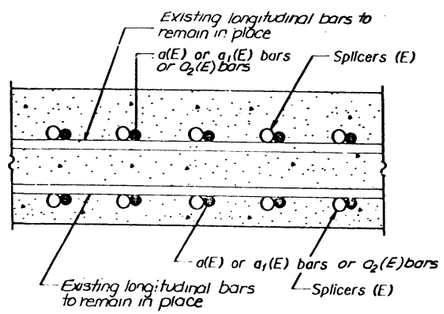

SECTION A-A

SPLICER DETAILS
(No. Req'd. 104)

Cost Incidental to Reinforcement Bars (Epoxy Coated).

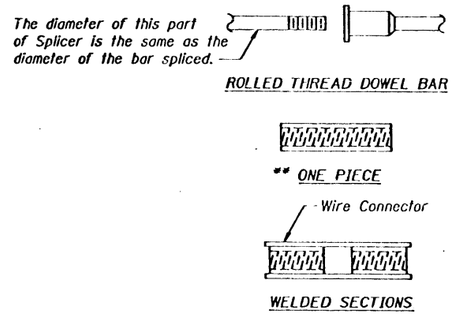

SPLICER ALTERNATIVES

** Heavy Hex Nuts conforming to ASTM A 563, Grade C, D or DH may be used.

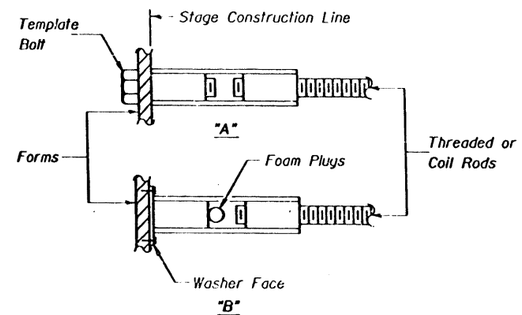

INSTALLATION AND SETTING METHODS

"A" : Set splicer by means of a template bolt.
"B" : Set splicer by nailing to wood forms or cementing to steel forms.
(E) : Indicates epoxy coating.

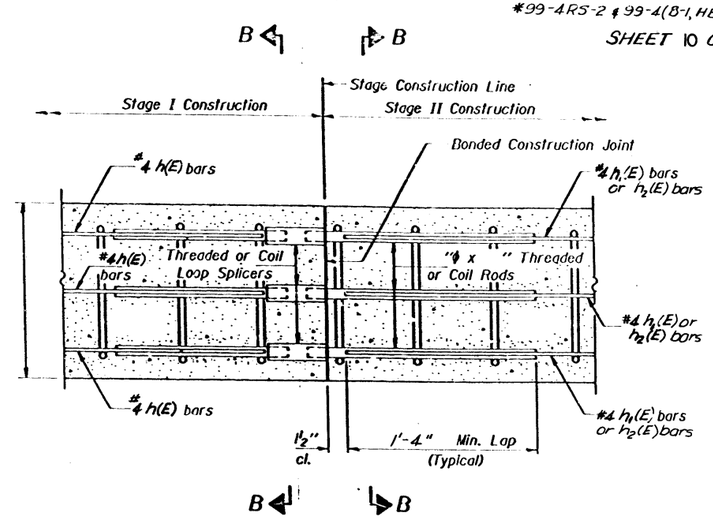

SECTION THRU ABUTMENTS

NOTES

Steel Splicer (Coupler) assembly shall be of an approved type and shall develop in tension at least 125 percent of the yield strength of the lapped reinforcement bars.

Steel Splicer rods shall be of minimum 60 ksi yield strength, threaded or colled full length and have effective tensile stress area equal to or greater than that of the lapped reinforcement bars.

All reinforcement bars shall be lapped and tied to the splicer rods.

Splicer (coupler) assembly in the slab shall be epoxy coated in accordance with the requirements for reinforcement bars.

Other systems of similar design may be submitted to the Engineer for approval. Approval shall be based on certified test results from an approved testing laboratory that the proposed splicer (coupler) assembly satisfies the following requirements:

① Minimum Capacity (Tension in kips) $= 1.25 \times fy \times A_t$

② Minimum "Pull-out Strength (Tension in kips) $= 1.25 \times fs_{allow} \times A_t$

Where fy = Yield strength of lapped reinforcement bars in ksi.
fs_{allow} = Allowable tensile stress in lapped reinforcement bars in ksi (Service Load)
A_t = Tensile stress area of lapped reinforcement bars.
" = 28 day concrete

Typical Splicer (Coupler) Assembly Sizes:

In Slabs	#5 bar lap with $^3/_4$"ϕ Splicer (Coupler) x 2'-0" Splicer Rods	Minimum Capacity = 23.0 kips-tension Minimum Pull-out Strength = 9.2 kips-tension
	#6 bar lap with 1"ϕ Splicer (Coupler) x 2'-4" Splicer Rods	Minimum Capacity = kips-tension Minimum Pull-out Strength = kips-tension
In Sub-Structure	#7 bar lap with 1"ϕ Splicer (Coupler) x 3'-5" Splicer Rods	Minimum Capacity = 45.1 kips-tension Minimum Pull-out Strength = 18.0 kips-tension
	#8 bar lap with 1¼"ϕ Splicer (Coupler) x 4'-6" Splicer Rods	Minimum Capacity = 58.9 kips-tension Minimum Pull-out Strength = 23.6 kips-tension

DESIGNED		19
CHECKED	EXAMINED	
DRAWN	PASSED	ENGINEER OF BRIDGE DESIGN
CHECKED	APPROVED	ENGINEER OF BRIDGES AND STRUCTURES
		DIRECTOR OF HIGHWAYS

BSD-1 6-1-89

ILLINOIS DEPARTMENT OF TRANSPORTATION
F.A.I.-80
BRIDGE REHABILITATION
STRUCTURE NO. 099-0062
BAR SPLICER (COUPLER) DETAILS
AT STAGE CONSTRUCTION

SCALE: VERT. HORIZ. DRAWN BY
DATE CHECKED BY

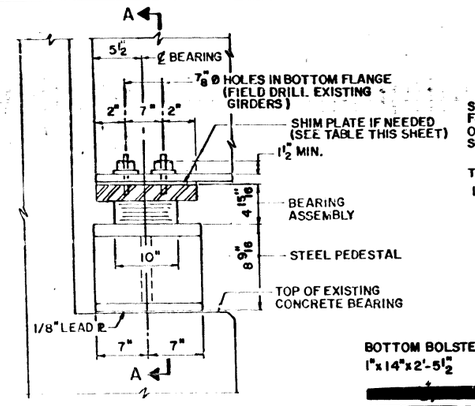

ELEVATION AT ABUTMENT

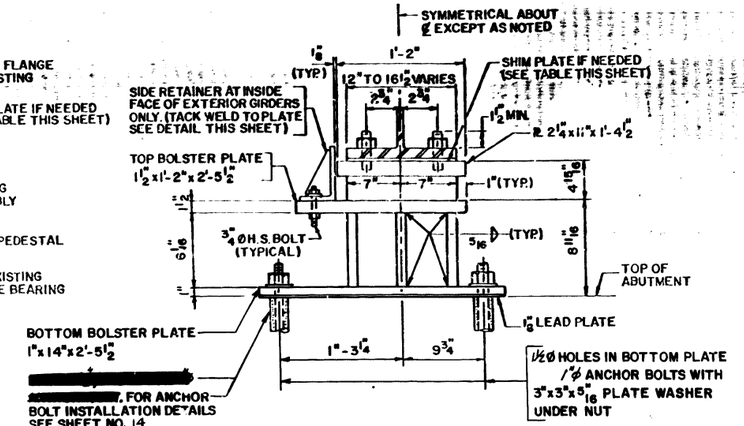

SECTION A-A
(SHOWING EXTERIOR GIRDER)

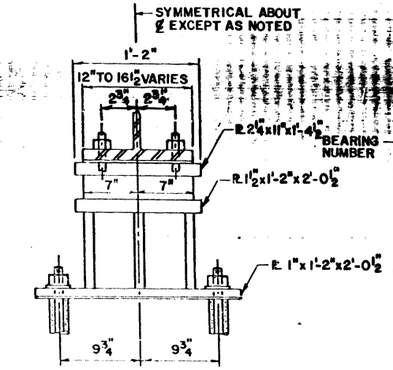

SECTION A-A
(SHOWING INTERIOR GIRDER)

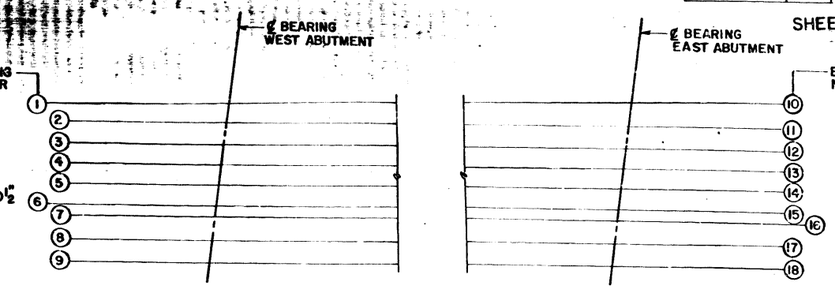

EAST BOUND
SOUTH BRIDGE

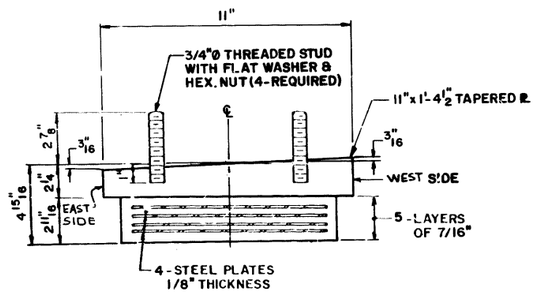

BEARING ASSEMBLY
F.A.I-80 OVER HICKORY CREEK
EAST AND WEST ABUTMENTS

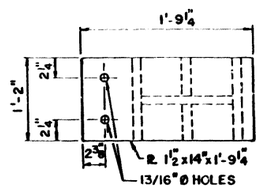

PLAN
TOP PLATE

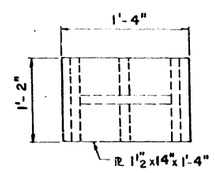

PLAN
TOP PLATE

SOUTH BRIDGE (EAST BOUND)

BEARING NUMBER	1	2	3	4	5	6	7	8	9
THICKNESS OF SHIM PLATE	0	0	0	0	1/8"	3/4"	3/4"	9/16"	0
BEARING NUMBER	10	11	12	13	14	15	16	17	18
THICKNESS OF SHIM PLATE	0	0	0	0	0	7/16"	1/4"	0	0

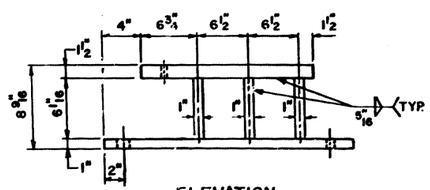

ELEVATION
(SHOWING EXTERIOR PEDESTAL)

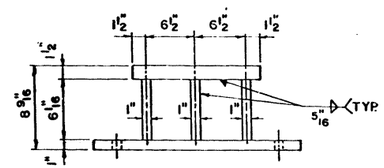

ELEVATION
(SHOWING INTERIOR PEDESTAL)

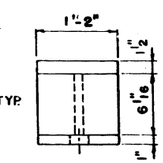

END VIEW
(TYPICAL)

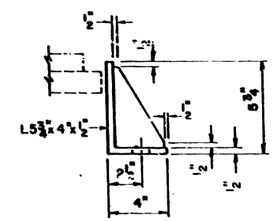

ELEVATION

BILL OF MATERIAL

ITEM	UNIT	TOTAL
ELASTOMERIC BEARING ASSEMBLY TYPE I	EACH	18
JACK AND REMOVE EXISTING BEARINGS	EACH	18
FURNISHING AND ERRECTING STRUCTURAL STEEL	LBS	4770

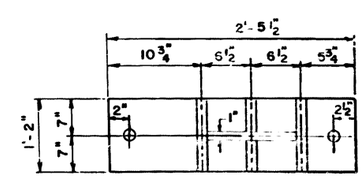

PLAN
BOTTOM PLATE

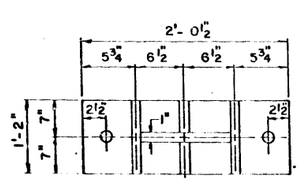

PLAN
BOTTOM PLATE

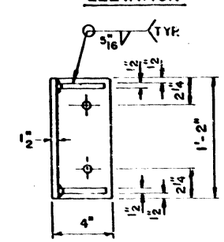

PLAN

SIDE RETAINER

TYPE I
ELASTOMERIC EXPANSION BEARING

NOTES:

BOLSTER ASSEMBLY HEIGHT OF 8 9/16" DOES NOT INCLUDE SHIM PLATE THICKNESS.

FOR SHIM PLATE THICKNESSES SEE TABLE THIS SHEET.

SHIM PLATES SHALL NOT BE PLACED UNDER BEARING ASSEMBLY.

EQUIVALENT ROLLED ANGLE WITH STIFFENERS WILL BE ALLOWED IN LIEU OF WELDED PLATES, **FOR SIDE RETAINERS.**

NEW STEEL PEDESTALS AND ANCHOR BOLTS SHALL BE PAID FOR AS FURNISHING AND ERECTING STRUCTURAL STEEL.

SIDE RETAINERS AND BOLTS SHALL BE INCLUDED IN F & E STRUCTURAL STEEL.

EXISTING ANCHOR BOLTS SHALL BE CUT OFF FLUSH WITH THE CONCRETE SURFACE, 3ROUND SMOOTH AND SEALED WITH EPOXY. COST INCIDENTAL TO COST OF NEW BEARING ASSEMBLIES.

REVISIONS	
NAME	DATE

ILLINOIS DEPARTMENT OF TRANSPORTATION

F.A.I. 80
BRIDGE REHABILITATION
STRUCTURE NO. 099-0062
ELASTOMERIC BEARING

SCALE: VERT. HORIZ.
DRAWN BY M.V.T
DATE
CHECKED BY

Revise: Changed anchor bolt holes size to 1½" & bolt to 1". 3-22-90 ENR

F.A. RTE.	SECTION	COUNTY	TOTAL SHEETS	SHEET NO.
80	*	WILL	181	131
STA		TO STA		
FED. ROAD DIST. NO. 7	ILLINOIS	FED. AID PROJECT		

*99-4RS-2 & 99-4(B-1,HB,HB-18 & VB)BR-88

SHEET 12 OF 14

WEST ABUTMENT

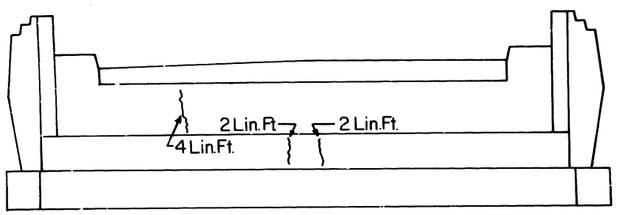

PIER NO. 3 WEST VIEW

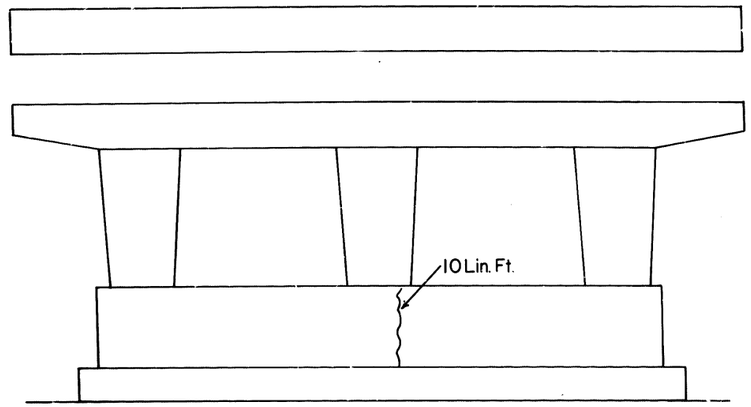

PIER NO. 4 WEST VIEW

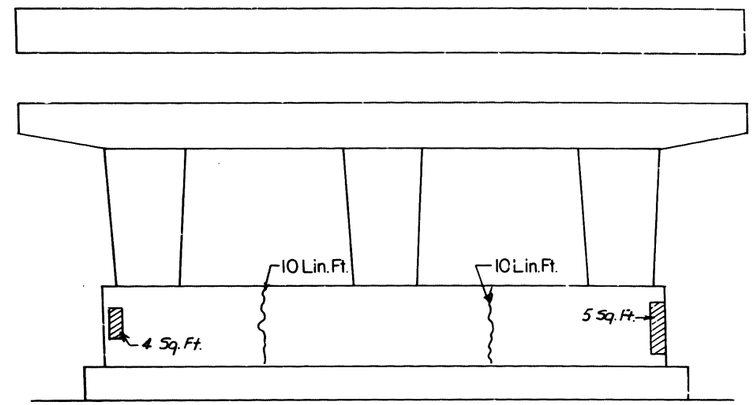

EAST ABUTMENT

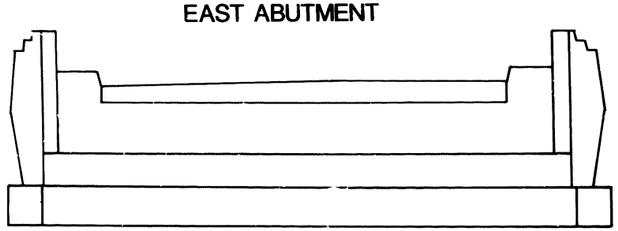

PIER NO. 3 EAST VIEW

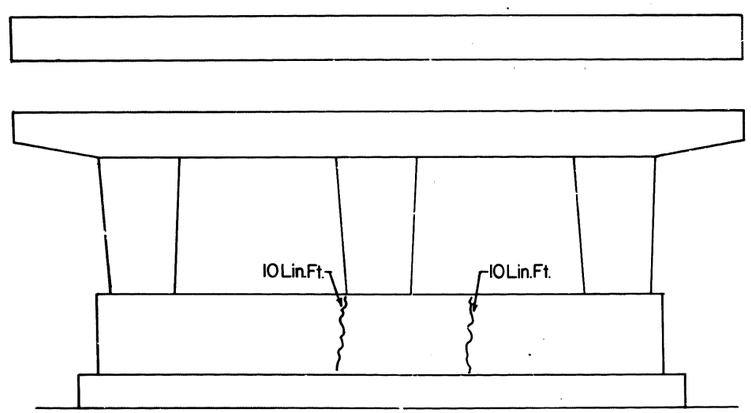

PIER NO. 4 EAST VIEW

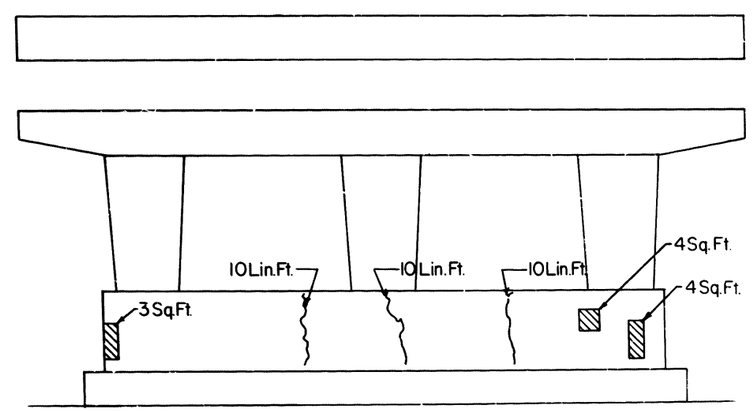

LEGEND

Formed Concrete Repair (1.5" ≤ Depth ≤ 5")

Epoxy Crack Sealing

SUBSTRUCTURE REPAIR

BILL OF MATERIALS

ITEM	UNIT	QUANTITY
Epoxy Crack Sealing	Lin.Ft.	88
Formed Concrete Repair (Depth ≤ 5")	Sq.Ft.	20

REVISIONS	
NAME	DATE

ILLINOIS DEPARTMENT OF TRANSPORTATION
F.A.I. 80
BRIDGE REHABILITATION
STRUCTURE NO. 099-0062
SUBSTRUCTURE REPAIRS

SCALE: VERT. HORIZ.

DATE

DRAWN BY CP

CHECKED BY

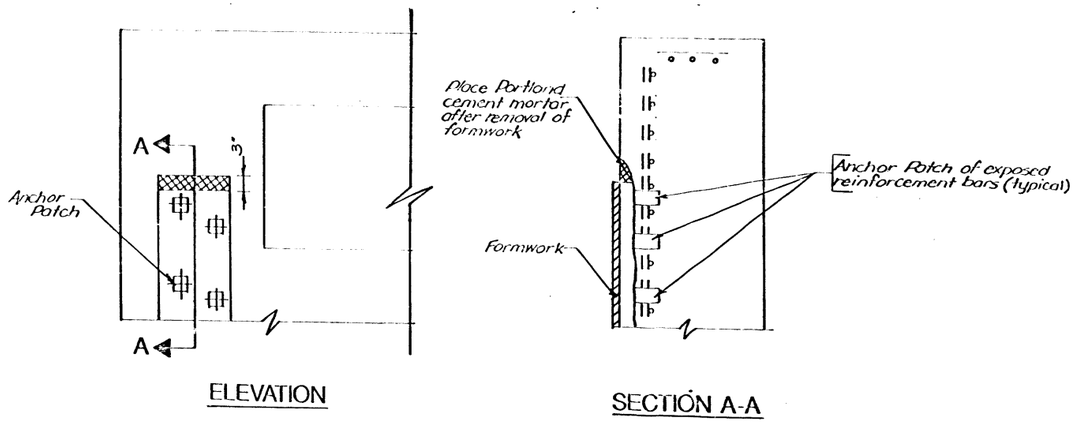

EPOXY MORTAR REPAIR
(DEPTH 1-1/2")

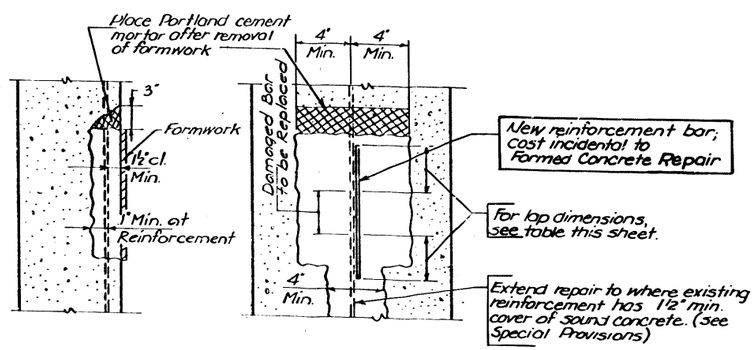

FORMED CONCRETE REPAIR DETAIL WITH REINFORCEMENT

Notes:
Existing reinforcement having 20% or more of cross-sectional area lost due to corrosion or damaged during concrete removal shall be replaced by new reinforcement lapped as shown or noted.

All formed concrete repair dimensions are approximate.

LAP DIMENSIONS

Bar Size	Lap Length
#4	1'-4"
#5	1'-8"
#6	2'-0"
#7	2'-9"

REVISIONS	
NAME	DATE

ILLINOIS DEPARTMENT OF TRANSPORTATION
F.A.I. - 80
BRIDGE REHABILITATION
STRUCTURE NO. 099 - 0062

DETAIL OF
FORMED CONCRETE REPAIR

SCALE: VERT. HORIZ.
DRAWN BY
DATE
CHECKED BY

STATE OF ILLINOIS
DEPARTMENT OF TRANSPORTATION

ROUTE NO.	SECTION	COUNTY	TOTAL SHEETS	SHEET NO.
I-80	*	WILL	181	133

SHEET NO.
SHEETS

99-4RS-2 & 99(38, 4B-1, 4HB, 4HB-1, 4VB) BR-88

SHEET 14 OF 14

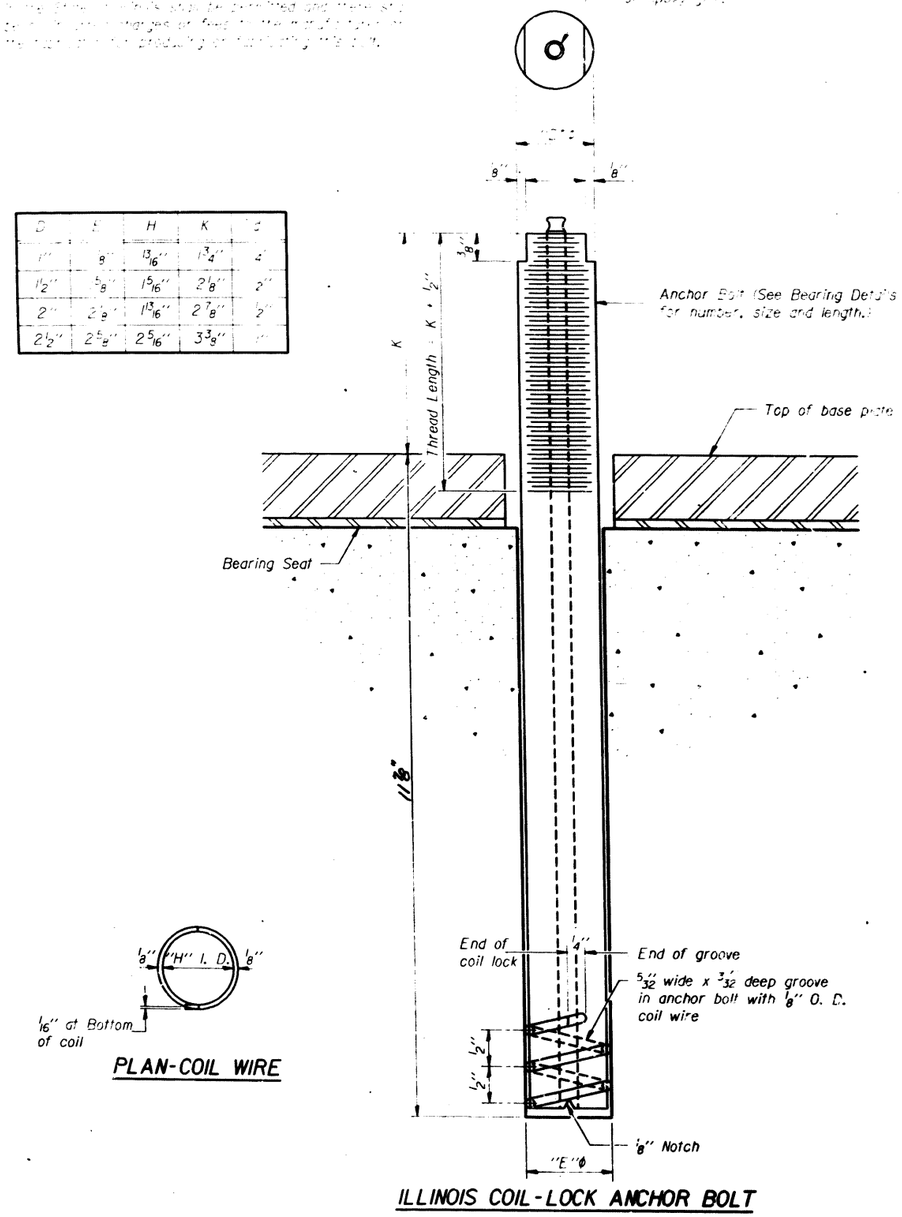

S	E	H	K	J
1"	1/8"	13/16"	1 3/4"	1"
1 1/2"	5/8"	1 5/16"	2 1/8"	2"
2"	2 1/8"	1 13/16"	2 7/8"	2"
2 1/2"	2 5/8"	2 5/16"	3 3/8"	2"

PLAN-COIL WIRE

ILLINOIS COIL-LOCK ANCHOR BOLT

MATERIALS FOR ILLINOIS COIL-LOCK ANCHOR BOLT

The anchor bolt shall be fabricated from cold drawn or hot finished seamless carbon steel mechanical tubing conforming to ASTM A519, Grade 1026 and supplied with hexagonal nuts and cut washers.

The coil wire shall be made of any suitable soft steel wire.

The finished anchor bolt shall be cleaned of rust and other foreign materials and wrapped or packaged to prevent contamination until they are installed.

The epoxy grout shall be a two-component, epoxy resin bonding system conforming to ASTM C881, Type I, Grade I and of a Class suitable for the temperature at installation.

INSTALLATION PROCEDURE for the ILLINOIS COIL-LOCK ANCHOR BOLT

1. With the coil wire in place, the bolt shall be inserted into the hole and turned clockwise to a snug fit in the hole. Nut and washer shall be placed on the bolt. The nut shall be tensioned until the steel base plates are held securely to the concrete bearing seat.
2. Epoxy grout shall be pumped through the zerk fitting with a pressure gun. Pumping shall continue until the epoxy overflows the hole around the bolt shank. After pumping is discontinued, excess epoxy shall be immediately wiped off.

ALTERNATE ANCHOR BOLTS

The Contractor may use, at his option, the capsule or the adhesive cartridge type anchor rods that have been previously tested and given a prior approval by the Department. The Contractor shall install these anchor rods in pre-drilled holes in accordance with the manufacturer's recommendations and procedures.

The capsule or the adhesive cartridge type anchor rods shall be a two part system composed of:

1. A threaded rod stud with nut and washer conforming to ASTM A307.
2. A sealed glass capsule or a sealed glass adhesive cartridge containing premeasured amounts of the adhesive chemical.

GENERAL NOTES

Holes in the masonry for anchor bolts shall be drilled through the base plates to the diameter and depth shown or in accordance with the manufacturer's recommendation after beams or girders have been erected and adjusted.

Prior to setting the bolts, the holes shall be dry and of dust and loose particles shall be removed by the use of compressed air or vacuuming.

The anchor bolts, furnished and installed and including the epoxy grout or capsules shall not be paid for separately, but shall be included in the unit bid price for "Furnishing and Erecting Structural Steel".

DESIGNED	
CHECKED	
DRAWN	
CHECKED	

19
EXAMINED
ENGINEER OF BRIDGE DESIGN
PASSED
ENGINEER OF BRIDGES AND STRUCTURES
APPROVED
DIRECTOR OF HIGHWAYS

ABB-1 12-1-83
Revised: 3-22-90

ANCHOR BOLT DETAILS FOR BEARINGS

Str. No. 099-0062

F.A. RTE.	SECTION	COUNTY	TOTAL SHEETS	SHEET NO.
F-80	*	WILL	181	134
STA.		TO STA.		
FED. ROAD DIST. NO. 7	ILLINOIS	FED. AID PROJEC		

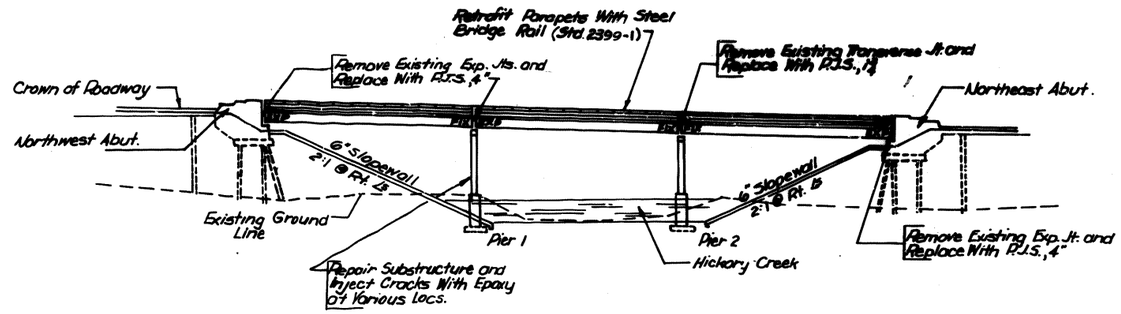

ELEVATION

Existing Bridge Description:
The bridge is a 3-span, continuous steel wide-flange structure. The 7-inch-thick deck is supported on reinforced concrete piers and abutments. Typically, steel piles support the abutments and creosoted timber piles support the approach slabs of each end. (See Note Below).

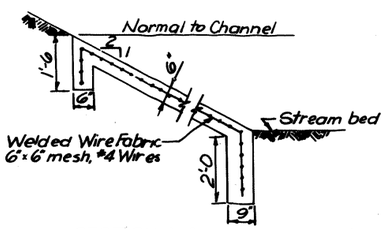

SECTION A-A

Repairs Over Entire Deck

1. Remove Exist. Asphaltic Conc. Overlay
2. Deleted
3. Apply Waterproofing Membrane System
4. Overlay With Bituminous Concrete Surface Course, Mix B, CL I, 2" T-1

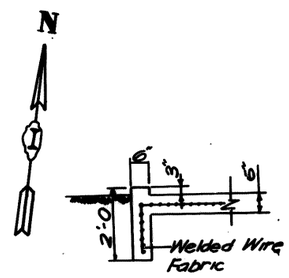

SECTION B-B

Note:
Abutments and Piers are Parallel to ℄ Hickory Creek. ℄ F.A.I. 80 and P.G.L. Eastbound and Westbound Rdwys. on Tangent and Parallel to Each Other.

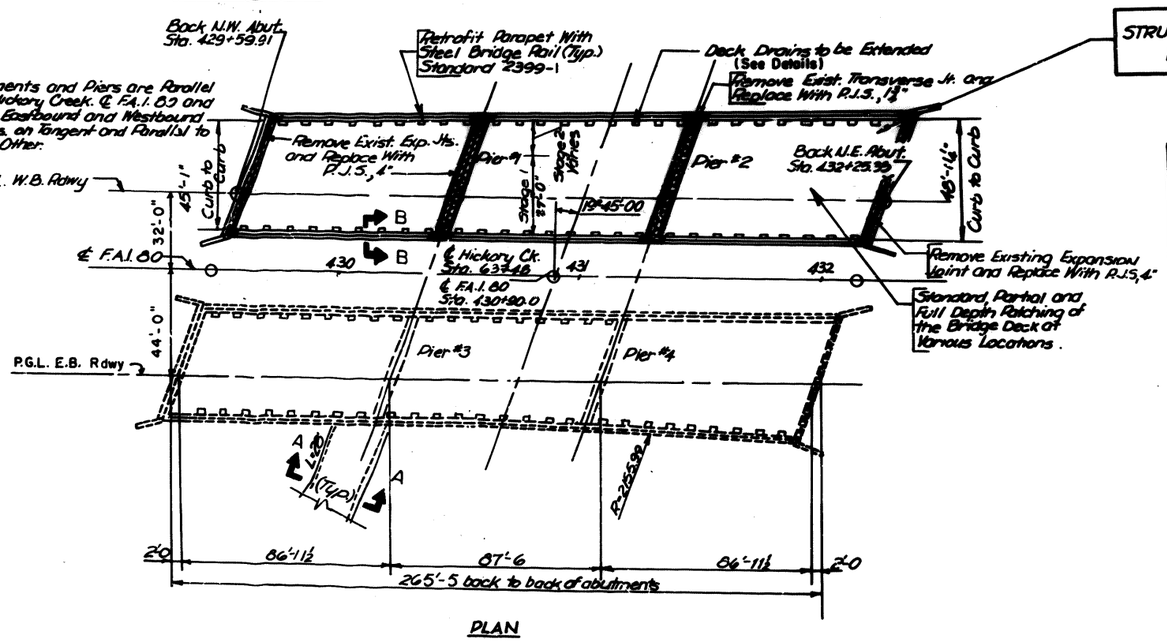

PLAN

STRUCTURE NO. 099-0063
WESTBOUND

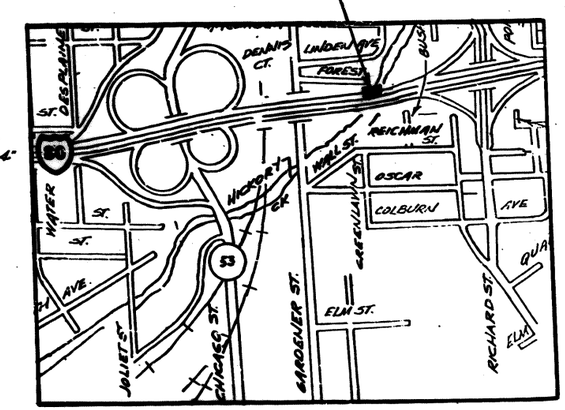

LOCATION MAP

PLAN NOTES

Plan dimensions and details relative to the the existing structure have been taken from existing plans and are subject to normal construction variations. It shall be the contractor's responsibility to verify such dimensions and details in the field and make necessary, approved adjustments prior to construction or ordering of materials. Such variations shall not be cause for additional compensation for a change in scope of work, however, the contractor will be paid for the quantity actually furnished at the unit price bid for the work.

The contractor must use extreme care when doing concrete removal as not to nick, cut, or damage any of the structural steel.

Reinforcement bars shall conform to the requirements of A.A.S.H.T.O. M-42, M-31 or M-53 Grade 60.

For pavement markings on bridge, see roadway plans.

All contact surface areas of new and existing structural steel shall be free of paint or lacquer.

All structural steel beneath expansion joints shall be sandblasted and repainted; 5' on either side at abutments and 10' on either side at piers. See Special Provision for "Cleaning and Painting Steel Bridges."
The 3-coat lead and chromatic free Alkyd paint system shall be used for field painting of existing structural steel and new structural steel. The color of the final finish coat shall be Interstate Green (Munsell 7.5G 4/8) on fascia beams (visible from expressway) and Light Gray (Munsell 10 YR 7/1) on all interior beams.

* 99-4RS-2 & 99-4(B-1, HB, HB-1 & VB) BR-88
SHEET 1 OF 14

The exact location of slopewall Removal and Replacement shall be determined by the field engineer.

Field welding of construction accessories will not be permitted to the bottom flange of beams or girders, nor to the top flange for a distance equal to ¼ the span length each way from the pier supports. Field welding in other areas will be permitted only when approved by the Engineer.

INDEX OF SHEETS

Sheet No.	Title
1	Plan and Elevation
2	Typical Section
3	Stage Construction
4-10	Deck Details
11	Elastomeric Bearings
12-13	Substructure Repairs
14	Anchor Bolt Details For Bearings

REVISIONS	
NAME	DATE

ILLINOIS DEPARTMENT OF TRANSPORTATION
F.A.I. - 80
BRIDGE REHABILITATION
STRUCTURE NO. 099-0063
PLAN & ELEVATION

SCALE: VERT. No Scale HORIZ.
DRAWN BY BH
DATE
CHECKED BY

F.A. RTE.	SECTION	COUNTY	TOTAL SHEETS	SHEET NO.
I-80	*	WILL	181	135

STA. TO STA.

FED. ROAD DIST. NO. 7 | ILLINOIS | FED. AID PROJECT

*99-4RS-2 & 99-4(B-1,HB,HB-18 VB)ER-88

SHEET 2 OF 14

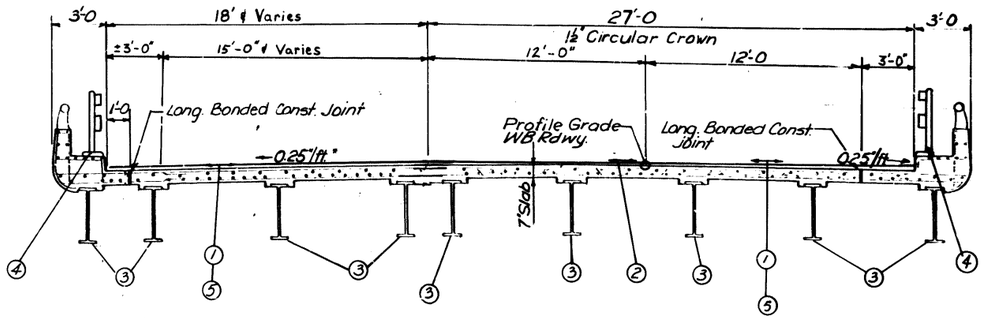

* Cross slope varies after sta. 431+88.96 120' transition to a cross slope of 4.15% at Sta. 433+08.96.

TYPICAL CROSS SECTION

(Facing East)

LEGEND

1. Removal of Existing Asphaltic Concrete; Scarification of the Bridge Deck ¼"
2. Standard, Partial and Full Depth Patching of the Bridge Deck at Various Locations
3. Jack and Remove Exist. Bearings at Abutments; Furnish and Install Proposed Elastomeric Bearing Assembly, Type 1
4. Retrofit Parapets with a Steel Bridge Rail (Std. 2399-1)
5. Waterproof Deck with Membrane System; Overlay Deck with 2" Bituminous Concrete Surface Course, Mix E, Cl. I, T-1.

ITEM	UNIT	QUANTITY		
		substructure	superstructure	Total
Jack and Remove Exist. Bearings	Each		18	18
Elastomeric Bearing Assembly, T-1	Each		18	18
Concrete Removal	Cu. Yds.		25.8	25.8
Class X Concrete Superstructure	Cu. Yds.		29.3	29.3
Preformed Joint Seal, 1¾"	Lin. Ft.		56	56
Preformed Joint Seal, 4"	Lin. Ft.		159	159
Reinforcement Bars Epoxy Coated	Pound		4930	4930
Waterproof Membrane System	Sq. Yds.		1377	1377
Deck Drain To Be Extended	Each		42	42
Deck Slab Repair (Partial)	Sq. Yds.		280.6	280.6
Deck Slab Repair (Full Depth) T-1	Sq. Yds.		19.1	19.1
	Sq. Yds.			
Epoxy Crack Sealing	Lin. Ft.	89		89
Formed Concrete Repair (Depth: 4.5")	Sq. Ft.	22		22
Bituminous Concrete Surface Removal	Sq. Yds.		1377	1377
Bituminous Concrete Surface Course, Mix E, Cl. I, 2", T-1	Tons		180	180
Protective Coat	Sq. Yds.		140	140
Clean and Paint Steel Bridge	L. Sum		.16	.16
Slopewall Removal and Replacem't	Sq. Yd.			25
Steel Bridge Rail	Lin. Ft.		527	527
Furnish and Erect Structural Steel	Pound		12,296	12,296
Drainage Structures to be Cleaned	Each			2

REVISIONS	
NAME	DATE

ILLINOIS DEPARTMENT OF TRANSPORTATION

F.A.I.-80

BRIDGE REHABILITION

STRUCTURE NO. 099-0063

TYPICAL CROSS SECTION

SCALE: VERT. HORIZ. | DRAWN BY C.P.

DATE | CHECKED BY

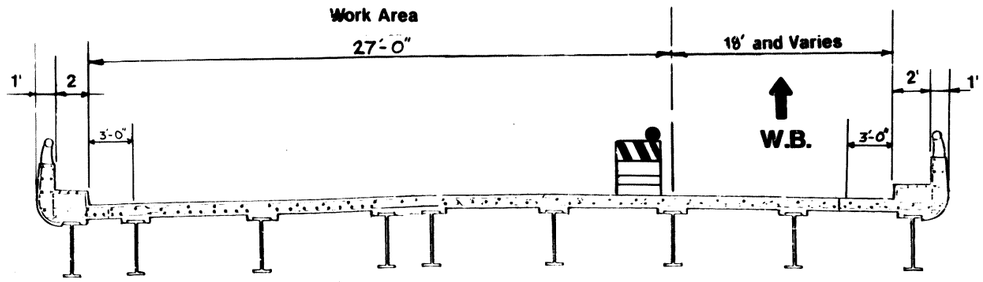

STAGE I
(Facing West)

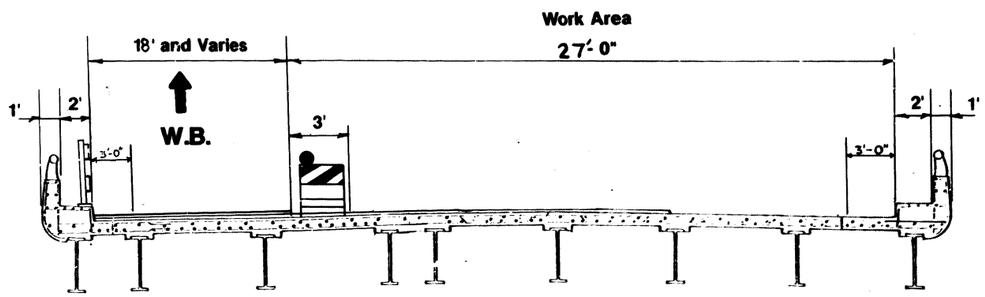

STAGE II
(Facing West)

STAGE I

1. PLACE TRAFFIC CONTROL AND DIVERT TRAFFIC TO NORTH SIDE.
2. REMOVE EXISTING BRIDGE CONCRETE OVERLAY
3. CONSTRUCT PARTIAL AND FULL DEPTH SLAB REPAIRS
4. JACK BRIDGE AND REMOVE EXISTING BEARINGS AND INSTALL PROPOSED ELASTOMERIC BEARING ASSEMBLY.
5. EXTEND DECK DRAINS
6. REPLACE TRANVERSE JOINTS
7. PAINT STRUCTURAL STEEL (5' ON EITHER SIDE OF BEARINGS AT ABUTMENTS AND 10' ON EITHER SIDE OF THE BEARINGS AT THE PIERS.)
8. REPAIR SUBSTRUCTURE
9. RETROFIT THE SAFETY CURBS BY PLACING A BRIDGE STEEL RAIL (STANDARD 2399-1)
10. APPLY WATERPROOFING MEMBRANE AND RESURFACE BRIDGE

STAGE II

1. PLACE TRAFFIC CONTROL AND DIVERT TRAFFIC TO SOUTH SIDE.
2. REMOVE EXISTING BRIDGE CONCRETE OVERLAY
3. CONSTRUCT PARTIAL AND FULL DEPTH SLAB REPAIRS
4. JACK BRIDGE AND REMOVE EXISTING BEARINGS AND INSTALL PROPOSED ELASTOMERIC BEARING ASSEMBLY.
5. EXTEND DECK DRAINS
6. REPLACE TRANVERSE JOINTS
7. PAINT STRUCTURAL STEEL (5' ON EITHER SIDE OF BEARINGS AT ABUTMENTS AND 10' ON EITHER SIDE OF THE BEARINGS AT THE PIERS.
8. REPAIR SUBSTRUCTURE
9. RETROFIT THE SAFETY CURBS BY PLACING A BRIDGE STEEL RAIL (STANDARD 2399-1)
10. APPLY WATERPROOFING MEMBRANE AND RESURFACE BRIDGE

REVISIONS	
NAME	DATE

ILLINOIS DEPARTMENT OF TRANSPORTATION
F.A.I.-80
BRIDGE REHABILITATION
STRUCTURE NO. 099-0063
STAGE CONSTRUCTION

SCALE: VERT. HORIZ.
DATE
DRAWN BY C.P.
CHECKED BY

F.A. RTE.	SECTION	COUNTY	TOTAL SHEETS	SHEET NO.
I-80	*	WILL	181	137
STA.		TO STA.		
FED. ROAD DIST. NO. 7	ILLINOIS	F.A.I. & C. PROJECT		

* 99-4RS-2 & 99-4(B-1, HB, HB-1 & VB)BR-88

SHEET 4 OF 14

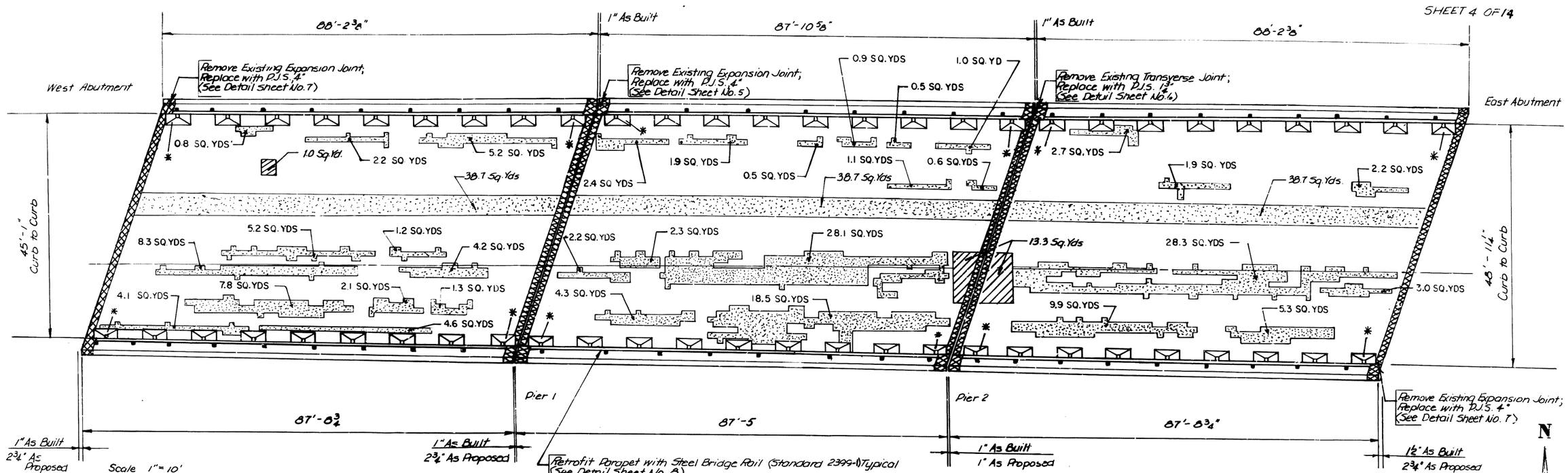

Scale 1" = 10'

Date of Latest Delamtect: 9-23-89

Note:

Exposed reinforcement shall be cleaned and incorporated into the concrete patch or, if necessary replacement reinforcement added and spliced with the existing retained reinforcement, as directed by the Engineer.

Repairs Over Entire Deck:

1) Remove existing bituminous concrete overlay.
2) Deleted
3) Preform standard, partial and full depth patching as shown.
4) Waterproof the deck with a membrane system.
5) Resurface the deck with bituminous concrete surface course, mix E, CL 1, 2", T-1.

Legend

- Deck Slab Repair (Partial Depth)
- Deck Slab Repair (Full Depth) T-1
- Concrete Removal

BILL OF MATERIALS

ITEM	UNIT	QUANTITY
Bit. Conc. Surf. Cse, Mix E*, CL 1, 2	Tons	180
Waterproof Membrane System	Sq. Yds.	1377
Deck Slab Repair (Partial Depth)	Sq. Yds.	280.6
Deck Slab Repair (Full Depth) T-1	Sq. Yds.	19.1
Brit. Conc. Surface Removal	Sq. Yds.	1377

NOTE:

*Mix E = 130 lbs/Sq. Yd./Inch Depth

QUANTITY FOR DECK SLAB REPAIR (PARTIAL) SHOWN IN BILL OF MATERIALS IS 70% THE QUANTITY DETERMINED BY THE DELAMTECT SURVEY. IT IS ANTICIPATED THAT 30% OF THE DELAMINATIONS OCCUR BECAUSE OF DEBONDING BETWEEN THE ASPHALT OVERLAY AND THE CONCRETE DECK.

DECK SLAB REPAIR

Removal of existing deck drain is incidental to the pay item of "Deck Slab Repair, Full Depth".

Removal of existing deck drain & repair of deck to be paid for at the contract unit per Sq. Yd. for Deck Slab Repair (Full Depth) use 0.4 S.Y. per location.

* Deck Drains within 10 ft of the substructure are to be eliminated. All other deck drains are to be extended.

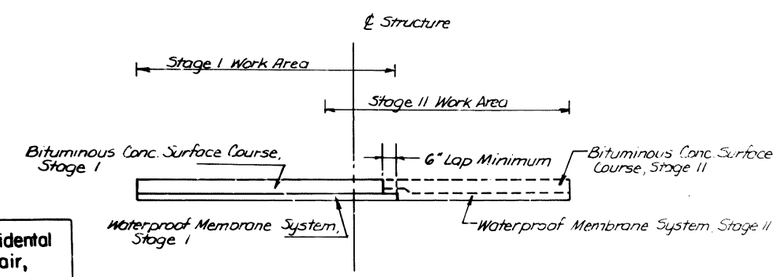

DETAIL OF WATERPROOF MEMBRANE SYSTEM

(6" Lap)

REVISIONS	
NAME	DATE

ILLINOIS DEPARTMENT OF TRANSPORTATION

FAI 80

BRIDGE REHABILITATION

STRUCTURE NO. 099-0063

DECK DETAILS

SCALE VERT HORIZ

DRAWN BY

DATE

CHECKED BY

F.A. RTE.	SECTION	COUNTY	TOTAL SHEETS	SHEET NO.
I-80	*	WILL	181	138
STA		TO STA		
FED. ROAD DIST. NO. 7	ILLINOIS		FED. AID PROJECT	

*99-4RS-2 & 99-4(B-1, HB, HB-13 VB) ER 89

SHEET 5 OF 14

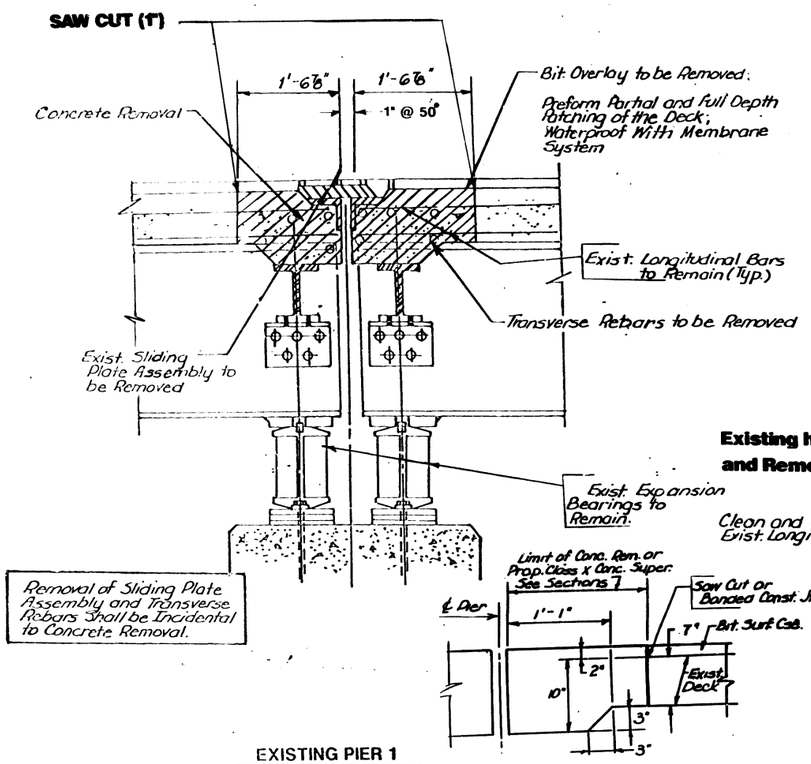

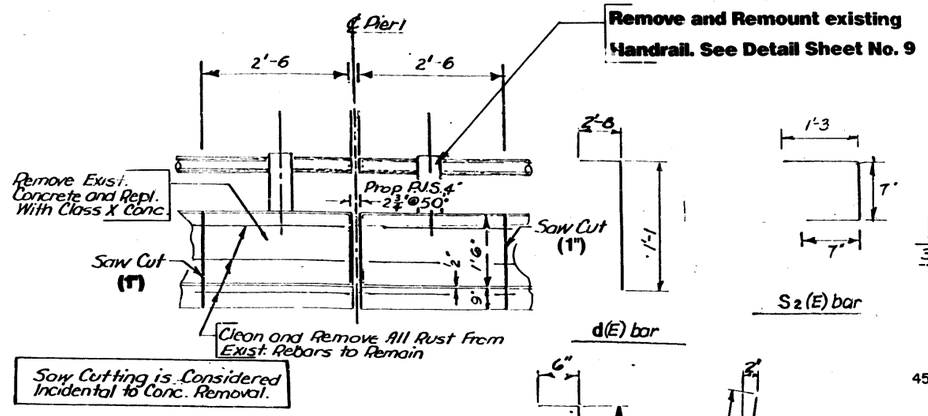

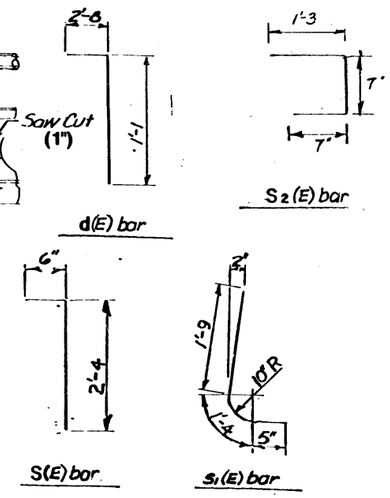

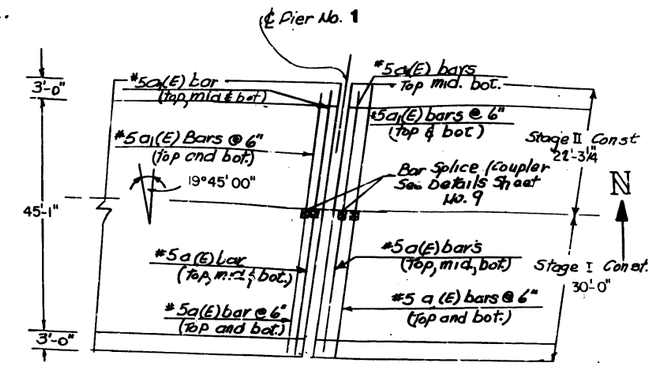

PLAN VIEW - SLAB REINFORCEMENT

EXISTING PIER 1

TYPICAL DECK DIMENSIONS

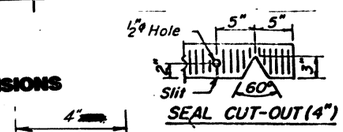

SEAL CUT-OUT (4")

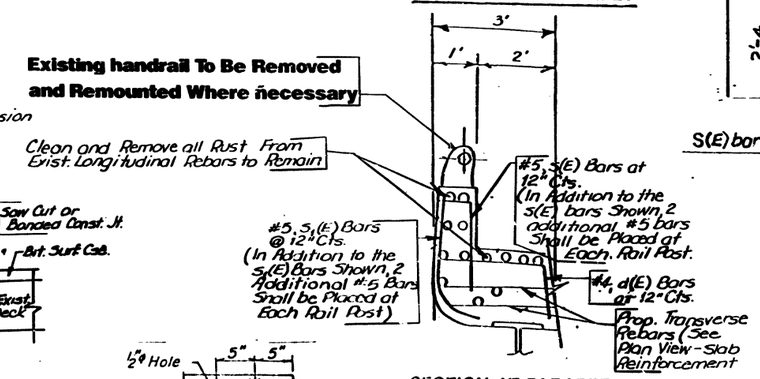

SECTION AT PARAPET

NOTES:

1. Clearance Shall be Maintained for Slab Reinforcement. (2" Clear For Top Of Slab & 1" Clear For Bottom Of Slab)
2. Quantities Have Been Provided for a Third Row of Bars (as Shown), However, This Quantity May or May Not be Needed. Its Necessity Shall Be Determined in the Field, by Whether or Not the Third Row of Existing Rebars is Exposed or Hampers Saw Cutting, or At the Discretion of the Field Engineer. The Amount of Concrete Removal Shall be as Shown on the Plans.
3. See Parapet Joint Detail on Sheet 6.

BAR SCHEDULE

BAR	NO. REQ'D	SIZE	LENGTH	SHAPE	
a (E)	14	#6	31'-6"		Stage I
a1(E)	14	#6	21'-11 3/4"		Stage II
S(E)	20	#5	2'-10		
S1(E)	20	#5	3'-6		
S2(E)	108	#4	2'-5		
d(E)	12	#4	3'-9		

(E) Denotes Epoxy Coated

BILL OF MATERIALS

ITEM	UNIT	QUANTITY
Concrete Removal	Cu.Yds.	6.1
Class X Conc. Super.	Cu.Yds.	70
Reinforcement Bars, Epoxy Ctd.	Pound	1461
Preformed Joint Seal, 4"	Lin.Ft.	54
Furnish. and Erect. Struct. Steel	Pound	1963
Protective Coat	Sq.Yds.	24.8

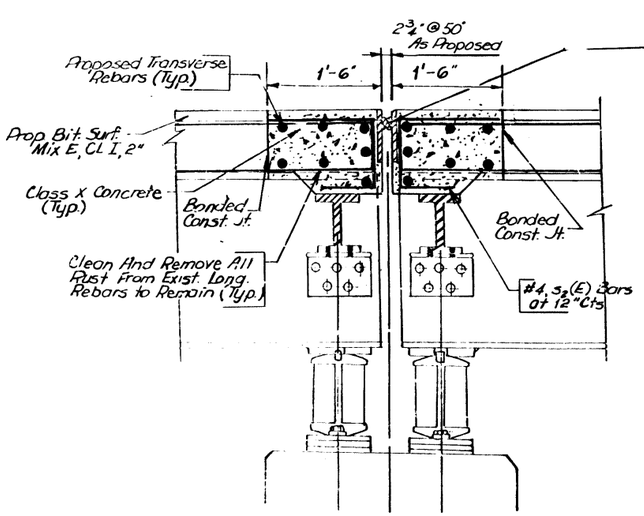

PROPOSED MODIFICATIONS AT PIER 1

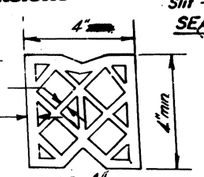

P.J.S. 4"

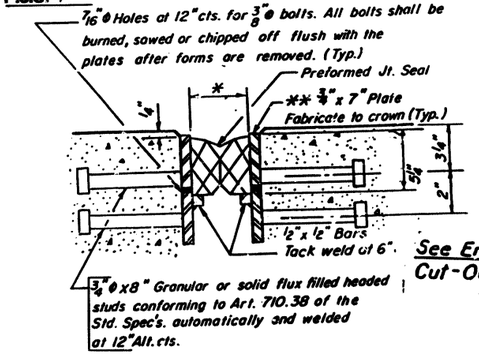

PREFORMED JOINT SEAL, 4"

See End of Seal Cut-Out Detail

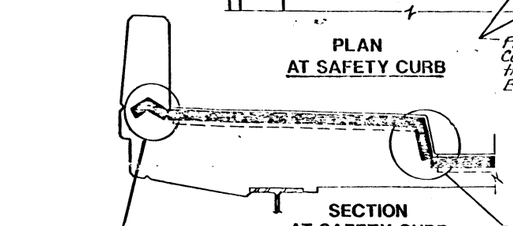

END OF SEAL TREATMENT

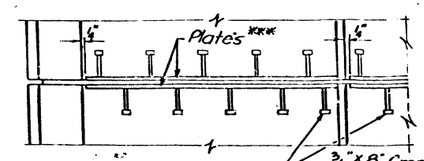

PLAN AT SAFETY CURB

3/4" x 8" Granular or Solid Flux Filled Headed Studs Conforming to Art. 710.38 of the Std. Specs Automatically End Welded at 12" Alt. Cts.

SECTION AT SAFETY CURB

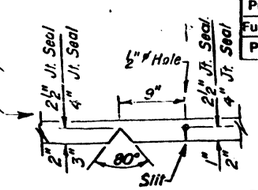

SEAL CUT-OUT at CURB

Notes

* At 50° the Opening is 2 3/4". Their Total Movement for Temp. Var. of -30° F to 130°F is Shown on Sheet 8.

** Furnish in Segments of 20' Max. Length. Max Space Between Installed Segments Shall be 3/16". Seal Space With Silicone Sealant Suitable for Structural Steel.

After Fabrication All Surfaces of the Steel Plates Shall be Given One Shop Coat of Paint Specified for Structural Steel.

*** Cut Retainer Bars in Sidewalk 6" Short of Sidewalk Face

DETAIL OF EXPANSION JOINT REPLACEMENT AT PIER NO. 1

REVISIONS	
NAME	DATE

ILLINOIS DEPARTMENT OF TRANSPORTATION

F.A.I 80

BRIDGE REHABILITATION

STRUCTURE NO. 099-0053

DECK DETAILS

SCALE VERT HORIZ

DATE

DRAWN BY

CHECKED BY

F.A. RTE.	SECTION	COUNTY	TOTAL SHEETS	SHEET NO.
I-80	*	WILL	181	139

STA: — TO STA: —

FED. ROAD DIST. NO. 7 | ILLINOIS | FED. AID PROJECT

*99-4RS-2 & 99-4(B-1,HB,HB-18 & VB)PR-88

SHEET 6 OF 14

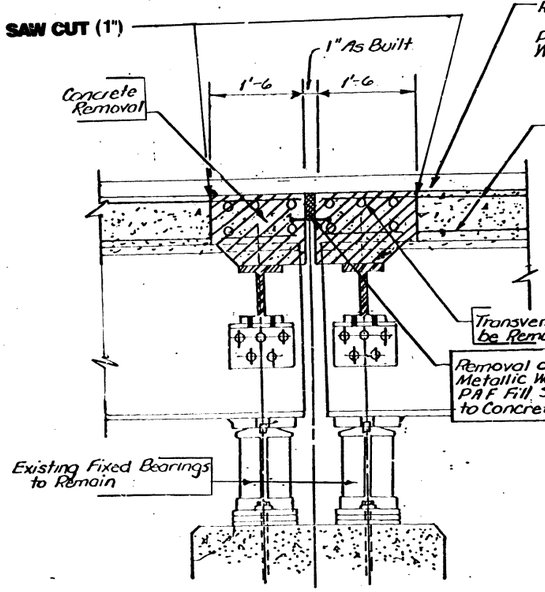

EXISTING PIER 2

NOTE:
See Typical Deck Dimensions Sheet No. 5

Saw Cutting is Considered Incidental to Concrete Removal

*** Cut Retainer Bars in Sidewalk 6" Short of Sidewalk Face

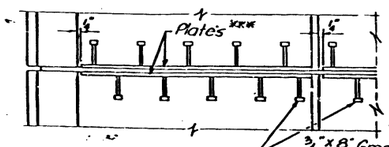

PLAN AT SAFETY CURB

3/4" x 8" Granular or Solid Flux Filled Headed Studs Conforming to Art. 710.38 of the Std. Specs Automatically End Welded at 12" Alt. Cts.

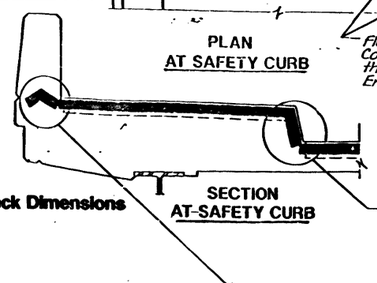

SEAL CUT-OUT at CURB

See End of Seal Cut-Out Detail

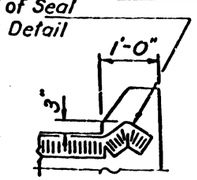

END OF SEAL TREATMENT

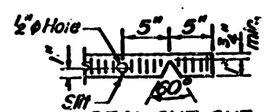

SEAL CUT-OUT

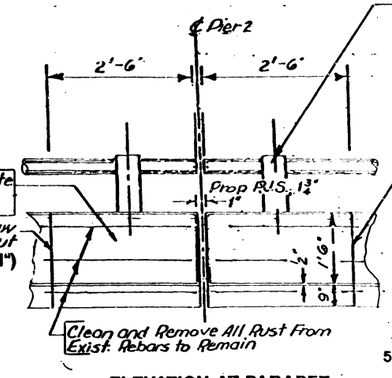

ELEVATION AT PARAPET

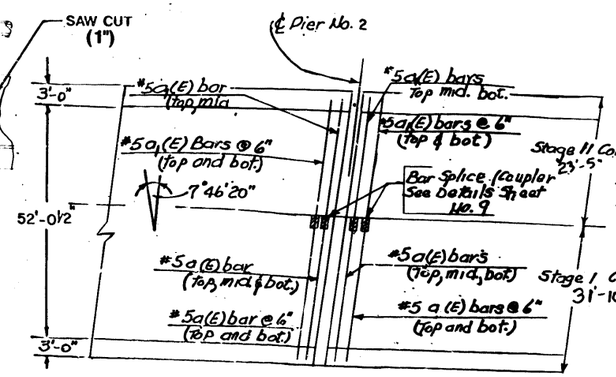

PLAN VIEW - SLAB REINFORCEMENT

EXISTING HANDRAIL TO BE Removed and Remounted. See Detail Sheet No. 9

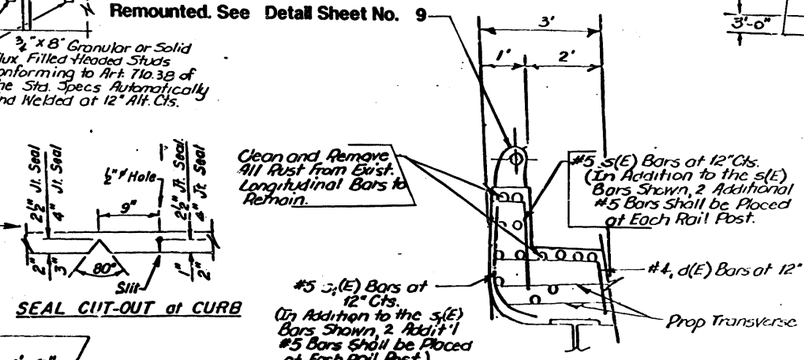

SECTION AT PARAPET

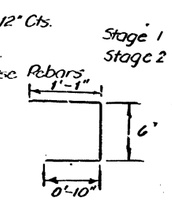

BAR SCHEDULE

BAR	NO. REQ'D	SIZE	LENGTH	SHAPE
a (E)	14	#6	31'-6"	
a1(E)	14	#6	23'-0"	
s(E)	20	#5	2'-10	
s1(E)	20	#5	3'-6	
s2(E)	112	#4	2'-5	
d(E)	12	#4	3'-9	

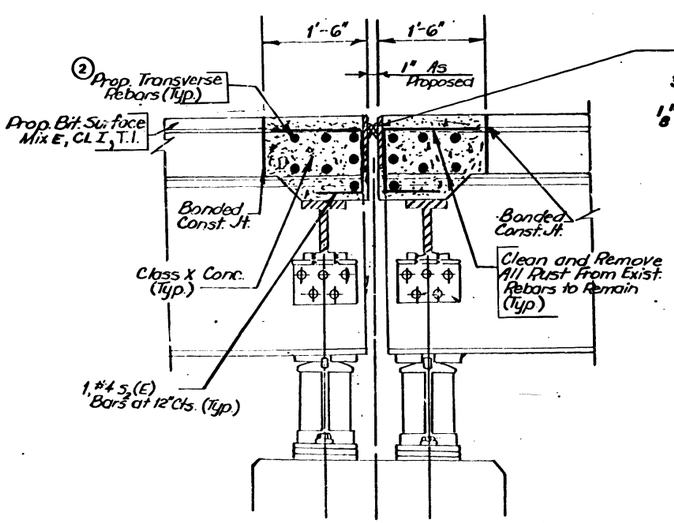

PROPOSED MODIFICATIONS TO PIER 2

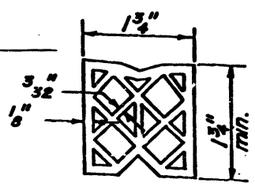

P.J.S., 1 3/4"

** Furnish in segments of 20 ft. maximum length. Maximum space between installed segments shall be 3/16". Seal space with Silicone Sealant suitable for Structural Steel.

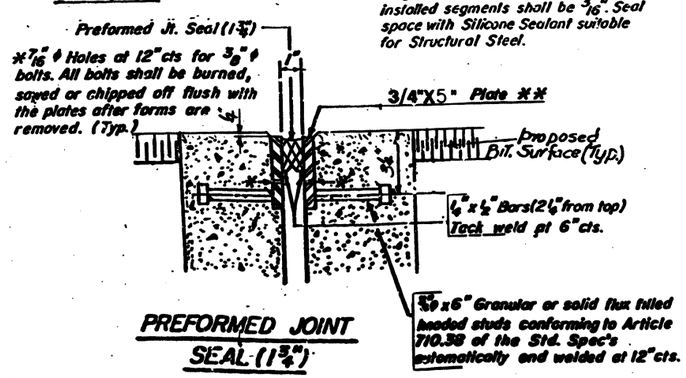

PREFORMED JOINT SEAL (1¾")

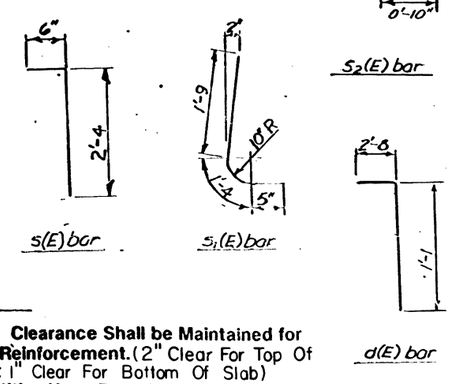

(E) Denotes Epoxy Coated

NOTES:

1. **Clearance Shall be Maintained for Slab Reinforcement.** (2" Clear For Top Of Slab & 1" Clear For Bottom Of Slab)
2. **Quantities Have Been Provided for a Third Row of Bars (as Shown), However, This Quantity May or May Not be Needed. Its Necessity Shall Be Determined in the Field, by Whether or Not the Third Row of Existing Rebars is Exposed or Hampers Saw Cutting, or At the Discretion of the Field Engineer. The Amount of Concrete Removal Shall be as Shown on the Plans.**

BILL OF MATERIALS

ITEM	UNIT	QUANTITY
Concrete Removal	Cu.Yds.	61
Class X Conc. Super.	Cu.Yds.	72
Reinforcement Bars, Epoxy Ctd.	Pound	1500
Preformed Joint Seal, 1¾"	Lin.Ft.	56
Furnish. and Erect. Struct. Steel	Pound	1745
Protective Coat	Sq. Yds.	25.5

REVISIONS	
NAME	DATE

ILLINOIS DEPARTMENT OF TRANSPORTATION
F.A.I 80
BRIDGE REHABILITATION
STRUCTURE NO. 099-0063
DECK DETAILS

SCALE: VERT. HORIZ.
DATE
DRAWN BY
CHECKED BY

Revised: Added 4" to P.J.S. detail. 3-22-90 ENR

F.A.I. RTE.	SECTION	COUNTY	TOTAL SHEETS	SHEET NO.
I-80	*	WILL	181	140
STA.		TO STA.		
FED. ROAD DIST. NO. 7	ILLINOIS			

*99-4RS-2 & 99-4(B-1,HB,HB-1&VB)ER-88

SHEET 7 OF 14

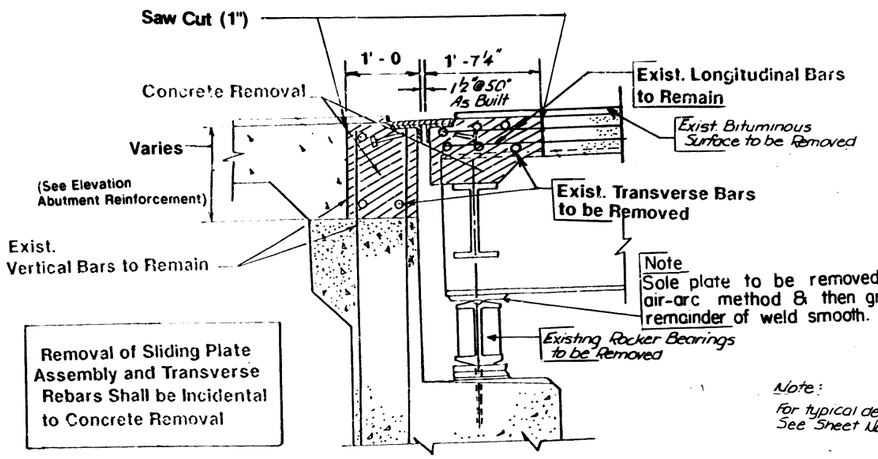

EXISTING SECTION AT ABUTMENT

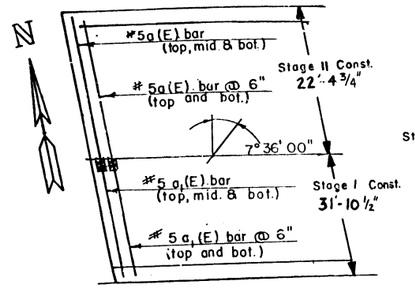

PLAN VIEW - SLAB REINFORCEMENT

WEST ABUTMENT

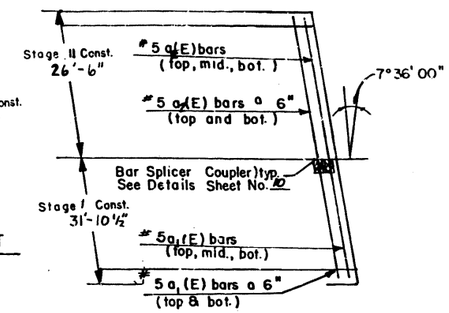

PLAN VIEW - SLAB REINFORCEMENT

EAST ABUTMENT

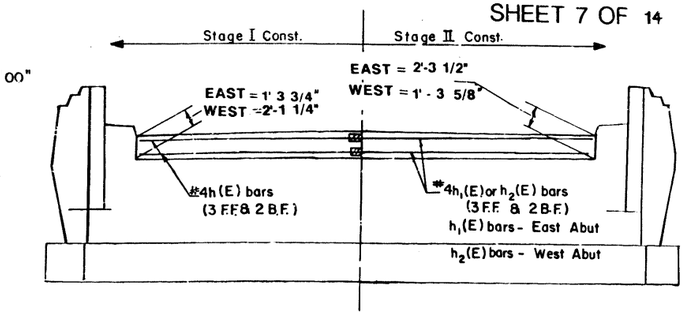

ELEVATION - ABUTMENT REINFORCEMENT

Note:
For typical deck dimensions See Sheet No. 5

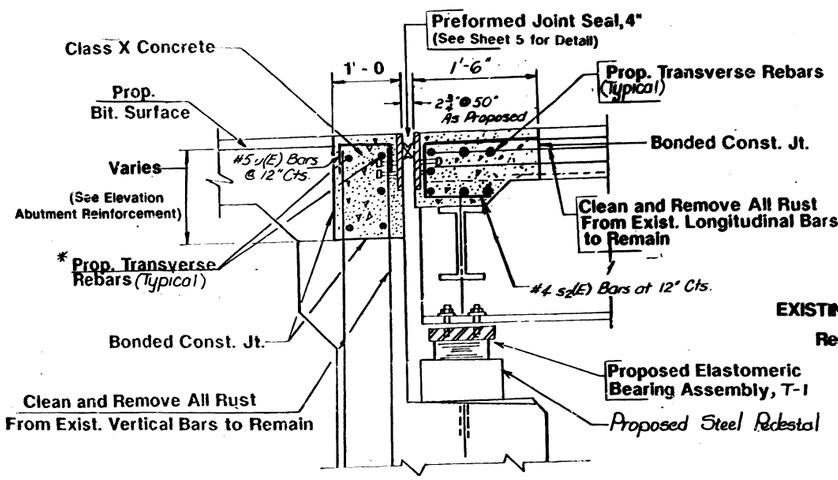

PROPOSED MODIFICATIONS AT ABUTMENT

*Place a(E) and h bars in back of anchor bolt as shown if required to maintain 1" cl. (+0"-1/8"). Anchor bolts should be tied to a(E) and h bars.

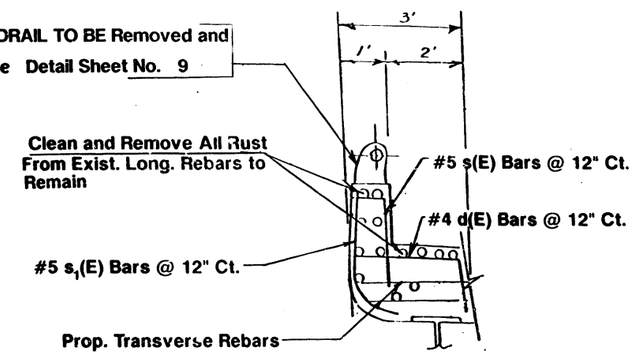

SECTION AT PARAPET

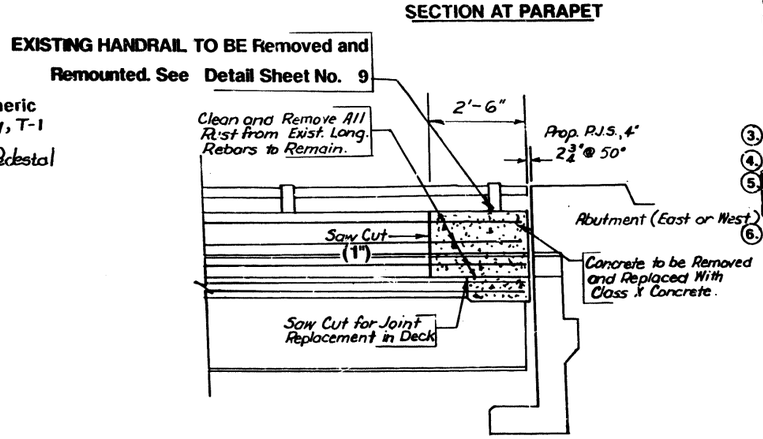

ELEVATION AT ABUTMENTS

(Typical for both Abutments)

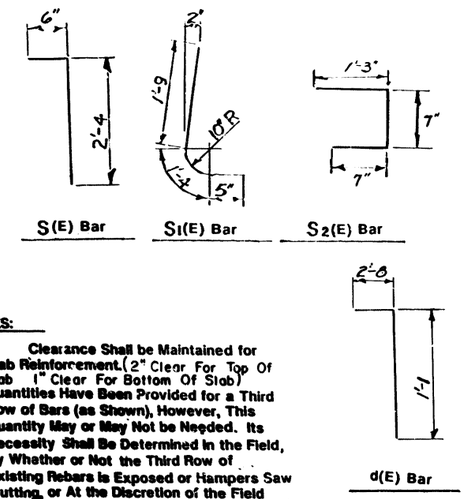

NOTES:

1. Clearance Shall be Maintained for Slab Reinforcement. (2" Clear For Top Of Slab 1" Clear For Bottom Of Slab)
2. Quantities Have Been Provided for a Third Row of Bars (as Shown), However, This Quantity May or May Not be Needed. Its Necessity Shall Be Determined in the Field, by Whether or Not the Third Row of Existing Rebars is Exposed or Hampers Saw Cutting, or At the Discretion of the Field Engineer. The Amount of Concrete Removal Shall be as Shown on the Plans.
3. See Parapet Joint Detail on Sheet 6.
4. See Detail of P.J.S., 4" on Sheet 5.
5. Saw Cutting is Considered as Incidental to Concrete Removal
6. (E) Denotes Epoxy Coated

BAR SCHEDULE

BAR	NO. REQ'D	SIZE	LENGTH	SHAPE
a(E)	7	#6	21'-11¾"	
a₁(E)	14	#6	31'-6"	Stage I
a₂(E)	7	#6	26'-1"	
U(F.)	105	#5	1'-11"	
h(E)	10	#4	28'-3¾"	
h₁(E)	5	#4	22'-10¾"	
h₂(E)	5	#4	28'-3¾"	
s(E)	20	#5	2'-10"	
s₁(E)	20	#5	3'-6"	
s₂(E)	109	#4	2'-5"	
d(E)	12	#4	3'-9"	

(E) DENOTES EPOXY COATED

BILL OF MATERIALS

ITEM	UNIT	QUANTITY
Concrete Removal	Cu.Yds.	13.6
Class X Conc. Super.	Cu.Yds.	15.1
Reinforcement Bars, Epoxy Ctd.	Pound	1969
Preformed Joint Seal, 4"	Lin.Ft.	105
Furnish and Erect Struct. Steel	Pound	3818
Protective Coat	Sq.Yd.	63

REVISIONS	
NAME	DATE

ILLINOIS DEPARTMENT OF TRANSPORTATION

F.A.I. 80

BRIDGE REHABILITATION

STRUCTURE NO. 099-0063

DECK DETAILS

SCALE: VERT. HORIZ.

DATE

DRAWN BY

CHECKED BY

F.A. RTE.	SECTION	COUNTY	TOTAL SHEETS	SHEET NO.
I-80	*	WILL	181	141
STA.		TO STA.		
FED. ROAD DIST. NO. 7	ILLINOIS	FED. A.D. PROJECT		

*99-4RS-2 & 99-4(B-1,HB,HB-1&VB)BR-88

SHEET 8 OF 14

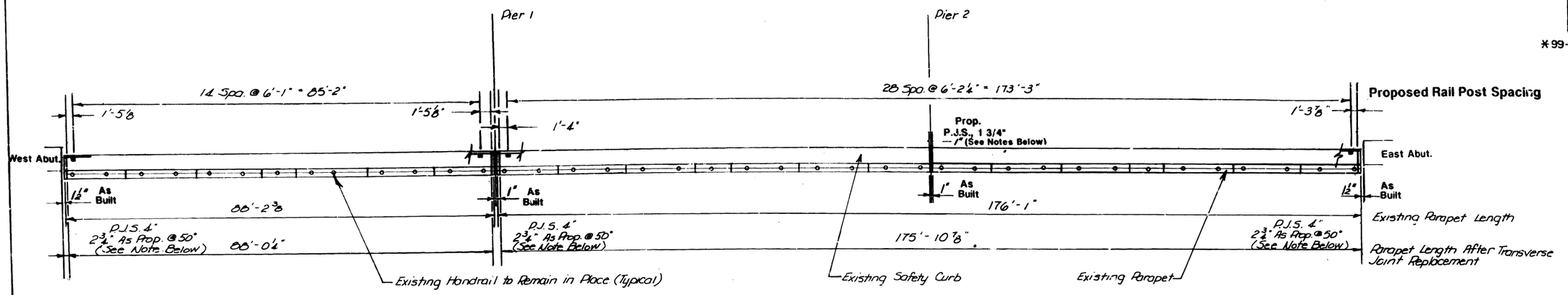

NORTH PARAPET
PROPOSED RAIL POST SPACING

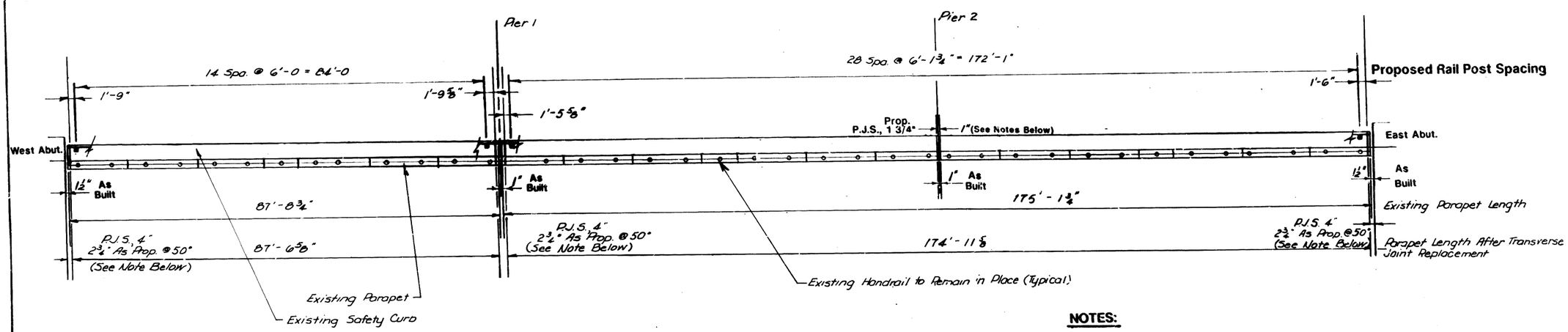

SOUTH PARAPET
PROPOSED RAIL POST SPACING

* The clearance for each 100' of the bridge between the nearest fixed bearings each way from the joint shall be reduced ⅛" from that amount specified, for each 15° that the temperature at the time of placing exceeds 30° F, and increased ⅛" from that amount specified for each 15° F that the temperature at the time of placing is below 50° F. (See Art. 503.07 of the Standard Specifications for Road and Bridge Construction, I.D.O.T., July 1, 1988.)

DETAIL OF PROPOSED RAIL POST SPACING

(Use In Conjunction With Standard 2399-1)

NOTES:

Total Movement of Expansion Joints Due to Variance in Temperature, is as Follows: *

West Abut.
-30 F: 2 3/16"
130 F: 3 5/16"

Pier 1
-30 F: 2 3/16"
130 F: 3 5/16"

Pier 2
Fixed Joint; No Variance

East Abut.
-30 F: 2 3/16"
130 F: 3 5/16"

BILL OF MATERIALS

ITEM	UNIT	QUANTITY
Steel Bridge Rail	Lin.Ft.	527

REVISIONS	
NAME	DATE

ILLINOIS DEPARTMENT OF TRANSPORTATION

F.A.I. - 80
BRIDGE REHABILITATION
STRUCTURE NO. 099-0063

DECK DETAILS

SCALE: VERT. HORIZ.
DATE
DRAWN BY
CHECKED BY

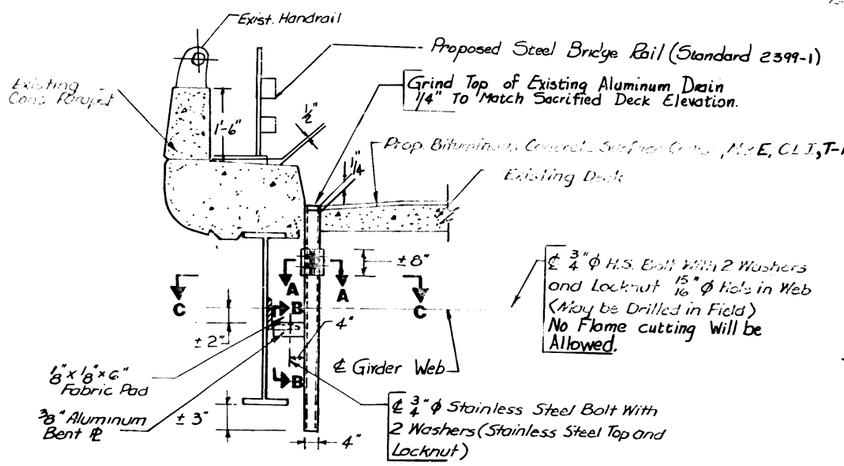

SECTION AT PARAPET

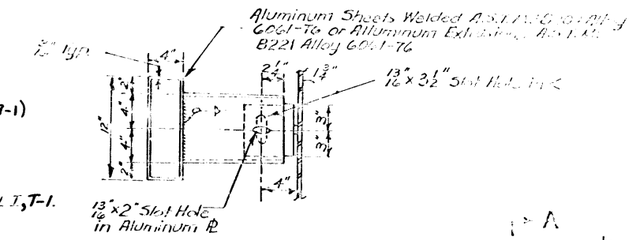

SECTION A-A

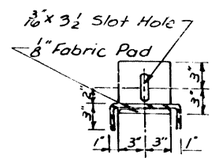

SECTION B-B

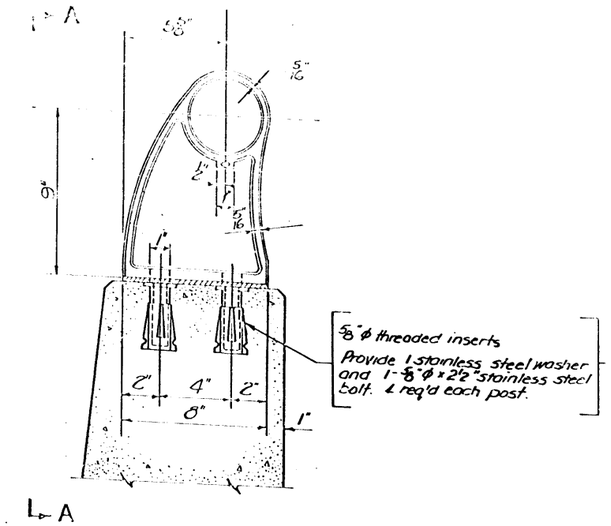

SECTION AT RAIL POST

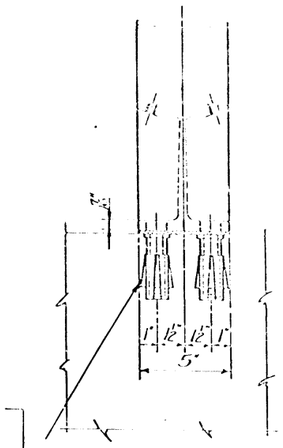

VIEW A-A

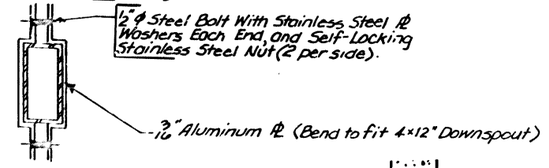

SECTION C-C

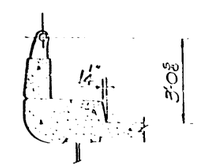

SECTION THRU CURB

NOTES

The Exterior Surfaces of the Aluminum Drains Shall be Cleaned and Given a Washcoat Pretreatment. This Shall be followed by the Lead and Chromate Free Alkyd Paint System. See Special Provisions.

BILL OF MATERIALS		
ITEM	UNIT	QUANT.
Deck Drain to be Extended	Each	42

Note:
If the existing deck drain extends through the deck at an angle the contractor shall fabricate the aluminum drain extension with an angle to extend the drain vertically.

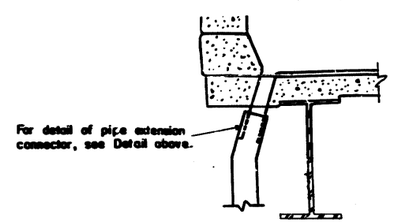

DETAIL A

The Removal and Remounting of the existing handrail shall be incidental to Concrete Removal.

DETAIL OF DECK DRAIN EXTENSION

REMOVAL AND REMOUNTING OF HANDRAIL

REVISIONS	
NAME	DATE

ILLINOIS DEPARTMENT OF TRANSPORTATION
F.A.I-80
BRIDGE REHABILITATION
STRUCTURE NO. 099-0063
DECK DETAILS

SCALE VERT HORIZ
DATE
DRAWN BY
CHECKED BY

STATE OF ILLINOIS
DEPARTMENT OF TRANSPORTATION

ROUTE NO.	SECTION	COUNTY	TOTAL SHEETS	SHEET NO.
F.A.I.-80	*	WILL	181	193

*99-4RS-2 & 99-4(B-1, HB, HB-1 & VB) BR-88

SHEET 10 OF 14

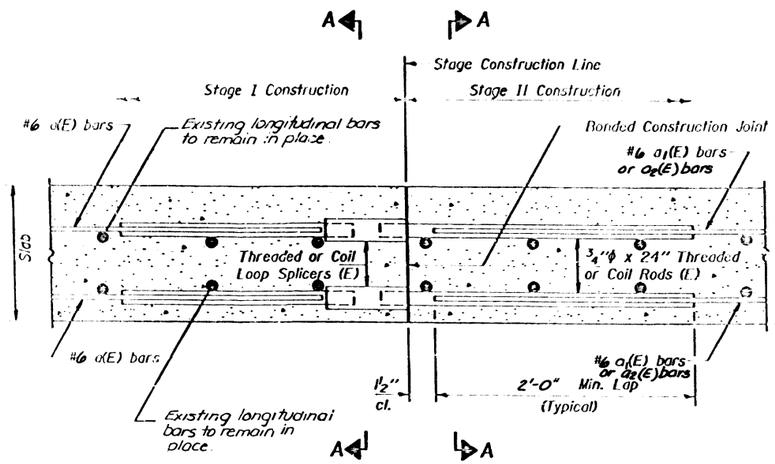

SECTION THRU SLAB

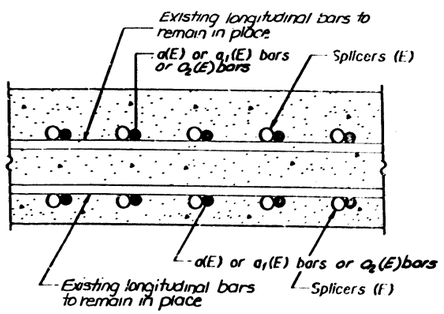

SECTION A-A

SPLICER DETAILS
(No. Req'd. 104)

Cost Incidental to Reinforcement Bars (Epoxy Coated).

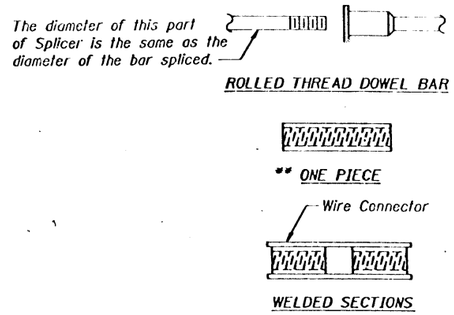

SPLICER ALTERNATIVES

** Heavy Hex Nuts conforming to ASTM A 563, Grade C, D or DH may be used.

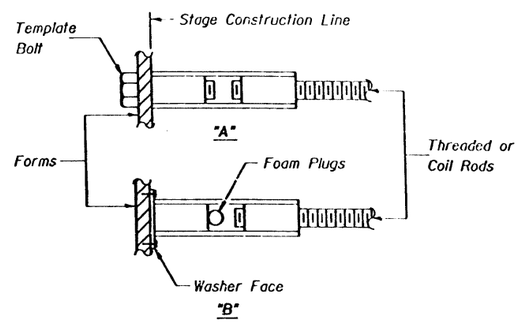

INSTALLATION AND SETTING METHODS

"A" : Set splicer by means of a template bolt.
"B" : Set splicer by nailing to wood forms or cementing to steel forms.
(E) : Indicates epoxy coating.

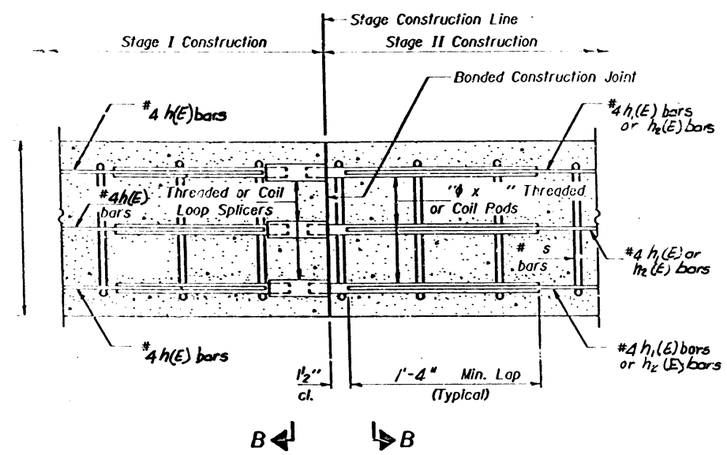

SECTION THRU ABUTMENTS AND PIERS

NOTES

Steel Splicer (Coupler) assembly shall be of an approved type and shall develop in tension at least 125 percent of the yield strength of the lapped reinforcement bars.

Steel Splicer rods shall be of minimum 60 ksi yield strength, threaded or coiled full length and have effective tensile stress area equal to or greater than that of the lapped reinforcement bars.

All reinforcement bars shall be lapped and tied to the splicer rods.

Splicer (coupler) assembly in the slab shall be epoxy coated in accordance with the requirements for reinforcement bars.

Other systems of similar design may be submitted to the Engineer for approval. Approval shall be based on certified test results from an approved testing laboratory that the proposed splicer (coupler) assembly satisfies the following requirements:

① Minimum Capacity (Tension in kips) = $1.25 \times f_y \times A_1$

② Minimum *Pull-out Strength (Tension in kips) = $1.25 \times f_{s_{allow}} \times A_1$

Where f_y = Yield strength of lapped reinforcement bars in ksi.
$f_{s_{allow}}$ = Allowable tensile stress in lapped reinforcement bars in ksi (Service Load)
A_1 = Tensile stress area of lapped reinforcement bars.
* = 28 day concrete

Typical Splicer (Coupler) Assembly Sizes:

In Slab	#5 bar lap with 3/4"φ Splicer (Coupler) x 2'-0" Splicer Rods	Minimum Capacity = 23.0 kips-tension; Minimum Pull-out Strength = 9.2 kips-tension
	#6 bar lap with 15"φ Splicer (Coupler) x 2'-2" Splicer Rods	Minimum Capacity = kips-tension; Minimum Pull-out Strength = kips-tension
In Sub-Structure	#7 bar lap with 1"φ Splicer (Coupler) x 3'-5" Splicer Rods	Minimum Capacity = 45.1 kips-tension; Minimum Pull-out Strength = 18.0 kips-tension
	#8 bar lap with 1¼"φ Splicer (Coupler) x 4'-6" Splicer Rods	Minimum Capacity = 58.9 kips-tension; Minimum Pull-out Strength = 23.6 kips-tension

DESIGNED	
CHECKED	
DRAWN	
CHECKED	

19
EXAMINED
ENGINEER OF BRIDGE DESIGN
PASSED
ENGINEER OF BRIDGES AND STRUCTURES
APPROVED
DIRECTOR OF HIGHWAYS

BSD-1 6-1-89

ILLINOIS DEPARTMENT OF TRANSPORTATION
F.A.I.-80
BRIDGE REHABILITATION
STRUCTURE NO. 099-0063
BAR SPLICER (COUPLER) DETAILS AT STAGE CONSTRUCTION

SCALE: VERT. HORIZ.
DRAWN BY
DATE
CHECKED BY

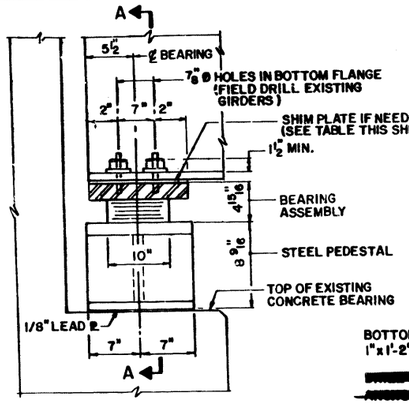

ELEVATION AT ABUTMENT

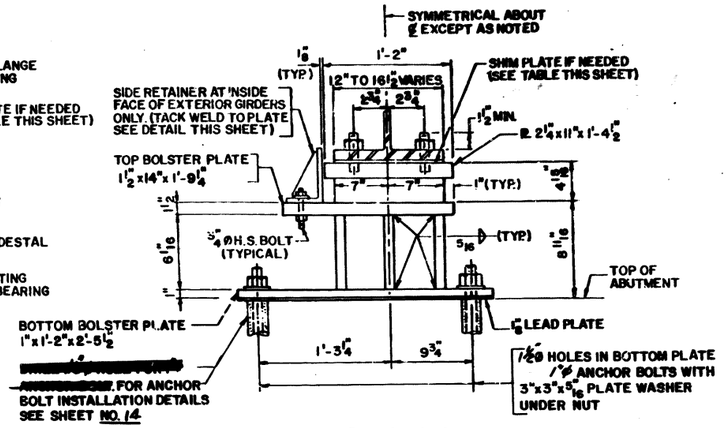

SECTION A-A
(SHOWING EXTERIOR GIRDER)

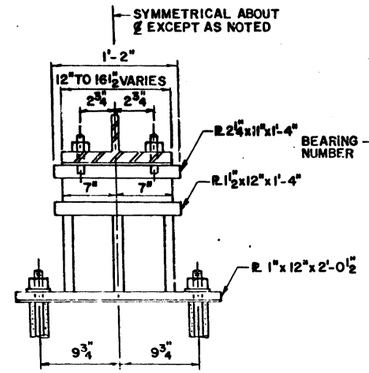

SECTION A-A
(SHOWING INTERIOR GIRDER)

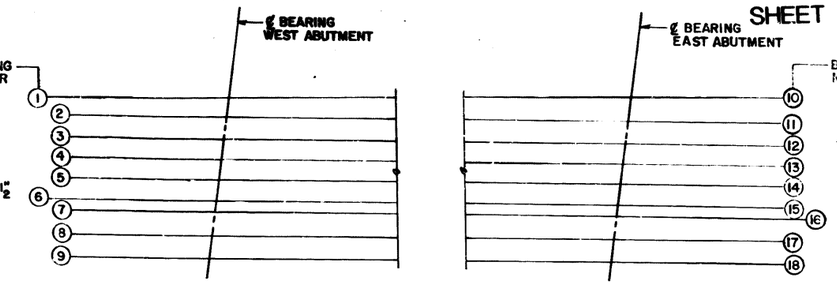

WEST BOUND
NORTH BRIDGE

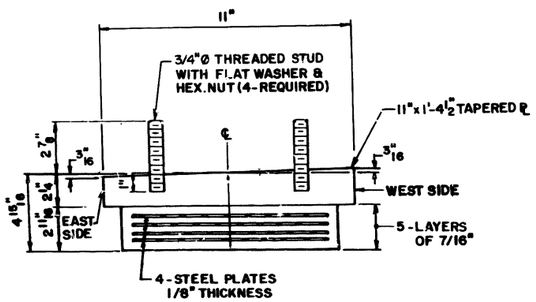

BEARING ASSEMBLY
F.A.I.-80 OVER HICKORY CREEK
EAST AND WEST ABUTMENTS

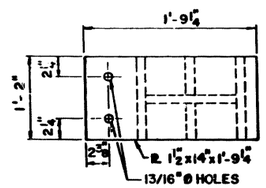

PLAN
TOP PLATE

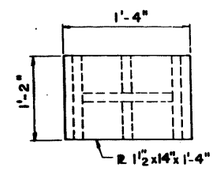

PLAN
TOP PLATE

NORTH BRIDGE (WEST BOUND)

BEARING NUMBER	1	2	3	4	5	6	7	8	9
THICKNESS OF SHIM PLATE	0	0	0	0	0	0	5/8"	5/8"	0
BEARING NUMBER	10	11	12	13	14	15	16	17	18
THICKNESS OF SHIM PLATE	0	0	0	0	0	0	1/8"	0	0

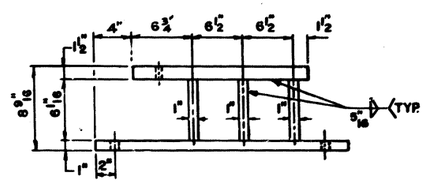

ELEVATION
(SHOWING EXTERIOR PEDESTAL)

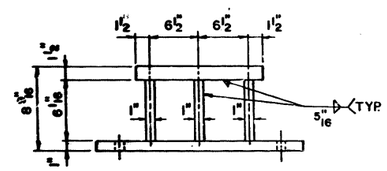

ELEVATION
(SHOWING INTERIOR PEDESTAL)

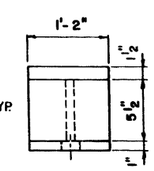

END VIEW
(TYPICAL)

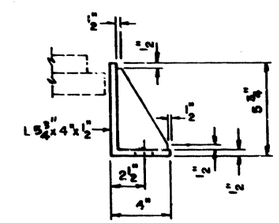

ELEVATION

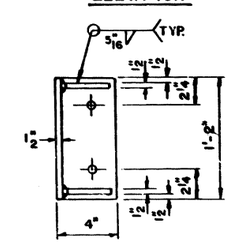

PLAN

SIDE RETAINER

BILL OF MATERIAL

ITEM	UNIT	TOTAL
ELASTOMERIC BEARING ASSEMBLY TYPE I	EACH	18
JACK AND REMOVE EXISTING BEARINGS	EACH	18
FURNISHING AND ERRECTING STRUCTURAL STEEL	LBS	4770

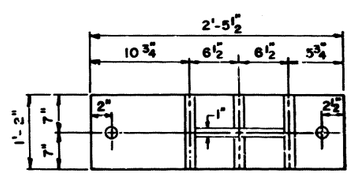

PLAN
BOTTOM PLATE

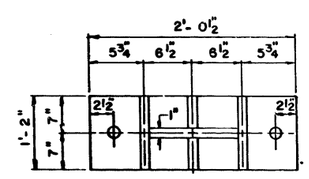

PLAN
BOTTOM PLATE

TYPE I
ELASTOMERIC EXPANSION BEARING

NOTES:

BOLSTER ASSEMBLY HEIGHT OF 8 9/16" DOES NOT INCLUDE SHIM PLATE THICKNESS.

FOR SHIM PLATE THICKNESSES SEE TABLE THIS SHEET.

SHIM PLATES SHALL NOT BE PLACED UNDER BEARING ASSEMBLY.

EQUIVALENT ROLLED ANGLE WITH STIFFENERS WILL BE ALLOWED IN LIEU OF WELDED PLATES, **FOR SIDE RETAINERS.**

NEW STEEL PEDESTALS AND ANCHOR BOLTS SHALL BE PAID FOR AS FURNISHING AND ERECTING STRUCTURAL STEEL.

SIDE RETAINERS AND BOLTS SHALL BE INCLUDED IN F & E STRUCTURAL STEEL.

EXISTING ANCHOR BOLTS SHALL BE CUT OFF FLUSH WITH THE CONCRETE SURFACE, GROUND SMOOTH AND SEALED WITH EPOXY. COST INCIDENTAL TO COST OF NEW BEARING ASSEMBLIES.

REVISIONS	
NAME	DATE

ILLINOIS DEPARTMENT OF TRANSPORTATION

F.A.I. 80
BRIDGE REHABILITATION
STRUCTURE NO. 099-0063
ELASTOMERIC BEARING

SCALE: VERT. HORIZ.
DRAWN BY M.V.T
DATE
CHECKED BY

Revised: Changed anchor bolt hole size to 1½" & bolt size to 1". 3-22-90 ENR

F.A. RTE.	SECTION	COUNTY	TOTAL SHEETS	SHEET NO.
I-80	*	WILL	181	145
STA.		TO STA.		
FED. ROAD DIST. NO. 7	ILLINOIS	FED. AID PROJECT		

*99-4RS-2 & 99-4(3-1,HB,HB-1&VB)BR-98

SHEET 12 OF 14

WEST ABUTMENT

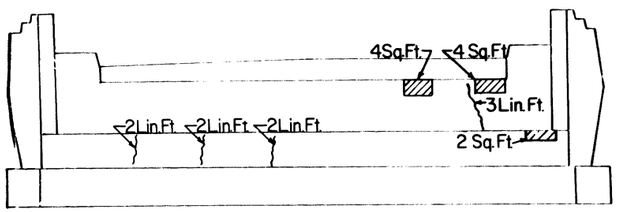

PIER NO. 1 WEST VIEW

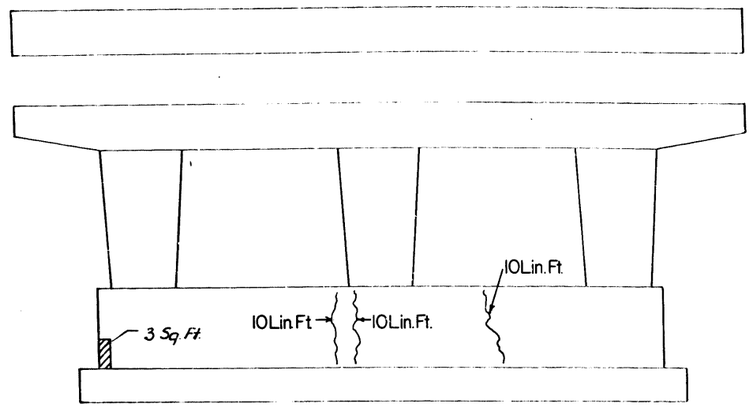

PIER NO. 2 WEST VIEW

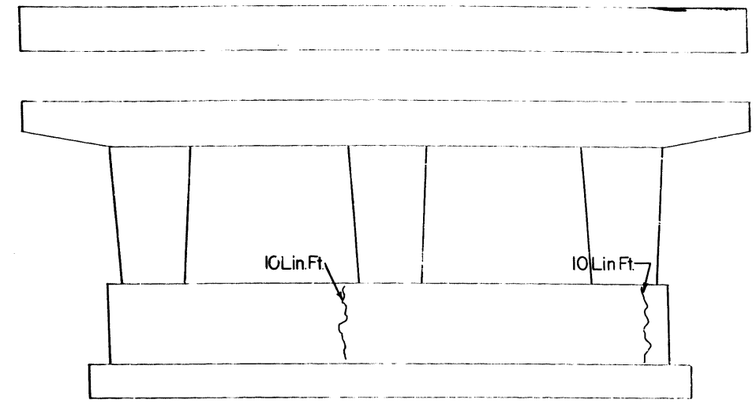

EAST ABUTMENT

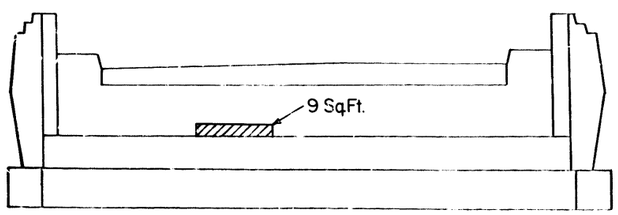

PIER NO. 1 EAST VIEW

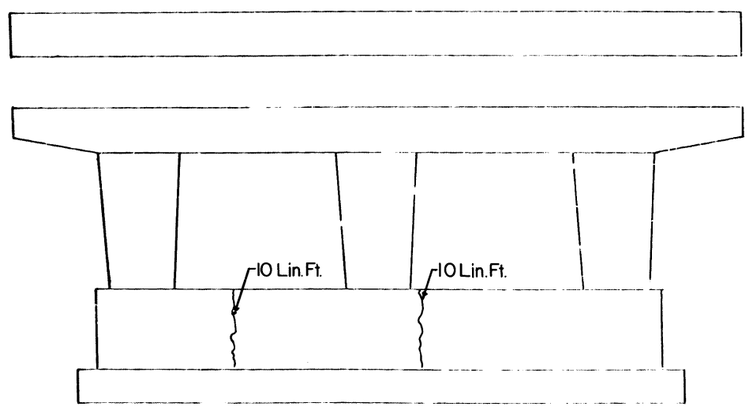

PIER NO. 2 EAST VIEW

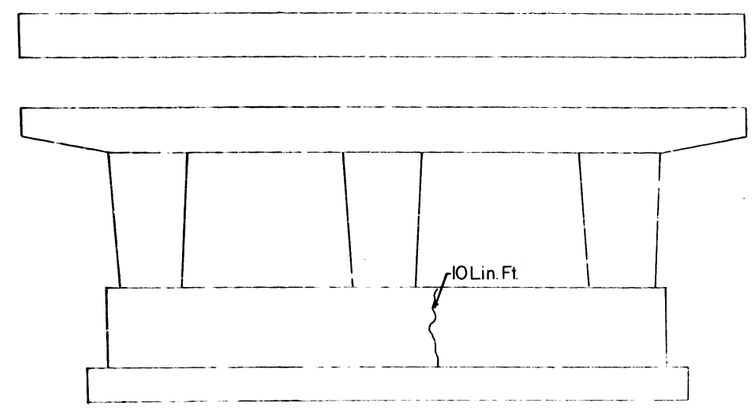

LEGEND

Formed Concrete Repair (Depth < 5")

Epoxy Crack Sealing

BILL OF MATERIALS

ITEM	UNIT	QUANTITY
Epoxy Crack Sealing	Lin. Ft.	69
FORMED CONC. REPAIR	Sq. Ft.	22
(DEPTH ≤ 5")		

REVISIONS	
NAME	DATE

ILLINOIS DEPARTMENT OF TRANSPORTATION
F.A.I. 80
BRIDGE REHABILITATION
STRUCTURE NO. 099-0063
ABUTMENTS & PIERS

SCALE: VERT. HORIZ.

DATE

DRAWN BY CP

CHECKED BY

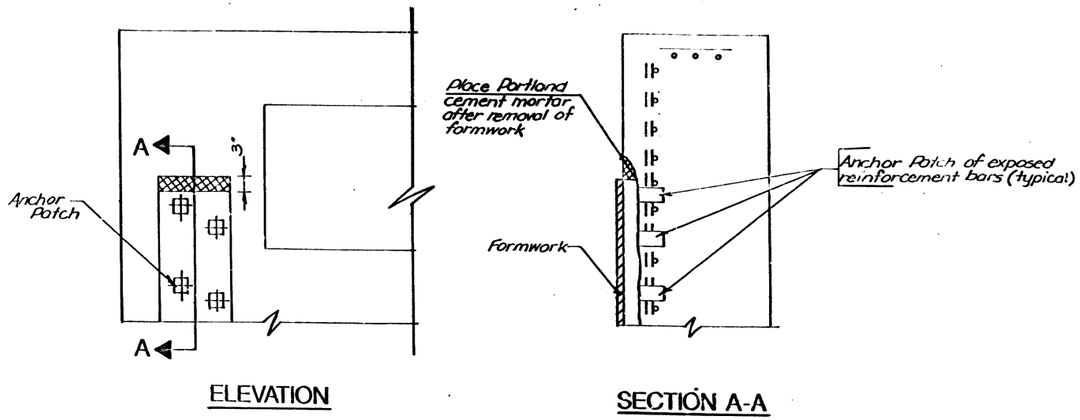

EPOXY MORTAR REPAIR
(DEPTH 1-1/2")

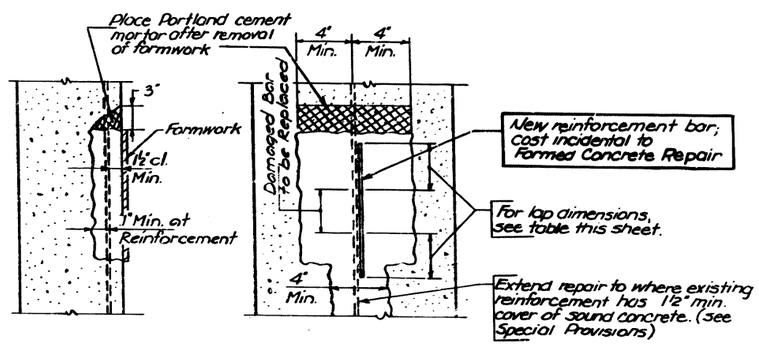

FORMED CONCRETE REPAIR DETAIL WITH REINFORCEMENT

Notes:
Existing reinforcement having 20% or more of cross-sectional area lost due to corrosion or damaged during concrete removal shall be replaced by new reinforcement lapped as shown or noted.

All formed concrete repair dimensions are approximate.

LAP DIMENSIONS

Bar Size	Lap Length
#4	1'-4"
#5	1'-8"
#6	2'-0"
#7	2'-9"

REVISIONS	
NAME	DATE

ILLINOIS DEPARTMENT OF TRANSPORTATION
F.A.I. - 80
BRIDGE REHABILITATION
STRUCTURE NO. 099 - 0063

DETAIL OF
FORMED CONCRETE REPAIR

SCALE: VERT. HORIZ. DRAWN BY
DATE CHECKED BY

The Illinois Coil-Lock Anchor Bolt is a proprietary item which is the property of the Illinois Department of Transportation. Use, reproduction or disclosure without express written permission is prohibited and protected under Federal copyright laws. The production and the fabrication of this bolt for use on highway projects in the State of Illinois shall be permitted and there shall be no incurred charges or fees to the manufacturer or the fabricator for producing or fabricating this bolt.

STATE OF ILLINOIS
DEPARTMENT OF TRANSPORTATION

ROUTE NO.	SECTION	COUNTY	TOTAL SHEETS	SHEET NO.
F.A.I.-80	*	WILL	181	147
FED. ROAD DIST. NO. 7		ILLINOIS	FED. AID PROJECT-	

SHEET NO.
SHEETS

* 99-4RS-2 & 99(38, 4B-1, 4HB, 4HB-1, 4VB) BR-88

Sheet 14 Of 14

D	E	H	K	"d"
1"	1 1/8"	13/16"	1 3/4"	1/4"
1 1/2"	1 5/8"	1 5/16"	2 1/8"	2"
2"	2 1/8"	1 13/16"	2 7/8"	2"
2 1/2"	2 5/8"	2 5/16"	3 3/8"	1"

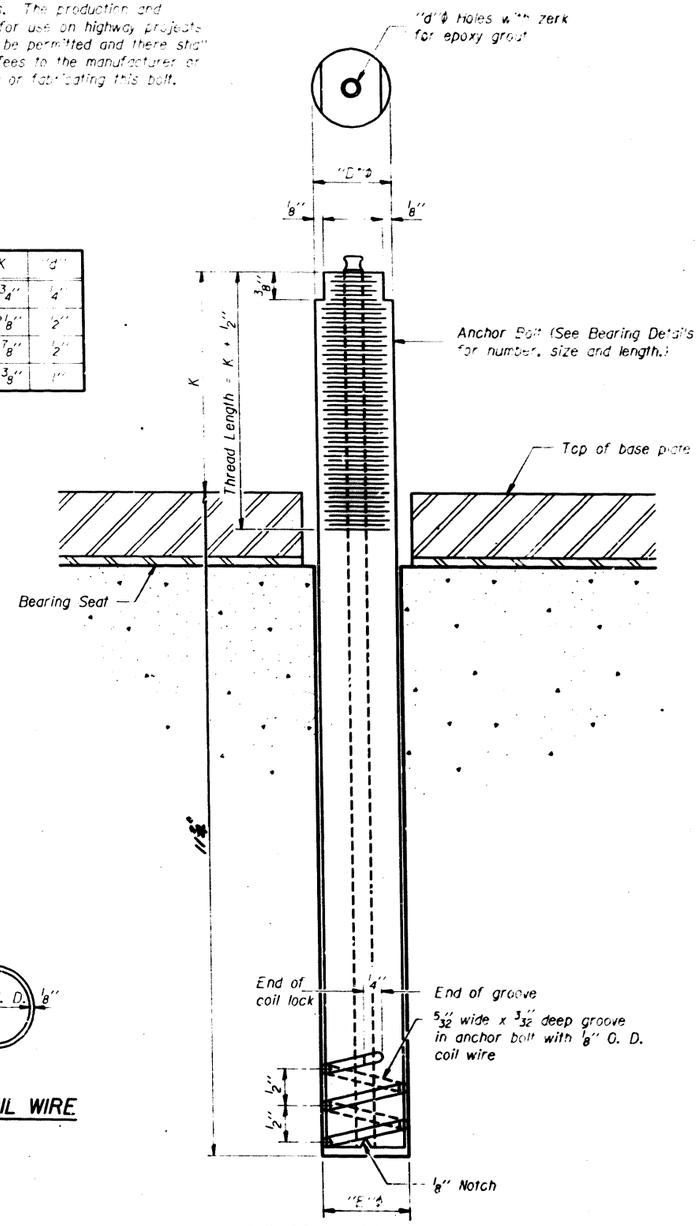

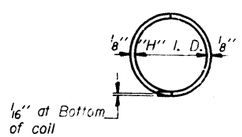

PLAN-COIL WIRE

ILLINOIS COIL-LOCK ANCHOR BOLT

MATERIALS FOR ILLINOIS COIL-LOCK ANCHOR BOLT

The anchor bolt shall be fabricated from cold drawn or hot finished seamless carbon steel mechanical tubing conforming to ASTM A519, Grade 1026 and supplied with hexagonal nuts and cut washers.

The coil wire shall be made of any suitable soft steel wire.

The finished anchor bolt shall be cleaned of rust and other foreign materials and wrapped or packaged to prevent contamination until they are installed.

The epoxy grout shall be a two-component, epoxy resin bonding system conforming to ASTM C881, Type I, Grade I and of a Class suitable for the temperature at installation.

INSTALLATION PROCEDURE for the ILLINOIS COIL-LOCK ANCHOR BOLT

1. With the coil wire in place, the bolt shall be inserted into the hole and turned clockwise to a snug fit in the hole. Nut and washer shall be placed on the bolt. The nut shall be tensioned until the steel base plates are held securely to the concrete bearing seat.
2. Epoxy grout shall be pumped through the zerk fitting with a pressure gun. Pumping shall continue until the epoxy overflows the hole around the bolt shank. After pumping is discontinued, excess epoxy shall be immediately wiped off.

ALTERNATE ANCHOR BOLTS

The Contractor may use, at his option, the capsule or the adhesive cartridge type anchor rods that have been previously tested and given a prior approval by the Department. The Contractor shall install these anchor rods in pre-drilled holes in accordance with the manufacturer's recommendations and procedures.

The capsule or the adhesive cartridge type anchor rods shall be a two part system composed of:

1. A threaded rod stud with nut and washer conforming to ASTM A307.
2. A sealed glass capsule or a sealed glass adhesive cartridge containing premeasured amounts of the adhesive chemical.

GENERAL NOTES

Holes in the masonry for anchor bolts shall be drilled through the base plates to the diameter and depth shown or in accordance with the manufacturer's recommendation after beams or girders have been erected and adjusted.

Prior to setting the bolts, the holes shall be dry and all dust and loose particles shall be removed by the use of compressed air or vacuuming.

The anchor bolts, furnished and installed and including the epoxy grout or capsules shall not be paid for separately, but shall be included in the unit bid price for "Furnishing and Erecting Structural Steel".

DESIGNED	
CHECKED	
DRAWN	
CHECKED	

19

EXAMINED

ENGINEER OF BRIDGE DESIGN

PASSED

ENGINEER OF BRIDGES AND STRUCTURES

APPROVED

DIRECTOR OF HIGHWAYS

ABB-1 12-1-83

ANCHOR BOLT DETAILS FOR BEARINGS

Str. No. 099-0063