11-06-2020 LETTING ITEM 038

F.A.I. RTE.	SECTION	COUNTY	TOTAL SHEETS	SHEET NO.
72	(84-9-4) BP	SANGAMON	20	1
	ILLINOIS	CONTRACT NO. 72L85		

STATE OF ILLINOIS
DEPARTMENT OF TRANSPORTATION

D-96-051-20

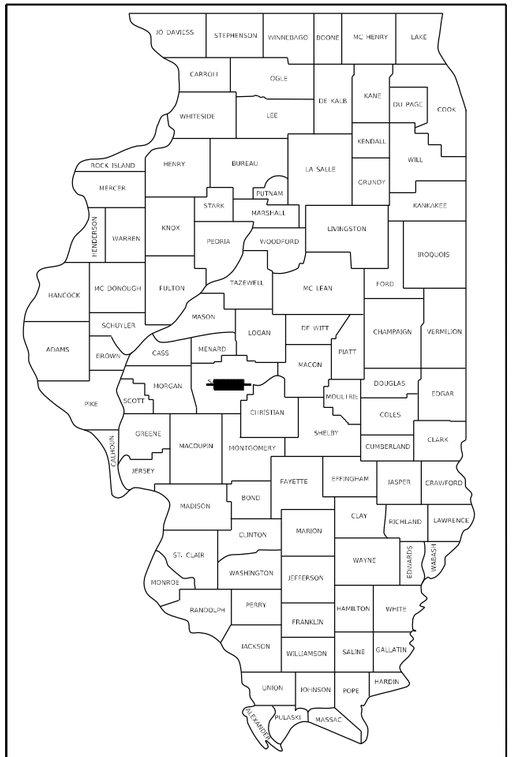

LOCATION OF SECTION INDICATED THUS: –

FOR INDEX OF SHEETS, SEE SHEET NO. 2

PROPOSED
HIGHWAY PLANS

FAI ROUTE 72 (I–72, US 36)
SECTION (84–9–4) BP
PROJECT NHPP–G4RW(196)
BRIDGE PAINTING
SANGAMON COUNTY

C–96–082–20

N

LOCATION #3
SN 084-0104
2ND ST. OVER I-72
0.5 MI W I-72/6TH ST INT.

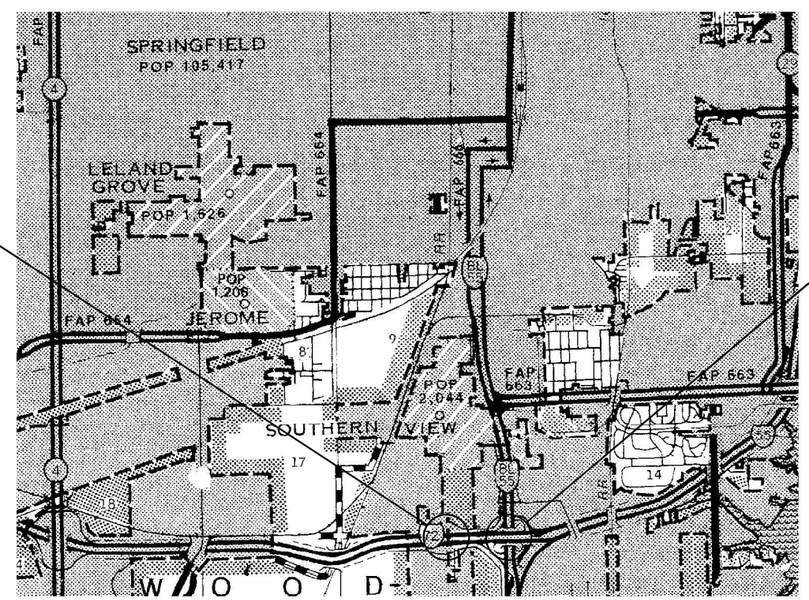

LOCATIONS #1 & #2
SN 084-0076 & 0077
I-72 WB & EB OVER 6TH ST.
AT I-72/6TH ST INT.

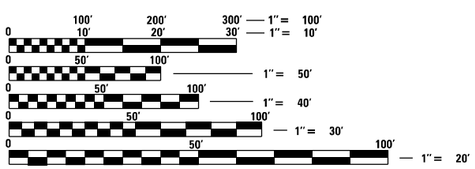

FULL SIZE PLANS HAVE BEEN PREPARED USING STANDARD ENGINEERING SCALES. REDUCED SIZED PLANS WILL NOT CONFORM TO STANDARD SCALES. IN MAKING MEASUREMENTS ON REDUCED PLANS, THE ABOVE SCALES MAY BE USED.

J.U.L.I.E.
JOINT UTILITY LOCATION INFORMATION FOR EXCAVATORS
1–800–892–0123
OR 811

STATE OF ILLINOIS
DEPARTMENT OF TRANSPORTATION

SUBMITTED August 12 20 20
REGIONAL ENGINEER
October 2, 2020
ENGINEER OF DESIGN AND ENVIRONMENT
October 2, 2020
DIRECTOR OF HIGHWAYS PROJECT IMPLEMENTATION

BRIDGE MAINTENANCE ENGINEER: BRANDON DUDLEY – (217) 785–9290

GROSS LENGTH = x.xx FT. = x.xxx MILE
NET LENGTH = x.xx FT. = x.xxx MILE

PRINTED BY THE AUTHORITY
OF THE STATE OF ILLINOIS

CONTRACT NO. 72L85

INDEX OF SHEETS

HIGHWAY STANDARDS

000001-07
001006
701101-05
701106-02
701400-09
701401-12
701411-09
701422-10
701428-01
701901-08
BLR 21-9

GENERAL NOTES:

1. WORK SHALL CONSIST OF BLASTING AND PAINTING STRUCTURAL STEEL AT LOCATIONS DESCRIBED IN THE SPECIAL PROVISIONS. CLEANING AND PAINTING OF THE EXISTING STRUCTURAL STEEL SHALL BE AS SPECIFIED IN THE SPECIAL PROVISIONS FOR "CLEANING AND PAINTING EXISTING STEEL STRUCTURES". ALL AREAS TO BE PAINTED (EXCEPT OVERCOATED AREAS CALLED OUT IN THE SPECIAL PROVISIONS) SHALL BE CLEANED PER NEAR WHITE BLAST CLEANING PER SSPC SP 10. ALL EXISTING STEEL CLEANED SHALL BE PAINTED ACCORDING TO THE REQUIREMENTS OF PAINT SYSTEM 1 - OZ/E/U. THE COLOR OF THE FINAL FINISH COATS SHALL BE AS DESCRIBED IN THE SPECIAL PROVISIONS.

2 THE USE OF AIR MONITORS WILL BE REQUIRED AT ALL LOCATIONS.

3. THE SSPC-QP-1 AND SSPC-QP2 PAINTING CONTRACTOR CERTIFICATIONS WILL BE REQUIRED.

4. CARE SHALL BE TAKEN NOT TO DAMAGE RUBBER BEARING OR JOINT COMPONENTS DURING BLASTING AND CLEANING OPERATIONS. ANY DAMAGE TO THESE COMPONENTS SHALL BE REPAIRED AT THE CONTRACTOR'S EXPENSE. RUBBER COMPONENTS SHALL NOT BE PAINTED.

5. UPON COMPLETION OF PAINTING OPERATIONS, THE CONTRACTOR SHALL REMOVE ALL DEBRIS FROM PIER OR ABUTMENT CAPS UPON WHICH PAINTING OPERATIONS TOOK PLACE. FINAL CLEANUP SHALL BE CONSIDERED INCIDENTAL TO THE PAINT PAY ITEM FOR THE RESPECTIVE LOCATION. THE ENGINEER SHALL HAVE THE RIGHT TO WITHOLD PAYMENT UNTIL SATISFACTORY CLEANUP IS ACHIEVED.

STATE OF ILLINOIS
DEPARTMENT OF TRANSPORTATION
DIVISION OF HIGHWAYS
DISTRICT 6

EXAMINED August 6 20 20
ENGINEER OF OPERATIONS

EXAMINED August 4 20 20
ENGINEER OF PROJECT IMPLEMENTATION

EXAMINED August 4 20 20
ENGINEER OF PROGRAM DEVELOPMENT

MODEL: Default
FILE NAME: G:\OPERATIONS\Bridges\Bridgeplans_CAD\72L85 - 6th St paintingplansheet.dgn

USER NAME = dudleybm	DESIGNED -	REVISED -	
	DRAWN -	REVISED -	
PLOT SCALE = 100.0000 ' / in.	CHECKED -	REVISED -	
PLOT DATE = 8/13/2020	DATE -	REVISED -	

STATE OF ILLINOIS
DEPARTMENT OF TRANSPORTATION

INDEX OF SHEETS, STANDARDS, GENERAL NOTES, & SIGNATURES

SCALE: SHEET OF SHEETS STA. TO STA.

F.A.I. RTE.	SECTION	COUNTY	TOTAL SHEETS	SHEET NO.
72	(84-9-4) BP	SANGAMON	20	2
		CONTRACT NO. 72L85		
	ILLINOIS	FED. AID PROJECT		

CODE NO.	ITEM	UNIT	TOTAL QUANTITY	0-01374-6001 NHPP 90/10 SN 084-0076 0047-URBAN SANGAMON	0-01374-6001 NHPP 90/10 SN 084-0077 0047-URBAN SANGAMON	0-01374-6001 NHPP 90/10 SN 084-0104 0047-URBAN SANGAMON
67100100	MOBILIZATION	L SUM	1	0.33	0.33	0.34
70100320	TRAFFIC CONTROL AND PROTECTION, STANDARD 701422	L SUM	1	0.5	0.5	0
70100420	TRAFFIC CONTROL AND PROTECTION, STANDARD 701411	EACH	4	1	2	1
70100800	TRAFFIC CONTROL AND PROTECTION, STANDARD 701401	L SUM	1	0.33	0.33	0.34
70107025	CHANGEABLE MESSAGE SIGN	CAL DA	180	75	15	90
Z0007101	CONTAINMENT AND DISPOSAL OF LEAD PAINT CLEANING RESIDUES NO. 1	L SUM	1	1	0	0
Z0007102	CONTAINMENT AND DISPOSAL OF LEAD PAINT CLEANING RESIDUES NO. 2	L SUM	1	0	1	0
Z0007103	CONTAINMENT AND DISPOSAL OF LEAD PAINT CLEANING RESIDUES NO. 3	L SUM	1	0	0	1
Z0010501	CLEANING AND PAINTING STEEL BRIDGE NO. 1	L SUM	1	1	0	0
Z0010502	CLEANING AND PAINTING STEEL BRIDGE NO. 2	L SUM	1	0	1	0
Z0010503	CLEANING AND PAINTING STEEL BRIDGE NO. 3	L SUM	1	0	0	1
X7011800	TRAFFIC CONTROL AND PROTECTION, STANDARD BLR 21	L SUM	1	0	0	1

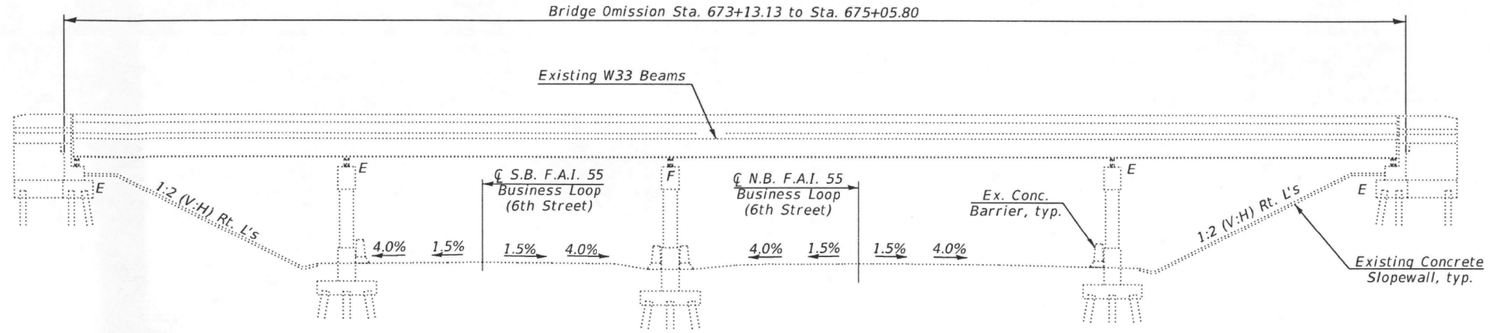

ELEVATION

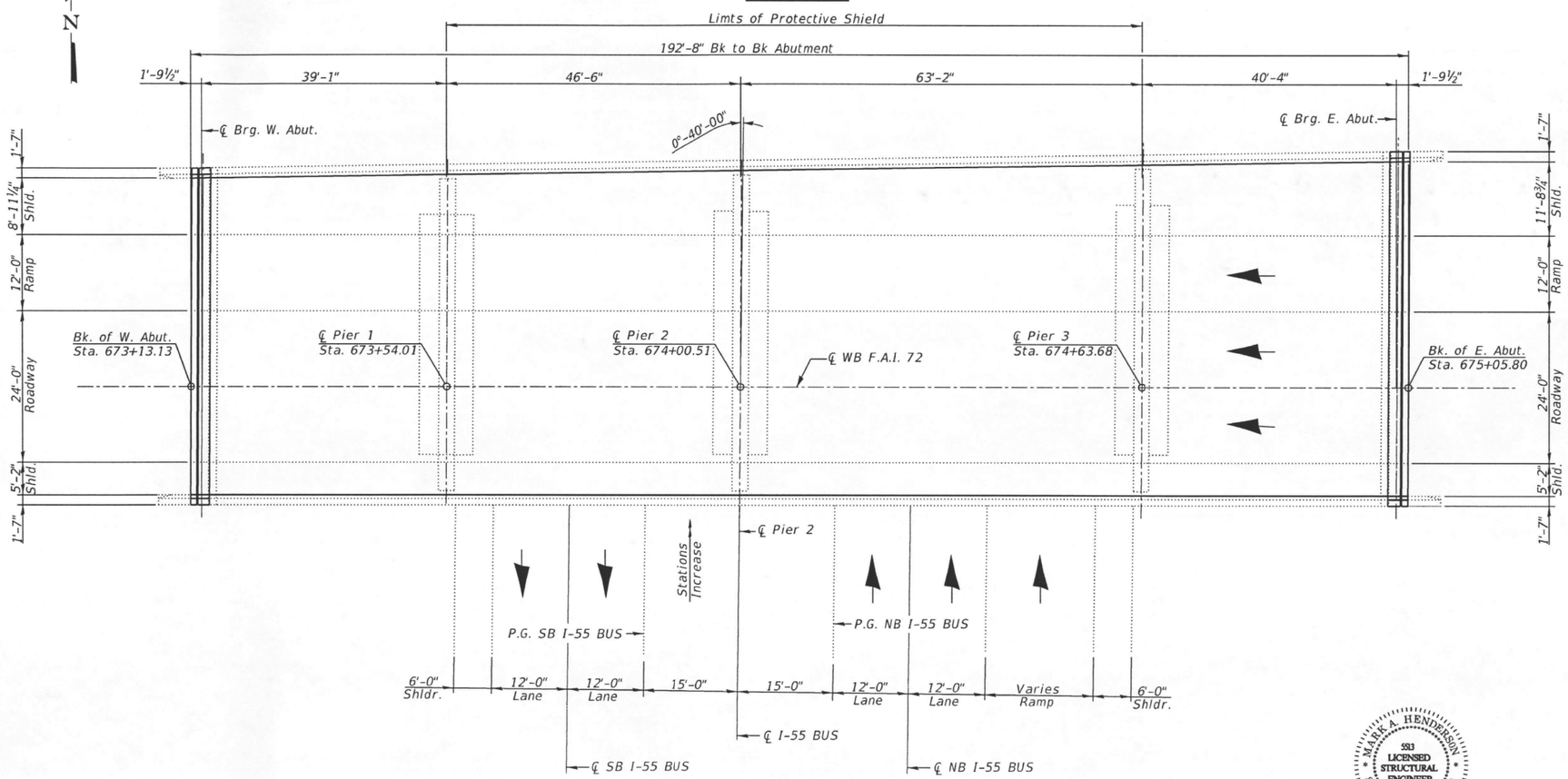

PLAN

* Dimensions at Back of Abutments

INDEX OF SHEETS

PROPOSED IMPROVEMENTS

1. Replace bearings at both abutments.
2. Replace joints at both abutments.
3. Repair portions of deck with full depth patches.
4. Scarify deck ¾" and install 2½" microsilica concrete overlay. Up to ¼" will be ground off the microsilica concrete overlay.
5. Substructure concrete repairs.

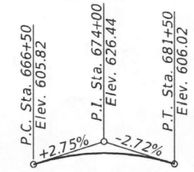

PROFILE GRADE

(At Median Edge of Pavement)

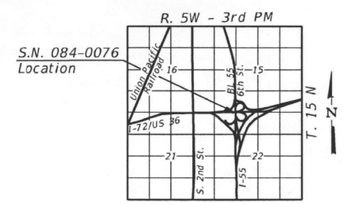

LOCATION SKETCH

MARK A. HENDERSON
593
LICENSED STRUCTURAL ENGINEER
STATE OF ILLINOIS

Mark A Henderson 2/4/19

Expiration Date: 11/30/2020

GENERAL PLAN & ELEVATION
WB I-72 (F.A.I. 72) OVER
6th STREET/I-55 BUS
SEC. (110)RS-2, (84-9)RS-7, BR
SANGAMON COUNTY
STATION 674+09.47
STRUCTURE NO. 084-0076

Veenstra & Kimm, Inc. Springfield, IL. Phone: (217)544-8033	USER NAME =	DESIGNED -	REVISED -
		CHECKED -	REVISED -
	PLOT SCALE =	DRAWN -	REVISED -
	PLOT DATE =	CHECKED -	REVISED -

STATE OF ILLINOIS
DEPARTMENT OF TRANSPORTATION

GENERAL PLAN & ELEVATION
STRUCTURE NO. 084-0076

SHEET NO. 1 OF 17 SHEETS

F.A.I. RTE.	SECTION	COUNTY	TOTAL SHEETS	SHEET NO.
*	(110)RS-2, (84-9)RS-7, BR	SANGAMON	152	72
		CONTRACT NO. 72J94		
		ILLINOIS FED. AID PROJECT		

* FAI 72, FAP 666, FAI 72 4 / I-72, I-55 BUS

USER NAME = dudleybm	DESIGNED -	REVISED -	
	DRAWN -	REVISED -	
PLOT SCALE = 100.0000 ' / in.	CHECKED -	REVISED -	
PLOT DATE = 8/13/2020	DATE -	REVISED -	

STATE OF ILLINOIS
DEPARTMENT OF TRANSPORTATION

EXISTING BRIDGE PLANS, SN 084-0076
(FOR INFORMATION ONLY)

SCALE: SHEET 1 OF 5 SHEETS STA. TO STA.

F.A.I. RTE.	SECTION	COUNTY	TOTAL SHEETS	SHEET NO.
72	(84-9-4) BP	SANGAMON	20	4
		CONTRACT NO. 72L85		
		ILLINOIS FED. AID PROJECT		

MODEL: Default
FILE NAME: C:\OPERATIONS\Bridges\Bridgeplans_CAD\72L85 - 6th St paintplansheet.dgn

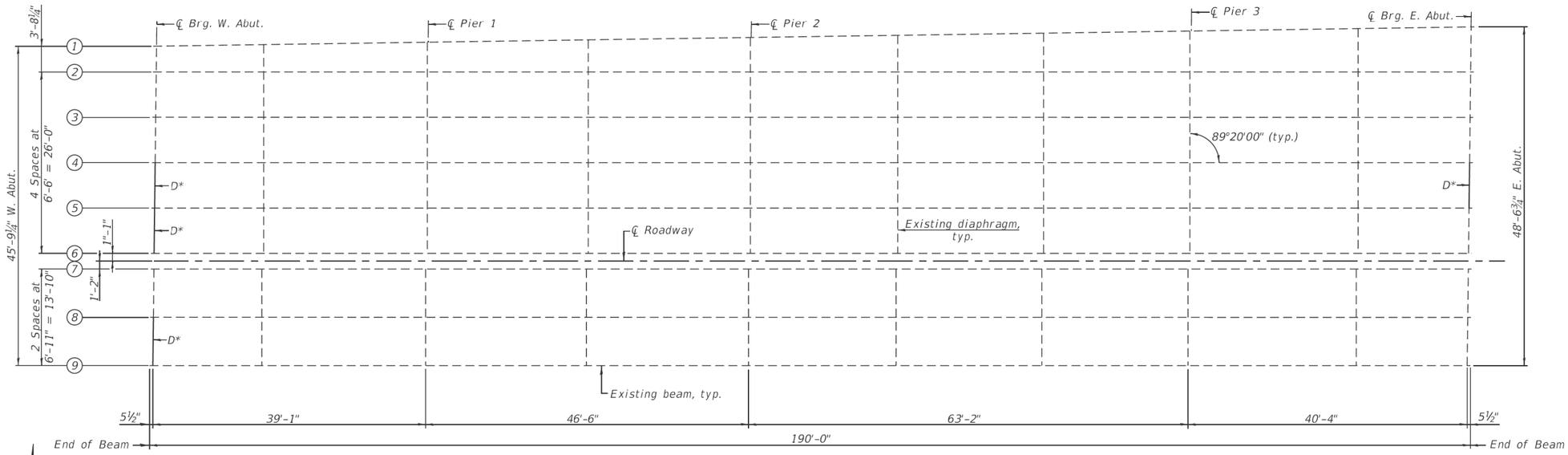

FRAMING PLAN

All beams are 33WF130

N

* Steel Diaphragms to be replaced.

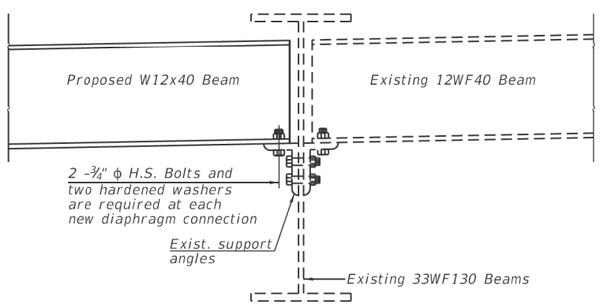

DIAPHRAGM D DETAIL

Notes:

The structural steel shall be galvanized after shop fabrication according to AASHTO M232.

All structural steel for the end diaphragms at the abutments shall conform to the requirements of AASHTO M270, Grade 50.

Any missing, loose or deteriorated rivets found in existing connections during construction shall be replaced with same size high strength bolts.

BILL OF MATERIAL

Item	Unit	Quantity
Furnishing and Erecting Structural Steel	Pound	1020

Veenstra & Kimm, Inc.
Springfield, IL. Phone: (217)544-8033

USER NAME =	DESIGNED -	REVISED -	
	CHECKED -	REVISED -	
PLOT SCALE =	DRAWN -	REVISED -	
PLOT DATE =	CHECKED -	REVISED -	

STATE OF ILLINOIS
DEPARTMENT OF TRANSPORTATION

STRUCTURAL STEEL DETAILS
STRUCTURE NO. 084-0076

SHEET NO. 10 OF 17 SHEETS

F.A.I. RTE.	SECTION	COUNTY	TOTAL SHEETS	SHEET NO.
•	(110)RS-2, (84-9)RS-7, BR	SANGAMON	152	81
		CONTRACT NO. 72J94		
	ILLINOIS	FED. AID PROJECT		

• FAI 72, FAP 666, FAI 72 4 / I-72, I-55 BUS

USER NAME = dudleybm	DESIGNED -	REVISED -	
	DRAWN -	REVISED -	
PLOT SCALE = 100.0000 ' / in.	CHECKED -	REVISED -	
PLOT DATE = 8/13/2020	DATE -	REVISED -	

STATE OF ILLINOIS
DEPARTMENT OF TRANSPORTATION

EXISTING BRIDGE PLANS, SN 084-0076
(FOR INFORMATION ONLY)

SCALE: SHEET 2 OF 5 SHEETS STA. TO STA.

F.A.I. RTE.	SECTION	COUNTY	TOTAL SHEETS	SHEET NO.
72	(84-9-4) BP	SANGAMON	20	5
		CONTRACT NO. 72L85		
	ILLINOIS	FED. AID PROJECT		

MODEL: Default
FILE NAME: G:\OPERATIONS\Bridges\Bridgeplans_CAD\72L85 - 6th St palmtopbansheet.dgn

STATE OF ILLINOIS
DEPARTMENT OF PUBLIC WORKS & BUILDINGS
DIVISION OF HIGHWAYS

ROUTE NO.	SEC.	COUNTY	TOTAL SHEETS	SHEET NO.
F.A. Rt. 196	84-3HB-4 84-3HB-4	Sangamon	34 25	14 11
FED. ROAD DIST. NO. 7	ILLINOIS	PROJECT		

SHEET 6 OF 19

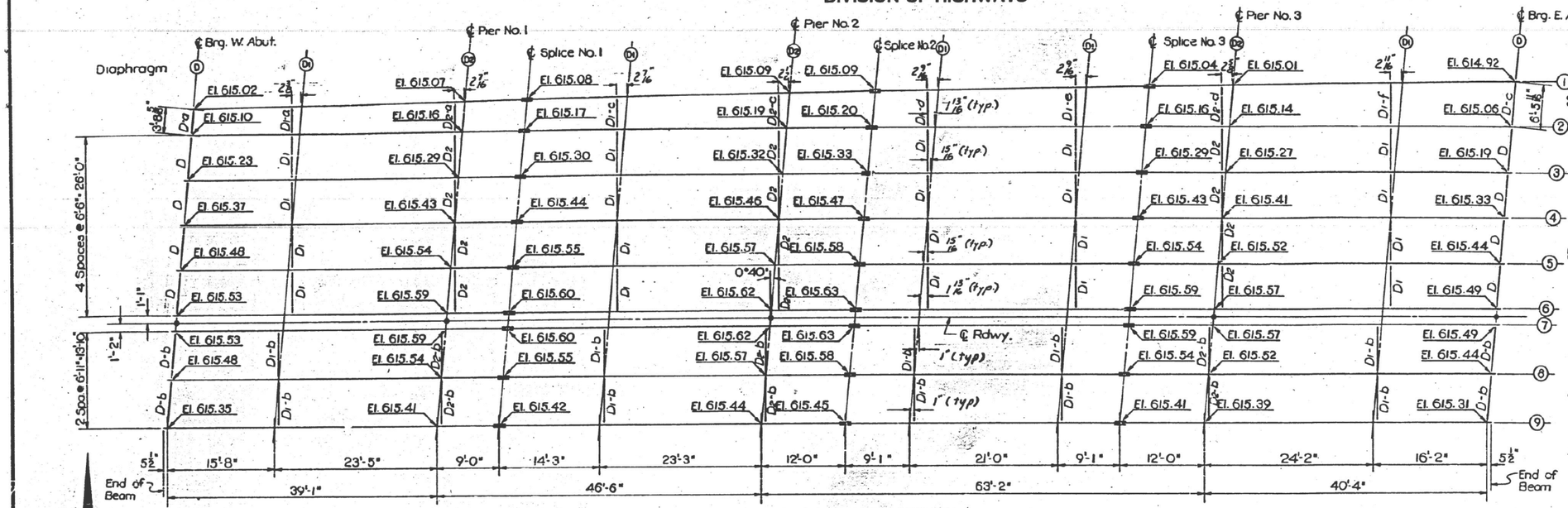

FRAMING PLAN – NORTH BRIDGE

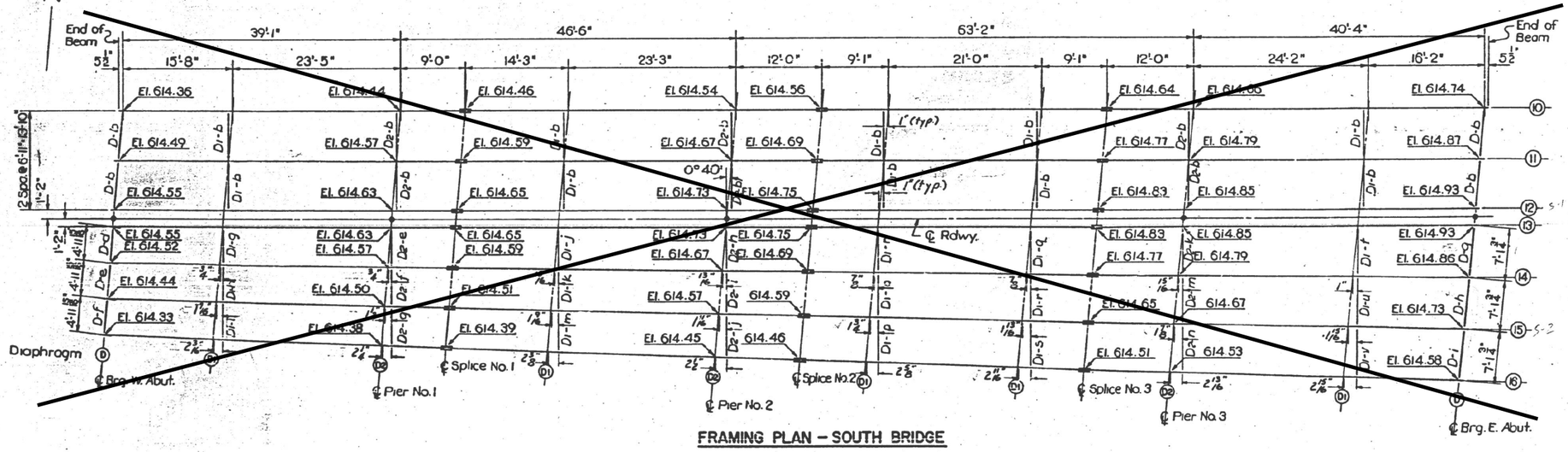

FRAMING PLAN – SOUTH BRIDGE

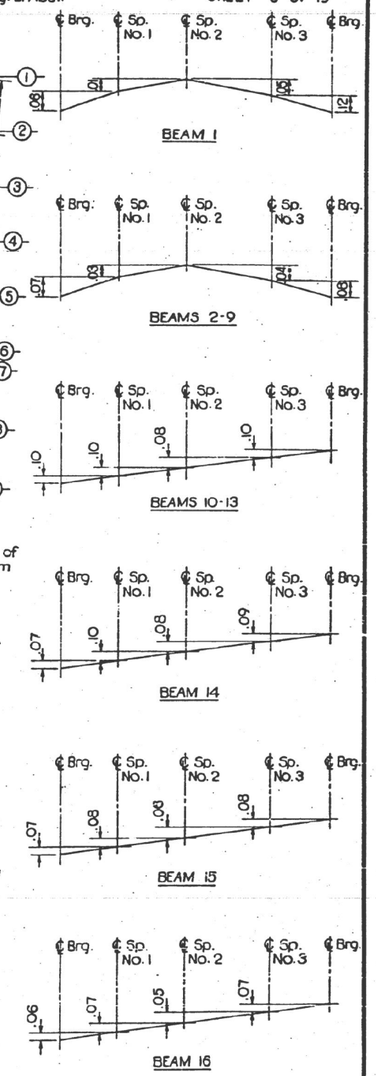

FABRICATION DIAGRAMS

Notes:
All beams 33 WF 130
All elevations shown are given at the top of the top flange of the beams @ ℄ Brg. or ℄ Splice.
Diaphragms D_1 & D_2 to be perpendicular to ℄ Rdwy.
Work this sheet with sheet 7 of 19

STRUCTURAL STEEL
F.A. RT. 196 OVER U.S. RT. 66

F.A. ROUTE 196 SEC. 84-3HB-4-F
SANGAMON COUNTY
STATION 674+00

DESIGNED	REG	
CHECKED	gcc	
DRAWN	D.D.O.	
CHECKED	gcc	

EXAMINED
PASSED
APPROVED
ENGINEER OF BRIDGE AND TRAFFIC STRUCTURES
ENGINEER OF DESIGN
CHIEF HIGHWAY ENGINEER

MODEL: Default
FILE NAME: O:\OPERATIONS\Bridges\Bridgeplans_CAD\72L85 - 6th St pdn\tnplans\sheet.dgn

USER NAME = dudleybm	DESIGNED -	REVISED -	
	DRAWN -	REVISED -	
PLOT SCALE = 100.0000 ' / in.	CHECKED -	REVISED -	
PLOT DATE = 8/13/2020	DATE -	REVISED -	

STATE OF ILLINOIS
DEPARTMENT OF TRANSPORTATION

EXISTING BRIDGE PLANS, SN 084-0076
(FOR INFORMATION ONLY)

SCALE: | SHEET 3 OF 5 SHEETS | STA. | TO STA.

F.A.I. RTE.	SECTION	COUNTY	TOTAL SHEETS	SHEET NO.
72	(84-9-4) BP	SANGAMON	20	6
		CONTRACT NO. 72L85		
		ILLINOIS	FED. AID PROJECT	

STATE OF ILLINOIS
DEPARTMENT OF PUBLIC WORKS & BUILDINGS
DIVISION OF HIGHWAYS

ROUTE NO.	SEC.	COUNTY	TOTAL SHEETS	SHEET NO.
F.A. Rt. 196	84-3HB-4 84-3HF-4	Sangamon	34 25	15 12
FED. ROAD DIST. NO. 7	ILLINOIS	PROJECT		

SHEET 7 OF 19

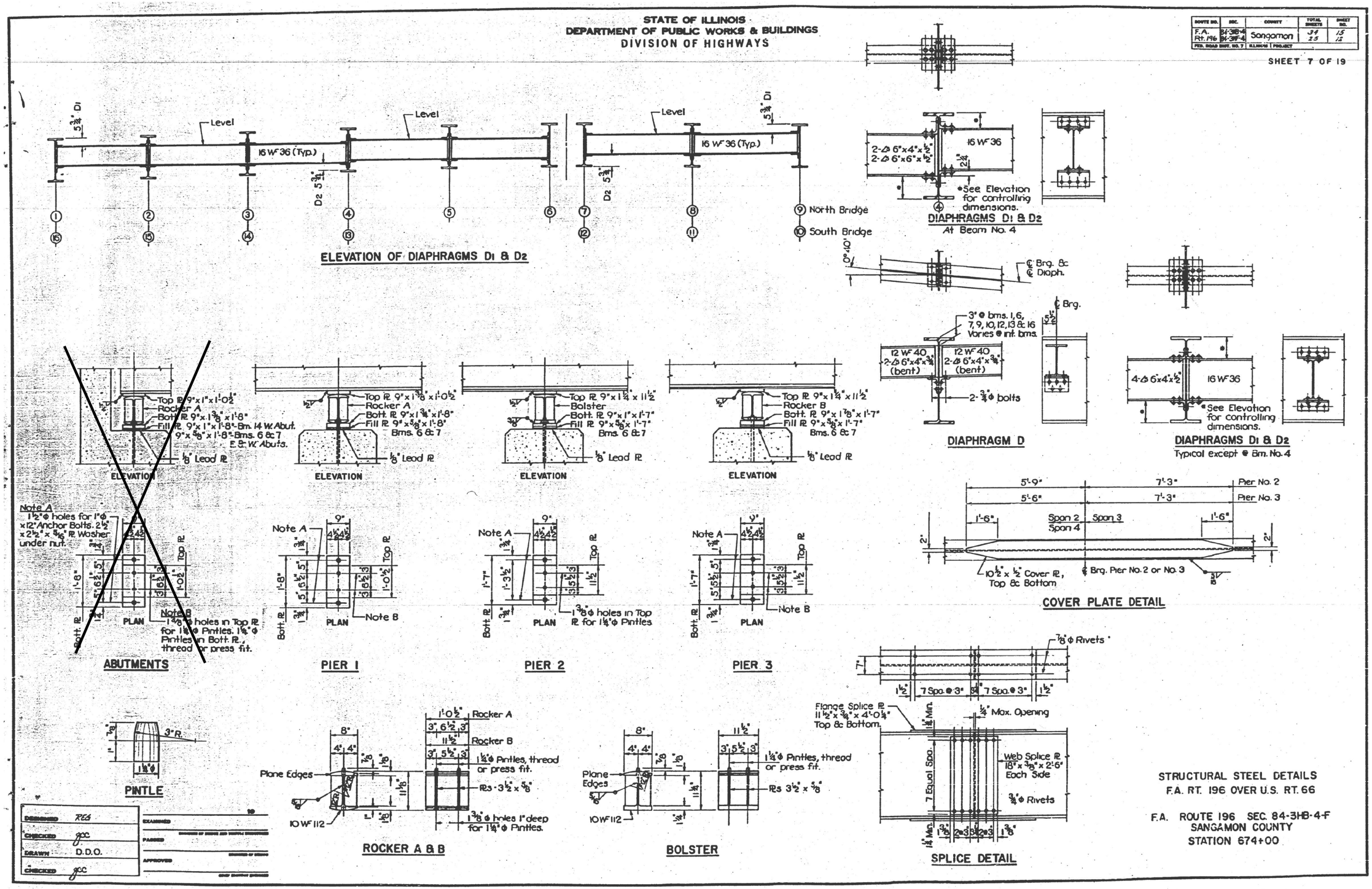

STRUCTURAL STEEL DETAILS
F.A. RT. 196 OVER U.S. RT. 66

F.A. ROUTE 196 SEC. 84-3HB-4-F
SANGAMON COUNTY
STATION 674+00

MODEL: Default
FILE NAME: O:\OPERATIONS\Bridges\Bridgeplans_CAD\72L85 - 6th St pdf\Bridgeplans\sheet.dgn

USER NAME = dudleybm	DESIGNED -	REVISED -	
	DRAWN -	REVISED -	
PLOT SCALE = 100.0000 ' / in.	CHECKED -	REVISED -	
PLOT DATE = 8/13/2020	DATE -	REVISED -	

STATE OF ILLINOIS
DEPARTMENT OF TRANSPORTATION

EXISTING BRIDGE PLANS, SN 084-0076
(FOR INFORMATION ONLY)

SCALE: | SHEET 4 OF 5 SHEETS | STA. TO STA.

F.A.I. RTE.	SECTION	COUNTY	TOTAL SHEETS	SHEET NO.
72	(84-9-4) BP	SANGAMON	20	7
		CONTRACT NO. 72L85		
		ILLINOIS	FED. AID PROJECT	

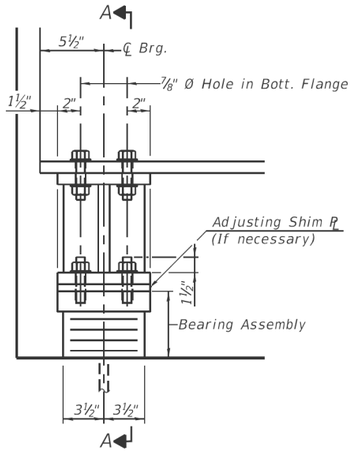

ELEVATION AT ABUT.

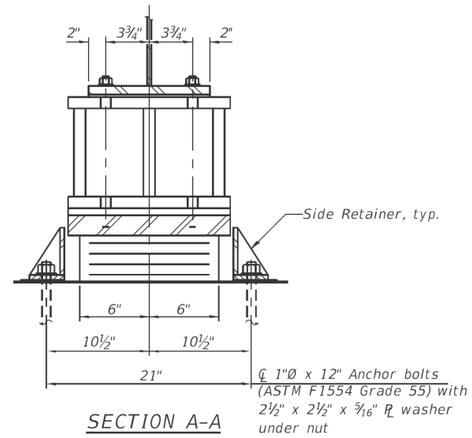

SECTION A-A

TYPE I ELASTOMERIC EXP. BRG.

(At West and East Abutments - 18 required)

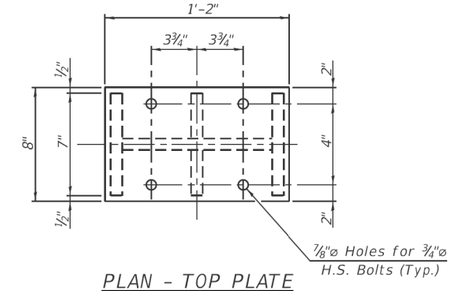

PLAN - TOP PLATE

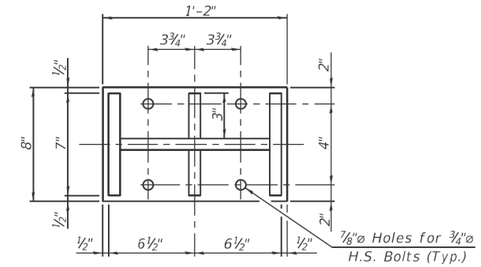

SECTION B-B

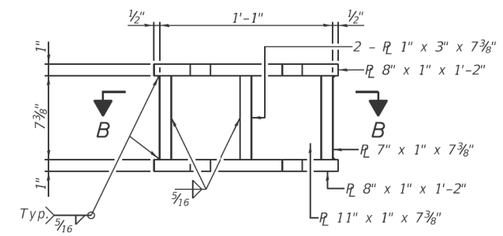

ELEVATION STEEL EXTENSION

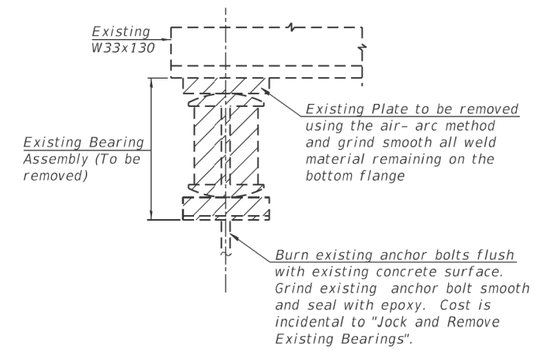

EXISTING BEARING REMOVAL DETAIL

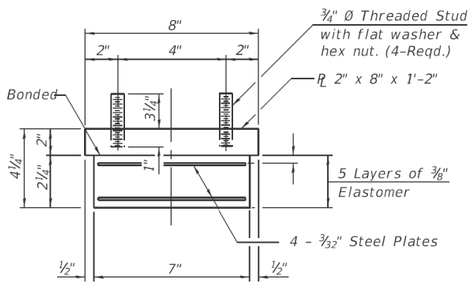

BEARING ASSEMBLY

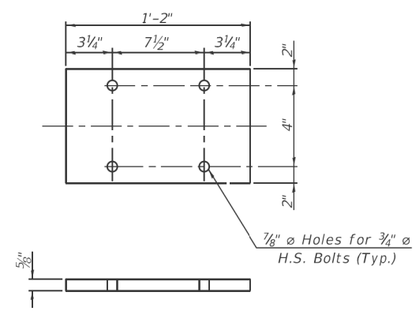

SHIM PLATE DETAIL

(Provide shim plate at beams
6 & 7, both abutments.)

Note:
Shim plates shall not be placed
under Bearing Assembly.

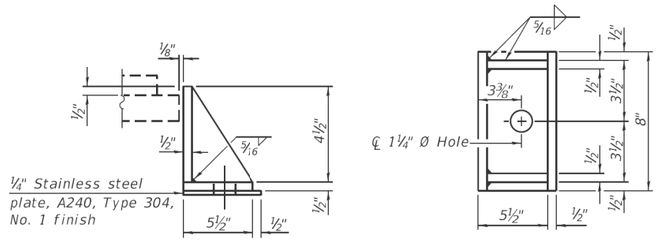

SIDE RETAINER

Equivalent rolled angle with stiffeners
will be allowed in lieu of welded plates.

Anchor bolts shall be ASTM F1554 all-thread (or an Engineer-approved alternate material) of the grade(s) and diameter(s) specified. The corresponding specified grade of AASHTO M314 anchor bolts may be used in lieu of ASTM F1554.

Drilled and set anchor bolts shall be installed according to Article 521.06 of the Standard Specifications.

Side retainers and other steel members required for the bearing assembly shall be included in the cost of Elastomeric Bearing Assembly, Type I.

Diaphragm removal and replacement may be required to facilitate drilling holes. Cost shall be included with Furnishing and Erecting Structural Steel.

New steel extensions, shim plates and connection bolts are included with Furnishing and Erecting Structural Steel.

Prior to ordering any material, the Contractor shall verify in the field all bearing heights.

The structural steel bearing plates for the bearings shall conform to the requirements of AASHTO M270 Grade 36.

INTERIOR GIRDER
REACTION TABLE

	W. ABUT.	E. ABUT.
R_{DL}, kips	18.7	14.8
R_{LL}, kips	37.3	37.7
Imp., kips	11.2	11.3
R (Total) , kips	67.2	63.8

BILL OF MATERIAL

Item	Unit	Total
Elastomeric Bearing Assembly Type I	Each	18
Anchor Bolts, 1"	Each	36
Furnishing and Erecting Structural Steel	Pound	2480

I-2E-1 8-11-2017

Veenstra & Kimm, Inc.
Springfield, IL. Phone: (217)544-8033

USER NAME =	DESIGNED -	REVISED -
	CHECKED -	REVISED -
PLOT SCALE =	DRAWN -	REVISED -
PLOT DATE =	CHECKED -	REVISED -

STATE OF ILLINOIS
DEPARTMENT OF TRANSPORTATION

BEARING DETAILS
STRUCTURE NO. 084-0076
SHEET NO. 11 OF 17 SHEETS

F.A.I. RTE.	SECTION	COUNTY	TOTAL SHEETS	SHEET NO.
•	(110)RS-2, (84-9)RS-7, BR	SANGAMON	152	82
		CONTRACT NO. 72J94		
		ILLINOIS FED. AID PROJECT		

• FAI 72, FAP 666, FAI 72 4 / I-72, I-55 BUS

MODEL: Default
FILE NAME: G:\OPERATIONS\Bridges\Bridgeplans CAD\72L85 - 6th St palmyra\sheet.dgn

USER NAME = dudleybm	DESIGNED -	REVISED -
	DRAWN -	REVISED -
PLOT SCALE = 100.0000 ' / in.	CHECKED -	REVISED -
PLOT DATE = 8/13/2020	DATE -	REVISED -

STATE OF ILLINOIS
DEPARTMENT OF TRANSPORTATION

EXISTING BRIDGE PLANS, SN 084-0076
(FOR INFORMATION ONLY)

SCALE: SHEET 3 OF 5 SHEETS STA. TO STA.

F.A.I. RTE.	SECTION	COUNTY	TOTAL SHEETS	SHEET NO.
72	(84-9-4) BP	SANGAMON	20	8
		CONTRACT NO. 72L85		
		ILLINOIS FED. AID PROJECT		

Bench Mark: Chiseled "□" East side of overhead sign foundation centerline median 6th Street, North of SN 084-0076, NAVD 88 Elev. 601.90

Existing Structure: Structure No. 084-0077 was orginally built in 1963 under Section 84-3(HB,HF)-4) in Sangamon County. The structure was widened in 1973 under Section 84-9(4,4HB,2Y) and repaired in 1989. The expansion joints were replaced in 1991 under Section (84-9-4HB-2)I and HMA overlay was added in 1996. Beams were straightened and replaced in 2003 under Section (84-3HB-4)I. In 2008, the north parapet was replaced and a new HMA surface was constructed under Section D6 Interstate RS, BR, M CAB 2008. The existing bridge is a four span steel wide flange beam superstructure with poured concrete deck. The substructure consists of spill-through abutments on steel piles and hammerhead piers on timber piles. The back to back abutment length is 192'-8" and the out to out bridge width varies between 50'-8¾" to 54'-7". The existing concrete deck will be removed and replaced.
Construction will be completed using Stage Construction.

No Salvage

INDEX OF SHEETS

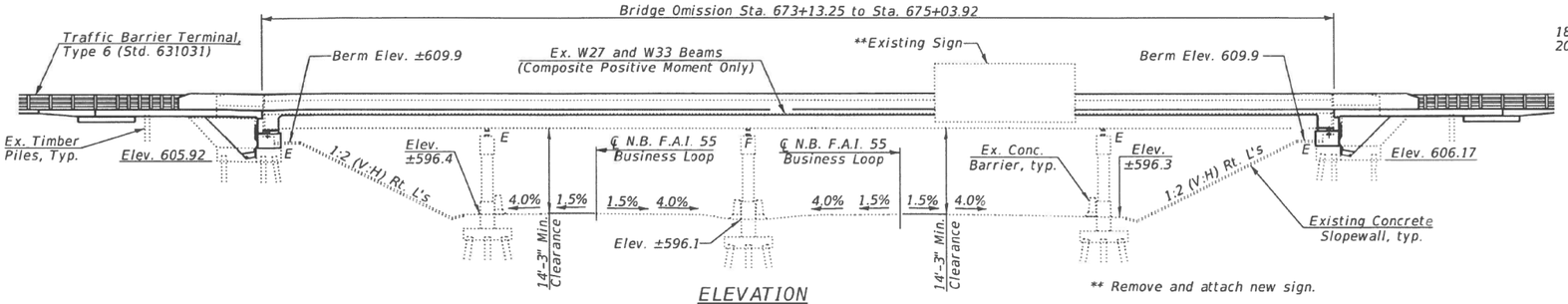

ELEVATION

** Remove and attach new sign.

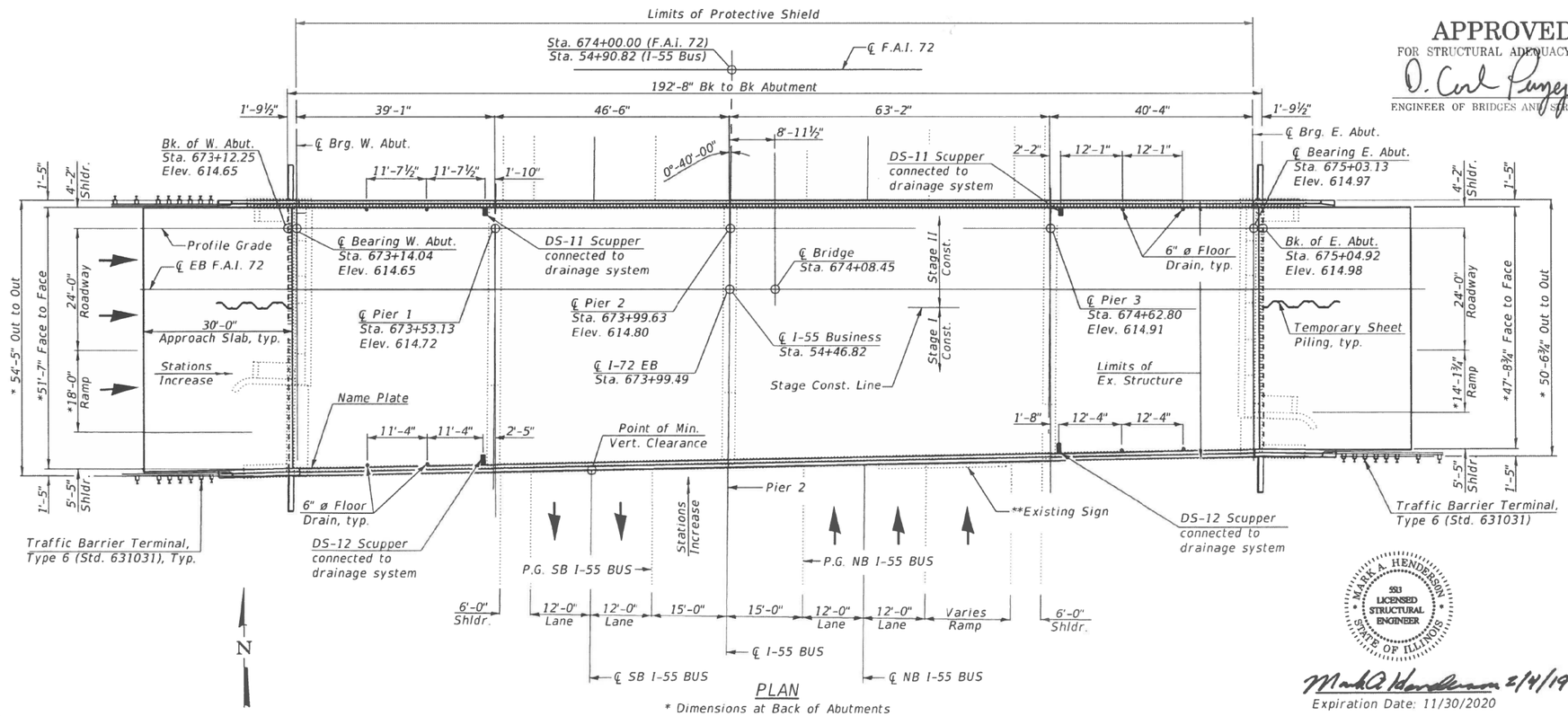

PLAN

* Dimensions at Back of Abutments

APPROVED
FOR STRUCTURAL ADEQUACY ONLY
D. Carl Punyer, P.E.
ENGINEER OF BRIDGES AND STRUCTURES

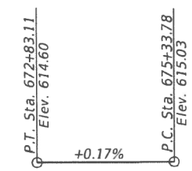

PROFILE GRADE
F.A.I 72 (I-72) EB
(At North Edge of Pavement)

The profile grade shows the final elevations after grinding

Up to ¼ inch will be ground off the bridge deck and approach slabs.

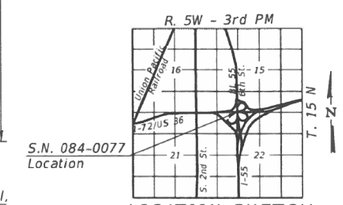

S.N. 084-0077 Location

LOCATION SKETCH

MARK A. HENDERSON
5513
LICENSED STRUCTURAL ENGINEER
STATE OF ILLINOIS

Mark A. Henderson 2/4/19
Expiration Date: 11/30/2020

GENERAL PLAN & ELEVATION
EB I-72 (F.A.I. 72) OVER
6th STREET/I-55 BUS
SEC. (110)RS-2, (84-9)RS-7, BR
SANGAMON COUNTY
STATION 674+08.45
STRUCTURE NO. 084-0077

Veenstra & Kimm, Inc. Springfield, IL. Phone: (217)544-8033	USER NAME =	DESIGNED -	REVISED -
		CHECKED -	REVISED -
	PLOT SCALE =	DRAWN -	REVISED -
	PLOT DATE =	CHECKED -	REVISED -

STATE OF ILLINOIS
DEPARTMENT OF TRANSPORTATION

GENERAL PLAN AND ELEVATION
STRUCTURE NO. 084-0077

SHEET NO. 1 OF 38 SHEETS

F.A.I. RTE.	SECTION	COUNTY	TOTAL SHEETS	SHEET NO.
*	(110)RS-2, (84-9)RS-7, BR	SANGAMON	152	89
		CONTRACT NO. 72J94		
		ILLINOIS FED. AID PROJECT		

* FAI 72, FAP 666, FAI 72 4 / I-72, I-55 BUS

	USER NAME = dudleybm	DESIGNED -	REVISED -
		DRAWN -	REVISED -
	PLOT SCALE = 100.0000 ' / in.	CHECKED -	REVISED -
	PLOT DATE = 8/13/2020	DATE -	REVISED -

STATE OF ILLINOIS
DEPARTMENT OF TRANSPORTATION

EXISTING BRIDGE PLANS, SN 084-0077
(FOR INFORMATION ONLY)

SCALE: SHEET 1 OF 8 SHEETS STA. TO STA.

F.A.I. RTE.	SECTION	COUNTY	TOTAL SHEETS	SHEET NO.
72	(84-9-4) BP	SANGAMON	20	9
		CONTRACT NO. 72L85		
		ILLINOIS FED. AID PROJECT		

MODEL: Default
FILE NAME: G:\OPERATIONS\Bridges\Bridgeplans_CAD\72L85 - 6th St paintplansheet.dgn

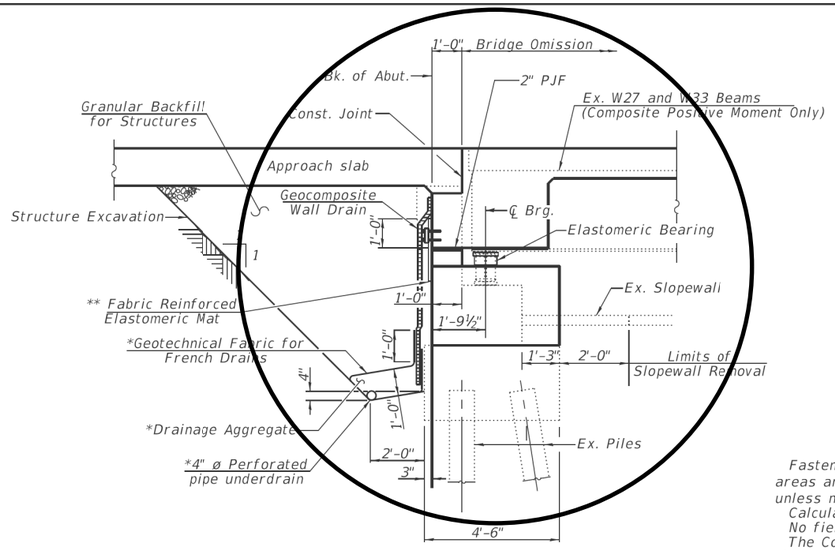

SECTION THRU SEMI-INTEGRAL ABUTMENT

(Horiz. dim. @ Rt. angles)

* Included in the cost of Pipe Underdrains for Structures (See Special Provisions)

** Included in the cost of the Concrete Superstructure

Note:
All drainage system components shall extend to 2'-0" from the end of each wingwall except an outlet pipe shall extend until intersecting with the side slopes. The 4" ø Perforated Pipe Drain shall be placed under the exisitng wingwalls that are to remain in place. The pipes shall drain into concrete headwalls. (See Article 601.05 of the Standard Specifications and Highway Standard 601101).

STATION 674+08.45
BUILT 20__ BY
STATE OF ILLINOIS
F.A.I. RT. 72
SEC. (110)RS-2, (84-9)RS-7, BR
LOADING HS20-44
STR. NO. 084-0077

NAME PLATE

See Std. 515001

SCOPE OF WORK

1 - Set-up Stage I for construction and place traffic in Stage I.
2 - Remove upper portion of existing wingwalls for Bridge approach slab for Stage I.
3 - Remove existing concrete deck and parapets for Stage I.
4 - Reconfigure existing abutments and wingwalls to semi-integral abutment configuration for Stage I.
5 - Construct new concrete deck. Make new deck composite in positive moment regions for Stage I.
6 - Retrofit all welded cover plates on the top flange with bolted cover plates.
7 - Set-up Stage II for construction and switch traffic over to Stage II.
8 - Repeat above steps for Stage II.
9 - Repair existing substructure units.
10 - Clean and paint existing structural steel under separate "Paint Only" contract.

GENERAL NOTES

Fasteners shall be ASTM A325 Type 1, mechanically galvanized bolts (in painted areas and ASTM A325 Type 3 in unpainted areas). Bolts ⅞ in ø, holes 15/16 in. ø unless noted otherwise.

Calculated weight of Structural Steel = 7790 pounds (M270 Grade 50)

No field welding is permitted except as specified in the contract documents.

The Contractor shall test the existing welds by non-destructive methods within 2 ft. of the end of the existing cover plates for cracks after removal of the existing concrete deck. Dye penetrant (PT), magnetic particle (MT), or other approved testing method shall be performed by qualified personnel approved by the Engineer. If cracks are found, report them to the Bureau of Bridges and Structures for disposition. The cost of testing is included in Removal of Existing Concrete Deck. The cost of crack repair, if necessary, will be paid for according to Article 109.04 of the Standard Specifications.

Reinforcement bars designated (E) shall be epoxy coated.

Prior to pouring the new concrete deck, all heavy or loose rust, loose mill scale, and other loose or potentially detrimental foreign material shall be removed from the surfaces in contact with concrete. Tightly adhered paint may remain unless otherwise noted. Removal shall be accomplished by methods that will not damage the steel and the cost will be included in the pay item covering removal of the existing concrete. As directed by the Engineer, existing construction accessories welded to the top flange of beams and girders shall be removed. The weld areas shall be ground flush and inspected for cracks using magnetic particle testing (MT) or dye penetrant testing (PT) by qualified personnel approved by the Engineer. Any cracks that cannot be removed by grinding ¼ inch deep shall be identified and reported to the Bureau of Bridges and Structures for further disposition. The cost of removing welded accessories, grinding and inspecting weld areas and grinding cracks will be paid for according to Article 109.04 of the Standard Specifications.

If the Contractor elects to use cantilever forming brackets on the exterior beams or girders, the brackets shall be placed at the same locations as required for the hardwood blocks in Article 503.06(b) of the Standard Specifications. If additional cantilever forming brackets are required, hardwood blocking shall be wedged between the exterior and first interior beam at each of these additional bracket locations.

Plan dimensions and details relative to existing plans are subject to nominal construction variations. The Contractor shall field verify existing dimensions and details affecting new construction and make necessary approved adjustments prior to construction or ordering materials. Such variations shall not be cause for additional compensation for a change in scope of the work, however, the Contractor will be paid for the quantity actually furnished at the unit price bid for the work.

Bearing seat surfaces shall be constructed or adjusted to the designated elevations within a tolerance of ⅛ in. (0.01 ft.). Adjustment shall be made either by grinding the surface or by shimming the bearings.

Cleaning and field painting of structural steel shall be done under a separate painting contract.

The existing structural steel coating contains lead. The Contractor shall take appropriate precautions to deal with the presence of lead on this project.

TOTAL BILL OF MATERIAL

ITEM	UNIT	SUPER	SUB	TOTAL
Protective Coat	Sq. Yd.	1610		1610
Concrete Removal	Cu. Yd.		45.7	45.7
Slope Wall Removal	Sq. Yd.		41	41
Removal of Existing Concrete Deck No. 1	Each	1		1
Protective Shield	Sq. Yd.		1141	1141
Structure Excavation	Cu. Yd.		130	130
Floor Drains	Each	8		8
Concrete Structures	Cu. Yd.	47.9	70.6	118.5
Concrete Superstructure	Cu. Yd.	354.2		354.2
Concrete Superstructure (Approach Slab)	Cu. Yd.	144.9		144.9
Furnishing and Erecting Structural Steel	Pound	7790		7790
Stud Shear Connectors	Each	4494		4494
Reinforcement Bars, Epoxy Coated	Pound	144600	7820	152420
Bar Splicers	Each	889	24	913
Slope Wall 4"	Sq. Yd.		25	25
Name Plates	Each	1		1
Elastomeric Bearing Assembly, Type 1	Each	20		20
Anchor Bolts, 1"	Each		40	40
Temporary Sheet Piling	Sq. Ft.		352	352
Granular Backfill For Structures	Cu. Yd.		166	166
Concrete Sealer	Sq. Ft.		589	589
Geocomposite Wall Drain	Sq. Yd.		81	81
Controlled Low-Strength Material	Cu. Yd.		6.1	6.1
Overhead Sign Structure - Bridge Mounted	Foot	14		14
Remove Overhead Sign Structure - Bridge Mounted	Each	1		1
Bridge Deck Grooving (Longitudinal)	Sq. Yd.	1125		1125
Jack and Remove Existing Bearings	Each	20		20
Approach Slab Removal	Sq. Yd.	414		414
Structural Repair of Concrete (Depth Equal to or Less Than 5 Inches)	Sq. Ft.		31	31
Drainage Scupper, DS-11	Each	2		2
Drainage Scupper, DS-12	Each	2		2
Drainage System	L Sum	1		1
Diamond Grinding (Bridge Section)	Sq. Yd.	1280		1280
Pipe Underdrains for Structures 4"	Foot		138	138
Slope Wall Repair	Sq. Yd.		6	6

LOADING HS20-44

No allowance for future wearing surface.

SEISMIC DATA

Seismic Performance Category (SPC) = A
Acceleration Coefficient (A) = 0.048
Site Coefficient (S) = 1.5

DESIGN SPECIFICATIONS

2002 AASHTO Standard Specifications

DESIGN STRESSES

FIELD UNITS (Exist. Construction)

f'c = 3,500 psi
fy = 33,000 psi (Structural Steel)-Original
fy = 36,000 psi (Structural Steel)-1973 Plans
fy = 40,000 psi (Reinforcement)-Original
fy = 40,000 psi (Reinforcement)-1973 Plans

FIELD UNITS (New Construction)

f'c = 3,500 psi (Substructure)
f'c = 4,000 psi (Superstructure)
fy = 60,000 psi (Reinforcement)
fy = 36,000 psi (Bearing/Side Retainers)

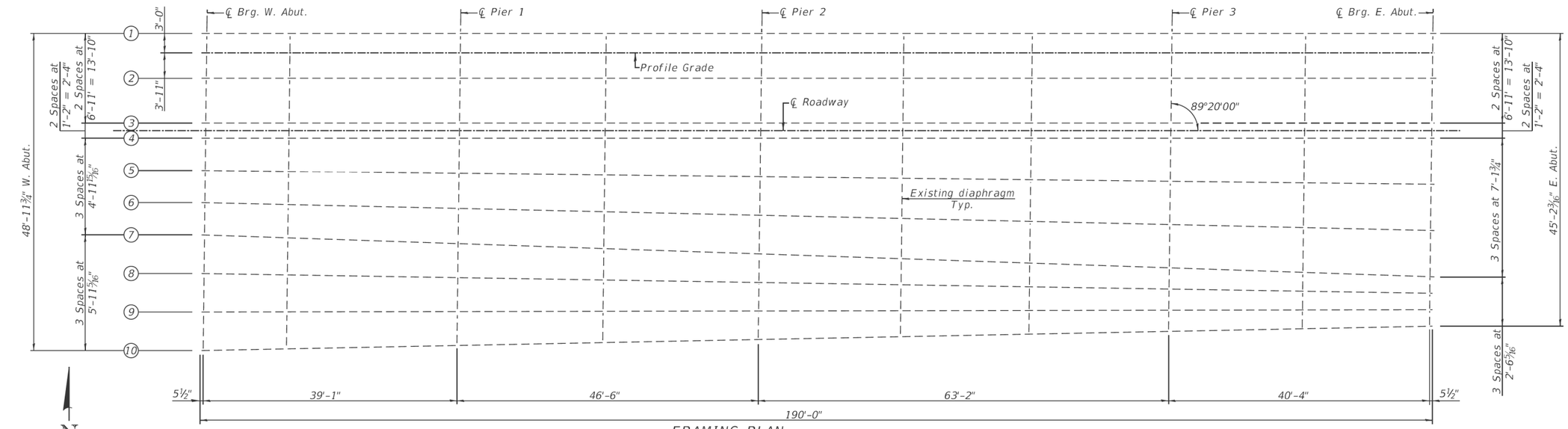

FRAMING PLAN

Existing beams 1 Thru 7 are W33x130 & beams 8 Thru 10 are W27x114
Note: "CVN" denotes Charpy-V-Notch impact energy requirements, zone 2.

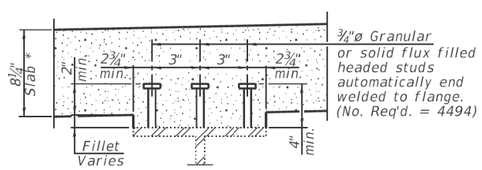

SECTION B-B

* Prior to grinding

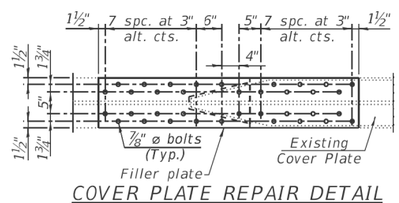

COVER PLATE REPAIR DETAIL

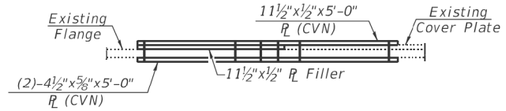

COVER PLATE REPAIR DETAIL

(Beams 1 thru 7)

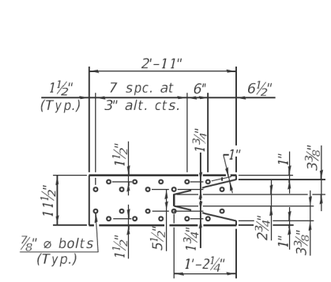

FILLER PLATE DETAIL

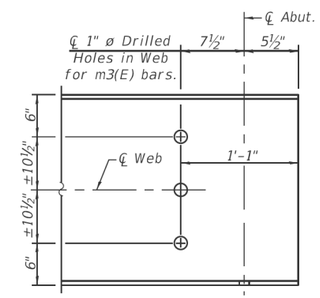

TYP. END OF BEAM ELEVATION - W33x130

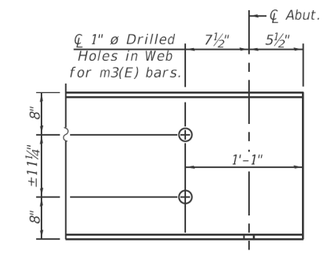

TYP. END OF BEAM ELEVATION - W27x114

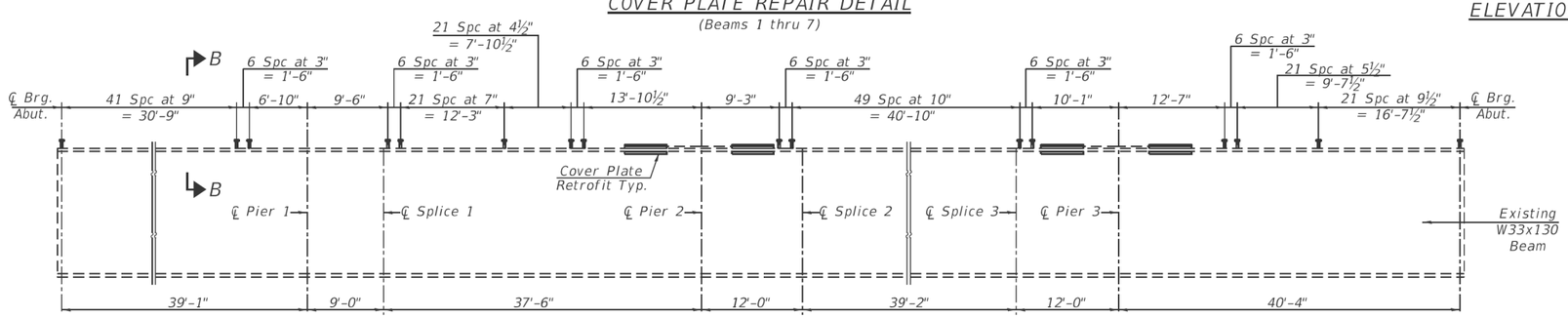

ELEVATION

(Beams 1 thru 7)

Notes:
All structural steel for coverplate retrofit to conform to the requirements of AASHTO M270, Grade 50.

BILL OF MATERIAL

Item	Unit	Quantity
Furnishing and Erecting Structural Steel	Pound	7790
Shear Stud Connectors	Each	4494

Veenstra & Kimm, Inc.
Springfield, IL. Phone: (217)544-8033

USER NAME =	DESIGNED -	REVISED -	
	CHECKED -	REVISED -	
PLOT SCALE =	DRAWN -	REVISED -	
PLOT DATE =	CHECKED -	REVISED -	

STATE OF ILLINOIS
DEPARTMENT OF TRANSPORTATION

STRUCTURAL STEEL
STRUCTURE NO. 084-0077

SHEET NO. 22 OF 38 SHEETS

F.A.I. RTE.	SECTION	COUNTY	TOTAL SHEETS	SHEET NO.
*	(110)RS-2, (84-9)RS-7, BR	SANGAMON	152	110
		CONTRACT NO. 72J94		
	ILLINOIS FED. AID PROJECT			

* FAI 72, FAP 666, FAI 72 4 / I-72, I-55 BUS

USER NAME = dudleybm	DESIGNED -	REVISED -	
	DRAWN -	REVISED -	
PLOT SCALE = 100.0000 ' / in.	CHECKED -	REVISED -	
PLOT DATE = 8/13/2020	DATE -	REVISED -	

STATE OF ILLINOIS
DEPARTMENT OF TRANSPORTATION

EXISTING BRIDGE PLANS, SN 084-0077
(FOR INFORMATION ONLY)

SCALE: SHEET 3 OF 8 SHEETS STA. TO STA.

F.A.I. RTE.	SECTION	COUNTY	TOTAL SHEETS	SHEET NO.
72	(84-9-4) BP	SANGAMON	20	11
		CONTRACT NO. 72L85		
	ILLINOIS FED. AID PROJECT			

MODEL: Default
FILE NAME: G:\OPERATIONS\Bridges\Bridgeplans_CAD\72L85 - 6th St palmtopbansheet.dgn

STATE OF ILLINOIS
DEPARTMENT OF PUBLIC WORKS & BUILDINGS
DIVISION OF HIGHWAYS

ROUTE NO.	SEC.	COUNTY	TOTAL SHEETS	SHEET NO.
F.A.	84-3HB-4	Sangamon	34	14
Rt. 196	84-2B-4		25	11
FED. ROAD DIST. NO. 7	ILLINOIS	PROJECT		

SHEET 6 OF 19

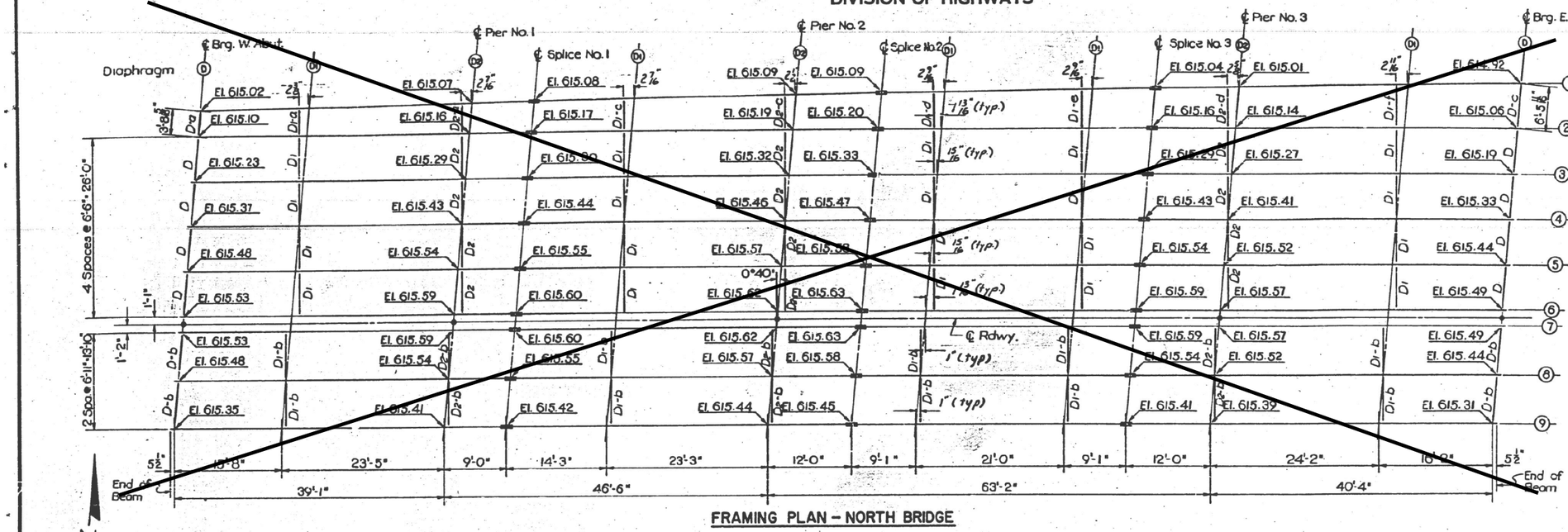

FRAMING PLAN – NORTH BRIDGE

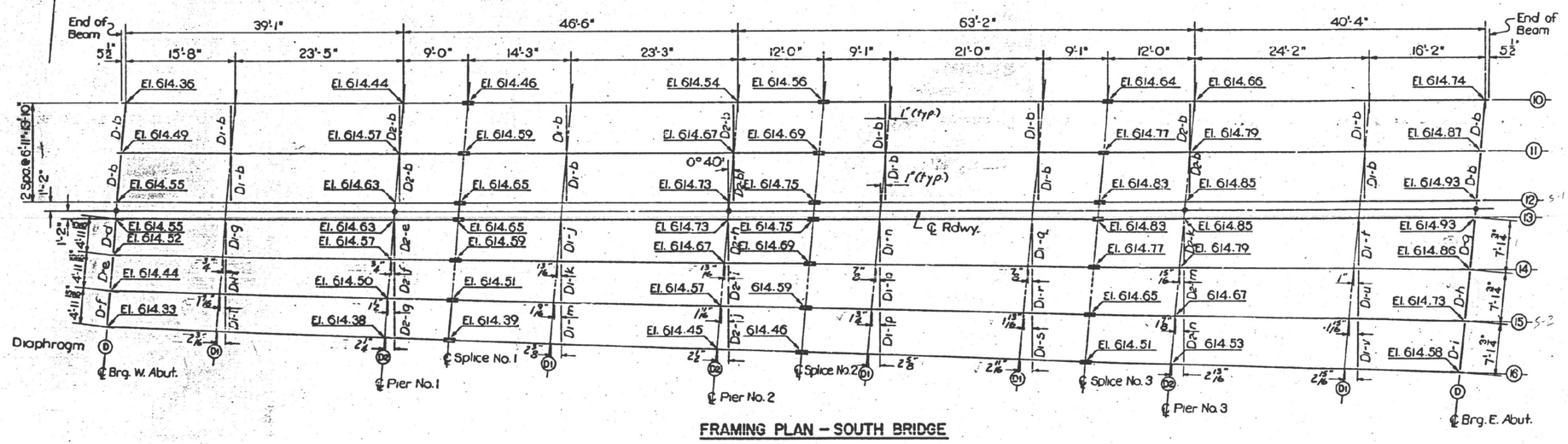

FRAMING PLAN – SOUTH BRIDGE

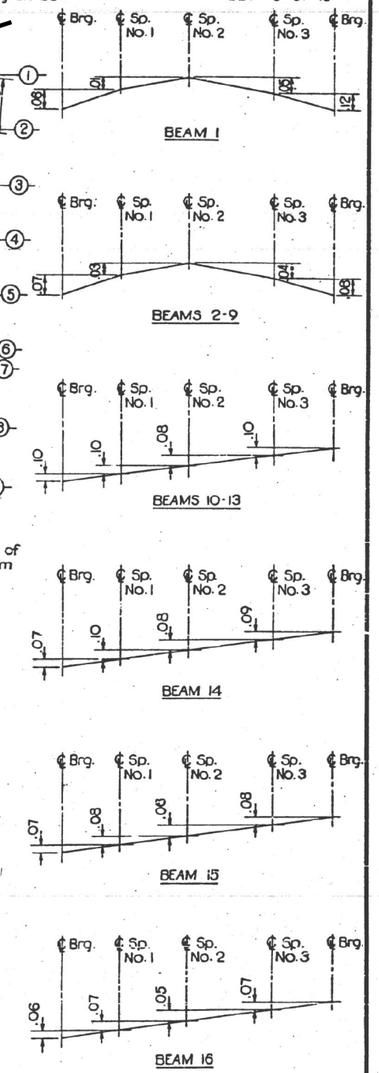

FABRICATION DIAGRAMS

Notes:
All beams 33 W 130
All elevations shown are given at the top of the top flange of the beams @ ℄ Brg. or ℄ Splice.
Diaphragms D_1 & D_2 to be perpendicular to ℄ Rdwy.
Work this sheet with sheet 7 of 19

STRUCTURAL STEEL
F.A. RT. 196 OVER U.S. RT. 66

F.A. ROUTE 196 SEC. 84-3HB-4-F
SANGAMON COUNTY
STATION 674+00

DESIGNED	REG	
CHECKED	gpc	
DRAWN	D.D.O.	
CHECKED	gpc	

EXAMINED — 19
ENGINEER OF BRIDGE AND TRAFFIC STRUCTURES
PASSED
ENGINEER OF DESIGN
APPROVED
CHIEF ENGINEER ENGINEER

USER NAME = dudleybm	DESIGNED -	REVISED -	STATE OF ILLINOIS DEPARTMENT OF TRANSPORTATION
	DRAWN -	REVISED -	
PLOT SCALE = 100.0000 ' / in.	CHECKED -	REVISED -	
PLOT DATE = 8/13/2020	DATE -	REVISED -	

EXISTING BRIDGE PLANS, SN 084-0077
(FOR INFORMATION ONLY)

SCALE: | SHEET 4 OF 8 SHEETS | STA. | TO STA.

F.A.I. RTE.	SECTION	COUNTY	TOTAL SHEETS	SHEET NO.
72	(84-9-4) BP	SANGAMON	20	12
		CONTRACT NO. 72L85		
		ILLINOIS	FED. AID PROJECT	

MODEL: Default
FILE NAME: C:\OPERATIONS\Bridges\Bridgeplans_CAD\72L85 - 6th St pain\plansheet.dgn

ROUTE NO.	SECTION	COUNTY	TOTAL SHEETS	SHEET NO.
S.B.I. F.A. 408	84-9-(4, 4HB-2Y)	Sangamon	109	40
FED. ROAD DIST. NO. 7	ILLINOIS	FED. AID PROJECT		

SHEET NO. 6
13 SHEETS

STATE OF ILLINOIS
DEPARTMENT OF TRANSPORTATION

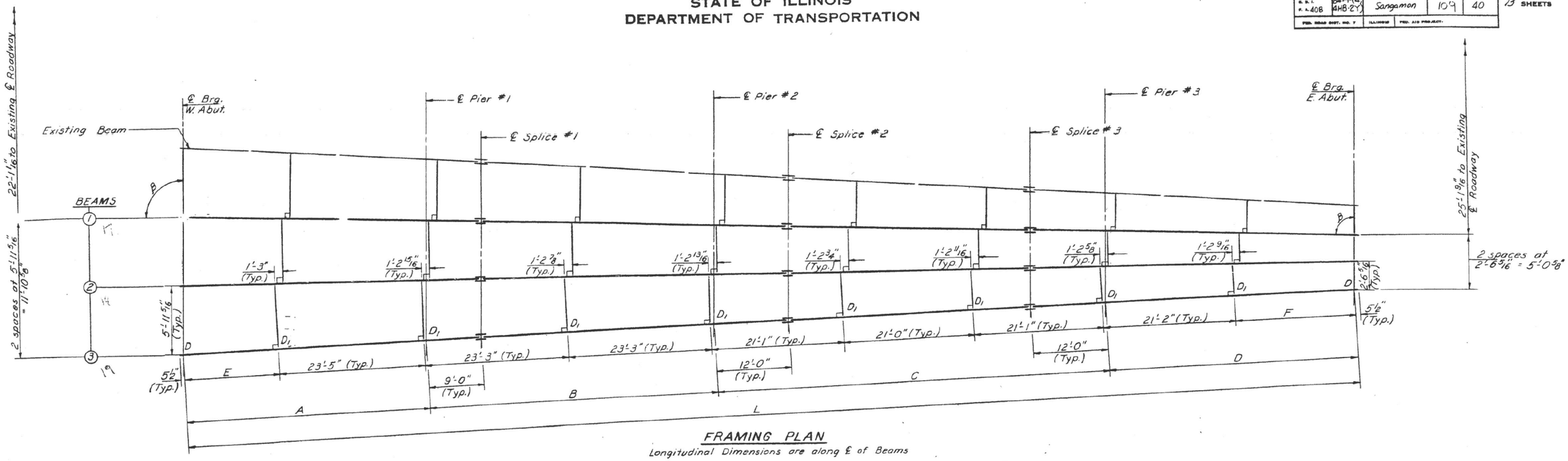

FRAMING PLAN

Longitudinal Dimensions are along ℄ of Beams

For Angle β see Sheet #7.

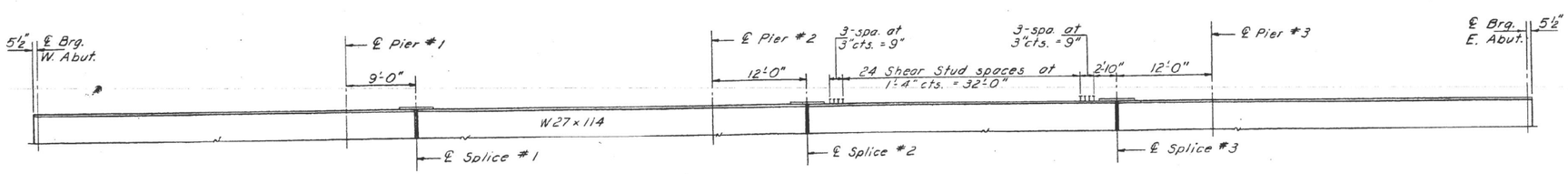

ELEVATION

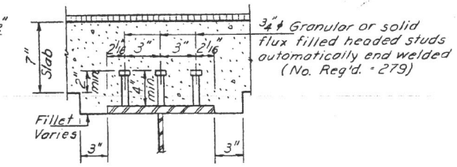

SHEAR STUDS

BEAM DIMENSIONS

Dim. / Beams	L	A	B	C	D	E	F
1	189'-0 3/8"	39'-1"	46'-5 15/16"	63'-1 13/16"	40'-4"	17'-2"	17'-7 3/8"
2	189'-1 1/16"	39'-1"	46'-6"	63'-2 1/16"	40'-4"	16'-0"	18'-10 1/16"
3	189'-2"	39'-1 3/16"	46'-6 1/4"	63'-2 5/16"	40'-4 1/4"	14'-11 3/16"	19'-11 11/16"

DESIGNED Suresh T. Desai
CHECKED Hwa-Yuan Lee

EXAMINED June 24, 1973
ENGINEER OF BRIDGE AND TRAFFIC STRUCTURES
PASSED W. E. Baumann

STRUCTURAL STEEL
SOUTH BRIDGE
F.A. RT. 408 SEC. 84-9-(4,4HB-2.
SANGAMON COUNTY
STATION 573+99.49

USER NAME = dudleybm	DESIGNED -	REVISED -	
	DRAWN -	REVISED -	
PLOT SCALE = 100.0000 ' / in.	CHECKED -	REVISED -	
PLOT DATE = 8/13/2020	DATE -	REVISED -	

STATE OF ILLINOIS
DEPARTMENT OF TRANSPORTATION

EXISTING BRIDGE PLANS, SN 084-0077
(FOR INFORMATION ONLY)

SCALE: | SHEET 5 OF 8 SHEETS | STA. | TO STA.

F.A.I. RTE.	SECTION	COUNTY	TOTAL SHEETS	SHEET NO.
72	(84-9-4) BP	SANGAMON	20	13
		CONTRACT NO. 72L85		
		ILLINOIS	FED. AID PROJECT	

MODEL: Default
FILE NAME: G:\OPERATIONS\Bridges\BridgePlans_CAD\72L85 - 6th St paintplans\sheet.dgn

ROUTE NO.	SECTION	COUNTY	TOTAL SHEETS	SHEET NO.	SHEET NO. 7
S.B.I. F.A. 408	84-9-(4 4HB-2X)	Sangamon	1-7	41	13 SHEETS
FED. ROAD DIST. NO. 7	ILLINOIS	FED. AID PROJECT-			

STATE OF ILLINOIS
DEPARTMENT OF TRANSPORTATION

TOP OF BEAM ELEVATIONS

Loc. / Beams	℄ Brg. E. Abut.	℄ Brg. Pier 1	℄ Splice #1	℄ Brg. Pier 2	℄ Splice #2	℄ Splice #3	℄ Brg. Pier 3	℄ Brg. E. Abut.
1	614.06	614.08	614.09	614.16	614.18	614.26	614.30	614.44
2	613.90	613.94	613.95	614.04	614.07	614.18	614.23	614.39
3	613.74	613.80	613.81	613.92	613.96	614.10	614.15	614.34

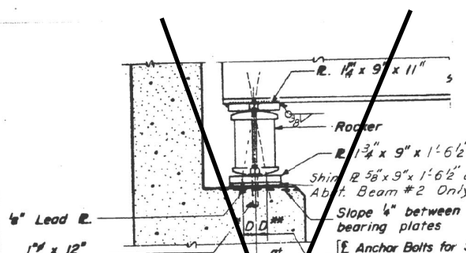

SECTION AT ABUTMENTS

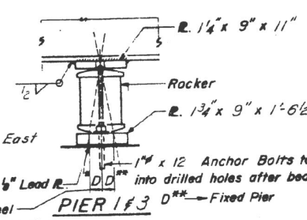

PIER 1 & 3

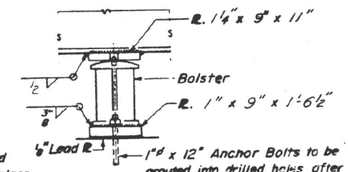

PIER 2

*D = ⅛"/100 ft. of exp. for every 15° below the normal temp. of 50°F.
D** = ⅛"/100 ft. of exp. for every 15° above the normal temp. of 50°F.

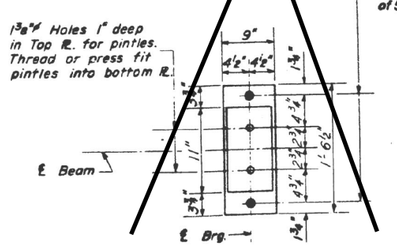

PLAN

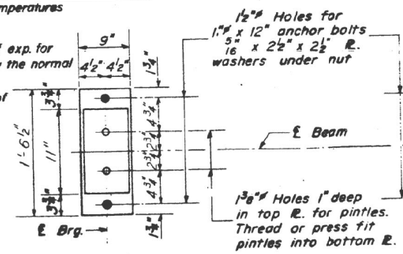

PLAN

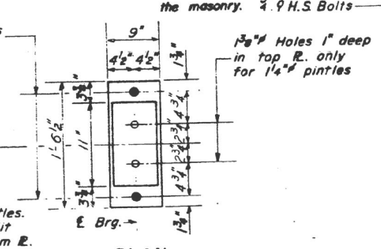

PLAN

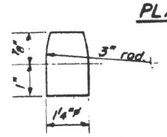

DETAIL OF PINTLE

ANGLE B

88°-42'-33" Existing Beam
89°-44'-37" Beam #1
90°-46'-41" Beam #2
91°-48'-45" Beam #3

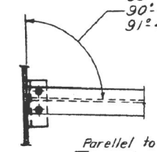

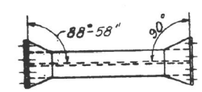

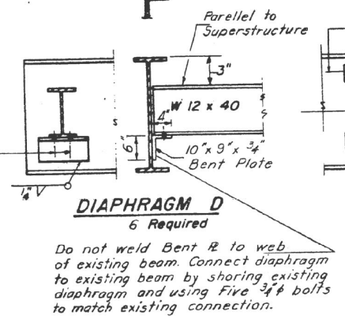

DIAPHRAGM D
6 Required

Do not weld Bent PL to web of existing beam. Connect diaphragm to existing beam by shoring existing diaphragm and using Five 3/4"ϕ bolts to match existing connection.

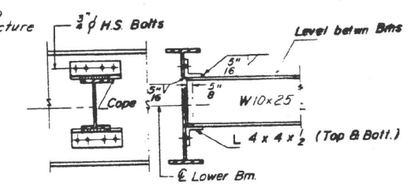

DIAPHRAGM D1
24 Required

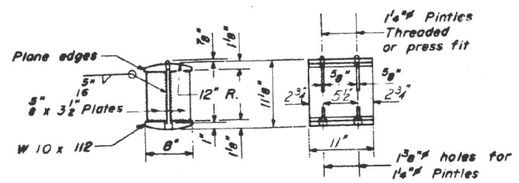

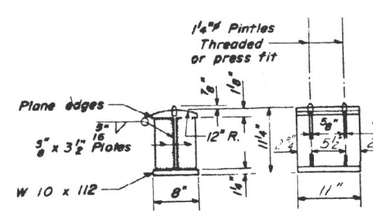

DETAIL OF BOLSTER

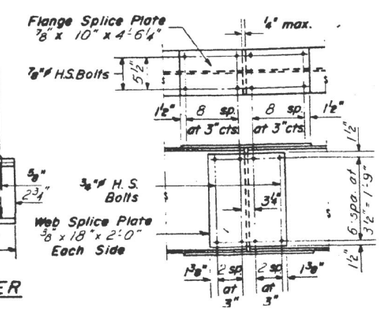

STRUCTURAL STEEL
SOUTH BRIDGE
F.A. RT. 408 SEC. 84-9-(4,4HB)
SANGAMON COUNTY
STATION 673+99.49

DESIGNED Suresh T. Desai
CHECKED
P.G. Barnett R.P.S.
DRAWN W.A. Sausaman Jr.
EXAMINED
PASSED
July 24 1973
ENGINEER OF BRIDGES AND TRAFFIC STRUCTURES
ENGINEER OF DESIGN

MODEL: Default
FILE NAME: C:\OPERATIONS\Bridges\Bridgeplans_CAD\72L85 - 6th St pplntsplanshsheet.dgn

USER NAME = dudleybm	DESIGNED -	REVISED -
	DRAWN -	REVISED -
PLOT SCALE = 100.0000 ' / in.	CHECKED -	REVISED -
PLOT DATE = 8/13/2020	DATE -	REVISED -

STATE OF ILLINOIS
DEPARTMENT OF TRANSPORTATION

EXISTING BRIDGE PLANS, SN 084-0077
(FOR INFORMATION ONLY)

SCALE: SHEET 6 OF 8 SHEETS STA. TO STA.

F.A.I. RTE.	SECTION	COUNTY	TOTAL SHEETS	SHEET NO.
72	(84-9-4) BP	SANGAMON	20	14
		CONTRACT NO. 72L85		
		ILLINOIS	FED. AID PROJECT	

STATE OF ILLINOIS
DEPARTMENT OF PUBLIC WORKS & BUILDINGS
DIVISION OF HIGHWAYS

ROUTE NO.	SEC.	COUNTY	TOTAL SHEETS	SHEET NO.
F.A. Rt. 196	84-3HB-4 84-3HF-4	Sangamon	19 25	15 12
FED. ROAD DIST. NO. 7	ILLINOIS	PROJECT		

SHEET 7 OF 19

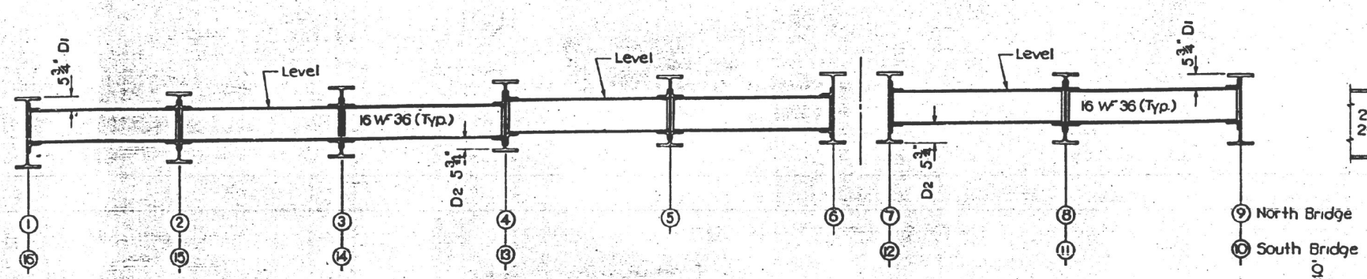

ELEVATION OF DIAPHRAGMS D1 & D2

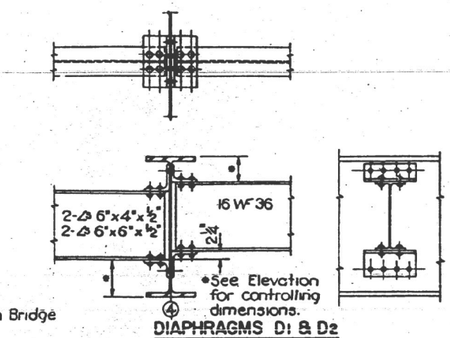

DIAPHRAGMS D1 & D2
At Beam No. 4

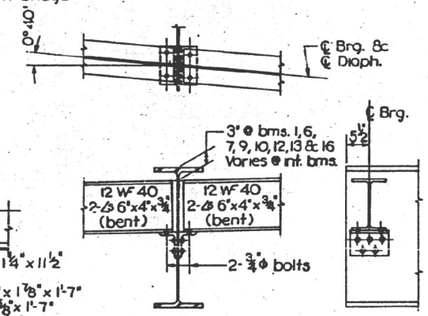

DIAPHRAGM D

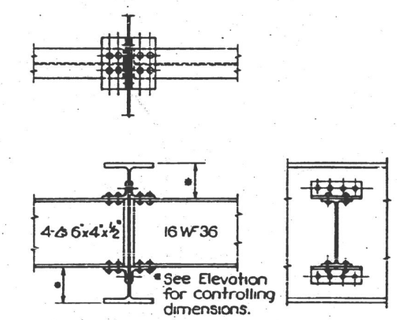

DIAPHRAGMS D1 & D2
Typical except @ Bm. No. 4

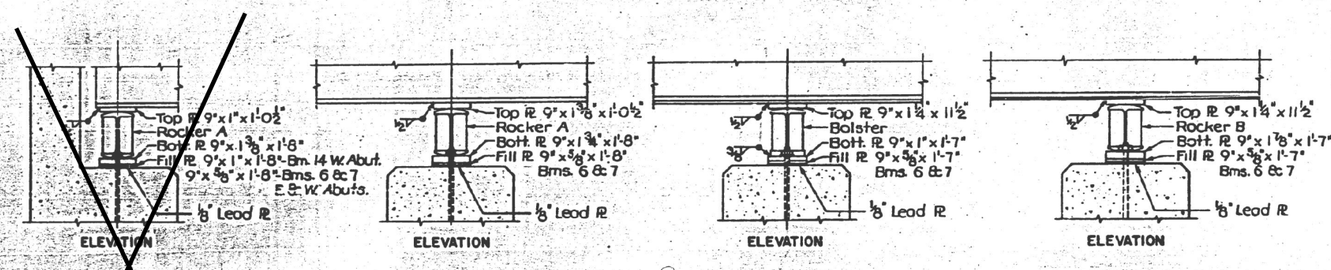

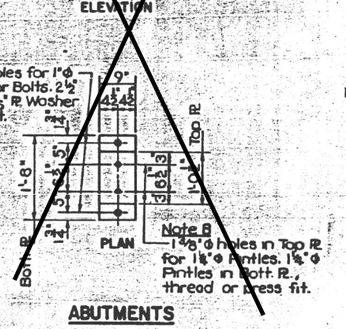

ABUTMENTS

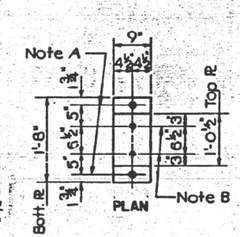

PIER 1

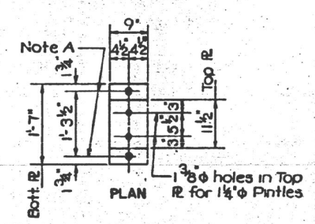

PIER 2

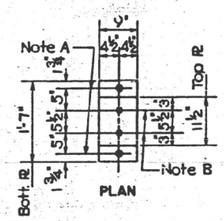

PIER 3

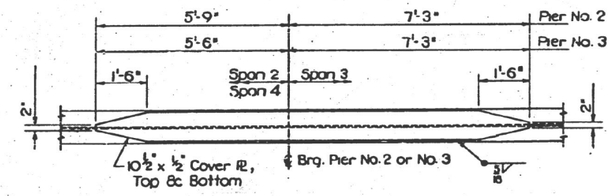

COVER PLATE DETAIL

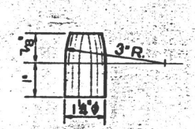

PINTLE

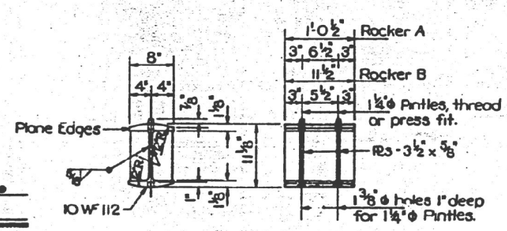

ROCKER A & B

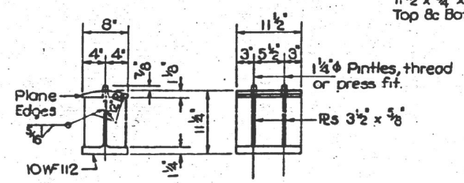

BOLSTER

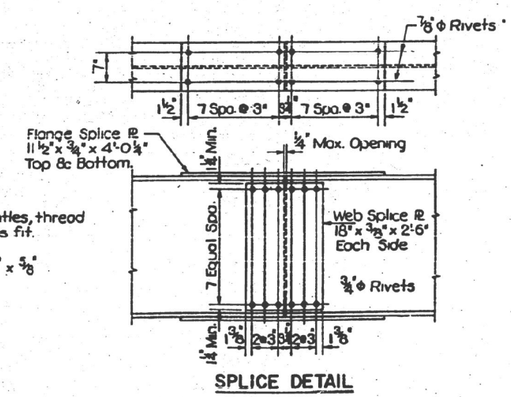

SPLICE DETAIL

STRUCTURAL STEEL DETAILS
F.A. RT. 196 OVER U.S. RT. 66

F.A. ROUTE 196 SEC. 84-3HB-4-F
SANGAMON COUNTY
STATION 674+00

DESIGNED	RES	EXAMINED	
CHECKED	gcc	PASSED	
DRAWN	D.D.O.	APPROVED	
CHECKED	gcc		

MODEL: Default
FILE NAME: G:\OPERATIONS\Bridges\Bridgeplans CAD\72L85 - 6th St pointplansheet.dgn

USER NAME = dudleybm	DESIGNED -	REVISED -	
	DRAWN -	REVISED -	
PLOT SCALE = 100.0000 ' / in.	CHECKED -	REVISED -	
PLOT DATE = 8/13/2020	DATE -	REVISED -	

STATE OF ILLINOIS
DEPARTMENT OF TRANSPORTATION

EXISTING BRIDGE PLANS, SN 084-0077
(FOR INFORMATION ONLY)

SCALE: | SHEET 7 OF 8 SHEETS | STA. | TO STA.

F.A.I. RTE.	SECTION	COUNTY	TOTAL SHEETS	SHEET NO.
72	(84-9-4) BP	SANGAMON	20	15
		CONTRACT NO. 72L85		
	ILLINOIS	FED. AID PROJECT		

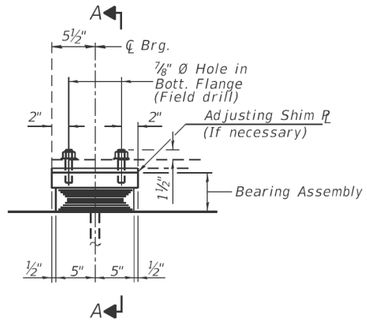

ELEVATION AT ABUT.
BEAMS 1 THRU 7

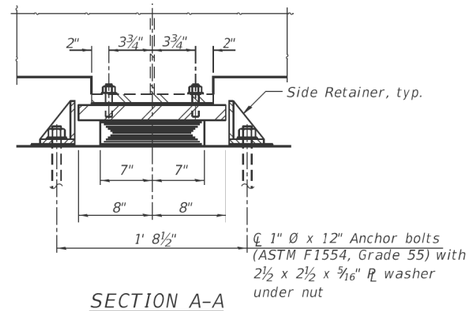

SECTION A-A
BEAMS 1 THRU 7

TYPE I ELASTOMERIC EXP. BRG.

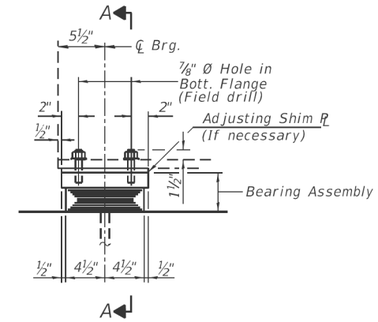

ELEVATION AT ABUT.
BEAMS 8 THRU 10

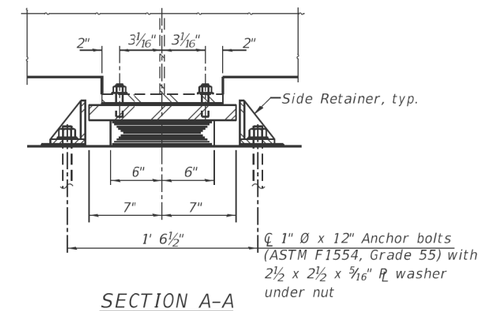

SECTION A-A
BEAMS 8 THRU 10

TYPE I ELASTOMERIC EXP. BRG.

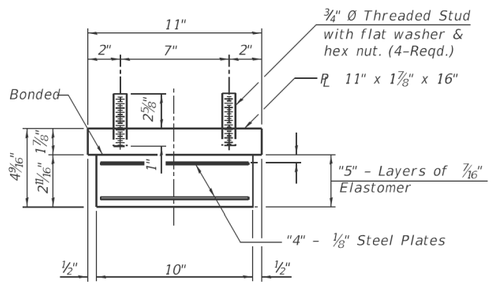

BEARING ASSEMBLY
BEAMS 1 THRU 7

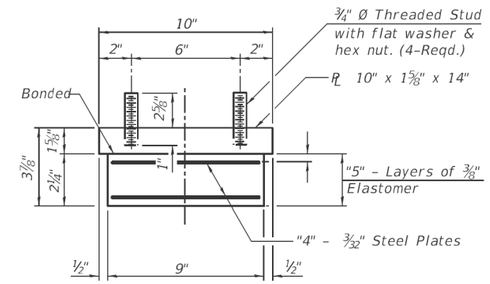

BEARING ASSEMBLY
BEAMS 8 THRU 10

Note:
Shim plates shall not be placed under Bearing Assembly.

Note:
Shim plates shall not be placed under Bearing Assembly.

Notes:
Anchor bolts shall be ASTM F1554 all-thread (or an Engineer-approved alternate material) of the grade(s) and diameter(s) specified. The corresponding specified grade of AASHTO M314 anchor bolts may be used in lieu of ASTM F1554.
Drilled and set anchor bolts sholl be installed according to Article 521.06 of the Standard Specifications.
Side retainers and other steel members required for the elastomeric bearing assembly shall be included in the cost of Elastomeric Bearing Assembly, Type I.
Beams shall be braced for stability during erection and remain braced until deck is poured and cured.
All steel for the bearings side retainers, shim plates, anchor bolts, and connection bolts shall be hot dipped galvanized.
The structural steel bearing plates for the bearings shall conform to the requirements of AASHTO M270 Gr. 50.

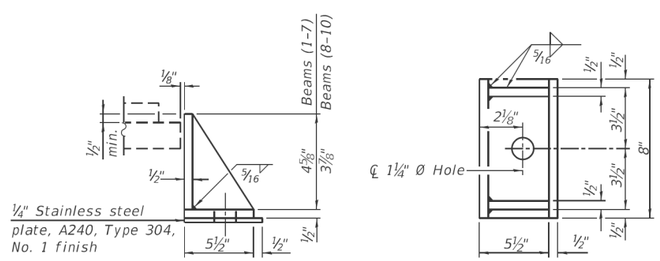

SIDE RETAINER
Equivalent rolled angle with stiffeners will be allowed in lieu of welded plates.

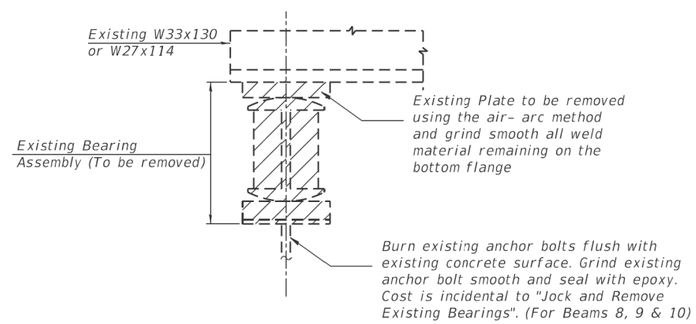

BILL OF MATERIAL

Item	Unit	Total
Elastomeric Bearing Assembly Type I	Each	20
Anchor Bolts, 1"	Each	40

I-2E-1 2-17-2017

Veenstra & Kimm, Inc.
Springfield, IL. Phone: (217)544-8033

USER NAME =	DESIGNED -	REVISED -
	CHECKED -	REVISED -
PLOT SCALE =	DRAWN -	REVISED -
PLOT DATE =	CHECKED -	REVISED -

STATE OF ILLINOIS
DEPARTMENT OF TRANSPORTATION

BEARING DETAILS
STRUCTURE NO. 084-0077

SHEET NO. 24 OF 35 SHEETS

F.A.I. RTE.	SECTION	COUNTY	TOTAL SHEETS	SHEET NO.
•	(110)RS-2, (84-9)RS-7, BR	SANGAMON	152	112
		CONTRACT NO. 72J94		
		ILLINOIS FED. AID PROJECT		

• FAI 72, FAP 666, FAI 72 4 / I-72, I-55 BUS

MODEL: Default
FILE NAME: G:\OPERATIONS\Bridges\Bridgeplans_CAD\72L85 - 6th St palmtrplansheet.dgn

USER NAME = dudleybm	DESIGNED -	REVISED -
	DRAWN -	REVISED -
PLOT SCALE = 100.0000 ' / in.	CHECKED -	REVISED -
PLOT DATE = 8/13/2020	DATE -	REVISED -

STATE OF ILLINOIS
DEPARTMENT OF TRANSPORTATION

EXISTING BRIDGE PLANS, SN 084-0077
(FOR INFORMATION ONLY)

SCALE: SHEET 8 OF 8 SHEETS STA. TO STA.

F.A.I. RTE.	SECTION	COUNTY	TOTAL SHEETS	SHEET NO.
72	(84-9-4) BP	SANGAMON	20	16
		CONTRACT NO. 72L85		
		ILLINOIS FED. AID PROJECT		

Bench Mark: Chiseled "□" top of northwest approach wall of SN 084-0104, NAVD 88 Elev. 621.85

Existing Structure: Structure No. 084-0104 was orignally built in 1966 under Section 2HB-1 in Sangamon County. The existing bridge is a four span steel wide flange beam superstructure with poured concrete deck on hammerhead piers and stub abutments. A concrete overlay was added under Section 2HB-1-DL in 1983. The back to back abutment length is 220'-6" and the out to out bridge width is 34'-0". The existing concrete deck and concrete overlay will be removed. New concrete deck (composite in positive moment regions) will be added and the abutments will be converted to semi-integral abutments.

The roadway will be closed during construction.

No Salvage

BENJAMIN BOVEE 081-007230 LICENSED STRUCTURAL ENGINEER STATE OF ILLINOIS

SIGNED: Benjamin Bovee

DATE: 01/30/2019

ILLINOIS STRUCTURAL ENGINEER
NO. 081-007230
LICENSE EXPIRES: 11-30-2020

APPROVED
FOR STRUCTURAL ADEQUACY ONLY
D. Carl Peugey JFS
ENGINEER OF BRIDGES AND STRUCTURES

INDEX OF SHEETS

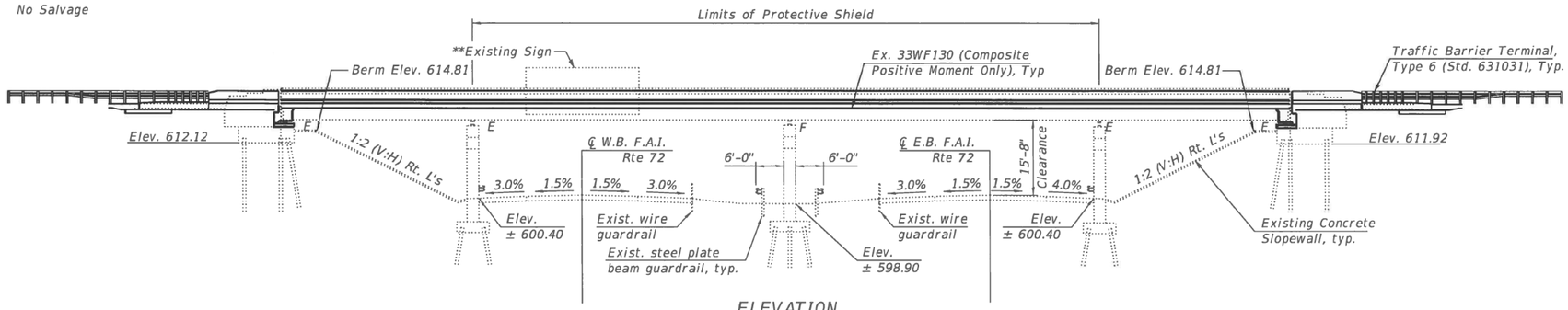

** Remove sign, properly store, and reattach after construction is completed

ELEVATION

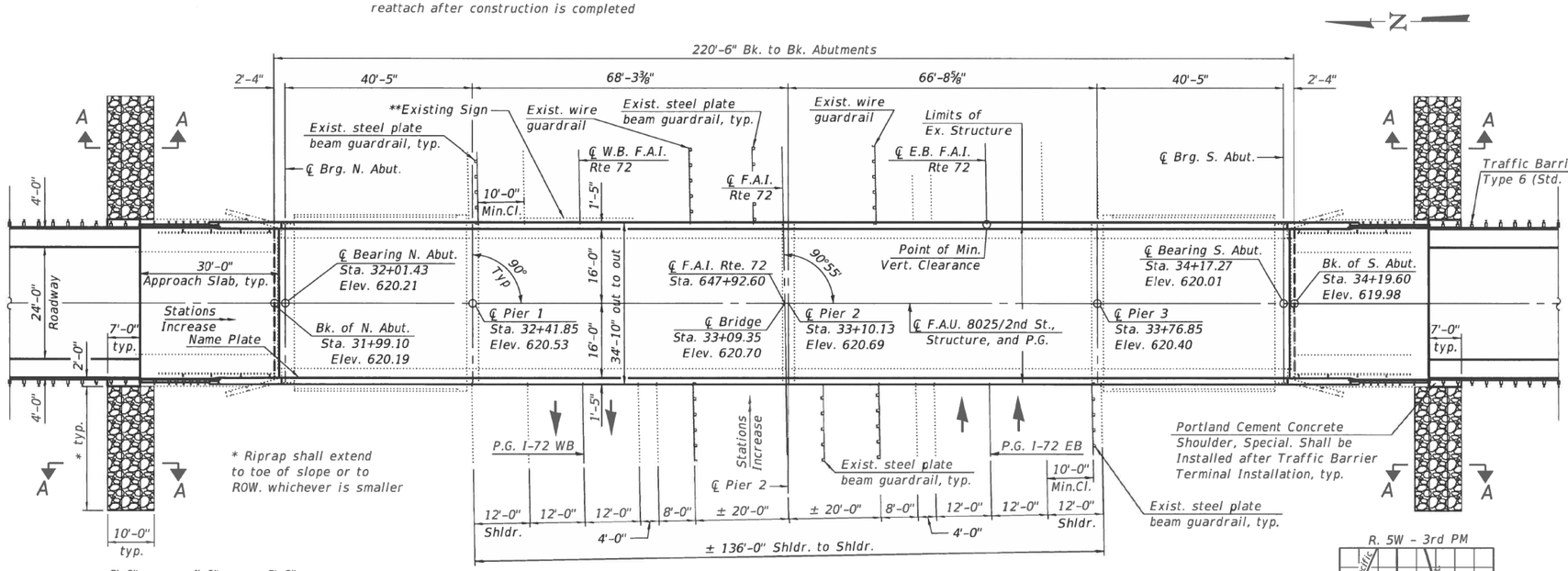

PLAN

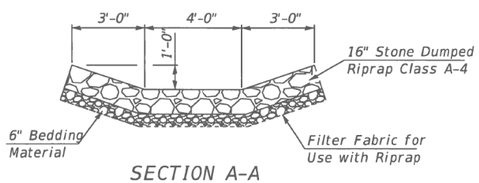

SECTION A-A

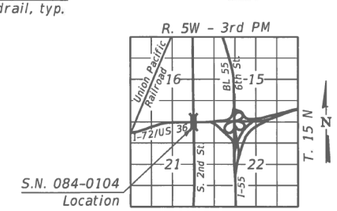

LOCATION SKETCH

DESIGN STRESSES

FIELD UNITS (Exist. Construction)

f'c = 3,500 psi
fy = 40,000 psi (Reinforcement)
fy = 36,000 psi (Structural Steel)

FIELD UNITS (New Construction)

f'c = 3,500 psi
f'c = 4,000 psi (Superstructure)
fy = 60,000 psi (Reinforcement)
fy = 50,000 psi (Structural Steel)

DESIGN SPECIFICATIONS

2002 AASHTO Standard Specifications

LOADING HS20-44

Allow 25#/sq. ft. for future wearing surface.

SEISMIC DATA

Seismic Performance Category (SPC) = A
Acceleration Coefficient (A) = 0.048
Site Coefficient (S) = 1.5

GENERAL PLAN & ELEVATION
F.A.U. 8025/2ND STREET OVER
F.A.I. ROUTE 72/US 36
SEC. (110)RS-2, (84-9)RS-7, BR
SANGAMON COUNTY
STATION 33+09.35
STRUCTURE NO. 084-0104

FILE NAME: P:\17-1040.05 2nd Street over I72\10_CAD\CADD Sheets\U84\0104-96025_001_GP & E.dgn

1/30/2019 7:57:11 AM

Kaskaskia Engineering Group, LLC
PROFESSIONAL DESIGN FIRM: Illinois Professional Design Firm Professional Engineering Group LICENSE NO. 184.001972 EXPIRES 30-APRIL-2020

USER NAME =	DESIGNED - MC	REVISED -	
	CHECKED - BB	REVISED -	
PLOT SCALE =	DRAWN - RJO	REVISED -	
PLOT DATE =	CHECKED - BB	REVISED -	

STATE OF ILLINOIS
DEPARTMENT OF TRANSPORTATION

GENERAL PLAN & ELEVATION
STRUCTURE NO. 084-0104

SHEET 1 OF 26 SHEETS

F.A.* RTE.	SECTION	COUNTY	TOTAL SHEETS	SHEET NO.
*	(110)RS-2, (84-9)RS-7, BR	SANGAMON	152	127
		CONTRACT NO. 72J94		
		ILLINOIS FED. AID PROJECT		

* FAI 72, FAP 666, FAI 72 4 / I-72, I-55 BUS

MODEL: Default
FILE NAME: C:\OPERATIONS\Bridges\Bridgeplans_CAD\72L85 - 6th St pointtubansheet.dgn

USER NAME = dudleybm	DESIGNED -	REVISED -	
	DRAWN -	REVISED -	
PLOT SCALE = 100.0000 ' / in.	CHECKED -	REVISED -	
PLOT DATE = 8/13/2020	DATE -	REVISED -	

STATE OF ILLINOIS
DEPARTMENT OF TRANSPORTATION

EXISTING BRIDGE PLANS, SN 084-0104
(FOR INFORMATION ONLY)

SCALE: SHEET 1 OF 4 SHEETS STA. TO STA.

F.A.I. RTE.	SECTION	COUNTY	TOTAL SHEETS	SHEET NO.
72	(84-9-4) BP	SANGAMON	20	17
		CONTRACT NO. 72L85		
		ILLINOIS FED. AID PROJECT		

GENERAL NOTES

No field welding is permitted except as specified in the contract documents.

The Contractor shall test the existing welds by non-destructive methods within 2 ft. of the end of the existing cover plates for cracks after removal of the existing concrete deck. Dye penetrant (PT), magnetic particle (MT), or other approved testing method shall be performed by qualified personnel approved by the Engineer. If cracks are found, report them to the Bureau of Bridges and Structures for disposition. The cost of testing is included in Removal of Existing Concrete Deck. The cost of crack repair, if necessary, will be paid for according to Article 109.04 of the Standard Specifications.

Reinforcement bars designated (E) shall be epoxy coated.

Prior to pouring the new concrete deck, all heavy or loose rust, loose mill scale, and other loose or potentially detrimental foreign material shall be removed from the surfaces in contact with concrete. Tightly adhered paint may remain unless otherwise noted. Removal shall be accomplished by methods that will not damage the steel and the cost will be included in the pay item covering removal of the existing concrete.

As directed by the Engineer, existing construction accessories welded to the top flange of beams and girders shall be removed. The weld areas shall be ground flush and inspected for cracks using magnetic particle testing (MT) or dye penetrant testing (PT) by qualified personnel approved by the Engineer.

Any cracks that cannot be removed by grinding ¼ inch deep shall be identified and reported to the Bureau of Bridges and Structures for further disposition. The cost of removing welded accessories, grinding and inspecting weld areas and grinding cracks will be paid for according to Article 109.04 of the Standard Specifications.

Plan dimensions and details relative to existing plans are subject to nominal construction variations. The Contractor shall field verify existing dimensions and details affecting new construction and make necessary approved adjustments prior to construction or ordering of materials. Such variations shall not be cause for additional compensation for a change in scope of the work, however, the Contractor will be paid for the quantity actually furnished at the unit price bid for the work.

Bearing seat surfaces shall be constructed or adjusted to the designated elevations within a tolerance of ⅛ inch (0.01 ft.). Adjustment shall be made either by grinding the surface or by shimming the bearings.

The existing concrete slopewalls are heavily undermined. Additional riprap may be required.

Existing reinforcement shall be cleaned and incorporated into the new construction. Cost included with Concrete Removal.

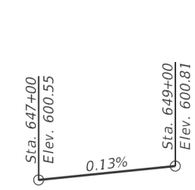

PROFILE GRADE

(Along ℄ I-72 EB and WB)

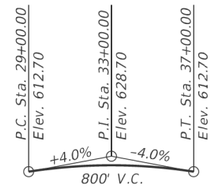

PROFILE GRADE

(Along ℄ 2nd Street)

STATION 33+09.35
BUILT BY
STATE OF ILLINOIS
LOADING HS20-44
STRUCTURE NO. 084-0104

NAME PLATE

See Std. 515001

Existing Name Plate shall be cleaned and relocated next to new Name Plate. Cost included with Name Plates.

TOTAL BILL OF MATERIAL

ITEM	UNIT	SUPER	SUB	TOTAL
Stone Riprap, Class A4	Sq. Yd.	89		89
Protective Coat	Sq. Yd.	1,241		1,241
Concrete Removal	Cu. Yd.		15.0	15.0
Removal of Existing Concrete Deck No. 2	Each	1		1
Protective Shield	Sq. Yd.	523		523
Structure Excavation	Cu. Yd.	107		107
Concrete Structures	Cu. Yd.		26.0	26.0
Concrete Superstructure	Cu. Yd.	298.9		298.9
Bridge Deck Grooving	Sq. Yd.	925		925
Stud Shear Connectors	Each	3,294		3,294
Jack and Remove Existing Bearings	Each	12		12
Reinforcement Bars, Epoxy Coated	Pound	105,370	680	106,050
Name Plates	Each	1		1
Elastomeric Bearing Assembly, Type 1	Each	12		12
Anchor Bolts, ¾"	Each	24		24
Granular Backfill for Structures	Cu. Yd.	107		107
Filter Fabric	Sq. Yd.	89		89
Concrete Superstructure (Approach Slab)	Cu. Yd.	95.7		95.7
Geocomposite Wall Drain	Sq. Yd.	52		52
Remove Overhead Sign Structure Bridge Mounted	Each	1		1
Overhead Sign Structure - Bridge Mounted	Foot	26		26
Pipe Underdrains for Structures, 4"	Foot		102	102
Bar Splicers	Each	76		76
Structural Repair of Concrete (Depth equal to or less than 5")	Sq. Ft.		97	97

SCOPE OF WORK

1. Remove upper portion of existing wingwalls for Bridge approach slab.
2. Remove existing concrete deck.
3. Reconfigure existing abutments and wingwalls to semi-integral abutment configuration.
4. Construct new concrete deck. Make new deck composite in positive moment regions.
5. Repair voids under the existing concrete slope walls.
6. Repair existing substructure units.
7. Clean and paint existing structural steel under separate "Paint Only" contract.
8. Remove and Replace existing Bridge Mounted Sign.

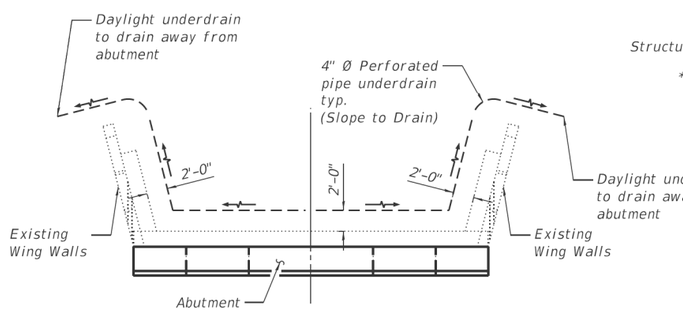

4" Ø PERFORATED PIPE UNDERDRAIN LAYOUT

*Included in the cost of Pipe Underdrains for Structures, 4". (See Special Provisions)

**Cost included with Concrete Superstructure.

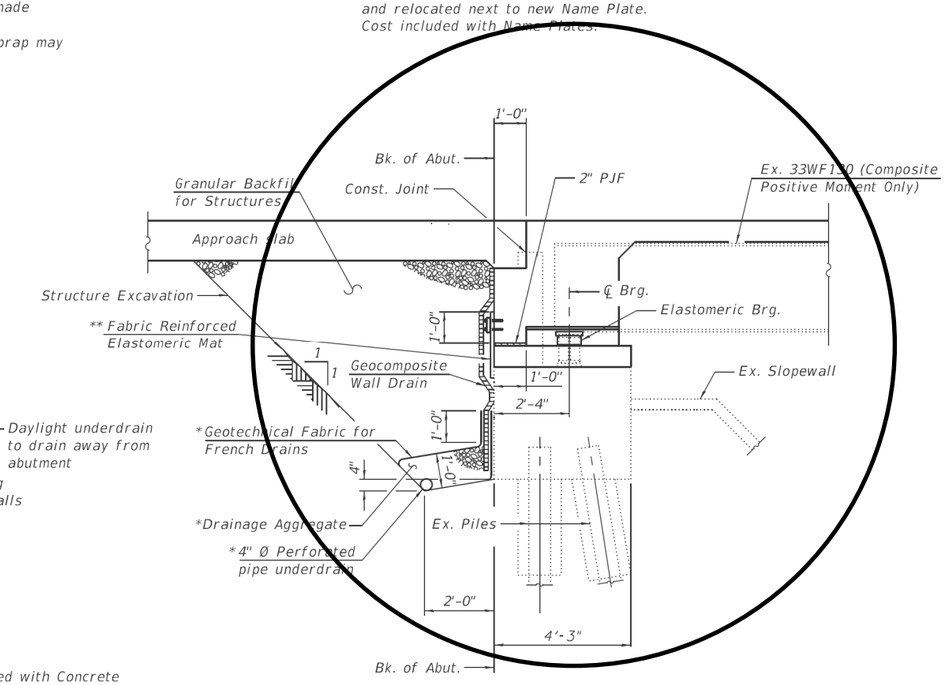

SECTION THRU SEMI-INTEGRAL ABUTMENT

(Horiz. dim. @ Rt. {'s)

Kaskaskia Engineering Group, LLC
PROFESSIONAL REGISTRATIONS
Illinois Professional Design Firm: 184.003713
Professional Engineering Group: 20-3000586
200 E. Main St., Suite 300
Belleville, Illinois 62220
618.233.5877 phone
618.233.5977 fax
www.kaskaskiaeng.com

USER NAME =	DESIGNED - MC	REVISED -	
	CHECKED - BB	REVISED -	
PLOT SCALE =	DRAWN - RJO	REVISED -	
PLOT DATE =	CHECKED - BB	REVISED -	

STATE OF ILLINOIS
DEPARTMENT OF TRANSPORTATION

GENERAL DATA
STRUCTURE NO. 084-0104

SHEET 2 OF 26 SHEETS

F.A.* RTE.	SECTION	COUNTY	TOTAL SHEETS	SHEET NO.
*	(110)RS-2, (84-9)RS-7, BR	SANGAMON	152	128
		CONTRACT NO. 72J94		
		ILLINOIS FED. AID PROJECT		

* FAI 72, FAP 666, FAI 72 4 / I-72, I-55 BUS

3/12/2019 11:54:55 AM

USER NAME = dudleybm	DESIGNED -	REVISED -	
	DRAWN -	REVISED -	
PLOT SCALE = 100.0000 ' / in.	CHECKED -	REVISED -	
PLOT DATE = 8/13/2020	DATE -	REVISED -	

STATE OF ILLINOIS
DEPARTMENT OF TRANSPORTATION

EXISTING BRIDGE PLANS, SN 084-0104
(FOR INFORMATION ONLY)

SCALE: SHEET 2 OF 4 SHEETS STA. TO STA.

F.A.I. RTE.	SECTION	COUNTY	TOTAL SHEETS	SHEET NO.
72	(84-9-4) BP	SANGAMON	20	18
		CONTRACT NO. 72L85		
		ILLINOIS FED. AID PROJECT		

MODEL: Default
FILE NAME: G:\OPERATIONS\Bridges\Bid\plans_CAD\72L85 - 6th St paint\plansheet.dgn

STATE OF ILLINOIS
DEPARTMENT OF PUBLIC WORKS & BUILDINGS
DIVISION OF HIGHWAYS

ROUTE NO.	SECTION	COUNTY	TOTAL SHEETS	SHEET NO.
S.B.I. F.A. 196	2HB-1	Sangamon	156	38
FED. ROAD DIST. NO. 7	ILLINOIS	FED. AID PROJECT-		

SHEET NO. 4
9 SHEETS

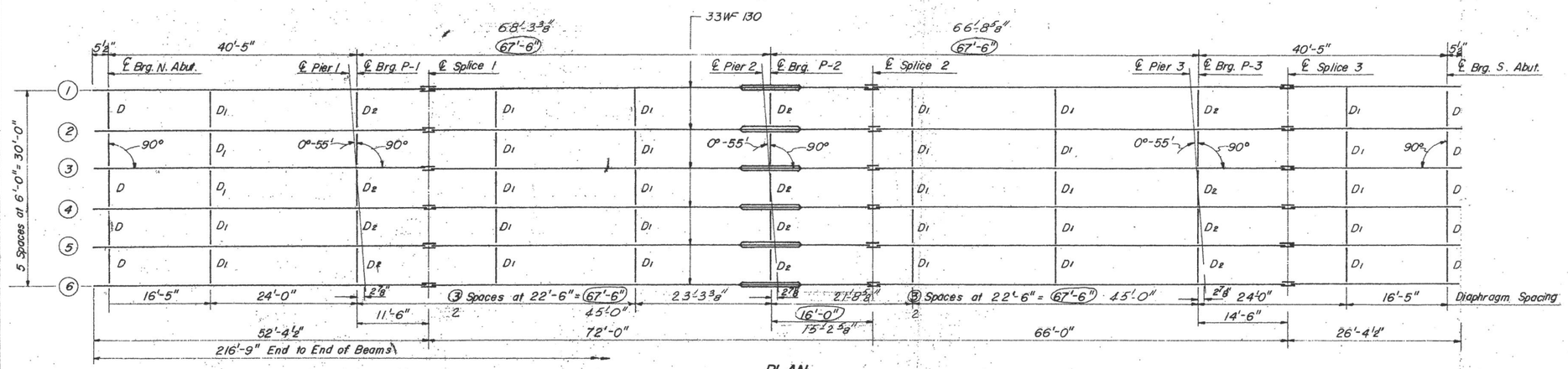

PLAN

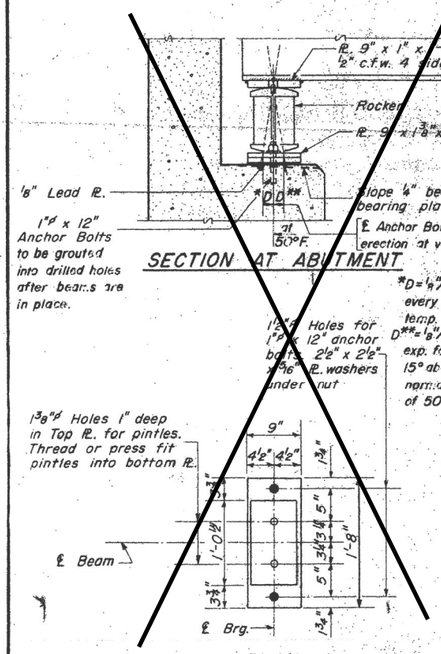

SECTION AT ABUTMENT

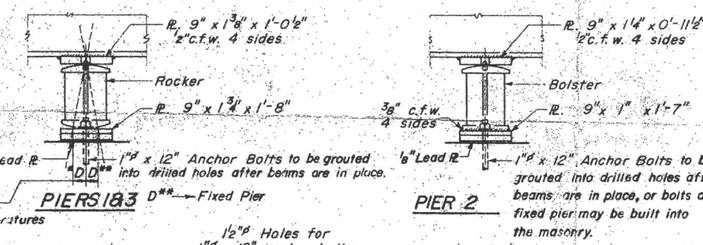

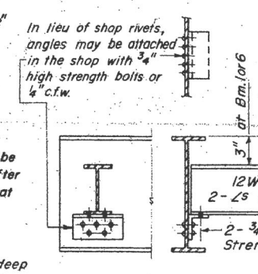

DIAPHRAGM D
10 Required

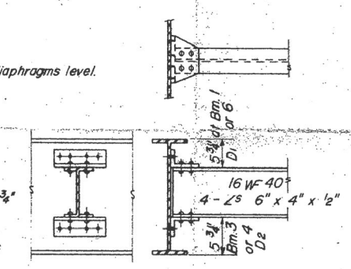

DIAPHRAGM D1 or D2
45 Required

ELEVATION TOP OF WF

	Bm. 1 & 6	Bm. 2 & 5	Bm. 3 & 4
℄ Brg. N. Abut.	G19.77	G19.83	G19.94
℄ Brg. Pier 1	G20.03	G20.14	G20.20
℄ Splice 1	G20.10	G20.21	G20.27
℄ Brg. Pier 2	G20.15	G20.26	G20.32
℄ Splice 2	G20.17	G20.28	G20.34
℄ Brg. Pier 3	G19.86	G19.97	G20.03
℄ Splice 3	G19.77	G19.83	G19.94
℄ Brg. S. Abut.	G19.57	G19.68	G19.74

PLAN

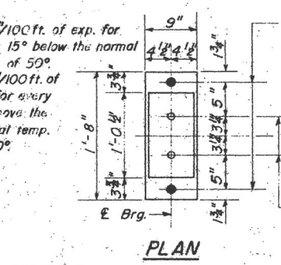

PLAN

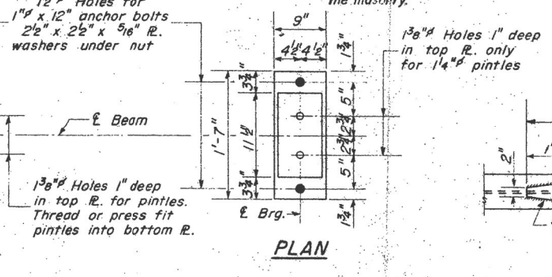

PLAN

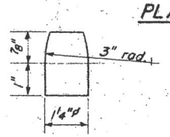

DETAIL OF PINTLE

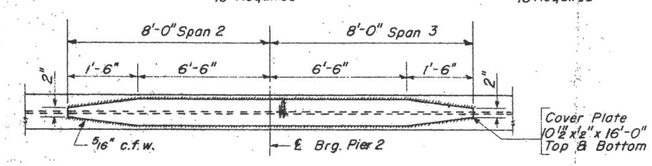

DETAIL OF COVER PLATE

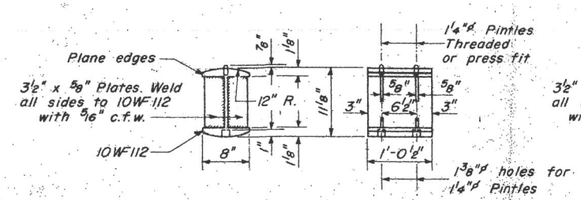

DETAIL OF ROCKER AT PIERS 1, 3 & ABUTS.

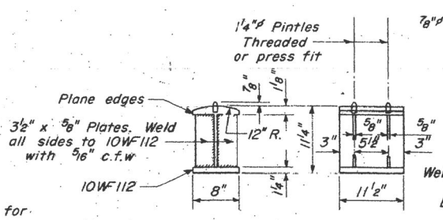

DETAIL OF BOLSTER AT PIER 2

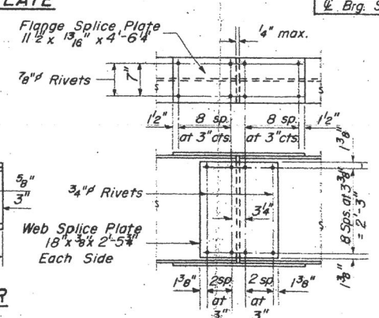

DETAIL OF SPLICE

STRUCTURAL STEEL
F.A. ROUTE 196
SEC. 2HB-1
SANGAMON COUNTY
STA. 647+92.60

DESIGNED	Stanley S. Lee	
CHECKED	Mahitin Ozturk	
P.G. Barnett	Joseph L. Putnam	
DRAWN	W. A. Sausoman Jr.	
CHECKED	Mahitin Ozturk	

JULY 13 1964

EXAMINED	W. A. Sausoman	ENGINEER OF BRIDGE AND TRAFFIC STRUCTURES
PASSED	[signature]	ENGINEER OF DESIGN
APPROVED	U. E. Ruff	CHIEF HIGHWAY ENGINEER

I-2-C 7-2-62 Rev. 11-9-62 Rev. 8-16-63 Rev. 12-10-63

MODEL: Default
FILE NAME: G:\OPERATIONS\Bridge\Bridgeplans_CAD\72L85 - 6th St pointplansheet.dgn

USER NAME = dudleybm	DESIGNED -	REVISED -	
	DRAWN -	REVISED -	
PLOT SCALE = 100.0000 ' / in.	CHECKED -	REVISED -	
PLOT DATE = 8/13/2020	DATE -	REVISED -	

STATE OF ILLINOIS
DEPARTMENT OF TRANSPORTATION

EXISTING BRIDGE PLANS, SN 084-0104
(FOR INFORMATION ONLY)

SCALE: | SHEET 3 OF 4 SHEETS | STA. | TO STA.

F.A.I. RTE.	SECTION	COUNTY	TOTAL SHEETS	SHEET NO.
72	(84-9-4) BP	SANGAMON	20	19
		CONTRACT NO. 72L85		
		ILLINOIS	FED. AID PROJECT	

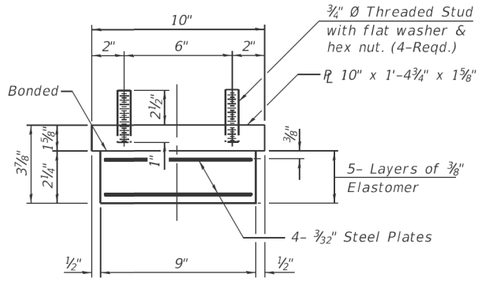

BEARING ASSEMBLY

Note:
Shim plates shall not be placed under Bearing Assembly.

INTERIOR GIRDER MOMENT TABLE					
		0.4 Sp. 1 or 0.6 Sp. 4	Pier 1 or 3	0.5 Sp. 2 or 0.5 Sp. 3	Pier 2
	Is (in⁴)	6608	6608	6608	9571
	Ic(n) (in⁴)	18781	–	18781	–
	Ic(3n) (in⁴)	13508	–	13508	–
	Ss (in³)	399	399	399	561
	Sc(n) (in³)	632	–	632	–
	Sc(3n) (in³)	569	–	569	–
	Z (in³)	467.0	467.0	467.0	467.0
	wD (k/')	0.77	0.77	0.77	0.81
	MD (ft k)	61.3	223.6	153.0	346.8
	sD (k/')	0.32	0.32	0.32	0.32
	MsD (ft k)	31.9	79.0	82.1	126.1
	ML (ft k)	216.0	158.4	362.3	169.0
	MI (ft k)	64.8	44.3	94.1	43.9
	5/3 [ML + MI] (ft k)	468.1	337.8	760.7	354.9
	Ma (ft k)	729.7	832.4	1294.5	1076.1
*	Mu (ft k)	2680.5	–	2680.5	–
	fs D non-comp (ksi)	1.8	6.7	4.6	7.4
	fs D (comp) (ksi)	0.7	2.4	1.7	2.7
	fs 5/3 [ML + MI] (ksi)	8.9	10.2	14.4	7.6
	fs (Overload) (ksi)	11.4	19.2	20.8	17.7
**	fs (Total) (ksi)	–	25.0	–	23.0
	VR (k)	60.6	–	65.4	–

Is, Ss: Non-composite moment of inertia and section modulus of the steel section used for computing fs(Total and Overload) due to non-composite dead loads (in.⁴ and in.³).
Ic(n), Sc(n): Composite moment of inertia and section modulus of the steel and deck based upon the modular ratio, "n", used for computing fs(Total and Overload) due to short-term composite live loads (in.⁴ and in.³).
Ic(3n), Sc(3n): Composite moment of inertia and section modulus of the steel and deck based upon 3 times the modular ratio, "3n", used for computing fs(Total and Overload) due to long-term composite (superimposed) dead loads (in.⁴ and in.³).
Z: Plastic Section Modulus of the steel section in non-composite areas (in.³).
wD: Un-factored non-composite dead load (kips/ft.).
MD: Un-factored moment due to non-composite dead load (kip-ft.).
sD: Un-factored long-term composite (superimposed) dead load (kips/ft.)
MsD: Un-factored moment due to long-term composite (superimposed) dead load (kip-ft.)
ML: Un-factored live load moment (kip-ft.).
MI: Un-factored moment due to impact (kip-ft.).
Ma: Factored design moment (kip-ft.).
1.3 [MD + MsD + 5/3 (ML + MI)]
Mu: Compact composite moment capacity according to AASHTO LFD 10.50.1.1 or compact non-composite moment capacity according to AASHTO LFD 10.48.1 (kip-ft.).
fs (Overload): Sum of stresses as computed from the moments below (ksi).
MD + MsD + 5/3 (ML + MI)
fs (Total): Sum of stresses as computed from the moments below on non-compact section (ksi).
1.3 [MD + MsD + 5/3 (ML + MI)]
VR: Maximum L + impact shear range within the composite portion of the span for stud shear connector design (kips).

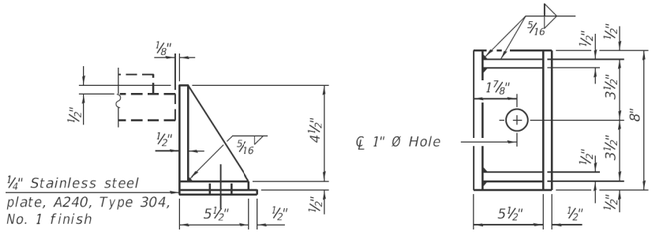

SIDE RETAINER

Equivalent rolled angle with stiffeners will be allowed in lieu of welded plates.

INTERIOR GIRDER REACTION TABLE				
		Abut.	Pier 1 or 3	Pier 2
	RD (k)	41.5	31.7	39.8
	RL (k)	43.6	37.8	37.6
	RI (k)	13.1	10.6	9.8
	RTotal (k)	98.2	80.0	87.2

* Compact section
** Braced non-compact and partially braced section

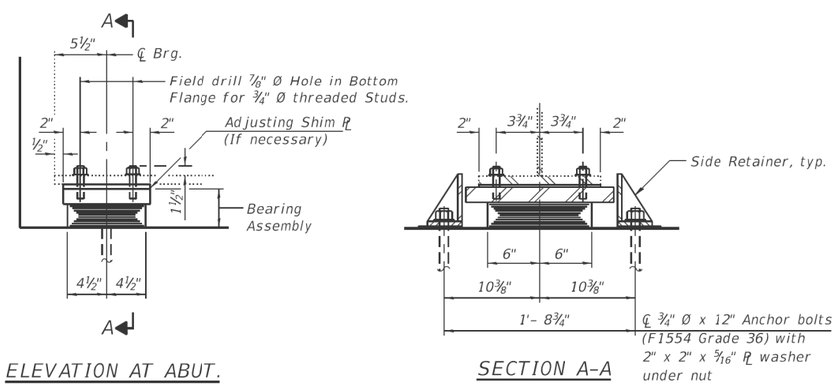

ELEVATION AT ABUT.

SECTION A-A

TYPE I ELASTOMERIC EXP. BRG.

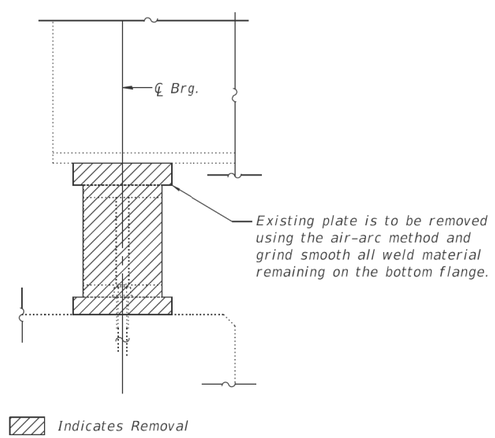

EXISTING BEARING REMOVAL DETAIL

(12 Required)
(6 N. Abutment & 6 S. Abutment)

Notes:
Anchor bolts shall be ASTM F1554 all-thread (or an Engineer-approved alternate material) of the grade(s) and diameter(s) specified. The corresponding specified grade of AASHTO M314 anchor bolts may be used in lieu of ASTM F1554.
Side retainers and other steel members required for the elastomeric bearing assembly shall be included in the cost of Elastomeric Bearing Assembly, Type I.
Two ⅛ in. adjusting shims shall be provided for each bearing in addition to all other plates or shims and placed as shown on bearing details.
All Bearing plates shall be AASHTO M270 Grade 50.

BILL OF MATERIAL

Item	Unit	Total
Elastomeric Bearing Assembly Type I	Each	12
Anchor Bolts, ¾"	Each	24

Kaskaskia Engineering Group, LLC
PROFESSIONAL ENGINEERS
Illinois Professional Design Firm: Professional Engineering Group
LICENSED 184
184.004713
20-5000086
200 E. Main St., Suite 300
Belleville, Illinois 62220
618.355.0075 phone
618.233.5975 fax
www.kaskaskiaeng.com

USER NAME =	DESIGNED - MC	REVISED -	
	CHECKED - BB	REVISED -	
PLOT SCALE =	DRAWN - RJO	REVISED -	
PLOT DATE =	CHECKED - BB	REVISED -	

STATE OF ILLINOIS
DEPARTMENT OF TRANSPORTATION

BEARING DETAILS
STRUCTURE NO. 084-0104

SHEET 13 OF 26 SHEETS

F.A.* RTE.	SECTION	COUNTY	TOTAL SHEETS	SHEET NO.
*	(110)RS-2, (84-9)RS-7, BR	SANGAMON	152	139
		CONTRACT NO. 72J94		
		ILLINOIS	FED. AID PROJECT	

* FAI 72, FAP 666, FAI 72 4 / I-72, I-55 BUS

2/8/2019 12:51:35 PM

USER NAME = dudleybm	DESIGNED -	REVISED -	
	DRAWN -	REVISED -	
PLOT SCALE = 100.0000 ' / in.	CHECKED -	REVISED -	
PLOT DATE = 8/13/2020	DATE -	REVISED -	

STATE OF ILLINOIS
DEPARTMENT OF TRANSPORTATION

EXISTING BRIDGE PLANS, SN 084-0104
(FOR INFORMATION ONLY)

SCALE: SHEET 4 OF 4 SHEETS STA. TO STA.

F.A.I. RTE.	SECTION	COUNTY	TOTAL SHEETS	SHEET NO.
72	(84-9-4) BP	SANGAMON	20	20
		CONTRACT NO. 72L85		
		ILLINOIS	FED. AID PROJECT	

MODEL: Default
FILE NAME: G:\OPERATIONS\Bridges\Bridgeplans_CAD\72L85 - 6th St pdf\bridgeplans_sheet.dgn