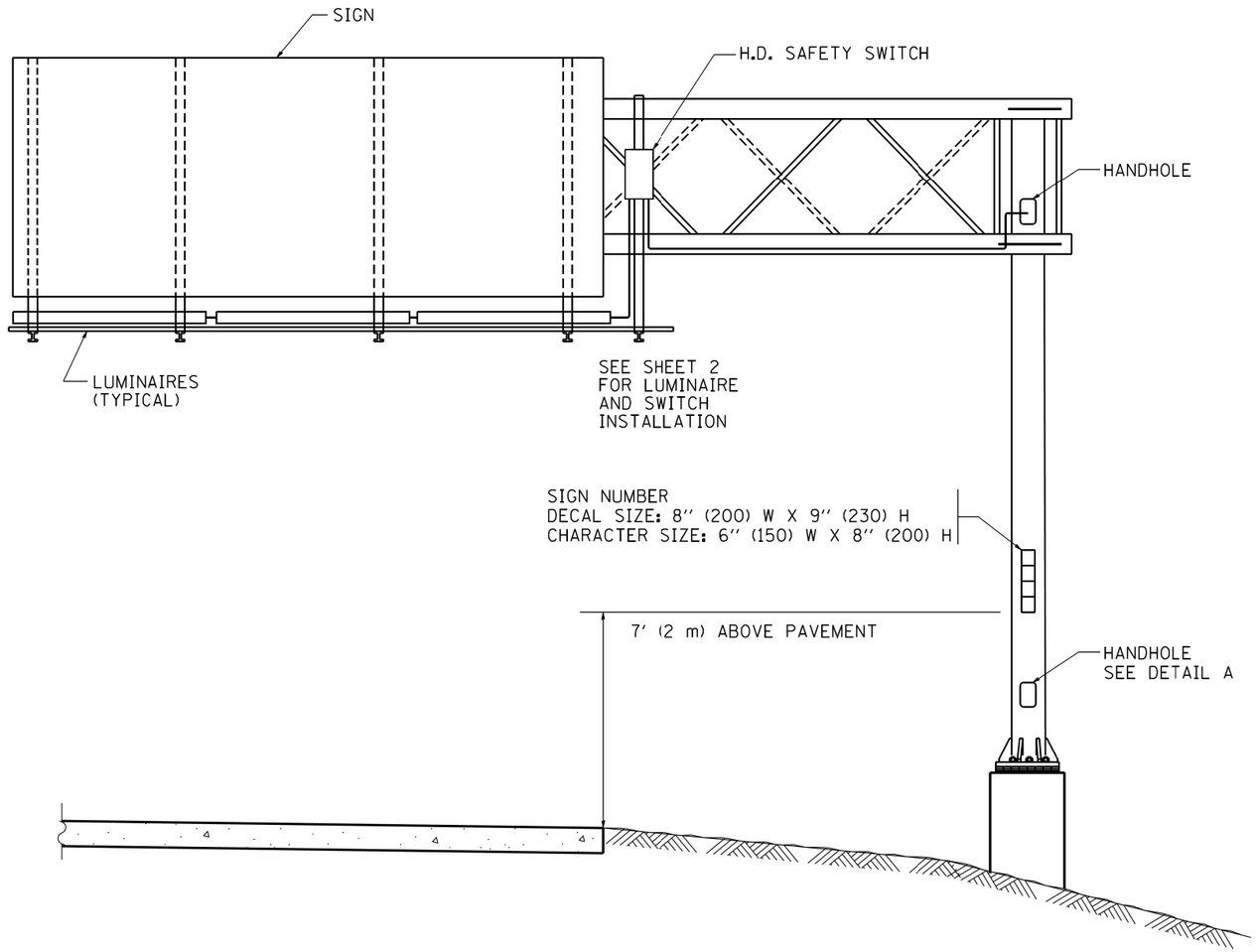

NOTES:

1. ALL DIMENSIONS ARE IN INCHES (MILLIMETERS) UNLESS OTHERWISE SHOWN
2. ALL CONDUIT ATTACHED TO STRUCTURE SHALL BE GALVANIZED RIGID METALIC CONDUIT, PVC COATED (GRMC, PVC)
3. THE USE OF LIQUID TIGHT METAL CONDUIT (TYPE LFMC) SHALL BE LIMITED TO LOCATIONS WHERE MOVEMENT IS ANTICIPATED AND SHALL NOT EXCEED 5' (1.5M) IN LENGTH
4. ALL WORK INDICATED SHALL BE INCLUDED IN THE PAY ITEM FOR ELECTRIC CONNECTION TO SIGN STRUCTURE
5. THE SAFETY SWITCH SHALL BE LOCATED ON THE SIDE OF THE SIGN STRUCTURE WHICH IS CLOSEST TO THE SHOULDER, OR EDGE OF PAVEMENT.

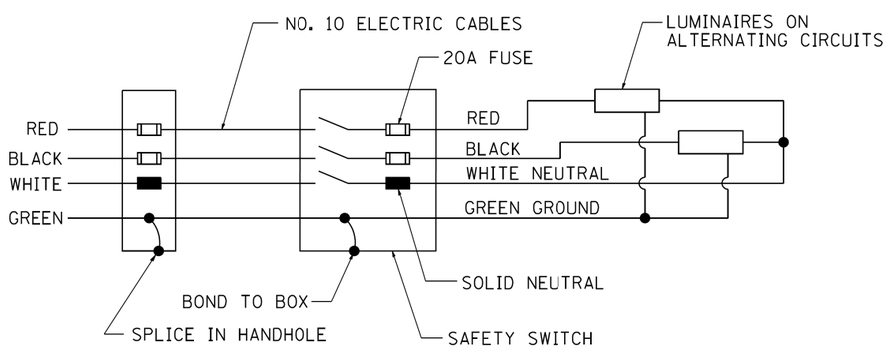

WIRING DIAGRAM

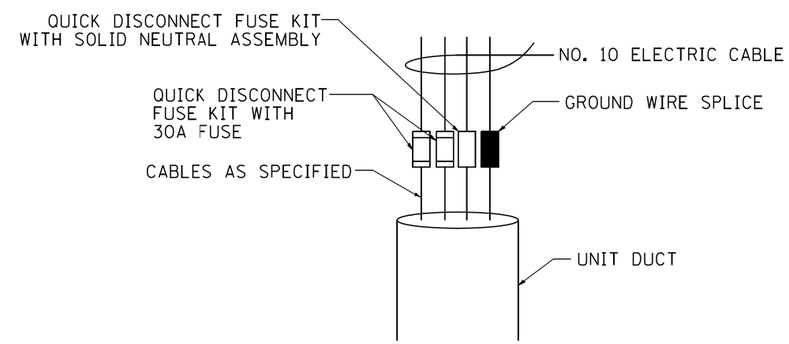

DETAIL A

FILE NAME = Wi\diststd\22x34\be601.dgn	USER NAME = gaglianobt	DESIGNED -	REVISED - 08-19-04	STATE OF ILLINOIS DEPARTMENT OF TRANSPORTATION	ELECTRIC CONNECTION TO SIGN STRUCTURE CANTILEVER TYPE	F.A.I. RTE.	SECTION	COUNTY	TOTAL SHEETS	SHEET NO.
		DRAWN -	REVISED -			90/94	2012-0521	COOK	165	101
	PLOT SCALE = 50.0000 ' / IN.	CHECKED -	REVISED -			BE-601		CONTRACT NO. 60T93		
	PLOT DATE = 1/4/2008	DATE -	REVISED -		SCALE: NONE / SHEET NO. 1 OF 2 SHEETS / STA. / TO STA.	FED. ROAD DIST. NO. 1	ILLINOIS	FED. AID PROJECT		

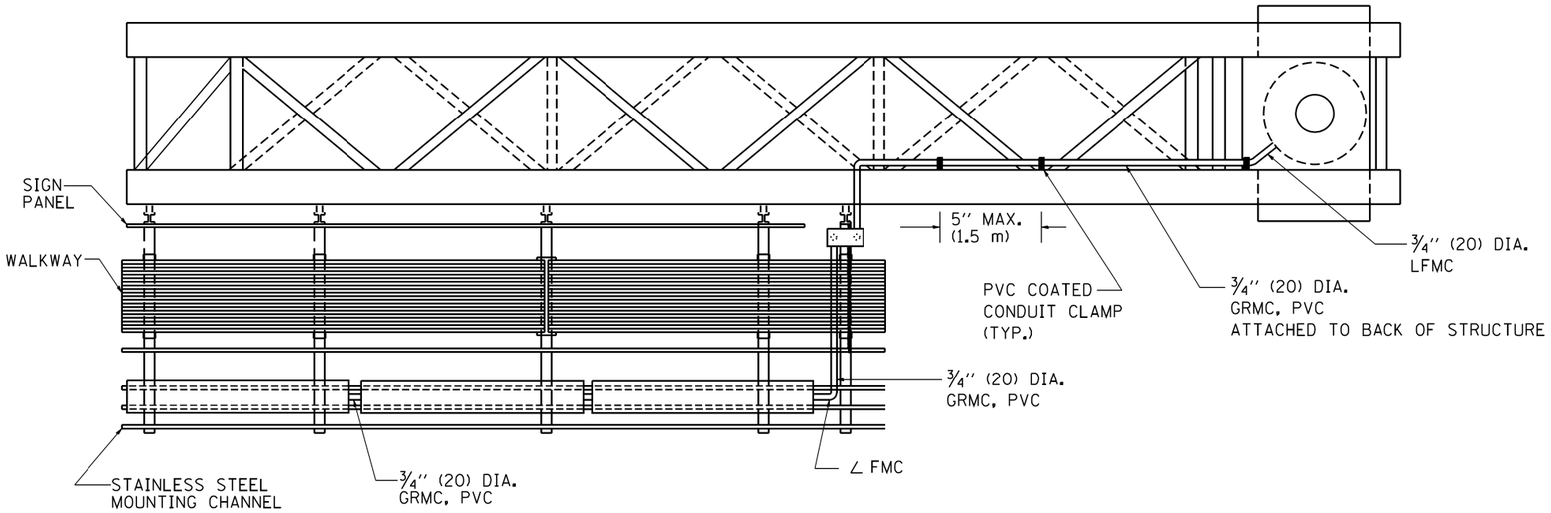

TOP VIEW

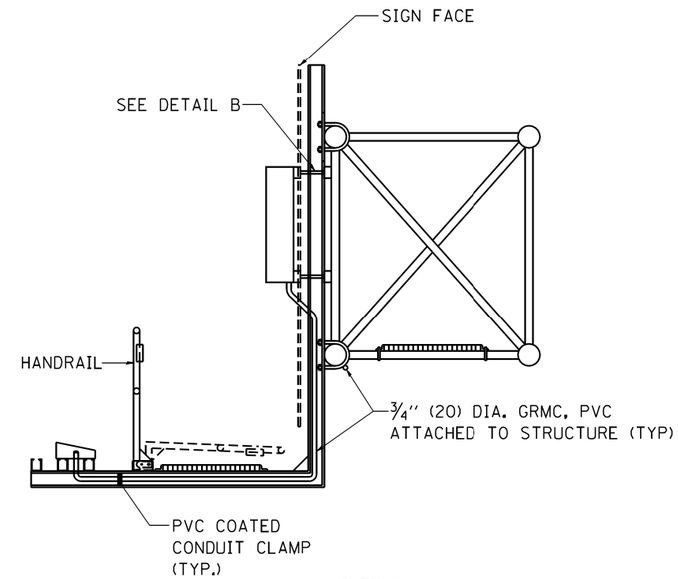

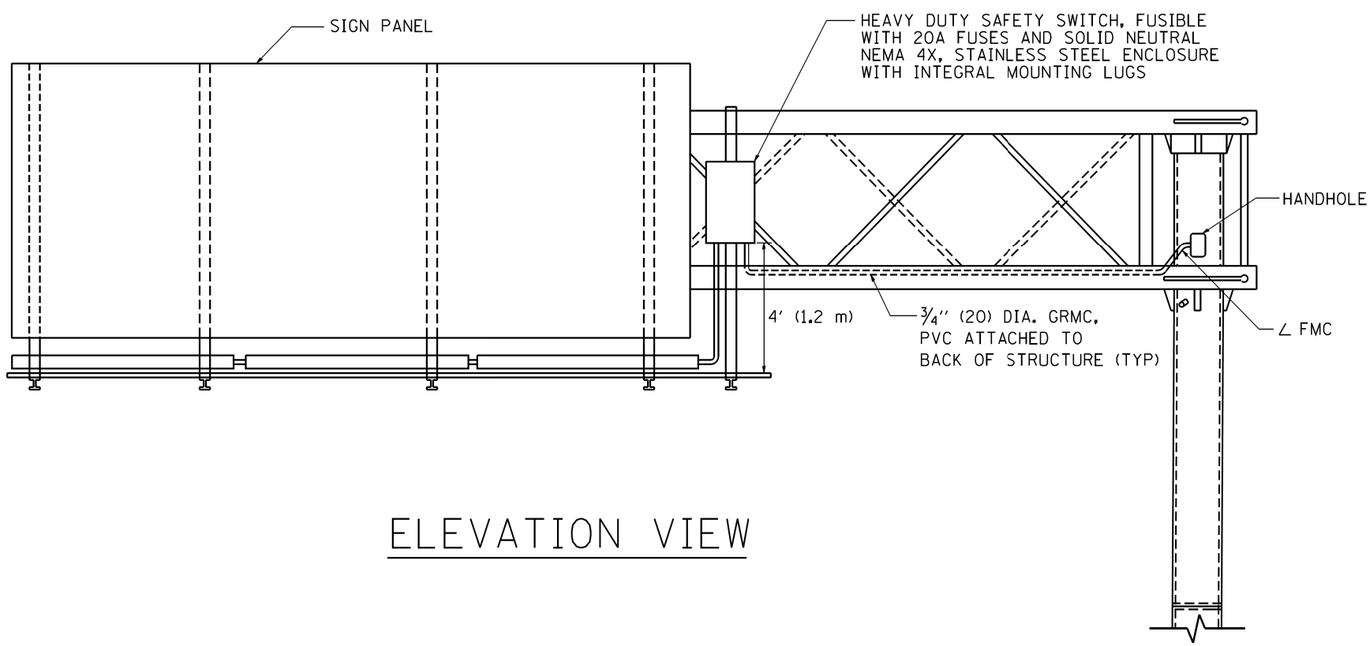

ELEVATION VIEW

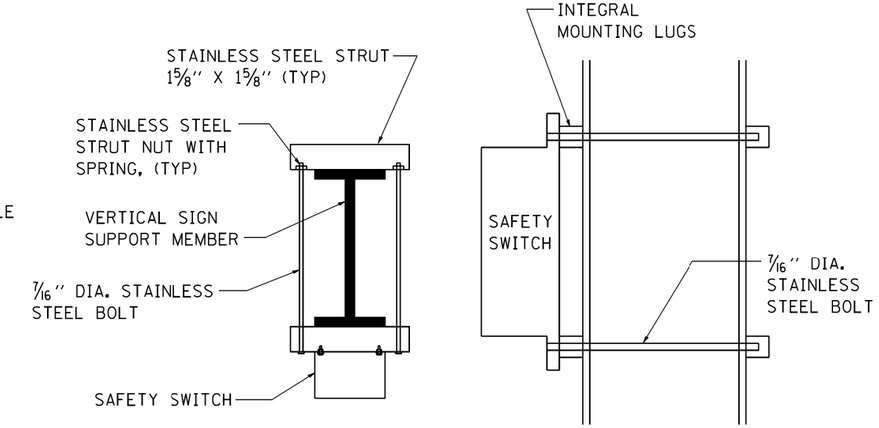

TOP VIEW SIDE VIEW

DETAIL B

FILE NAME = Wi\diststd\22x34\be601.dgn	USER NAME = gaglianobt	DESIGNED -	REVISED - 08-19-04	STATE OF ILLINOIS DEPARTMENT OF TRANSPORTATION	ELECTRIC CONNECTION TO SIGN STRUCTURE CANTILEVER TYPE	F.A.I. RTE.	SECTION	COUNTY	TOTAL SHEETS / SHEET NO.
		DRAWN -	REVISED -			90/94	2012-0521	COOK	165 / 102
	PLOT SCALE = 50.0000 '/ IN.	CHECKED -	REVISED -			BE-601		CONTRACT NO. 60T93	
	PLOT DATE = 1/4/2008	DATE -	REVISED -		SCALE: NONE / SHEET NO. 2 OF 2 SHEETS / STA. / TO STA.	FED. ROAD DIST. NO. 1	ILLINOIS	FED. AID PROJECT	

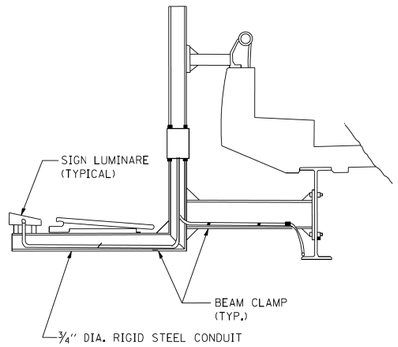

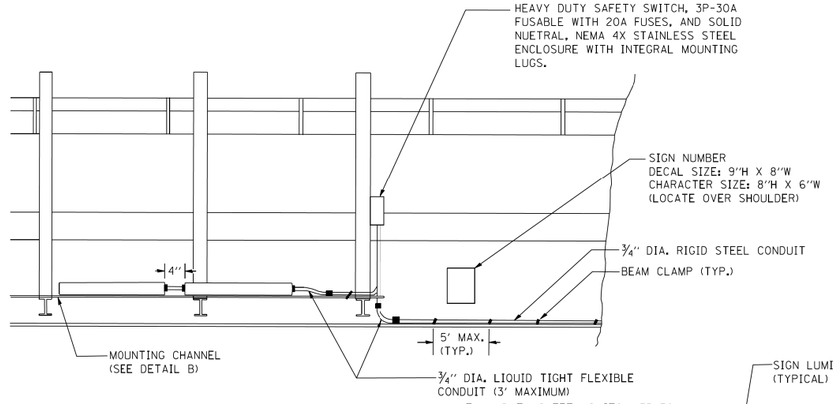

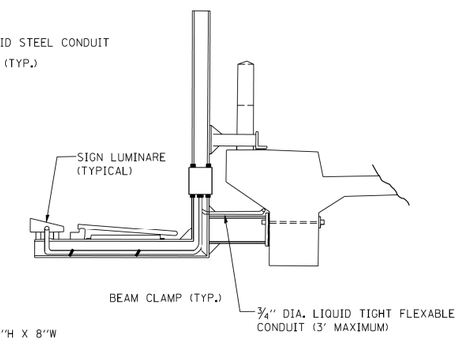

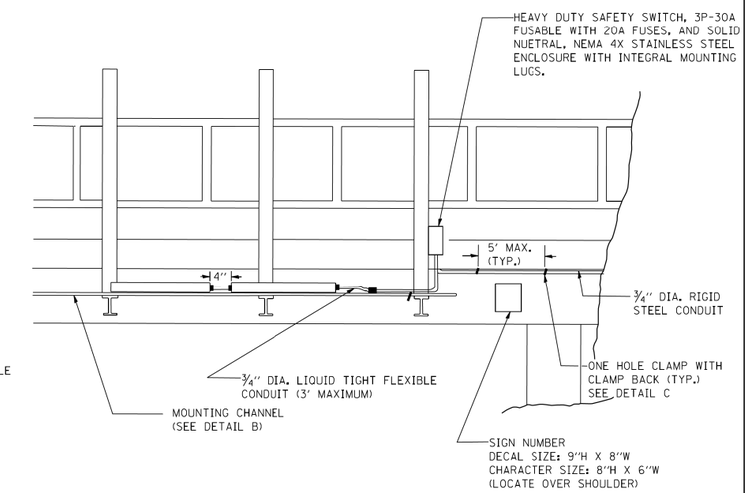

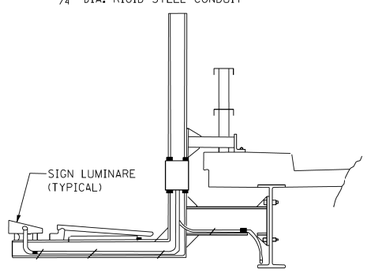

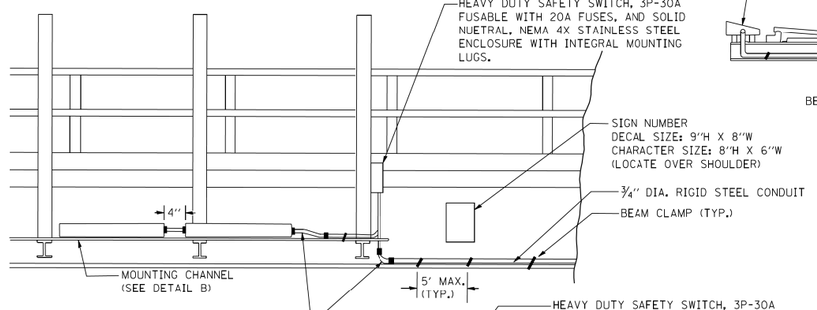

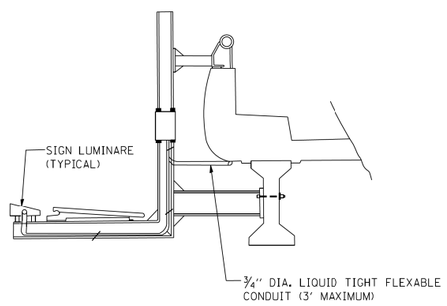

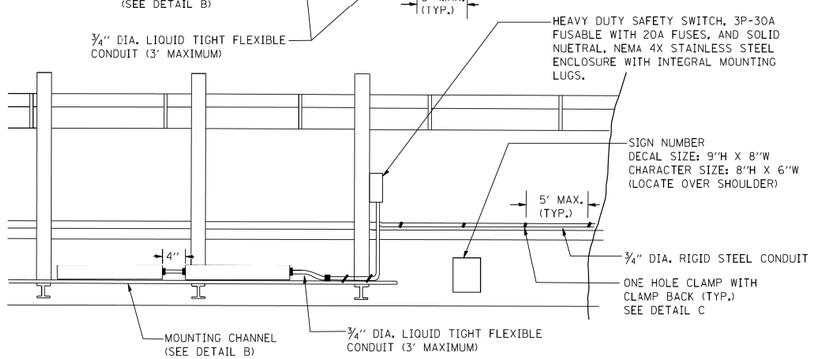

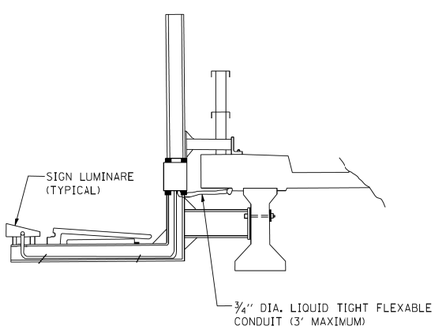

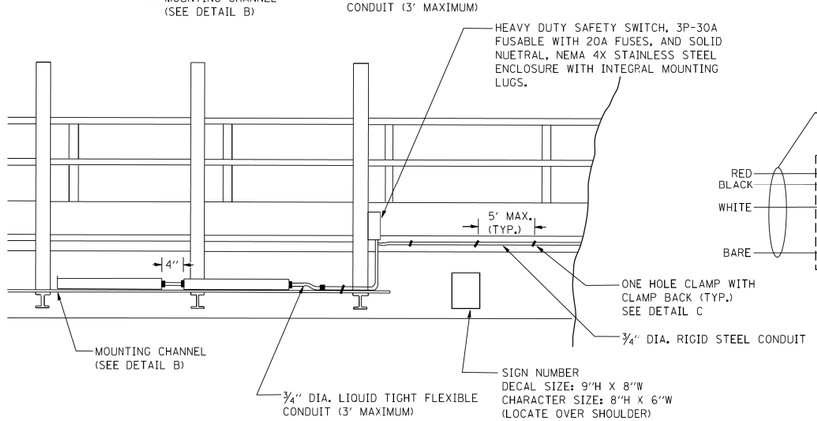

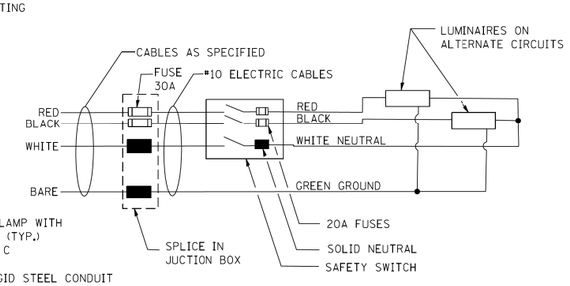

WIRING DIAGRAM

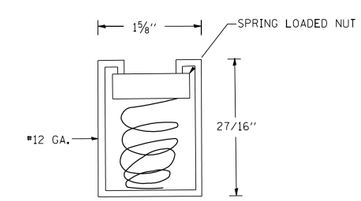

DETAIL B
CONTINUOUS-SLOT
MOUNTING CHANNEL
GALVINIZED STEEL

DETAIL C

FILE NAME = W:\diststd\22x34\be602.dgn	USER NAME = leysa	DESIGNED -	REVISED -	STATE OF ILLINOIS DEPARTMENT OF TRANSPORTATION	ELECTRIC CONNECTION TO SIGN STRUCTURE BRIDGE TYPE	F.A.I. RTE.	SECTION	COUNTY	TOTAL SHEETS / SHEET NO.
		DRAWN -	REVISED -			90/94	2012-0521	COOK	165 / 103
	PLOT SCALE = 50.0000 ' / IN.	CHECKED -	REVISED -				BE-602	CONTRACT NO. 60T93	
	PLOT DATE = 3/3/2010	DATE - 04-14-08	REVISED -		SCALE: NONE / SHEET NO. 1 OF 1 SHEETS / STA. TO STA.	FED. ROAD DIST. NO. 1	ILLINOIS	FED. AID PROJECT	

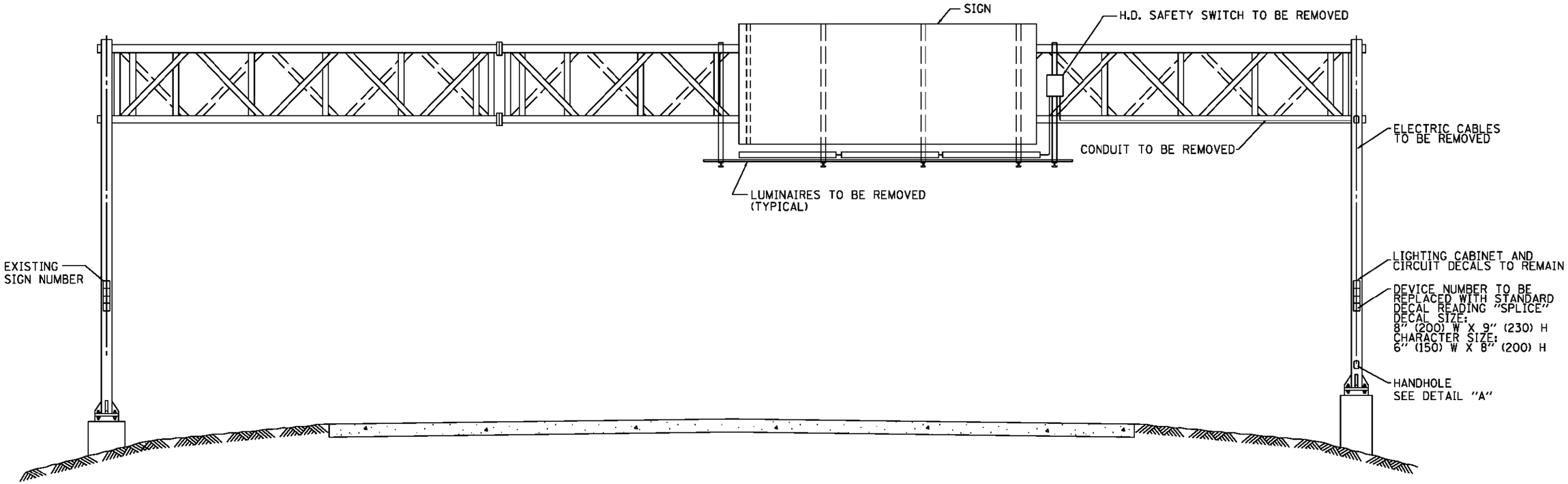

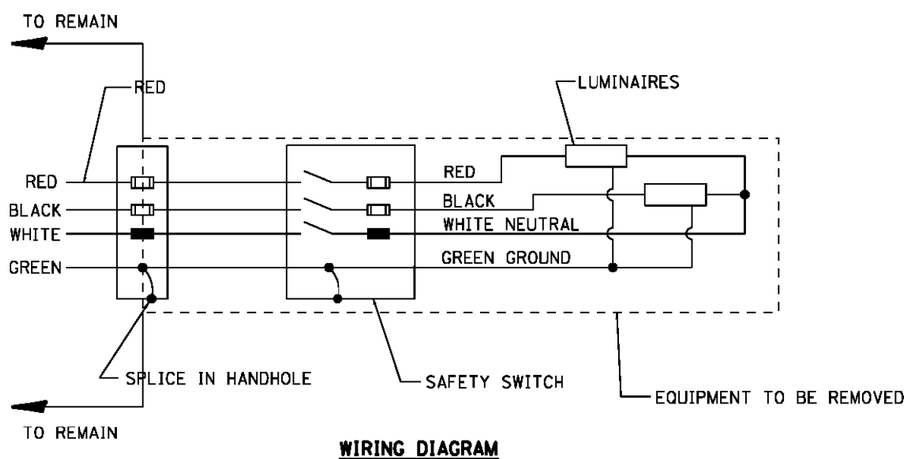

WIRING DIAGRAM

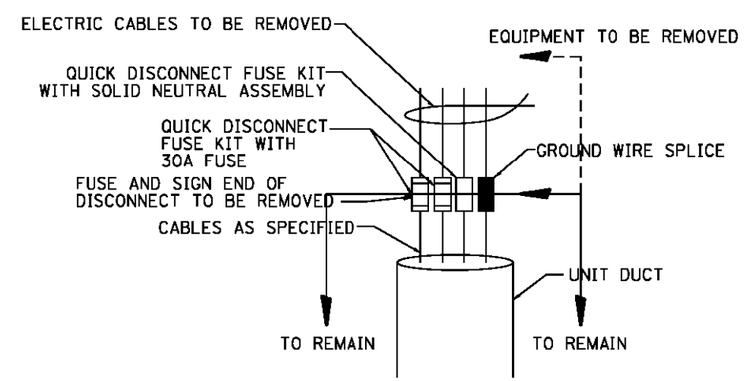

DETAIL A

WIRING MODIFICATIONS:

A) IF SIGN IS NOT A FED THRU;
1) REMOVE ALL WIRING FROM LOWER HANDHOLE OR JUNCTION BOX TO LUMINAIRES. (LOAD SIDE)
2) CAP LINE SIDE OF WIRES.

B) IF SIGN IS USED AS A MID CIRCUIT TAP;
1) REMOVE ALL WIRING FROM LOWER HANDHOLE OR JUNCTION BOX TO LUMINAIRES. (LOAD SIDE)
2) RESPLICE LINE SIDE CABLES TO MAINTAIN CIRCUIT CONTINUITY.

NOTE:

1. CONTRACTOR TO COORDINATE WITH IDOT ELECTRIC MAINTENANCE CONTRACTOR PRIOR TO PERFORMING ANY WORK.

FILE NAME = c:\pw_work\pwidot\maxag\d267541\be610.dgn	USER NAME = maxag	DESIGNED -	REVISED -	STATE OF ILLINOIS DEPARTMENT OF TRANSPORTATION	REMOVAL OF ELECTRICAL LIGHTING FROM SIGN STRUCTURE SHEET 1 OF 2 SPAN TYPE	F.A.I. RTE.	SECTION	COUNTY	TOTAL SHEETS	SHEET NO.
	PLOT SCALE = 100.0000 ' / in.	DRAWN -	REVISED -			90/94	2012-0521	COOK	165	104
	PLOT DATE = 10/10/2014	CHECKED -	REVISED -			BE-610		CONTRACT NO. 60T93		
		DATE - 08-20-13	REVISED -		SCALE: NONE / SHEET NO. 1 OF 2 SHEETS / STA. / TO STA.	FED. ROAD DIST. NO. 1	ILLINOIS	FED. AID PROJECT		

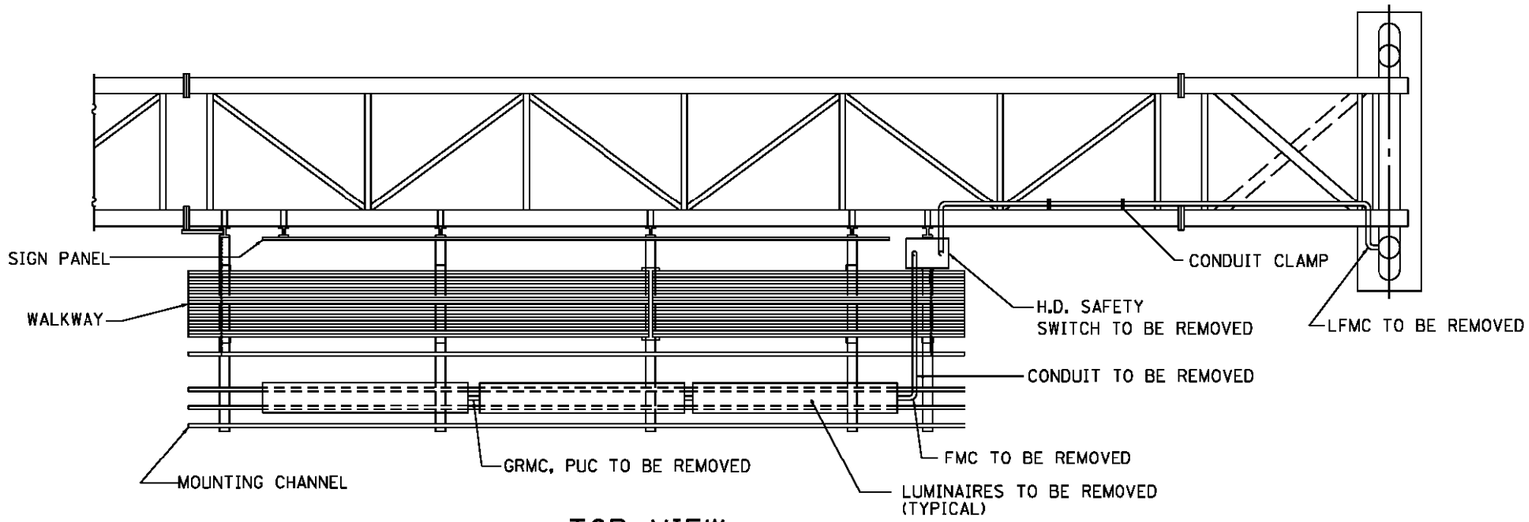

TOP VIEW

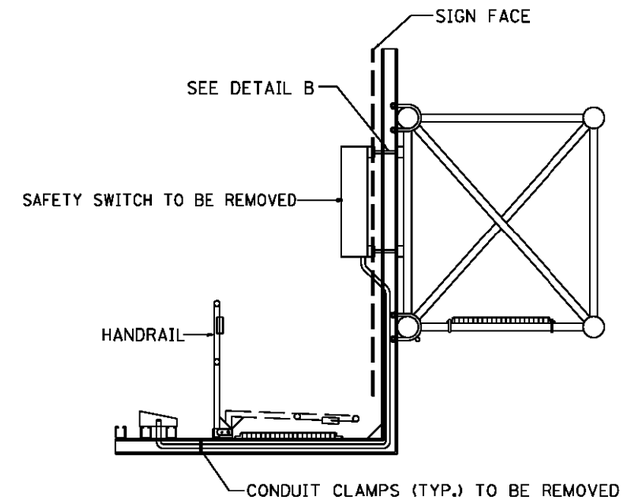

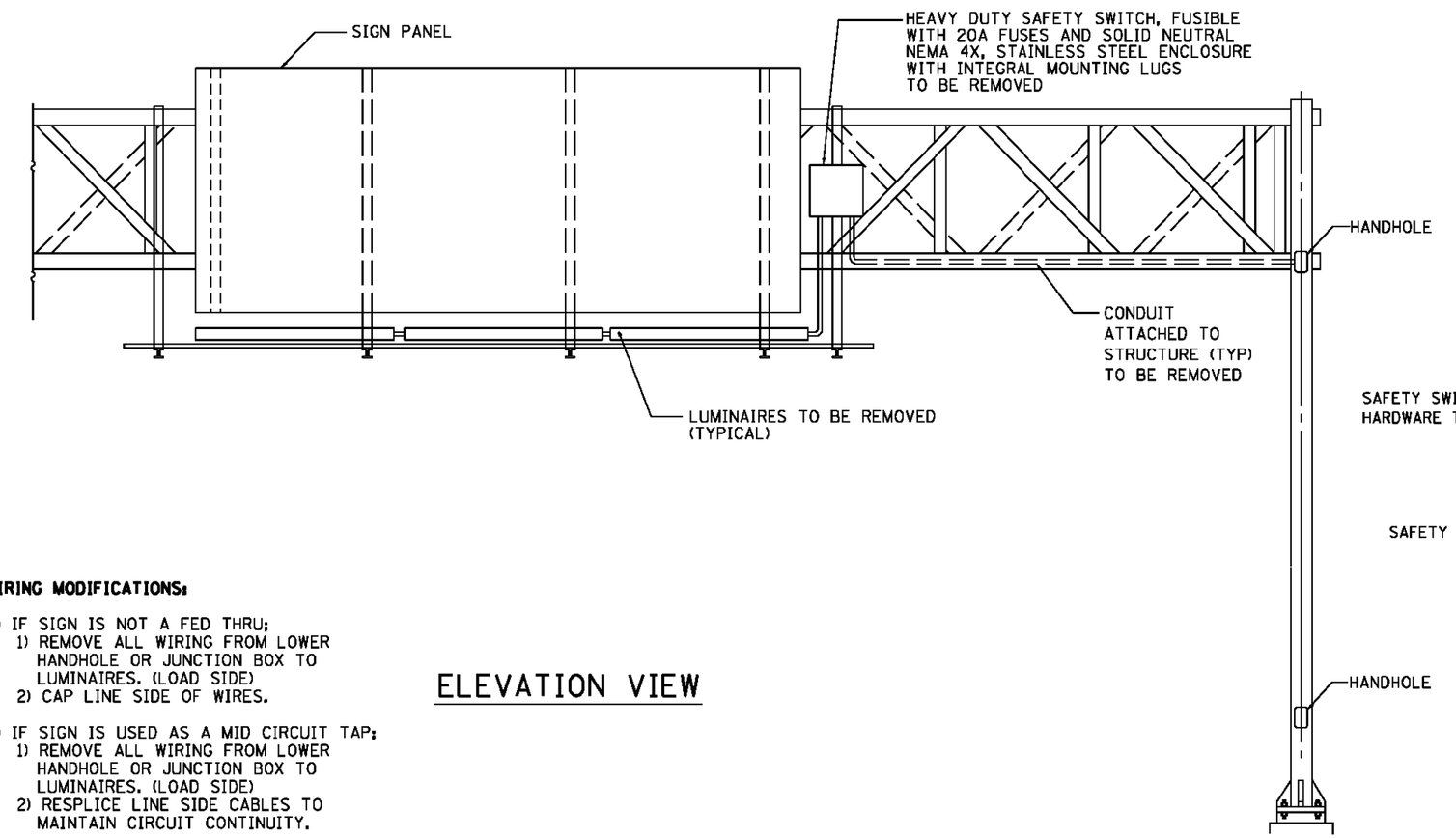

ELEVATION VIEW

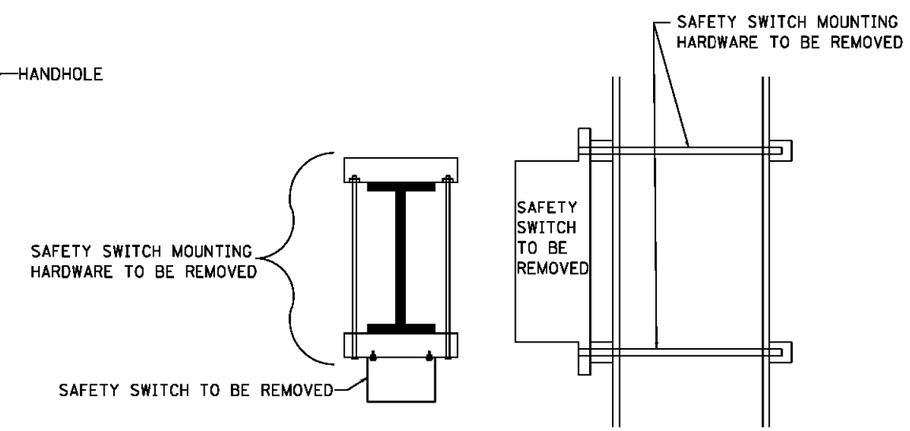

TOP VIEW SIDE VIEW

DETAIL B

WIRING MODIFICATIONS:

A) IF SIGN IS NOT A FED THRU;
1) REMOVE ALL WIRING FROM LOWER HANDHOLE OR JUNCTION BOX TO LUMINAIRES. (LOAD SIDE)
2) CAP LINE SIDE OF WIRES.

B) IF SIGN IS USED AS A MID CIRCUIT TAP;
1) REMOVE ALL WIRING FROM LOWER HANDHOLE OR JUNCTION BOX TO LUMINAIRES. (LOAD SIDE)
2) RESPLICE LINE SIDE CABLES TO MAINTAIN CIRCUIT CONTINUITY.

FILE NAME =	USER NAME = mazag	DESIGNED -	REVISED -	STATE OF ILLINOIS DEPARTMENT OF TRANSPORTATION	REMOVAL OF ELECTRICAL LIGHTING FROM SIGN STRUCTURE SHEET 2 OF 2 SPAN TYPE	F.A.I. RTE.	SECTION	COUNTY	TOTAL SHEETS	SHEET NO.
	PLOT SCALE = 100.0000 ' / in.	DRAWN -	REVISED -			90/94	2012-0521	COOK	165	105
	PLOT DATE = 10/10/2014	CHECKED -	REVISED -			BE-610		CONTRACT NO. 60T93		
		DATE - 08-20-13	REVISED -		SCALE: NONE / SHEET NO. 2 OF 2 SHEETS / STA. / TO STA.	FED. ROAD DIST. NO. 1	ILLINOIS	FED. AID PROJECT		

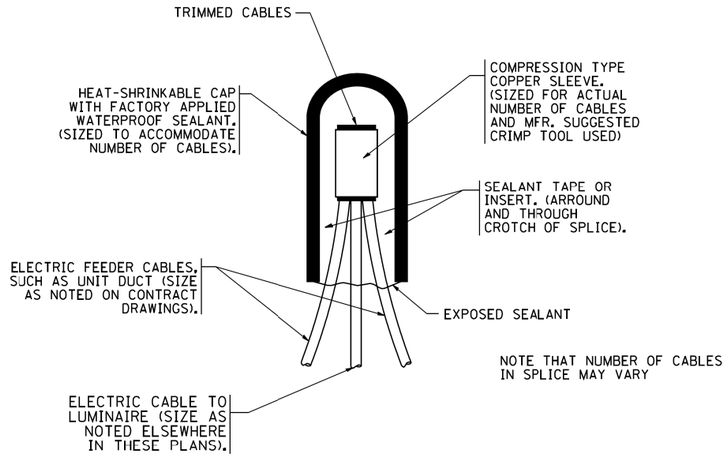

TYPICAL SPLICE DETAIL

N.T.S.

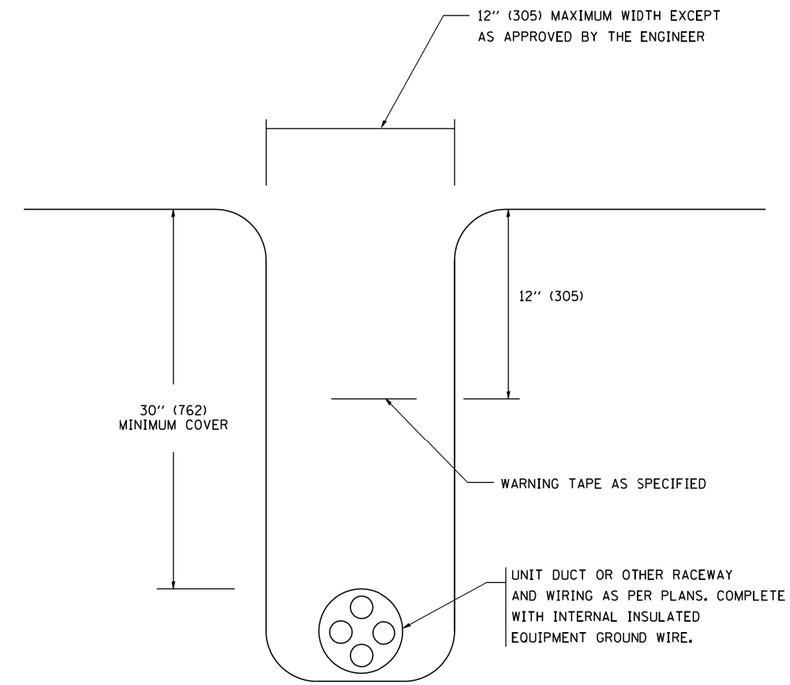

TYPICAL WIRING IN TRENCH DETAIL

N.T.S.

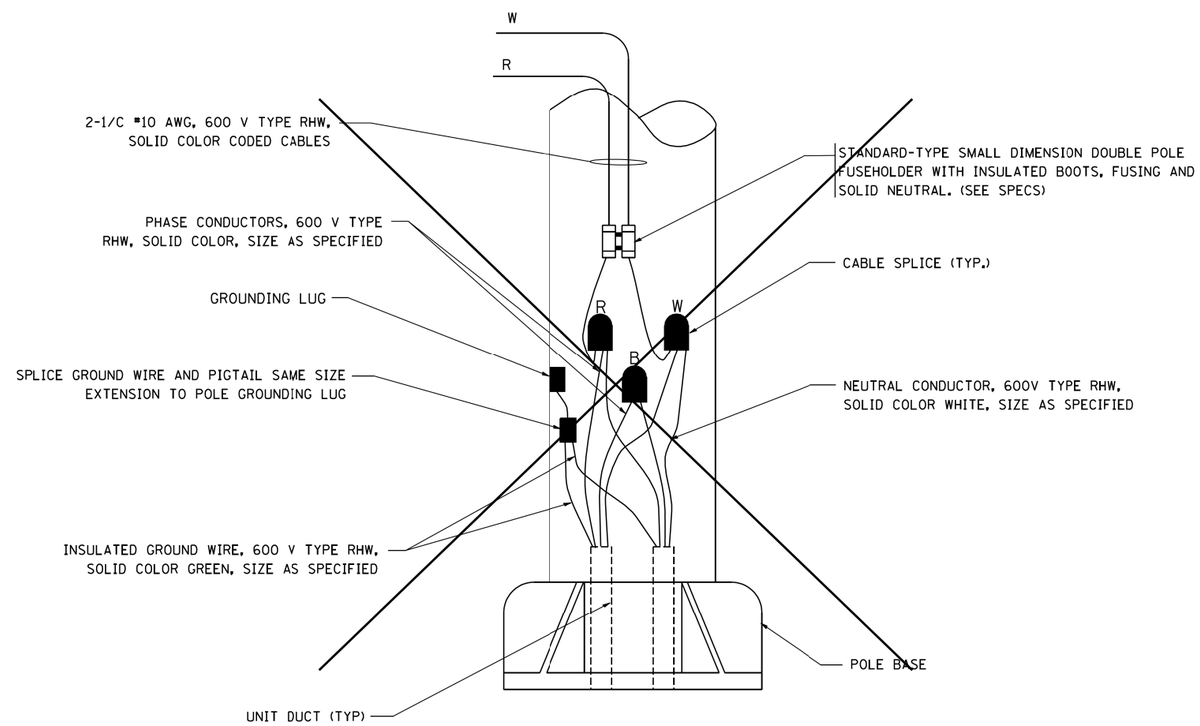

POLE WIRING DETAIL

N.T.S.

FILE NAME = W:\diststd\22x34\be702.dgn	USER NAME = gaglianobt	DESIGNED -	REVISED - 08-08-03	STATE OF ILLINOIS DEPARTMENT OF TRANSPORTATION	MISC. ELECTRICAL DETAILS SHEET A			F.A.I. RTE.	SECTION	COUNTY	TOTAL SHEETS / SHEET NO.
		DRAWN -	REVISED -					90/94	2012-0521	COOK	165 / 106
	PLOT SCALE = 50.000 ' / IN.	CHECKED -	REVISED -					BE-702		CONTRACT NO. 60T93	
	PLOT DATE = 1/4/2008	DATE -	REVISED -		SCALE: NONE	SHEET NO. 1 OF 1 SHEETS	STA. TO STA.	FED. ROAD DIST. NO. 1	ILLINOIS	FED. AID PROJECT	

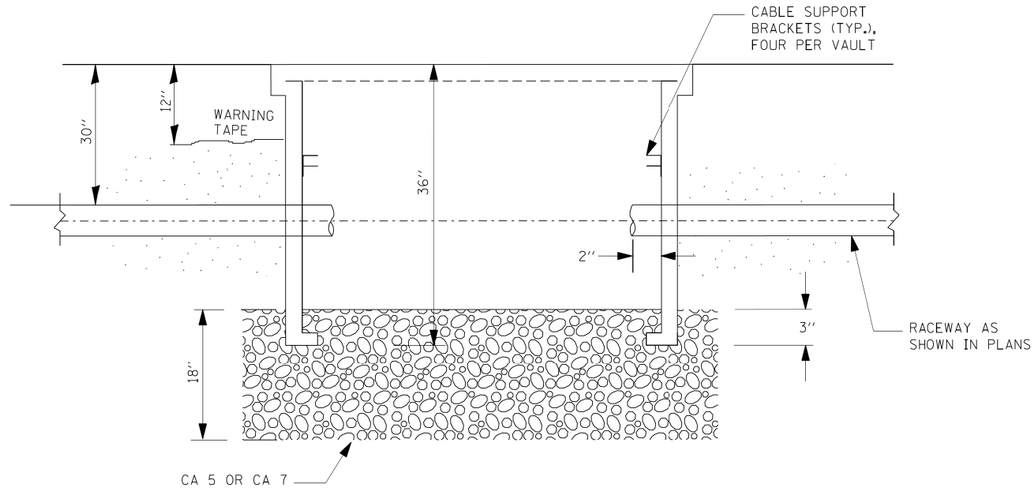

SECTION A-A

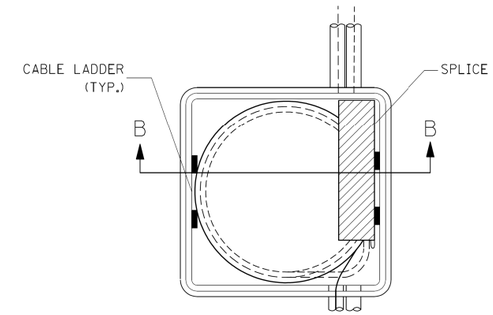

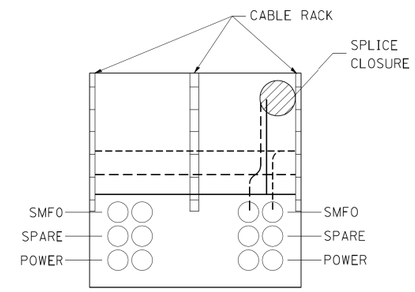

SECTION B-B

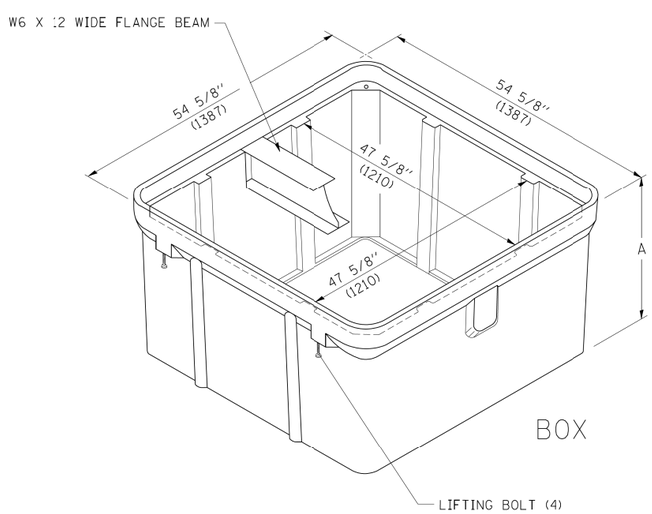

BOX

ISOMETRIC

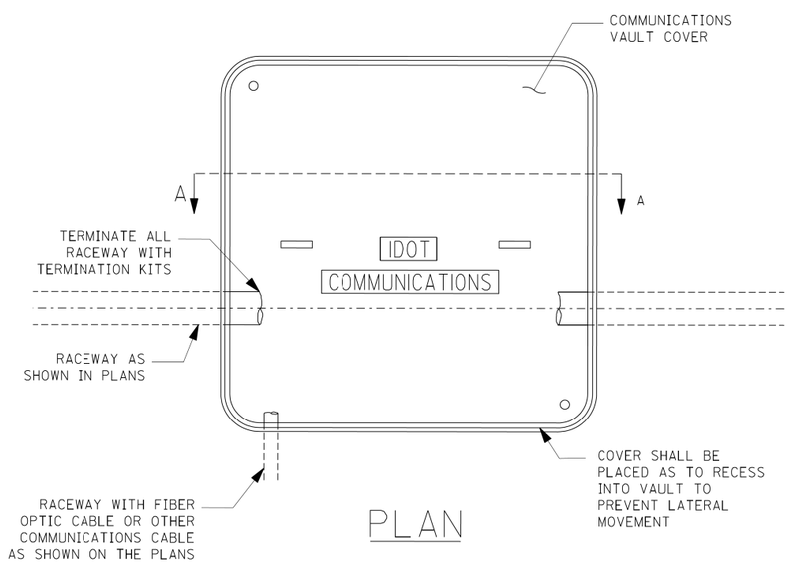

PLAN

NOTES:

1. BOX SHALL HAVE AN OPEN BASE.
2. COVER SHALL WITHSTAND A 22,500/33,750 DESIGN/TEST LOADING AND SHALL LOCK.
3. ALL OPENINGS IN STRUCTURE MUST BE MACHINED AT TIME OF FABRICATION OR PUNCH DRIVEN AT TIME OF PLACEMENT. IN ACCORDANCE WITH MANUFACTURER RECOMMENDATIONS.
4. FIELD PLACEMENT OF COMMUNICATIONS VAULT SHALL BE AS DIRECTED BY THE ENGINEER.
5. ALL DIMENSIONS ARE MINIMUM AND A LARGER SIZE HANDHOLE MAY BE USED, WITH THE APPROVAL OF THE ENGINEER, TO FACILITATE USING A MANUFACTURER'S STANDARD PRODUCT.

FILE NAME = c:\pw_work\PWIDOT\LEYSA\d0108315\be705.dgn	USER NAME = leysa	DESIGNED -	REVISED -	STATE OF ILLINOIS DEPARTMENT OF TRANSPORTATION	COMMUNICATIONS VAULT, COMPOSITE CONCRETE	F.A.I. RTE.	SECTION	COUNTY	TOTAL SHEETS	SHEET NO.
		DRAWN -	REVISED -			90/94	2012-0521	COOK	165	107
	PLOT SCALE = 50.0000 ' / IN.	CHECKED -	REVISED -			BE-705		CONTRACT NO. 60T93		
	PLOT DATE = 3/29/2010	DATE - 03-22-10	REVISED -		SCALE: NONE / SHEET NO. OF SHEETS / STA. TO STA.	FED. ROAD DIST. NO. 1	ILLINOIS	FED. AID PROJECT		

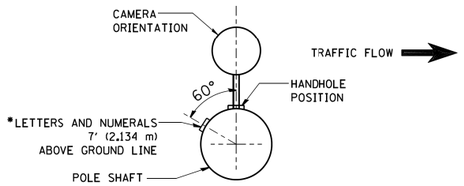

POSITION OF HANDHOLE AND CAMERA NUMBER FOR POLE MOUNTED ON BRIDGE PARAPET OR BARRIER WALL

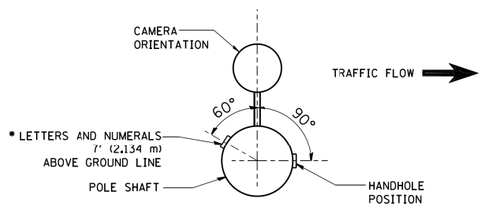

POSITION OF HANDHOLE AND CAMERA NUMBER

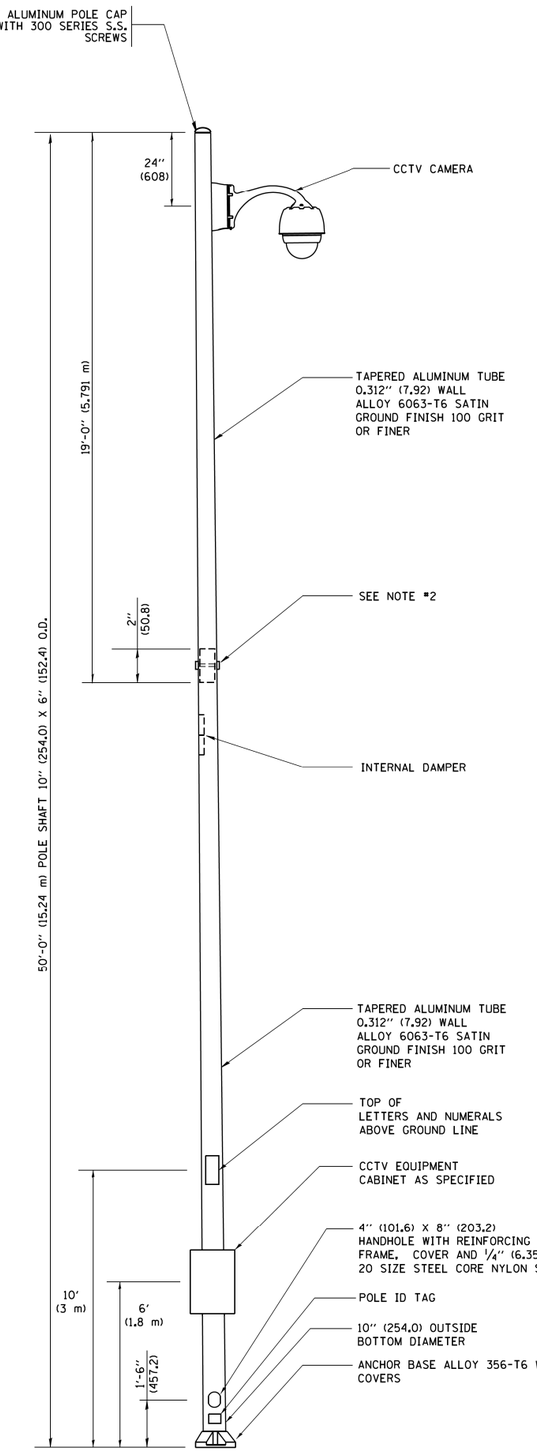

NOTES:

1. ALL DIMENSIONS ARE IN INCHES (MILLIMETERS) UNLESS OTHERWISE SHOWN.
2. TWO PIECE SHAFT WILL BE MATCHED MARKED AND INTERCHANGEABLE BETWEEN DIFFERENT UNITS. FIELD DRILLING OF THE HOLES WILL NOT BE ALLOWED.
3. THE POLE WILL MEET AASHTO DESIGN CRITERIA AS SPECIFIED.
4. THE INSTALLING CONTRACTOR WILL PROVIDE A UL LISTED GROUNDING CONNECTOR. BURNDY K2C23, T&B SP4DL OR APPROVED EQUAL.
5. POLES WILL BE INSTALLED IN ACCORDANCE TO MANUFACTURER'S INSTRUCTIONS.
6. POLES WILL BE SET PLUMB ON THE FOUNDATION WITHOUT THE USE OF LEVELING NUTS, WASHERS OR SHIMS.

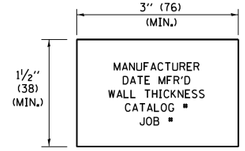

POLE ID TAG

NTS

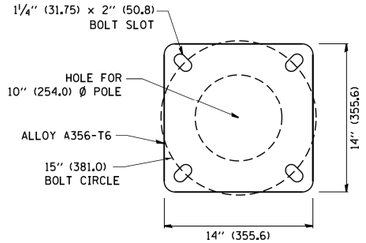

POLE BASE PLATE DETAIL

15 INCH (381.0) BOLT CIRCLE

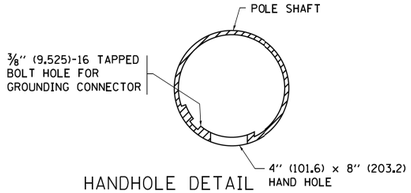

HANDHOLE DETAIL

(N.T.S.)

FILE NAME = c:\pw_work\pwidot\drivakosgn\d0108315\be1000.dgn	USER NAME = drivakosgn	DESIGNED -	REVISED - R. TOMSONS 09-06-00	STATE OF ILLINOIS DEPARTMENT OF TRANSPORTATION
		DRAWN -	REVISED - R. TOMSONS 09-03-03	
	PLOT SCALE = 50.000 ' / in.	CHECKED -	REVISED - R. TOMSONS 02-27-13	
	PLOT DATE = 6/5/2014	DATE -	REVISED - R. TOMSONS 05-04-14	

CCTV CAMERA STRUCTURE

50' (15.24 m) MOUNTING HEIGHT

SCALE: NONE | SHEET NO. 1 OF 1 SHEETS | STA. | TO STA.

F.A.I. RTE.	SECTION	COUNTY	TOTAL SHEETS	SHEET NO.
90/94	2012-0521	COOK	165	108
	BE-1000	CONTRACT NO. 60T93		
FED. ROAD DIST. NO. 1	ILLINOIS	FED. AID PROJECT		

be1000.dgn 6/5/2014 11:35:28 AM User=drivakosgn

CCTV CAMERA POLE FOUNDATION DEPTH TABLE

SOIL CONDITIONS	DESIGN DEPTH "D" OF FOUNDATION
SOFT CLAY Qu = 0.375 TON/SQ. FT.	13'-0" (3.96 m)
MEDIUM CLAY Qu = 0.75 TON/SQ.FT	9'-6" (2.09 m)
STIFF CLAY Qu = 1.50 TON/SQ. FT.	7'-0" (2.13 m)
LOOSE SAND Ø = 34°	9'-0" (2.74 m)
MEDIUM SAND Ø = 37.5°	8'-3" (2.52 m)
DENSE SAND Ø = 40°	7'-9" (2.36 m)

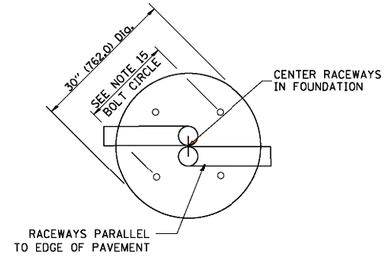

TOP VIEW

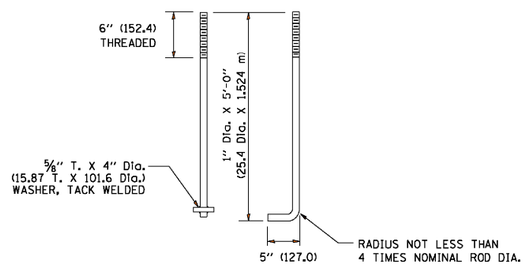

ANCHOR ROD DETAIL

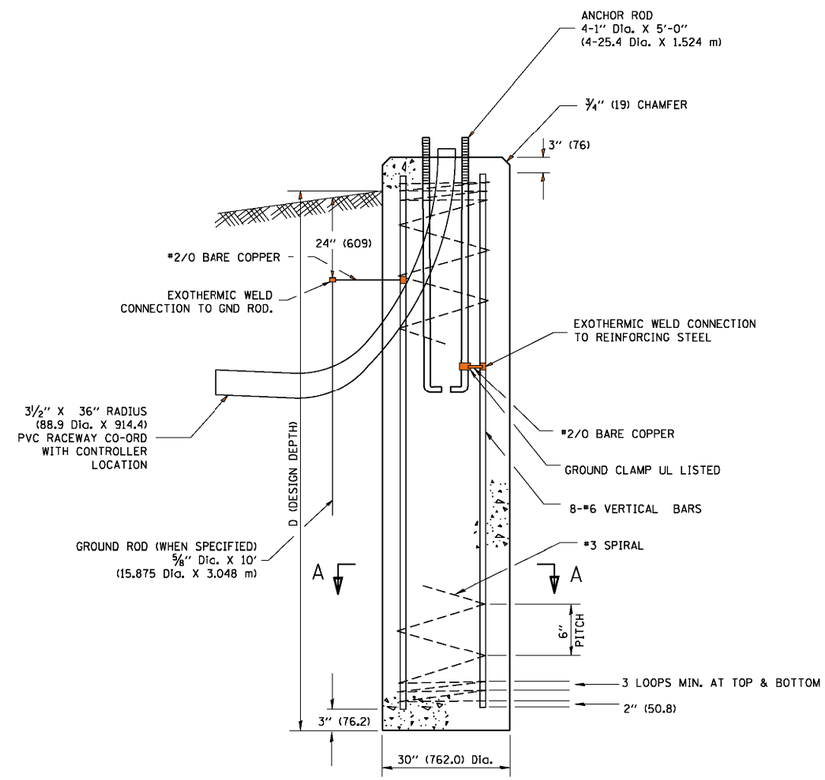

FOUNDATION DETAIL

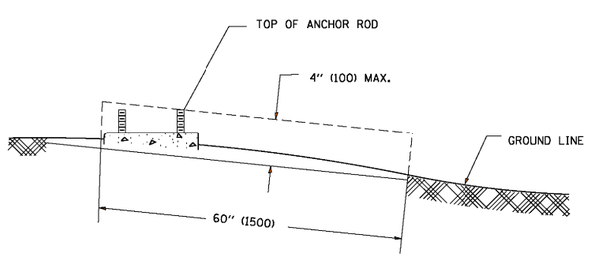

FOUNDATION EXTENSION DETAIL

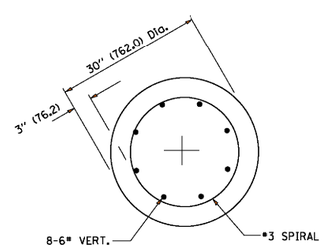

SECTION A-A

NOTES

1. ALL DIMENSIONS ARE IN INCHES (MILLIMETERS) UNLESS OTHERWISE SHOWN.
2. THE ANCHOR RODS AND RACEWAYS SHALL BE PROPERLY SECURED IN PLACE BEFORE THE CONCRETE IN PLACED.
3. THE FOUNDATION SHALL NOT PROTRUDE MORE THAN 100MM (4 IN.) ABOVE THE FINISHED GRADE WITHIN A 60 IN. (1.5 m) CHORD ACROSS THE FOUNDATION, WITH ANCHOR RODS INCLUDED, IN ACCORDANCE WITH AASHTO GUIDELINES. IF THE FOUNDATION HEIGHT, INCLUDING ANCHOR RODS, EXTENDS BEYOND THESE SPECIFIED LIMITS, THE FOUNDATION SHALL BE REPLACED AT THE CONTRACTOR'S EXPENSE. SEE FOUNDATION EXTENSION DETAIL.
4. THE HOLE FOR THE FOUNDATION SHALL BE MADE BY DRILLING WITH AN AUGER, OF THE SAME DIAMETER AS THE FOUNDATION. IF SOIL CONDITIONS REQUIRE THE USE OF A LINER TO FORM THE HOLE, THE LINER SHALL BE WITHDRAWN AS THE CONCRETE IS DEPOSITED.
5. THE TOP OF THE FOUNDATION SHALL BE CONSTRUCTED LEVEL. A LINER OR FORM SHALL BE USED TO PRODUCE A UNIFORM SMOOTH SIDE TO THE TOP OF THE FOUNDATION. FOUNDATION TOP SHALL BE CHAMFERED 3/4-IN. (20 mm).
6. THE CONCRETE SHALL BE CLASS SI. CONCRETE SHALL CURE ACCORDING TO ARTICLE 1020.13 BEFORE LIGHT POLES ARE INSTALLED.
7. THE ANCHOR ROD SHALL BE A HOOK ROD TYPE. COLD BENDING OF THE ANCHOR ROD WILL NOT BE ALLOWED. THE RADIUS OF THE HOOK BEND SHALL NOT BE LESS THAN 4 TIMES THE NOMINAL DIAMETER OF THE ANCHOR ROD. A TACK WELDED ANCHOR ROD MAY BE SUBSTITUTED WITH THE APPROVAL OF THE ENGINEER.
8. THE ANCHOR RODS SHALL BE ACCORDING TO ASTM F1554 GRADE 725 (GRADE 105). NUTS SHALL BE HEXAGON NUTS ACCORDING TO ASTM A 194 2H OR ASTM A 563 DH, AND WASHERS SHALL BE ACCORDING TO ASTM F 436.
9. ANCHOR RODS, NUTS AND WASHERS SHALL BE COMPLETELY GALVANIZED BY EITHER THE HOT-DIPPED PROCESS CONFORMING WITH AASHTO M 232. THE MECHANICAL PLATING METHOD CONFORMING TO AASHTO M 298, CLASS 50 WITH A MAXIMUM COATING THICKNESS OF 150 UM(6 MILS) OR THE ELECTROLYTIC PROCESS ACCORDING TO ASTM F 1136.
10. THE ANCHOR RODS SHALL BE THREADED A MINIMUM OF 6 INCHES (150 mm) WITH A MINIMUM OF 3 INCHES (75 mm) OF THREADED ANCHOR ROD EMBEDDED IN THE FOUNDATION.
11. ANCHOR RODS SHALL PROJECT 2 3/4" (69.9 mm) ABOVE THE TOP OF THE FOUNDATION. IF BREAKAWAY COUPLINGS ARE SPECIFIED, THE CONTRACTOR SHALL CAREFULLY COORDINATE THE ANCHOR ROD PROJECTION WITH THE INSTALLATION REQUIREMENTS OF THE BREAKAWAY COUPLINGS.
12. THE CONTRACTOR SHALL USE A #3 SPIRAL AT 6" (152.4 mm) PITCH OR MAY SUBSTITUTE #3 TIES AT 12" (304.8 mm) O.C. WITH THE APPROVAL OF THE ENGINEER.
13. THE CABLE TRENCHES AND FOUNDATION SHALL BE BACK FILLED AND COMPACTED AS SPECIFIED BEFORE THE LIGHT POLE IS ERECTED.
14. THE RACEWAYS SHALL PROJECT 1" (25.4 mm) ABOVE THE TOP OF THE FOUNDATION.
15. ANCHOR ROD BOLT CIRCLE TO BE COORDINATED WITH CAMERA STRUCTURE

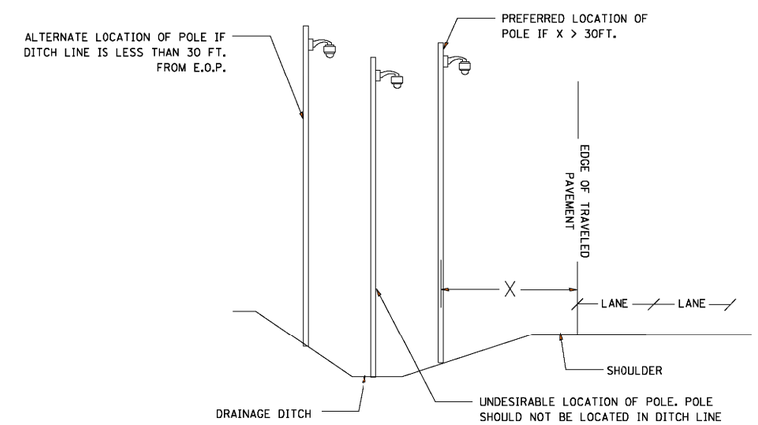

CAMERA POLE PLACEMENT

FILE NAME = c:\pw_work\pwidot\footemj\d0108315\be1001.dgn	USER NAME = footemj	DESIGNED - TOMSONS	REVISED -
		DRAWN -	REVISED -
	PLOT SCALE = 50.0001 ' / in.	CHECKED -	REVISED -
	PLOT DATE = 4/3/2013	DATE - 03-11-13	REVISED -

STATE OF ILLINOIS
DEPARTMENT OF TRANSPORTATION

CCTV CAMERA STRUCTURE FOUNDATION
50' (15 - 24m) MOUNTING HEIGHT

SCALE: NONE | SHEET NO. 1 OF 1 SHEETS | STA. | TO STA.

F.A.I. RTE.	SECTION	COUNTY	TOTAL SHEETS	SHEET NO.
90/94	2012-0521	COOK	165	109
	BE-1001	CONTRACT NO. 60T93		
FED. ROAD DIST. NO. 1	ILLINOIS	FED. AID PROJECT		

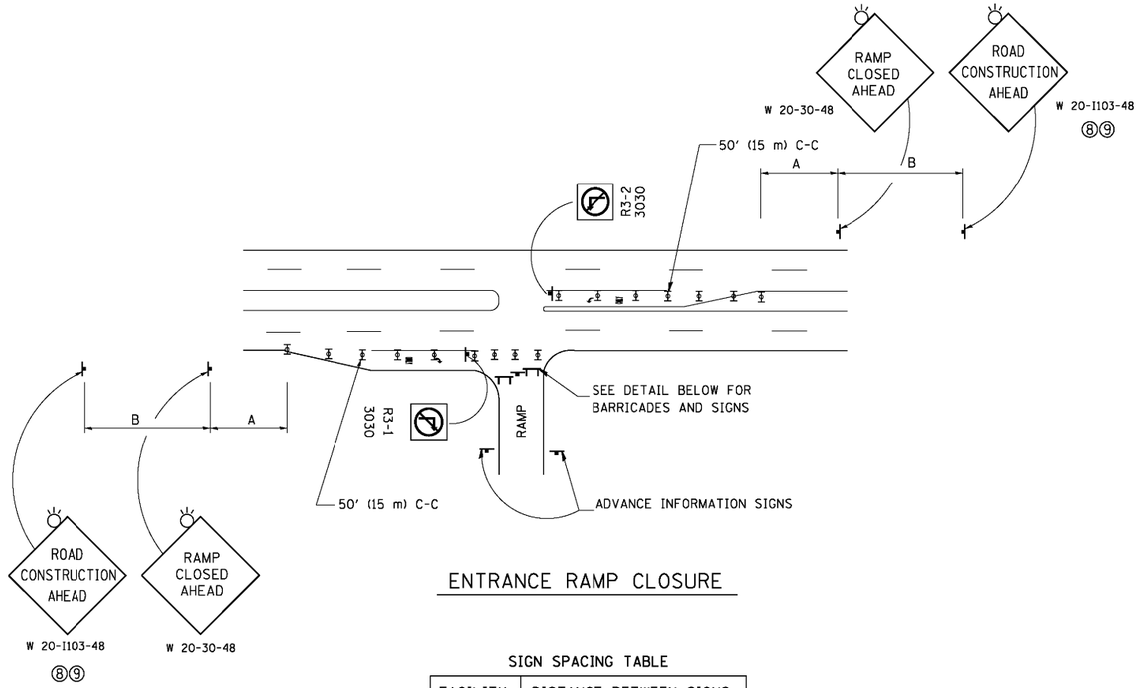

ENTRANCE RAMP CLOSURE

SIGN SPACING TABLE

FACILITY	DISTANCE BETWEEN SIGNS A	DISTANCE BETWEEN SIGNS B
EXPRESSWAY >24 HOURS	1000' (300 m)	1500' (450 m)
EXPRESSWAY ≤24 HOURS	500' (150 m)	500' (150 m)
ARTERIAL 55 MPH	500' (150 m)	500' (150 m)
ARTERIAL 50-45 MPH	350' (100 m)	350' (100 m)
ARTERIAL <45 MPH	200' (60 m)	200' (60 m)

DISTANCES MAY BE SHORTENED DEPENDING UPON THE PROXIMITY OF ADJACENT RAMPS OR INTERSECTIONS.

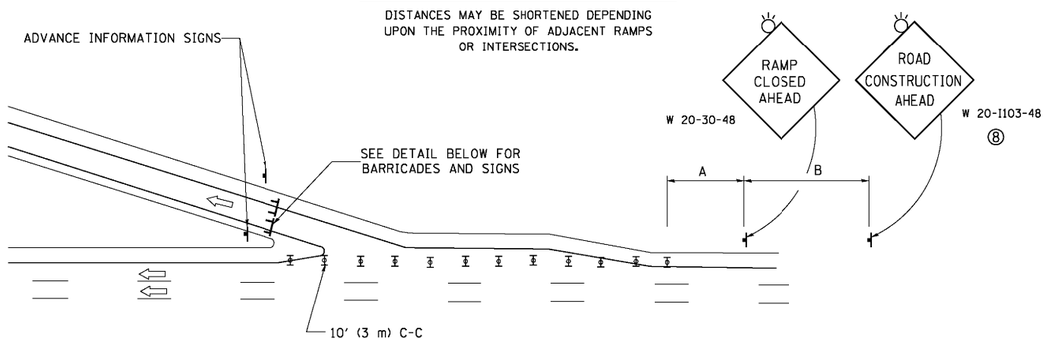

EXIT RAMP CLOSURE

SYMBOLS

TYPE II BARRICADE OR DRUM WITH STEADY BURN MONO-DIRECTIONAL LIGHT

TYPE III BARRICADE WITH 2 FLASHING LIGHTS

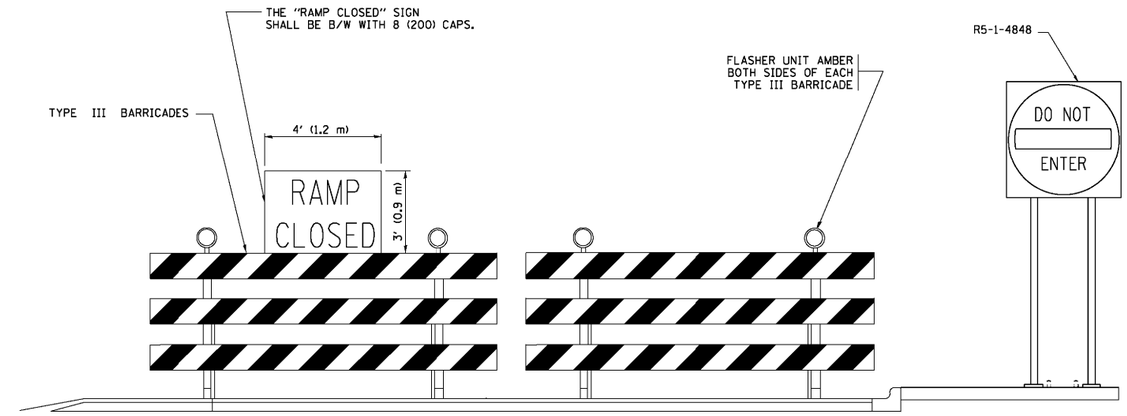

DETAIL FOR REQUIRED BARRICADES & SIGNS

RAMP CLOSURE ADVANCE WARNING SIGN

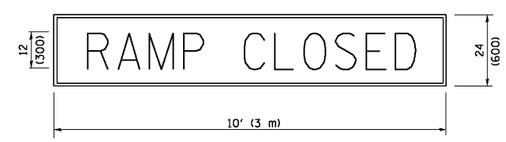

BLACK LEGEND ON ORANGE BACKGROUND MOUNTED DIAGONALLY
E MOD FONT
1 (25) BORDER

THESE SIGNS ARE REQUIRED ON ALL THE EXIT GUIDE SIGNS FOR EXIT RAMPS THAT WILL BE CLOSED FOR MORE THAN FOUR (4) CONSECUTIVE DAYS.

RAMP CLOSURE ADVANCE INFORMATION SIGN

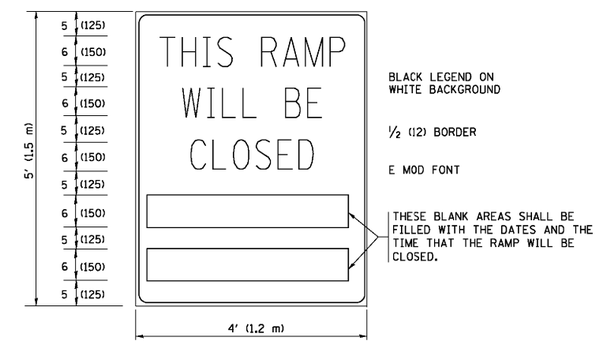

THESE SIGNS ARE REQUIRED ON BOTH SIDES OF THE RAMP, MINIMUM OF 1 WEEK IN ADVANCE OF THE CLOSURE.

THESE SIGNS SHALL BE FABRICATED AND PAID FOR ACCORDING TO THE TEMPORARY INFORMATION SIGNING SPECIAL PROVISION

GENERAL NOTES:

1. CONES MAY BE SUBSTITUTED FOR DRUMS OR TYPE II BARRICADES DURING DAY OPERATIONS. CONES SHALL BE A MINIMUM OF 28 (700) HIGH.
2. STEADY BURN LIGHTS WILL NOT BE REQUIRED FOR DAY OPERATIONS.
3. A FLAGGER SHALL BE POSITIONED AT EACH CLOSED RAMP THAT IS OPEN TO CONSTRUCTION VEHICLES, PRECEEDED BY A W20-7 FLAGGER WARNING SIGN.
4. ALL ROUTE MARKERS AND TRAILBLAZER ASSEMBLIES WHICH DIRECT MOTORISTS TO A CLOSED ENTRANCE RAMP SHALL BE COVERED WHEN THE RAMP IS CLOSED FOR MORE THAN FOUR (4) DAYS.
5. THE SIGNING AND BARRICADING WHICH IS REQUIRED BY THIS DETAIL SHALL BE INCLUDED IN THE COST OF TRAFFIC CONTROL AND PROTECTION (EXPRESSWAYS).
6. AUTHORIZATION FROM THE DISTRICT'S BUREAU OF TRAFFIC IS REQUIRED FOR ALL RAMP CLOSURES.
7. THE RAMP CLOSURE ADVANCE INFORMATION SIGNS SHALL BE ERECTED IF THE CLOSURE TIME EXCEEDS TWENTY-FOUR (24) HOURS. ADDITIONAL ADVANCE WARNING SIGNS ON EXIT GUIDE SIGNING WILL BE REQUIRED FOR EXIT RAMP CLOSURES THAT EXCEED FOUR (4) DAYS IN LENGTH
8. ROAD CONSTRUCTION AHEAD SIGNS MAY BE OMITTED WHEN THIS DETAIL IS USED IN CONJUNCTION WITH OTHER TRAFFIC CONTROL THAT ALREADY INCLUDES A ROAD CONSTRUCTION AHEAD SIGN.
9. ARTERIAL ROAD CONSTRUCTION AHEAD SIGNS SHALL BE INSTALLED ON THE LEFT SIDE OF TRAFFIC IF THE MEDIAN IS MORE THAN 10 FT WIDE.

ALL DIMENSIONS ARE IN INCHES (MILLIMETERS) UNLESS OTHERWISE SHOWN.

FILE NAME = c:\pw_work\pwidot\footemj\d0108315\tc08.dgn	USER NAME = footemj	DESIGNED - DWS	REVISED - JAF 02-06	STATE OF ILLINOIS DEPARTMENT OF TRANSPORTATION
		DRAWN -	REVISED - SPB 01-07	
	PLOT SCALE = 50.000 ' / in.	CHECKED -	REVISED - SPB 12-09	
	PLOT DATE = 7/8/2013	DATE - 02-83	REVISED - MD 06-13	

ENTRANCE AND EXIT RAMP CLOSURE DETAILS

SCALE: NONE | SHEET NO. 1 OF 1 SHEETS | STA. | TO STA.

F.A.I. RTE.	SECTION	COUNTY	TOTAL SHEETS	SHEET NO.
90/94	2012-0521	COOK	165	110
	TC-08	CONTRACT NO. 60T93		

FED. ROAD DIST. NO. 1 | ILLINOIS | FED. AID PROJECT

SINGLE LANE WEAVE

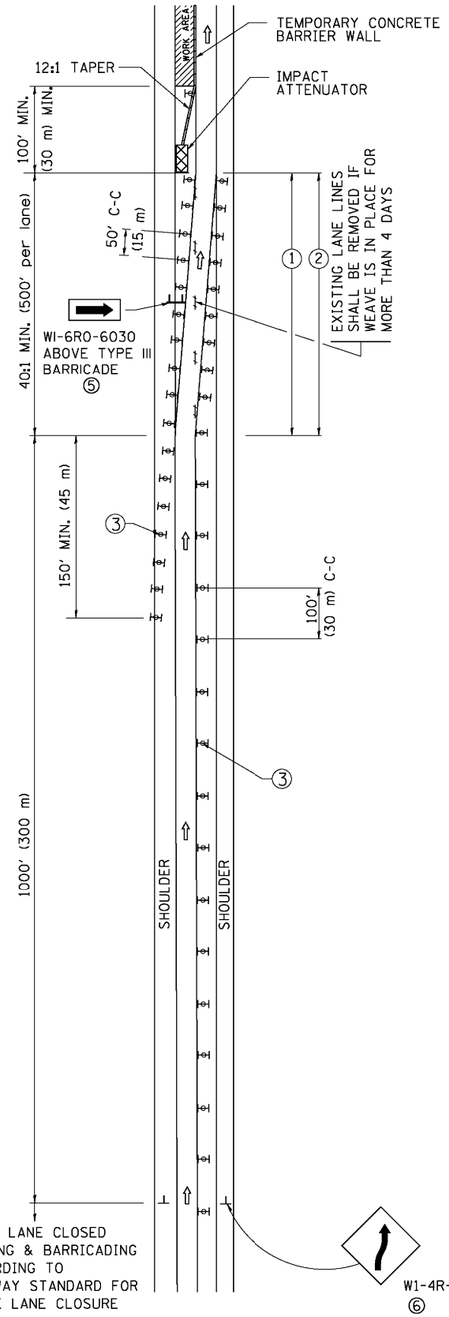

MULTI-LANE WEAVE

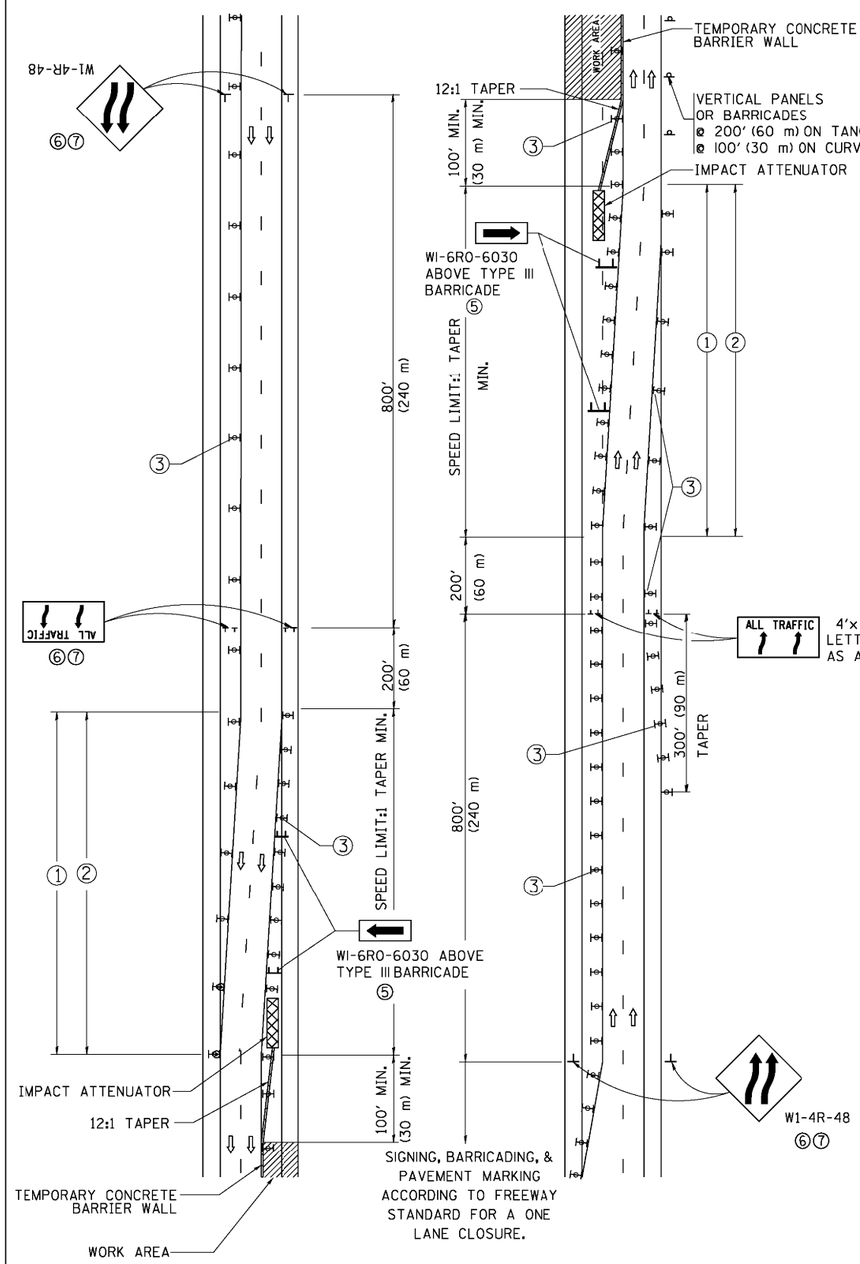

GENERAL NOTES

1. EXISTING CONFLICTING PAVEMENT MARKING LINES SHALL BE REMOVED. PAVEMENT MARKING REMOVAL SHALL NOT BE REQUIRED FOR SINGLE LANE WEAVES UNDER 4 DAYS IN DURATION.
2. CONTINOUS REFLECTIVE TEMPORARY PAVEMENT MARKING TAPE SHALL BE PLACED THROUGHOUT THE TAPER AND FOR 300' (90 m) ALONG SIDE THE WORK AREA WHERE THE CLOSURE TIME IS GREATER THAN FOURTEEN DAYS. THE LEFT EDGE LINE SHALL BE YELLOW AND THE RIGHT EDGE LINE SHALL BE WHITE. FOR MULTI-LANE WEAVES LANE LINES SHALL BE 5 INCH, 10'-30' (3 m-9 m) SKIP DASH, WHITE.
3. PLASTIC DRUMS WITH STEADY BURN LIGHTS AT 50' (15 m) C-C SPACING IN TAPERS AND 100' (30 m) C-C SPACING IN TANGENTS.
4. ALL SIGNS SHALL BE POST MOUNTED IF THE CLOSURE TIME EXCEEDS FOUR DAYS.
5. TYPE III BARRICADES MAY BE OMMITTED FOR SINGLE-LANE WEAVES UNDER 24-HOURS IN DURATION. W1-6 SIGNS WILL STILL BE REQUIRED. IF THE WIDTH OF OFFSET IS LESS THAN 6' THEN THE TYPE III BARRICADE WITH ATTACHED ARROW SIGN PANEL CAN BE ELIMINATED IN THE TAPER AREAS.
6. WHEN THE LENGTH OF THE SHIFTED SEGMENT (DISTANCE BETWEEN WEAVE POINTS) IS LESS THAN 1500', DOUBLE REVERSE CURVE SIGNS (W24-1) SHOULD BE USED INSTEAD OF THE REVERSE CURVE (W1-4) SIGNS. ARROWS ON THE 4'X8' "ALL TRAFFIC" SIGNS SHALL BE THE SAME SHAPE.
7. THE NUMBER OF ARROWS ON THESE SIGNS SHALL MATCH THE NUMBER OF LANES OPEN TO TRAFFIC.

SYMBOLS

- DIRECTION OF TRAFFIC
- WORK AREA
- SIGN ON PORTABLE OR PERMANENT SUPPORT
- TYPE II BARRICADE OR DRUM WITH MONO-DIRECTIONAL STEADY BURNING LIGHT
- TEMPORARY CONCRETE BARRIER WALL
- IMPACT ATTENUATOR
- W24-1-48

ALL DIMENSIONS ARE IN INCHES (MILLIMETERS) UNLESS OTHERWISE SHOWN

FILE NAME = c:\pw_work\pwidot\footemj\d0108315\tc09.dgn	USER NAME = footemj	DESIGNED - DWS	REVISED - JAF 02-06	STATE OF ILLINOIS DEPARTMENT OF TRANSPORTATION	TRAFFIC CONTROL DETAILS FOR FREEWAY SINGLE & MULTI-LANE WEAVE	F.A.I. RTE.	SECTION	COUNTY	TOTAL SHEETS / SHEET NO.
	PLOT SCALE = 50.000 ' / in.	DRAWN -	REVISED - SPB 01-07			90/94	2012-0521	COOK	165 / 111
	PLOT DATE = 7/1/2013	CHECKED -	REVISED - SPB 12-09				TC-09	CONTRACT NO. 60T93	
		DATE - 02-87	REVISED - MD 06-13		SCALE: NONE / SHEET NO. 1 OF 1 SHEETS / STA. TO STA.	FED. ROAD DIST. NO. 1	ILLINOIS	FED. AID PROJECT	

PARTIAL RAMP CLOSURE DETAILS

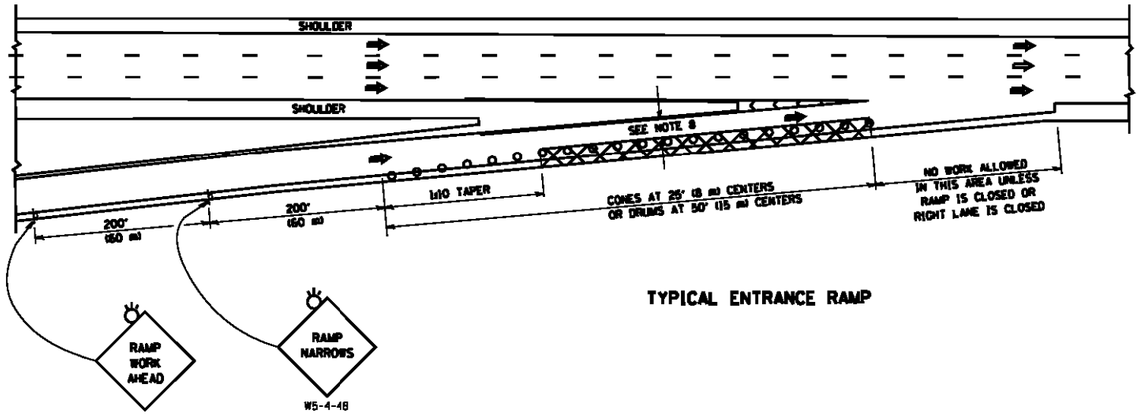

TYPICAL ENTRANCE RAMP

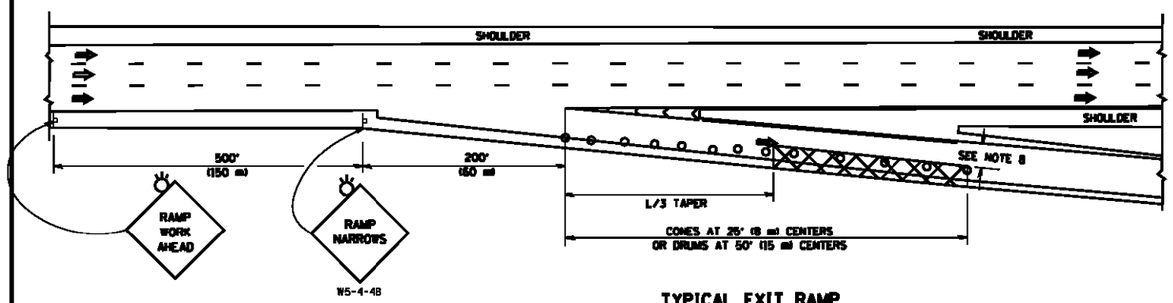

TYPICAL EXIT RAMP

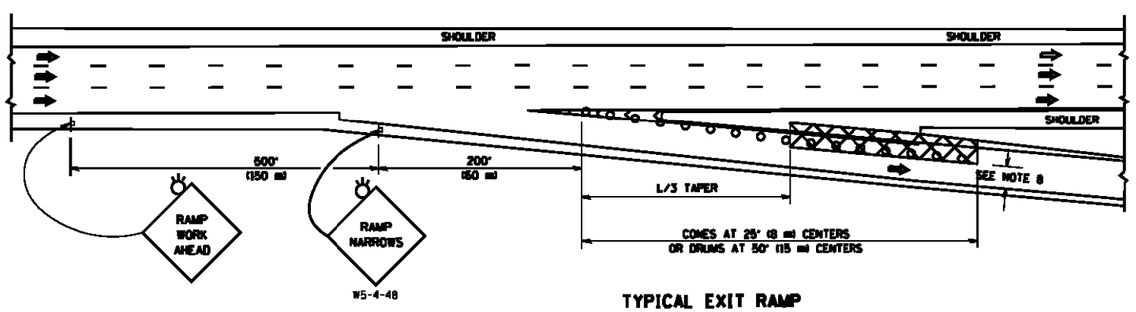

TYPICAL EXIT RAMP

SHOULDER CLOSURE DETAILS

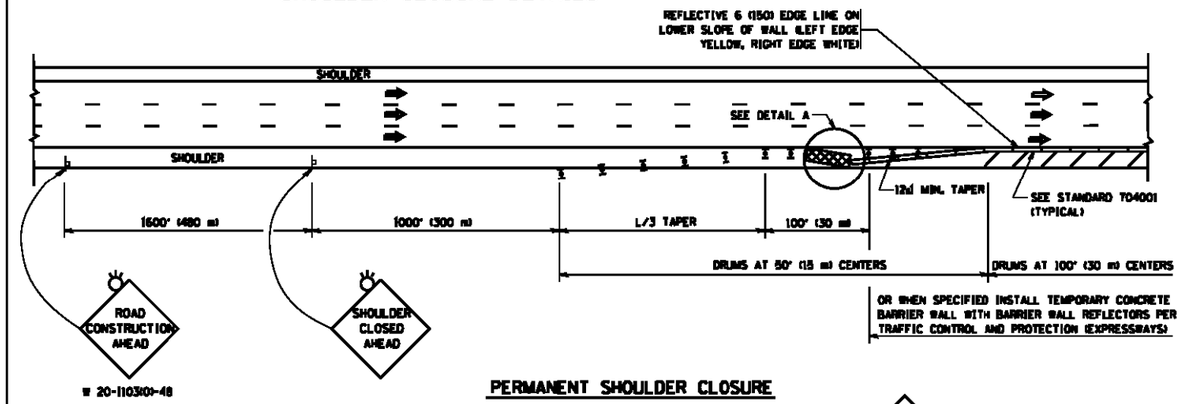

PERMANENT SHOULDER CLOSURE

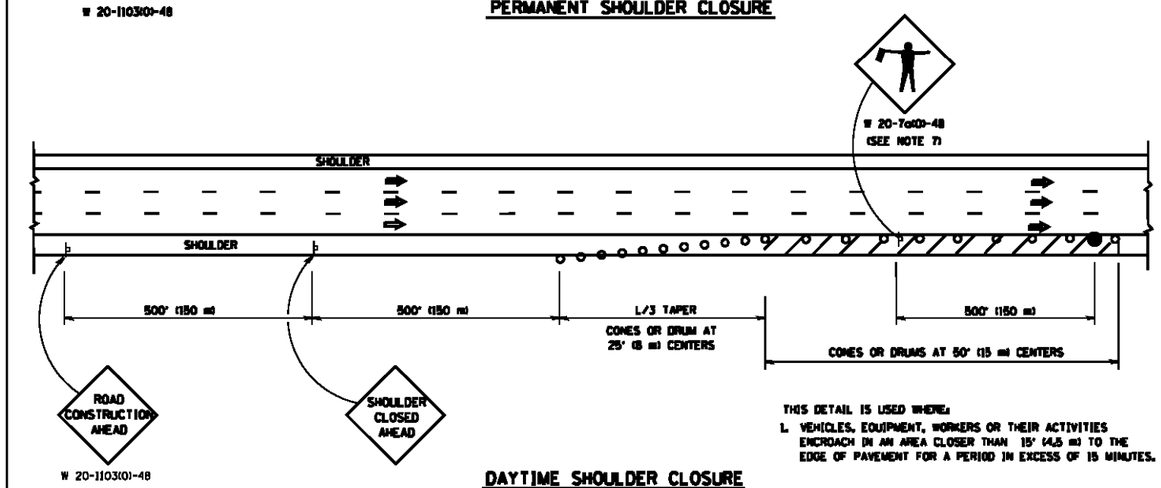

THIS DETAIL IS USED WHERE:

1. VEHICLES, EQUIPMENT, WORKERS OR THEIR ACTIVITIES ENCROACH IN AN AREA CLOSER THAN 15' (4.5 m) TO THE EDGE OF PAVEMENT FOR A PERIOD IN EXCESS OF 15 MINUTES.

DAYTIME SHOULDER CLOSURE

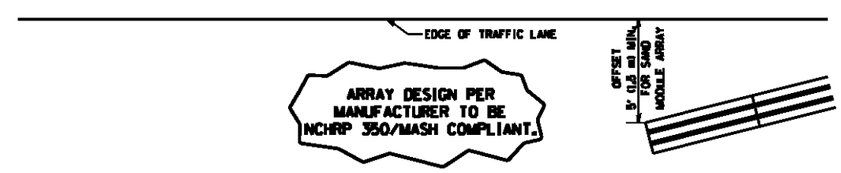

DETAIL "A"
IMPACT ATTENTUATOR, TEMPORARY
(SEE NOTE 5)

SYMBOLS

- ACTIVE WORK AREA
- SIGN ON PORTABLE OR PERMANENT SUPPORT
- FLAGGER WITH CONTROL SIGN
- TYPE II BARRICADE OR DRUM WITH STEADY BURN MONO-DIRECTIONAL LIGHT
- CONE, DRUM OR BARRICADE
- IMPACT ATTENUATOR OF TYPE AND TEST LEVEL SPECIFIED

GENERAL NOTES

1. THE "L" DISTANCE EQUALS:

SPEED LIMIT	FORMULAS	
45 mph (80 km/h) OR GREATER:	METRIC L=0.6(W)(S)	ENGLISH L=(W)(S)

W = WIDTH OF OFFSET IN FEET (METERS)
S = NORMAL POSTED SPEED MPH (KM/H)

2. PLASTIC DRUMS WITH HIGH PERFORMANCE REFLECTIVE SHEETING AND STEADY BURNING LIGHTS ARE REQUIRED FOR ALL NIGHTIME CLOSURES.
3. ALL SIGNS SHALL BE POST MOUNTED IF THE CLOSURE TIME EXCEEDS FOUR DAYS.
4. FLASHING LIGHTS SHALL BE USED DURING THE HOURS OF DARKNESS AND SHALL BE INSTALLED ABOVE THE FIRST TWO SETS OF SIGNS.
5. THE IMPACT ATTENTUATOR, TEMPORARY IS NOT REQUIRED WHEN THE TEMPORARY CONCRETE BARRIER WALL IS PROTECTED BY OR IS TIED INTO THE EXISTING GUARDRAIL. IF OFFSET IS LESS THAN 5 FEET USE NARROW USE TYPE DEVICE TO MEET NCHRP350/MASH.
6. AUTHORIZATION FROM THE DISTRICT'S BUREAU OF TRAFFIC IS REQUIRED FOR ALL FREEWAY CLOSURES.
7. THE FLAGGER AND FLAGGER SIGN ARE REQUIRED AT THE ABOVE WORK SITES WHEN:
   a. FOUR OR MORE WORK VEHICLES ENTER THE TRAFFIC LANES IN A ONE HOUR PERIOD.
   b. THE WORK AVTIVITY REQUIRES FREQUENT ENCROACHMENT INTO THE LANE OPEN TO TRAFFIC.

   THE FLAGGER SHALL BE STATIONED APPROXIMATELY 100' (30 m) TO 200' (60 m) IN ADVANCE OF THE WORKERS.
8. 12' MIN. WIDTH TANGENT SECTION
   16' MIN. WIDTH CURVE SECTION.

ALL DIMENSIONS ARE IN INCHES (MILLIMETERS) UNLESS OTHERWISE SHOWN.

FILE NAME = c:\pw_work\pwidot\leysa\d8106315\tc17.dgn	USER NAME = leysa	DESIGNED -	REVISED - J.A.F. 12-06	STATE OF ILLINOIS DEPARTMENT OF TRANSPORTATION
		DRAWN - D.W.S.	REVISED - S.P.B. 01-07	
	PLOT SCALE = 100.0000 ' / in.	CHECKED -	REVISED - S.P.B. 12-09	
	PLOT DATE = 4/17/2014	DATE - 11-96	REVISED - M.D. 06-13	

TRAFFIC CONTROL DETAILS FOR FREEWAY
SHOULDER CLOSURES AND PARTIAL RAMP CLOSURES

SCALE: NONE | SHEET NO. 1 OF 1 SHEETS | STA. TO STA.

F.A.I. RTE.	SECTION	COUNTY	TOTAL SHEETS	SHEET NO.
90/94	2012-0521	COOK	165	112
	TC-17	CONTRACT NO. 60T93		

FED. ROAD DIST. NO. 1 | ILLINOIS | FED. AID PROJECT

tc17.dgn 4/17/2014 8:48:55 AM User=leysa

SIGNING FOR FLAGGING OPERATIONS AT WORK ZONE OPENINGS

WORK ZONE EXIT OPENING

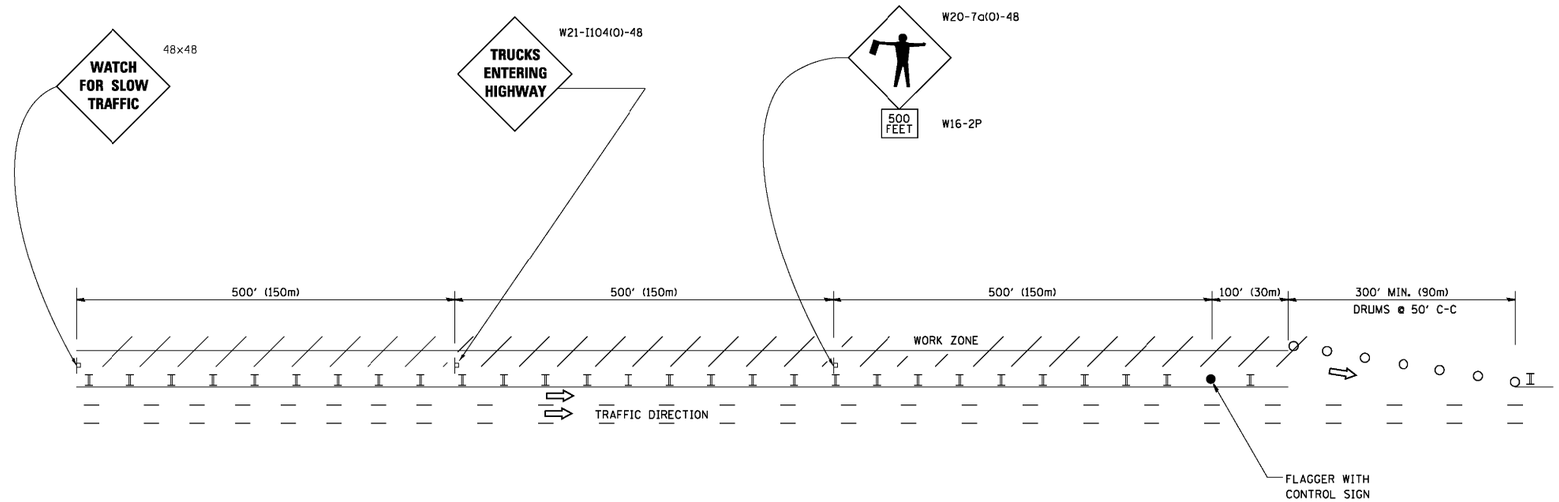

WORK ZONE ENTRY OPENING

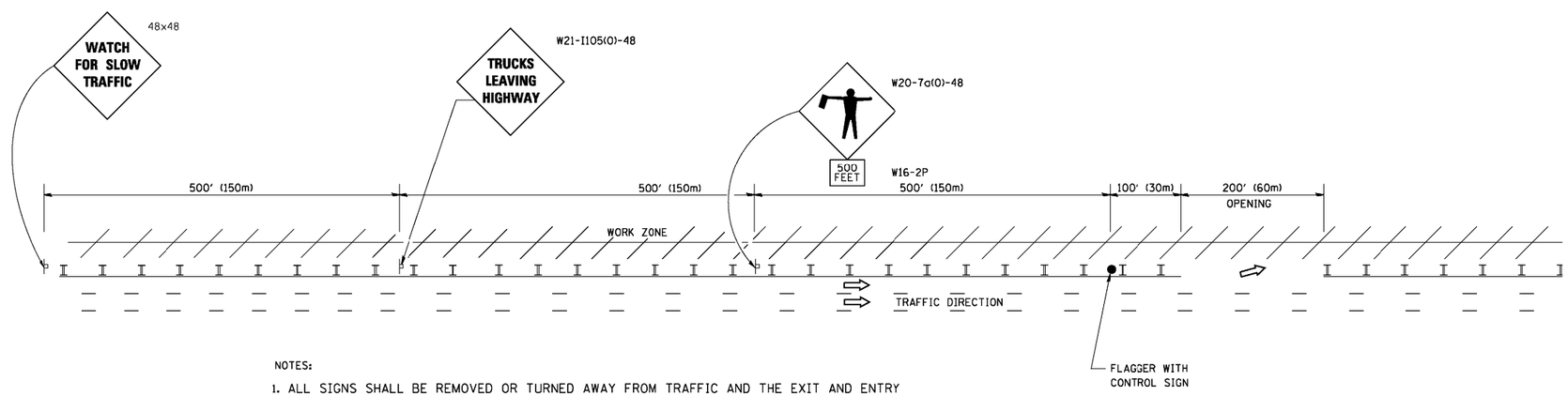

NOTES:

1. ALL SIGNS SHALL BE REMOVED OR TURNED AWAY FROM TRAFFIC AND THE EXIT AND ENTRY OPENINGS SHALL BE CLOSED WHEN THE FLAGGING OPERATION CEASES. NON OPERATING EQUIPMENT SHALL COMPLY WITH ARTICLE 701.11
2. WORK ZONE OPENINGS SHALL BE A MINIMUM OF ONE HALF MILE APART AND A MINIMUM OF ONE QUARTER MILE FROM ALL ENTRANCE AND EXIT RAMPS.
3. EXITING THE WORK ZONE AT ANY PLACE OTHER THAN AT A WORK ZONE EXIT OPENING WILL BE PROHIBITED.
4. ALL VEHICLES SHALL ENTER THE WORK ZONE AT ENTRY OPENINGS, USING THEIR TURN SIGNALS TO WARN MOTORISTS
5. FLAGGERS SHALL NOT STOP TRAFFIC OR DIRECT TRAFFIC INTO AN ADJACENT LANE.

ALL DIMENSIONS ARE IN INCHES (MILLIMETERS) UNLESS OTHERWISE SHOWN

FILE NAME = c:\pw_work\pwidot\footemj\d0108315\tc18.dgn	USER NAME = footemj	DESIGNED -	REVISED - J.A.F. 02-06	STATE OF ILLINOIS DEPARTMENT OF TRANSPORTATION	FREEWAY/EXPRESSWAY SIGNING FOR FLAGGING OPERATIONS AT WORK ZONE OPENINGS ON FREEWAYS/EXPRESSWAYS			F.A.I. RTE.	SECTION	COUNTY	TOTAL SHEETS	SHEET NO.
		DRAWN -	REVISED - S.P.B. 01-07					90/94	2012-0521	COOK	165	113
	PLOT SCALE = 50.000 ' / in.	CHECKED -	REVISED - S.P.B. 12-09						TC-18	CONTRACT NO. 60T93		
	PLOT DATE = 7/8/2013	DATE -	REVISED - M.D. 06-13		SCALE: NONE	SHEET NO. 1 OF 1 SHEETS	STA. TO STA.		FED. ROAD DIST. NO. 1	ILLINOIS	FED. AID PROJECT	

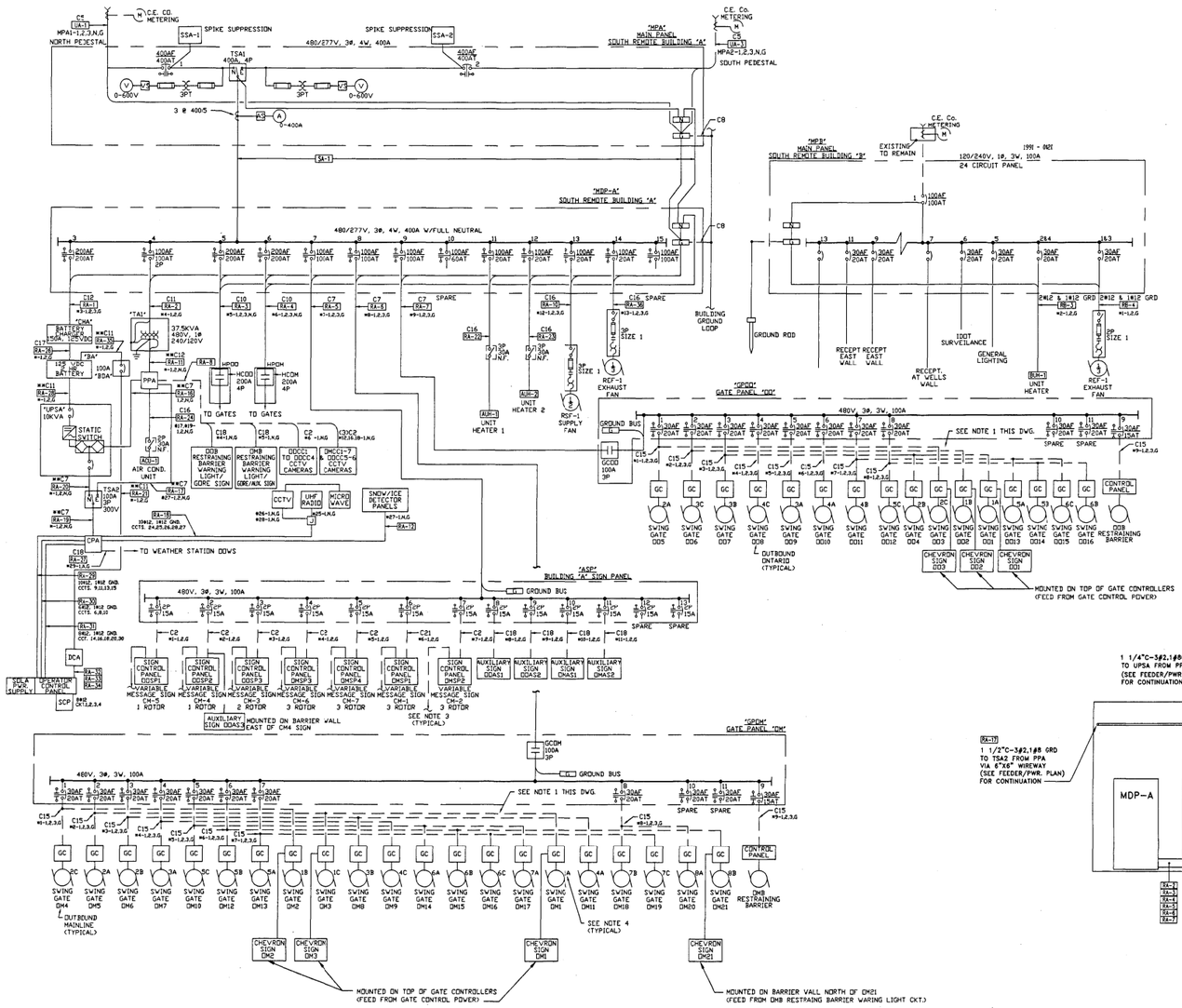

NOTES:

1.) POWER LINES TO INDIVIDUAL GATE CONTROLS TO BE PULLED THROUGH EXISTING 4" CONDUIT.

2.) * INDICATES PANEL PREFIX.

3.) CIRCUIT FROM ROADWAY LIGHTING CONTROL.

4.) NUMBER SHOWN ADJACENT TO SWING GATE MOTOR IDENTIFIES CIRCUIT NUMBER OF THREE PHASE BREAKER IN RESPECTIVE GATE HEATER PANEL. LETTER INDICATES PHASE TO BE USED TO FEED THE 277V GATE HEATER. EXAMPLE: SWING GATE DM1 IS FED FROM PANEL MPDM, CIRCUIT NUMBER ONE, PHASE A (SWING GATES DM2 & DM3 ARE FED FROM PHASE B AND PHASE C OF THE SAME CIRCUIT). SEE TYPICAL WIRING DIAGRAM ON DWG. E-89.

CABLE SCHEDULE

TAG	NO. & WIRE SIZE	REMARKS	
		MULTI-CONDUCTOR CABLE	
C1	4#4/0, 1#6 GND.		
C2	2#6, 1#10 GND.		
C3	3#4, 1#6 GND.		
C4	2#1/0, 1#4 GND.		
C5	4#500MCM, 1#1/0 GND.		
C6	3#6, 1#10 GND.		
C7	3#2, 1#8 GND. **2#2,1#8GND.		
C8	1#4/0 GROUND WIRE		
C9	3#8, 1#10 GND.		
C10	4#3/0 1#6 GND.		
C11	2#2, 1#8 GND. **2#1,1#8GND.		
C12	3#2/0 1#4 GND. **3#2,1#4GND.		
C13	2 SETS OF 4#250MCM, 1#2 GND.EA		
C14	3#1, 1#6 GND.		
C15	3#10, 1#10 GND.		
C16	3#12, 1#12 GND.		
C17	2#4/0, 1#4 GND.		
C18	2#10, 1#10 GND.		
C19	2#8, 1#10 GND.		
C20	4#10, 1#10 GND.		
C21	2/C #4, 1#10 GND.		

CHANGEABLE MESSAGE SIGN AUXILARY FEEDER SCHEDULE

CM-1	FEED FROM IDOT PWR CENTER "Y"
CM-2	FEED FROM IDOT PWR CENTER "Y"
CM-3	FEED FROM IDOT PWR CENTER "S"
CM-4	FEED FROM IDOT PWR CENTER "S"
CM-5	FEED FROM IDOT PWR CENTER "S"
CM-6	FEED FROM IDOT PWR CENTER "S"
CM-7	FEED FROM IDOT PWR CENTER "N"

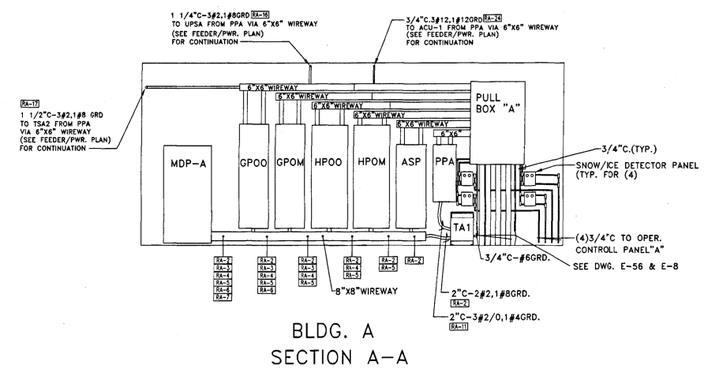

BLDG. A
SECTION A-A

NOTES:

1. THE ABOVE DRAWINGS REPRESENT AS LET DESIGN TO AID CONTRACTOR IN ASCERTAINING EXISTING CONDITIONS.

2. CONTRACTOR SHALL CONTACT IDOT D1 TO REQUEST THE MOST UP TO DATE RECORD DRAWINGS AVAILABLE AT THE TIME OF LETTING.

FOR INFORMATION ONLY

J:\293\Task-2\DGN\CADD Sheets\114_D160T93-sht-details055.dgn

SINGH
SINGH - ASSOCIATES, INC.
CONSULTING ENGINEERS

USER NAME = mgarvida	DESIGNED - DJ/AG	REVISED -	
FILE NAME = 114_D160T93-sht-details055	DRAWN - DS/AS	REVISED -	
PLOT SCALE = 2.0000000:1.000000	CHECKED - IY	REVISED -	
PLOT DATE = 06-MAY-2015 15:27	DATE - 5/6/2015	REVISED -	

STATE OF ILLINOIS
DEPARTMENT OF TRANSPORTATION

REMOTE BUILDING A SINGLE LINE DIAGRAM

SCALE: NTS | SHEET OF SHEETS | STA. TO STA.

F.A.I. RTE.	SECTION	COUNTY	TOTAL SHEETS	SHEET NO.
90/94	2012-0521	COOK	165	114
		CONTRACT NO. 60T93		
	ILLINOIS	FED. AID PROJECT		

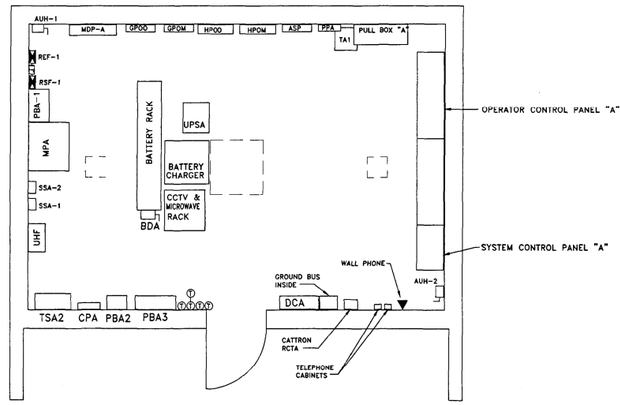

BLDG. A
EQUIPMENT LAYOUT

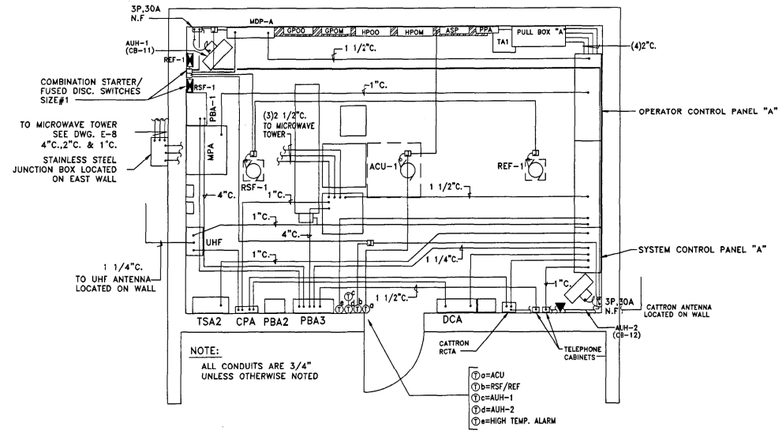

BLDG. A
COMMUNICATIONS
AND HVAC

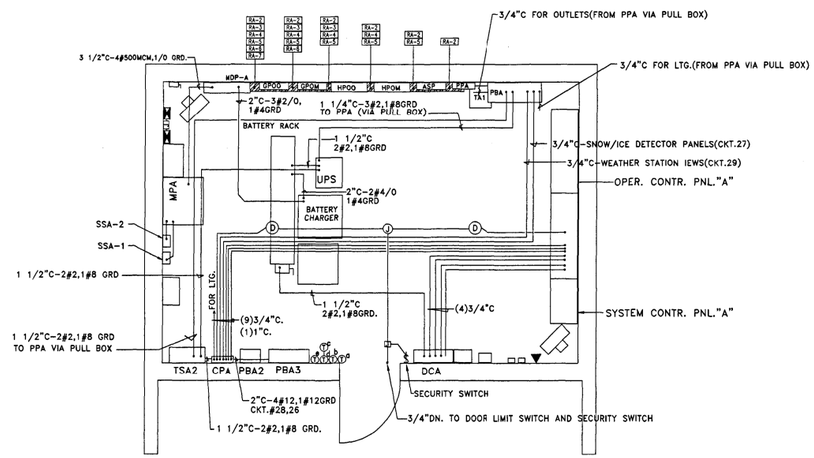

BLDG. A
FEEDERS AND POWER

NOTES:

1. THE ABOVE DRAWINGS REPRESENT AS LET DESIGN TO AID CONTRACTOR IN ASCERTAINING EXISTING CONDITIONS.
2. CONTRACTOR SHALL CONTACT IDOT D1 TO REQUEST THE MOST UP TO DATE RECORD DRAWINGS AVAILABLE AT THE TIME OF LETTING.

FOR INFORMATION ONLY

J:\293\Task-2\DGN\CADD Sheets\W5_D160T93-sht-details056.dgn

SINGH
SINGH - ASSOCIATES, INC.
CONSULTING ENGINEERS

USER NAME = mgarvida	DESIGNED - DJ/AG	REVISED -	
FILE NAME = 115_D160T93-sht-details056	DRAWN - DS/AS	REVISED -	
PLOT SCALE = 2.000000:1.000000	CHECKED - IY	REVISED -	
PLOT DATE = 06-MAY-2015 15:28	DATE - 5/6/2015	REVISED -	

STATE OF ILLINOIS
DEPARTMENT OF TRANSPORTATION

REMOTE BUILDING A EQUIPMENT LAYOUT

SCALE: NTS | SHEET OF SHEETS | STA. TO STA.

F.A.I. RTE.	SECTION	COUNTY	TOTAL SHEETS	SHEET NO.
90/94	2012-0521	COOK	165	115

CONTRACT NO. 60T93

ILLINOIS FED. AID PROJECT

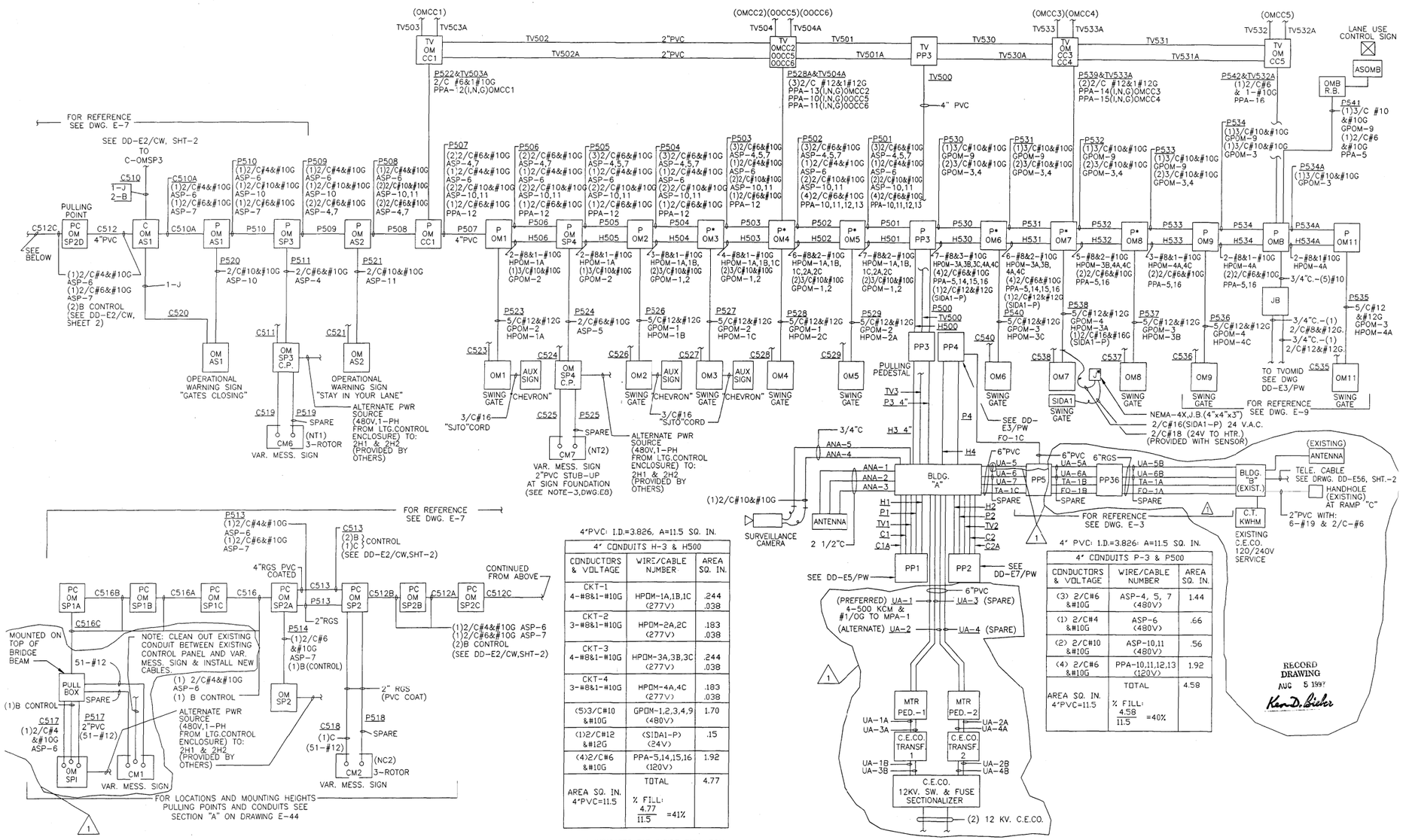

4"PVC: I.D.=3.826, A=11.5 SQ. IN.

4" CONDUITS H-3 & H500		
CONDUCTORS & VOLTAGE	WIRE/CABLE NUMBER	AREA SQ. IN.
CKT-1 4-#8&1-#10G	HPOM-1A,1B,1C (277V)	.244 .038
CKT-2 3-#8&1-#10G	HPOM-2A,2C (277V)	.183 .038
CKT-3 4-#8&1-#10G	HPOM-3A,3B,3C (277V)	.244 .038
CKT-4 3-#8&1-#10G	HPOM-4A,4C (277V)	.183 .038
(5)3/C#10 &#10G	GPOM-1,2,3,4,9 (480V)	1.70
(1)2/C#12 &#12G	(SIDA1-P) (24V)	.15
(4)2/C#6 &#10G	PPA-5,14,15,16 (120V)	1.92
AREA SQ. IN. 4"PVC=11.5	TOTAL % FILL: 4.77 / 11.5 =41%	4.77

* INDICATES TAP INSIDE PULL BOX

4" PVC: I.D.=3.826; A=11.5 SQ. IN.

4" CONDUITS P-3 & P500		
CONDUCTORS & VOLTAGE	WIRE/CABLE NUMBER	AREA SQ. IN.
(3) 2/C#6 &#10G	ASP-4, 5, 7 (480V)	1.44
(1) 2/C#4 &#10G	ASP-6 (480V)	.66
(2) 2/C#10 &#10G	ASP-10,11 (480V)	.56
(4) 2/C#6 &#10G	PPA-10,11,12,13 (120V)	1.92
AREA SQ. IN. 4"PVC=11.5	TOTAL % FILL: 4.58 / 11.5 =40%	4.58

NOTES:

1. THE ABOVE DRAWINGS REPRESENT AS LET DESIGN TO AID CONTRACTOR IN ASCERTAINING EXISTING CONDITIONS.
2. CONTRACTOR SHALL CONTACT IDOT D1 TO REQUEST THE MOST UP TO DATE RECORD DRAWINGS AVAILABLE AT THE TIME OF LETTING.

FOR INFORMATION ONLY

SINGH
SINGH - ASSOCIATES, INC.
CONSULTING ENGINEERS

USER NAME = mgarvida	DESIGNED - DJ/AG	REVISED -	
FILE NAME = 116_D160T93-sht-details057	DRAWN - DS/AS	REVISED -	
PLOT SCALE = 2.000000:1.000000	CHECKED - IY	REVISED -	
PLOT DATE = 06-MAY-2015 15:29	DATE - 5/6/2015	REVISED -	

STATE OF ILLINOIS
DEPARTMENT OF TRANSPORTATION

REMOTE BUILDING A KENNEDY NORTHWEST BOUND POWER AND HEATER WIRING

SCALE: NTS | SHEET OF SHEETS | STA. TO STA.

F.A.I. RTE.	SECTION	COUNTY	TOTAL SHEETS	SHEET NO.
90/94	2012-0521	COOK	165	116

CONTRACT NO. 60T93

ILLINOIS FED. AID PROJECT

J:\293\Task-2\DGN\CADD Sheets\16_D160T93-sht-details057.dgn

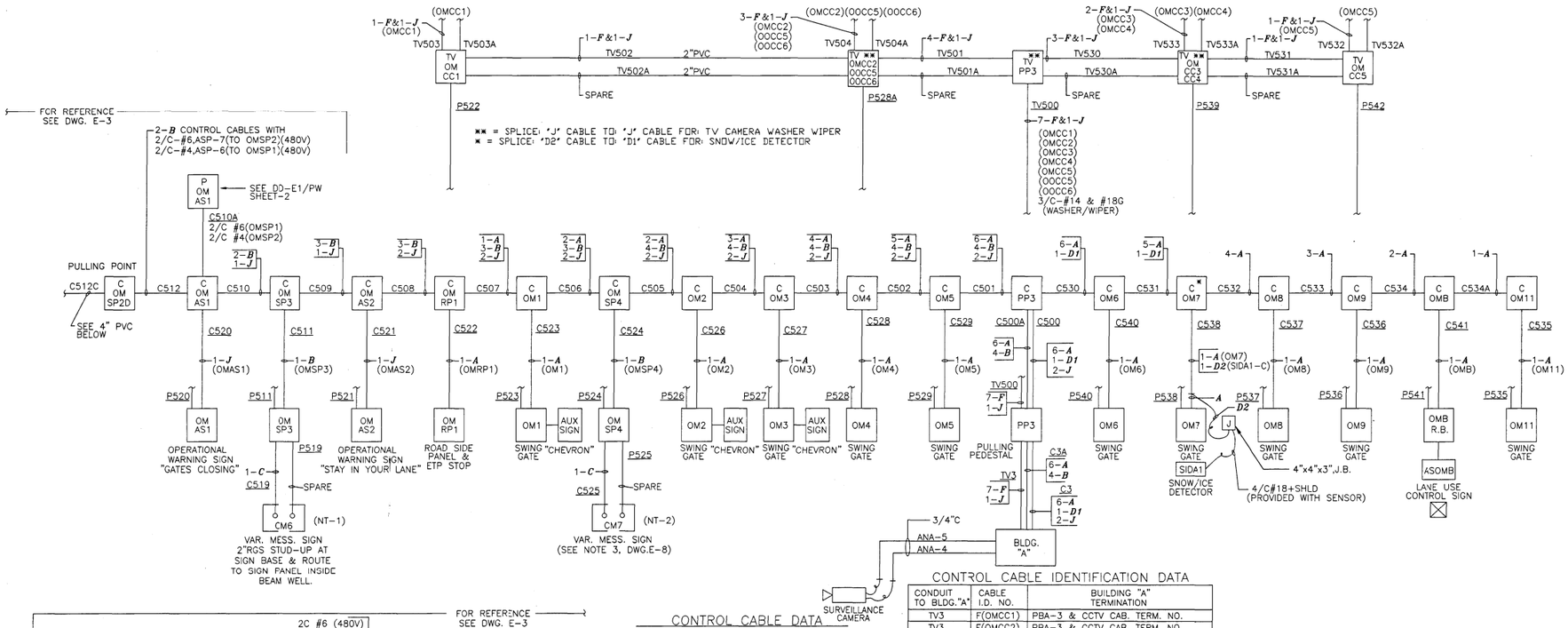

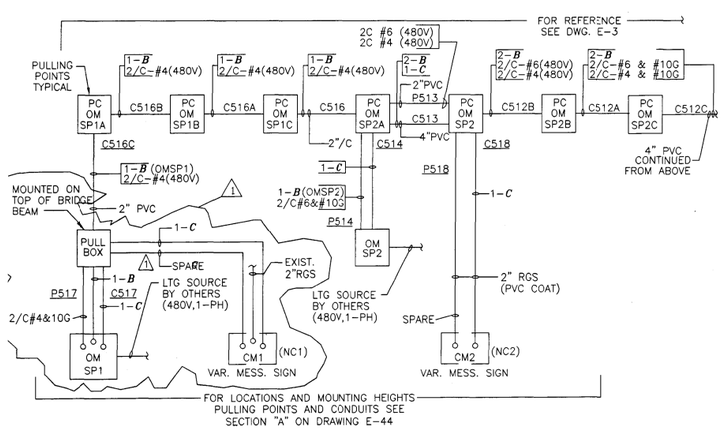

CONTROL CABLE DATA

- *A* – 20/C #18 & #18G, SHIELDED
- *B* – 30/C #18 & #18G, SHIELDED
- *C* – (51) #12 SINGLE CONDUCTOR,BUNDLED WIRE, NO SHIELD (FOR USE AT VARIABLE MESSAGE SIGN) 2
- *D1* – 4/C #14 & #18G, SHIELDED 2C#12 & #12G, NO SHIELD.
- *D2* – 4/C #18 & #18G, SHIELDED; 2/C #16, NO SHIELD (FOR USE AT SNOW/ICE DETECTOR)
- *E* – 6/C #14 & #18G, (FOR WEATHER STATIONS "OOWS" & "IEWS")
- *F* – FIBER OPTIC CABLE WITH (4) OPTIC FIBERS AND INNER AND OUTER PVC JACKET
- *G* – SENSOR CABLE BETWEEN WEATHER STATIONS AND THE ROAD SURFACE CONDITION SENSORS (2000 FT. PROVIDED WITH SENSOR)
- *I* – CCTV CAMERA, POWER AND CONTROL CABLE (50 FT. PROVIDED WITH CAMERA)
- *J* – 3/C #14 & #18G, SHIELDED (CCTV WASHER/WIPER CONTROL & OPERATIONAL WARNING SIGNS)
- *T1*– TELEPHONE CABLE, (8) PAIR #18 AWG (TAMAQUA CAT.#)
- *T2*– TELEPHONE CABLE, (4) PAIR #18 AWG (TAMAQUA CAT.#)

CONTROL CABLE IDENTIFICATION DATA

CONDUIT TO BLDG."A"	CABLE I.D. NO.	BUILDING "A" TERMINATION
TV3	F(OMCC1)	PBA-3 & CCTV CAB. TERM. NO.
TV3	F(OMCC2)	PBA-3 & CCTV CAB. TERM. NO.
TV3	F(OMCC3)	PBA-3 & CCTV CAB. TERM. NO.
TV3	F(OMCC4)	PBA-3 & CCTV CAB. TERM. NO.
TV3	F(OMCC5)	PBA-3 & CCTV CAB. TERM. NO.
TV3	F(OOCC5)	PBA-3 & CCTV CAB. TERM. NO.
TV3	F(OOCC6)	PBA-3 & CCTV CAB. TERM. NO.
TV3	J(CCTV)	PBA-3&OCP-A: RACK NO. SLOT NO.
C3A	A(OMRP1)	OCP-A: RACK NO. SLOT NO.
C3A	A(OM1)	OCP-A: RACK NO. SLOT NO.
C3A	A(OM2)	OCP-A: RACK NO. SLOT NO.
C3A	A(OM3)	OCP-A: RACK NO. SLOT NO.
C3A	A(OM4)	OCP-A: RACK NO. SLOT NO.
C3A	A(OM5)	OCP-A: RACK NO. SLOT NO.
C3A	B(OMSP1)	OCP-A: RACK NO. SLOT NO.
C3A	B(OMSP2)	OCP-A: RACK NO. SLOT NO.
C3A	B(OMSP3)	OCP-A: RACK NO. SLOT NO.
C3A	B(OMSP4)	OCP-A: RACK NO. SLOT NO.
C3	A(OM6)	OCP-A: RACK NO. SLOT NO.
C3	A(OM7)	OCP-A: RACK NO. SLOT NO.
C3	A(OM8)	OCP-A: RACK NO. SLOT NO.
C3	A(OM9)	OCP-A: RACK NO. SLOT NO.
C3	A(OMB)	OCP-A: RACK NO. SLOT NO.
C3	A(OM11)	OCP-A: RACK NO. SLOT NO.
C3	D1(SIDA1-C)	OCP-A: (TO SNOW/ICE CONTROL PNL #1)
C3	J(OMAS1)	OCP-A: RACK NO. SLOT NO.
C3	J(OMAS2)	OCP-A: RACK NO. SLOT NO.

NOTES:

1. THE ABOVE DRAWINGS REPRESENT AS LET DESIGN TO AID CONTRACTOR IN ASCERTAINING EXISTING CONDITIONS.
2. CONTRACTOR SHALL CONTACT IDOT D1 TO REQUEST THE MOST UP TO DATE RECORD DRAWINGS AVAILABLE AT THE TIME OF LETTING.

FOR INFORMATION ONLY

SINGH
SINGH - ASSOCIATES, INC.
CONSULTING ENGINEERS

USER NAME = mgarvida	DESIGNED - DJ/AG	REVISED -	
FILE NAME = 117_D160T93-sht-details058	DRAWN - DS/AS	REVISED -	
PLOT SCALE = 2.000000:1.000000	CHECKED - IY	REVISED -	
PLOT DATE = 06-MAY-2015 15:30	DATE - 5/6/2015	REVISED -	

STATE OF ILLINOIS
DEPARTMENT OF TRANSPORTATION

REMOTE BUILDING A KENNEDY NORTHWEST BOUND
CONTROL CABLE WIRING

SCALE: NTS | SHEET OF SHEETS | STA. TO STA.

F.A.I. RTE.	SECTION	COUNTY	TOTAL SHEETS	SHEET NO.
90/94	2012-0521	COOK	165	117

CONTRACT NO. 60T93
ILLINOIS FED. AID PROJECT

J:\293\Task-2\DGN\CADD Sheets\117_D160T93-sht-details058.dgn

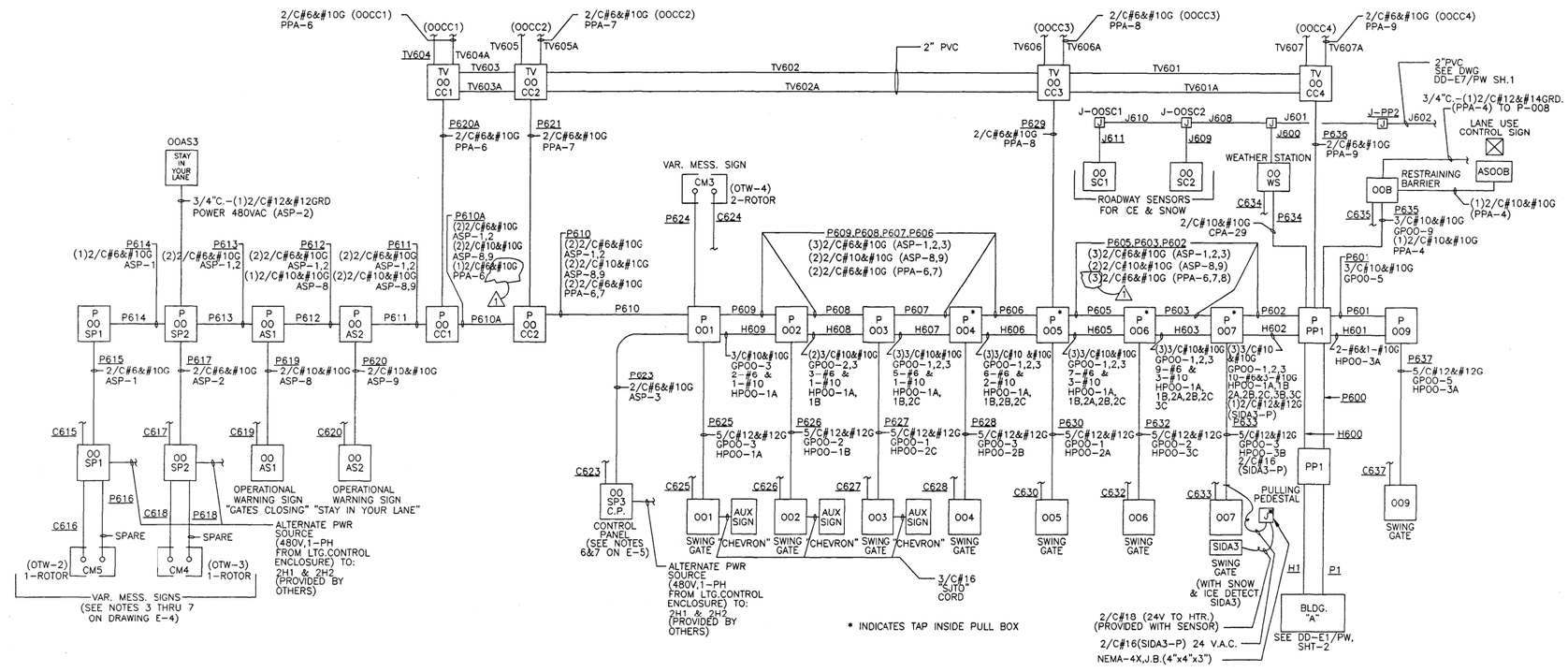

4" PVC: I.D.=3.826, AS=11.5 SQ. IN.

4" CONDUITS H-1 & H600		
CONDUCTORS & VOLTAGE	WIRE/CABLE NUMBER	AREA SQ. IN.
CKT-1 3-#6&1-#10G	HPOO-1A,1B (277V)	.24 .038
4-#6&1-#10G	HPOO-2A,2B,2C (277V)	.32 .038
4-#6&1-#10G	HPOO-3A,3B,3C (277V)	.32 .038
(5)3/C#10&#10G	GP00-1,2,3,5,9 (480V)	1.70
(1)2/C#10&#10G	CPA-29 (120V)	.28
(1)2/C#12&#12G	(SIDA3-P) (24V)	.15
AREA SQ. IN. 4"PVC=11.5	TOTAL % FILL: 3.124 / 11.5 =27%	3.124

4" PVC: I.D.=3.826, AS=11.5 SQ. IN.

4" CONDUITS P-1 & P600		
CONDUCTORS & VOLTAGE	WIRE/CABLE NUMBER	AREA SQ. IN.
(3)2/C#6&#10G	ASP-1, 2, 3 (480V)	1.44
(2)2/C#10&#10G	ASP-8,9 (480V)	.56
(4)2/C#6&#10G	PPA-6,7,8,9 (120V)	1.92
(1)2/C#10&#10G	PPA-4 (120V)	.28
AREA SQ. IN. 4"PVC=11.5	TOTAL % FILL: 4.2 / 11.5 =37%	4.2

RECORD DRAWING
AUG 5 1997
Ken D. Sicker

NOTES:

1. THE ABOVE DRAWINGS REPRESENT AS LET DESIGN TO AID CONTRACTOR IN ASCERTAINING EXISTING CONDITIONS.
2. CONTRACTOR SHALL CONTACT IDOT D1 TO REQUEST THE MOST UP TO DATE RECORD DRAWINGS AVAILABLE AT THE TIME OF LETTING.

FOR INFORMATION ONLY

J:\293\Task-2\DGN\CADD Sheets\118_D160T93-sht-details059.dgn

SINGH
SINGH - ASSOCIATES, INC.
CONSULTING ENGINEERS

USER NAME = mgarvida	DESIGNED - DJ/AG	REVISED -	
FILE NAME = 118_D160T93-sht-details059	DRAWN - DS/AS	REVISED -	
PLOT SCALE = 2.000000:1.000000	CHECKED - IY	REVISED -	
PLOT DATE = 06-MAY-2015 15:31	DATE - 5/6/2015	REVISED -	

STATE OF ILLINOIS
DEPARTMENT OF TRANSPORTATION

REMOTE BUILDING A WEST BOUND ONTARIO/OHIO FEEDER POWER AND HEATER WIRING

SCALE: NTS | SHEET OF SHEETS | STA. TO STA.

F.A.I. RTE.	SECTION	COUNTY	TOTAL SHEETS	SHEET NO.
90/94	2012-0521	COOK	165	118

CONTRACT NO. 60T93

ILLINOIS FED. AID PROJECT

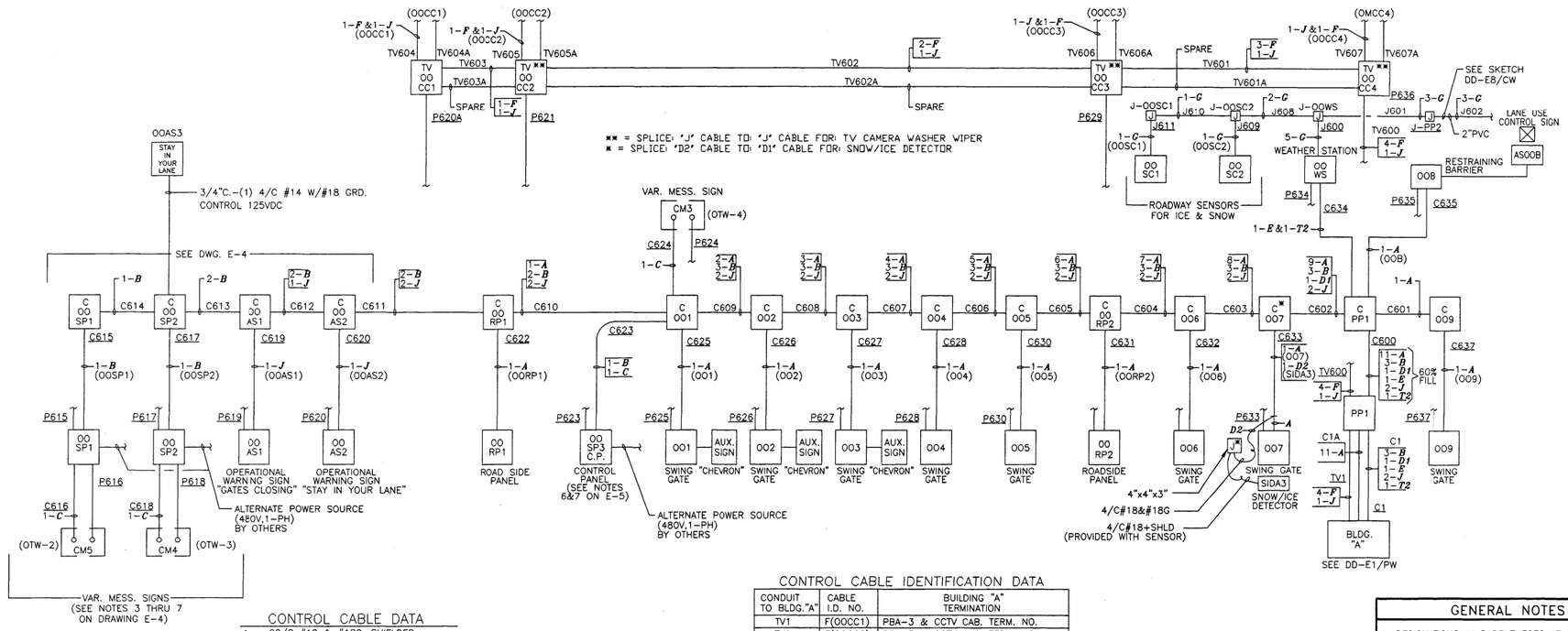

CONTROL CABLE DATA

A – 20/C #18 & #18G, SHIELDED

B – 30/C #18 & #18G, SHIELDED

1 **C** – (51) #12 SINGLE CONDUCTOR,BUNDLED WIRE, NO SHIELD (FOR USE AT VARIABLE MESSAGE SIGN)

D1 – 4/C #14 & #18G, SHIELDED; 2/C #12 & #12G, NO SHIELD

D2 – 4/C #18 & #18G, SHIELDED; 2/C #16, NO SHIELD (FOR USE AT SNOW/ICE DETECTOR)

E – 6/C #14 & #18G, (FOR WEATHER STATIONS "OOWS" & "IEWS")

F – FIBER OPTIC CABLE WITH (4) OPTIC FIBERS AND INNER AND OUTER PVC JACKET

G – SENSOR CABLE BETWEEN WEATHER STATIONS AND THE ROAD SURFACE CONDITION SENSORS (2000 FT. PROVIDED WITH SENSOR)

I – CCTV CAMERA, POWER AND CONTROL CABLE (50 FT. PROVIDED WITH CAMERA)

J – 3/C #14 & #18G, SHIELDED (CCTV WASHER/WIPER CONTROL & OPERATIONAL WARNING SIGNS)

T1– TELEPHONE CABLE, (8) PAIR #18 AWG (TAMAQUA CAT.#)

T2– TELEPHONE CABLE, (4) PAIR #18 AWG (TAMAQUA CAT.#)

CONTROL CABLE IDENTIFICATION DATA

CONDUIT TO BLDG."A"	CABLE I.D. NO.	BUILDING "A" TERMINATION
TV1	F(OOCC1)	PBA-3 & CCTV CAB. TERM. NO.
TV1	F(OOCC2)	PBA-3 & CCTV CAB. TERM. NO.
TV1	F(OOCC3)	PBA-3 & CCTV CAB. TERM. NO.
TV1	F(OOCC4)	PBA-3 & CCTV CAB. TERM. NO.
TV1	J(CCTV)	PBA-3 & CCTV CAB. TO OCP-A
C1A	A(001)	OCP-A: RACK NO. SLOT NO.
C1A	A(002)	OCP-A: RACK NO. SLOT NO.
C1A	A(003)	OCP-A: RACK NO. SLOT NO.
C1A	A(004)	OCP-A: RACK NO. SLOT NO.
C1A	A(005)	OCP-A: RACK NO. SLOT NO.
C1A	A(OORP2)	OCP-A: RACK NO. SLOT NO.
C1A	A(006)	OCP-A: RACK NO. SLOT NO.
C1A	A(007)	OCP-A: RACK NO. SLOT NO.
C1A	A(009)	OCP-A: RACK NO. SLOT NO.
C1A	A(OOB)	OCP-A: RACK NO. SLOT NO.
C1A	A(OORP1)	OCP-A: RACK NO. SLOT NO.
C1	E(OOWS)	OCP-A: RACK NO. SLOT NO.
C1	B(OOSP1)	OCP-A: RACK NO. SLOT NO.
C1	B(OOSP2)	OCP-A: RACK NO. SLOT NO.
C1	B(OOSP3)	OCP-A: RACK NO. SLOT NO.
C1	D1(SIDA3-C)	OCP-A(TO SNOW/ICE DETECTOR CONT. PNL #3)
C1	J(OOAS1)	OCP-A: RACK NO. SLOT NO.
C1	J(OOAS2)	OCP-A: RACK NO. SLOT NO.
C1	T2(OOWS)	OCP-A (TO TELE. CABINET TTCA)

GENERAL NOTES

1. DESIGNATIONS IN PARENTHESES AT CONTROL CABLE INDICATIONS ARE FOR CABLE IDENTIFICATION PURPOSES.
2. STRANDED CONDUCTOR CABLE SHALL BE TERMINATED BY LUGS, CUP WASHERS, OR PRESSURE TYPE CONNECTORS. STRANDED CABLES SHALL NOT BE WRAPPED AROUND SCREW TYPE TERMINALS.

RECORD DRAWING
AUG 5 1997
Ken D. Lisker

NOTES:

1. THE ABOVE DRAWINGS REPRESENT AS LET DESIGN TO AID CONTRACTOR IN ASCERTAINING EXISTING CONDITIONS.
2. CONTRACTOR SHALL CONTACT IDOT D1 TO REQUEST THE MOST UP TO DATE RECORD DRAWINGS AVAILABLE AT THE TIME OF LETTING.

FOR INFORMATION ONLY

J:\293\Task-2\DGN\CADD Sheets\W9_D160T93-sht-details060.dgn

SINGH
SINGH - ASSOCIATES, INC.
CONSULTING ENGINEERS

USER NAME = mgarvida	DESIGNED - DJ/AG	REVISED -	
FILE NAME = 119_D160T93-sht-details060	DRAWN - DS/AS	REVISED -	
PLOT SCALE = 2.000000:1.000000	CHECKED - IY	REVISED -	
PLOT DATE = 06-MAY-2015 15:32	DATE - 5/6/2015	REVISED -	

STATE OF ILLINOIS
DEPARTMENT OF TRANSPORTATION

REMOTE BUILDING A WEST BOUND ONTARIO/OHIO FEEDER CONTROL CABLE WIRING

SCALE: NTS | SHEET OF SHEETS | STA. TO STA.

F.A.I. RTE.	SECTION	COUNTY	TOTAL SHEETS	SHEET NO.
90/94	2012-0521	COOK	165	119

CONTRACT NO. 60T93

ILLINOIS FED. AID PROJECT

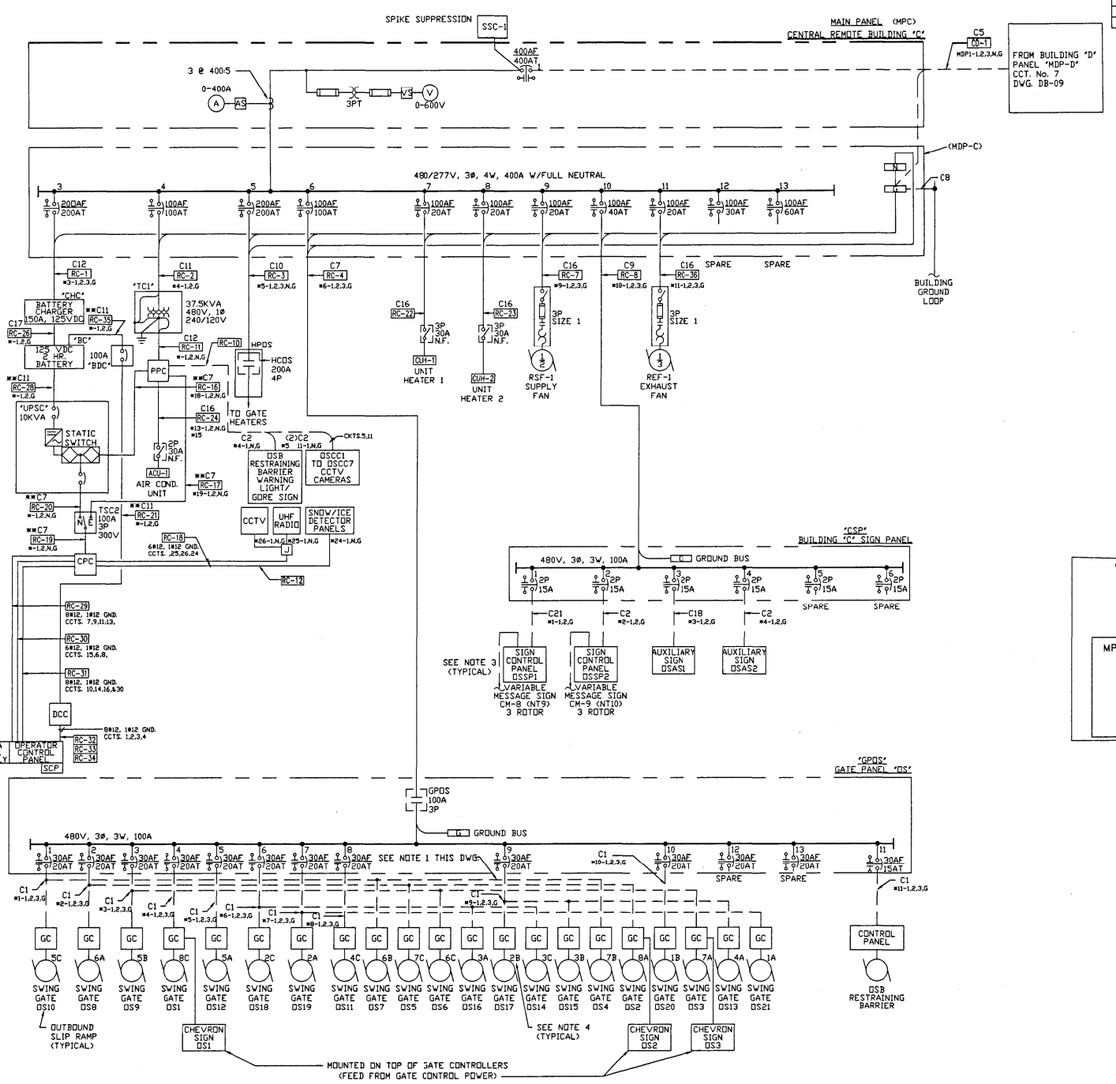

CHANGEABLE MESSAGE SIGN AUXILARY FEEDER SCHEDULE

CM-8	FEED FROM IDOT PWR CENTER "N"
CM-9	FEED FROM IDOT PWR CENTER "M"

CABLE SCHEDULE

TAG	NO. & WIRE SIZE	REMARKS	
		MULTI-CONDUCTOR CABLE	
C1	3#6, 1#10 GND.		
C2	2#6, 1#10 GND.		
C3	3#4, 1#6 GND.		
C4	2#1/0, 1#4 GND.		
C5	4#500MCM, 1#1/0 GND.		
C6	3#6, 1#10 GND.		
C7	3#2, 1#8 GND. **2#2,1#8GRD.		
C8	1#4/0 GROUND WIRE		
C9	3#8, 1#12 GND.		
C10	4#3/0 1#6 GND.		
C11	2#2, 1#8 GND. **2#1,1#8GRD.		
C12	3#2/0 1#4 GND. **3#2,1#8GRD.		
C13	2 SETS OF 4#250MCM, 1#2 GND.EA		
C14	3#1, 1#6 GND.		
C15	3#10, 1#10 GND.		
C16	3#12, 1#12 GND.		
C17	2#4/0, 1#4 GND.		
C18	2#10, 1#10 GND.		
C19	2#8, 1#10 GND.		
C20	4#10, 1#10 GND.		
C21	2/C #4, 1#10 GND.		

NOTES:

1.) POWER LINES TO INDIVIDUAL GATE CONTROLS TO BE PULLED THROUGH EXISTING 4" CONDUIT.

2.) * INDICATES PANEL PREFIX.

3.) CIRCUIT FROM ROADWAY LIGHTING CONTROL, SEE CM SIGN SCHEDULE

4.) NUMBER SHOWN ADJACENT TO SWING GATE MOTOR IDENTIFIES CIRCUIT NUMBER OF THREE PHASE BREAKER IN RESPECTIVE GATE HEATER PANEL. LETTER INDICATES PHASE TO BE USED TO FEED THE 277V GATE HEATER. EXAMPLE: SWING GATE DS3 IS FED FROM PANEL HPOS. CIRCUIT NUMBER SEVEN, PHASE A (SWING GATES DS4 & DS5 ARE FED FROM PHASE B AND PHASE C OF THE SAME CIRCUIT). SEE TYP. WIRING DIAGRAM ON DWG. E-89.

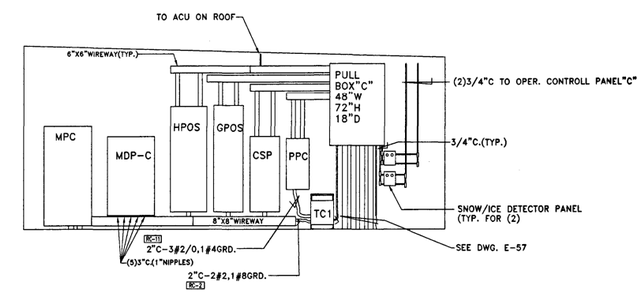

BLDG. C
SECTION A-A

RECORD DRAWING
AUG 5 1997
Ken D. Bieber

NOTES:

1. THE ABOVE DRAWINGS REPRESENT AS LET DESIGN TO AID CONTRACTOR IN ASCERTAINING EXISTING CONDITIONS.
2. CONTRACTOR SHALL CONTACT IDOT D1 TO REQUEST THE MOST UP TO DATE RECORD DRAWINGS AVAILABLE AT THE TIME OF LETTING.

FOR INFORMATION ONLY

J:\293\Task-2\DGN\CADD Sheets\20_D160T93-sht-details061.dgn

SINGH
SINGH - ASSOCIATES, INC.
CONSULTING ENGINEERS

USER NAME = mgarvida	DESIGNED - DJ/AG	REVISED -	
FILE NAME = 120_D160T93-sht-details061	DRAWN - DS/AS	REVISED -	
PLOT SCALE = 2.000000:1.000000	CHECKED - IY	REVISED -	
PLOT DATE = 06-MAY-2015 15:33	DATE - 5/6/2015	REVISED -	

STATE OF ILLINOIS
DEPARTMENT OF TRANSPORTATION

REMOTE BUILDING C SINGLE LINE DIAGRAM

SCALE: NTS | SHEET OF SHEETS | STA. TO STA.

F.A.I. RTE.	SECTION	COUNTY	TOTAL SHEETS	SHEET NO.
90/94	2012-0521	COOK	165	120
		CONTRACT NO. 60T93		
	ILLINOIS	FED. AID PROJECT		

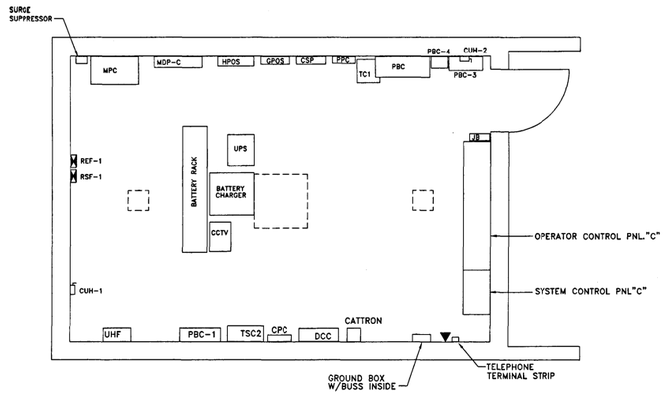

BLDG. C
EQUIPMENT LAYOUT

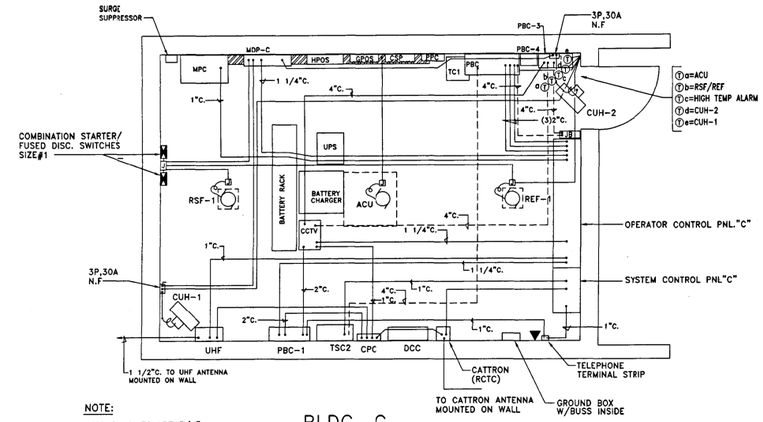

NOTE:
ALL CONDUITS ARE 3/4" UNLESS OTHERWISE NOTED

BLDG. C
COMMUNICATIONS AND HAVC

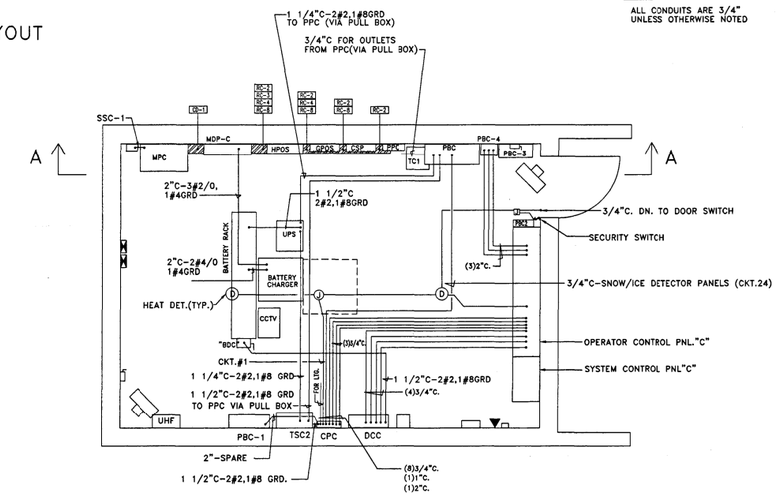

BLDG. C
FEEDERS AND POWER

RECORD DRAWING
AUG 5 1997
Ken D. Bicker

NOTES:

1. THE ABOVE DRAWINGS REPRESENT AS LET DESIGN TO AID CONTRACTOR IN ASCERTAINING EXISTING CONDITIONS.
2. CONTRACTOR SHALL CONTACT IDOT D1 TO REQUEST THE MOST UP TO DATE RECORD DRAWINGS AVAILABLE AT THE TIME OF LETTING.

FOR INFORMATION ONLY

J:\293\Task-2\DGN\CADD Sheets\121.D160T93-sht-details062.dgn

SINGH
SINGH - ASSOCIATES, INC.
CONSULTING ENGINEERS

USER NAME = mgarvida	DESIGNED - DJ/AG	REVISED -	
FILE NAME = 121.D160T93-sht-details062	DRAWN - DS/AS	REVISED -	
PLOT SCALE = 2.000000:1.000000	CHECKED - IY	REVISED -	
PLOT DATE = 06-MAY-2015 15:34	DATE - 5/6/2015	REVISED -	

STATE OF ILLINOIS
DEPARTMENT OF TRANSPORTATION

REMOTE BUILDING C EQUIPMENT LAYOUT

SCALE: NTS | SHEET OF SHEETS | STA. TO STA.

F.A.I. RTE.	SECTION	COUNTY	TOTAL SHEETS	SHEET NO.
90/94	2012-0521	COOK	165	121

CONTRACT NO. 60T93

ILLINOIS FED. AID PROJECT

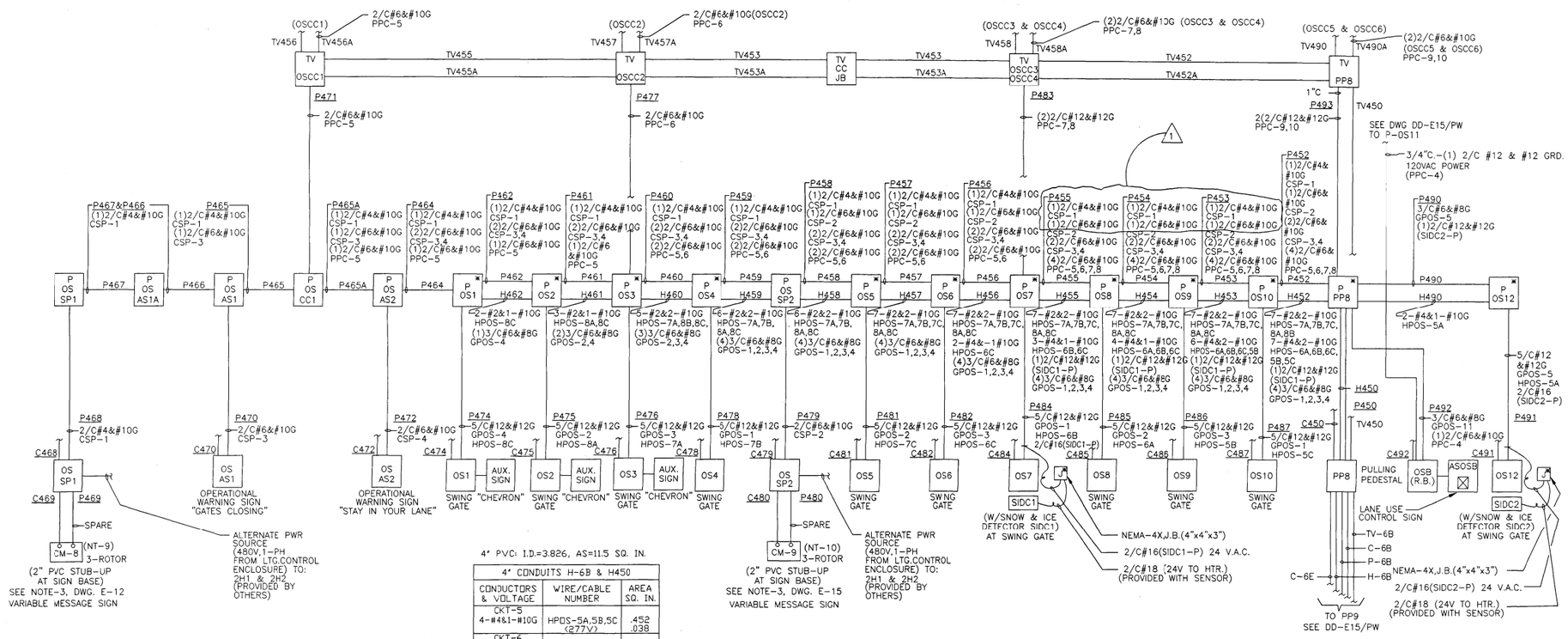

4" PVC: I.D.=3.826, AS=11.5 SQ. IN.

4" CONDUITS H-6B & H450		
CONDUCTORS & VOLTAGE	WIRE/CABLE NUMBER	AREA SQ. IN.
CKT-5 4-#4&1-#10G	HPOS-5A,5B,5C (277V)	.452 .038
CKT-6 4-#4&1-#10G	HPOS-6A,6B,6C, (277V)	.452 .038
CKT-7 4-#2&1-#10G	HPOS-7A,7B,7C (277V)	.608 .038
CKT-8 3-#2&1-#10G	HPOS-8A,8C (277V)	.456 .038
(5)3/C#6&#8G	GPOS-1,2,3,4,5 (480V)	3.55
(1)2/C#6&#10G	PPC-4 (120V)	.48
(1)2/C#12&#12G	(SIDC1-P) (24V)	.21
(1)2/C#12&#12G	(SIDC2-P) (24V)	.21
AREA SQ. IN. 4"PVC=11.5	TOTAL % FILL: $\frac{6.57}{11.5}$ =57%	6.57

4" PVC: I.D.=3.826, AS=11.5 SQ. IN.

4" CONDUITS P-6B & P450		
CONDUCTORS & VOLTAGE	WIRE/CABLE NUMBER	AREA SQ. IN.
(1)3/C#6&8G	GPOS-11 (480V)	.71
(1)2/C#4&10G	CSP-1 (480V)	.66
(6)2/C#6&10G	PPC-5,6,7,8,9,10 (120V)	2.88
(3)2/C#6&10G	CSP-2,3,4 (480V)	1.44
AREA SQ. IN. 4"PVC=11.5	TOTAL % FILL: $\frac{5.69}{11.5}$ =50%	5.69

* INDICATES TAP INSIDE PULL BOX

RECORD DRAWING
AUG 5 1997
Ken D. Bieber

NOTES:

1. THE ABOVE DRAWINGS REPRESENT AS LET DESIGN TO AID CONTRACTOR IN ASCERTAINING EXISTING CONDITIONS.
2. CONTRACTOR SHALL CONTACT IDOT D1 TO REQUEST THE MOST UP TO DATE RECORD DRAWINGS AVAILABLE AT THE TIME OF LETTING.

FOR INFORMATION ONLY

J:\293\Task-2\DGN\CADD Sheets\122_D160T93-sht-details063.dgn

SINGH
SINGH - ASSOCIATES, INC.
CONSULTING ENGINEERS

USER NAME = mgarvida	DESIGNED - DJ/AG	REVISED -	
FILE NAME = 122_D160T93-sht-details063	DRAWN - DS/AS	REVISED -	
PLOT SCALE = 2.0000000:1.000000	CHECKED - IY	REVISED -	
PLOT DATE = 06-MAY-2015 15:34	DATE - 5/6/2015	REVISED -	

STATE OF ILLINOIS
DEPARTMENT OF TRANSPORTATION

REMOTE BUILDING C OUTBOUND SLIP RAMP
POWER AND HEATER WIRING

SCALE: NTS | SHEET OF SHEETS | STA. TO STA.

F.A.I. RTE.	SECTION	COUNTY	TOTAL SHEETS	SHEET NO.
90/94	2012-0521	COOK	165	122
		CONTRACT NO. 60T93		
	ILLINOIS FED. AID PROJECT			

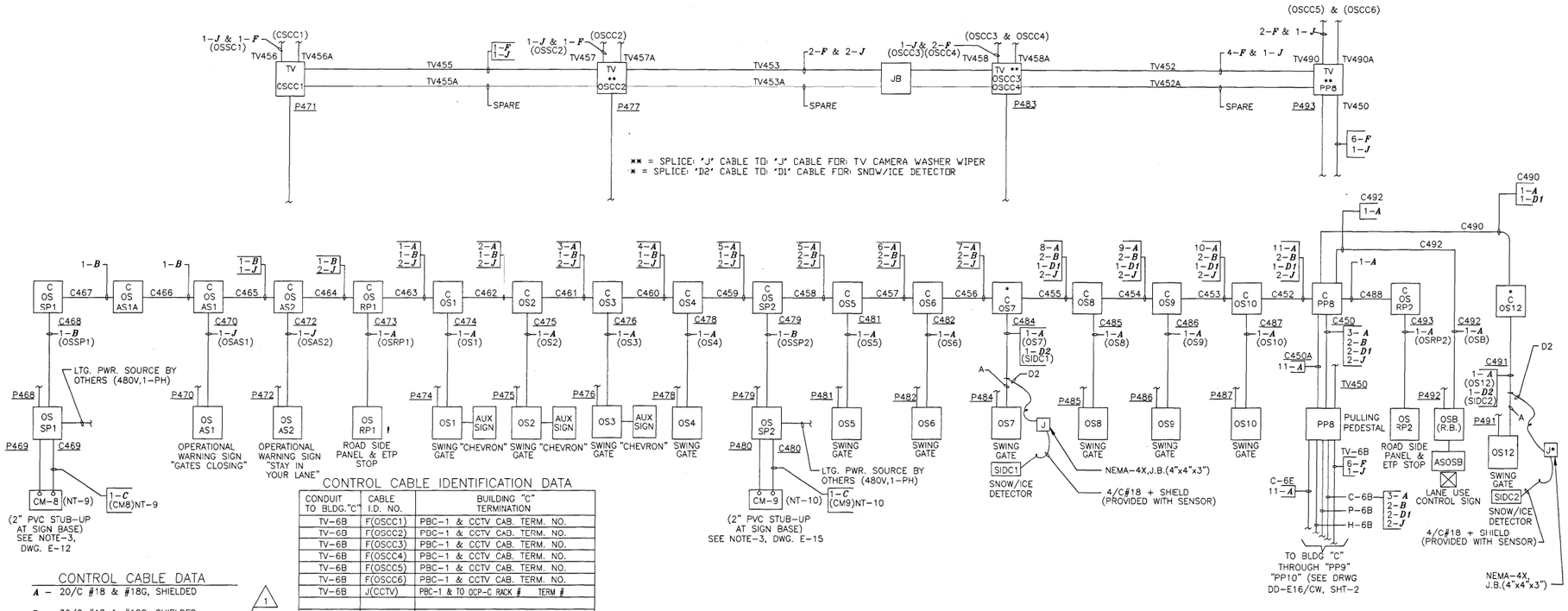

CONTROL CABLE DATA

A – 20/C #18 & #18G, SHIELDED

B – 30/C #18 & #18G, SHIELDED

C – (51) #12 SINGLE CONDUCTOR,BUNDLED WIRE, NO SHIELD (FOR USE AT VARIABLE MESSAGE SIGN) 1

D1 – 4/C #14 & #18G, SHIELDED; 2/C #12 & #12G, NO SHIELD

D2 – 4/C #18 & #18G, SHIELDED; 2/C #16, NO SHIELD (FOR USE AT SNOW/ICE DETECTOR)

E – 5/C #14 & #18G, (FOR WEATHER STATIONS "OOWS" & "IEWS")

F – FIBER OPTIC CABLE WITH (4) OPTIC FIBERS AND INNER AND OUTER PVC JACKET

G – SENSOR CABLE BETWEEN WEATHER STATIONS AND THE ROAD SURFACE CONDITION SENSORS (2000 FT. PROVIDED WITH SENSOR)

I – CCTV CAMERA, POWER AND CONTROL CABLE (50 FT. PROVIDED WITH CAMERA)

J – 3/C #14 & #18G, SHIELDED (CCTV WASHER/WIPER CONTROL & OPERATIONAL WARNING SIGNS)

T1– TELEPHONE CABLE, (8) PAIR #18 AWG (TAMAQUA CAT.#)

T2– TELEPHONE CABLE, (4) PAIR #18 AWG (TAMAQUA CAT.#)

CONTROL CABLE IDENTIFICATION DATA

CONDUIT TO BLDG."C"	CABLE I.D. NO.	BUILDING "C" TERMINATION
TV-6B	F(OSCC1)	PBC-1 & CCTV CAB. TERM. NO.
TV-6B	F(OSCC2)	PBC-1 & CCTV CAB. TERM. NO.
TV-6B	F(OSCC3)	PBC-1 & CCTV CAB. TERM. NO.
TV-6B	F(OSCC4)	PBC-1 & CCTV CAB. TERM. NO.
TV-6B	F(OSCC5)	PBC-1 & CCTV CAB. TERM. NO.
TV-6B	F(OSCC6)	PBC-1 & CCTV CAB. TERM. NO.
TV-6B	J(CCTV)	PBC-1 & TO OCP-C RACK # TERM #
C-6B	A(OSRP2)	OCP-C RACK # SLOT #
C-6B	A(OSB)	OCP-C RACK # SLOT #
C-6B	A(OS12)	OCP-C RACK # SLOT #
C-6B	B(OSSP1)	OCP-C RACK # SLOT #
C-6B	B(OSSP2)	OCP-C RACK # SLOT #
C-6B	J(OSAS1)	OCP-C RACK # SLOT #
C-6B	J(OSAS2)	OCP-C RACK # SLOT #
C-6B	DI(SIDC1-C)	OCP-C (TO SNOW/ICE DETECTOR PNL #1)
C-6B	DI(SIDC2-C)	OCP-C (TO SNOW/ICE DETECTOR PNL #2)
C-6E	A(OSRP1)	OCP-C: RACK # SLOT #
C-6E	A(OS1)	OCP-C: RACK # SLOT #
C-6E	A(OS2)	OCP-C: RACK # SLOT #
C-6E	A(OS3)	OCP-C: RACK # SLOT #
C-6E	A(OS4)	OCP-C: RACK # SLOT #
C-6E	A(OS5)	OCP-C: RACK # SLOT #
C-6E	A(OS6)	OCP-C: RACK # SLOT #
C-6E	A(OS7)	OCP-C: RACK # SLOT #
C-6E	A(OS8)	OCP-C: RACK # SLOT #
C-6E	A(OS9)	OCP-C: RACK # SLOT #
C-6E	A(OS10)	OCP-C: RACK # SLOT #

NOTES:

1. THE ABOVE DRAWINGS REPRESENT AS LET DESIGN TO AID CONTRACTOR IN ASCERTAINING EXISTING CONDITIONS.
2. CONTRACTOR SHALL CONTACT IDOT D1 TO REQUEST THE MOST UP TO DATE RECORD DRAWINGS AVAILABLE AT THE TIME OF LETTING.

FOR INFORMATION ONLY

SINGH
SINGH - ASSOCIATES, INC.
CONSULTING ENGINEERS

USER NAME = mgarvida	DESIGNED - DJ/AG	REVISED -	
FILE NAME = 123_D160T93-sht-details064	DRAWN - DS/AS	REVISED -	
PLOT SCALE = 2.000000:1.000000	CHECKED - IY	REVISED -	
PLOT DATE = 06-MAY-2015 15:35	DATE - 5/6/2015	REVISED -	

STATE OF ILLINOIS
DEPARTMENT OF TRANSPORTATION

REMOTE BUILDING C OUTBOUND SLIP RAMP CONTROL CABLE WIRING

SCALE: NTS | SHEET OF SHEETS | STA. TO STA.

F.A.I. RTE.	SECTION	COUNTY	TOTAL SHEETS	SHEET NO.
90/94	2012-0521	COOK	165	123
		CONTRACT NO. 60T93		
	ILLINOIS	FED. AID PROJECT		

J:\293\Task-2\DGN\CADD Sheets\23_D160T93-sht-details064.dgn

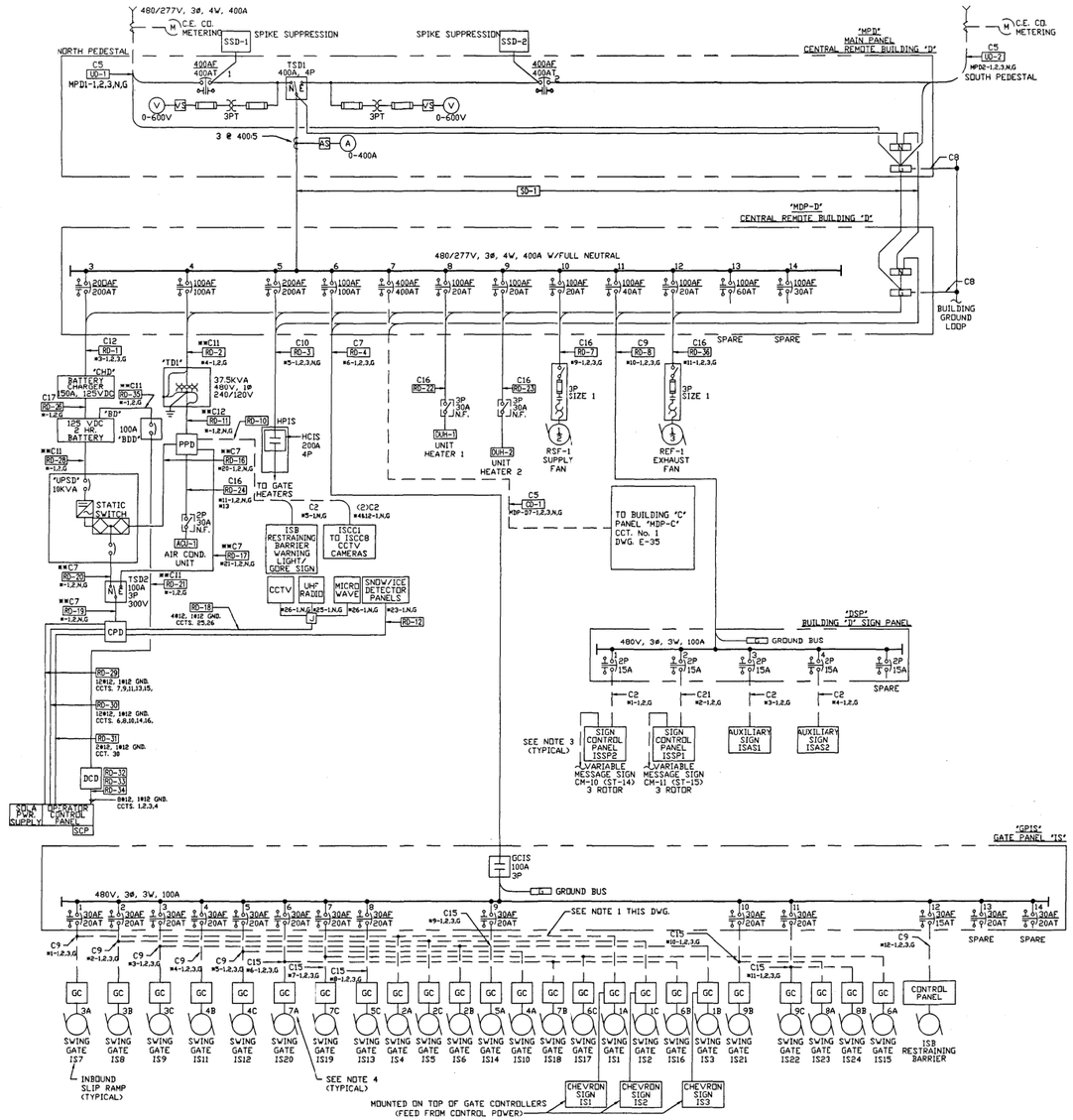

CHANGEABLE MESSAGE SIGN AUXILARY FEEDER SCHEDULE	
CM-10	FEED FROM IDOT PWR CENTER 'M'
CM-11	FEED FROM IDOT PWR CENTER 'L'

CABLE SCHEDULE		
TAG	NO. & WIRE SIZE	REMARKS
C1	3#6, 1#10 GND.	
C2	2#6, 1#10 GND.	
C3	3#4, 1#6 GND.	
C4	2#1/0, 1#4 GND.	
C5	4#500MCM, 1#1/0 GND.	
C6	3#6, 1#10 GND.	
C7	3#2, 1#8 GND. **2#2,1#8GND.	
C8	1#4/0 GROUND WIRE	
C9	3#8, 1#10 GND.	
C10	4#3/0 1#6 GND.	
C11	2#2, 1#8 GND. **2#1,1#8GND.	
C12	3#2/0 1#4 GND. **3#2,1#4GND.	
C13	2 SETS OF 4#250MCM, 1#2 GND.EA	
C14	3#1, 1#6 GND.	
C15	3#10, 1#10 GND.	
C16	3#12, 1#12 GND.	
C17	2#4/0, 1#4 GND.	
C18	2#10, 1#10 GND.	
C19	2#8, 1#10 GND.	
C20	4#10, 1#10 GND.	
C21	2/C #4, 1#10 GND.	

NOTES:
1.) POWER LINES TO INDIVIDUAL GATE CONTROLS TO BE PULLED THROUGH EXISTING 4" CONDUIT.

2.) * INDICATES PANEL PREFIX.

3.) CIRCUIT FROM ROADWAY LIGHTING CONTROL, SEE DM SIGN SCHEDULE

4.) NUMBER SHOWN ADJACENT TO SWING GATE MOTOR IDENTIFIES CIRCUIT NUMBER OF THREE PHASE BREAKER IN RESPECTIVE GATE HEATER PANEL. (LETTER INDICATES PHASE TO BE USED TO FEED THE 277V GATE HEATER. EXAMPLE: SWING GATE IS20 IS FED FROM PANEL HPIS, CIRCUIT NUMBER SEVEN, PHASE A (SWING GATES IS18 & IS19 ARE FED FROM PHASE B AND PHASE C OF THE SAME CIRCUIT). SEE TYP. WIRING DIAGRAM ON DWG. E-89.

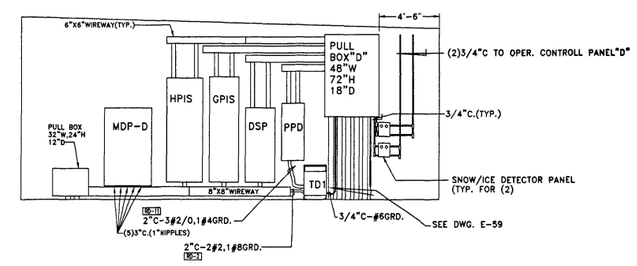

BLDG. D
SECTION A-A
SCALE: 1/4"=1'-0"

RECORD DRAWING
AUG 5 1997
Ken D. Bieber

NOTES:
1. THE ABOVE DRAWINGS REPRESENT AS LET DESIGN TO AID CONTRACTOR IN ASCERTAINING EXISTING CONDITIONS.

2. CONTRACTOR SHALL CONTACT IDOT D1 TO REQUEST THE MOST UP TO DATE RECORD DRAWINGS AVAILABLE AT THE TIME OF LETTING.

FOR INFORMATION ONLY

J:\293\Task-2\DGN\CADD Sheets\24_D160T93-sht-details065.dgn

SINGH
SINGH - ASSOCIATES, INC.
CONSULTING ENGINEERS

USER NAME = mgarvida	DESIGNED - DJ/AG	REVISED -	
FILE NAME = 124_D160T93-sht-details065	DRAWN - DS/AS	REVISED -	
PLOT SCALE = 2.0000000:1.000000	CHECKED - IY	REVISED -	
PLOT DATE = 06-MAY-2015 15:36	DATE - 5/6/2015	REVISED -	

STATE OF ILLINOIS
DEPARTMENT OF TRANSPORTATION

REMOTE BUILDING D SINGLE LINE DIAGRAM

SCALE: NTS | SHEET OF SHEETS | STA. TO STA.

F.A.I. RTE.	SECTION	COUNTY	TOTAL SHEETS	SHEET NO.
90/94	2012-0521	COOK	165	124

CONTRACT NO. 60T93
ILLINOIS FED. AID PROJECT

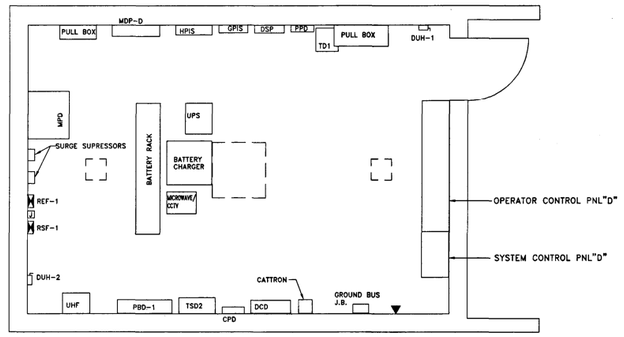

BLDG. D
EQUIPMENT LAYOUT

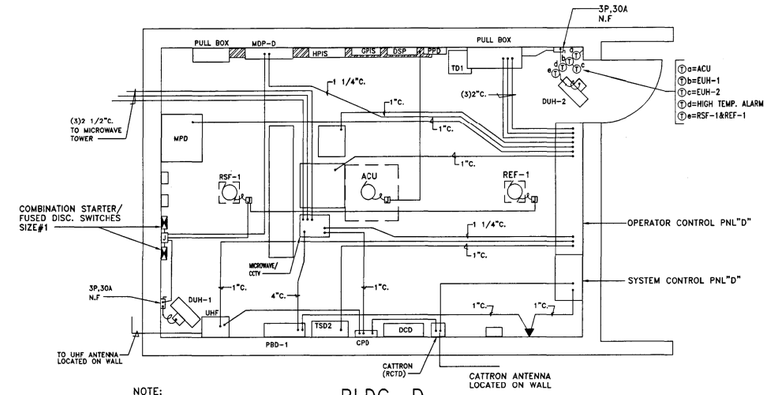

NOTE:
ALL CONDUITS ARE 3/4" UNLESS OTHERWISE NOTED

BLDG. D
COMMUNICATIONS AND HAVC

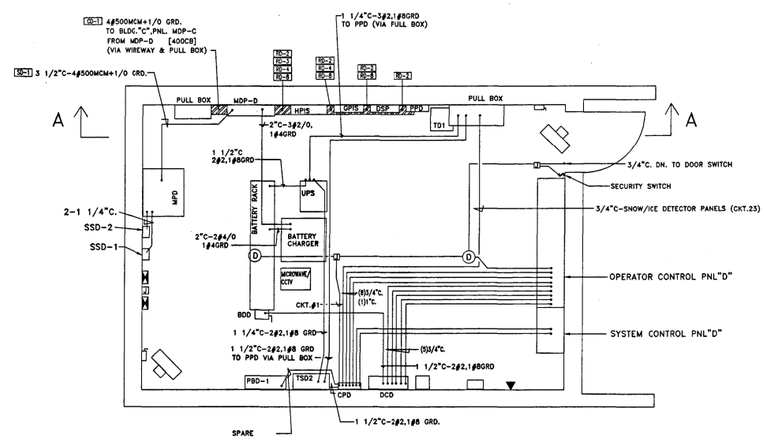

BLDG. D
FEEDERS AND POWER

RECORD DRAWING
AUG 5 1997
Ken D. Bieker

NOTES:

1. THE ABOVE DRAWINGS REPRESENT AS LET DESIGN TO AID CONTRACTOR IN ASCERTAINING EXISTING CONDITIONS.
2. CONTRACTOR SHALL CONTACT IDOT D1 TO REQUEST THE MOST UP TO DATE RECORD DRAWINGS AVAILABLE AT THE TIME OF LETTING.

FOR INFORMATION ONLY

SINGH
SINGH - ASSOCIATES, INC.
CONSULTING ENGINEERS

USER NAME = mgarvida	DESIGNED - DJ/AG	REVISED -	
FILE NAME = 125_D160T93-sht-details066	DRAWN - DS/AS	REVISED -	
PLOT SCALE = 2.000000:1.000000	CHECKED - IY	REVISED -	
PLOT DATE = 06-MAY-2015 15:37	DATE - 5/6/2015	REVISED -	

STATE OF ILLINOIS
DEPARTMENT OF TRANSPORTATION

REMOTE BUILDING D EQUIPMENT LAYOUT

SCALE: NTS | SHEET OF SHEETS | STA. TO STA.

F.A.I. RTE.	SECTION	COUNTY	TOTAL SHEETS	SHEET NO.
90/94	2012-0521	COOK	165	125

CONTRACT NO. 60T93
ILLINOIS FED. AID PROJECT

J:\293\Task-2\DGN\CADD Sheets\125_D160T93-sht-details066.dgn

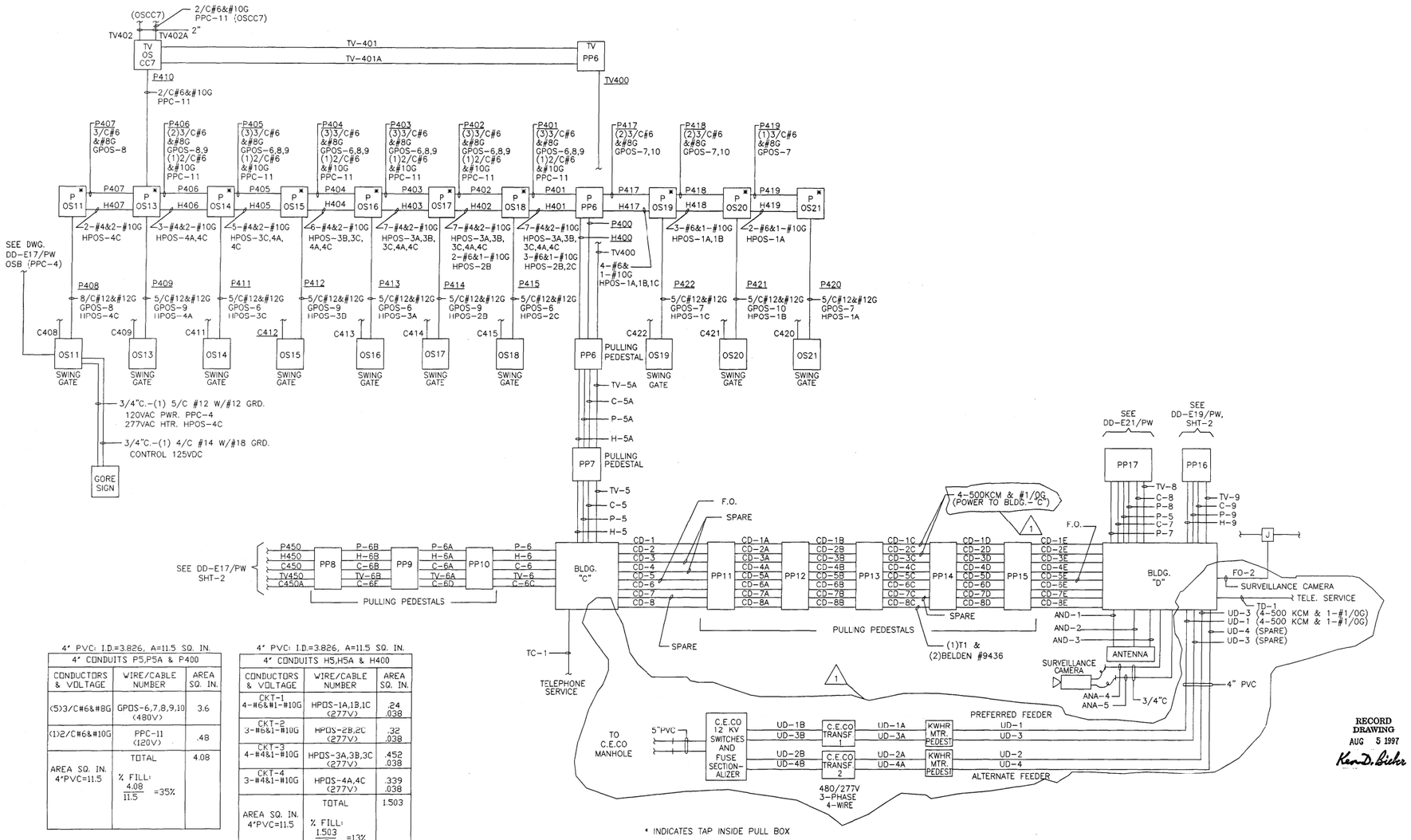

4" PVC: I.D.=3.826, A=11.5 SQ. IN.

4" CONDUITS P5,P5A & P400		
CONDUCTORS & VOLTAGE	WIRE/CABLE NUMBER	AREA SQ. IN.
(5)3/C#6&#8G	GPOS-6,7,8,9,10 (480V)	3.6
(1)2/C#6&#10G	PPC-11 (120V)	.48
AREA SQ. IN. 4"PVC=11.5	TOTAL % FILL: $\frac{4.08}{11.5}$ =35%	4.08

4" PVC: I.D.=3.826, A=11.5 SQ. IN.

4" CONDUITS H5,H5A & H400		
CONDUCTORS & VOLTAGE	WIRE/CABLE NUMBER	AREA SQ. IN.
CKT-1 4-#6&#1-#10G	HPOS-1A,1B,1C (277V)	.24 .038
CKT-2 3-#6&1-#10G	HPOS-2B,2C (277V)	.32 .038
CKT-3 4-#4&1-#10G	HPOS-3A,3B,3C (277V)	.452 .038
CKT-4 3-#4&1-#10G	HPOS-4A,4C (277V)	.339 .038
AREA SQ. IN. 4"PVC=11.5	TOTAL % FILL: $\frac{1.503}{11.5}$ =13%	1.503

RECORD DRAWING
AUG 5 1997
Ken D. Bicke

NOTES:

1. THE ABOVE DRAWINGS REPRESENT AS LET DESIGN TO AID CONTRACTOR IN ASCERTAINING EXISTING CONDITIONS.
2. CONTRACTOR SHALL CONTACT IDOT D1 TO REQUEST THE MOST UP TO DATE RECORD DRAWINGS AVAILABLE AT THE TIME OF LETTING.

FOR INFORMATION ONLY

SINGH
SINGH - ASSOCIATES, INC.
CONSULTING ENGINEERS

USER NAME = mgarvida	DESIGNED - DJ/AG	REVISED -	
FILE NAME = 126_D160T93-sht-details067	DRAWN - DS/AS	REVISED -	
PLOT SCALE = 2.000000:1.000000	CHECKED - IY	REVISED -	
PLOT DATE = 06-MAY-2015 15:38	DATE - 5/6/2015	REVISED -	

STATE OF ILLINOIS
DEPARTMENT OF TRANSPORTATION

REMOTE BUILDING C AND D INBOUND SLIP RAMP
POWER AND HEATER WIRING

SCALE: NTS | SHEET OF SHEETS | STA. TO STA.

F.A.I. RTE.	SECTION	COUNTY	TOTAL SHEETS	SHEET NO.
90/94	2012-0521	COOK	165	126
		CONTRACT NO. 60T93		
	ILLINOIS	FED. AID PROJECT		

J:\293\Task-2\DGN\CADD Sheets\126_D160T93-sht-details067.dgn

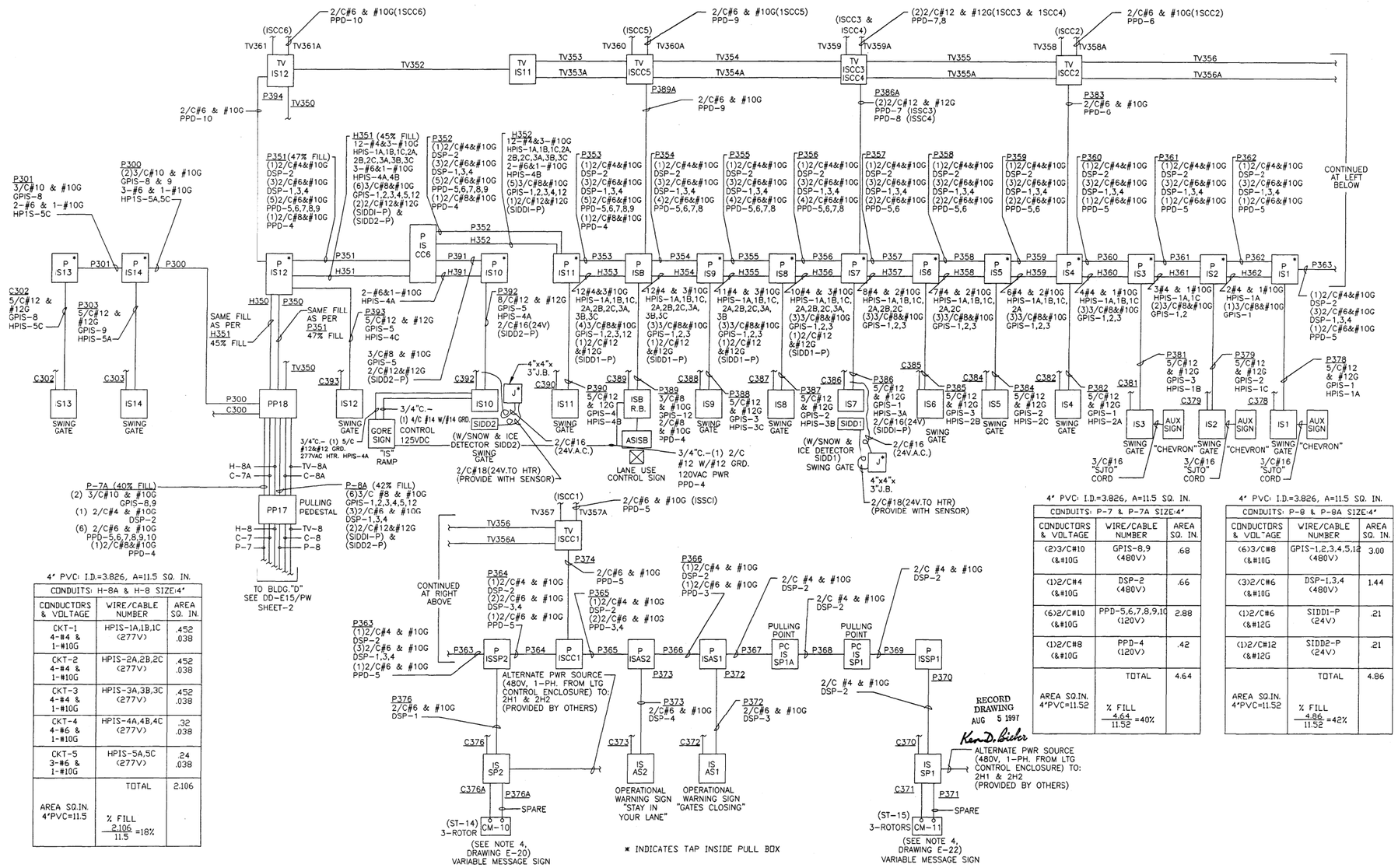

4" PVC: I.D.=3.826, A=11.5 SQ. IN.

CONDUITS: H-8A & H-8 SIZE:4"		
CONDUCTORS & VOLTAGE	WIRE/CABLE NUMBER	AREA SQ. IN.
CKT-1 4-#4 & 1-#10G	HPIS-1A,1B,1C (277V)	.452 .038
CKT-2 4-#4 & 1-#10G	HPIS-2A,2B,2C (277V)	.452 .038
CKT-3 4-#4 & 1-#10G	HPIS-3A,3B,3C (277V)	.452 .038
CKT-4 4-#6 & 1-#10G	HPIS-4A,4B,4C (277V)	.32 .038
CKT-5 3-#6 & 1-#10G	HPIS-5A,5C (277V)	.24 .038
AREA SQ.IN. 4"PVC=11.5	TOTAL % FILL $\frac{2.106}{11.5}$ =18%	2.106

4" PVC: I.D.=3.826, A=11.5 SQ. IN.

CONDUITS: P-7 & P-7A SIZE:4"		
CONDUCTORS & VOLTAGE	WIRE/CABLE NUMBER	AREA SQ. IN.
(2)3/C#10 (&#10G)	GPIS-8,9 (480V)	.68
(1)2/C#4 (&#10G)	DSP-2 (480V)	.66
(6)2/C#10 (&#10G)	PPD-5,6,7,8,9,10 (120V)	2.88
(1)2/C#8 (&#10G)	PPD-4 (120V)	.42
AREA SQ.IN. 4"PVC=11.52	TOTAL % FILL $\frac{4.64}{11.52}$ =40%	4.64

4" PVC: I.D.=3.826, A=11.5 SQ. IN.

CONDUITS: P-8 & P-8A SIZE:4"		
CONDUCTORS & VOLTAGE	WIRE/CABLE NUMBER	AREA SQ. IN.
(6)3/C#8 (&#10G)	GPIS-1,2,3,4,5,12 (480V)	3.00
(3)2/C#6 (&#10G)	DSP-1,3,4 (480V)	1.44
(1)2/C#6 (&#12G)	SIDDI-P (24V)	.21
(1)2/C#12 (&#12G)	SIDD2-P (24V)	.21
AREA SQ.IN. 4"PVC=11.52	TOTAL % FILL $\frac{4.86}{11.52}$ =42%	4.86

NOTES:

1. THE ABOVE DRAWINGS REPRESENT AS LET DESIGN TO AID CONTRACTOR IN ASCERTAINING EXISTING CONDITIONS.
2. CONTRACTOR SHALL CONTACT IDOT D1 TO REQUEST THE MOST UP TO DATE RECORD DRAWINGS AVAILABLE AT THE TIME OF LETTING.

FOR INFORMATION ONLY

SINGH
SINGH - ASSOCIATES, INC.
CONSULTING ENGINEERS

USER NAME = mgarvida	DESIGNED - DJ/AG	REVISED -	
FILE NAME = 127_D160T93-sht-details068	DRAWN - DS/AS	REVISED -	
PLOT SCALE = 2.0000000:1.000000	CHECKED - IY	REVISED -	
PLOT DATE = 06-MAY-2015 15:39	DATE - 5/6/2015	REVISED -	

STATE OF ILLINOIS
DEPARTMENT OF TRANSPORTATION

REMOTE BUILDING D INBOUND SLIP RAMP
POWER AND HEATER WIRING

SCALE: NTS | SHEET OF SHEETS | STA. TO STA.

F.A.I. RTE.	SECTION	COUNTY	TOTAL SHEETS	SHEET NO.
90/94	2012-0521	COOK	165	127
		CONTRACT NO. 60T93		
		ILLINOIS FED. AID PROJECT		

J:\293\Task-2\DGN\CADD Sheets\127_D160T93-sht-details068.dgn

GENERAL NOTES

1. DESIGNATIONS IN PARENTHESES AT CONTROL CABLE INDICATIONS ARE FOR CABLE IDENTIFICATION PURPOSES.
2. STRANDED CONDUCTOR CABLE SHALL BE TERMINATED BY LUGS, CUP WASHERS, OR PRESSURE TYPE CONNECTORS. STRANDED CABLES SHALL NOT BE WRAPPED AROUND SCREW TYPE TERMINALS.

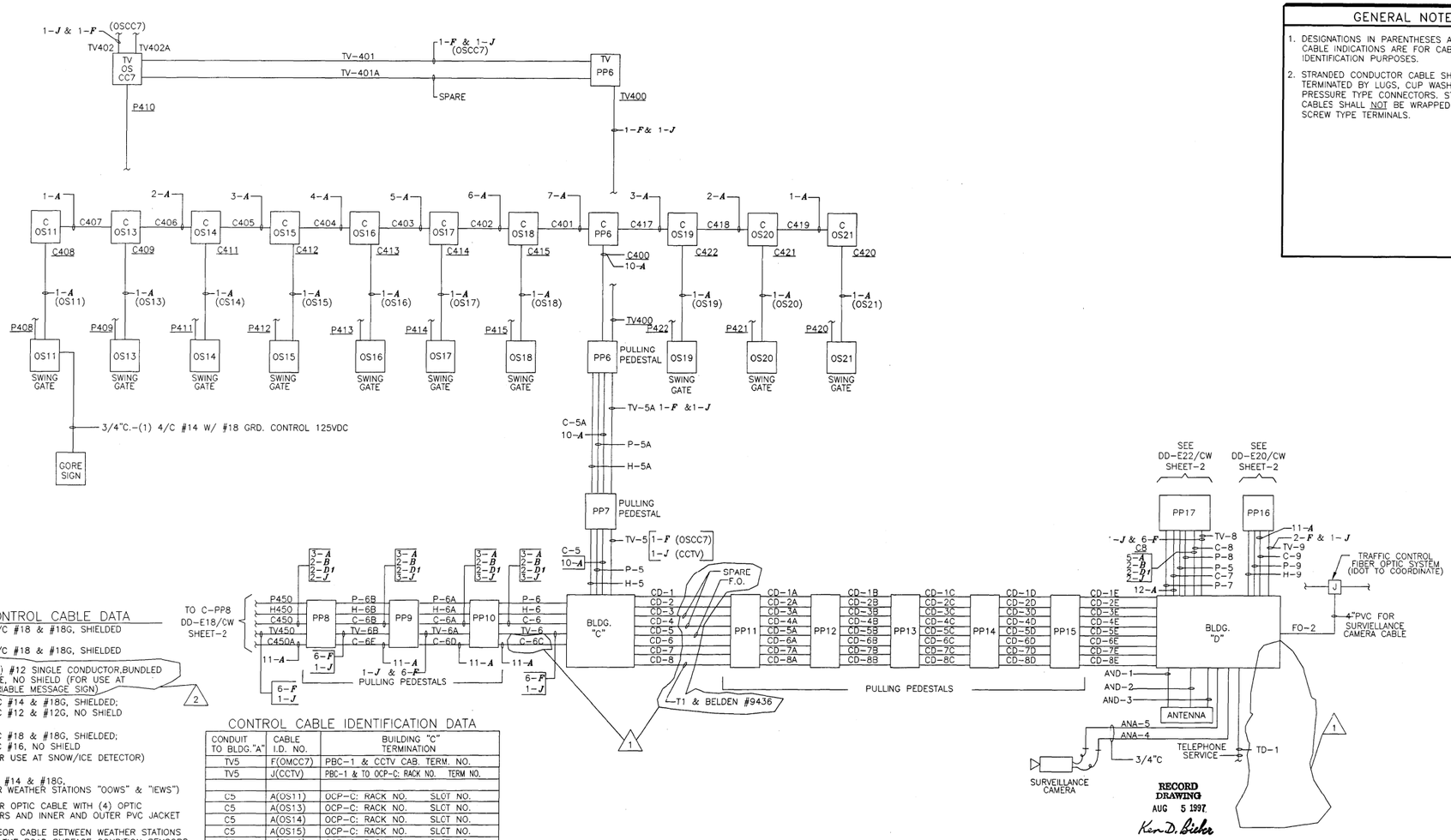

CONTROL CABLE DATA

- **A** – 20/C #18 & #18G, SHIELDED
- **B** – 30/C #18 & #18G, SHIELDED
- **C** – (51) #12 SINGLE CONDUCTOR,BUNDLED WIRE, NO SHIELD (FOR USE AT VARIABLE MESSAGE SIGN)
- **D1** – 4/C #14 & #18G, SHIELDED; 2/C #12 & #12G, NO SHIELD
- **D2** – 4/C #18 & #18G, SHIELDED; 2/C #16, NO SHIELD (FOR USE AT SNOW/ICE DETECTOR)
- **E** – 6/C #14 & #18G, (FOR WEATHER STATIONS "OOWS" & "IEWS")
- **F** – FIBER OPTIC CABLE WITH (4) OPTIC FIBERS AND INNER AND OUTER PVC JACKET
- **G** – SENSOR CABLE BETWEEN WEATHER STATIONS AND THE ROAD SURFACE CONDITION SENSORS (2000 FT. PROVIDED WITH SENSOR)
- **I** – CCTV CAMERA, POWER AND CONTROL CABLE (50 FT. PROVIDED WITH CAMERA)
- **J** – 3/C #14 & #18G, SHIELDED (CCTV WASHER/WIPER CONTROL & OPERATIONAL WARNING SIGNS)
- **T1**– TELEPHONE CABLE, (8) PAIR #18 AWG (TAMAQUA CAT.#)
- **T2**– TELEPHONE CABLE, (4) PAIR #18 AWG (TAMAQUA CAT.#)

CONTROL CABLE IDENTIFICATION DATA

CONDUIT TO BLDG."A"	CABLE I.D. NO.	BUILDING "C" TERMINATION
TV5	F(OMCC7)	PBC-1 & CCTV CAB. TERM. NO.
TV5	J(CCTV)	PBC-1 & TO OCP-C: RACK NO. TERM NO.
C5	A(OS11)	OCP-C: RACK NO. SLCT NO.
C5	A(OS13)	OCP-C: RACK NO. SLCT NO.
C5	A(OS14)	OCP-C: RACK NO. SLCT NO.
C5	A(OS15)	OCP-C: RACK NO. SLCT NO.
C5	A(OS16)	OCP-C: RACK NO. SLCT NO.
C5	A(OS17)	OCP-C: RACK NO. SLCT NO.
C5	A(OS18)	OCP-C: RACK NO. SLCT NO.
C5	A(OS19)	OCP-C: RACK NO. SLCT NO.
C5	A(OS20)	OCP-C: RACK NO. SLCT NO.
C5	A(OS21)	OCP-C: RACK NO. SLCT NO.

NOTES:

1. THE ABOVE DRAWINGS REPRESENT AS LET DESIGN TO AID CONTRACTOR IN ASCERTAINING EXISTING CONDITIONS.
2. CONTRACTOR SHALL CONTACT IDOT D1 TO REQUEST THE MOST UP TO DATE RECORD DRAWINGS AVAILABLE AT THE TIME OF LETTING.

FOR INFORMATION ONLY

J:\293\Task-2\DGN\CADD Sheets\128.D160T93-sht-details069.dgn

SINGH – SINGH - ASSOCIATES, INC. CONSULTING ENGINEERS

USER NAME = mgarvida	DESIGNED - DJ/AG	REVISED -	
FILE NAME = 128.D160T93-sht-details069	DRAWN - DS/AS	REVISED -	
PLOT SCALE = 2.000000:1.000000	CHECKED - IY	REVISED -	
PLOT DATE = 06-MAY-2015 15:40	DATE - 5/6/2015	REVISED -	

STATE OF ILLINOIS
DEPARTMENT OF TRANSPORTATION

REMOTE BUILDING C AND D INBOUND SLIP RAMP
CONTROL CABLE WIRING

SCALE: NTS | SHEET OF SHEETS | STA. TO STA.

F.A.I. RTE.	SECTION	COUNTY	TOTAL SHEETS	SHEET NO.
90/94	2012-0521	COOK	165	128
		CONTRACT NO. 60T93		
	ILLINOIS	FED. AID PROJECT		

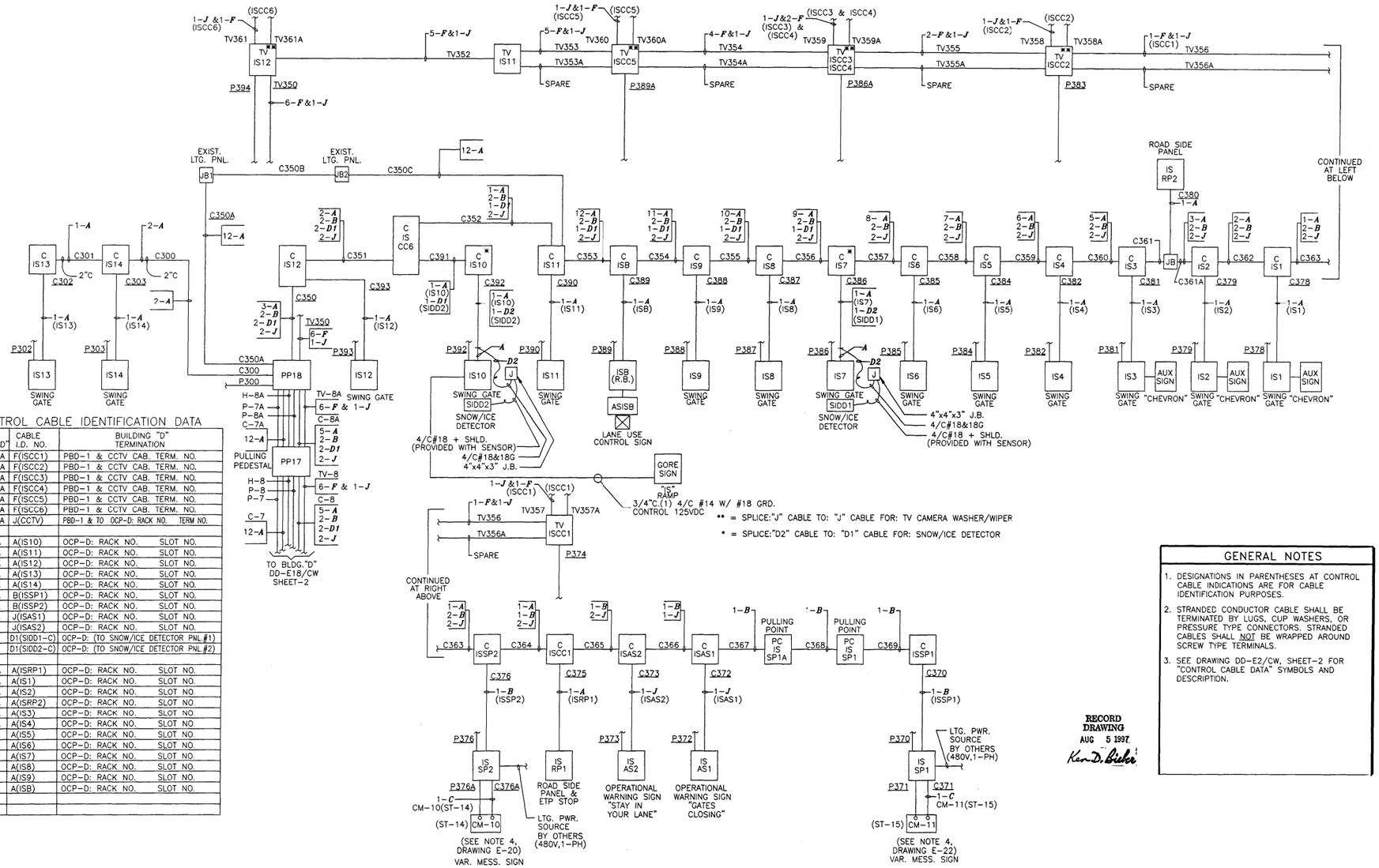

CONTROL CABLE IDENTIFICATION DATA

CONDUIT TO BLDG."D"	CABLE I.D. NO.	BUILDING "D" TERMINATION
TV8 & TV8A	F(ISCC1)	PBD-1 & CCTV CAB. TERM. NO.
TV8 & TV8A	F(ISCC2)	PBD-1 & CCTV CAB. TERM. NO.
TV8 & TV8A	F(ISCC3)	PBD-1 & CCTV CAB. TERM. NO.
TV8 & TV8A	F(ISCC4)	PBD-1 & CCTV CAB. TERM. NO.
TV8 & TV8A	F(ISCC5)	PBD-1 & CCTV CAB. TERM. NO.
TV8 & TV8A	F(ISCC6)	PBD-1 & CCTV CAB. TERM. NO.
TV8 & TV8A	J(CCTV)	PBD-1 & TO OCP-D: RACK NO. TERM NO.
C8 & C8A	A(IS10)	OCP-D: RACK NO. SLOT NO.
C8 & C8A	A(IS11)	OCP-D: RACK NO. SLOT NO.
C8 & C8A	A(IS12)	OCP-D: RACK NO. SLOT NO.
C8 & C8A	A(IS13)	OCP-D: RACK NO. SLOT NO.
C8 & C8A	A(IS14)	OCP-D: RACK NO. SLOT NO.
C8 & C8A	B(ISSP1)	OCP-D: RACK NO. SLOT NO.
C8 & C8A	B(ISSP2)	OCP-D: RACK NO. SLOT NO.
C8 & C8A	J(ISAS1)	OCP-D: RACK NO. SLOT NO.
C8 & C8A	J(ISAS2)	OCP-D: RACK NO. SLOT NO.
C8 & C8A	D1(SIDD1-C)	OCP-D: (TO SNOW/ICE DETECTOR PNL #1)
C8 & C8A	D1(SIDD2-C)	OCP-D: (TO SNOW/ICE DETECTOR PNL #2)
C7 & C7A	A(ISRP1)	OCP-D: RACK NO. SLOT NO.
C7 & C7A	A(IS1)	OCP-D: RACK NO. SLOT NO.
C7 & C7A	A(IS2)	OCP-D: RACK NO. SLOT NO.
C7 & C7A	A(ISRP2)	OCP-D: RACK NO. SLOT NO.
C7 & C7A	A(IS3)	OCP-D: RACK NO. SLOT NO.
C7 & C7A	A(IS4)	OCP-D: RACK NO. SLOT NO.
C7 & C7A	A(IS5)	OCP-D: RACK NO. SLOT NO.
C7 & C7A	A(IS6)	OCP-D: RACK NO. SLOT NO.
C7 & C7A	A(IS7)	OCP-D: RACK NO. SLOT NO.
C7 & C7A	A(IS8)	OCP-D: RACK NO. SLOT NO.
C7 & C7A	A(IS9)	OCP-D: RACK NO. SLOT NO.
C7 & C7A	A(ISB)	OCP-D: RACK NO. SLOT NO.

GENERAL NOTES

1. DESIGNATIONS IN PARENTHESES AT CONTROL CABLE INDICATIONS ARE FOR CABLE IDENTIFICATION PURPOSES.
2. STRANDED CONDUCTOR CABLE SHALL BE TERMINATED BY LUGS, CUP WASHERS, OR PRESSURE TYPE CONNECTORS. STRANDED CABLES SHALL NOT BE WRAPPED AROUND SCREW TYPE TERMINALS.
3. SEE DRAWING DD-E2/CW, SHEET-2 FOR "CONTROL CABLE DATA" SYMBOLS AND DESCRIPTION.

RECORD DRAWING
AUG 5 1997
Ken D. Bicker

NOTES:

1. THE ABOVE DRAWINGS REPRESENT AS LET DESIGN TO AID CONTRACTOR IN ASCERTAINING EXISTING CONDITIONS.
2. CONTRACTOR SHALL CONTACT IDOT D1 TO REQUEST THE MOST UP TO DATE RECORD DRAWINGS AVAILABLE AT THE TIME OF LETTING.

FOR INFORMATION ONLY

J:\293\Task-2\DGN\CADD Sheets\129_D160T93-sht-details070.dgn

SINGH
CONSULTING ENGINEERS
www.singhinc.com

USER NAME = mgarvida	DESIGNED - DJ/AG	REVISED -	
FILE NAME = 129_D160T93-sht-details070	DRAWN - DS/AS	REVISED -	
PLOT SCALE = 2.0000:1.000000	CHECKED - IY	REVISED -	
PLOT DATE = 06-MAY-2015 15:41	DATE - 5/6/2015	REVISED -	

STATE OF ILLINOIS
DEPARTMENT OF TRANSPORTATION

REMOTE BUILDING D INBOUND SLIP RAMP CONTROL CABLE WIRING

SCALE: NTS | SHEET OF SHEETS | STA. TO STA.

F.A.I. RTE.	SECTION	COUNTY	TOTAL SHEETS	SHEET NO.
90/94	2012-0521	COOK	165	129
		CONTRACT NO. 60T93		
	ILLINOIS	FED. AID PROJECT		

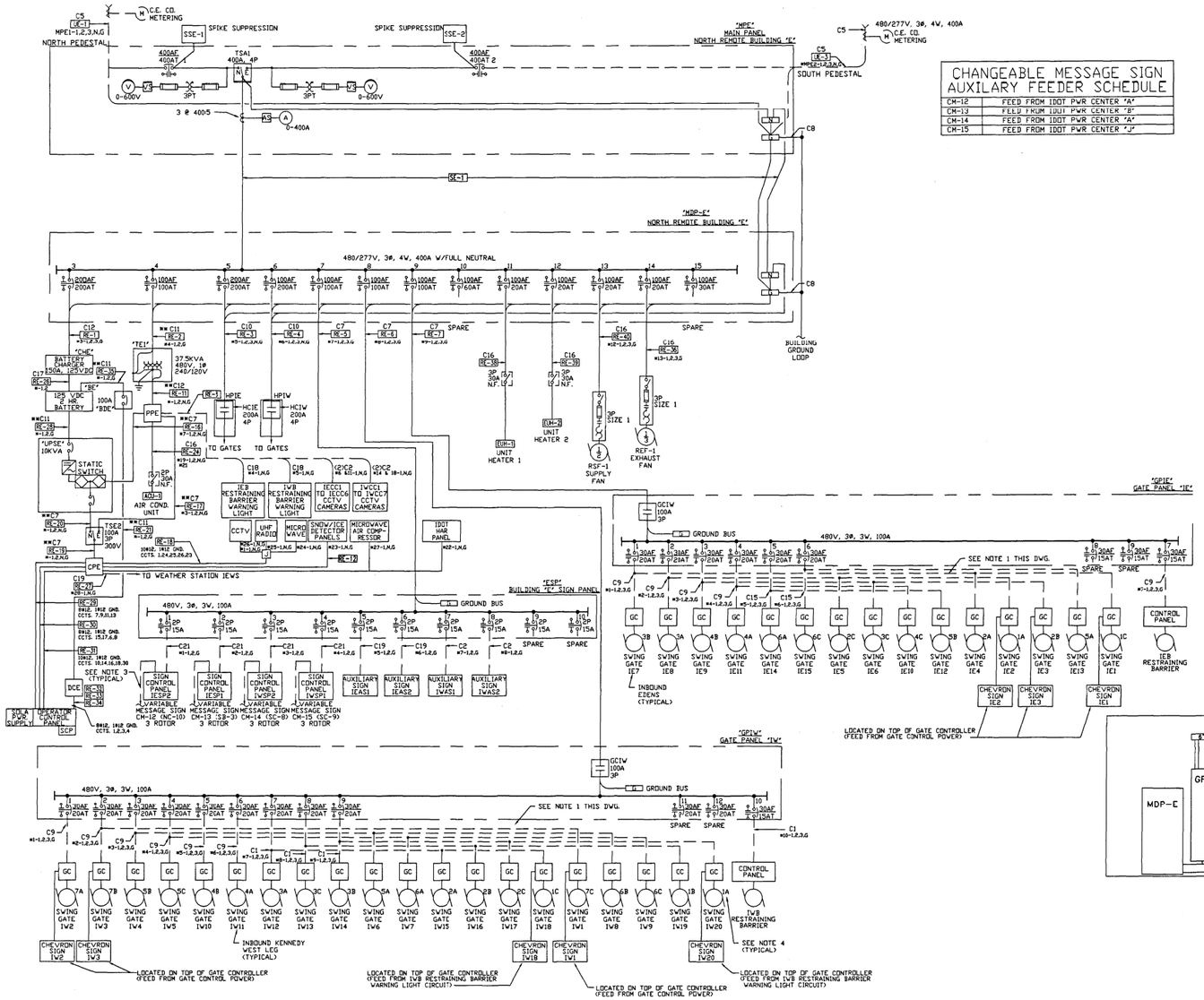

CHANGEABLE MESSAGE SIGN AUXILARY FEEDER SCHEDULE	
CM-12	FEED FROM IDOT PWR CENTER 'A'
CM-13	FEED FROM IDOT PWR CENTER 'B'
CM-14	FEED FROM IDOT PWR CENTER 'A'
CM-15	FEED FROM IDOT PWR CENTER 'J'

CABLE SCHEDULE		
TAG	NO. & WIRE SIZE	REMARKS (MULTI-CONDUCTOR CABLE)
C1	3#6, 1#10 GND. 1991 - 2021	
C2	2#6, 1#10 GND.	
C3	3#4, 1#6 GND.	
C4	2#1/0, 1#4 GND.	
C5	4#500MCM, 1#1/0 GND.	
C6	3#6, 1#6 GND.	
C7	3#2, 1#8 GND.**#2#2,1#8GND.	
C8	1#4/0 GROUND WIRE.	
C9	3#8, 1#10 GND.	
C10	4#3/0 1#6 GND.	
C11	2#2, 1#8 GND.**#2#1,1#8GND.	
C12	3#2/0 1#4 GND.**3#2,1#4GND.	
C13	2 SETS OF 4#250MCM, 1#2 GND.EA	
C14	3#1, 1#6 GND.	
C15	3#10, 1#10 GND.	
C16	3#12, 1#12 GND.	
C17	2#4/0, 1#4 GND.	
C18	2#10, 1#10 GND.	
C19	2#8, 1#10 GND.	
C20	4#10, 1#10 GND.	
C21	2/C #4, 1#10 GND.	

NOTES:
1.) POWER LINES TO INDIVIDUAL GATE CONTROLS TO BE PULLED THROUGH EXISTING 4" CONDUIT.
2.) * INDICATES PANEL PREFIX.
3.) CIRCUIT FROM ROADWAY LIGHTING CONTROL, SEE CM SIGN SCHEDULE.
4.) NUMBER SHOWN ADJACENT TO SWING GATE MOTOR IDENTIFIES CIRCUIT NUMBER OF THREE PHASE BREAKER IN RESPECTIVE GATE HEATER PANEL. LETTER INDICATES PHASE TO BE USED TO FEED THE 277V GATE HEATER. EXAMPLE: SWING GATE IW20 IS FED FROM PANEL HP1W, CIRCUIT NUMBER ONE, PHASE A (SWING GATES IW18 & IW19 ARE FED FROM PHASE B AND PHASE C OF THE SAME CIRCUIT). SEE TYP. WIRING DIAGRAM ON DWG. E-89.

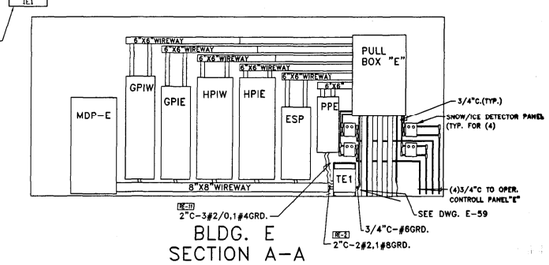

BLDG. E
SECTION A-A

NOTES:
1. THE ABOVE DRAWINGS REPRESENT AS LET DESIGN TO AID CONTRACTOR IN ASCERTAINING EXISTING CONDITIONS.
2. CONTRACTOR SHALL CONTACT IDOT DI TO REQUEST THE MOST UP TO DATE RECORD DRAWINGS AVAILABLE AT THE TIME OF LETTING.

FOR INFORMATION ONLY

J:\293\Task-2\DGN\CADD Sheets\130_D160T93-sht-details071.dgn

SINGH
CONSULTING ENGINEERS
www.singhinc.com

USER NAME = mgarvida	DESIGNED - DJ/AG	REVISED -	
FILE NAME = 130_D160T93-sht-details071	DRAWN - DS/AS	REVISED -	
PLOT SCALE = 2.0000000:1.000000	CHECKED - IY	REVISED -	
PLOT DATE = 06-MAY-2015 15:42	DATE - 5/6/2015	REVISED -	

STATE OF ILLINOIS
DEPARTMENT OF TRANSPORTATION

REMOTE BUILDING E SINGLE LINE DIAGRAM

SCALE: NTS | SHEET OF SHEETS | STA. TO STA.

F.A.I. RTE.	SECTION	COUNTY	TOTAL SHEETS	SHEET NO.
90/94	2012-0521	COOK	165	130
		CONTRACT NO. 60T93		
	ILLINOIS FED. AID PROJECT			

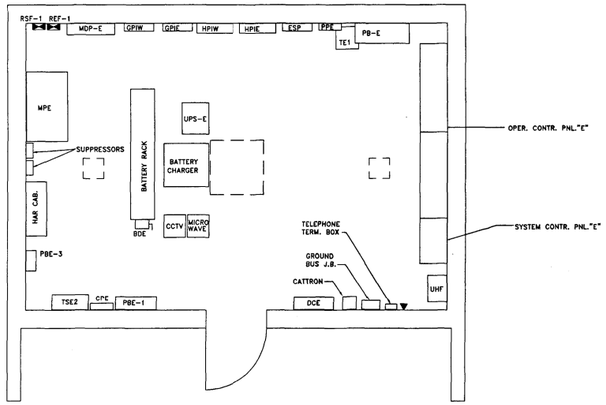

BLDG. E
EQUIPMENT LAYOUT

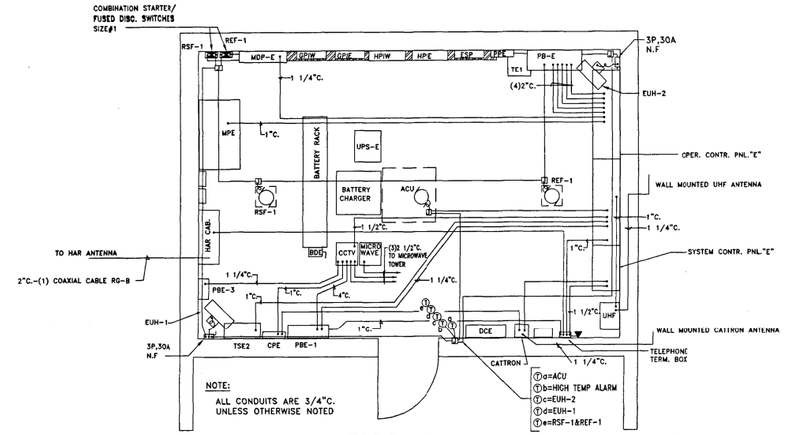

BLDG. E
COMMUNICATIONS
AND HVAC

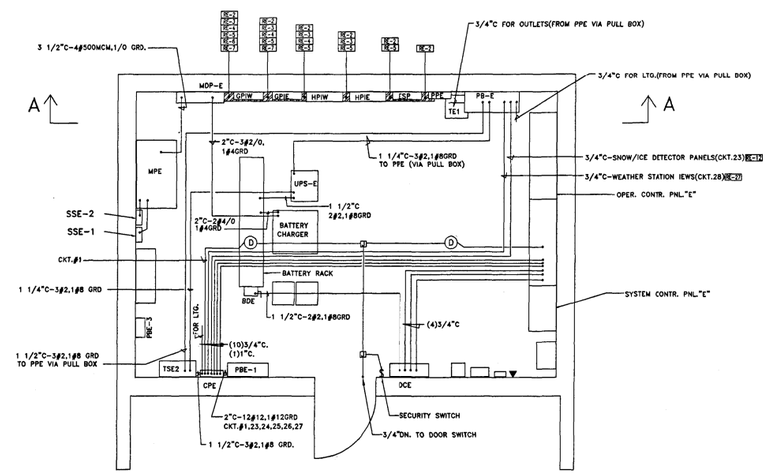

BLDG. E
FEEDERS AND POWER

RECORD DRAWING
AUG 5 1997
Ken D. Bishop

NOTES:

1. THE ABOVE DRAWINGS REPRESENT AS LET DESIGN TO AID CONTRACTOR IN ASCERTAINING EXISTING CONDITIONS.
2. CONTRACTOR SHALL CONTACT IDOT D1 TO REQUEST THE MOST UP TO DATE RECORD DRAWINGS AVAILABLE AT THE TIME OF LETTING.

FOR INFORMATION ONLY

J:\293\Task-2\DGN\CADD Sheets\131_D160T93-sht-details072.dgn

SINGH CONSULTING ENGINEERS www.singhinc.com	USER NAME = mgarvida	DESIGNED - DJ/AG	REVISED -	STATE OF ILLINOIS DEPARTMENT OF TRANSPORTATION	REMOTE BUILDING E EQUIPMENT LAYOUT	F.A.I. RTE.	SECTION	COUNTY	TOTAL SHEETS	SHEET NO.
	FILE NAME = 131_D160T93-sht-details072	DRAWN - DS/AS	REVISED -			90/94	2012-0521	COOK	165	131
	PLOT SCALE = 2.0000:1.000000	CHECKED - IY	REVISED -					CONTRACT NO. 60T93		
	PLOT DATE = 06-MAY-2015 15:43	DATE - 5/6/2015	REVISED -		SCALE: NTS / SHEET OF SHEETS / STA. TO STA.		ILLINOIS	FED. AID PROJECT		

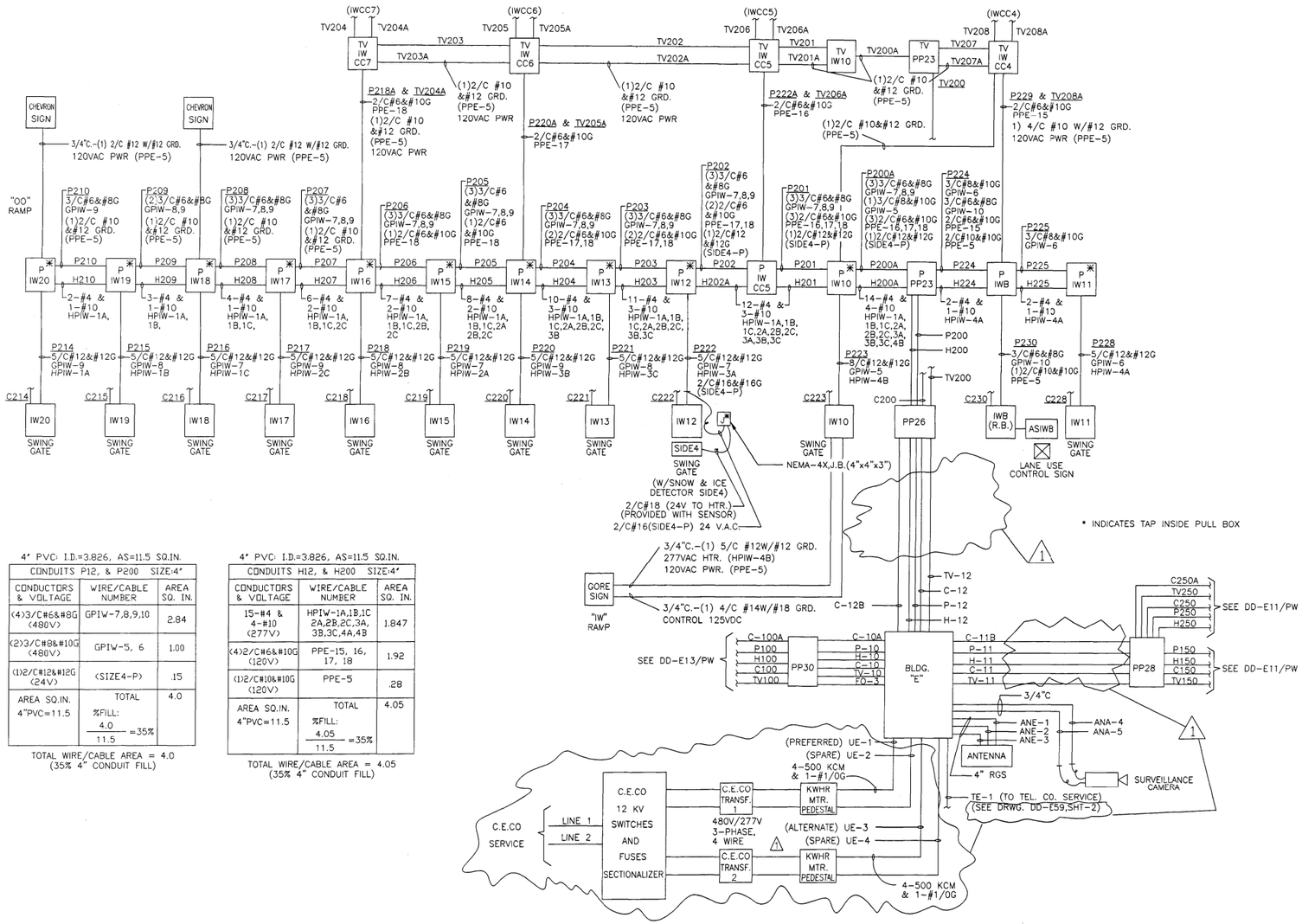

4" PVC: I.D.=3.826, AS=11.5 SQ.IN.

CONDUITS P12, & P200 SIZE:4"		
CONDUCTORS & VOLTAGE	WIRE/CABLE NUMBER	AREA SQ. IN.
(4)3/C#6&#8G (480V)	GPIW-7,8,9,10	2.84
(2)3/C#8&#10G (480V)	GPIW-5, 6	1.00
(1)2/C#12&#12G (24V)	(SIZE4-P)	.15
AREA SQ.IN. 4"PVC=11.5	TOTAL %FILL: $\frac{4.0}{11.5}$ =35%	4.0

TOTAL WIRE/CABLE AREA = 4.0
(35% 4" CONDUIT FILL)

4" PVC: I.D.=3.826, AS=11.5 SQ.IN.

CONDUITS H12, & H200 SIZE:4"		
CONDUCTORS & VOLTAGE	WIRE/CABLE NUMBER	AREA SQ. IN.
15-#4 & 4-#10 (277V)	HPIW-1A,1B,1C 2A,2B,2C,3A, 3B,3C,4A,4B	1.847
(4)2/C#6&#10G (120V)	PPE-15, 16, 17, 18	1.92
(1)2/C#10&#10G (120V)	PPE-5	.28
AREA SQ.IN. 4"PVC=11.5	TOTAL %FILL: $\frac{4.05}{11.5}$ =35%	4.05

TOTAL WIRE/CABLE AREA = 4.05
(35% 4" CONDUIT FILL)

RECORD DRAWING
AUG 5 1997
Ken D. Bicks

NOTES:

1. THE ABOVE DRAWINGS REPRESENT AS LET DESIGN TO AID CONTRACTOR IN ASCERTAINING EXISTING CONDITIONS.
2. CONTRACTOR SHALL CONTACT IDOT D1 TO REQUEST THE MOST UP TO DATE RECORD DRAWINGS AVAILABLE AT THE TIME OF LETTING.

FOR INFORMATION ONLY

J:\293\Task-2\DGN\CADD Sheets\32_D160T93-sht-details073.dgn

SINGH
CONSULTING ENGINEERS
www.singhinc.com

USER NAME = mgarvida	DESIGNED - DJ/AG	REVISED -	
FILE NAME = 132_D160T93-sht-details073	DRAWN - DS/AS	REVISED -	
PLOT SCALE = 2.0000000:1.000000	CHECKED - IY	REVISED -	
PLOT DATE = 06-MAY-2015 15:43	DATE - 5/6/2015	REVISED -	

STATE OF ILLINOIS
DEPARTMENT OF TRANSPORTATION

REMOTE BUILDING E INBOUND KENNEDY POWER AND HEATER WIRING

SCALE: NTS | SHEET OF SHEETS | STA. TO STA.

F.A.I. RTE.	SECTION	COUNTY	TOTAL SHEETS	SHEET NO.
90/94	2012-0521	COOK	165	132
		CONTRACT NO. 60T93		
		ILLINOIS FED. AID PROJECT		

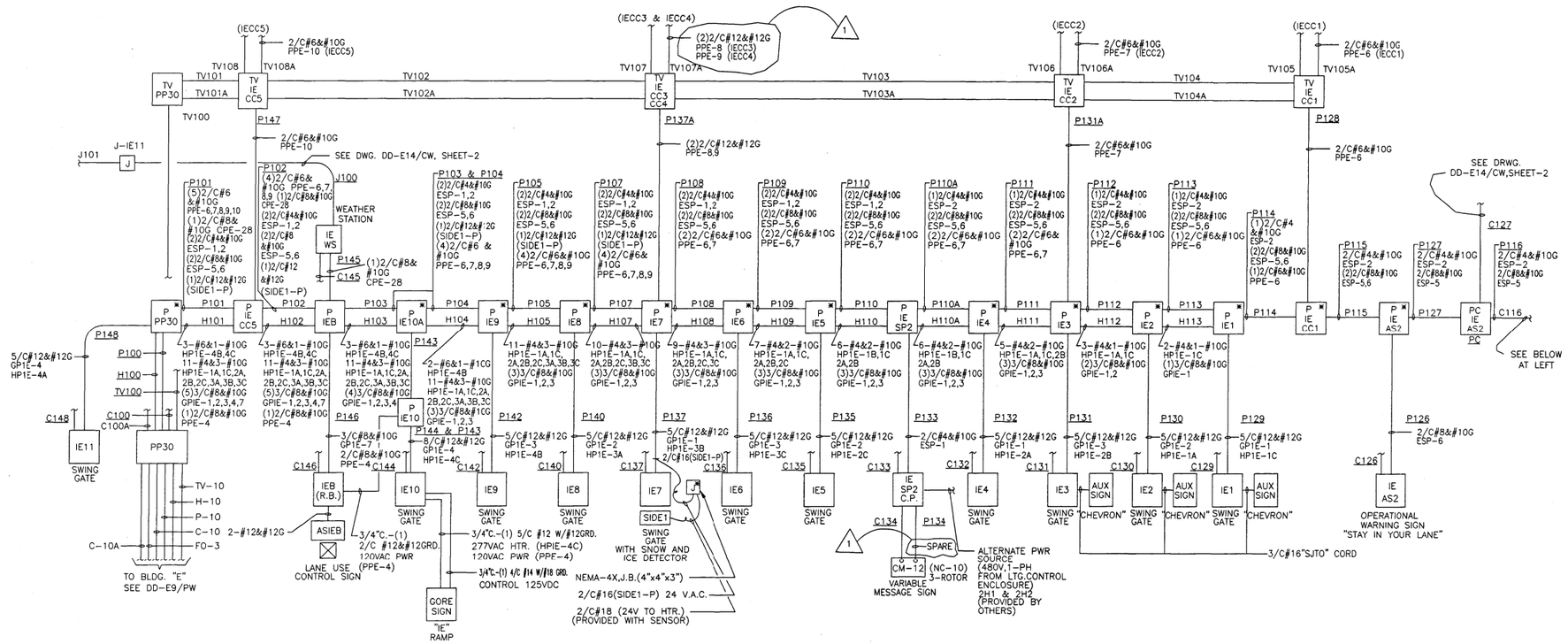

4" PVC: I.D.=3.826, AS=11.5 SQ. IN.

4" CONDUITS P10 & P100		
CONDUCTORS & VOLTAGE	WIRE/CABLE NUMBER	AREA SQ. IN.
(2)2/C#4&#10G	ESP-1,2 (480V)	1.32
(2)2/C#8&#10G	ESP-5,6 (480V)	.65
(5)2/C#6&#10G	PPE-6,7,8,9,10 (120)	2.40
(1)2/C#8&#10G	CPE-28 (120V)	.42
(1)2/C#12&#12G	(SIDE1-P) (24V)	.15
	TOTAL	4.94
AREA SQ. IN. 4" PVC=11.5	% FILL $\frac{4.94}{11.52}$ =43%	

TOTAL WIRE/CABLE AREA = 4.94
(43% 4" CONDUIT FILL)

4" PVC: I.D.=3.826, A=11.5 SQ. IN.

4" CONDUITS H10 & H100		
CONDUCTORS & VOLTAGE	WIRE/CABLE NUMBER	AREA SQ. IN.
CKT-1 3-#4&1-#10G	HP1E-1A,1C (277V)	.339 .038
CKT.-2 4-#4&1-#10G	HP1E-2A,2B,2C (277V)	.452 .038
CKT-3 4-#4&1-#10G	HP1E-3A,3B,3C (277V)	.452 .038
CKT-4 4-#6&1-#10G	HP1E-4A,4B,4C (277V)	.32 .038
(5)3/C#8&#10G	GPIE-1,2,3,4,7 (480V)	2.5
(1)2/C#8&#10G	PPE-4 (120V)	.42
	TOTAL	4.635
AREA SQ. IN. 4" PVC=11.5	% FILL $\frac{4.635}{11.5}$ =40%	

TOTAL WIRE/CABLE AREA = 4.635
(40% 4" CONDUIT FILL)

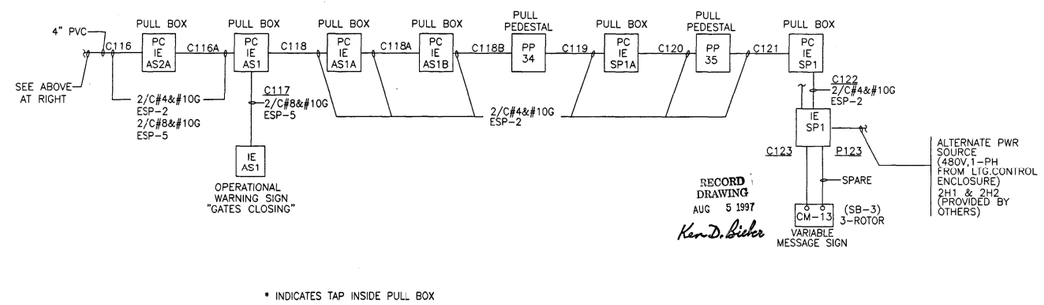

* INDICATES TAP INSIDE PULL BOX

NOTES:

1. THE ABOVE DRAWINGS REPRESENT AS LET DESIGN TO AID CONTRACTOR IN ASCERTAINING EXISTING CONDITIONS.
2. CONTRACTOR SHALL CONTACT IDOT D1 TO REQUEST THE MOST UP TO DATE RECORD DRAWINGS AVAILABLE AT THE TIME OF LETTING.

FOR INFORMATION ONLY

SINGH
CONSULTING ENGINEERS
www.singhinc.com

USER NAME = mgarvida	DESIGNED - DJ/AG	REVISED -	
FILE NAME = 133_D160T93-sht-details074	DRAWN - DS/AS	REVISED -	
PLOT SCALE = 2.0000000:1.000000	CHECKED - IY	REVISED -	
PLOT DATE = 06-MAY-2015 15:44	DATE - 5/6/2015	REVISED -	

STATE OF ILLINOIS
DEPARTMENT OF TRANSPORTATION

REMOTE BUILDING E INBOUND EDENS POWER AND HEATER WIRING

SCALE: NTS | SHEET OF SHEETS | STA. TO STA.

F.A.I. RTE.	SECTION	COUNTY	TOTAL SHEETS	SHEET NO.
90/94	2012-0521	COOK	165	133
		CONTRACT NO. 60T93		
	ILLINOIS FED. AID PROJECT			

J:\293\Task-2\DGN\CADD Sheets\133_D160T93-sht-details074.dgn

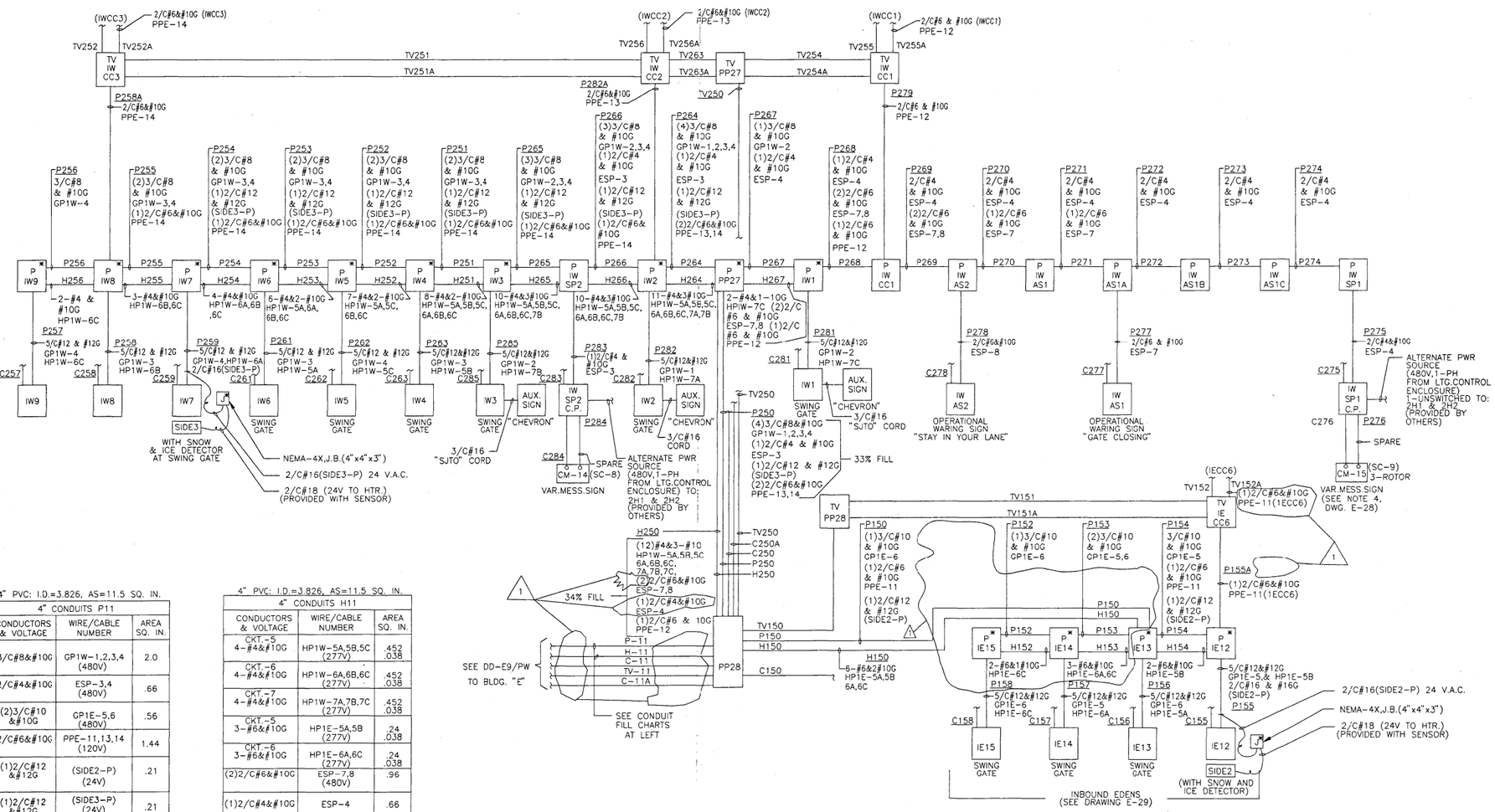

4" PVC: I.D.=3.826, AS=11.5 SQ. IN.

4" CONDUITS P11		
CONDUCTORS & VOLTAGE	WIRE/CABLE NUMBER	AREA SQ. IN.
(4)3/C#8&#10G	GP1W-1,2,3,4 (480V)	2.0
(1)2/C#4&#10G	ESP-3,4 (480V)	.66
(2)3/C#10 &#10G	GP1E-5,6 (480V)	.56
(3)2/C#6&#10G	PPE-11,13,14 (120V)	1.44
(1)2/C#12 &#12G	(SIDE2-P) (24V)	.21
(1)2/C#12 &#12G	(SIDE3-P) (24V)	.21
AREA SQ.IN. 4"PVC=11.5	TOTAL %FILL: $\frac{4.51}{11.5}$ =40%	4.51

TOTAL WIRE/CABLE AREA = 4.51
(40% 4" CONDUIT FILL)

4" PVC: I.D.=3.826, AS=11.5 SQ. IN.

4" CONDUITS H11		
CONDUCTORS & VOLTAGE	WIRE/CABLE NUMBER	AREA SQ. IN.
CKT.-5 4-#4&#10G	HP1W-5A,5B,5C (277V)	.452 .038
CKT.-6 4-#4&#10G	HP1W-6A,6B,6C (277V)	.452 .038
CKT.-7 4-#4&#10G	HP1W-7A,7B,7C (277V)	.452 .038
CKT.-5 3-#6&#10G	HP1E-5A,5B (277V)	.24 .038
CKT.-6 3-#6&#10G	HP1E-6A,6C (277V)	.24 .038
(2)2/C#6&#10G	ESP-7,8 (480V)	.96
(1)2/C#4&#10G	ESP-4	.66
(3)2/C#6&#10G	PPE-12,13,14 (120V)	1.44
AREA SQ.IN. 4"PVC=11.5	TOTAL %FILL: $\frac{5.08}{11.5}$ =44%	5.08

TOTAL WIRE/CABLE AREA = 5.08
(44% 4" CONDUIT FILL)

* INDICATES TAP INSIDE PULL BOX

RECORD
DRAWING
NOV 14 1997

NOTES:

1. THE ABOVE DRAWINGS REPRESENT AS LET DESIGN TO AID CONTRACTOR IN ASCERTAINING EXISTING CONDITIONS.
2. CONTRACTOR SHALL CONTACT IDOT D1 TO REQUEST THE MOST UP TO DATE RECORD DRAWINGS AVAILABLE AT THE TIME OF LETTING.

FOR INFORMATION ONLY

J:\293\Task-2\DGN\CADD Sheets\134_D160T93-sht-details075.dgn

SINGH
CONSULTING ENGINEERS
www.singhinc.com

USER NAME = mgarvida	DESIGNED - DJ/AG	REVISED -	
FILE NAME = 134_D160T93-sht-details075	DRAWN - DS/AS	REVISED -	
PLOT SCALE = 2.000000:1.000000	CHECKED - IY	REVISED -	
PLOT DATE = 06-MAY-2015 15:45	DATE - 5/6/2015	REVISED -	

STATE OF ILLINOIS
DEPARTMENT OF TRANSPORTATION

REMOTE BUILDING E KENNEDY AND INBOUND EDENS
POWER AND HEATER WIRING

SCALE: NTS | SHEET OF SHEETS | STA. TO STA.

F.A.I. RTE.	SECTION	COUNTY	TOTAL SHEETS	SHEET NO.
90/94	2012-0521	COOK	165	134

CONTRACT NO. 60T93

ILLINOIS FED. AID PROJECT

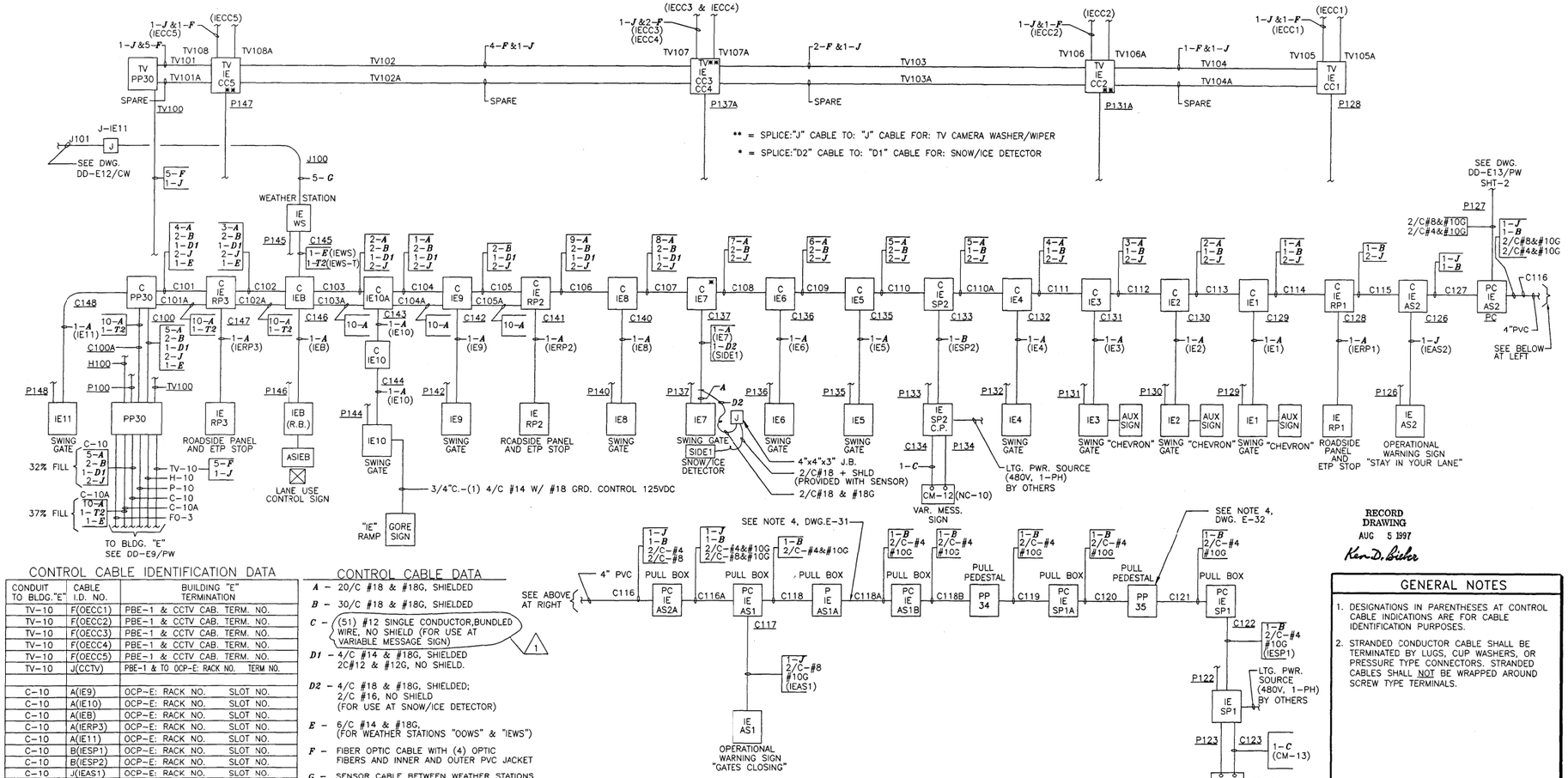

RECORD DRAWING
AUG 5 1997
Ken D. Lieber

CONTROL CABLE IDENTIFICATION DATA

CONDUIT TO BLDG."E"	CABLE I.D. NO.	BUILDING "E" TERMINATION
TV-10	F(OECC1)	PBE-1 & CCTV CAB. TERM. NO.
TV-10	F(OECC2)	PBE-1 & CCTV CAB. TERM. NO.
TV-10	F(OECC3)	PBE-1 & CCTV CAB. TERM. NO.
TV-10	F(OECC4)	PBE-1 & CCTV CAB. TERM. NO.
TV-10	F(OECC5)	PBE-1 & CCTV CAB. TERM. NO.
TV-10	J(CCTV)	PBE-1 & TO OCP-E: RACK NO. TERM NO.
C-10	A(IE9)	OCP-E: RACK NO. SLOT NO.
C-10	A(IE10)	OCP-E: RACK NO. SLOT NO.
C-10	A(IEB)	OCP-E: RACK NO. SLOT NO.
C-10	A(IERP3)	OCP-E: RACK NO. SLOT NO.
C-10	A(IE11)	OCP-E: RACK NO. SLOT NO.
C-10	B(IESP1)	OCP-E: RACK NO. SLOT NO.
C-10	B(IESP2)	OCP-E: RACK NO. SLOT NO.
C-10	J(IEAS1)	OCP-E: RACK NO. SLOT NO.
C-10	J(IEAS2)	OCP-E: RACK NO. SLOT NO.
C-10	D1(SIDE1-C)	OCP-E: (TO SNOW/ICE DETECTOR PNL#1)
C-10A	A(IERP1)	OCP-E: RACK NO. SLOT NO.
C-10A	A(IE1)	OCP-E: RACK NO. SLOT NO.
C-10A	A(IE2)	OCP-E: RACK NO. SLOT NO.
C-10A	A(IE3)	OCP-E: RACK NO. SLOT NO.
C-10A	A(IE4)	OCP-E: RACK NO. SLOT NO.
C-10A	A(IERP2)	OCP-E: RACK NO. SLOT NO.
C-10A	A(IE5)	OCP-E: RACK NO. SLOT NO.
C-10A	A(IE6)	OCP-E: RACK NO. SLOT NO.
C-10A	A(IE7)	OCP-E: RACK NO. SLOT NO.
C-10A	A(IE8)	OCP-E: RACK NO. SLOT NO.
C-10A	E(IEWS)	OCP-E: RACK NO. SLOT NO.
C-10A	T2(IEWS-T)	OCP-E: (TO TEL. J.B. AND TTCE)

CONTROL CABLE DATA

A – 20/C #18 & #18G, SHIELDED

B – 30/C #18 & #18G, SHIELDED

C – (51) #12 SINGLE CONDUCTOR,BUNDLED WIRE, NO SHIELD (FOR USE AT VARIABLE MESSAGE SIGN) 1

D1 – 4/C #14 & #18G, SHIELDED 2C#12 & #12G, NO SHIELD.

D2 – 4/C #18 & #18G, SHIELDED; 2/C #16, NO SHIELD (FOR USE AT SNOW/ICE DETECTOR)

E – 6/C #14 & #18G, (FOR WEATHER STATIONS "OOWS" & "IEWS")

F – FIBER OPTIC CABLE WITH (4) OPTIC FIBERS AND INNER AND OUTER PVC JACKET

G – SENSOR CABLE BETWEEN WEATHER STATIONS AND THE ROAD SURFACE CONDITION SENSORS (2000 FT. PROVIDED WITH SENSOR)

I – CCTV CAMERA, POWER AND CONTROL CABLE (50 FT. PROVIDED WITH CAMERA)

J – 3/C #14 & #18G, SHIELDED (CCTV WASHER/WIPER CONTROL & OPERATIONAL WARNING SIGNS)

T1– TELEPHONE CABLE, (8) PAIR #18 AWG (TAMAQUA CAT.#)

T2– TELEPHONE CABLE, (4) PAIR #18 AWG (TAMAQUA CAT.#)

GENERAL NOTES

1. DESIGNATIONS IN PARENTHESES AT CONTROL CABLE INDICATIONS ARE FOR CABLE IDENTIFICATION PURPOSES.
2. STRANDED CONDUCTOR CABLE SHALL BE TERMINATED BY LUGS, CUP WASHERS, OR PRESSURE TYPE CONNECTORS. STRANDED CABLES SHALL NOT BE WRAPPED AROUND SCREW TYPE TERMINALS.

NOTES:

1. THE ABOVE DRAWINGS REPRESENT AS LET DESIGN TO AID CONTRACTOR IN ASCERTAINING EXISTING CONDITIONS.
2. CONTRACTOR SHALL CONTACT IDOT D1 TO REQUEST THE MOST UP TO DATE RECORD DRAWINGS AVAILABLE AT THE TIME OF LETTING.

FOR INFORMATION ONLY

J:\293\Task-2\DGN\CADD Sheets\135_D160T93-sht-details076.dgn

SINGH
CONSULTING ENGINEERS
www.singhinc.com

USER NAME = mgarvida	DESIGNED - DJ/AG	REVISED -	
FILE NAME = 135_D160T93-sht-details076	DRAWN - DS/AS	REVISED -	
PLOT SCALE = 2.0000000:1.000000	CHECKED - IY	REVISED -	
PLOT DATE = 06-MAY-2015 15:46	DATE - 5/6/2015	REVISED -	

STATE OF ILLINOIS
DEPARTMENT OF TRANSPORTATION

REMOTE BUILDING E INBOUND EDENS CONTROL CABLE WIRING

SCALE: NTS | SHEET OF SHEETS | STA. TO STA.

F.A.I. RTE.	SECTION	COUNTY	TOTAL SHEETS	SHEET NO.
90/94	2012-0521	COOK	165	135
		CONTRACT NO. 60T93		
	ILLINOIS FED. AID PROJECT			

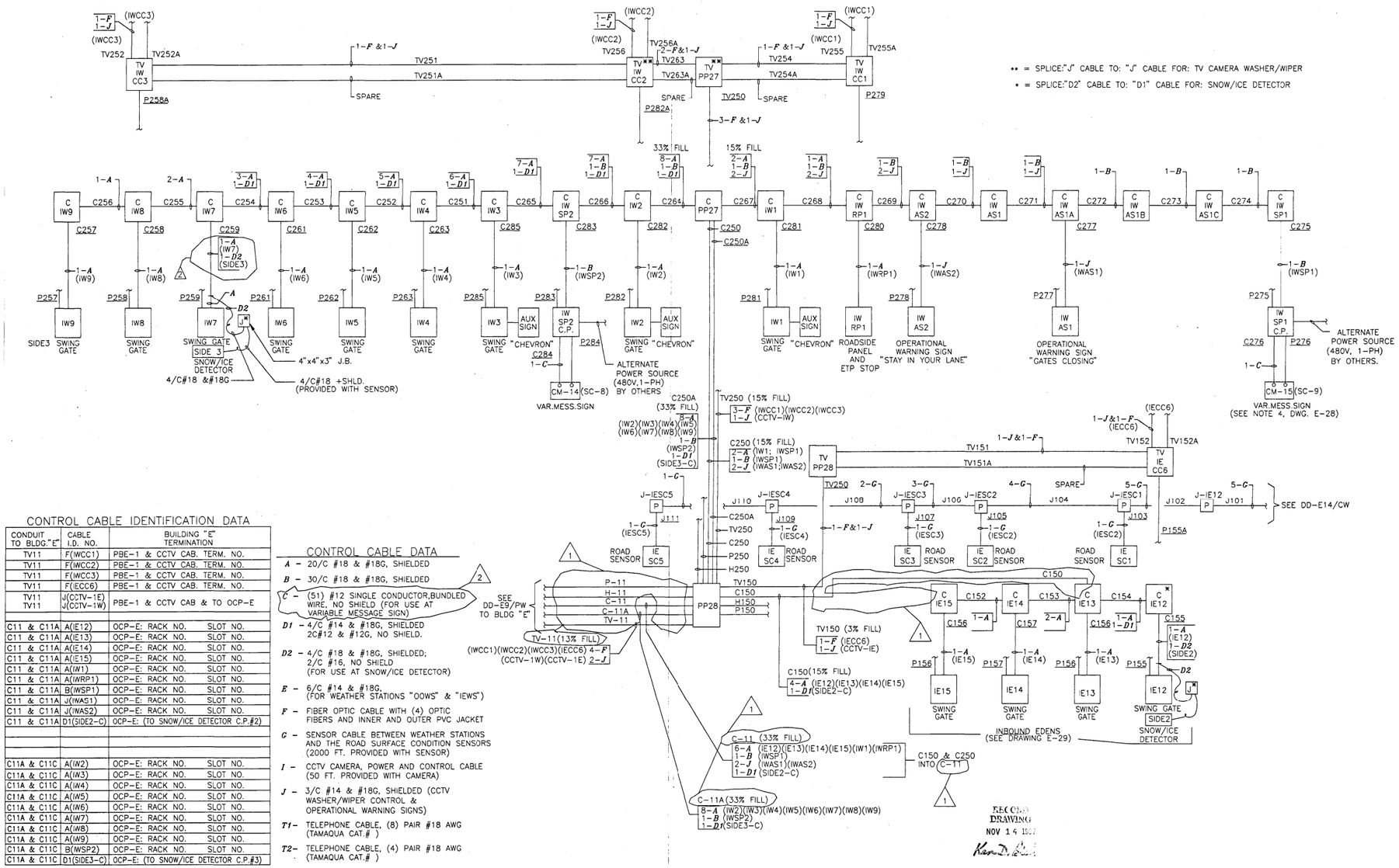

CONTROL CABLE IDENTIFICATION DATA

CONDUIT TO BLDG."E"	CABLE I.D. NO.	BUILDING "E" TERMINATION
TV11	F(IWCC1)	PBE-1 & CCTV CAB. TERM. NO.
TV11	F(IWCC2)	PBE-1 & CCTV CAB. TERM. NO.
TV11	F(IWCC3)	PBE-1 & CCTV CAB. TERM. NO.
TV11	F(IECC6)	PBE-1 & CCTV CAB. TERM. NO.
TV11 TV11	J(CCTV-1E) J(CCTV-1W)	PBE-1 & CCTV CAB & TO OCP-E
C11 & C11A	A(IE12)	OCP-E: RACK NO. SLOT NO.
C11 & C11A	A(IE13)	OCP-E: RACK NO. SLOT NO.
C11 & C11A	A(IE14)	OCP-E: RACK NO. SLOT NO.
C11 & C11A	A(IE15)	OCP-E: RACK NO. SLOT NO.
C11 & C11A	A(IW1)	OCP-E: RACK NO. SLOT NO.
C11 & C11A	A(IWRP1)	OCP-E: RACK NO. SLOT NO.
C11 & C11A	B(IWSP1)	OCP-E: RACK NO. SLOT NO.
C11 & C11A	J(IWAS1)	OCP-E: RACK NO. SLOT NO.
C11 & C11A	J(IWAS2)	OCP-E: RACK NO. SLOT NO.
C11 & C11A	D1(SIDE2-C)	OCP-E: (TO SNOW/ICE DETECTOR C.P.#2)
C11A & C11C	A(IW2)	OCP-E: RACK NO. SLOT NO.
C11A & C11C	A(IW3)	OCP-E: RACK NO. SLOT NO.
C11A & C11C	A(IW4)	OCP-E: RACK NO. SLOT NO.
C11A & C11C	A(IW5)	OCP-E: RACK NO. SLOT NO.
C11A & C11C	A(IW6)	OCP-E: RACK NO. SLOT NO.
C11A & C11C	A(IW7)	OCP-E: RACK NO. SLOT NO.
C11A & C11C	A(IW8)	OCP-E: RACK NO. SLOT NO.
C11A & C11C	A(IW9)	OCP-E: RACK NO. SLOT NO.
C11A & C11C	B(IWSP2)	OCP-E: RACK NO. SLOT NO.
C11A & C11C	D1(SIDE3-C)	OCP-E: (TO SNOW/ICE DETECTOR C.P.#3)

CONTROL CABLE DATA

A – 20/C #18 & #18G, SHIELDED

B – 30/C #18 & #18G, SHIELDED

C – (51) #12 SINGLE CONDUCTOR,BUNDLED WIRE, NO SHIELD (FOR USE AT VARIABLE MESSAGE SIGN)

D1 – 4/C #14 & #18G, SHIELDED 2C#12 & #12G, NO SHIELD.

D2 – 4/C #18 & #18G, SHIELDED; 2/C #16, NO SHIELD (FOR USE AT SNOW/ICE DETECTOR)

E – 6/C #14 & #18G, (FOR WEATHER STATIONS "OOWS" & "IEWS")

F – FIBER OPTIC CABLE WITH (4) OPTIC FIBERS AND INNER AND OUTER PVC JACKET

G – SENSOR CABLE BETWEEN WEATHER STATIONS AND THE ROAD SURFACE CONDITION SENSORS (2000 FT. PROVIDED WITH SENSOR)

I – CCTV CAMERA, POWER AND CONTROL CABLE (50 FT. PROVIDED WITH CAMERA)

J – 3/C #14 & #18G, SHIELDED (CCTV WASHER/WIPER CONTROL & OPERATIONAL WARNING SIGNS)

T1– TELEPHONE CABLE, (8) PAIR #18 AWG (TAMAQUA CAT.#)

T2– TELEPHONE CABLE, (4) PAIR #18 AWG (TAMAQUA CAT.#)

NOTES:

1. THE ABOVE DRAWINGS REPRESENT AS LET DESIGN TO AID CONTRACTOR IN ASCERTAINING EXISTING CONDITIONS.
2. CONTRACTOR SHALL CONTACT IDOT D1 TO REQUEST THE MOST UP TO DATE RECORD DRAWINGS AVAILABLE AT THE TIME OF LETTING.

FOR INFORMATION ONLY

J:\293\Task-2\DGN\CADD Sheets\136_D160T93-sht-details077.dgn

SINGH
CONSULTING ENGINEERS
www.singhinc.com

USER NAME = mgarvida	DESIGNED - DJ/AG	REVISED -	
FILE NAME = 136_D160T93-sht-details077	DRAWN - DS/AS	REVISED -	
PLOT SCALE = 2.0000000:1.000000	CHECKED - IY	REVISED -	
PLOT DATE = 06-MAY-2015 15:47	DATE - 5/6/2015	REVISED -	

STATE OF ILLINOIS
DEPARTMENT OF TRANSPORTATION

REMOTE BUILDING E INBOUND KENNEDY AND INBOUND EDENS CONTROL CABLE WIRING

SCALE: NTS | SHEET OF SHEETS | STA. TO STA.

F.A.I. RTE.	SECTION	COUNTY	TOTAL SHEETS	SHEET NO.
90/94	2012-0521	COOK	165	136
		CONTRACT NO. 60T93		
	ILLINOIS FED. AID PROJECT			

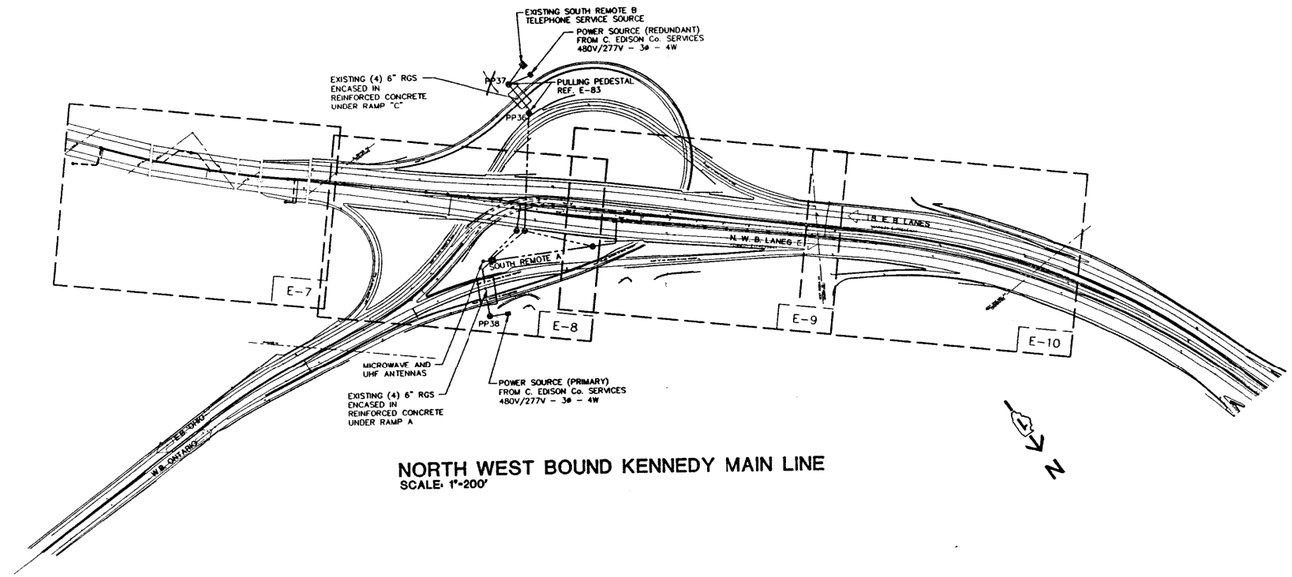

NORTH WEST BOUND KENNEDY MAIN LINE
SCALE: 1"=200'

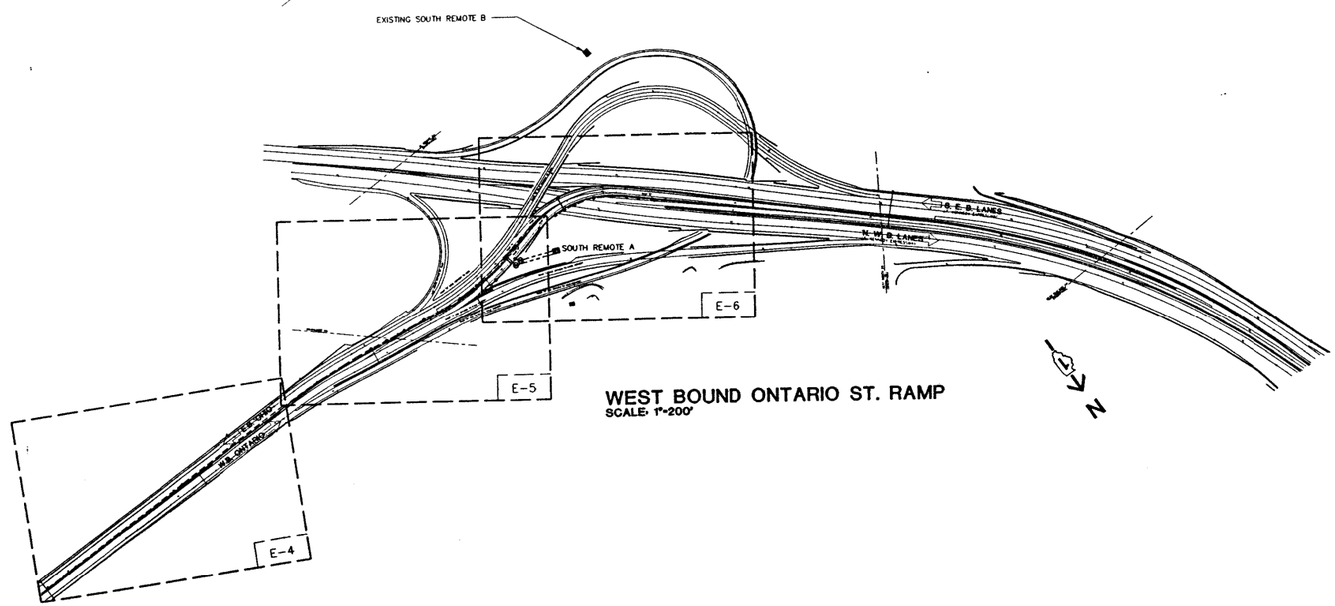

WEST BOUND ONTARIO ST. RAMP
SCALE: 1"=200'

NOTES:

1. THE ABOVE DRAWINGS REPRESENT AS LET DESIGN TO AID CONTRACTOR IN ASCERTAINING EXISTING CONDITIONS.
2. CONTRACTOR SHALL CONTACT IDOT D1 TO REQUEST THE MOST UP TO DATE RECORD DRAWINGS AVAILABLE AT THE TIME OF LETTING.

FOR INFORMATION ONLY

J:\293\Task-2\DGN\CADD Sheets\137_D160T93-sht-details078.dgn

SINGH
CONSULTING ENGINEERS
www.singhinc.com

USER NAME = mgarvida	DESIGNED - DJ/AG	REVISED -	
FILE NAME = 137_D160T93-sht-details078	DRAWN - DS/AS	REVISED -	
PLOT SCALE = 2.0000000:1.000000	CHECKED - IY	REVISED -	
PLOT DATE = 06-MAY-2015 15:48	DATE - 5/6/2015	REVISED -	

STATE OF ILLINOIS
DEPARTMENT OF TRANSPORTATION

ONTARIO ST. AND N.W.B. KENNEDY ORIENTATION PLAN

SCALE: NTS | SHEET OF SHEETS | STA. TO STA.

F.A.I. RTE.	SECTION	COUNTY	TOTAL SHEETS	SHEET NO.
90/94	2012-0521	COOK	165	137

CONTRACT NO. 60T93

ILLINOIS FED. AID PROJECT

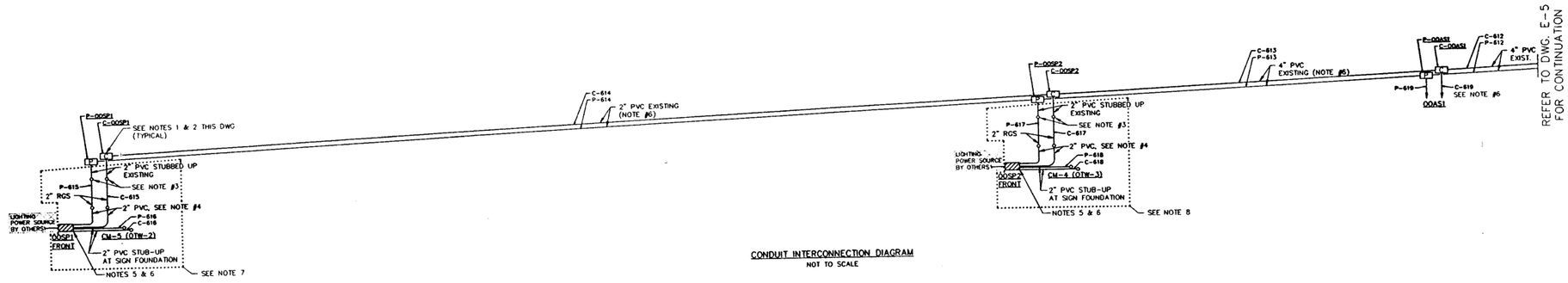

CONDUIT INTERCONNECTION DIAGRAM
NOT TO SCALE

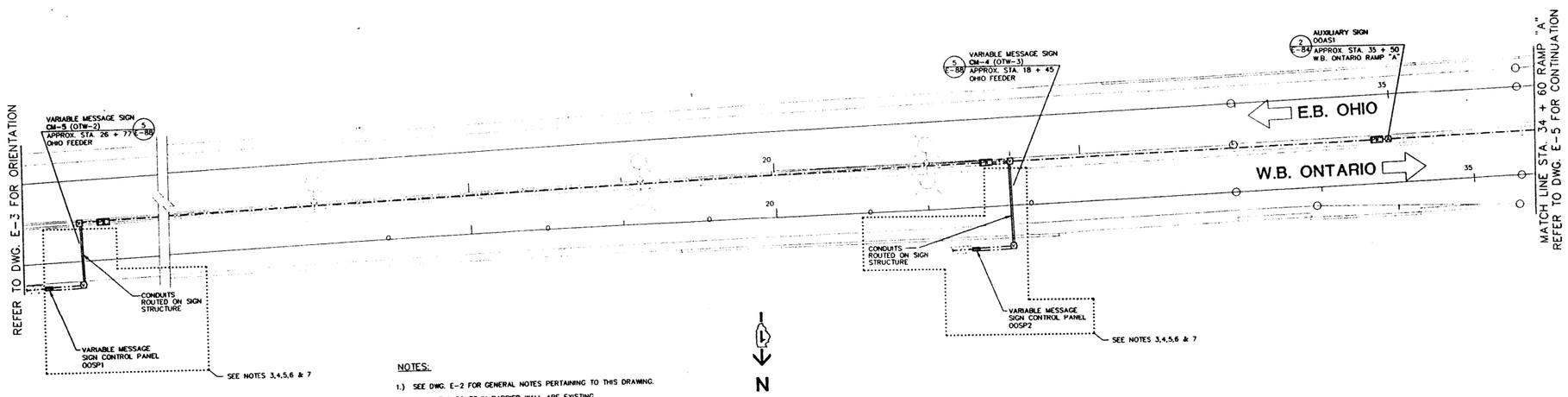

NOTES:

1.) SEE DWG. E-2 FOR GENERAL NOTES PERTAINING TO THIS DRAWING.

2.) CONDUIT & BOXES IN BARRIER WALL ARE EXISTING (INSTALLED UNDER REVCON CONTRACT).

3.) PROVIDE PVC TO H.W. RIGID CONDUIT FITTINGS & ROUTE CONDUITS INSIDE THE VARIABLE SIGN TRUSS UP/ACROSS & DOWN THE SIGN.

4.) PROVIDE H.W. RIGID CONDUIT TO PVC FITTING & ROUTE CONCRETE ENCASED PVC TO VARIABLE MESSAGE SIGN CONTROL PANEL (SEE DETAIL ON DWG. E-88).

5.) PROVIDE CONCRETE PAD, CONTROL PANEL CONDUITS & WIRES AS SHOWN. COORDINATE THE INSTALLATION OF THE LIGHTING CIRCUIT (BY OTHERS) INTO THE CONTROL PANEL. (SEE DWG. E-88 FOR LIGHTING CIRCUIT CONDUIT IN PAD).

6.) UNLESS OTHERWISE INDICATED, PROVIDE ALL CABLE & WIRE FOR WORK SHOWN ON THIS SHEET, REGARDLESS OF THE CONTRACT UNDER WHICH THE RACEWAY IS PROVIDED.

7.) UNLESS OTHERWISE INDICATED, CONDUIT & BOXES NOT SHOWN WITHIN BOXED-OUT DASHED LINE IS EXISTING, OR WILL BE PROVIDED UNDER CONTRACT BY OTHERS.

NOTES:

1. THE ABOVE DRAWINGS REPRESENT AS LET DESIGN TO AID CONTRACTOR IN ASCERTAINING EXISTING CONDITIONS.

2. CONTRACTOR SHALL CONTACT IDOT D1 TO REQUEST THE MOST UP TO DATE RECORD DRAWINGS AVAILABLE AT THE TIME OF LETTING.

FOR INFORMATION ONLY

J:\293\Task-2\DGN\CADD Sheets\138_D160T93-sht-details079.dgn

SINGH
CONSULTING ENGINEERS
www.singhinc.com

USER NAME = mgarvida	DESIGNED - DJ/AG	REVISED -	
FILE NAME = 138_D160T93-sht-details079	DRAWN - DS/AS	REVISED -	
PLOT SCALE = 2.000000:1.000000	CHECKED - IY	REVISED -	
PLOT DATE = 06-MAY-2015 15:49	DATE - 5/6/2015	REVISED -	

STATE OF ILLINOIS
DEPARTMENT OF TRANSPORTATION

W.B. ONTARIO /OHIO FEEDER POWER & CONTROL PLAN

SCALE: NTS | SHEET OF SHEETS | STA. TO STA.

F.A.I. RTE.	SECTION	COUNTY	TOTAL SHEETS	SHEET NO.
90/94	2012-0521	COOK	165	138
		CONTRACT NO. 60T93		
	ILLINOIS	FED. AID PROJECT		

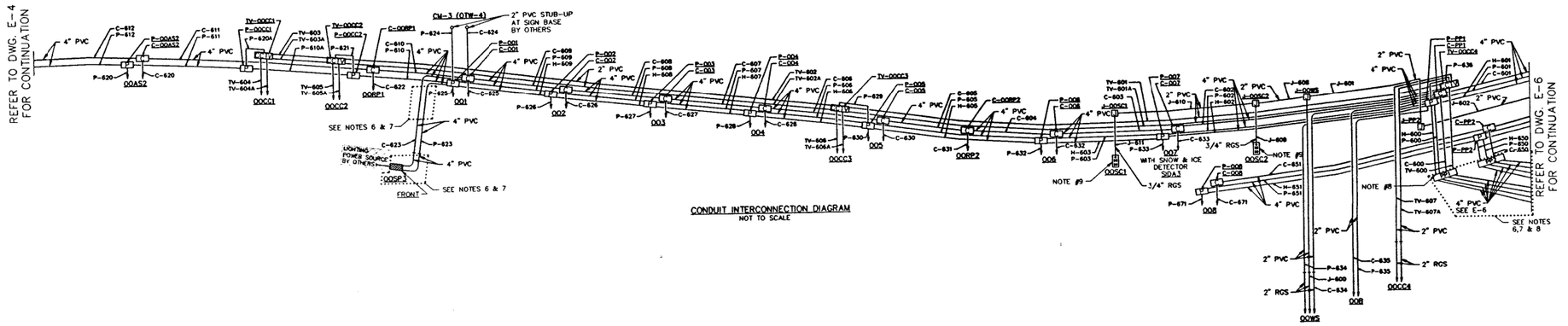

CONDUIT INTERCONNECTION DIAGRAM
NOT TO SCALE

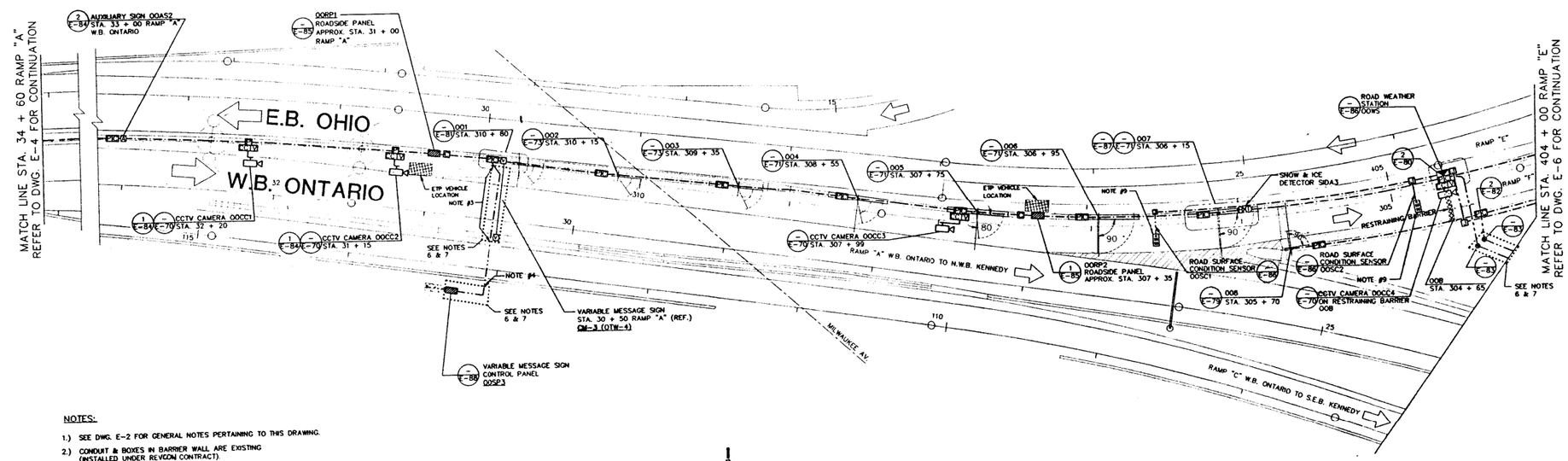

NOTES:

1.) SEE DWG. E-2 FOR GENERAL NOTES PERTAINING TO THIS DRAWING.

2.) CONDUIT & BOXES IN BARRIER WALL ARE EXISTING (INSTALLED UNDER REVCON CONTRACT).

3.) LOCATE EXISTING 2"-4" PVC CONDUITS @ BOTH SIDES OF W.B. ONTARIO AND INSTALL NEW 2"-4" PVC BETWEEN THE POINTS

4.) LOCATE EXISTING PVC CONDUITS, CONNECT 2"-4" PVC'S AND ROUTE CONCRETE ENCASED PVC TO VARIABLE MESSAGE SIGN CONTROL PANEL (SEE DETAIL ON DWG. E-88).

5.) PROVIDE CONCRETE PAD, CONTROL PANEL CONDUITS & WIRES AS SHOWN. COORDINATE THE INSTALLATION OF THE LIGHTING CIRCUIT (BY OTHERS) INTO THE CONTROL PANEL (SEE DWG. E-88 FOR LIGHTING CIRCUIT CONDUIT IN PAD).

6.) UNLESS OTHERWISE INDICATED, PROVIDE ALL CABLE & WIRE FOR WORK SHOWN ON THIS SHEET, REGARDLESS OF THE CONTRACT UNDER WHICH THE RACEWAY IS PROVIDED.

7.) UNLESS OTHERWISE INDICATED, CONDUIT & BOXES NOT SHOWN WITHIN BOXED-OUT DASHED LINE IS EXISTING, OR WILL BE PROVIDED UNDER CONTRACT BY OTHERS.

8.) LOCATE EXISTING PVC CONDUITS, PROVIDE H.W. RIGID CONNECTORS AND INSTALL H.W. RIGID CONDUIT, PULL BOXES INCLUDING CONCRETE PADS (SEE DWG E-83). PROVIDE NEW PVC CONCRETE ENCASED CONDUITS TO BUILDING "A" AS SHOWN.

9.) LOCATE PERMANENT SURVEY MARKER & UNCOVER ROADWAY TO LOCATE EXISTING SENSOR CONDUIT. INSTALL ROADWAY SENSOR AND CABLE AS SHOWN ON DWG. E-88.

N

NOTES:

1. THE ABOVE DRAWINGS REPRESENT AS LET DESIGN TO AID CONTRACTOR IN ASCERTAINING EXISTING CONDITIONS.
2. CONTRACTOR SHALL CONTACT IDOT D1 TO REQUEST THE MOST UP TO DATE RECORD DRAWINGS AVAILABLE AT THE TIME OF LETTING.

FOR INFORMATION ONLY

J:\293\Task-2\DGN\CADD Sheets\139_D160T93-sht-details080.dgn

SINGH CONSULTING ENGINEERS www.singhinc.com	USER NAME = mgarvida	DESIGNED - DJ/AG	REVISED -	STATE OF ILLINOIS DEPARTMENT OF TRANSPORTATION	W.B. ONTARIO /OHIO FEEDER POWER & CONTROL PLAN
	FILE NAME = 139_D160T93-sht-details080	DRAWN - DS/AS	REVISED -		
	PLOT SCALE = 2.000000:1.000000	CHECKED - IY	REVISED -		
	PLOT DATE = 06-MAY-2015 15:50	DATE - 5/6/2015	REVISED -		SCALE: NTS SHEET OF SHEETS STA. TO STA.

F.A.I. RTE.	SECTION	COUNTY	TOTAL SHEETS	SHEET NO.
90/94	2012-0521	COOK	165	139
		CONTRACT NO. 60T93		
	ILLINOIS	FED. AID PROJECT		

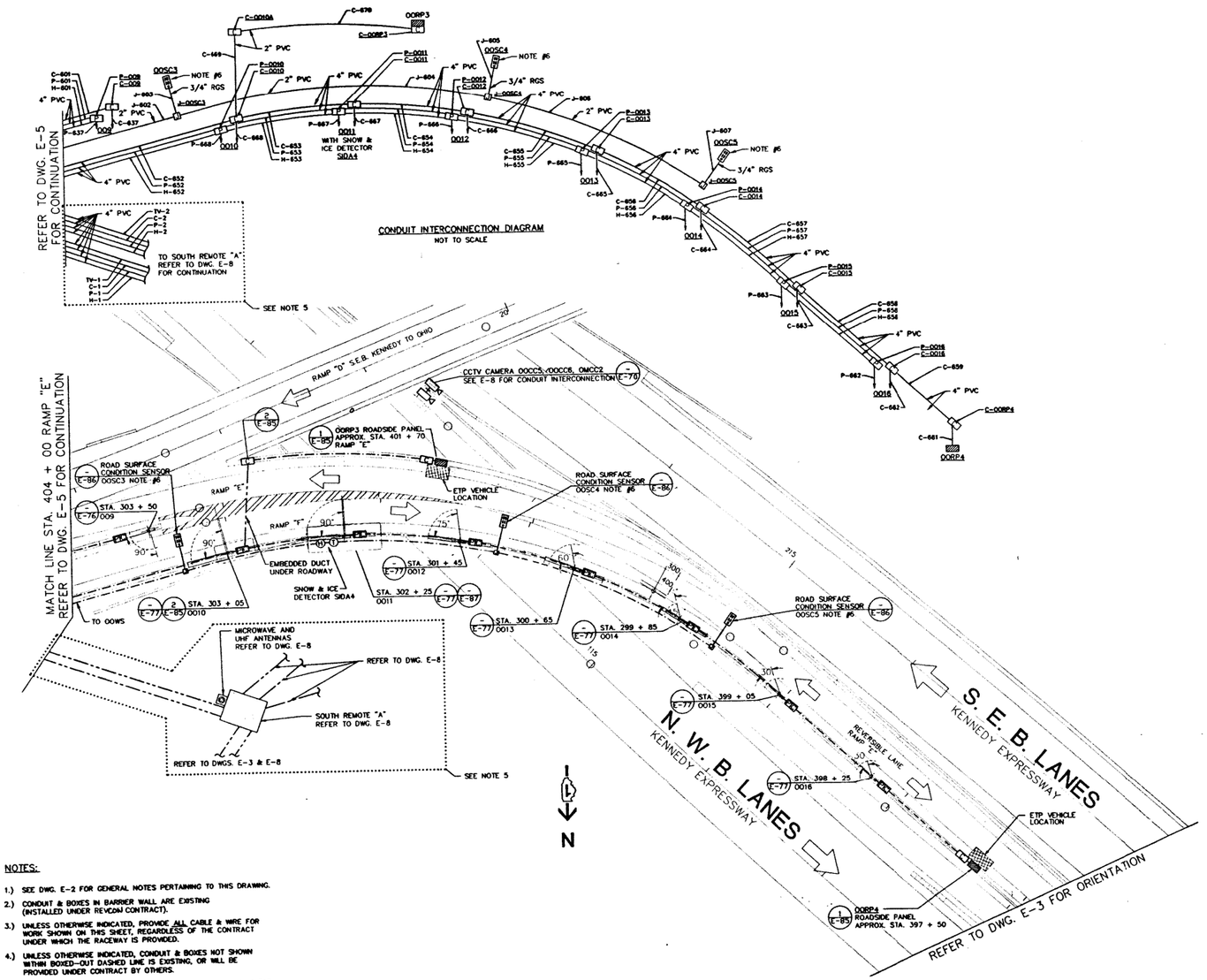

NOTES:

1.) SEE DWG. E-2 FOR GENERAL NOTES PERTAINING TO THIS DRAWING.

2.) CONDUIT & BOXES IN BARRIER WALL ARE EXISTING (INSTALLED UNDER REVCON CONTRACT).

3.) UNLESS OTHERWISE INDICATED, PROVIDE ALL CABLE & WIRE FOR WORK SHOWN ON THIS SHEET, REGARDLESS OF THE CONTRACT UNDER WHICH THE RACEWAY IS PROVIDED.

4.) UNLESS OTHERWISE INDICATED, CONDUIT & BOXES NOT SHOWN WITHIN BOXED-OUT DASHED LINE IS EXISTING, OR WILL BE PROVIDED UNDER CONTRACT BY OTHERS.

5.) PROVIDE NEW PVC CONCRETE ENCASED CONDUITS TO BUILDING "A" AS SHOWN. SEE DWG. E-56 FOR BUILDING "A" INSTALLATION PLANS.

6.) LOCATE PERMANENT SURVEY MARKER & UNCOVER ROADWAY TO LOCATE EXISTING SENSOR CONDUIT. INSTALL ROADWAY SENSOR AND CABLE AS SHOWN ON DWG. E-86.

NOTES:

1. THE ABOVE DRAWINGS REPRESENT AS LET DESIGN TO AID CONTRACTOR IN ASCERTAINING EXISTING CONDITIONS.

2. CONTRACTOR SHALL CONTACT IDOT D1 TO REQUEST THE MOST UP TO DATE RECORD DRAWINGS AVAILABLE AT THE TIME OF LETTING.

FOR INFORMATION ONLY

J:\293\Task-2\DGN\CADD Sheets\140_D160T93-sht-details08i.dgn

SINGH
CONSULTING ENGINEERS
www.singhinc.com

USER NAME = mgarvida	DESIGNED - DJ/AG	REVISED -	
FILE NAME = 140_D160T93-sht-details08i	DRAWN - DS/AS	REVISED -	
PLOT SCALE = 2.0000001.000000	CHECKED - IY	REVISED -	
PLOT DATE = 06-MAY-2015 15:51	DATE - 5/6/2015	REVISED -	

STATE OF ILLINOIS
DEPARTMENT OF TRANSPORTATION

W.B. ONTARIO /OHIO FEEDER POWER & CONTROL PLAN

SCALE: NTS | SHEET OF SHEETS | STA. TO STA.

F.A.I. RTE.	SECTION	COUNTY	TOTAL SHEETS	SHEET NO.
90/94	2012-0521	COOK	165	140
		CONTRACT NO. 60T93		
	ILLINOIS FED. AID PROJECT			

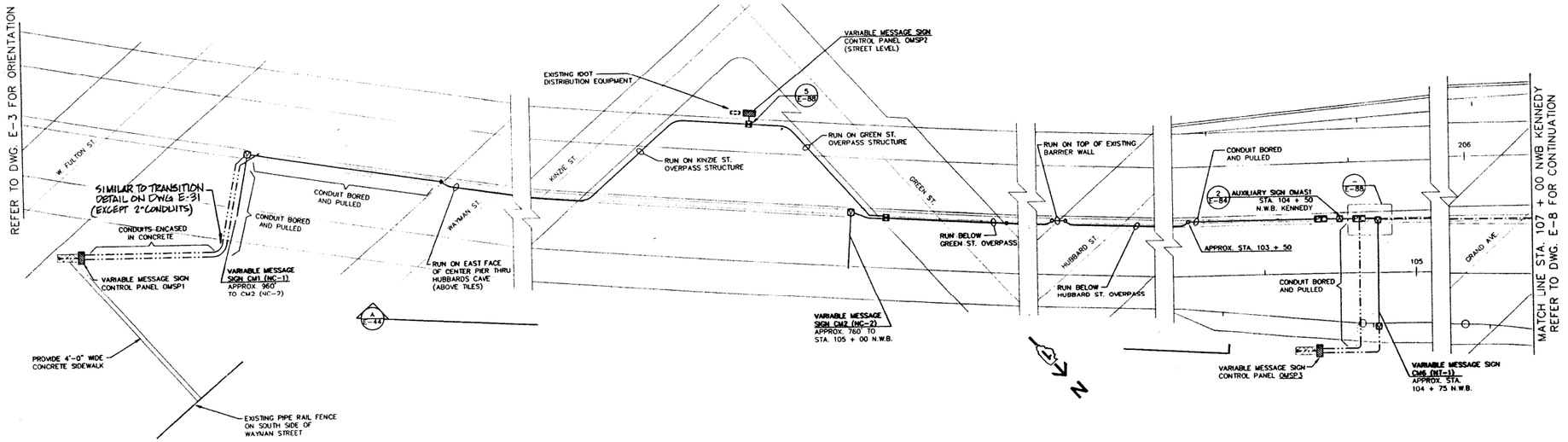

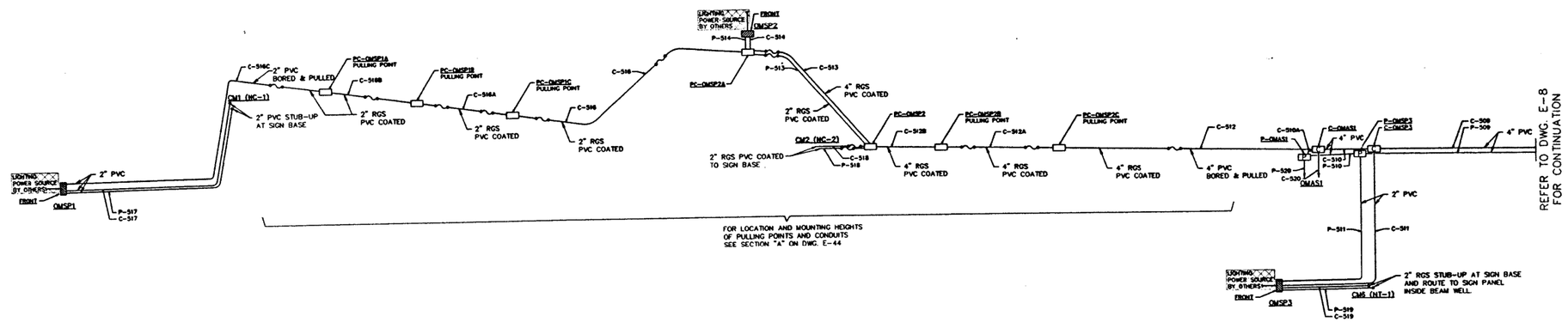

NOTES:

1.) SEE DWG. E-2 FOR GENERAL NOTES PERTAINING TO THIS DRAWING.

2.) UNLESS OTHERWISE INDICATED, ALL WORK SHOWN ON THIS DRAWING IS A PART OF THIS (REVLAC) CONTRACT.

3.) PROVIDE CONCRETE PAD, CONTROL PANEL AS SHOWN. COORDINATE THE INSTALLATION OF THE LIGHTING CIRCUIT (BY OTHERS) INTO THE CONTROL PANEL. (SEE DWG. E-88 FOR LIGHTING CIRCUIT CONDUIT IN PAD).

4.) FOR CLARIFICATION OF CONDUIT RUNS AND LOCATION OF PULLBOXES IN HUBBARDS CAVE, SEE SECTION "A" ON DWG. E-44.

5.) SURFACE MOUNTED BOXES SHOWN ON THIS DRAWING SHALL BE NEMA 4X STAINLESS STEEL. (18"L x 18"W x 8"D FOR 4" CONDUITS AND 12"L x 18"W x 6"D FOR 2" CONDUITS).

NOTES:

1. THE ABOVE DRAWINGS REPRESENT AS LET DESIGN TO AID CONTRACTOR IN ASCERTAINING EXISTING CONDITIONS.

2. CONTRACTOR SHALL CONTACT IDOT D1 TO REQUEST THE MOST UP TO DATE RECORD DRAWINGS AVAILABLE AT THE TIME OF LETTING.

FOR INFORMATION ONLY

J:\293\Task-2\DGN\CADD Sheets\141_D160T93-sht-details083.dgn

SINGH
CONSULTING ENGINEERS
www.singhinc.com

USER NAME = mgarvida	DESIGNED - DJ/AG	REVISED -	
FILE NAME = 141_D160T93-sht-details083	DRAWN - DS/AS	REVISED -	
PLOT SCALE = 2.000000:1.000000	CHECKED - IY	REVISED -	
PLOT DATE = 06-MAY-2015 15:52	DATE - 5/6/2015	REVISED -	

STATE OF ILLINOIS
DEPARTMENT OF TRANSPORTATION

KENNEDY N.W.B. POWER & CONTROL PLAN

SCALE: NTS | SHEET OF SHEETS | STA. TO STA.

F.A.I. RTE.	SECTION	COUNTY	TOTAL SHEETS	SHEET NO.
90/94	2012-0521	COOK	165	141
		CONTRACT NO. 60T93		
	ILLINOIS	FED. AID PROJECT		

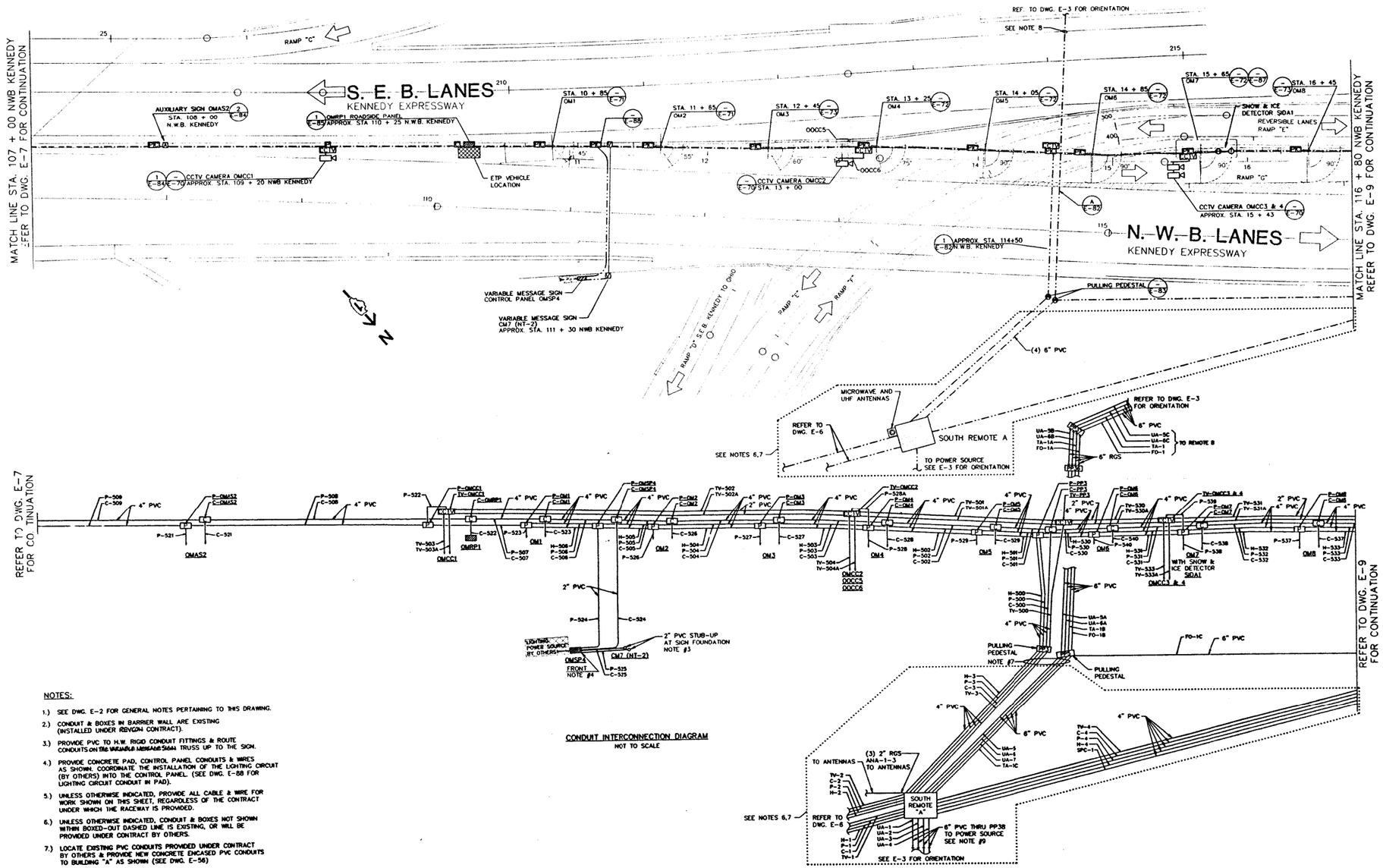

CONDUIT INTERCONNECTION DIAGRAM
NOT TO SCALE

NOTES:

1.) SEE DWG. E-2 FOR GENERAL NOTES PERTAINING TO THIS DRAWING.

2.) CONDUIT & BOXES IN BARRIER WALL ARE EXISTING (INSTALLED UNDER RBVGCN CONTRACT).

3.) PROVIDE PVC TO H.W. RIGID CONDUIT FITTINGS & ROUTE CONDUITS ON THE VARIABLE MESSAGE SIGN TRUSS UP TO THE SIGN.

4.) PROVIDE CONCRETE PAD, CONTROL PANEL CONDUITS & WIRES AS SHOWN. COORDINATE THE INSTALLATION OF THE LIGHTING CIRCUIT (BY OTHERS) INTO THE CONTROL PANEL. (SEE DWG. E-88 FOR LIGHTING CIRCUIT CONDUIT IN PAD).

5.) UNLESS OTHERWISE INDICATED, PROVIDE ALL CABLE & WIRE FOR WORK SHOWN ON THIS SHEET, REGARDLESS OF THE CONTRACT UNDER WHICH THE RACEWAY IS PROVIDED.

6.) UNLESS OTHERWISE INDICATED, CONDUIT & BOXES NOT SHOWN WITHIN BOXED-OUT DASHED LINE IS EXISTING, OR WILL BE PROVIDED UNDER CONTRACT BY OTHERS.

7.) LOCATE EXISTING PVC CONDUITS PROVIDED UNDER CONTRACT BY OTHERS & PROVIDE NEW CONCRETE ENCASED PVC CONDUITS TO BUILDING "A" AS SHOWN (SEE DWG. E-56)

8.) SEE DRAWING E-3 & E-60 FOR WORK PERTAINING TO BUILDING "B".

9.) PROVIDE THE C. EDISON CONDUITS FROM BUILDING "A" AND MAKE CONNECTION TO THE EXISTING CONDUITS INSTALLED BY ANOTHER CONTRACTOR, UNDER THE N.W. ONTARIO RAMP COORDINATING THE INCOMING POWER REQUIREMENTS WITH C. EDISON PRIOR TO INSTALLATION.

NOTES:

1. THE ABOVE DRAWINGS REPRESENT AS LET DESIGN TO AID CONTRACTOR IN ASCERTAINING EXISTING CONDITIONS.

2. CONTRACTOR SHALL CONTACT IDOT D1 TO REQUEST THE MOST UP TO DATE RECORD DRAWINGS AVAILABLE AT THE TIME OF LETTING.

FOR INFORMATION ONLY

J:\293\Task-2\DGN\CADD Sheets\142_D160T93-sht-details084.dgn

SINGH
CONSULTING ENGINEERS
www.singhinc.com

USER NAME = mgarvida	DESIGNED - DJ/AG	REVISED -	
FILE NAME = 142_D160T93-sht-details084	DRAWN - DS/AS	REVISED -	
PLOT SCALE = 2.000000:1.000000	CHECKED - IY	REVISED -	
PLOT DATE = 06-MAY-2015 15:52	DATE - 5/6/2015	REVISED -	

STATE OF ILLINOIS
DEPARTMENT OF TRANSPORTATION

KENNEDY N.W.B. POWER & CONTROL PLAN

SCALE: NTS | SHEET OF SHEETS | STA. TO STA.

F.A.I. RTE.	SECTION	COUNTY	TOTAL SHEETS	SHEET NO.
90/94	2012-0521	COOK	165	142

CONTRACT NO. 60T93

ILLINOIS FED. AID PROJECT

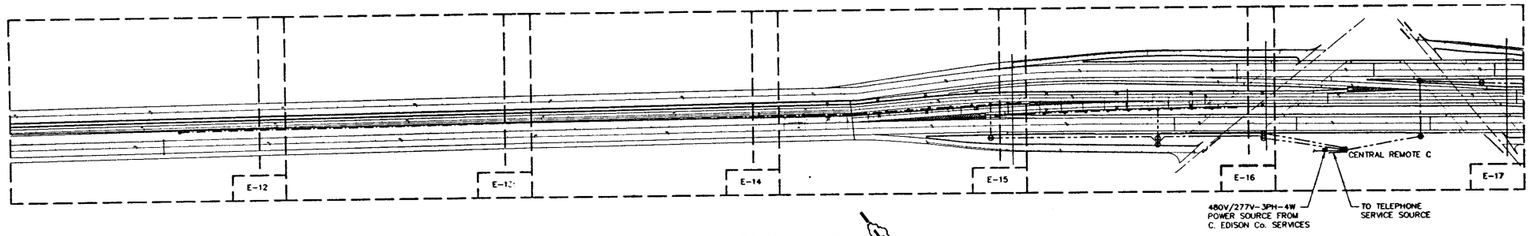

OUTBOUND SLIP RAMP
SCALE: 1"=200'

N

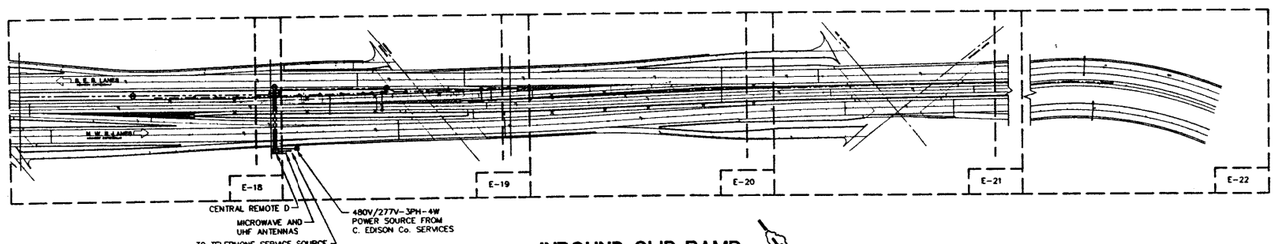

INBOUND SLIP RAMP
SCALE: 1"=200'

N

NOTES:

1. THE ABOVE DRAWINGS REPRESENT AS LET DESIGN TO AID CONTRACTOR IN ASCERTAINING EXISTING CONDITIONS.
2. CONTRACTOR SHALL CONTACT IDOT D1 TO REQUEST THE MOST UP TO DATE RECORD DRAWINGS AVAILABLE AT THE TIME OF LETTING.

FOR INFORMATION ONLY

J:\293\Task-2\DGN\CADD Sheets\143_D160T93-sht-details085.dgn

SINGH
CONSULTING ENGINEERS
www.singhinc.com

USER NAME = mgarvida	DESIGNED - DJ/AG	REVISED -	
FILE NAME = 143_D160T93-sht-details085	DRAWN - DS/AS	REVISED -	
PLOT SCALE = 2.000000:1.000000	CHECKED - IY	REVISED -	
PLOT DATE = 06-MAY-2015 15:53	DATE - 5/6/2015	REVISED -	

STATE OF ILLINOIS
DEPARTMENT OF TRANSPORTATION

INBOUND AND OUTBOUND SLIP RAMP ORIENTATION PLAN

SCALE: NTS | SHEET OF SHEETS | STA. TO STA.

F.A.I. RTE.	SECTION	COUNTY	TOTAL SHEETS	SHEET NO.
90/94	2012-0521	COOK	165	143

CONTRACT NO. 60T93

ILLINOIS FED. AID PROJECT

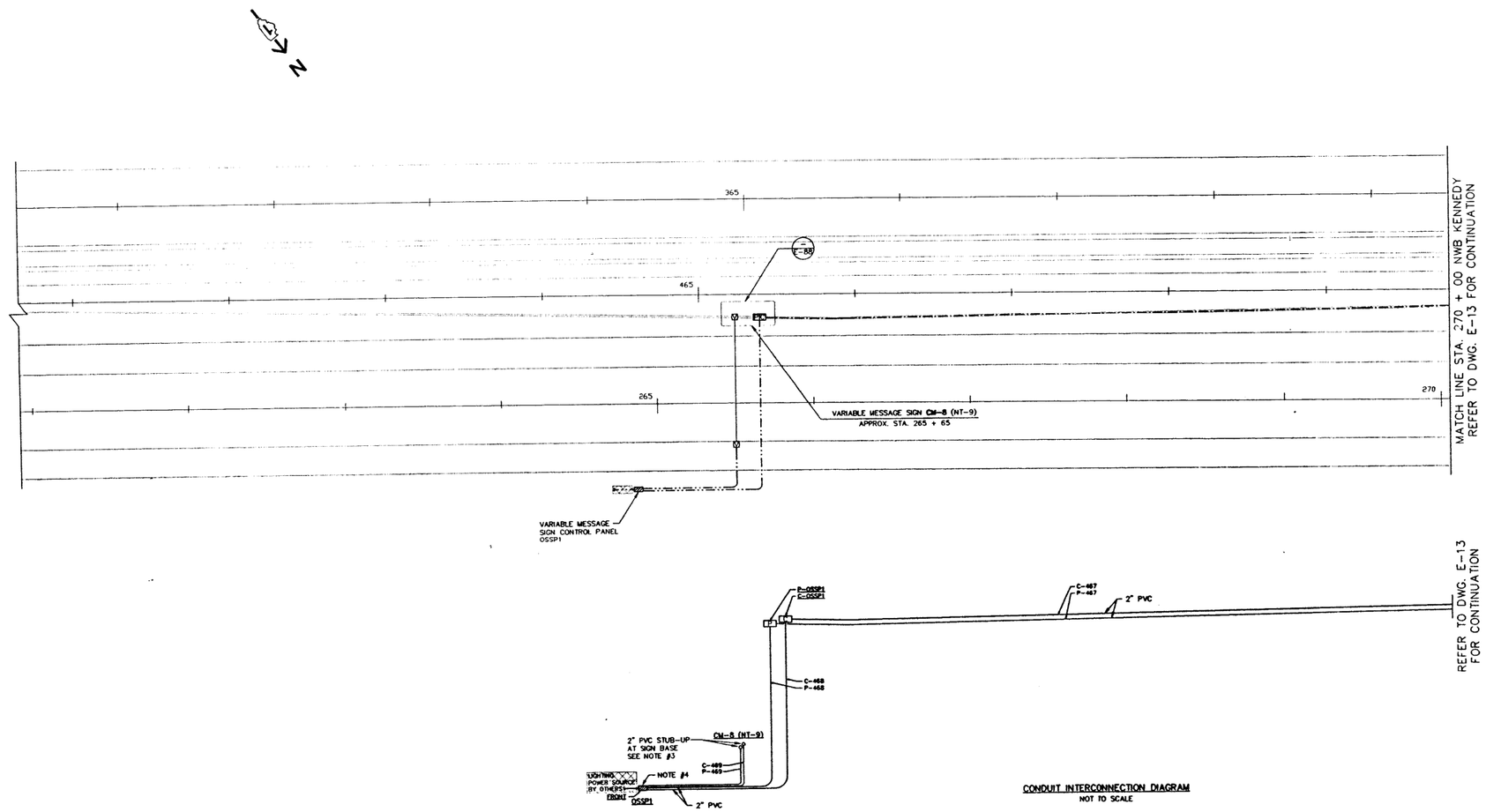

CONDUIT INTERCONNECTION DIAGRAM
NOT TO SCALE

NOTES:

1.) SEE DWG. E-2 FOR GENERAL NOTES PERTAINING TO THIS DRAWING.

2.) CONDUIT & BOXES IN BARRIER WALL ARE EXISTING (INSTALLED UNDER REVCON CONTRACT).

3.) PROVIDE PVC TO H.W. RIGID CONDUIT FITTINGS & ROUTE CONDUITS ON THE VARIABLE MESSAGE SIGN TRUSS UP TO THE SIGN.

4.) PROVIDE CONCRETE PAD, CONTROL PANEL AS SHOWN. COORDINATE THE INSTALLATION OF THE LIGHTING CIRCUIT (BY OTHERS) INTO THE CONTROL PANEL. (SEE DWG. E-88 FOR LIGHTING CIRCUIT CONDUIT IN PAD).

5.) UNLESS OTHERWISE INDICATED, PROVIDE ALL CABLE & WIRE FOR WORK SHOWN ON THIS SHEET, REGARDLESS OF THE CONTRACT UNDER WHICH THE RACEWAY IS PROVIDED.

NOTES:

1. THE ABOVE DRAWINGS REPRESENT AS LET DESIGN TO AID CONTRACTOR IN ASCERTAINING EXISTING CONDITIONS.
2. CONTRACTOR SHALL CONTACT IDOT D1 TO REQUEST THE MOST UP TO DATE RECORD DRAWINGS AVAILABLE AT THE TIME OF LETTING.

FOR INFORMATION ONLY

J:\293\Task-2\DGN\CADD Sheets\144_D160T93-sht-details086.dgn

SINGH
CONSULTING ENGINEERS
www.singhinc.com

USER NAME = mgarvida	DESIGNED - DJ/AG	REVISED -	
FILE NAME = 144_D160T93-sht-details086	DRAWN - DS/AS	REVISED -	
PLOT SCALE = 2.000000:1.000000	CHECKED - IY	REVISED -	
PLOT DATE = 06-MAY-2015 15:54	DATE - 5/6/2015	REVISED -	

STATE OF ILLINOIS
DEPARTMENT OF TRANSPORTATION

OUTBOUND SLIP RAMP POWER & CONTROL PLAN

SCALE: NTS | SHEET OF SHEETS | STA. TO STA.

F.A.I. RTE.	SECTION	COUNTY	TOTAL SHEETS	SHEET NO.
90/94	2012-0521	COOK	165	144
		CONTRACT NO. 60T93		
	ILLINOIS	FED. AID PROJECT		

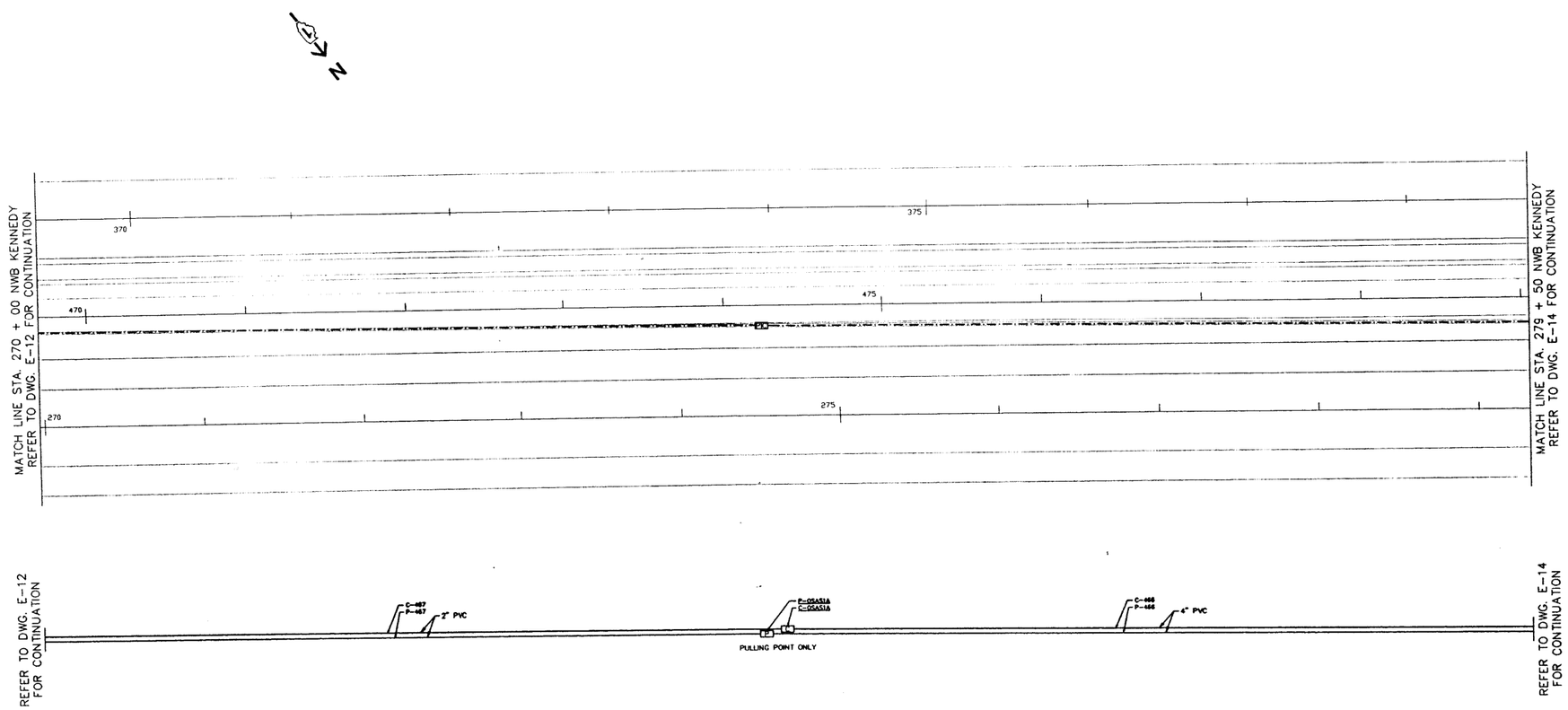

CONDUIT INTERCONNECTION DIAGRAM
NOT TO SCALE

NOTES:

1.) SEE DWG. E-2 FOR GENERAL NOTES PERTAINING TO THIS DRAWING.

2.) CONDUIT & BOXES IN BARRIER WALL ARE EXISTING (INSTALLED UNDER R&SV.CON CONTRACT).

3.) UNLESS OTHERWISE INDICATED, PROVIDE ALL CABLE & WIRE FOR WORK SHOWN ON THIS SHEET, REGARDLESS OF THE CONTRACT UNDER WHICH THE RACEWAY IS PROVIDED.

NOTES:

1. THE ABOVE DRAWINGS REPRESENT AS LET DESIGN TO AID CONTRACTOR IN ASCERTAINING EXISTING CONDITIONS.
2. CONTRACTOR SHALL CONTACT IDOT D1 TO REQUEST THE MOST UP TO DATE RECORD DRAWINGS AVAILABLE AT THE TIME OF LETTING.

FOR INFORMATION ONLY

J:\293\Task-2\DGN\CADD Sheets\145_D160T93-sht-details087.dgn

SINGH
CONSULTING ENGINEERS
www.singhinc.com

USER NAME = mgarvida	DESIGNED - DJ/AG	REVISED -	
FILE NAME = 145_D160T93-sht-details087	DRAWN - DS/AS	REVISED -	
PLOT SCALE = 2.000000:1.000000	CHECKED - IY	REVISED -	
PLOT DATE = 06-MAY-2015 15:55	DATE - 5/6/2015	REVISED -	

STATE OF ILLINOIS
DEPARTMENT OF TRANSPORTATION

OUTBOUND SLIP RAMP POWER & CONTROL PLAN

SCALE: NTS | SHEET OF SHEETS | STA. TO STA.

F.A.I. RTE.	SECTION	COUNTY	TOTAL SHEETS	SHEET NO.
90/94	2012-0521	COOK	165	145

CONTRACT NO. 60T93

ILLINOIS FED. AID PROJECT

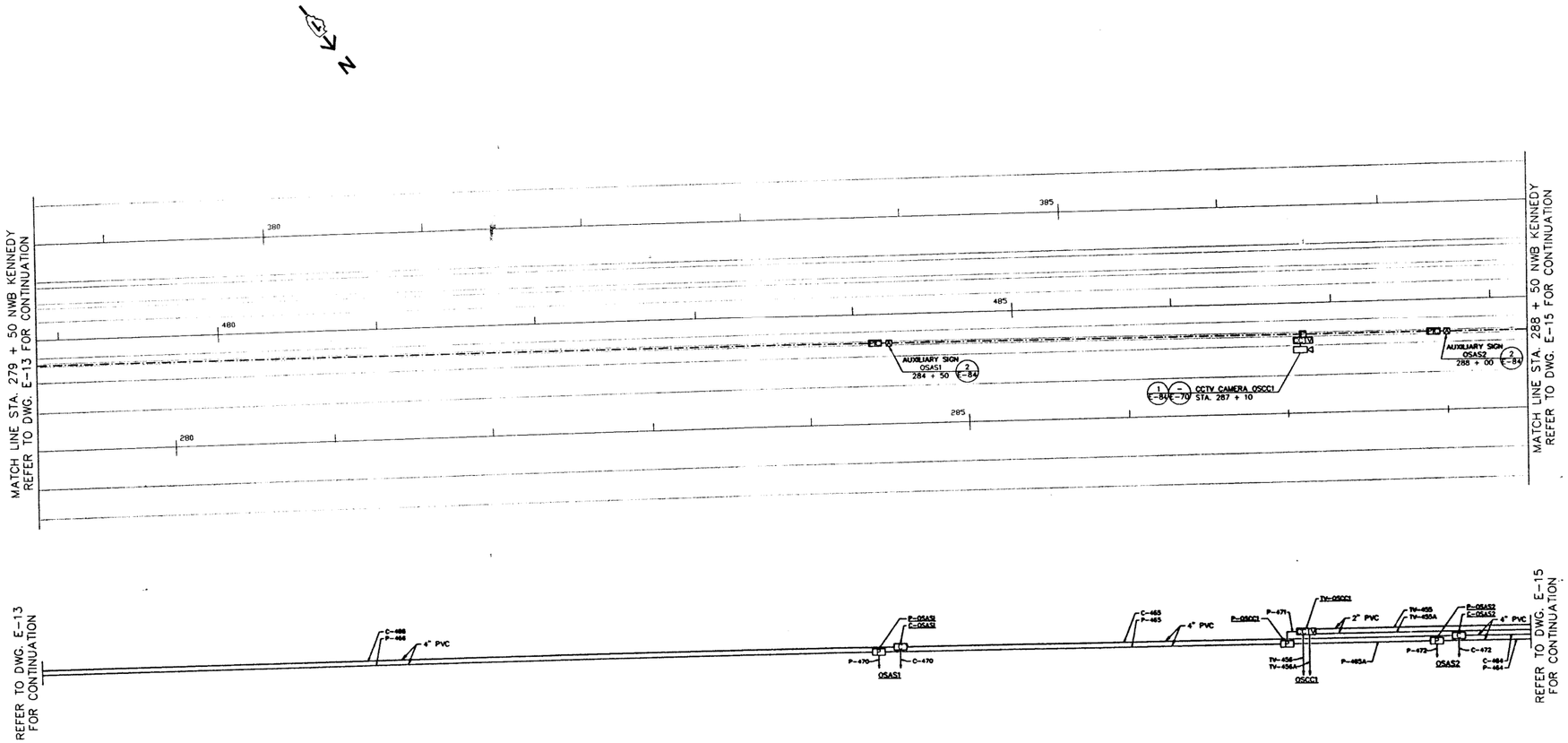

CONDUIT INTERCONNECTION DIAGRAM
NOT TO SCALE

NOTES:

1.) SEE DWG. E-2 FOR GENERAL NOTES PERTAINING TO THIS DRAWING.

2.) CONDUIT & BOXES IN BARRIER WALL ARE EXISTING (INSTALLED UNDER PBVCGN CONTRACT).

3.) UNLESS OTHERWISE INDICATED, PROVIDE ALL CABLE & WIRE FOR WORK SHOWN ON THIS SHEET, REGARDLESS OF THE CONTRACT UNDER WHICH THE RACEWAY IS PROVIDED.

NOTES:

1. THE ABOVE DRAWINGS REPRESENT AS LET DESIGN TO AID CONTRACTOR IN ASCERTAINING EXISTING CONDITIONS.
2. CONTRACTOR SHALL CONTACT IDOT D1 TO REQUEST THE MOST UP TO DATE RECORD DRAWINGS AVAILABLE AT THE TIME OF LETTING.

FOR INFORMATION ONLY

J:\293\Task-2\DGN\CADD Sheets\146_D160T93-sht-details088.dgn

SINGH
CONSULTING ENGINEERS
www.singhinc.com

USER NAME = mgarvida	DESIGNED - DJ/AG	REVISED -	
FILE NAME = 146_D160T93-sht-details088	DRAWN - DS/AS	REVISED -	
PLOT SCALE = 2.000000:1.000000	CHECKED - IY	REVISED -	
PLOT DATE = 06-MAY-2015 15:56	DATE - 5/6/2015	REVISED -	

STATE OF ILLINOIS
DEPARTMENT OF TRANSPORTATION

OUTBOUND SLIP RAMP POWER & CONTROL PLAN

SCALE: NTS | SHEET OF SHEETS | STA. TO STA.

F.A.I. RTE.	SECTION	COUNTY	TOTAL SHEETS	SHEET NO.
90/94	2012-0521	COOK	165	146

CONTRACT NO. 60T93

ILLINOIS FED. AID PROJECT

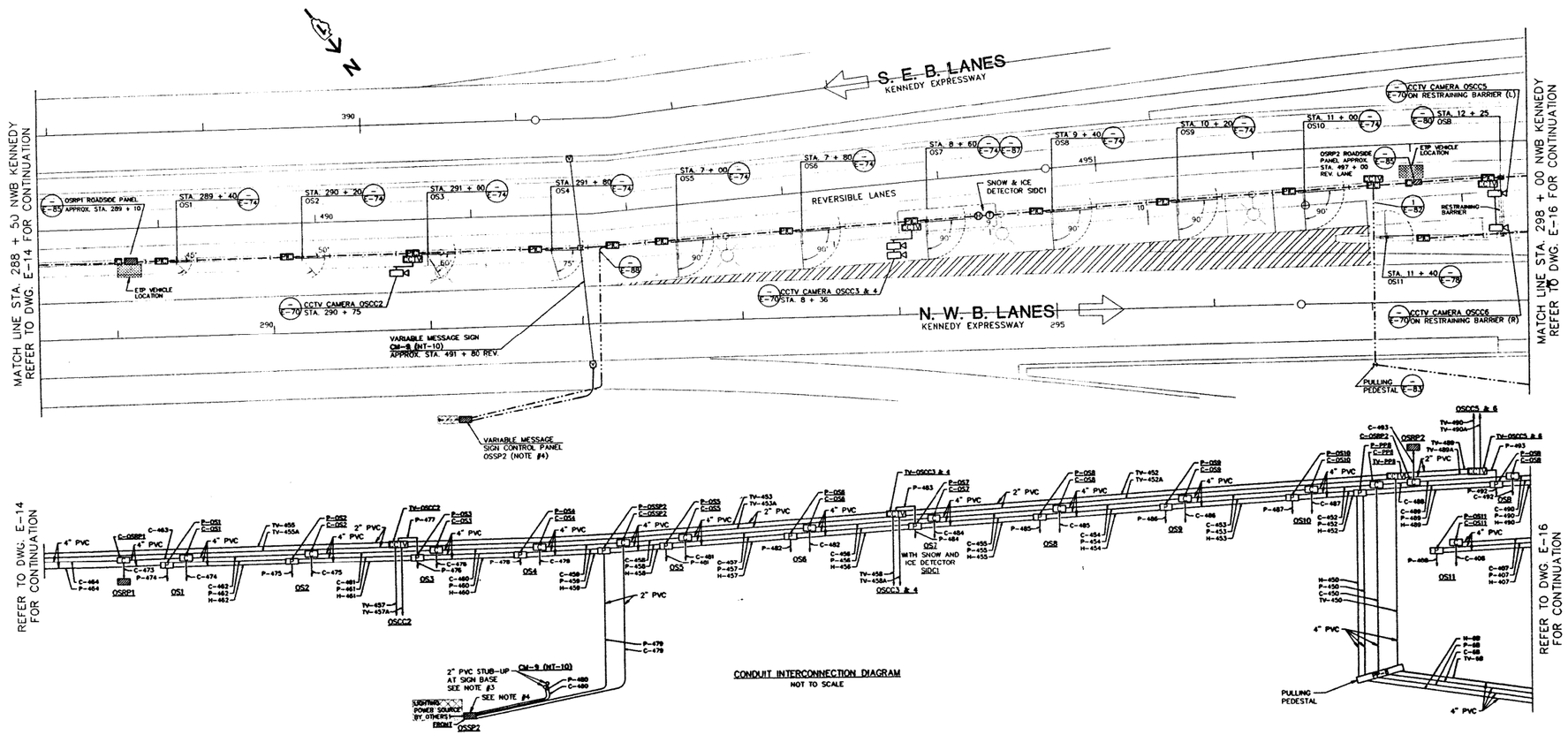

CONDUIT INTERCONNECTION DIAGRAM
NOT TO SCALE

NOTES:

1.) SEE DWG. E-2 FOR GENERAL NOTES PERTAINING TO THIS DRAWING.

2.) CONDUIT & BOXES IN BARRIER WALL ARE EXISTING (INSTALLED UNDER REV/C011 CONTRACT).

3.) PROVIDE PVC TO H.W. RIGID CONDUIT FITTINGS & ROUTE CONDUITS ON THE VARIABLE MESSAGE SIGN STRUCTURE UP TO THE SIGN

4.) PROVIDE CONCRETE PAD, CONTROL PANEL CONDUITS & WIRES AS SHOWN. COORDINATE THE INSTALLATION OF THE LIGHTING CIRCUIT (BY OTHERS) INTO THE CONTROL PANEL. (SEE DWG. E-88 FOR LIGHTING CIRCUIT CONDUIT IN PAD).

5.) UNLESS OTHERWISE INDICATED, PROVIDE ALL CABLE & WIRE FOR WORK SHOWN ON THIS SHEET, REGARDLESS OF THE CONTRACT UNDER WHICH THE RACEWAY IS PROVIDED.

6.) UNLESS OTHERWISE INDICATED, CONDUIT & BOXES NOT SHOWN WITHIN BOXED-OUT DASHED LINE IS EXISTING, OR WILL BE PROVIDED UNDER CONTRACT BY OTHERS.

NOTES:

1. THE ABOVE DRAWINGS REPRESENT AS LET DESIGN TO AID CONTRACTOR IN ASCERTAINING EXISTING CONDITIONS.

2. CONTRACTOR SHALL CONTACT IDOT D1 TO REQUEST THE MOST UP TO DATE RECORD DRAWINGS AVAILABLE AT THE TIME OF LETTING.

FOR INFORMATION ONLY

J:\293\Task-2\DGN\CADD Sheets\147_D160T93-sht-details089.dgn

SINGH
CONSULTING ENGINEERS
www.singhinc.com

USER NAME = mgarvida	DESIGNED - DJ/AG	REVISED -	
FILE NAME = 147_D160T93-sht-details089	DRAWN - DS/AS	REVISED -	
PLOT SCALE = 2.000000:1.000000	CHECKED - IY	REVISED -	
PLOT DATE = 06-MAY-2015 15:56	DATE - 5/6/2015	REVISED -	

STATE OF ILLINOIS
DEPARTMENT OF TRANSPORTATION

OUTBOUND SLIP RAMP POWER & CONTROL PLAN

SCALE: NTS | SHEET OF SHEETS | STA. TO STA.

F.A.I. RTE.	SECTION	COUNTY	TOTAL SHEETS	SHEET NO.
90/94	2012-0521	COOK	165	147

CONTRACT NO. 60T93

ILLINOIS FED. AID PROJECT

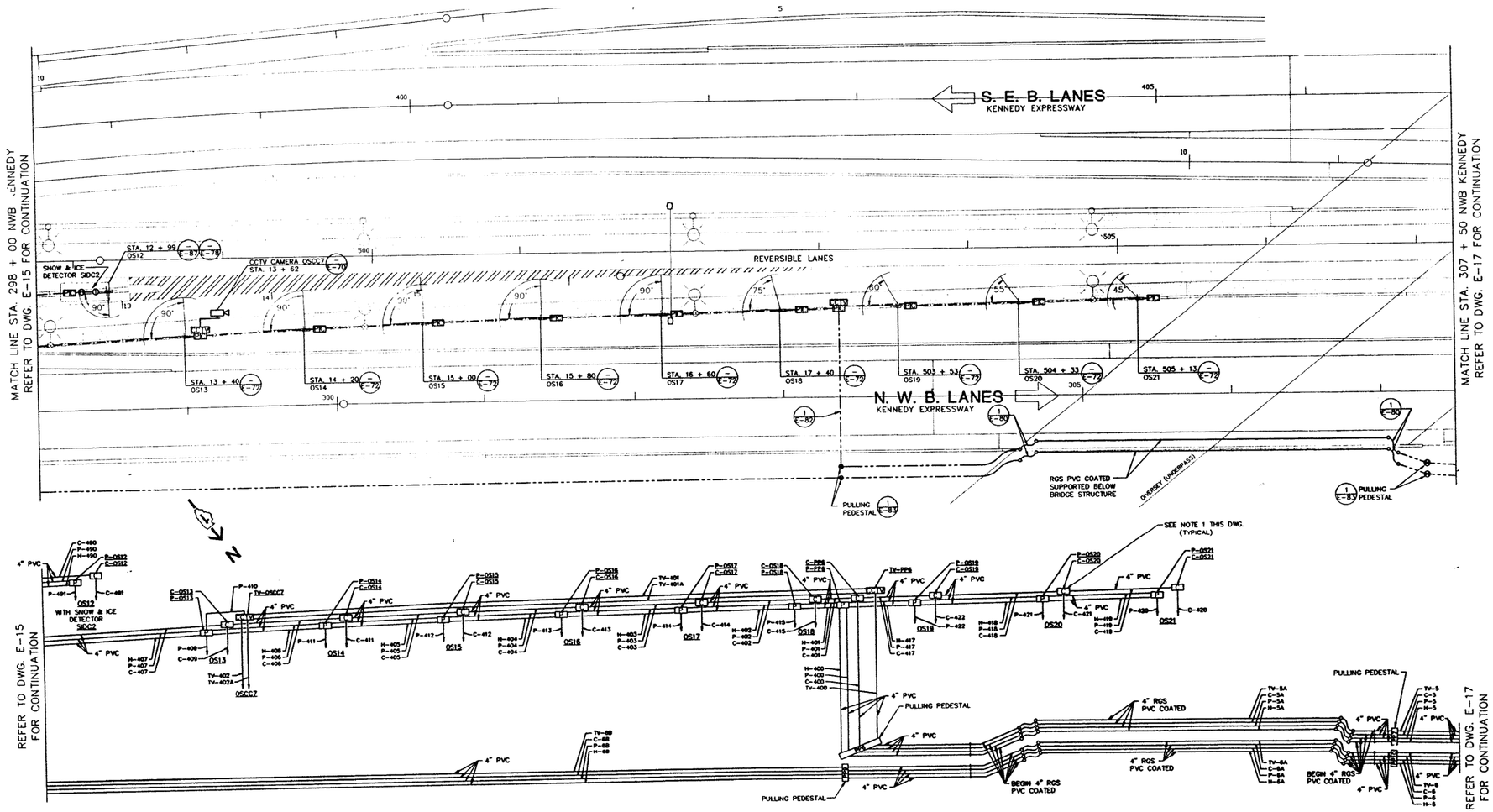

CONDUIT INTERCONNECTION DIAGRAM
NOT TO SCALE

NOTES:

1.) SEE DWG. E-2 FOR GENERAL NOTES PERTAINING TO THIS DRAWING.
2.) CONDUIT & BOXES IN BARRIER WALL ARE EXISTING (INSTALLED UNDER REVCON CONTRACT).
3.) UNLESS OTHERWISE INDICATED, PROVIDE ALL CABLE & WIRE FOR WORK SHOWN ON THIS SHEET, REGARDLESS OF THE CONTRACT UNDER WHICH THE RACEWAY IS PROVIDED.
4.) UNLESS OTHERWISE INDICATED, CONDUIT & BOXES NOT SHOWN WITHIN BOXED-OUT DASHED LINE IS EXISTING, OR WILL BE PROVIDED UNDER CONTRACT BY OTHERS.

NOTES:

1. THE ABOVE DRAWINGS REPRESENT AS LET DESIGN TO AID CONTRACTOR IN ASCERTAINING EXISTING CONDITIONS.
2. CONTRACTOR SHALL CONTACT IDOT D1 TO REQUEST THE MOST UP TO DATE RECORD DRAWINGS AVAILABLE AT THE TIME OF LETTING.

FOR INFORMATION ONLY

J:\293\Task-2\DGN\CADD Sheets\148_D160T93-sht-details090.dgn

SINGH
CONSULTING ENGINEERS
www.singhinc.com

USER NAME = mgarvida	DESIGNED - DJ/AG	REVISED -	
FILE NAME = 148_D160T93-sht-details090	DRAWN - DS/AS	REVISED -	
PLOT SCALE = 2.000000:1.000000	CHECKED - IY	REVISED -	
PLOT DATE = 06-MAY-2015 15:57	DATE - 5/6/2015	REVISED -	

STATE OF ILLINOIS
DEPARTMENT OF TRANSPORTATION

OUTBOUND SLIP RAMP POWER & CONTROL PLAN

SCALE: NTS | SHEET OF SHEETS | STA. TO STA.

F.A.I. RTE.	SECTION	COUNTY	TOTAL SHEETS	SHEET NO.
90/94	2012-0521	COOK	165	148
		CONTRACT NO. 60T93		
	ILLINOIS	FED. AID PROJECT		

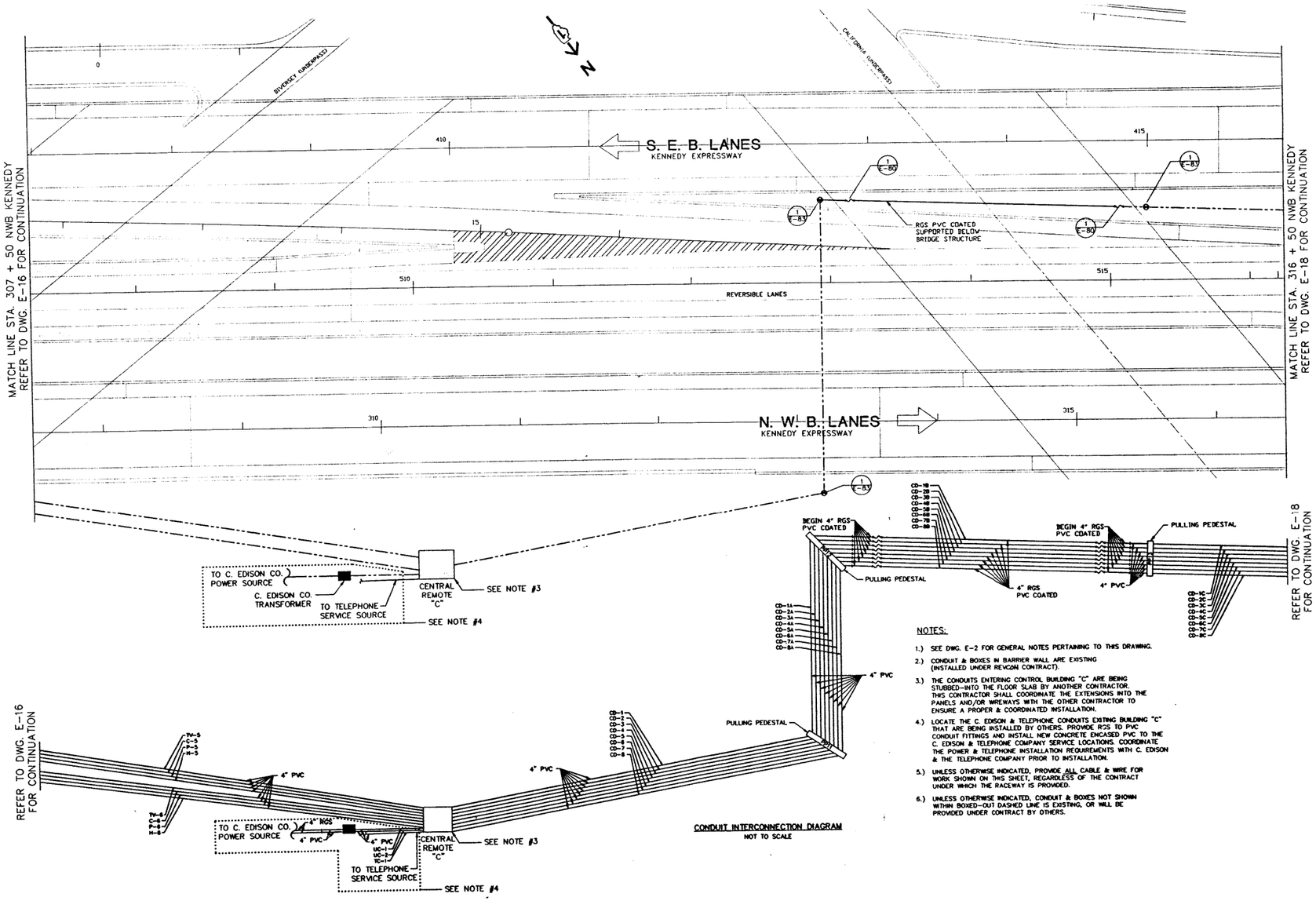

NOTES:

1.) SEE DWG. E-2 FOR GENERAL NOTES PERTAINING TO THIS DRAWING.

2.) CONDUIT & BOXES IN BARRIER WALL ARE EXISTING (INSTALLED UNDER REVCON CONTRACT).

3.) THE CONDUITS ENTERING CONTROL BUILDING "C" ARE BEING STUBBED-INTO THE FLOOR SLAB BY ANOTHER CONTRACTOR. THIS CONTRACTOR SHALL COORDINATE THE EXTENSIONS INTO THE PANELS AND/OR WIREWAYS WITH THE OTHER CONTRACTOR TO ENSURE A PROPER & COORDINATED INSTALLATION.

4.) LOCATE THE C. EDISON & TELEPHONE CONDUITS EXITING BUILDING "C" THAT ARE BEING INSTALLED BY OTHERS. PROVIDE RGS TO PVC CONDUIT FITTINGS AND INSTALL NEW CONCRETE ENCASED PVC TO THE C. EDISON & TELEPHONE COMPANY SERVICE LOCATIONS. COORDINATE THE POWER & TELEPHONE INSTALLATION REQUIREMENTS WITH C. EDISON & THE TELEPHONE COMPANY PRIOR TO INSTALLATION.

5.) UNLESS OTHERWISE INDICATED, PROVIDE ALL CABLE & WIRE FOR WORK SHOWN ON THIS SHEET, REGARDLESS OF THE CONTRACT UNDER WHICH THE RACEWAY IS PROVIDED.

6.) UNLESS OTHERWISE INDICATED, CONDUIT & BOXES NOT SHOWN WITHIN BOXED-OUT DASHED LINE IS EXISTING, OR WILL BE PROVIDED UNDER CONTRACT BY OTHERS.

NOTES:

1. THE ABOVE DRAWINGS REPRESENT AS LET DESIGN TO AID CONTRACTOR IN ASCERTAINING EXISTING CONDITIONS.
2. CONTRACTOR SHALL CONTACT IDOT D1 TO REQUEST THE MOST UP TO DATE RECORD DRAWINGS AVAILABLE AT THE TIME OF LETTING.

FOR INFORMATION ONLY

J:\293\Task-2\DGN\CADD Sheets\149_D160T93-sht-details091.dgn

SINGH
CONSULTING ENGINEERS
www.singhinc.com

USER NAME = mgarvida	DESIGNED - DJ/AG	REVISED -	
FILE NAME = 149_D160T93-sht-details091	DRAWN - DS/AS	REVISED -	
PLOT SCALE = 2.0000000:1.000000	CHECKED - IY	REVISED -	
PLOT DATE = 06-MAY-2015 15:59	DATE - 5/6/2015	REVISED -	

STATE OF ILLINOIS
DEPARTMENT OF TRANSPORTATION

OUTBOUND SLIP RAMP POWER & CONTROL PLAN

SCALE: NTS | SHEET OF SHEETS | STA. TO STA.

F.A.I. RTE.	SECTION	COUNTY	TOTAL SHEETS	SHEET NO.
90/94	2012-0521	COOK	165	149

CONTRACT NO. 60T93

ILLINOIS FED. AID PROJECT

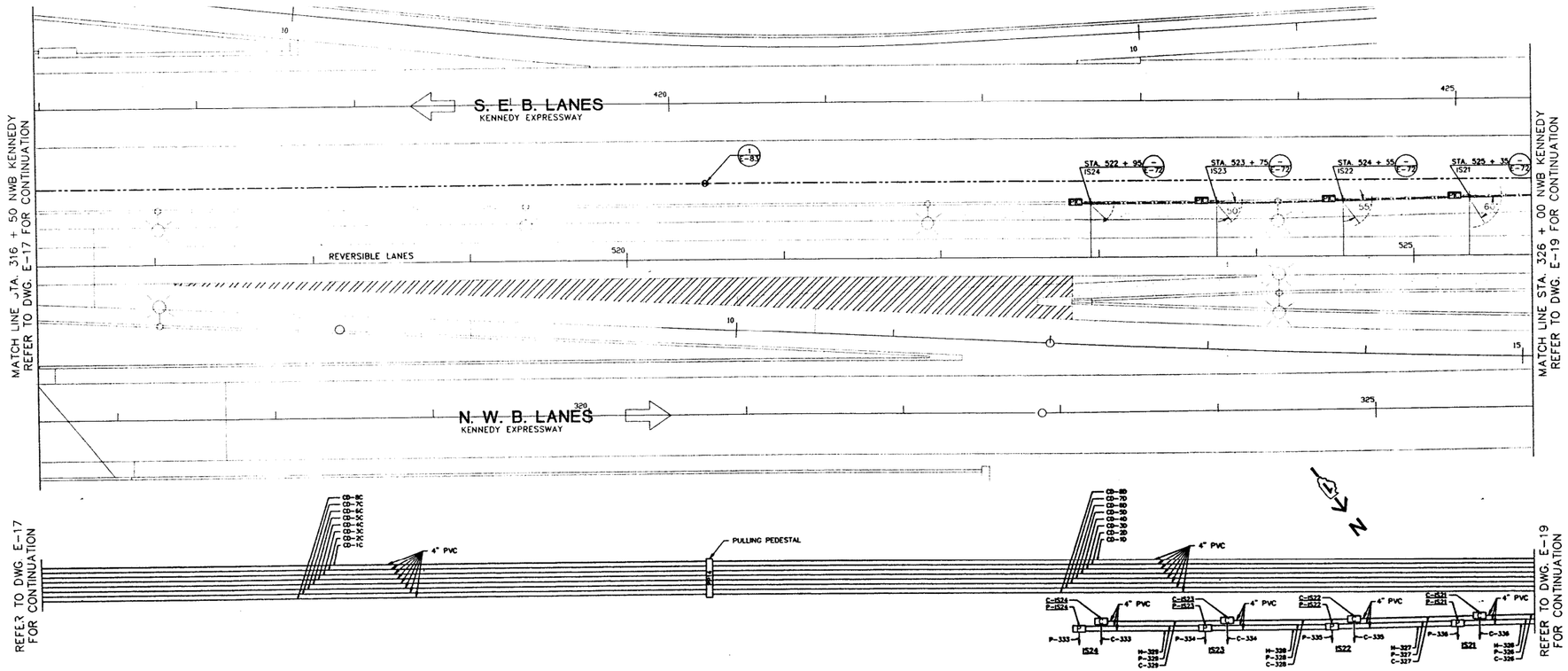

CONDUIT INTERCONNECTION DIAGRAM
NOT TO SCALE

NOTES:

1.) SEE DWG. E-2 FOR GENERAL NOTES PERTAINING TO THIS DRAWING.
2.) CONDUIT & BOXES IN BARRIER WALL ARE EXISTING (INSTALLED UNDER REVCON CONTRACT).
3.) UNLESS OTHERWISE INDICATED, PROVIDE ALL CABLE & WIRE FOR WORK SHOWN ON THIS SHEET, REGARDLESS OF THE CONTRACT UNDER WHICH THE RACEWAY IS PROVIDED.
4.) UNLESS OTHERWISE INDICATED, CONDUIT & BOXES NOT SHOWN WITHIN BOXED-OUT DASHED LINE IS EXISTING, OR WILL BE PROVIDED UNDER CONTRACT BY OTHERS.

NOTES:

1. THE ABOVE DRAWINGS REPRESENT AS LET DESIGN TO AID CONTRACTOR IN ASCERTAINING EXISTING CONDITIONS.
2. CONTRACTOR SHALL CONTACT IDOT D1 TO REQUEST THE MOST UP TO DATE RECORD DRAWINGS AVAILABLE AT THE TIME OF LETTING.

FOR INFORMATION ONLY

J:\293\Task-2\DGN\CADD Sheets\150_D160T93-sht-details092.dgn

SINGH
CONSULTING ENGINEERS
www.singhinc.com

USER NAME = mgarvida	DESIGNED - DJ/AG	REVISED -	
FILE NAME = 150_D160T93-sht-details092	DRAWN - DS/AS	REVISED -	
PLOT SCALE = 2.000000:1.000000	CHECKED - IY	REVISED -	
PLOT DATE = 06-MAY-2015 16:00	DATE - 5/6/2015	REVISED -	

STATE OF ILLINOIS
DEPARTMENT OF TRANSPORTATION

INBOUND SLIP RAMP POWER & CONTROL PLAN

SCALE: NTS | SHEET OF SHEETS | STA. TO STA.

F.A.I. RTE.	SECTION	COUNTY	TOTAL SHEETS	SHEET NO.
90/94	2012-0521	COOK	165	150
		CONTRACT NO. 60T93		
	ILLINOIS	FED. AID PROJECT		

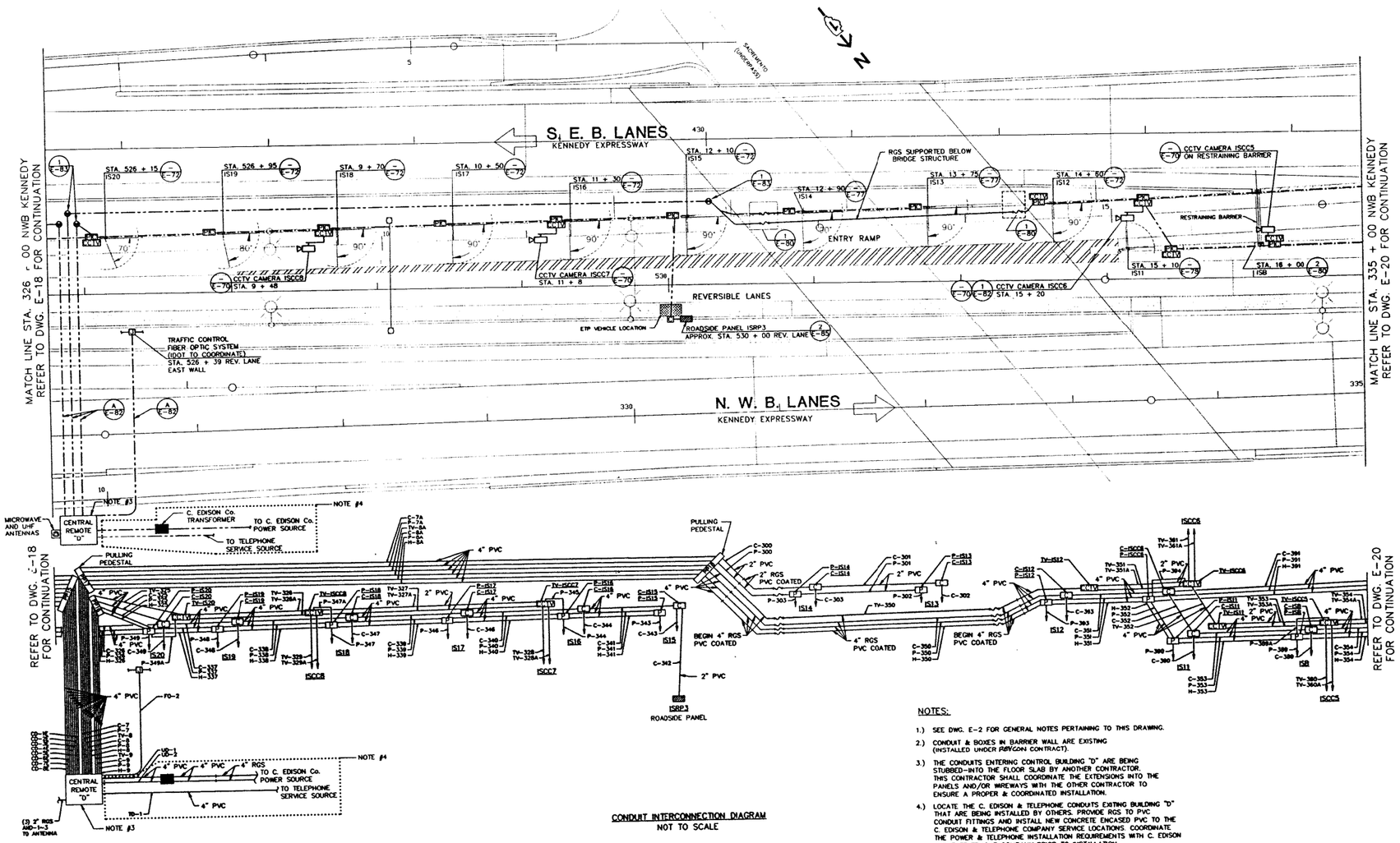

CONDUIT INTERCONNECTION DIAGRAM
NOT TO SCALE

NOTES:

1.) SEE DWG. E-2 FOR GENERAL NOTES PERTAINING TO THIS DRAWING.

2.) CONDUIT & BOXES IN BARRIER WALL ARE EXISTING (INSTALLED UNDER PAYGON CONTRACT).

3.) THE CONDUITS ENTERING CONTROL BUILDING "D" ARE BEING STUBBED-INTO THE FLOOR SLAB BY ANOTHER CONTRACTOR. THIS CONTRACTOR SHALL COORDINATE THE EXTENSIONS INTO THE PANELS AND/OR WIREWAYS WITH THE OTHER CONTRACTOR TO ENSURE A PROPER & COORDINATED INSTALLATION.

4.) LOCATE THE C. EDISON & TELEPHONE CONDUITS EXITING BUILDING "D" THAT ARE BEING INSTALLED BY OTHERS. PROVIDE RGS TO PVC CONDUIT FITTINGS AND INSTALL NEW CONCRETE ENCASED PVC TO THE C. EDISON & TELEPHONE COMPANY SERVICE LOCATIONS. COORDINATE THE POWER & TELEPHONE INSTALLATION REQUIREMENTS WITH C. EDISON & THE TELEPHONE COMPANY PRIOR TO INSTALLATION.

5.) UNLESS OTHERWISE INDICATED, PROVIDE ALL CABLE & WIRE FOR WORK SHOWN ON THIS SHEET, REGARDLESS OF THE CONTRACT UNDER WHICH THE RACEWAY IS PROVIDED.

6.) UNLESS OTHERWISE INDICATED, CONDUIT & BOXES NOT SHOWN WITHIN BOXED-OUT DASHED LINE IS EXISTING, OR WILL BE PROVIDED UNDER CONTRACT BY OTHERS.

NOTES:

1. THE ABOVE DRAWINGS REPRESENT AS LET DESIGN TO AID CONTRACTOR IN ASCERTAINING EXISTING CONDITIONS.
2. CONTRACTOR SHALL CONTACT IDOT D1 TO REQUEST THE MOST UP TO DATE RECORD DRAWINGS AVAILABLE AT THE TIME OF LETTING.

FOR INFORMATION ONLY

J:\293\Task-2\DGN\CADD Sheets\151.D160T93-sht-details093.dgn

SINGH
CONSULTING ENGINEERS
www.singhinc.com

USER NAME = mgarvida	DESIGNED - DJ/AG	REVISED -	
FILE NAME = 151.D160T93-sht-details093	DRAWN - DS/AS	REVISED -	
PLOT SCALE = 2.0000000:1.000000	CHECKED - IY	REVISED -	
PLOT DATE = 06-MAY-2015 16:01	DATE - 5/6/2015	REVISED -	

STATE OF ILLINOIS
DEPARTMENT OF TRANSPORTATION

INBOUND SLIP RAMP POWER & CONTROL PLAN

SCALE: NTS | SHEET OF SHEETS | STA. TO STA.

F.A.I. RTE.	SECTION	COUNTY	TOTAL SHEETS	SHEET NO.
90/94	2012-0521	COOK	165	151

CONTRACT NO. 60T93

ILLINOIS FED. AID PROJECT

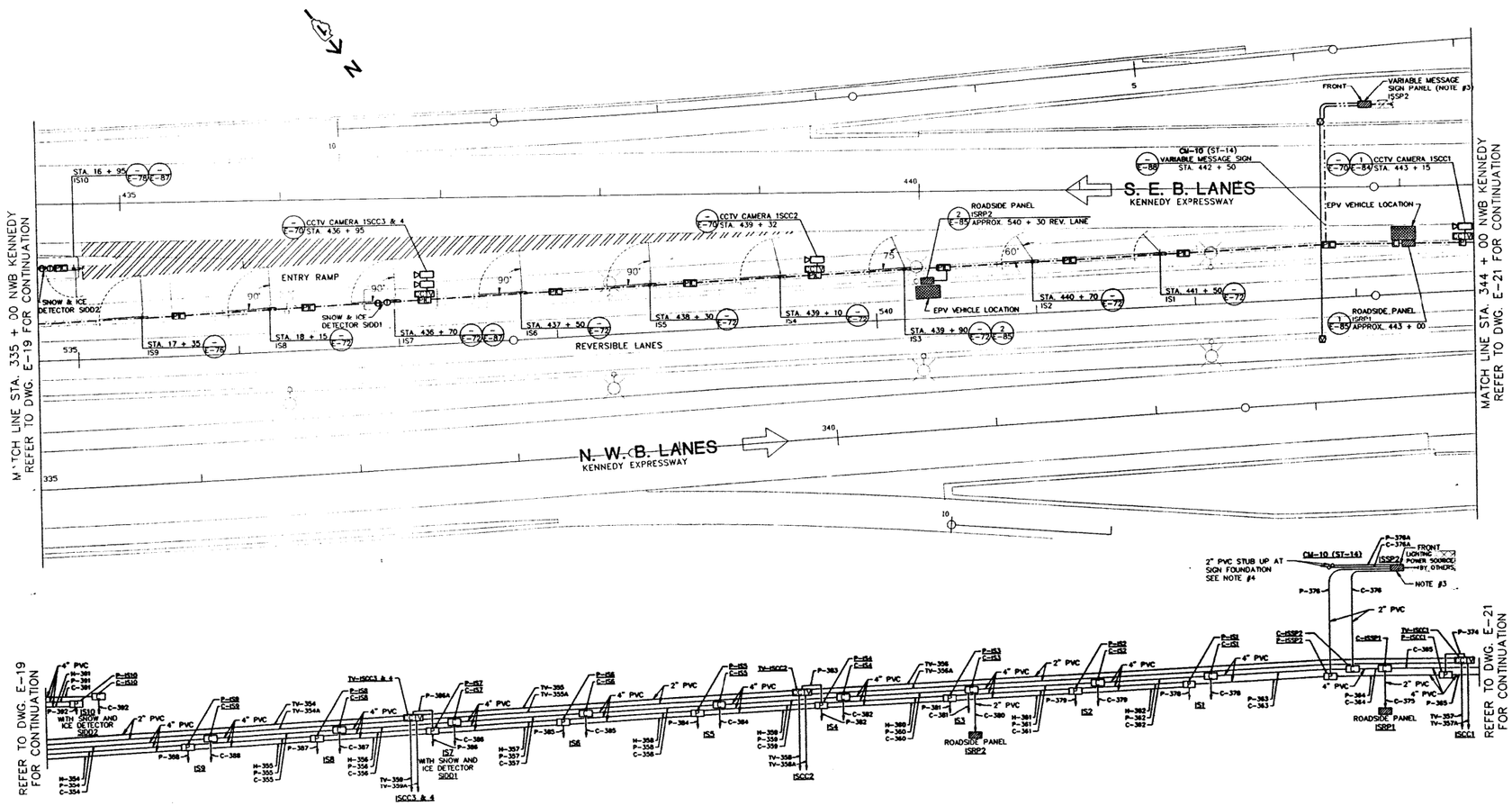

CONDUIT INTERCONNECTION DIAGRAM
NOT TO SCALE

NOTES:

1.) SEE DWG. E-2 FOR GENERAL NOTES PERTAINING TO THIS DRAWING.

2.) CONDUIT & BOXES IN BARRIER WALL ARE EXISTING (INSTALLED UNDER RBWCON CONTRACT).

3.) PROVIDE CONCRETE PAD, CONTROL PANEL CONDUITS & WIRES AS SHOWN. COORDINATE THE INSTALLATION OF THE LIGHTING CIRCUIT (BY OTHERS) INTO THE CONTROL PANEL. (SEE DWG. E-88 FOR LIGHTING CIRCUIT CONDUIT IN PAD).

4.) PROVIDE RGS CONDUIT TO PVC FITTING & ROUTE RGS CONDUIT UP TO VARIABLE MESSAGE SIGN (SEE DETAIL ON DWG. E-88).

5.) UNLESS OTHERWISE INDICATED, PROVIDE ALL CABLE & WIRE FOR WORK SHOWN ON THIS SHEET, REGARDLESS OF THE CONTRACT UNDER WHICH THE RACEWAY IS PROVIDED.

6.) UNLESS OTHERWISE INDICATED, CONDUIT & BOXES NOT SHOWN WITHIN BOXED-OUT DASHED LINE IS EXISTING, OR WILL BE PROVIDED UNDER CONTRACT BY OTHERS.

NOTES:

1. THE ABOVE DRAWINGS REPRESENT AS LET DESIGN TO AID CONTRACTOR IN ASCERTAINING EXISTING CONDITIONS.

2. CONTRACTOR SHALL CONTACT IDOT D1 TO REQUEST THE MOST UP TO DATE RECORD DRAWINGS AVAILABLE AT THE TIME OF LETTING.

FOR INFORMATION ONLY

J:\293\Task-2\DGN\CADD Sheets\152_D160T93-sht-details094.dgn

SINGH
CONSULTING ENGINEERS
www.singhinc.com

USER NAME = mgarvida	DESIGNED - DJ/AG	REVISED -	
FILE NAME = 152_D160T93-sht-details094	DRAWN - DS/AS	REVISED -	
PLOT SCALE = 2.0000000:1.000000	CHECKED - IY	REVISED -	
PLOT DATE = 06-MAY-2015 16:02	DATE - 5/6/2015	REVISED -	

STATE OF ILLINOIS
DEPARTMENT OF TRANSPORTATION

INBOUND SLIP RAMP POWER & CONTROL PLAN

SCALE: NTS | SHEET OF SHEETS | STA. TO STA.

F.A.I. RTE.	SECTION	COUNTY	TOTAL SHEETS	SHEET NO.
90/94	2012-0521	COOK	165	152
		CONTRACT NO. 60T93		
		ILLINOIS FED. AID PROJECT		

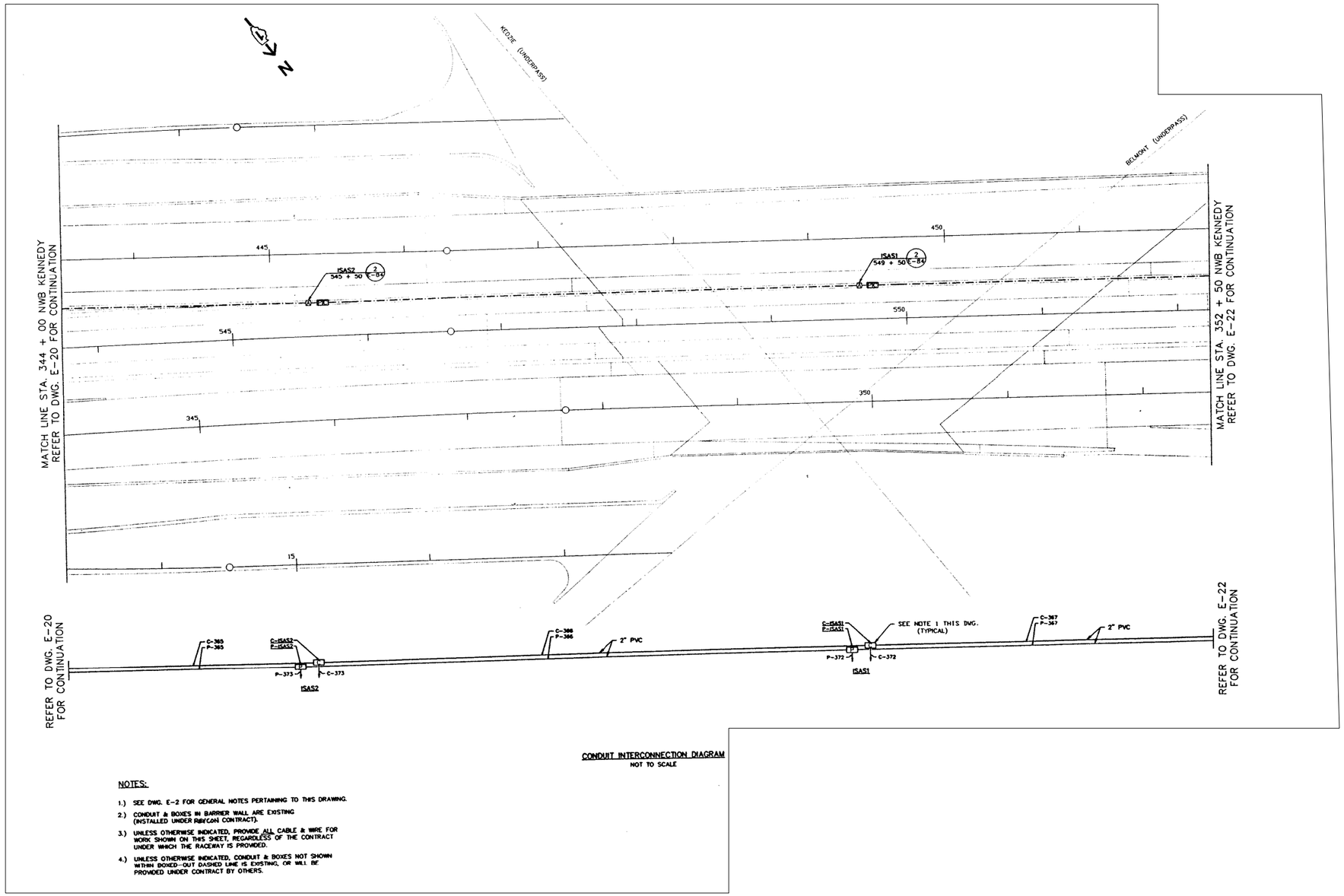

CONDUIT INTERCONNECTION DIAGRAM
NOT TO SCALE

NOTES:

1.) SEE DWG. E-2 FOR GENERAL NOTES PERTAINING TO THIS DRAWING.

2.) CONDUIT & BOXES IN BARRIER WALL ARE EXISTING (INSTALLED UNDER R&W/CON. CONTRACT).

3.) UNLESS OTHERWISE INDICATED, PROVIDE ALL CABLE & WIRE FOR WORK SHOWN ON THIS SHEET, REGARDLESS OF THE CONTRACT UNDER WHICH THE RACEWAY IS PROVIDED.

4.) UNLESS OTHERWISE INDICATED, CONDUIT & BOXES NOT SHOWN WITHIN BOXED-OUT DASHED LINE IS EXISTING, OR WILL BE PROVIDED UNDER CONTRACT BY OTHERS.

NOTES:

1. THE ABOVE DRAWINGS REPRESENT AS LET DESIGN TO AID CONTRACTOR IN ASCERTAINING EXISTING CONDITIONS.

2. CONTRACTOR SHALL CONTACT IDOT D1 TO REQUEST THE MOST UP TO DATE RECORD DRAWINGS AVAILABLE AT THE TIME OF LETTING.

FOR INFORMATION ONLY

J:\293\Task-2\DGN\CADD Sheets\153_D160T93-sht-details095.dgn

SINGH
CONSULTING ENGINEERS
www.singhinc.com

USER NAME = mgarvida	DESIGNED - DJ/AG	REVISED -	
FILE NAME = 153_D160T93-sht-details095	DRAWN - DS/AS	REVISED -	
PLOT SCALE = 2.000000:1.000000	CHECKED - IY	REVISED -	
PLOT DATE = 06-MAY-2015 16:03	DATE - 5/6/2015	REVISED -	

STATE OF ILLINOIS
DEPARTMENT OF TRANSPORTATION

INBOUND SLIP RAMP POWER & CONTROL PLAN

SCALE: NTS | SHEET OF SHEETS | STA. TO STA.

F.A.I. RTE.	SECTION	COUNTY	TOTAL SHEETS	SHEET NO.
90/94	2012-0521	COOK	165	153
		CONTRACT NO. 60T93		
	ILLINOIS	FED. AID PROJECT		

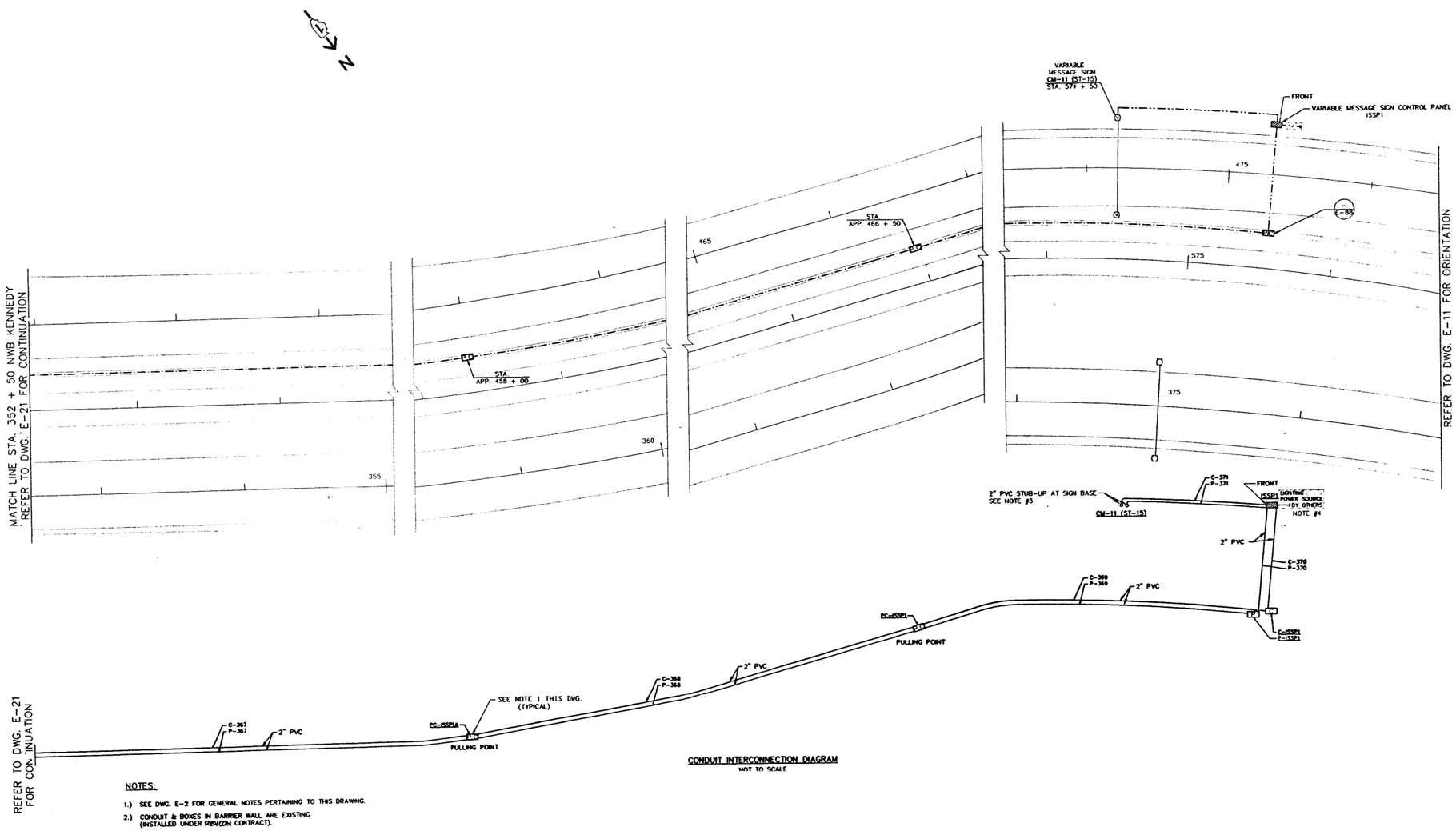

CONDUIT INTERCONNECTION DIAGRAM
NOT TO SCALE

NOTES:

1.) SEE DWG. E-2 FOR GENERAL NOTES PERTAINING TO THIS DRAWING.

2.) CONDUIT & BOXES IN BARRIER WALL ARE EXISTING (INSTALLED UNDER RBW/CDN CONTRACT).

3.) PROVIDE RGS CONDUIT TO PVC FITTING & ROUTE RGS CONDUIT UP TO VARIABLE MESSAGE SIGN (SEE DETAIL ON DWG. E-88).

4.) PROVIDE CONCRETE PAD, CONTROL PANEL CONDUITS & WIRES AS SHOWN. COORDINATE THE INSTALLATION OF THE LIGHTING CIRCUIT (BY OTHERS) INTO THE CONTROL PANEL. (SEE DWG. E-88 FOR LIGHTING CIRCUIT CONDUIT IN PAD).

5.) UNLESS OTHERWISE INDICATED, PROVIDE ALL CABLE & WIRE FOR WORK SHOWN ON THIS SHEET, REGARDLESS OF THE CONTRACT UNDER WHICH THE RACEWAY IS PROVIDED.

6.) UNLESS OTHERWISE INDICATED, CONDUIT & BOXES NOT SHOWN WITHIN BOXED-OUT DASHED LINE IS EXISTING, OR WILL BE PROVIDED UNDER CONTRACT BY OTHERS.

NOTES:

1. THE ABOVE DRAWINGS REPRESENT AS LET DESIGN TO AID CONTRACTOR IN ASCERTAINING EXISTING CONDITIONS.
2. CONTRACTOR SHALL CONTACT IDOT D1 TO REQUEST THE MOST UP TO DATE RECORD DRAWINGS AVAILABLE AT THE TIME OF LETTING.

FOR INFORMATION ONLY

J:\293\Task-2\DGN\CADD Sheets\154_D160T93-sht-details096.dgn

SINGH
CONSULTING ENGINEERS
www.singhinc.com

USER NAME = mgarvida	DESIGNED - DJ/AG	REVISED -	
FILE NAME = 154_D160T93-sht-details096	DRAWN - DS/AS	REVISED -	
PLOT SCALE = 2.0000000:1.000000	CHECKED - IY	REVISED -	
PLOT DATE = 06-MAY-2015 16:04	DATE - 5/6/2015	REVISED -	

STATE OF ILLINOIS
DEPARTMENT OF TRANSPORTATION

INBOUND SLIP RAMP POWER & CONTROL PLAN

SCALE: NTS | SHEET OF SHEETS | STA. TO STA.

F.A.I. RTE.	SECTION	COUNTY	TOTAL SHEETS	SHEET NO.
90/94	2012-0521	COOK	165	154
		CONTRACT NO. 60T93		
	ILLINOIS	FED. AID PROJECT		

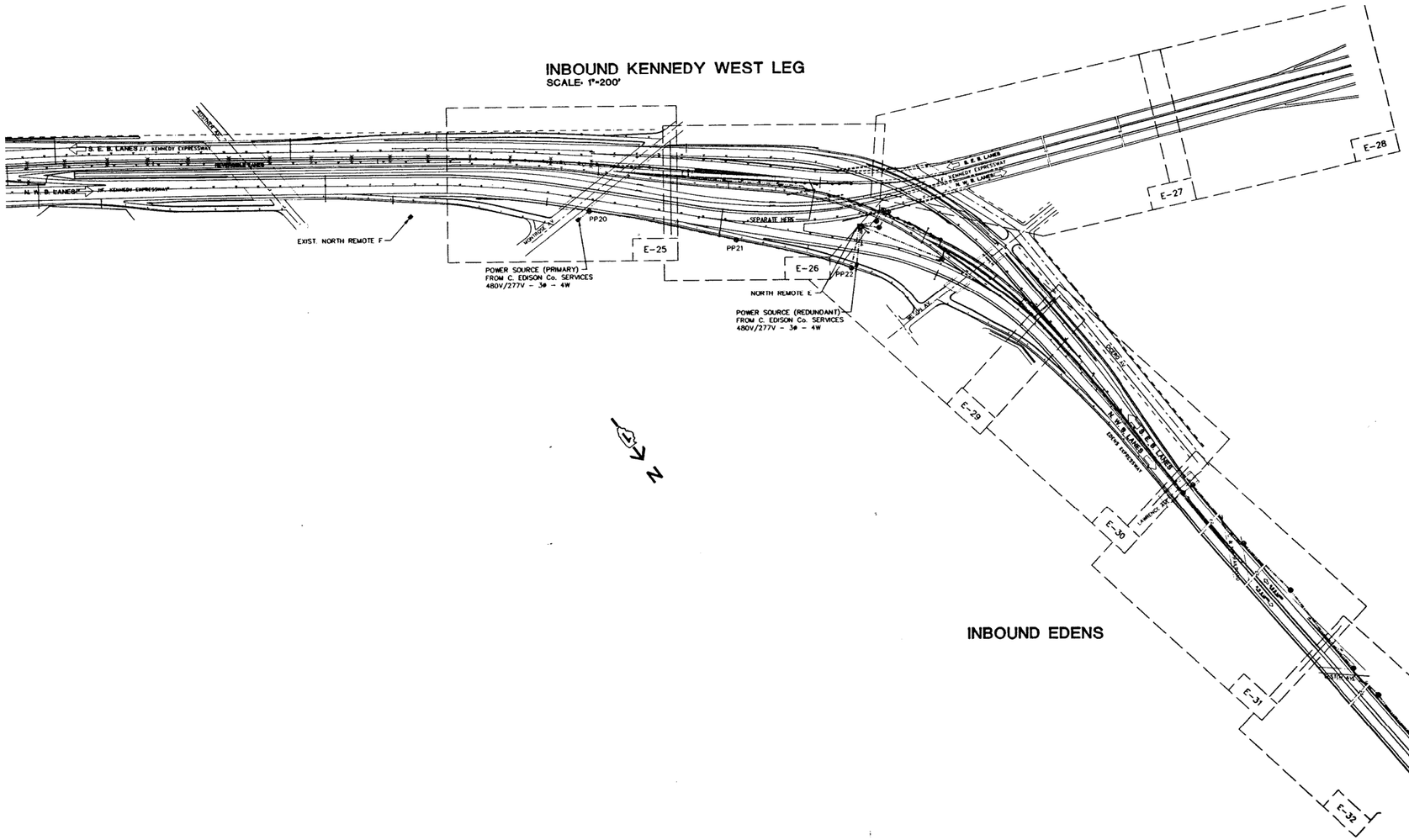

NOTES:

1. THE ABOVE DRAWINGS REPRESENT AS LET DESIGN TO AID CONTRACTOR IN ASCERTAINING EXISTING CONDITIONS.
2. CONTRACTOR SHALL CONTACT IDOT D1 TO REQUEST THE MOST UP TO DATE RECORD DRAWINGS AVAILABLE AT THE TIME OF LETTING.

FOR INFORMATION ONLY

J:\293\Task-2\DGN\CADD Sheets\155_D160T93-sht-details097.dgn

SINGH
CONSULTING ENGINEERS
www.singhinc.com

USER NAME = mgarvida	DESIGNED - DJ/AG	REVISED -	
FILE NAME = 155_D160T93-sht-details097	DRAWN - DS/AS	REVISED -	
PLOT SCALE = 2.000000:1.000000	CHECKED - IY	REVISED -	
PLOT DATE = 06-MAY-2015 16:05	DATE - 5/6/2015	REVISED -	

STATE OF ILLINOIS
DEPARTMENT OF TRANSPORTATION

INBOUND EDENS/KENNEDY ORIENTATION PLAN

SCALE: NTS | SHEET OF SHEETS | STA. TO STA.

F.A.I. RTE.	SECTION	COUNTY	TOTAL SHEETS	SHEET NO.
90/94	2012-0521	COOK	165	155
		CONTRACT NO. 60T93		
	ILLINOIS	FED. AID PROJECT		

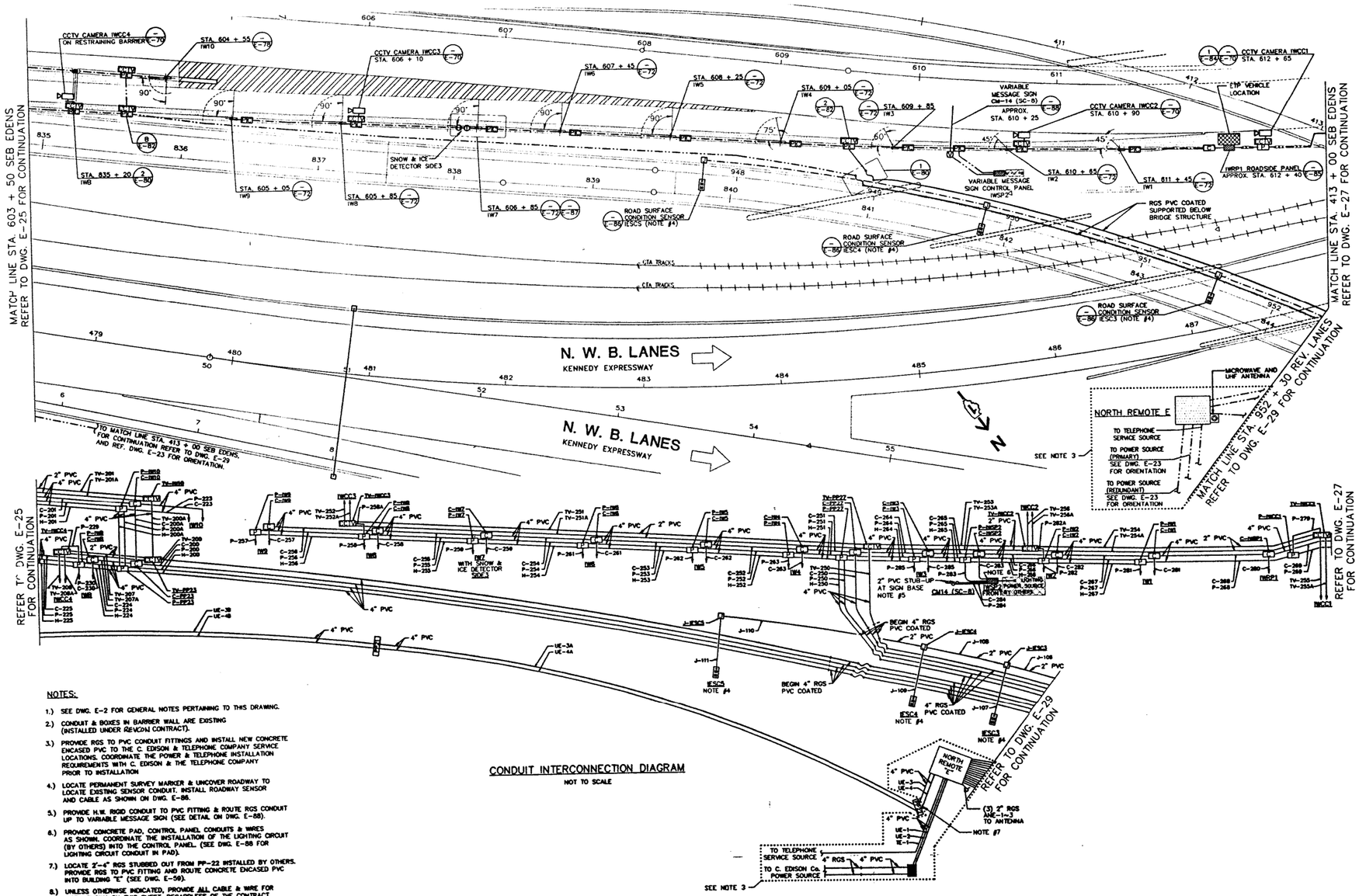

NOTES:

1.) SEE DWG. E-2 FOR GENERAL NOTES PERTAINING TO THIS DRAWING.

2.) CONDUIT & BOXES IN BARRIER WALL ARE EXISTING (INSTALLED UNDER REVCON CONTRACT).

3.) PROVIDE RGS TO PVC CONDUIT FITTINGS AND INSTALL NEW CONCRETE ENCASED PVC TO THE C. EDISON & TELEPHONE COMPANY SERVICE LOCATIONS. COORDINATE THE POWER & TELEPHONE INSTALLATION REQUIREMENTS WITH C. EDISON & THE TELEPHONE COMPANY PRIOR TO INSTALLATION

4.) LOCATE PERMANENT SURVEY MARKER & UNCOVER ROADWAY TO LOCATE EXISTING SENSOR CONDUIT. INSTALL ROADWAY SENSOR AND CABLE AS SHOWN ON DWG. E-86.

5.) PROVIDE H.W. RIGID CONDUIT TO PVC FITTING & ROUTE RGS CONDUIT UP TO VARIABLE MESSAGE SIGN (SEE DETAIL ON DWG. E-88).

6.) PROVIDE CONCRETE PAD, CONTROL PANEL CONDUITS & WIRES AS SHOWN. COORDINATE THE INSTALLATION OF THE LIGHTING CIRCUIT (BY OTHERS) INTO THE CONTROL PANEL. (SEE DWG. E-88 FOR LIGHTING CIRCUIT CONDUIT IN PAD).

7.) LOCATE 2"-4" RGS STUBBED OUT FROM PP-22 INSTALLED BY OTHERS. PROVIDE RGS TO PVC FITTING AND ROUTE CONCRETE ENCASED PVC INTO BUILDING "E" (SEE DWG. E-59).

8.) UNLESS OTHERWISE INDICATED, PROVIDE ALL CABLE & WIRE FOR WORK SHOWN ON THIS SHEET, REGARDLESS OF THE CONTRACT UNDER WHICH THE RACEWAY IS PROVIDED.

9.) UNLESS OTHERWISE INDICATED, CONDUIT & BOXES NOT SHOWN WITHIN BOXED-OUT DASHED LINE IS EXISTING, OR WILL BE PROVIDED UNDER CONTRACT BY OTHERS.

CONDUIT INTERCONNECTION DIAGRAM

NOT TO SCALE

NOTES:

1. THE ABOVE DRAWINGS REPRESENT AS LET DESIGN TO AID CONTRACTOR IN ASCERTAINING EXISTING CONDITIONS.

2. CONTRACTOR SHALL CONTACT IDOT D1 TO REQUEST THE MOST UP TO DATE RECORD DRAWINGS AVAILABLE AT THE TIME OF LETTING.

FOR INFORMATION ONLY

J:\293\Task-2\DGN\CADD Sheets\156_D160T93-sht-details098.dgn

SINGH
CONSULTING ENGINEERS
www.singhinc.com

USER NAME = mgarvida	DESIGNED - DJ/AG	REVISED -	
FILE NAME = 156_D160T93-sht-details098	DRAWN - DS/AS	REVISED -	
PLOT SCALE = 2.000000:1.000000	CHECKED - IY	REVISED -	
PLOT DATE = 06-MAY-2015 16:05	DATE - 5/6/2015	REVISED -	

STATE OF ILLINOIS
DEPARTMENT OF TRANSPORTATION

INBOUND KENNEDY POWER & CONTROL PLAN

SCALE: NTS | SHEET OF SHEETS | STA. TO STA.

F.A.I. RTE.	SECTION	COUNTY	TOTAL SHEETS	SHEET NO.
90/94	2012-0521	COOK	165	156

CONTRACT NO. 60T93

ILLINOIS FED. AID PROJECT

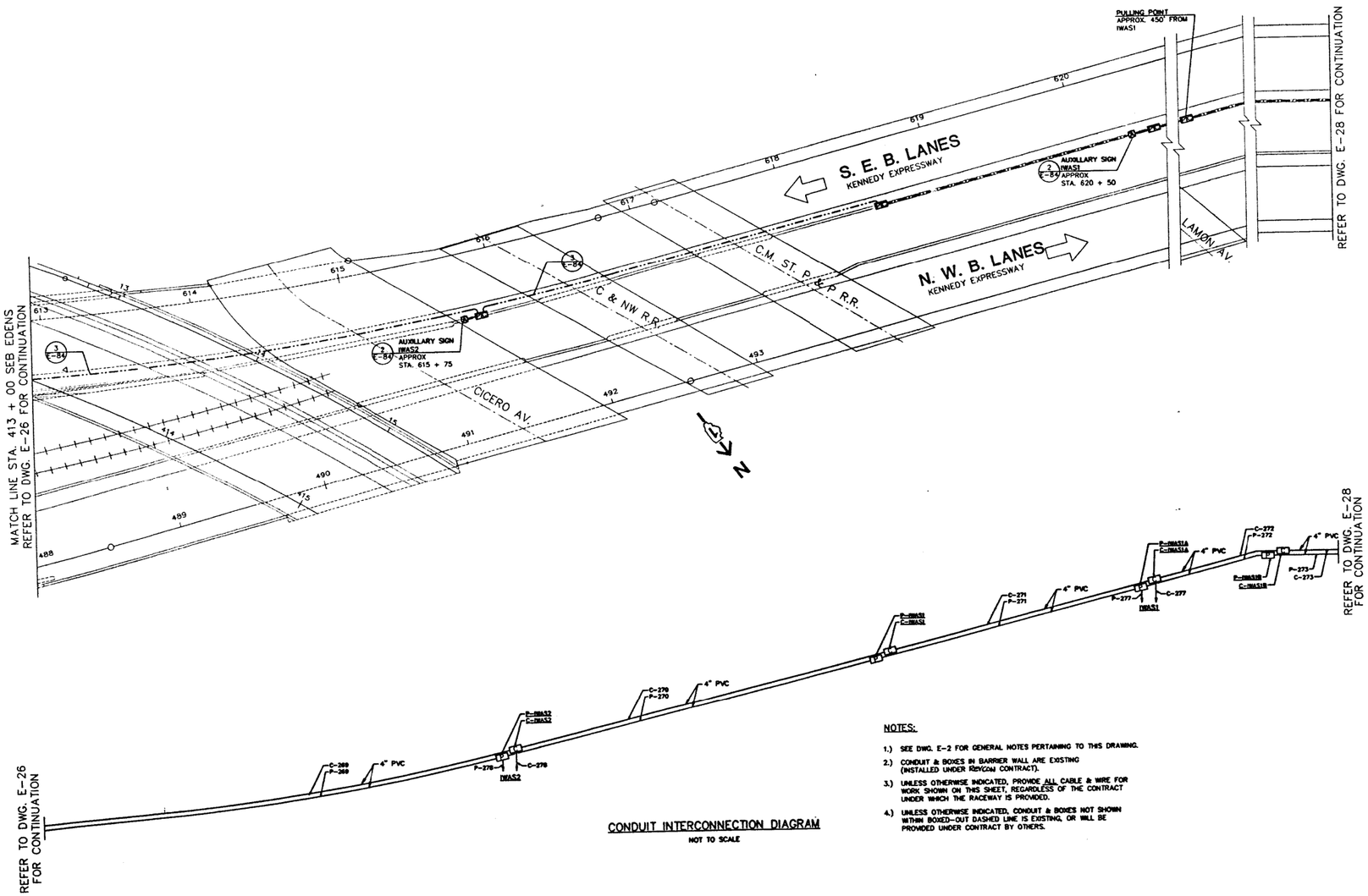

CONDUIT INTERCONNECTION DIAGRAM

NOT TO SCALE

NOTES:

1.) SEE DWG. E-2 FOR GENERAL NOTES PERTAINING TO THIS DRAWING.

2.) CONDUIT & BOXES IN BARRIER WALL ARE EXISTING (INSTALLED UNDER REVICON CONTRACT).

3.) UNLESS OTHERWISE INDICATED, PROVIDE ALL CABLE & WIRE FOR WORK SHOWN ON THIS SHEET, REGARDLESS OF THE CONTRACT UNDER WHICH THE RACEWAY IS PROVIDED.

4.) UNLESS OTHERWISE INDICATED, CONDUIT & BOXES NOT SHOWN WITHIN BOXED-OUT DASHED LINE IS EXISTING, OR WILL BE PROVIDED UNDER CONTRACT BY OTHERS.

NOTES:

1. THE ABOVE DRAWINGS REPRESENT AS LET DESIGN TO AID CONTRACTOR IN ASCERTAINING EXISTING CONDITIONS.
2. CONTRACTOR SHALL CONTACT IDOT D1 TO REQUEST THE MOST UP TO DATE RECORD DRAWINGS AVAILABLE AT THE TIME OF LETTING.

FOR INFORMATION ONLY

J:\293\Task-2\DGN\CADD Sheets\157_D160T93-sht-details099.dgn

SINGH
CONSULTING ENGINEERS
www.singhinc.com

USER NAME = mgarvida	DESIGNED - DJ/AG	REVISED -	
FILE NAME = 157_D160T93-sht-details099	DRAWN - DS/AS	REVISED -	
PLOT SCALE = 2.000000:1.000000	CHECKED - IY	REVISED -	
PLOT DATE = 06-MAY-2015 16:06	DATE - 5/6/2015	REVISED -	

STATE OF ILLINOIS
DEPARTMENT OF TRANSPORTATION

INBOUND KENNEDY POWER & CONTROL PLAN

SCALE: NTS | SHEET OF SHEETS | STA. TO STA.

F.A.I. RTE.	SECTION	COUNTY	TOTAL SHEETS	SHEET NO.
90/94	2012-0521	COOK	165	157
		CONTRACT NO. 60T93		
		ILLINOIS FED. AID PROJECT		

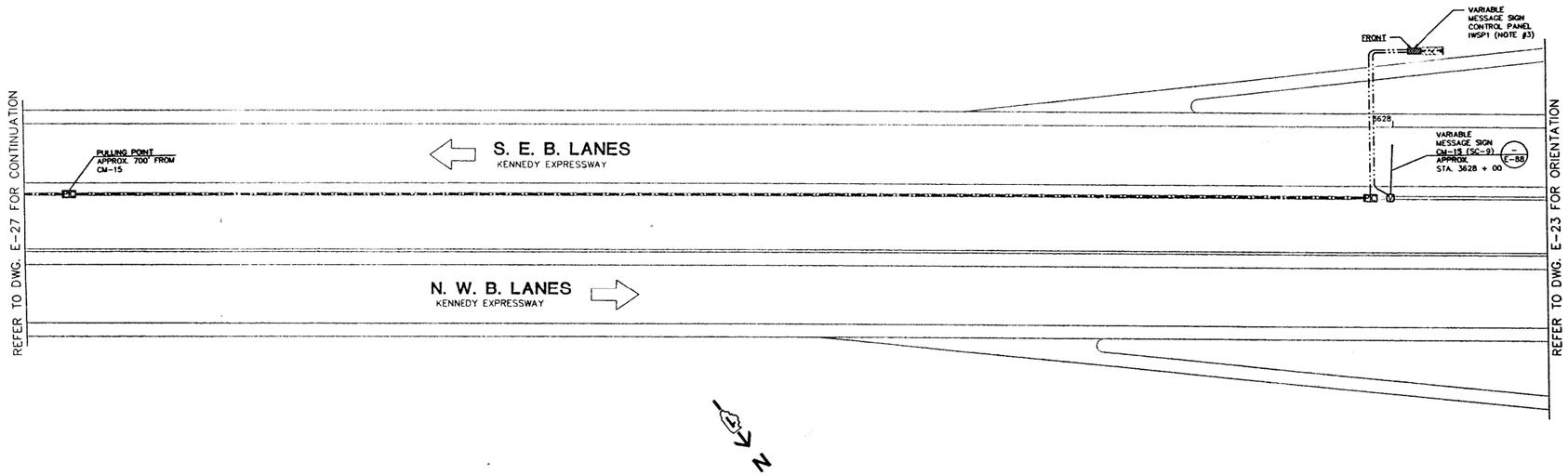

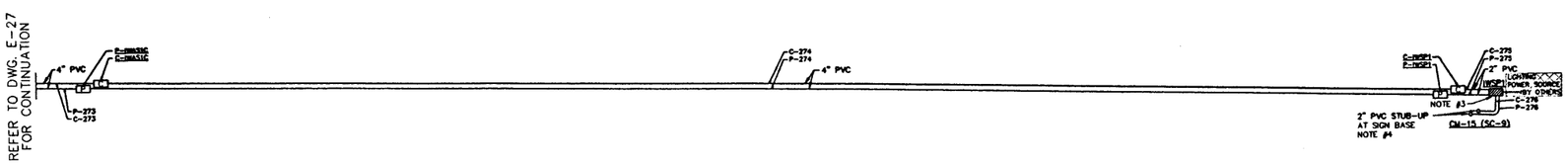

CONDUIT INTERCONNECTION DIAGRAM

NOT TO SCALE

NOTES:

1.) SEE DWG. E-2 FOR GENERAL NOTES PERTAINING TO THIS DRAWING.

2.) CONDUIT & BOXES IN BARRIER WALL ARE EXISTING (INSTALLED UNDER RemCon CONTRACT).

3.) PROVIDE CONCRETE PAD, CONTROL PANEL CONDUITS & WIRES AS SHOWN. COORDINATE THE INSTALLATION OF THE LIGHTING CIRCUIT (BY OTHERS) INTO THE CONTROL PANEL. (SEE DWG. E-88 FOR LIGHTING CIRCUIT CONDUIT IN PAD).

4.) PROVIDE PVC TO H.W. RIGID CONDUIT FITTINGS & ROUTE RGS CONDUITS UP TO VARIABLE MESSAGE SIGN. <SEE DWG. E-86

5.) UNLESS OTHERWISE INDICATED, PROVIDE ALL CABLE & WIRE FOR WORK SHOWN ON THIS SHEET, REGARDLESS OF THE CONTRACT UNDER WHICH THE RACEWAY IS PROVIDED.

6.) UNLESS OTHERWISE INDICATED, CONDUIT & BOXES NOT SHOWN WITHIN BOXED-OUT DASHED LINE IS EXISTING, OR WILL BE PROVIDED UNDER CONTRACT BY OTHERS.

NOTES:

1. THE ABOVE DRAWINGS REPRESENT AS LET DESIGN TO AID CONTRACTOR IN ASCERTAINING EXISTING CONDITIONS.

2. CONTRACTOR SHALL CONTACT IDOT D1 TO REQUEST THE MOST UP TO DATE RECORD DRAWINGS AVAILABLE AT THE TIME OF LETTING.

FOR INFORMATION ONLY

J:\293\Task-2\DGN\CADD Sheets\158_D160T93-sht-details100.dgn

SINGH
CONSULTING ENGINEERS
www.singhinc.com

USER NAME = mgarvida	DESIGNED - DJ/AG	REVISED -	
FILE NAME = 158_D160T93-sht-details100	DRAWN - DS/AS	REVISED -	
PLOT SCALE = 2.000000:1.000000	CHECKED - IY	REVISED -	
PLOT DATE = 06-MAY-2015 16:07	DATE - 5/6/2015	REVISED -	

STATE OF ILLINOIS
DEPARTMENT OF TRANSPORTATION

INBOUND KENNEDY POWER & CONTROL PLAN

SCALE: NTS | SHEET OF SHEETS | STA. TO STA.

F.A.I. RTE.	SECTION	COUNTY	TOTAL SHEETS	SHEET NO.
90/94	2012-0521	COOK	165	158
		CONTRACT NO. 60T93		
	ILLINOIS	FED. AID PROJECT		

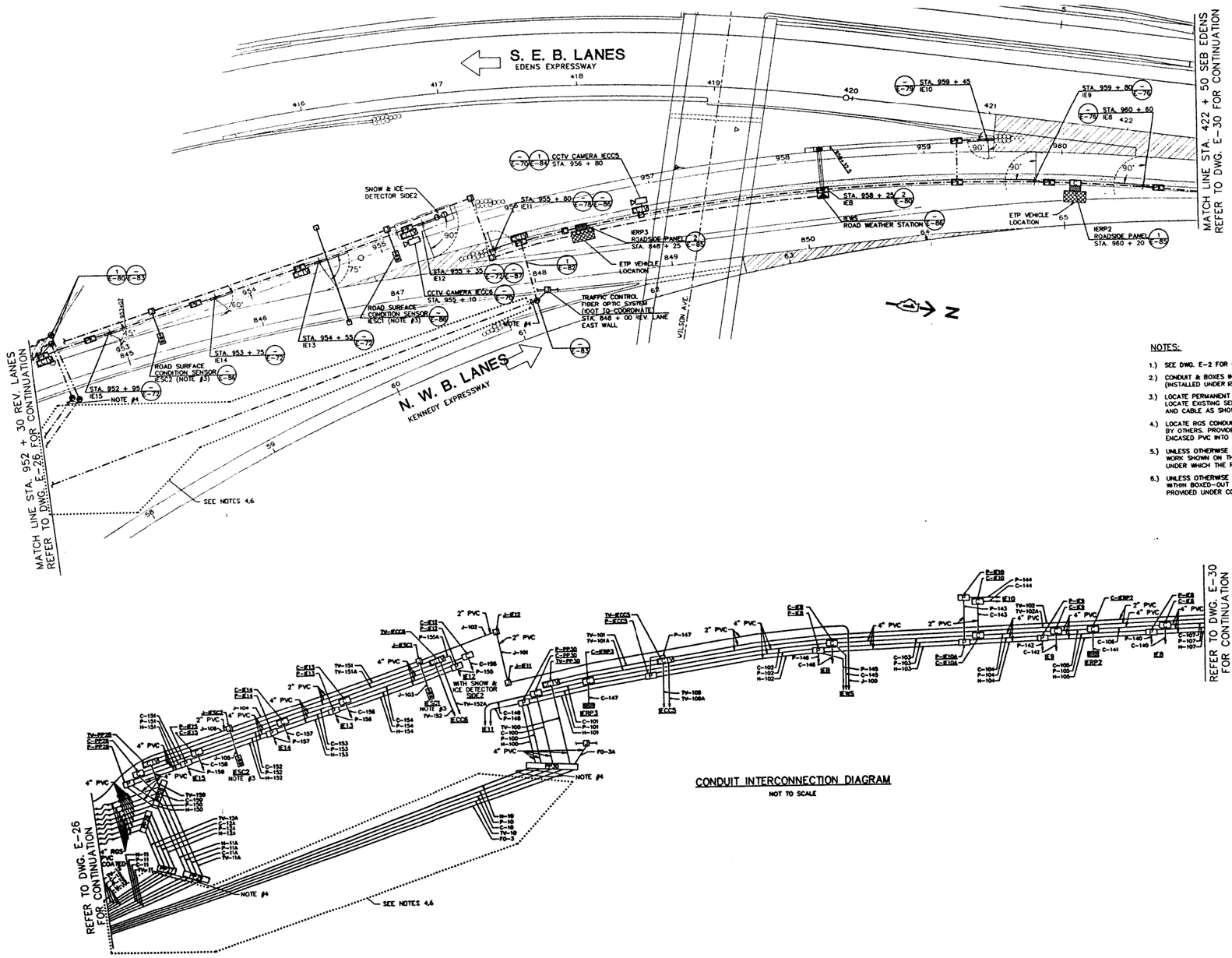

NOTES:

1.) SEE DWG. E-2 FOR GENERAL NOTES PERTAINING TO THIS DRAWING.

2.) CONDUIT & BOXES IN BARRIER WALL ARE EXISTING (INSTALLED UNDER REVCOM CONTRACT).

3.) LOCATE PERMANENT SURVEY MARKER & UNCOVER ROADWAY TO LOCATE EXISTING SENSOR CONDUIT. INSTALL ROADWAY SENSOR AND CABLE AS SHOWN ON DWG. E-86.

4.) LOCATE RGS CONDUITS STUBBED OUT FROM PULL BOX BY OTHERS. PROVIDE RGS TO PVC FITTING & ROUTE CONCRETE ENCASED PVC INTO BUILDING "E" (SEE DWG. E-59).

5.) UNLESS OTHERWISE INDICATED, PROVIDE ALL CABLE & WIRE FOR WORK SHOWN ON THIS SHEET, REGARDLESS OF THE CONTRACT UNDER WHICH THE RACEWAY IS PROVIDED.

6.) UNLESS OTHERWISE INDICATED, CONDUIT & BOXES NOT SHOWN WITHIN BOXED-OUT DASHED LINE IS EXISTING, OR WILL BE PROVIDED UNDER CONTRACT BY OTHERS.

CONDUIT INTERCONNECTION DIAGRAM

NOT TO SCALE

NOTES:

1. THE ABOVE DRAWINGS REPRESENT AS LET DESIGN TO AID CONTRACTOR IN ASCERTAINING EXISTING CONDITIONS.

2. CONTRACTOR SHALL CONTACT IDOT D1 TO REQUEST THE MOST UP TO DATE RECORD DRAWINGS AVAILABLE AT THE TIME OF LETTING.

FOR INFORMATION ONLY

J:\293\Task-2\DGN\CADD Sheets\159_D160T93-sht-details01.dgn

SINGH
CONSULTING ENGINEERS
www.singhinc.com

USER NAME = mgarvida	DESIGNED - DJ/AG	REVISED -	
FILE NAME = 159_D160T93-sht-details01	DRAWN - DS/AS	REVISED -	
PLOT SCALE = 2.0000000:1.000000	CHECKED - IY	REVISED -	
PLOT DATE = 06-MAY-2015 16:08	DATE - 5/6/2015	REVISED -	

STATE OF ILLINOIS
DEPARTMENT OF TRANSPORTATION

INBOUND EDENS POWER & CONTROL PLAN

SCALE: NTS | SHEET OF SHEETS | STA. TO STA.

F.A.I. RTE.	SECTION	COUNTY	TOTAL SHEETS	SHEET NO.
90/94	2012-0521	COOK	165	159
		CONTRACT NO. 60T93		
	ILLINOIS	FED. AID PROJECT		

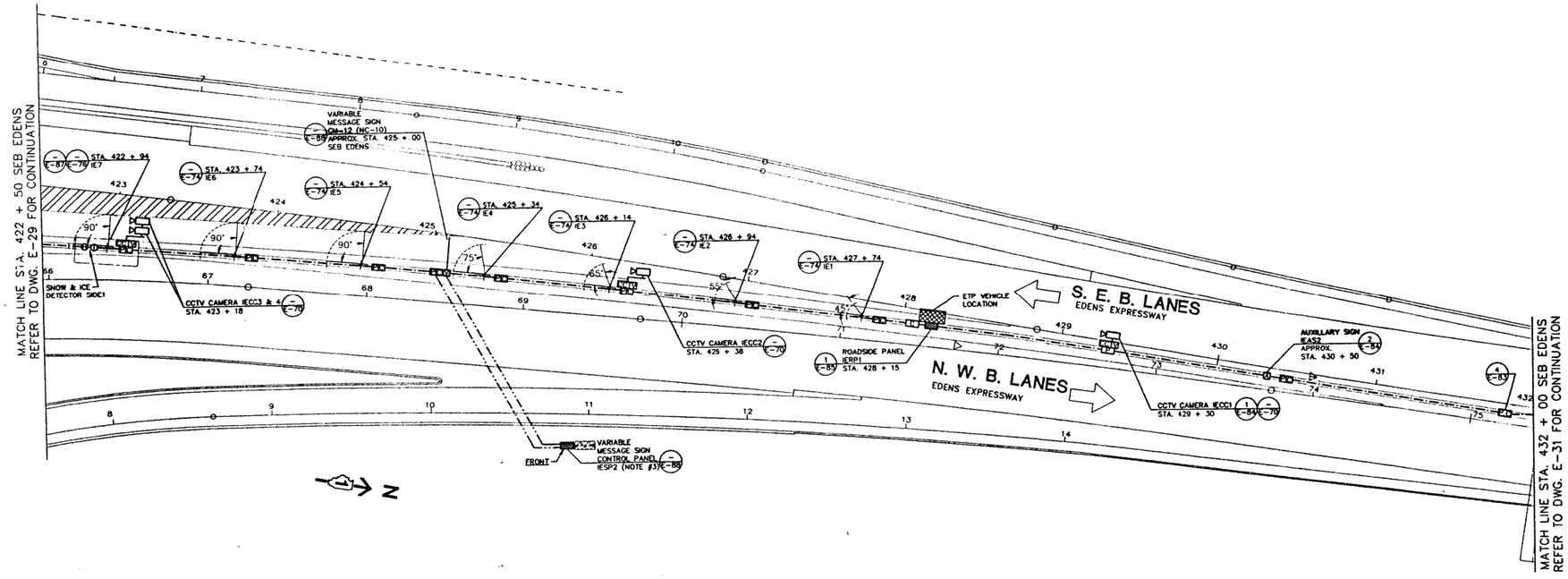

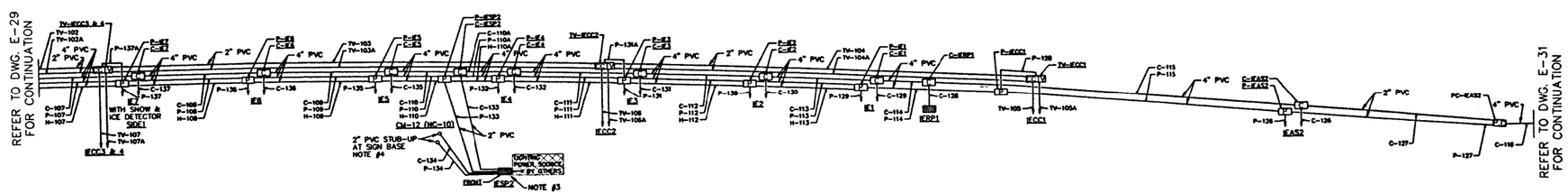

CONDUIT INTERCONNECTION DIAGRAM

NOT TO SCALE

NOTES:

1. THE ABOVE DRAWINGS REPRESENT AS LET DESIGN TO AID CONTRACTOR IN ASCERTAINING EXISTING CONDITIONS.
2. CONTRACTOR SHALL CONTACT IDOT D1 TO REQUEST THE MOST UP TO DATE RECORD DRAWINGS AVAILABLE AT THE TIME OF LETTING.

FOR INFORMATION ONLY

J:\293\Task-2\DGN\CADD Sheets\160_D160T93-sht-details02.dgn

SINGH CONSULTING ENGINEERS www.singhinc.com	USER NAME = mgarvida	DESIGNED - DJ/AG	REVISED -	STATE OF ILLINOIS DEPARTMENT OF TRANSPORTATION	INBOUND EDENS POWER & CONTROL PLAN				F.A.I. RTE.	SECTION	COUNTY	TOTAL SHEETS	SHEET NO.
	FILE NAME = 160_D160T93-sht-details02	DRAWN - DS/AS	REVISED -						90/94	2012-0521	COOK	165	160
	PLOT SCALE = 2.000000:1.000000	CHECKED - IY	REVISED -								CONTRACT NO. 60T93		
	PLOT DATE = 06-MAY-2015 16:09	DATE - 5/6/2015	REVISED -		SCALE: NTS	SHEET OF SHEETS	STA.	TO STA.		ILLINOIS	FED. AID PROJECT		

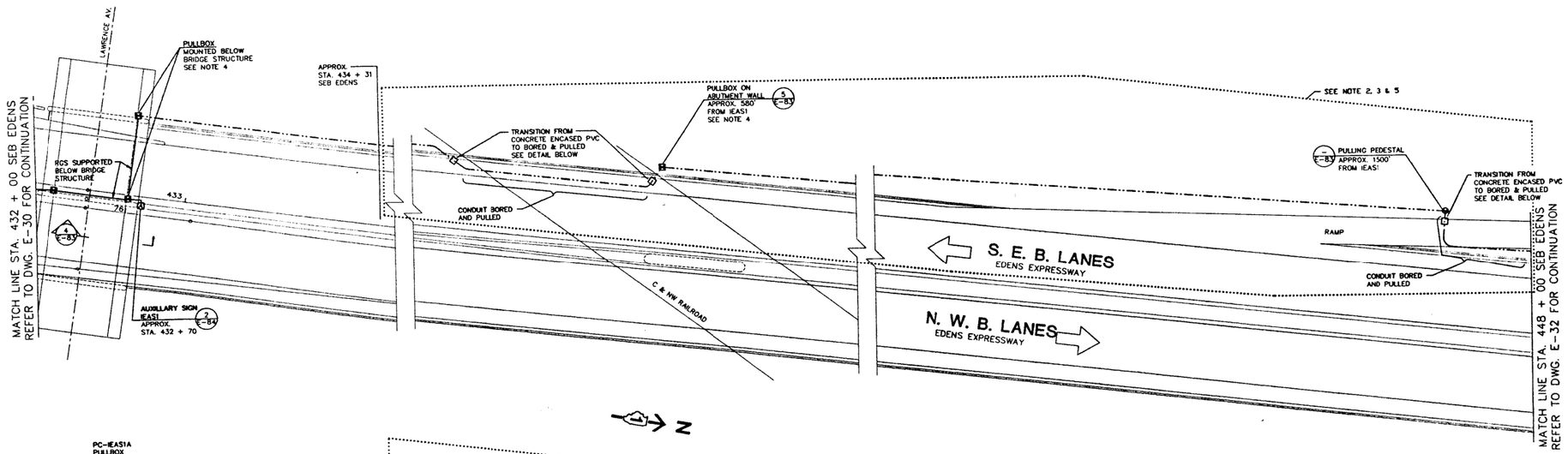

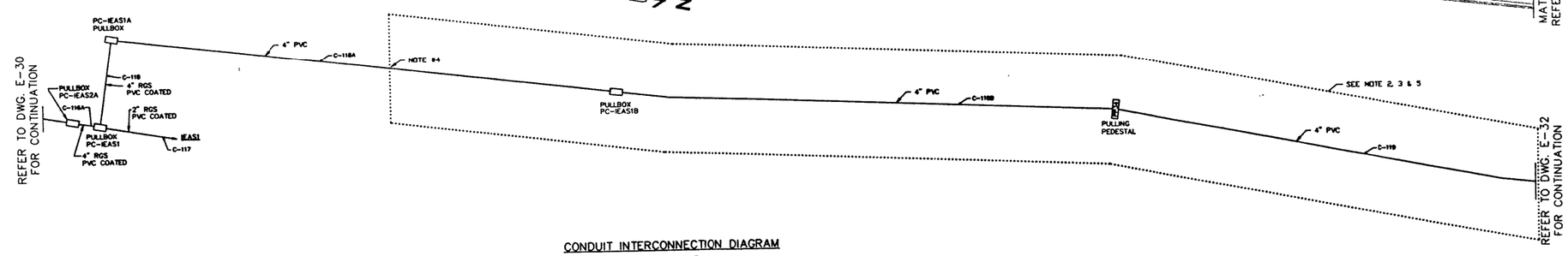

CONDUIT INTERCONNECTION DIAGRAM

NOT TO SCALE

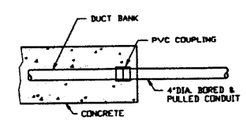

CONDUIT TO BE BORED & PULLED TRANSITION

NOTES:

1.) SEE DWG. E-2 FOR GENERAL NOTES PERTAINING TO THIS DRAWING.

2.) UNLESS OTHERWISE INDICATED, PROVIDE ALL CABLE & WIRE FOR WORK SHOWN ON THIS SHEET, REGARDLESS OF THE CONTRACT UNDER WHICH THE RACEWAY IS PROVIDED.

3.) UNLESS OTHERWISE INDICATED, CONDUIT & BOXES NOT SHOWN WITHIN BOXED-OUT DASHED LINE IS EXISTING, OR WILL BE PROVIDED UNDER CONTRACT BY OTHERS.

4.) LOCATE EXISTING CONCRETE ENCASED PVC INSTALLED BY OTHERS. PROVIDE PVC FITTING & CONTINUE CONCRETE ENCASED PVC AS SHOWN.

5.) LOCATE PULLING PEDESTAL A MINIMUM OF 8'-0" FROM EDGE OF ROAD, OR AS DIRECTED BY THE ENGINEER.

NOTES:

1. THE ABOVE DRAWINGS REPRESENT AS LET DESIGN TO AID CONTRACTOR IN ASCERTAINING EXISTING CONDITIONS.
2. CONTRACTOR SHALL CONTACT IDOT D1 TO REQUEST THE MOST UP TO DATE RECORD DRAWINGS AVAILABLE AT THE TIME OF LETTING.

FOR INFORMATION ONLY

J:\293\Task-2\DGN\CADD Sheets\161_D160T93-sht-details03.dgn

SINGH
CONSULTING ENGINEERS
www.singhinc.com

USER NAME = mgarvida	DESIGNED - DJ/AG	REVISED -	
FILE NAME = 161_D160T93-sht-details03	DRAWN - DS/AS	REVISED -	
PLOT SCALE = 2.000000:1.000000	CHECKED - IY	REVISED -	
PLOT DATE = 06-MAY-2015 16:10	DATE - 5/6/2015	REVISED -	

STATE OF ILLINOIS
DEPARTMENT OF TRANSPORTATION

INBOUND EDENS POWER & CONTROL PLAN

SCALE: NTS | SHEET OF SHEETS | STA. TO STA.

F.A.I. RTE.	SECTION	COUNTY	TOTAL SHEETS	SHEET NO.
90/94	2012-0521	COOK	165	161
		CONTRACT NO. 60T93		
	ILLINOIS	FED. AID PROJECT		

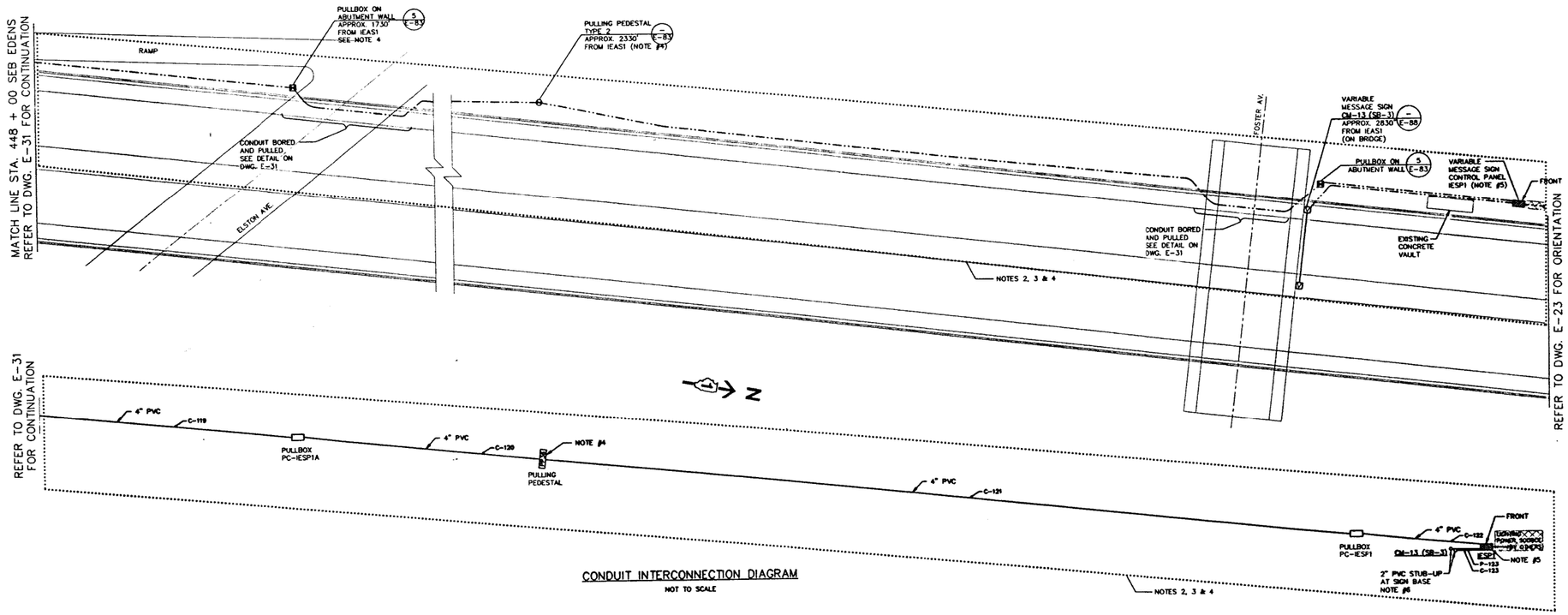

CONDUIT INTERCONNECTION DIAGRAM

NOT TO SCALE

NOTES:

1.) SEE DWG. E-2 FOR GENERAL NOTES PERTAINING TO THIS DRAWING.

2.) UNLESS OTHERWISE INDICATED, PROVIDE ALL CABLE & WIRE FOR WORK SHOWN ON THIS SHEET, REGARDLESS OF THE CONTRACT UNDER WHICH THE RACEWAY IS PROVIDED.

3.) UNLESS OTHERWISE INDICATED, CONDUIT & BOXES NOT SHOWN WITHIN BOXED-OUT DASHED LINE IS EXISTING, OR WILL BE PROVIDED UNDER CONTRACT BY OTHERS.

4.) LOCATE PULLING PEDESTAL A MINIMUM OF 8'-0" FROM EDGE OF ROAD, OR AS DIRECTED BY THE ENGINEER.

5.) PROVIDE CONCRETE PAD, CONTROL PANEL, CONDUITS & WIRES AS SHOWN. COORDINATE THE INSTALLATION OF THE LIGHTING CIRCUIT (BY OTHERS) INTO THE CONTROL PANEL. (SEE DWG. E-88 FOR LIGHTING CIRCUIT CONDUIT IN PAD).

6.) PROVIDE PVC TO H.W. RIGID CONDUIT FITTINGS & ROUTE RGS CONDUITS UP TO VARIABLE MESSAGE SIGN. SEE DWGS E-88.

NOTES:

1. THE ABOVE DRAWINGS REPRESENT AS LET DESIGN TO AID CONTRACTOR IN ASCERTAINING EXISTING CONDITIONS.
2. CONTRACTOR SHALL CONTACT IDOT D1 TO REQUEST THE MOST UP TO DATE RECORD DRAWINGS AVAILABLE AT THE TIME OF LETTING.

FOR INFORMATION ONLY

J:\293\Task-2\DGN\CADD Sheets\162_D160T93-sht-details04.dgn

SINGH
CONSULTING ENGINEERS
www.singhinc.com

USER NAME = mgarvida	DESIGNED - DJ/AG	REVISED -	
FILE NAME = 162_D160T93-sht-details04	DRAWN - DS/AS	REVISED -	
PLOT SCALE = 2.000000:1.000000	CHECKED - IY	REVISED -	
PLOT DATE = 06-MAY-2015 16:11	DATE - 5/6/2015	REVISED -	

STATE OF ILLINOIS
DEPARTMENT OF TRANSPORTATION

INBOUND EDENS POWER & CONTROL PLAN

SCALE: NTS | SHEET OF SHEETS | STA. TO STA.

F.A.I. RTE.	SECTION	COUNTY	TOTAL SHEETS	SHEET NO.
90/94	2012-0521	COOK	165	162
		CONTRACT NO. 60T93		
		ILLINOIS FED. AID PROJECT		

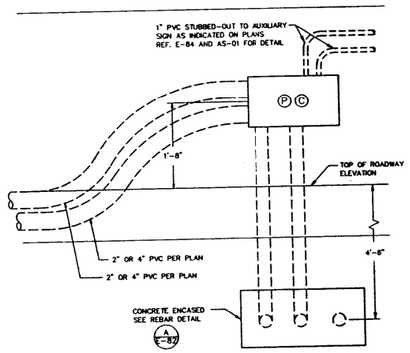

2 ELEVATION AT BARRIER WALL
END OF CONDUIT RUN

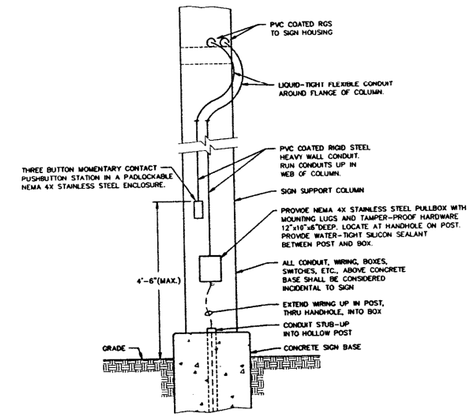

VARIABLE MESSAGE SIGN CONDUIT DETAIL
NOT TO SCALE

ARRANGEMENTS SIMILAR FOR OPPOSITE HAND SEE PLANS FOR ORIENTATION

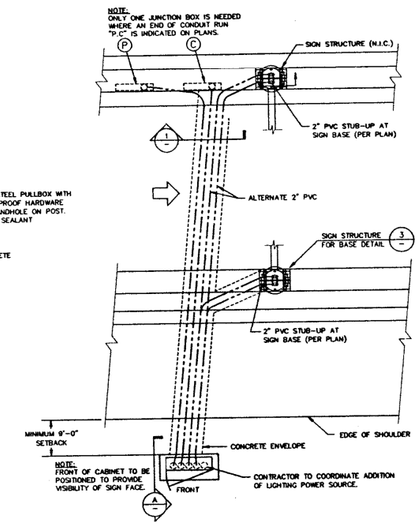

4 ROADWAY VARIABLE MESSAGE SIGN
PLAN VIEW - FOR ROUTING OF CONDUITS TO BE UNDER ROADWAY
NOT TO SCALE

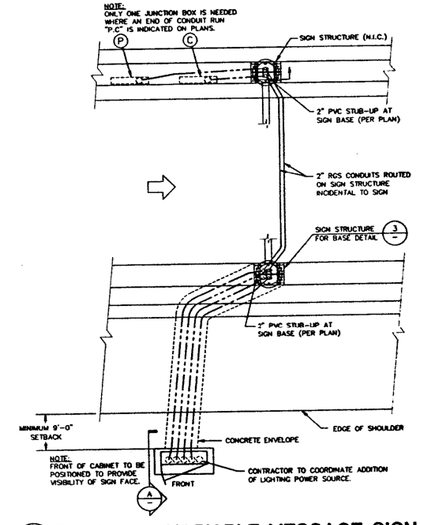

5 ROADWAY VARIABLE MESSAGE SIGN
PLAN VIEW - FOR ROUTING OF CONDUITS TO BE ON SIGN STRUCTURE
NOT TO SCALE

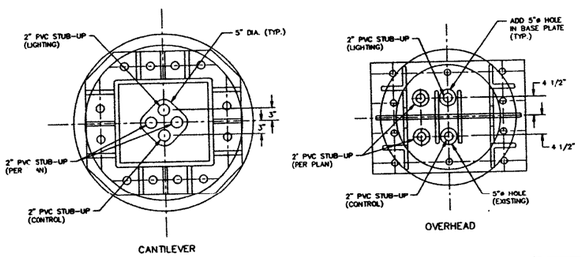

3 SIGN STRUCTURE BASE (N.I.C.)
NOT TO SCALE

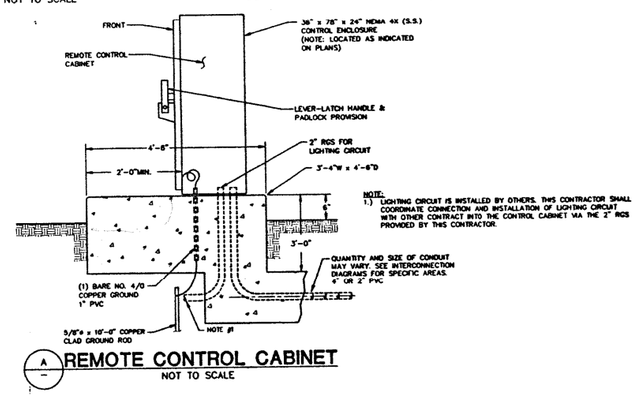

A REMOTE CONTROL CABINET
NOT TO SCALE

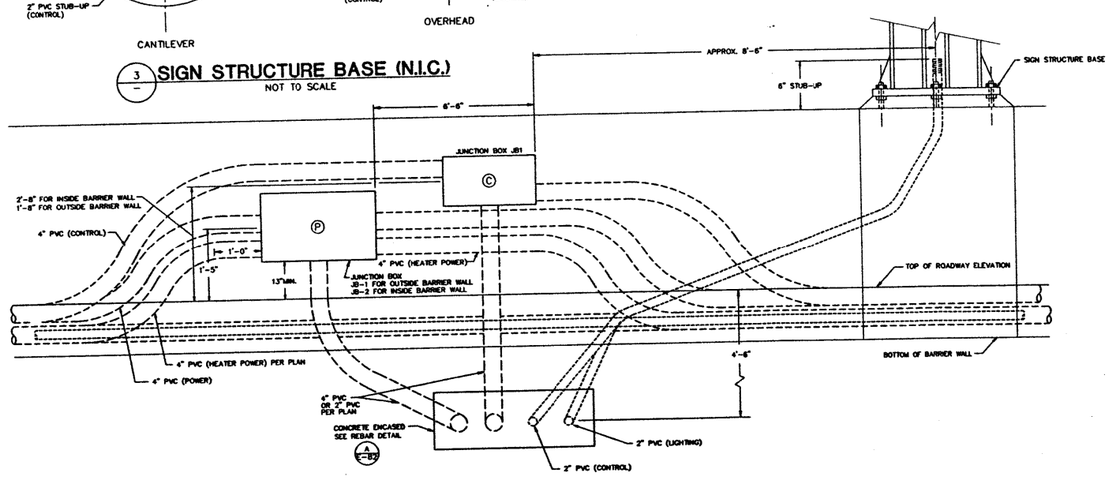

1 ELEVATION AT BARRIER WALL

NOTES:

1. REGULAR TEXT
   REGULAR TEXT
   REGULAR TEXT

2. REGULAR TEXT
   REGULAR TEXT
   REGULAR TEXT

FOR INFORMATION ONLY

J:\293\Task-2\DGN\CADD Sheets\163_D160T93-sht-details05.dgn

SINGH CONSULTING ENGINEERS www.singhinc.com	USER NAME = mgarvida	DESIGNED - DJ/AG	REVISED -	STATE OF ILLINOIS DEPARTMENT OF TRANSPORTATION	VARIABLE MESSAGE SIGN CONDUIT DETAILS	F.A.I. RTE.	SECTION	COUNTY	TOTAL SHEETS	SHEET NO.
	FILE NAME = 163_D160T93-sht-details05	DRAWN - DS/AS	REVISED -			90/94	2012-0521	COOK	165	163
	PLOT SCALE = 2.0000000:1.000000	CHECKED - IY	REVISED -					CONTRACT NO. 60T93		
	PLOT DATE = 06-MAY-2015 16:12	DATE - 5/6/2015	REVISED -		SCALE: NTS / SHEET OF SHEETS / STA. TO STA.		ILLINOIS	FED. AID PROJECT		

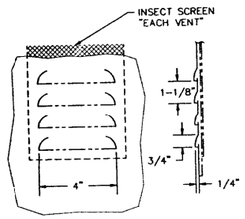

LOUVER DETAIL

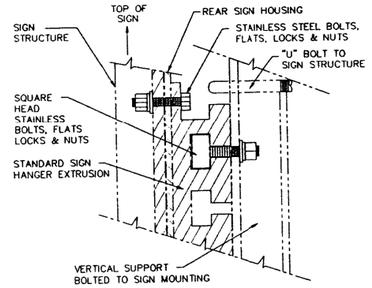

STANDARD SIGN HANGER EXTRUSION
"FULL LENGTH OF SIGN"

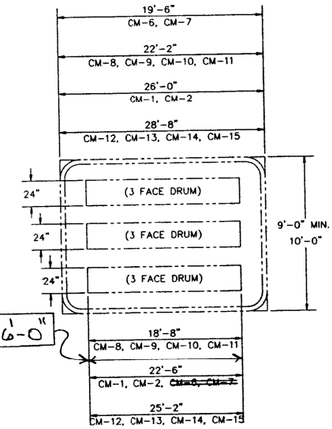

TYPICAL VARIABLE MESSAGE SIGN
3 DRUM - 3 FACE
N.T.S.

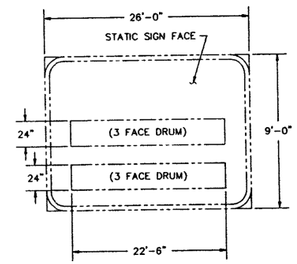

TYPICAL VARIABLE MESSAGE SIGN
2 DRUM - 3 FACE
N.T.S.
CM-3

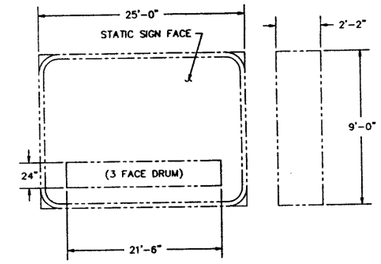

TYPICAL VARIABLE MESSAGE SIGN
1 DRUM - 3 FACE
N.T.S.
CM-4 & CM-5

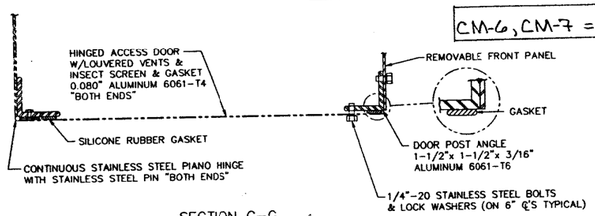

SECTION G-G
(BOTH SIDES)

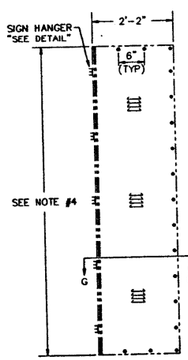

DOOR END VIEW
LEFT SIDE

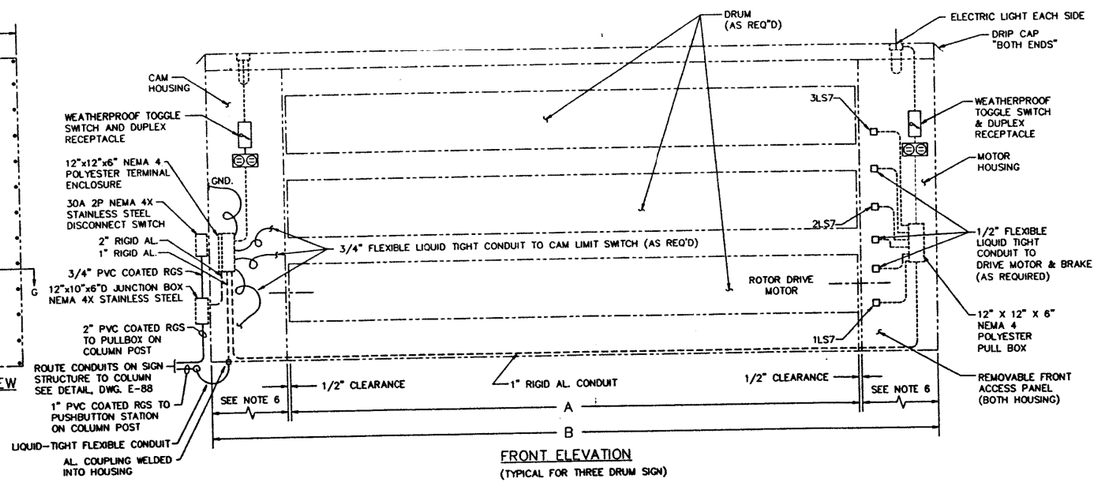

FRONT ELEVATION
(TYPICAL FOR THREE DRUM SIGN)

FOR 1 DRUM SIGN REMOVE TWO TOP DRUMS
(MAKE STATIC FACE)

FOR 2 DRUM SIGN REMOVE TOP DRUM
(MAKE STATIC FACE)

A & B (VARIES - SEE ABOVE)
ARRANGEMENT SIMILAR FOR OPPOSITE HAND
SEE PLANS FOR ORIENTATION

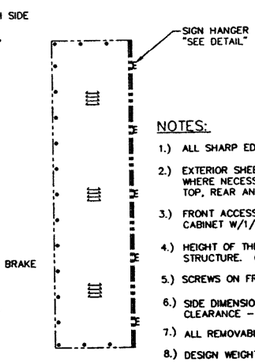

NOTES:

1.) ALL SHARP EDGES AND CORNERS TO BE ROUNDED FOR SAFETY.

2.) EXTERIOR SHEETS MAY BE SPLICED ON FRAME MEMBERS WHERE NECESSARY USING SPOT WELDS ON ± 3" CENTERS. TOP, REAR AND BOTTOM OF CABINET ONLY.

3.) FRONT ACCESS PANELS SHALL BE ATTACHED TO THE FRONT OF SIGN CABINET W/1/4"-20 S.S. SHEET METAL SCREWS ON ± 6" CENTERS.

4.) HEIGHT OF THE SIGN IS DEPENDENT UPON ADJACENT SIGN ON STRUCTURE. (CMS SIGN SHALL BE MINIMUM 9'-0".)

5.) SCREWS ON FRONT ACCESS PANEL SHALL BE PAINTED GREEN.

6.) SIDE DIMENSION TO BE AS REQUIRED FOR MOTOR AND CAM CLEARANCE - MAKE EQUAL.

7.) ALL REMOVABLE PANELS ARE TO HAVE SAFETY CHAINS.

8.) DESIGN WEIGHTS ARE TO BE 18# PER SQUARE FOOT OF SIGN FACE.

FOR INFORMATION ONLY

J:\293\Task-2\DGN\CADD Sheets\164_D160T93-sht-details06.dgn

SINGH
CONSULTING ENGINEERS
www.singhinc.com

USER NAME = mgarvida	DESIGNED - DJ/AG	REVISED -	
FILE NAME = 164_D160T93-sht-details06	DRAWN - DS/AS	REVISED -	
PLOT SCALE = 2.000000:1.000000	CHECKED - IY	REVISED -	
PLOT DATE = 06-MAY-2015 16:13	DATE - 5/6/2015	REVISED -	

STATE OF ILLINOIS
DEPARTMENT OF TRANSPORTATION

SIGN FACE AND SIGN CABINET DETAILS VARIABLE MESSAGE SIGN

SCALE: NTS | SHEET OF SHEETS | STA. TO STA.

F.A.I. RTE.	SECTION	COUNTY	TOTAL SHEETS	SHEET NO.
90/94	2012-0521	COOK	165	164
		CONTRACT NO. 60T93		
		ILLINOIS FED. AID PROJECT		

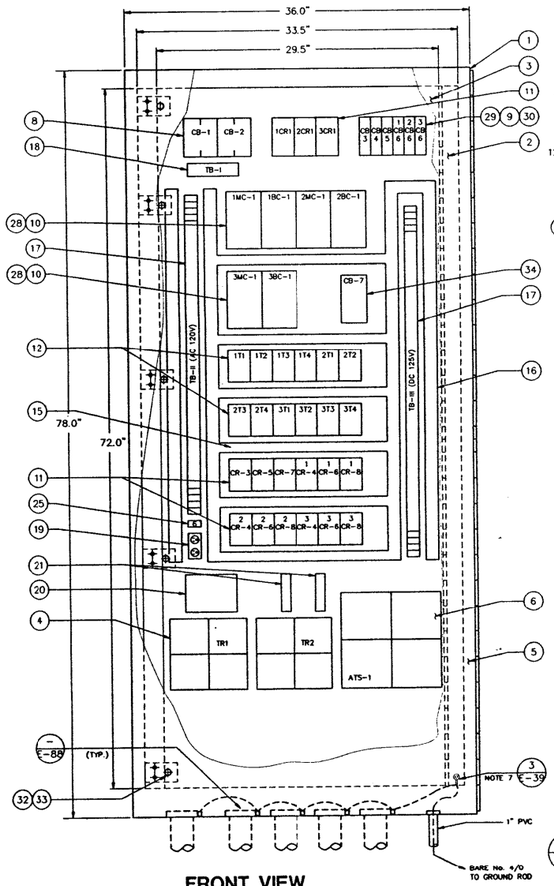

FRONT VIEW
INNER-BACK PANEL LAYOUT
NOT TO SCALE

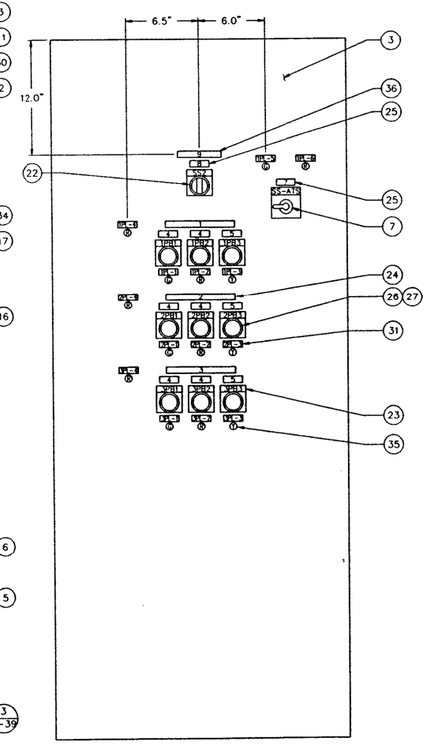

FRONT VIEW
INNER SWING-OUT PANEL LAYOUT
NOT TO SCALE

NOTES:

1.) INNER SWING-OUT CONTROL PANEL WILL REQUIRE 6 CLOSING BUTTONS, REPLACING PUSHBUTTONS, NAMEPLATES & LEGEND PLATES WHEN ONLY 1 ROTOR IS USED. WHEN 2 ROTORS ARE USED, 3 CLOSING BUTTONS ARE REQUIRED.

2.) PANEL AS SHOWN IS FOR 3 ROTOR LAYOUT.
2 ROTOR LAYOUT WILL BE MINUS DEVICES WITH A "3" PREFIX.
1 ROTOR LAYOUT WILL BE MINUS DEVICES WITH A "2" & "3" PREFIX.

3.) RELAYS, TIMERS, CONTACTORS, TERMINAL BLOCKS & SURGE SUPPRESSOR SHOWN ARE BASED ON ALLEN BRADLEY DIMENSIONS. CIRCUIT BREAKERS & TRANSFORMERS SHOWN ARE BASED ON WESTINGHOUSE DIMENSIONS. CONTROL ENCLOSURE & INNER PANEL ARE BASED ON HOFFMAN ENGINEERING STANDARDS.

4.) QUANTITY OF LED INDICATING LIGHTS & NAMEPLATES SHALL CORRESPOND WITH NUMBER OF ROTORS USED. (SEE NOTE 2)

5.) LAMINATED PHENOLIC NAMEPLATES SHALL HAVE WHITE LETTERS ON BLACK BACKGROUND. (SIZED TO LENGTH OF NAMEPLATE)

6.) DIMENSIONS & DETAILS SHOWN ARE FOR PLANNING PURPOSES ONLY. THE CONTRACTOR IS RESPONSIBLE FOR LAYOUTS & WIRING REQUIREMENTS.

7.) PROVIDE A PANEL GROUNDING AS E-39, DETAIL 3.

TABLE A

NP	ENGRAVE	QTY.
1	TOP LINE	1
2	MIDDLE LINE	NOTE 4
3	BOTTOM LINE	NOTE 4
4	EXPRESS	NOTE 4
5	BLANK	NOTE 4
6	120V AC	1
7	ATS CONTROL SWITCH	1
8	CONTROL MODE SELECTOR SWITCH	1
9	VARIABLE MESSAGE SIGN CONTROL PANEL **	1
10		

TABLE B

DEVICE	ENGRAVE
SS2	REMOTE - OFF - LOCAL
SS-ATS	NORMAL EMERGENCY
1PB1	LANE OPEN STATE
2PB1	LANE OPEN STATE
3PB1	LANE OPEN STATE
1PB2	LANE CLOSE STATE
2PB2	LANE CLOSE STATE
3PB2	LANE CLOSE STATE
1PB3	BLANK STATE
2PB3	BLANK STATE
3PB3	BLANK STATE
1PL-1	LANE OPEN STATE
2PL-1	LANE OPEN STATE
3PL-1	LANE OPEN STATE
1PL-2	LANE CLOSE STATE
2PL-2	LANE CLOSE STATE
3PL-2	LANE CLOSE STATE
1PL-3	BLANK STATE
2PL-3	BLANK STATE
3PL-3	BLANK STATE
1PL-4	MOTOR O/L
2PL-4	MOTOR O/L
3PL-4	MOTOR O/L
1PL-5	NORMAL REVLAC SUPPLY
1PL-6	EMERGENCY LIGHTING SUPPLY

ITEM	QTY.	DESCRIPTION	REMARKS
1	1	CTRL ENCL 36.0"x78.0"x24.0"DP, 10GA, ST.STL, SINGLE DOOR HINGED RIGHT SIDE, 3-POINT LATCH, PADLOCK HANDLE	
2	1	INNER BACK PANEL 33.5" x 72.0"	
3	1	INNER SWING-OUT PANEL 29.5" x 72.0", 10GA HINGED RIGHT SIDE WITH QUARTER TURN LATCHES	
4	2	CONTROL TRANSFORMER 3 KVA, 480/120V 1ø	
5	1	DOOR PANEL (HINGED RIGHT SIDE)	
6	1	AUTOMATIC TRANSFER SWITCH 30A-2P	
7	1	AUTOMATIC TRANSFER SWITCH CONTROL TOGGLE SWITCH	
8	2	CIRCUIT BREAKER 10A-2P, 480VAC	
9	*	CIRCUIT BREAKER 15A-1P, 120VAC	NOTE 2
10	*	CONTACTOR, SIZE 1, 120V OPEN TYPE	NOTE 2
11	*	CONTROL RELAY, 4P (CONV. CONT.) OPEN TYPE	NOTE 2
12	*	CONTROL RELAY, 4P (CONV. CONT.) OPEN TYPE W/SOLID-STATE TIMER (5 SEC.)	NOTE 2
13	-	-	
14	-	-	
15	AS REQ'D	WIRE DUCT 1.0" x 3.0" HIGH W/COVER	
16	AS REQ'D	WIRE DUCT 2.0" x 3.0" HIGH W/COVER	
17	AS REQ'D	TERMINAL BLOCK ASSEMBLY 300V	
18	12	TERMINAL BLOCK ASSEMBLY 600V W/COVER	
19	1	RECEPTACLE, DUPLEX W/ENCL.	
20	1	POWER LINE FILTER 30A 120VAC 60Hz	
21	2	SURGE SUPPRESSOR, SIZE 1, 120V	
22	1	SELECTOR SWITCH, 3 POSITION, 7 N.C., 1 N.O. CONTACTS ROTARY TYPE, STANDARD KNOB (4 POLES)	
23	*	LEGEND PLATES (LARGE) ENGRAVE PER TABLE B	NOTES 1 & 2
24	3	NAMEPLATES, LAMINATED PHENOLIC 0.5" x 7.5" ENGRAVE PER TABLE A	NOTES 1 & 2
25	11	NAMEPLATES, LAMINATED PHENOLIC 0.5" x 2.5" ENGRAVE PER TABLE A	
26	*	PUSHBUTTON, 1 N.C., 1 N.O. CONTACTS GREEN COLOR CAP	NOTE 1 & 2
27	*	CLOSING BUTTONS	NOTE 1
28	12'	RELAY MOUNTING RAIL	
29	2	CIRCUIT BREAKER 30A-1P, 120VAC	
30	1	CIRCUIT BREAKER 20A-1P, 120VAC	
31	AS REQ'D	NAMEPLATES, LAMINATED PHENOLIC 0.5" x 2.5" ENGRAVE PER TABLE B	
32	2	INNER SWING-OUT PANEL BRACKETS	
33	2	1/4 TURN FASTENERS (DZUS OR EQUAL)	
34	1	GFI CIRCUIT BREAKER	
35	AS REQ'D	INDICATING LIGHTS (125VDC) LED .375"DIA. 7 RED, 3 YELLOW, 4 GREEN	NOTE 4
36	1	NAMEPLATES, LAMINATED PHENOLIC 2.5" x 4.5" ENGRAVE PER TABLE A	

* SEE NOTES 1 & 2 TO DETERMINE QUANTITY
** DENOTES PANEL NOMENCLATURE

FOR INFORMATION ONLY

SINGH
CONSULTING ENGINEERS
www.singhinc.com

USER NAME = mgarvida	DESIGNED - DJ/AG	REVISED -	
FILE NAME = 165_D160T93-sht-details107	DRAWN - DS/AS	REVISED -	
PLOT SCALE = 2.000000:1.000000	CHECKED - IY	REVISED -	
PLOT DATE = 06-MAY-2015 16:14	DATE - 5/6/2015	REVISED -	

STATE OF ILLINOIS
DEPARTMENT OF TRANSPORTATION

VARIABLE MESSAGE SIGN CONTROL PANEL LAYOUT

SCALE: NTS | SHEET OF SHEETS | STA. TO STA.

F.A.I. RTE.	SECTION	COUNTY	TOTAL SHEETS	SHEET NO.
90/94	2012-0521	COOK	165	165
		CONTRACT NO. 60T93		
	ILLINOIS	FED. AID PROJECT		

J:\293\Task-2\DGN\CADD Sheets\165_D160T93-sht-details107.dgn