PLAN		BY	DATE
NOTE BOOK NO. ____	SURVEYED		
	PLOTTED		
	ALIGNMENT CHECKED		
	RT. OF WAY CHECKED		
	CADD FILE NAME		

PROFILE		BY	DATE
NOTE BOOK NO. ____	SURVEYED		
	PLOTTED		
	GRADES CHECKED		
	B.M. NOTED		
	STRUCTURE NOTATNS CHKD		

N

0′ 100′ 200′

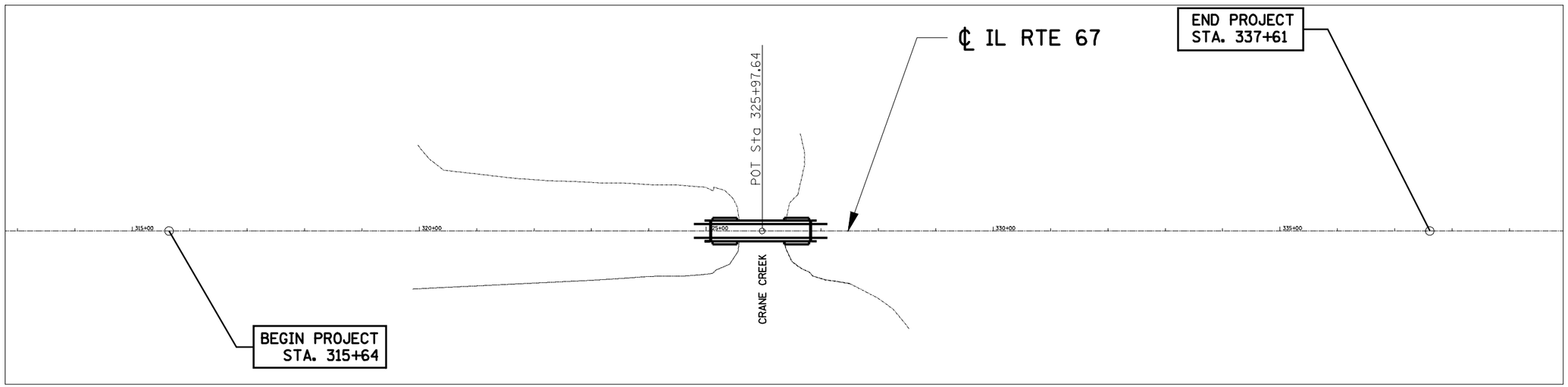

B.M. DA 1	B.M. DA 2
FOUND CHISELED "□" ON	FOUND CHISELED "□" ON
TOP OF NORTHEAST	TOP CENTER OF NORTH
CORNER BRIDGE #085-0001	CONCRETE HEADWALL
STA. 326+80, 16.6′ RT.	STA. 312+01, 22.3′ RT.
ELEV. 535.97	ELEV. 577.71

FILE NAME = c:\pw_work\PWIDOT\LAUGHLINRL\d0159736\D906008-sht-ATB.dgn	USER NAME = laughlinrl	DESIGNED - ERO	REVISED -
		DRAWN - RAW	REVISED -
	PLOT SCALE = 200.0000 ′ / IN.	CHECKED - JSA	REVISED -
	PLOT DATE = Aug-26-2009 07:27:39AM	DATE - 08/18/09	REVISED -

STATE OF ILLINOIS
DEPARTMENT OF TRANSPORTATION

ALIGNMENT, TIES, AND BENCHMARKS

SCALE: | SHEET NO. OF SHEETS | STA. TO STA.

F.A.P. RTE.	SECTION	COUNTY	TOTAL SHEETS	SHEET NO.
310	(87B)BR	SCHUYLER	80	22
		CONTRACT NO. 72B95		
		ILLINOIS FED. AID PROJECT		