CONTRACT NO. 70623

F.A.P. RTE.	SECTION	COUNTY	TOTAL SHEETS	SHEET NO.
808	*	**	715	323

* (205,57,105)RS-2
** CHAMPAIGN & DOUGLAS

XZ193300 – SURVEY MARKER, TYPE 1 (SPECIAL)

TO BE INSTALLED IN FLEXIBLE PAVEMENT OR SHOULDER, BITUMINOUS TREATED SURFACE AND TURF AREAS WITHIN THE RIGHT-OF-WAY FOR PRESERVING PERMANENT SURVEY MARKERS (PI'S, PT'S, PC'S, POC'S, & POT'S)

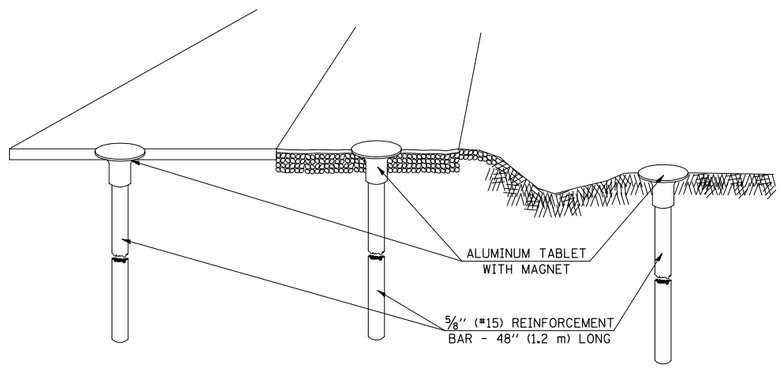

IN FLEXIBLE PAVEMENT OR SHOULDER | IN BITUMINOUS TREATED SURFACE | IN TURF AREAS WITHIN R.O.W.

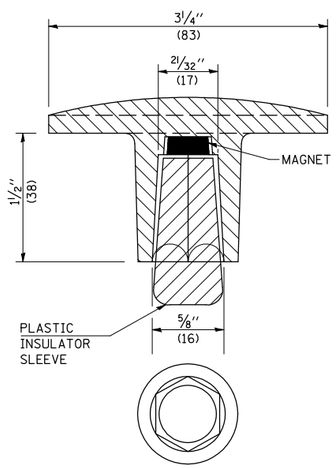

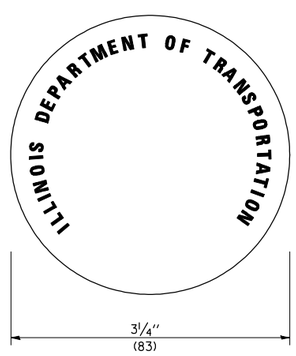

THE DIMENSIONS SHOWN SHALL BE EXACT, OTHERS MAY VARY, BUT SHALL BE SHOWN ON SHOP DRAWINGS.

GENERAL NOTES

1. THE CONTRACT UNIT PRICE, EACH, FOR SURVEY MARKER, TYPE I, (SPECIAL) SHALL BE PAYMENT IN FULL FOR FURNISHING THE SURVEY MARKER.
2. ALL SURVEY MARKERS, TYPE I, (SPECIAL) SHALL BE PLACED ± 1/4" (6 mm) BELOW THE FINAL SURFACE.
3. WHEN THE TABLET AND REBAR ARE PLACED AS PART OF A SURVEY MARKER VAULT, THEY SHALL BE CONSIDERED AS INCLUDED IN THAT PAY ITEM AND THERE WILL BE NO PAYMENT FOR THE SURVEY MARKER, TYPE I, (SPECIAL).

SPECIFICATIONS FOR ALUMINUM TABLET

SURVEY CAP FOR REBAR. 3 1/4" (83 mm) CONVEX SURVEY CAP FOR 5/8" (15 mm) REBAR WITH ILLINOIS DEPARTMENT OF TRANSPORTATION LOGO. THIS LOGO SHALL PROVIDE LETTERS RECESSED INTO THE SURFACE A MINIMUM OF 1/32" (0.8 mm) FOR EASY AND LONG-TERM LEGIBILITY. THE ALUMINUM CAP FOR REBAR SHALL BE PRODUCED BY THE PROCESS OF ORBITAL FORGING TO PRODUCE A HIGH-STRENGTH AND DURABLE MARKER CAP WHICH WILL NOT CHIP OR BREAK AND PROVIDE A SMOOTH FINISH FOR STAMPING OF DATA IN THE FIELD. THE ALUMINUM CAP FOR REBAR SHALL BE TAPERED FOR A PERFECT COMPRESSION FIT. A SPECIAL PLASTIC INSULATOR SHALL BE INSTALLED TO PREVENT DISSIMILAR METAL CONTACT AND CORROSION. THE PLASTIC INSULATOR SHALL FORM READILY TO THE OUTER SHAPE OF THE REBAR AND TO THE INNER SHAPE OF THE ALUMINUM CAP SOCKET. THE PLASTIC INSULATOR SHALL BE LOW DENSITY POLYETHYLENE, A MINIMUM 1 1/2" (38 mm) LONG AND CONFORM TO FEDERAL SPECIFICATION L-P 390.

COMPOSITION: ALUMINUM 98.3-98.7%; OTHER 1.3-1.7%; STRENGTH: YIELD 28 KSI (193 MPa), ULTIMATE 32 KSI (221 MPa). ELONGATION 15% [IN 2" (50 mm)]. SPECIFICATIONS: ALUMINUM ALLOY 6101-0; ASTM B317-83 (EXCEPT TEMPER) AS FORGED. NO EXCEPTIONS.

SPECIFICATIONS FOR REBAR

REBAR FOR ALUMINUM TABLET. REINFORCEMENT BAR SHALL BE 5/8" (#15) X 48" (1.2 m) (DEFORMED).

INSPECTION OF REINFORCEMENT BAR 5/8" (#15) SHALL BE DONE BY DISTRICT PERSONNEL OF THE ILLINOIS DEPARTMENT OF TRANSPORTATION, DIVISION OF HIGHWAYS.

XZ193400 – SURVEY MARKER, TYPE 2 (SPECIAL)

TO BE INSTALLED IN RIGID OR COMPOSITE PAVEMENT FOR PRESERVING PERMANENT SURVEY MARKERS (PI'S, PT'S, PC'S, POC'S, & POT'S)

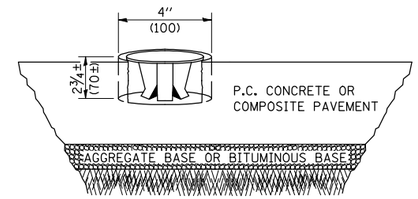

SPECIFICATIONS FOR ALUMINUM TABLET (FORKED)

ALUMINUM TABLET (FORKED) FOR USE WITH "SURVEY MARKER, TYPE 2, (SPECIAL)" SHALL BE AS SHOWN ON THE DETAIL FOR THE 3 1/4" (83 mm) CONVEX SURVEY TABLET WITH ILLINOIS DEPARTMENT OF TRANSPORTATION LOGO. THIS LOGO SHALL PROVIDE FOR LETTERS RECESSED INTO THE SURFACE A MINIMUM OF 1/32" (0.8 mm) FOR EASY AND LONG-TERM LEGIBILITY. THE ALUMINUM TABLET SHALL BE PRODUCED BY THE PROCESS OF ORBITAL FORGING TO PRODUCE A HIGH-STRENGTH AND DURABLE MARKER CAP WHICH WILL NOT CHIP OR BREAK AND PROVIDE A SMOOTH FINISH FOR STAMPING OF DATA IN THE FIELD. THE ALUMINUM TABLET SHALL BE DESIGNED NOT TO TURN OR ROTATE. THREE PRONGS ON A 2 1/2" (63 mm) STEM SHALL BE SUCH THAT THE ALUMINUM TABLET CANNOT BE EASILY REMOVED.

COMPOSITION: ALUMINUM 92-93%; MAGNESIUM 6.5-7.5%. STRENGTH: YIELD 19,000-21,000 PSI (131-145 MPa); TENSILE 38,000-44,000 PSI (262-303 MPa); ELONGATION 10-15% [IN 2" (50 mm)]. SPECIFICATIONS: ALLOY 535.0; QQ-A-601ES. NO EXCEPTIONS.

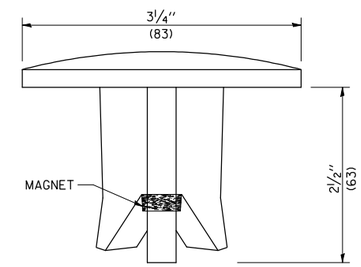

SIDE VIEW

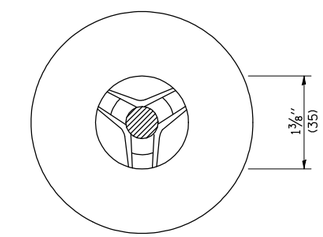

BOTTOM VIEW

THE DIMENSIONS SHOWN SHALL BE EXACT, OTHERS MAY VARY, BUT SHALL BE SHOWN ON SHOP DRAWINGS.

GENERAL NOTES

1. WORK ON THIS ITEM SHALL NOT START UNTIL THE FINAL SURFACE IS COMPLETED.
2. THE ALUMINUM TABLET (FORKED) SHALL REST UPON THE BOTTOM OF THE 4" (100 mm) CORE HOLE. IF THE HOLE IS TOO DEEP, EPOXY GROUT MUST BE USED TO DECREASE THE DEPTH AND ALLOWED TO HARDEN BEFORE PROCEEDING.
3. THE ALUMINUM TABLET SHALL BE ANCHORED IN THE 4" (100 mm) DIAMETER HOLE IN THE NEW PAVEMENT WITH TWO-COMPONENT EPOXY CONFORMING TO APPLICABLE PORTIONS OF ARTICLE 1025.01 OF THE STANDARD SPECIFICATIONS.
4. THE 4" (100 mm) CORE HOLE SHALL BE SUBJECT TO THE APPROVAL OF THE ENGINEER.
5. THE CONTRACT PRICE, EACH, FOR SURVEY MARKER, TYPE 2 (SPECIAL) SHALL BE PAYMENT IN FULL FOR FURNISHING THE ALUMINUM TABLET AND ALL LABOR AND MATERIAL TO SET THE MARKER IN PLACE, AS SPECIFIED, INCLUDING CORING THE NEW PAVEMENT.
6. ALL SURVEY MARKERS, TYPE 2 (SPECIAL) SHALL BE PLACED ± 1/4" (6 mm) BELOW THE FINAL SURFACE.

Note: All dimensions are in INCHES (millimeters) unless otherwise shown.

DATE	REVISIONS	NAME
11/06	REPLACED DETAIL D-1.05	TJB

ILLINOIS DEPARTMENT OF TRANSPORTATION

SURVEY MARKERS
TYPE 1 & 2 (SPECIAL)

DISTRICT 5 DETAIL NO. XZ193AAA

DESIGNER NOTE: BDE 58-8.02 "PLACE MARKERS AT THE PT'S AND PC'S OF ALL HORIZONTAL CURVES AND SPACE THEM ALONG TANGENTS SO THAT TWO MARKERS ARE ALWAYS INTERVISIBLE."

PLOT DATE = 8/12/2009
FILE NAME = c:\pw_work\PWIDOT\CEARLDCKJD\d818144SV70623-sht-details.dgn
PLOT SCALE = 42.3529 ' / IN.
USER NAME = cearlock,jd