CONTRACT NO. 70623

F.A.P. RTE.	SECTION	COUNTY	TOTAL SHEETS	SHEET NO.
808	*	**	715	242
STA.		TO STA.		
FED. ROAD DIST. NO.	ILLINOIS	FED. AID PROJECT		

* (205,57,105)RS-2
** CHAMPAIGN & DOUGLAS

DETAIL OF POROUS GRANULAR EMBANKMENT PAY LIMITS

CULVERT NO. 5, STATION 2025+00.00

S.N. 010-8144

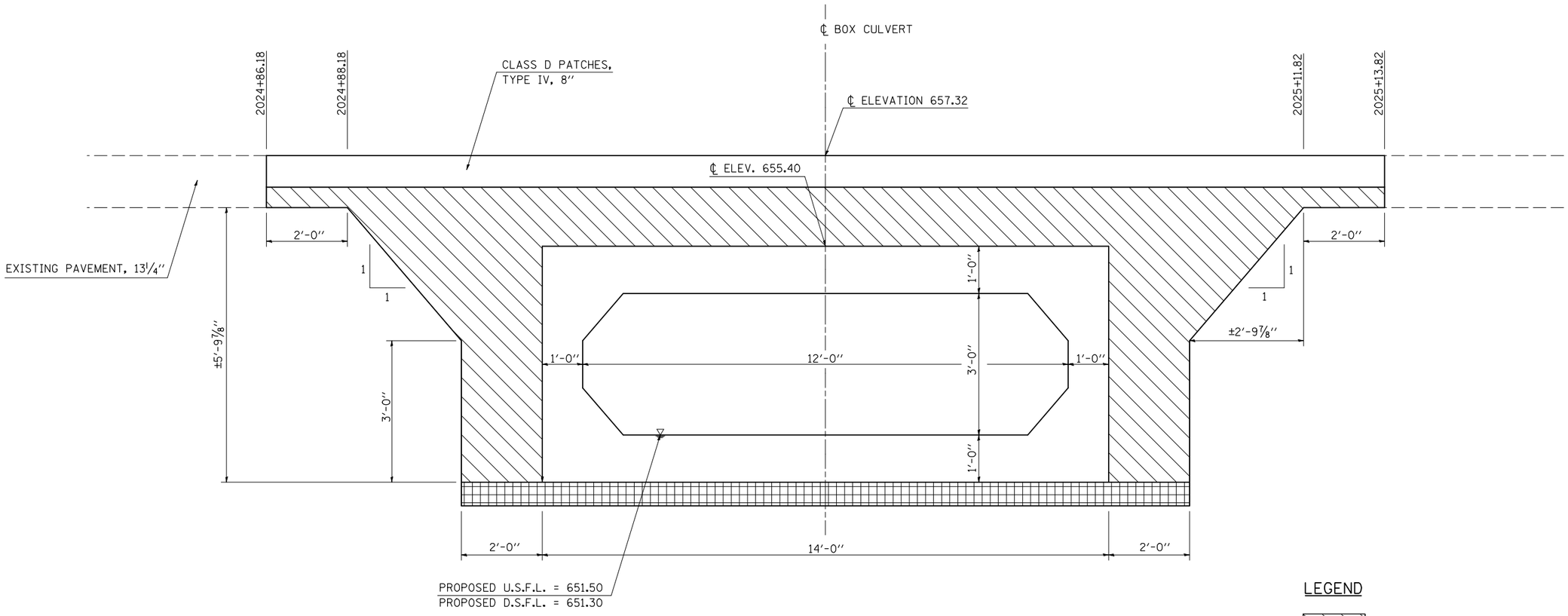

LEGEND

PAY LIMITS OF POROUS GRANULAR EMBANKMENT - CA-6

POROUS GRANULAR MATERIAL - CA-7 (6")
INCLUDED IN PAY ITEM FOR BOX CULVERT

DRAWING NOT TO SCALE

GENERAL NOTES

1) WORK SHOWN IN THE DETAIL SHALL BE PERFORMED IN ACCORDANCE WITH APPLICABLE PORTIONS OF SECTION 207 AND SECTION 540 OF THE STANDARD SPECIFICATIONS.

2) POROUS GRANULAR EMBANKMENT SHALL EXTEND 2 FT. BEYOND THE AGGREGATE SHOULDER.

3) THIS WORK SHALL BE PAID FOR AT THE CONTRACT UNIT PRICE PER CUBIC YARD FOR POROUS GRANULAR EMBANKMENT.

4) THE AREA TO BE EXCAVATED FOR THE PROPOSED BOX CULVERT SHALL BE MEASURED AND PAID FOR AT THE CONTRACT UNIT PRICE PER CUBIC YARD FOR STRUCTURE EXCAVATION. THE QUANTITY CALCULATED WILL BE THE AREA FOR THE PROPOSED STRUCTURE LESS THE AREA REQUIRED TO REMOVE THE EXISTING STRUCTURE. THE EXISTING STRUCTURE AREA IS CONSIDERED TO BE THE AREA CONTAINED BETWEEN THE BOTTOM OF THE PAVEMENT TO THE BOTTOM OF THE STRUCTURE TIMES THE OUTSIDE DIAMETER OF THE STRUCTURE.

ILLINOIS DEPARTMENT OF TRANSPORTATION

DETAIL OF POROUS GRANULAR EMBANKMENT
PAY LIMITS, STA. 2025+00.00
CULVERT NO. 5

SCALE: N/A
DATE: 07/16/09

DRAWN BY: B.B.P.
CHECKED BY: G.A.E.

PLOT DATE = 8/19/2009
FILE NAME = c:\pw_work\PWIDOT\CEARLOCKJD\d0100445\70623-sht-details.dgn
PLOT SCALE = 42.3529 ' / IN.
USER NAME = cearlockjd