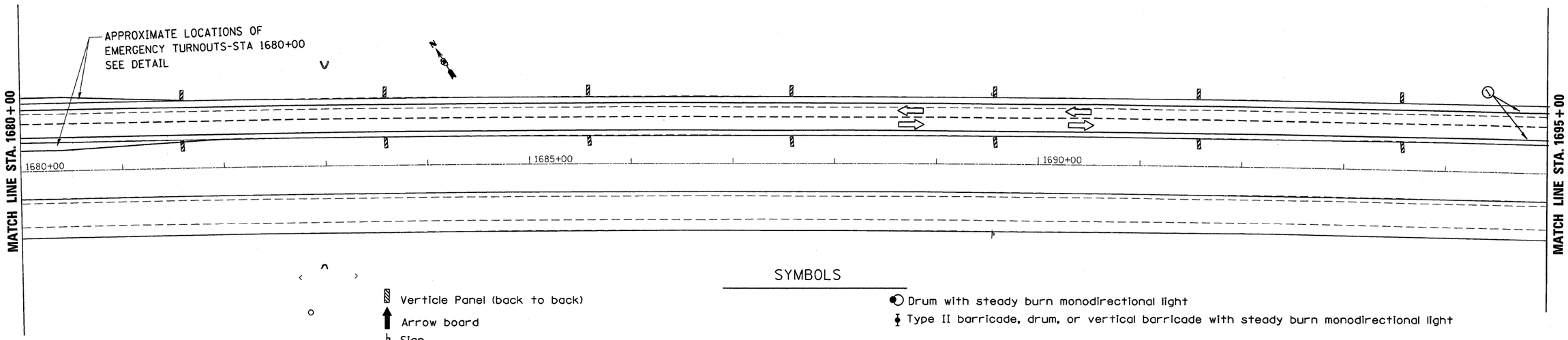

SYMBOLS

- Verticle Panel (back to back)
- Arrow board
- Sign
- Direction indicator barricade with steady burn monodirectional light
- Drum with steady burn monodirectional light
- Type II barricade, drum, or vertical barricade with steady burn monodirectional light
- (1) Wet temporary pavement marking tape - TY III shall be placed throughout the taper and along-side the work area. The edge lines shall be white and the line near the barrier shall be yellow.

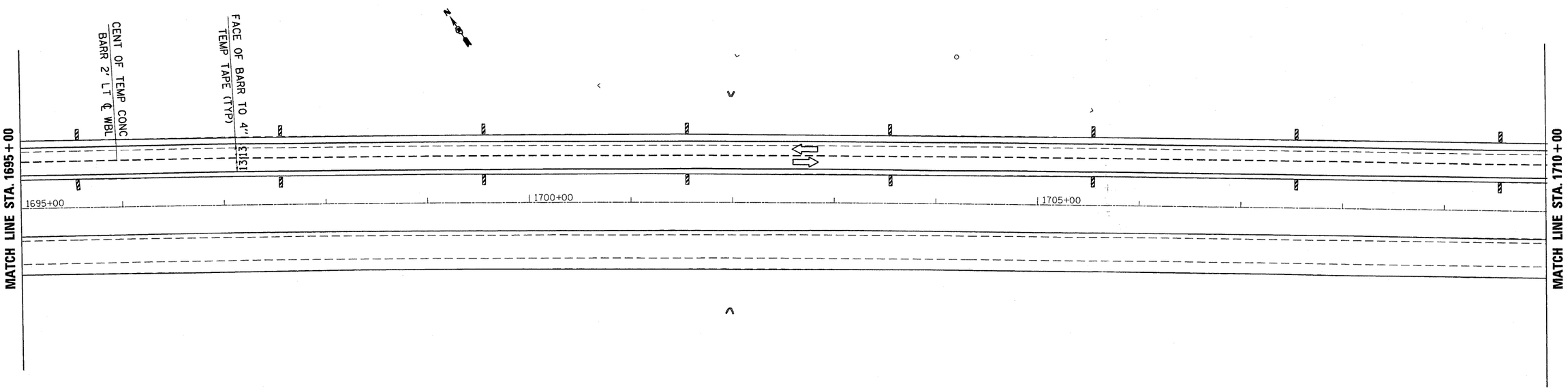

**06-[7BR&BR-1,7VB-M,6BR&6,7 RS-1 & I]

FILE NAME = c:\pw_work\PWIDOT\BRABOYPC\d0112640\d365908-sht-staging.dgn	USER NAME = braboypc	DESIGNED -	REVISED -
		DRAWN -	REVISED -
	PLOT SCALE = 50.0000 ' / IN.	CHECKED -	REVISED -
	PLOT DATE = Sep 07, 2009 - 01:05:39 PM	DATE -	REVISED -

STATE OF ILLINOIS
DEPARTMENT OF TRANSPORTATION

STAGE II CONSTRUCTION

SCALE: | SHEET NO. OF SHEETS | STA. TO STA.

F.A. RTE.	SECTION	COUNTY	TOTAL SHEETS	SHEET NO.
I-80	**	BUREAU	344	86
		CONTRACT NO. 66908		
		ILLINOIS FED. AID PROJECT		