STATE OF ILLINOIS
DEPARTMENT OF TRANSPORTATION

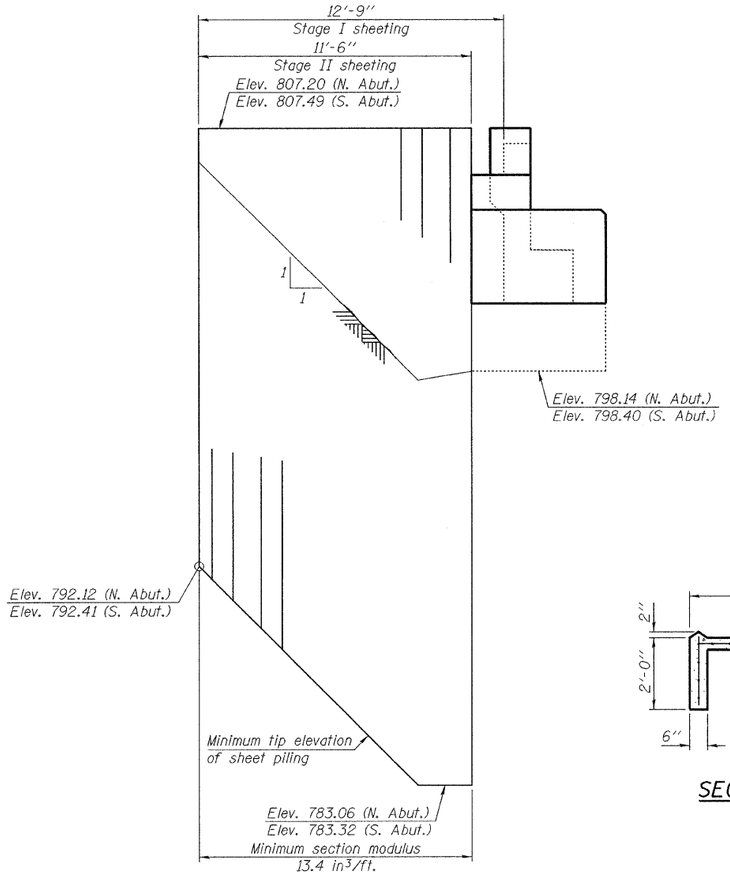

TEMPORARY SHEET PILING

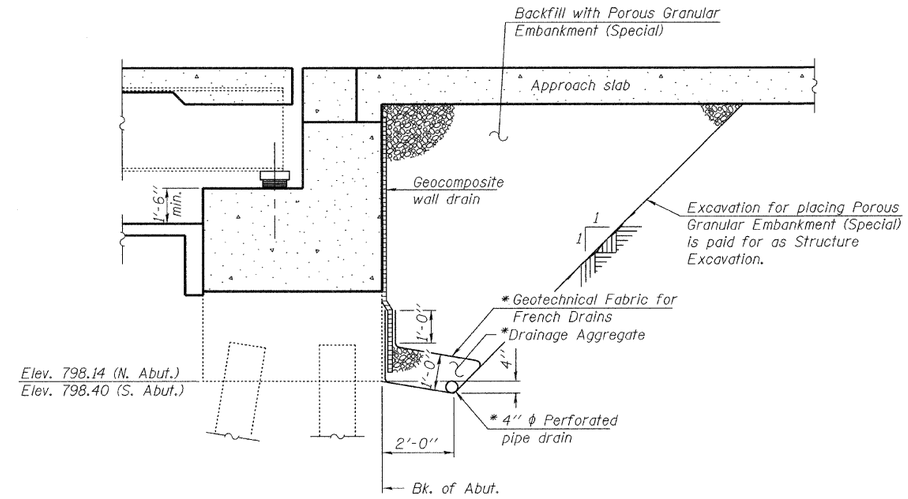

SECTION THRU ABUTMENT

(Horiz. dim @ Rt. L's)

*Included in the cost of Pipe Underdrains for Structures.

TOTAL BILL OF MATERIAL

ITEM	UNIT	SUPER	SUB	TOTAL
Porous Granular Embankment (Special)	Cu. Yd.		161	161
Concrete Removal	Cu. Yd.		40	40
Slope Wall Removal	Sq. Yd.		600	600
Removal of Existing Concrete Deck	Each	1		1
Protective Shield	Sq. Yd.	235		235
Structure Excavation	Cu. Yd.		186	186
Floor Drains	Each	12		12
Concrete Structures	Cu. Yd.		91.5	91.5
Concrete Superstructure	Cu. Yd.	330.9		330.9
Bridge Deck Grooving	Sq. Yd.	871		871
Protective Coat	Sq. Yd.	1060		1060
Furnishing and Erecting Structural Steel	Pound	4960		4960
Stud Shear Connectors	Each	3131		3131
Cleaning and Painting Steel Bridge	L. Sum	1		1
Containment and Disposal of Lead Paint Cleaning Residues	L. Sum	1		1
Reinforcement Bars, Epoxy Coated	Pound	78230	6020	84250
Bar Splicers	Each	625	124	749
Slope Wall 4 Inch	Sq. Yd.		613	613
Temporary Sheet Piling	Sq. Ft.		486	486
Name Plates	Each	1		1
Preformed Joint Strip Seal	Foot	88.5		88.5
Elastomeric Bearing Assembly, Type I	Each		14	14
Anchor Bolts, 1"	Each		28	28
Concrete Sealer	Sq. Ft.		410	410
Geocomposite Wall Drain	Sq. Yd.		74	74
Pipe Underdrains for Structures, 4"	Foot		164	164
Jacking and Cribbing	Each		14	14

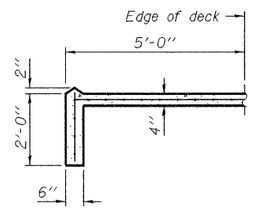

SECTION A-A

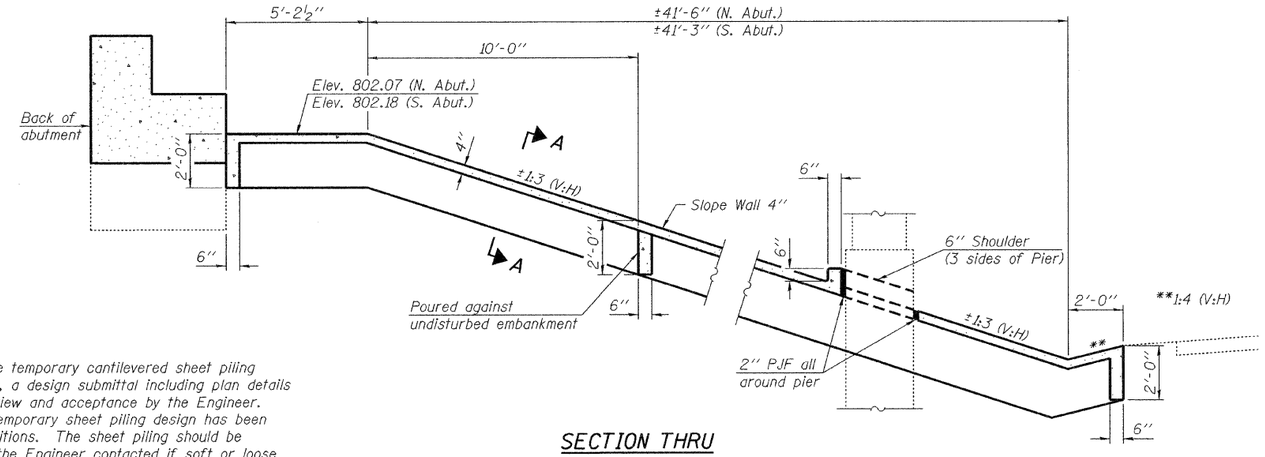

SECTION THRU CONCRETE SLOPEWALL

(Horiz. dim @ Rt. L's)

Notes

If the Contractor chooses to alter the temporary cantilevered sheet piling design requirements shown on the plans, a design submittal including plan details and calculations will be required for review and acceptance by the Engineer.

Due to the lack of boring data, the temporary sheet piling design has been developed to account for most soil conditions. The sheet piling should be monitored for excessive deflection and the Engineer contacted if soft or loose soils are encountered.

The Contractor shall connect the first sheet to the existing abutment wall to ensure stability of sheets driven to the top of the existing footing. This connection shall be reviewed and accepted by the Engineer and included in the cost for Temporary Sheet Piling.

All drainage system components shall extend parallel to the abutment back wall until they intersect the wingwalls. The pipe shall extend under the wingwall, if necessary, until intersecting the side slopes. The pipes shall drain into concrete headwalls. (See Article 601.05 of the Standard Specifications and Highway Standard 601101).

Slopewall shall be reinforced with welded wire fabric, 6" x 6" - W4.0 x W4.0, weighing 58 lbs. per 100 sq. ft.

DESIGNED	Nicholas R. Barnett
CHECKED	Michael D. Rolape
DRAWN	Michael B. Mossman
CHECKED	N.R.B./M.D.R./G.R.A.

September 29, 2009

EXAMINED Thomas J. Domagalski
ENGINEER OF BRIDGE DESIGN

PASSED Ralph E. Anderson
ENGINEER OF BRIDGES AND STRUCTURES

GENERAL DETAILS
STRUCTURE NO. 037-0017 (S.B.)

SHEET NO. 2	F.A.I. RTE.	SECTION	COUNTY	TOTAL SHEETS	SHEET NO.
27 SHEETS	74	37-4HB-1	HENRY	148	68
			CONTRACT NO. 64264		
		ILLINOIS	FED. AID PROJECT		

0376017-64264.dgn 09/29/2009 9:10:38 AM