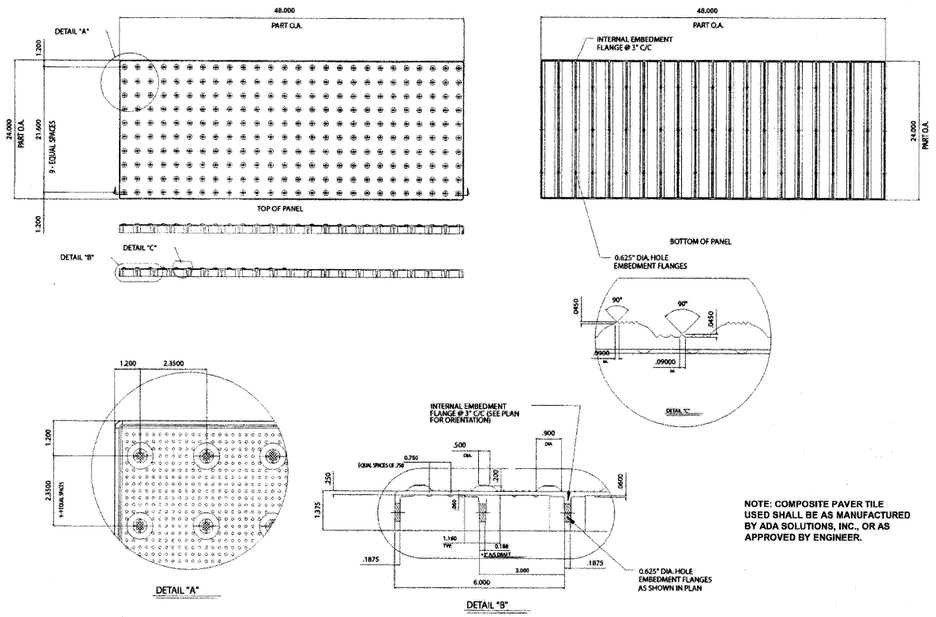

NOTE: COMPOSITE PAVER TILE USED SHALL BE AS MANUFACTURED BY ADA SOLUTIONS, INC., OR AS APPROVED BY ENGINEER.

CAST-IN-PLACE COMPOSITE PAVER TILE FOR DETECTABLE WARNING

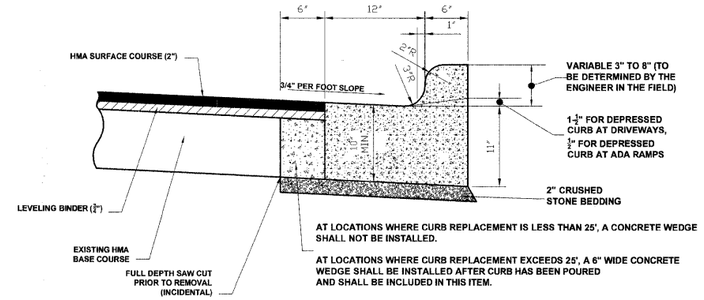

COMBINATION CONCRETE CURB & GUTTER TYPE B-6.12 (MODIFIED)

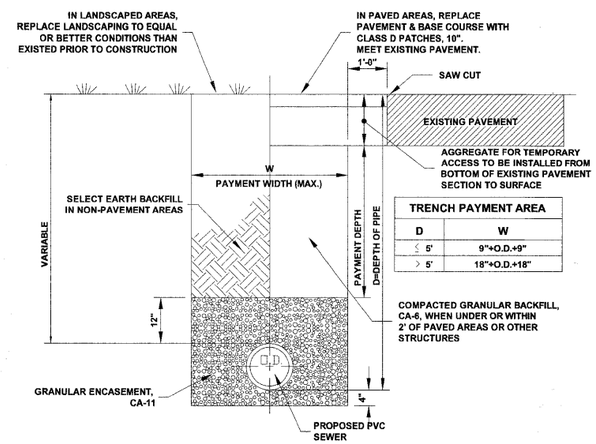

TRENCH PAYMENT AREA	
D	W
≤ 5'	9"+O.D.+9"
> 5'	18"+O.D.+18"

TYPICAL PVC SEWER TRENCH DETAIL

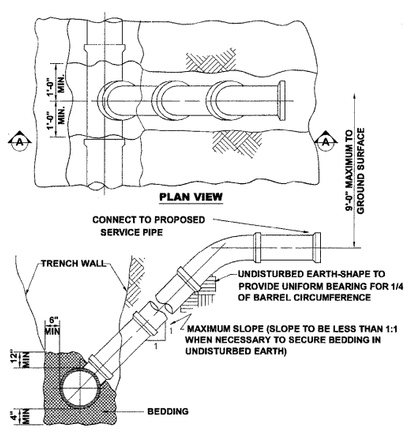

TYPICAL RISER FOR SERVICE LATERAL

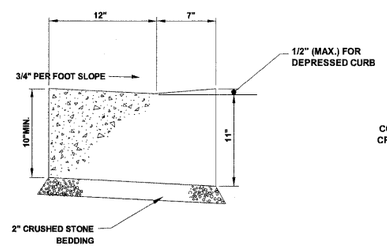

CURB AND GUTTER AT A.D.A. RAMPS

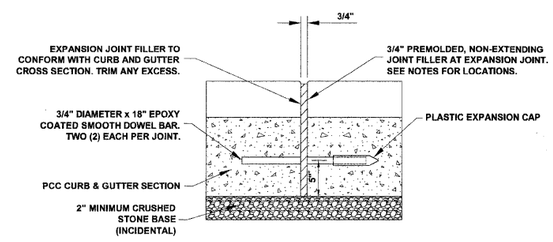

NOTE:

1. EXPANSION JOINTS ARE TO BE CONSTRUCTED AT ALL PC'S & PT'S OF INTERSECTION RETURNS AND ALL OTHER SHORT RADIUS SECTIONS, CONSTRUCTION JOINTS, EVERY 50' ON TANGENT SECTIONS, AND AS DIRECTED BY THE ENGINEER.

TYPICAL CURB AND GUTTER EXPANSION JOINT

M.W.R.D.G.C. GENERAL NOTES

1. THE MWRD SEWER SYSTEMS SECTION FIELD OFFICE MUST BE NOTIFIED AT LEAST TWO (2) WORKING DAYS PRIOR TO THE COMMENCEMENT OF WORK AT (708) 588-4055.
2. ELEVATION DATUM IS U.S.G.S.
3. ALL FLOOR DRAINS SHALL DISCAHARGE TO THE SANITARY SEWER SYSTEM.
4. ALL DOWNSPOUTS AND FOOTING DRAINS SHALL DISCHARGE INTO THE STORM SEWER SYSTEM.
5. ALL PVC SEWER PIPE SHALL BE SDR 26. ALL PVC SEWER PIPE JOINTS SHALL CONFORM TO ASTM D-3139 FOR PVC PIPE 12" IN DIAMETER OR LESS. ALL PVC SEWER PIPE JOINTS SHALL CONFORM TO ASTM D-3212 FOR PVC PIPE 15" IN DIAMETER OR MORE. ALL PVC SEWER PIPE 12" IN DIAMETER OR LESS SHALL CONFORM TO ASTM D-2241 (WATER QUALITY PIPE). ALL PVC SEWER PIPE 15" IN DIAMETER OR MORE SHALL CONFORM TO ASTM D-3034.
6. ALL D.I.P. STORM, COMBINED AND SANITARY SEWER PIPE JOINTS SHALL CONFORM TO ANSI A-21.11. ALL D.I.P. SEWER PIPE SHALL CONFORM TO ASTM A-21.51. ALL D.I.P. SEWER PIPE SHALL BE CLASS 52.
7. ALL SANITARY, COMBINED, AND STORM SEWER CONSTRUCTION IN COMBINED SEWER AREAS, REQUIRES STONE BEDDING 1/4" TO 1" IN SIZE, WITH A MINIMUM THICKNESS EQUAL TO 1/4 THE OUTSIDE DIAMETER OF THE SEWER PIPE, BUT NOT LESS THAN FOUR INCHES (4") NOR MORE THAN EIGHT INCHES (8"). MATERIAL SHALL BE CA-11 OR CA-13 AND SHALL BE EXTENDED AT LEAST 12" ABOVE THE TOP OF THE PIPE.
8. "BAND SEAL" OR SIMILAR FLEXIBLE-TYPE COUPLINGS SHALL BE USED IN THE CONNECTION OF SEWER PIPE OF DISSIMILAR MATERIALS.
9. WHEN CONNECTING TO AN EXISTING SEWER MAIN BY MEANS OTHER THAN AN EXISTING WYE, TEE, OR AN EXISTING MANHOLE, ONE OF THE FOLLOWING METHODS SHALL BE USED:
   a) CIRCULAR SAW-CUT OF SEWER MAIN BY MECHANICAL CORING MACHINE, AND PROPER INSTALLATION OF HUB-WYE SADDLE OR HUB-TEE SADDLE, IN ACCORDANCE WITH THE MANUFACTURER'S RECOMMENDATIONS.
   b) REMOVE AN ENTIRE SECTION OF PIPE (BREAKING ONLY THE TOP OF ONE BELL) AND REPLACE WITH A WYE OR TEE BRANCH SECTION. AFTER THE WYE OR TEE BRANCH IS INSERTED, CONCRETE SHALL BE PLACED OVER THE BROKEN AREA TO A MINIMUM THICKNESS OF 4" AND TO A DIMENSION OF 8" IN ALL DIRECTIONS.
   c) USING PIPE CUTTER, NEATLY AND ACCURATELY CUT OUT DESIRED LENGTH OF PIPE FOR INSERTION OF PROPER FITTING. USE "BAND SEAL" OR SIMILAR COUPLINGS TO HOLD FIRMLY IN PLACE. FOLLOW MANUFACTURER'S RECOMMENDATIONS FOR THE INSTALLATION.
10. WHEREVER A SEWER CROSSES UNDER A WATER MAIN, THE MINIMUM VERTICAL DISTANCE FROM THE TOP OF THE SEWER TO THE BOTTOM OF THE WATER MAIN SHALL BE 18 INCHES. FURTHERMORE, A MINIMUM HORIZONTAL DISTANCE OF 10 FEET BETWEEN SANITARY/COMBINED SEWERS AND WATER MAINS SHALL BE MAINTAINED UNLESS: THE SEWER IS LAID IN A SEPARATE TRENCH, KEEPING A MINIMUM 18" VERTICAL SEPARATION; OR THE SEWER IS LAID IN THE SAME TRENCH WITH THE WATER MAIN LOCATED AT THE OPPOSITE SIDE ON A BENCH OF UNDISTURBED EARTH, KEEPING A MINIMUM 18" VERTICAL SEPARATION. IF EITHER THE VERTICAL OR HORIZONTAL DISTANCES DESCRIBED ABOVE CANNOT BE MAINTAINED, OR THE SEWER CROSSES ABOVE THE WATER MAIN, THE SEWER SHALL BE CONSTRUCTED TO WATER MAIN STANDARDS.
11. ALL SANITARY MANHOLES, (AND STORM MANHOLES IN COMBINED SEWER AREAS), SHALL HAVE A MINIMUM INSIDE DIAMETER OF 48 INCHES, AND SHALL BE PRE-CAST REINFORCED CONCRETE.
12. ALL ABANDONED SEWERS SHALL BE PLUGGED AT BOTH ENDS WITH A MINIMUM OF TWO (2) FEET LONG, NON-SHRINK CONCRETE/MORTAR PLUG.
13. ALL INLET AND OUTLET PIPES OF SANITARY SEWER MANHOLES AND OTHER UNDERGROUND STRUCTURES (AND IN COMBINED SEWER AREAS, ALSO ALL COMBINED/STORM SEWER MANHOLES, CATCH BASINS, INLETS, AND UNDERGROUND DETENTION STORAGE STRUCTURES) SHALL BE JOINED WITH WATERTIGHT FLEXIBLE RUBBER CONNECTORS CONFORMING TO A.S.T.M. C-443 & C-923 WITH STAINLESS STEEL BANDS.
14. THE MAXIMUM ALLOWABLE INFILTRATION OR EXFILTRATION IS 100 GAL/DAY/MILE/INCH DIA OF THE SEWER PIPE.

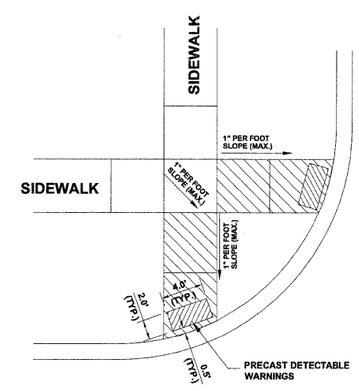

A.D.A. RAMP DETAIL

Drawing file: W:\Projects\1250095 - Prairie Ave IAPP\DETAILS.dwg Aug 17, 2009 - 9:41am

HANCOCK ENGINEERING
◆ Civil Engineers
◆ Municipal Consultants
◆ Established 1911
9933 Roosevelt Road
Westchester, Illinois 60154-2786
Phone: 708/865-0200
Fax: 708/865-1212

USER NAME	DESIGNED	WOP	REVISED
	DRAWN	LEV/MK	
PLOT SCALE NONE	CHECKED	JG	
PLOT DATE	DATE	8-17-09	

STATE OF ILLINOIS
DEPARTMENT OF TRANSPORTATION

DETAILS AND NOTES

SCALE: NONE | SHEET NO. OF SHEETS | STA. TO STA.

F.A.U. RTE.	SECTION	COUNTY	TOTAL SHEETS	SHEET NO.
2732	09-00124-00-RS	COOK	22	7

CONTRACT NO. 63296

FED. ROAD DIST. NO. 1 ILLINOIS FED. AID PROJECT ARA-9003 (302)

E.H.E. PROJECT NO. 125-09-09501