STATE OF ILLINOIS
DEPARTMENT OF TRANSPORTATION

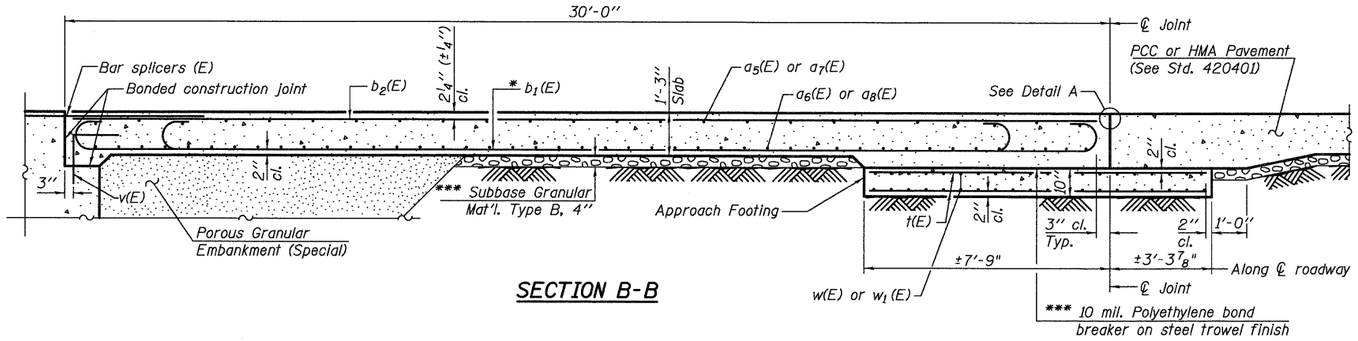


SECTION B-B

* Tilt #9 $b_1$(E) bars as required to maintain clearance.

*** Cost included with Concrete Superstructure.

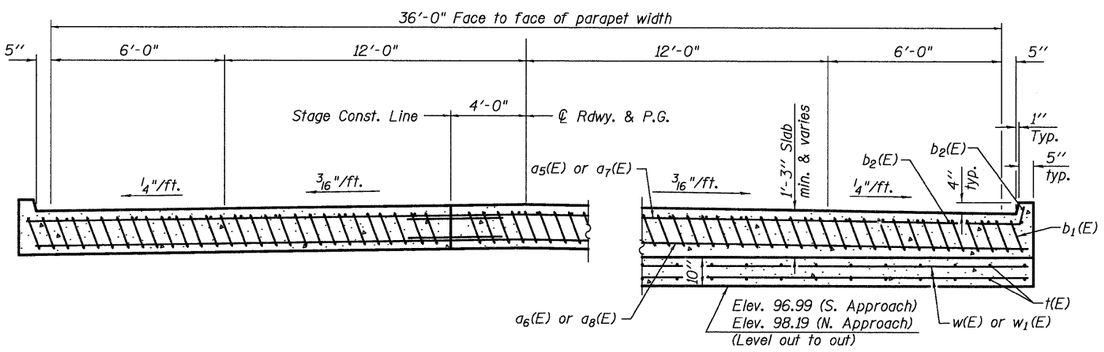


NEAR ABUTMENT

AT APPROACH FOOTING

SECTION C-C

(See Plan for dimensions not shown)

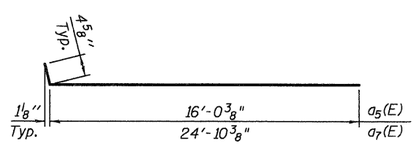


BAR $a_5$(E) or $a_7$(E)

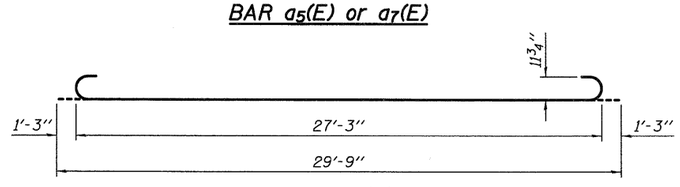


BAR $b_1$(E)

Notes:
- See sheet 12 of 17 for Detail A.
- Approach slab shall be paid for as Concrete Superstructure.
- Approach footing concrete shall be paid for as Concrete Structures.
- Reinforcement shall be paid for as Reinforcement Bars, Epoxy Coated.
- For v(E) bar details, see sheet 11 of 17.
- The approach footing maximum applied service bearing pressure (Qmax) = 2.0 ksf.
- For bar splicer details, see sheet 17 of 17.
- Cost of excavation for approach footing included with Concrete Structures.
- For Porous Granular Embankment (Special) and drainage treatment details, see sheet 2 of 17.

TWO APPROACHES
BILL OF MATERIAL

| Bar | No. | Size | Length | Shape |
|---|---|---|---|---|
| $a_5$(E) | 50 | #4 | 16'-5" | |
| $a_6$(E) | 92 | #5 | 16'-3" | |
| $a_7$(E) | 50 | #4 | 25'-3" | |
| $a_8$(E) | 92 | #5 | 25'-1" | |
| $b_1$(E) | 182 | #9 | 29'-9" | |
| $b_2$(E) | 78 | #4 | 29'-8" | |
| t(E) | 160 | #4 | 10'-9" | |
| w(E) | 80 | #5 | 16'-3" | |
| $w_1$(E) | 80 | #5 | 25'-1" | |
| Concrete Superstructure | | | Cu. Yd. | 110.3 |
| Concrete Structures | | | Cu. Yd. | 25.9 |
| Reinforcement Bars, Epoxy Coated | | | Pound | 29,910 |

BRIDGE APPROACH SLAB DETAILS
INTERSTATE 55 W. FRONTAGE ROAD
OVER I & M CANAL & STATE TRAIL
F.A.I. ROUTE 55 - SECTION 86B-3-R
WILL COUNTY
STRUCTURE NO. 099-0036
PUBLIC WATERS

| | |
|---|---|
| DESIGNED | SDS |
| CHECKED | CWC |
| DRAWN | DLH |
| CHECKED | SDS/CEH |

WHKS & CO. ENGINEERING
7018 KINGSMILL CT., SPRINGFIELD, IL
(217) 483-9457
DESIGN FIRM #184001036

| SHEET NO. 13 | F.A.I. RTE. | SECTION | COUNTY | TOTAL SHEETS | SHEET NO. |
|---|---|---|---|---|---|
| 17 SHEETS | 55 | 86B-3-R | WILL | 38 | 26 |
| | S.N. 099-0036 | | CONTRACT NO. 60F53 | | |
| | FED. ROAD DIST. NO. | ILLINOIS | FED. AID PROJECT | | |

D-91-097-09

Operator: dheberling
Date: 9/9/2009 3:16:35 PM
Filename: L:\Jobs\LONCO\7028.2\CADD\CADD Drawings\0990346-60F53.dgn