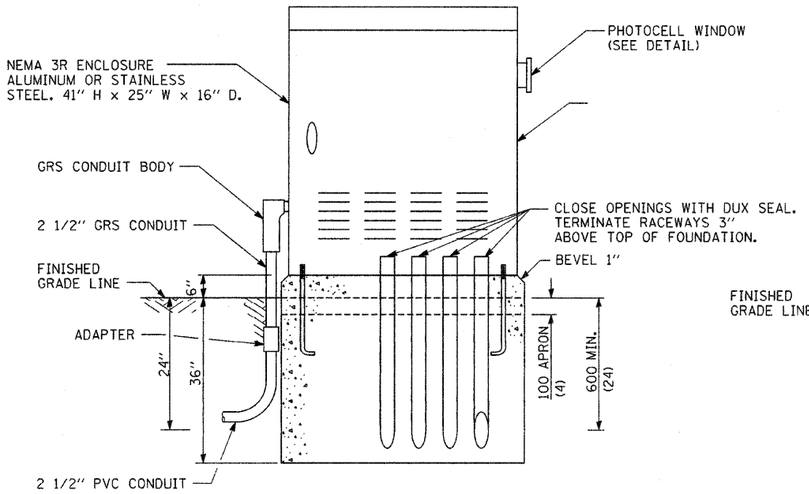


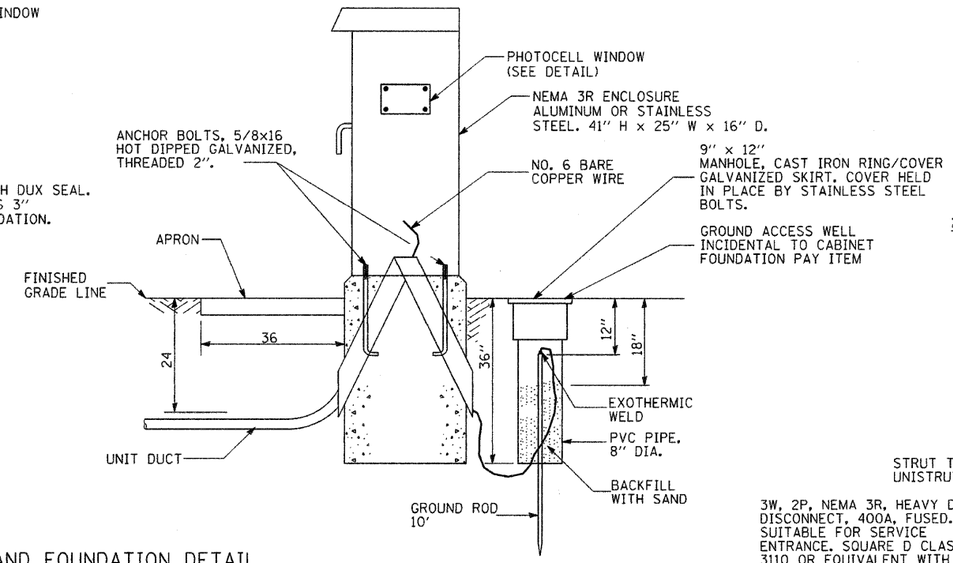


CONTROL CABINET AND FOUNDATION DETAIL
(TYPE D)

NOT TO SCALE

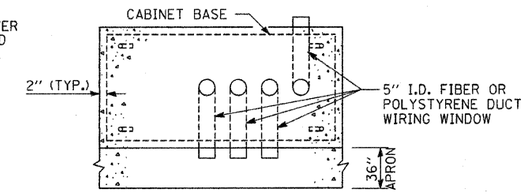


CONTROL CABINET FOUNDATION
TOP VIEW

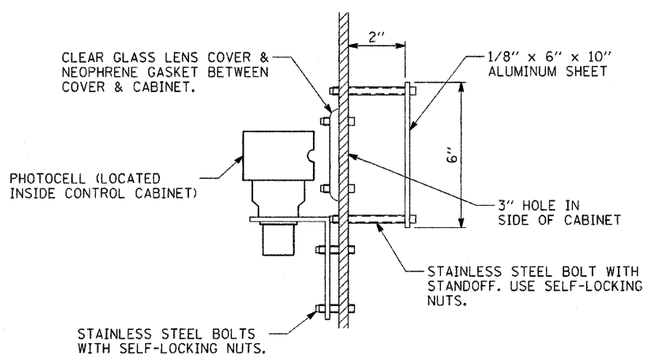


PHOTOCELL DETAIL

NOT TO SCALE

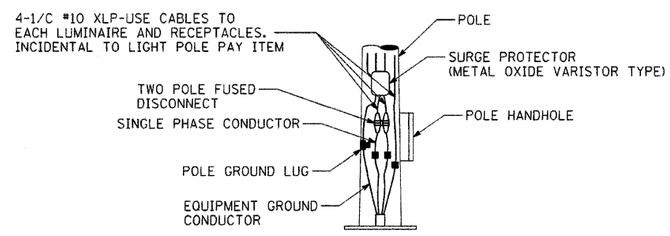


POLE BASE WIRING

NOT TO SCALE

NOTE:
ACCESSORIES AND POLE WIRING ARE TO BE INCIDENTAL TO COST OF THE LIGHT POLE PAY ITEM.

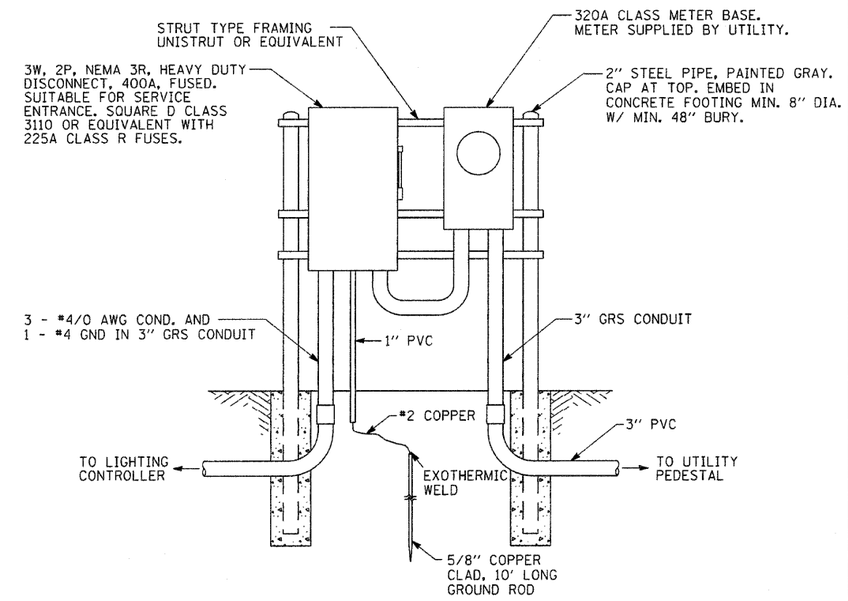


ELECTRIC UTILITY SERVICE

NOT TO SCALE

STATE OF ILLINOIS
THOMAS MEMMINGER
062-053744
SPRINGFIELD
LICENSED PROFESSIONAL ENGINEER

EXPIRES: 11/30/2011

THOMAS MEMMINGER
ELECTRICAL ENGINEER

8/11/2010
DATE

NOTE: ALL DIMENSIONS ON THIS DRAWING ARE IN INCHES UNLESS OTHERWISE INDICATED.

| | | | | | | | | | | |
|---|---|---|---|---|---|---|---|---|---|---|
| FILE NAME = $FILEA$ | USER NAME = $USER$ | DESIGNED - TM | REVISED - | STATE OF ILLINOIS DEPARTMENT OF TRANSPORTATION | MISCELLANEOUS ELECTRICAL DETAILS A | F.A. RTE. | SECTION | COUNTY | TOTAL SHEETS | SHEET NO. |
| | | DRAWN - RAH | REVISED - | | | N/A | 05-00017-00-FP | SCHUYLER | 49 | 30 |
| | PLOT SCALE = $SCALE$ | CHECKED - TM | REVISED - | | | | | CONTRACT NO. 93541 | | |
| | PLOT DATE = 8/11/2010 | DATE - | REVISED - | | SCALE: N.T.S. / SHEET NO. 30A OF 49 SHEETS / STA. TO STA. | FED. ROAD DIST. NO. | ILLINOIS | FED. AID PROJECT | | |