F.A. RTE.	SECTION	COUNTY	TOTAL SHEETS	SHEET NO.
	06-00543-00-BT	WINNEBAGO	148	142
FED. ROAD DIST. NO.		ILLINOIS	CONTRACT NO.	85521

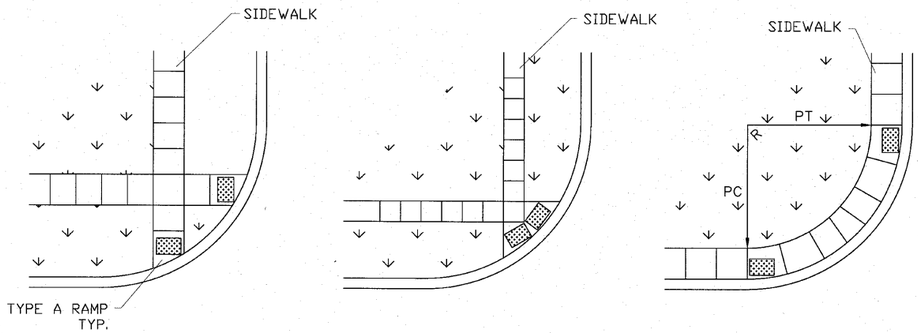

NOTE: MODIFICATION OF IDOT STD 424001-05

HATCHED AREAS OR DETECTABLE WARNINGS SHALL BE MANUFACTURED PRODUCTS SET IN THE POURED SIDEWALK. PROVIDE DETECTABLE WARNINGS MADE OF GLASS AND CARBON REINFORCED COMPOSITE, AS MANUFACTURED BY ADA SOLUTIONS, INC OF N. BILLERICA, MA OR EQUALLY APPROVED SUPPLIER. BOX OUTS WITH POURED COLORED CONCRETE WILL NOT BE ALLOWED. PHYSICAL CHARACTERISTICS: COMPRESSIVE STRENGTH 28,900 PSI (ATSM D695), FLEXURAL STRENGTH 29,300 PSI (ATSM D790), SLIP RESISTANCE 1.18 DRY/1.05 WET (ATSM C1028).

ADA CURB RAMP DETAIL FOR INTERSECTIONS

DTL-ADARAMP09.dwg

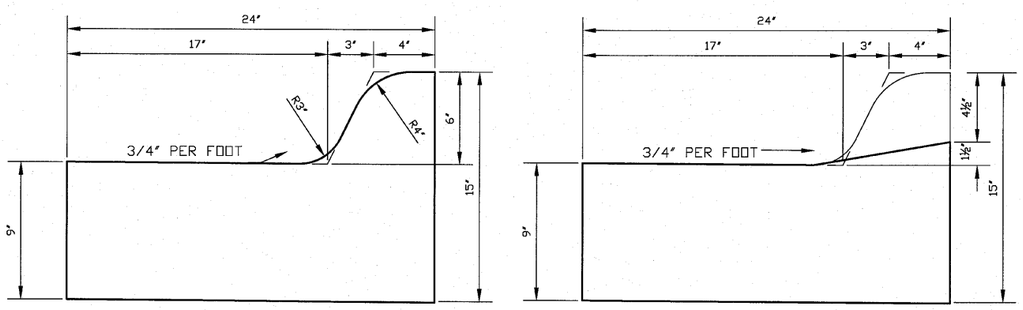

Combination Concrete
Curb & Gutter, Type M6.18
Modified

DTL-CURB M6.18

GENERAL NOTES

DEPRESSED CURBS – The top of curbs shall be depressed where the curb and gutter is constructed across alleys and for private drives or where directed by Engineer.

THICKNESS – "t" = Thickness of pavement.

DRAINAGE OPENINGS – At all location where castings are to be incorporated in the curb. and gutter, a 1" expansion joint shall be installed in the curb and gutter a distance of 5 ft. from each side of the casting. At least 2 tie bar shall be placed in the 5 ft. portion and the bars shall be at least 9" from the joint or casting. Any extra bars required shall be considered incidental. When the width of the casting is less than the width of the curb and gutter 2–No. 4 re–bar (L = 12" + casting length + 12") shall be incorporated in the continuos portion of concrete gutter in front of the casting.

TIE BARS – Tie bars shall be in accordance with details for Bulkhead Longitudinal Construction joint shown of Standard 420001–03. When curb and gutter is constructed adjacent to flexible pavement tie bar shall be omitted.

JOINTS – In addition to the requirements of Article 606.06 of the Standard Specification joints shall be constructed as follows:

Contraction joint and expansion joints shall be installed in the curb and gutter in prolongation with joints in adjacent PCC pavement or base course except that dowel bars will not be required in contraction joints. Contraction joints when sewed or template formed shall be sealed in accordance with Article 420.14(a) of the Standard Specifications.

When curb and gutter is constructed adjacent to flexible pavement, a 1" expansion joint shall be installed at points of curvature for short–radius curves and at construction joints. Contraction joints shall be placed between expansion joints at distances not to exceed 25 ft

All expansionjoints shall be constructed with a minimum 1" thick preformed expansion joint filler conforming to the cross section of the curb and gutter and shall be provided with a 1–1/4" diameter x 18" coated smooth dowel bar conforming to Article 1006.11(b) of the Standard Specifications. The greased end of the dowel bar shall be fitted with a cap having a pinched stop that will provide a minimum 1" of expansion.

Construction joints constructed in curb and gutter adjacent to PCC pavement and PCC base course shall be provided with No. 4 deformed steel tie bars 30" long. Tie bars shall be placed on 9" + centers (minimum 2 per joint).

TRANSITIONS – The transition from full height curb to depressed curb shall be made at the rate of 3" per foot of length or flatter.

ADJACENT PCC PAVEMENT – Adjacent PCC pavement or base course less than 1" in width shall be constructed monolithic with the curb and gutter. This area of pavement will be included in the measured area of the adjacent pavement.

MONOLITHIC CONSTRUCTION – Curb and combination curb and gutter may be constructed monolithically with PCC pavement at the option of the Contractor. Tie bar will not be required. Pavement reinforcement shall be extended laterally to within 3" to 5" from the back of the curb.

Curbs and combination curb and gutter may be constructed monolithically with PCC base course. Tie bar will be required. Tie bars shall be held in the proper location by support pins or approved mechanical means.

Longitudinal joints between the PCC pavement or PCC base course and curb or combination curb and gutter will not be required.

SLIPFORM CONSTRUCTION – Vertical faces may be battered at the rate of 3/4'" per foot of height to aid in slipform operations.

SHEET REVIEW	
AGENCY	DATE

REVISIONS		
NO.	ITEM	DATE

SCALE:	N/A
DRAWN BY:	MS
CHECKED BY:	JWH
DATE:	AUGUST 13, 2010

McClure Engineering Associates, Inc.
7282 Argus Drive
(815) 398-2332
Rockford, Illinois 61107-5837
FAX (815) 398-2496
Design Firm License: Illinois 184-000816

Copyright 2010 By McClure Engineering Associates, Inc.

CITY OF ROCKFORD (2)
RIVERWALK MUSEUM CAMPUS
711 NORTH MAIN STREET — ROCKFORD, IL
FILE: H:\08-008 RIVERWALK MUSEUM\DESIGN\DRAWINGS\08-008 ROCKFORD DETAILS.DWG — JOB: 04-28-10-008

H:\08-008 RIVERWALK MUSEUM\DESIGN\DRAWINGS\08-008 ROCKFORD DETAILS.DWG, CITY OF ROCKFORD (2), 9/1/2010 3:10:19 PM, I.L. MONTY