STATE OF ILLINOIS
DEPARTMENT OF TRANSPORTATION

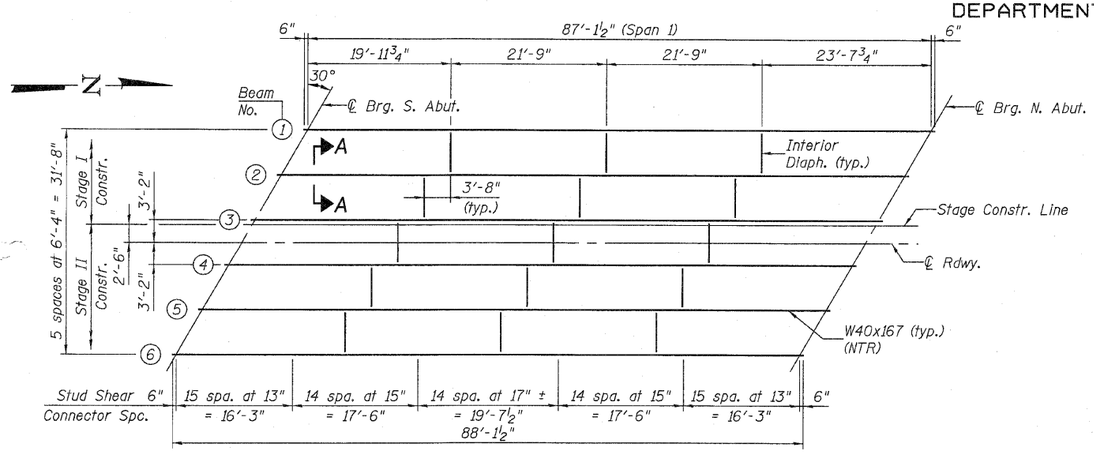

FRAMING PLAN

TOP OF BEAM ELEVATIONS*

Location	Beam 1	Beam 2	Beam 3	Beam 4	Beam 5	Beam 6
℄ Brg. S. Abut.	579.05	579.18	579.31	579.33	579.27	579.18
℄ Brg. N. Abut.	579.47	579.53	579.58	579.53	579.39	579.23

* For Fabrication only.

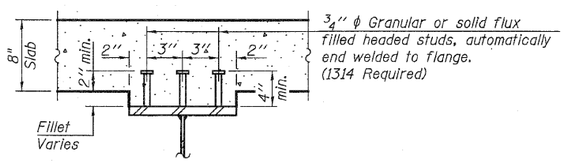

SECTION A-A

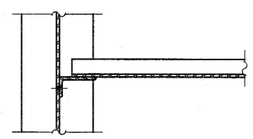

SECTION B-B

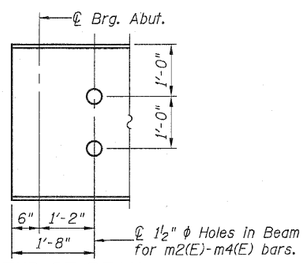

END OF BEAM AT ABUTMENTS

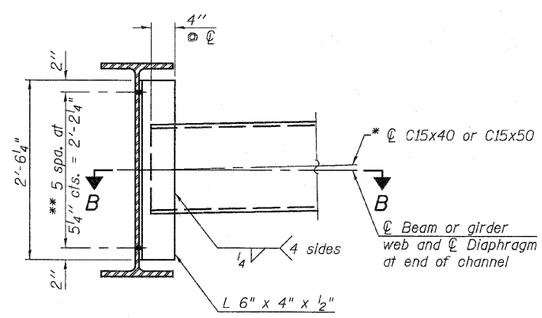

INTERIOR DIAPHRAGM

(15 Required)

Note:
Two hardened washers required for each set of oversized holes.
*Alternate channels are permitted to facilitate material acquisition. Calculated weight of structural steel is based on the lighter section. The alternate, if utilized, shall be provided at no additional cost to the Department.

**¾" ϕ HS bolts, 15/16" ϕ holes in beam web and connection angle, EXCEPT for diaphragms between beams 3 & 4 use 13/16" x 1⅞" vertical slotted holes in connection angle, and provide 3" x 3" x 5/16" ⅊ washers over slotted holes. (Also see Notes.)

INTERIOR GIRDER MOMENT TABLE			
		0.5 Span 1	
I_s	(in^4)	11600	
$I_c(n)$	(in^4)	26712	
$I_c(3n)$	(in^4)	19580	
S_s	(in^3)	600	
$S_c(n)$	(in^3)	811	
$S_c(3n)$	(in^3)	732	
Z	(in^3)	---	
DC1	(k/')	0.833	
M_{DC1}	('k)	790	
DC2	(k/')	0.150	
M_{DC2}	('k)	142	
DW	(k/')	0.267	
M_{DW}	('k)	253	
M_{LL+IM}	('k)	1272	
M_u (Strength I)	('k)	3771	
* $\phi_f M_n$, $\phi_f M_{nc}$	('k)	4132	
f_s DC1	(ksi)	15.8	
f_s DC2	(ksi)	2.3	
f_s DW	(ksi)	4.1	
f_s 1.3(LL+IM)	(ksi)	24.5	
f_s (Service II)	(ksi)	46.7	
** f_s (Total)(Strength I)	(ksi)	---	
V_f	(k)	25.1	

* Compact sections
** Non-Compact and slender sections

INTERIOR GIRDER REACTION TABLE			
		Abut.	
R_{DC1}	(k)	36.3	
R_{DC2}	(k)	6.5	
R_{DW}	(k)	11.6	
R_{LL+IM}	(k)	88.7	
R_{Total}	(k)	143.1	

I_s, S_s: Non-composite moment of inertia and section modulus of the steel section used for computing f_s (Total-Strength I, and Service II) due to non-composite dead loads ($in.^4$ and $in.^3$).
$I_c(n)$, $S_c(n)$: Composite moment of inertia and section modulus of the steel and deck based upon the modular ratio, "n", used for computing f_s (Total-Strength I, and Service II) due to short-term composite live loads ($in.^4$ and $in.^3$).
$I_c(3n)$, $S_c(3n)$: Composite moment of inertia and section modulus of the steel and deck based upon 3 times the modular ratio, "3n", used for computing f_s (Total-Strength I, and Service II) due to long-term composite (superimposed) dead loads ($in.^4$ and $in.^3$).
Z: Plastic Section Modulus of the steel section in non-composite areas. Omit line in Moment Table if not used in design calculations ($in.^3$).
DC1: Un-factored non-composite dead load (kips/ft.).
M_{DC1}: Un-factored moment due to non-composite dead load (kip-ft.).
DC2: Un-factored long-term composite (superimposed excluding future wearing surface) dead load (kips/ft.).
M_{DC2}: Un-factored moment due to long-term composite (superimposed excluding future wearing surface) dead load (kip-ft.).
DW: Un-factored long-term composite (superimposed future wearing surface only) dead load (kips/ft.).
M_{DW}: Un-factored moment due to long-term composite (superimposed future wearing surface only) dead load (kip-ft.).
M_{LL+IM}: Un-factored live load moment plus dynamic load allowance (impact) (kip-ft.).
M_u (Strength I): Factored design moment (kip-ft.).
$1.25\ (M_{DC1} + M_{DC2}) + 1.5\ M_{DW} + 1.75\ M_{LL+IM}$
$\phi_f M_n$: Compact composite positive moment capacity computed according to Article 6.10.7.1 (kip-ft.).
$\phi_f M_{nc}$: Compact non-composite negative moment capacity computed according to Article A6.1.1 (kip-ft.).
f_s (Service II): Sum of stresses as computed from the moments below (ksi).
$M_{DC1} + M_{DC2} + M_{DW} + 1.3\ M_{LL+IM}$
f_s (Total)(Strength I): Sum of stresses as computed from the moments below on non-compact section (ksi).
$1.25\ (M_{DC1} + M_{DC2}) + 1.5\ M_{DW} + 1.75\ M_{LL+IM}$
V_f: Maximum factored shear range in composite portion of span computed according to Article 6.10.10.

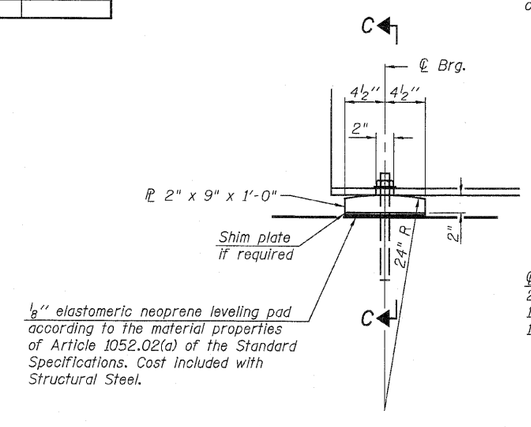

ELEVATION AT ABUTMENT

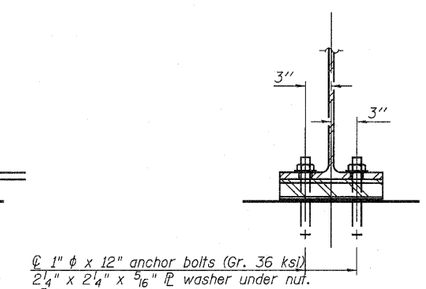

SECTION C-C

FIXED BEARING

Notes:
All structural steel shall be AASHTO M 270 Grade 50W.
Load carrying components designated "NTR" shall conform to the Supplemental Requirements for Notch Toughness, Zone 2.
All cross frames or diaphragms shall be installed as steel is erected and secured with erection pins and bolts except as otherwise noted.
For STAGE II CONSTRUCTION, diaphragms between Beams 3 & 4 shall be installed with bolts at both beams only finger-tight and with slots positioned to allow maximum differential deflection during the deck pour. Bolts shall be fully tightened as soon as possible after deck pour to minimize differential deflections due to traffic.

Johnson, Depp & Quisenberry
CONSULTING ENGINEERS
Springfield, Illinois

DESIGNED:	JDQ	DRAWN:	SJS
CHECKED:	DCD	CHECKED:	DCD

STRUCTURAL STEEL & FRAMING PLAN
STRUCTURE NO. 031-0044

SHEET 14 OF 20	F.A.P. RTE.	SECTION	COUNTY	TOTAL SHEETS	SHEET NO.
	10	3B-1	GREENE	59	39
	STA. 222+94.00		CONTRACT NO. 76C15		
	FED. ROAD DIST. NO.	ILLINOIS	FED. AID PROJECT		

FILE: J:\JOB\00179 IL-DBV-7 IL 26 BRDF CP68K-FINAL\031044-TB3S-04-STRUCTSTEEL.dgn USER: DCD DATE: 05/07/2010 16:28:20